GROUP 13A

MULTIPORT FUEL INJECTION (MFI)

CONTENTS

TECHNICAL INFORMATION. 13A-3

GENERAL DESCRIPTION. 13A-9

MULTIPORT FUEL INJECTION (MFI) DIAGNOSIS 13A-12

- TROUBLESHOOTING STRATEGY 13A-12
- DIAGNOSTIC FUNCTION 13A-12
- FAIL-SAFE FUNCTION REFERENCE TABLE. 13A-40
- DIAGNOSTIC TROUBLE CODE CHART. . 13A-41
- SYMPTOM CHART. 13A-44
- DIAGNOSTIC TROUBLE CODE PROCEDURES. 13A-47
- SYMPTOM PROCEDURES 13A-690
- DATA LIST REFERENCE TABLE 13A-823
- ACTUATOR TEST REFERENCE TABLE. . 13A-837
- CHECK AT THE ENGINE CONTROL MODULE (ECM) 13A-839
- INSPECTION PROCEDURE USING AN OSCILLOSCOPE 13A-844

SPECIAL TOOLS. 13A-855

ON-VEHICLE SERVICE 13A-857

- COMPONENT LOCATION 13A-857
- THROTTLE BODY (THROTTLE VALVE AREA) CLEANING. . . 13A-862
- THROTTLE POSITION SENSOR ADJUSTMENT 13A-862
- BASIC IDLE SPEED ADJUSTMENT 13A-864
- FUEL PRESSURE TEST 13A-865
- FUEL PUMP CONNECTOR DISCONNECTION (HOW TO REDUCE PRESSURIZED FUEL LINES) 13A-868
- FUEL PUMP OPERATION CHECK 13A-868
- MULTIPORT FUEL INJECTION (MFI) RELAY CONTINUITY CHECK 13A-870
- FUEL PUMP RELAY CONTINUITY CHECK 13A-870
- FUEL PUMP RESISTOR CHECK. 13A-871
- INTAKE AIR TEMPERATURE SENSOR CHECK 13A-871
- ENGINE COOLANT TEMPERATURE SENSOR CHECK 13A-872
- THROTTLE POSITION SENSOR CHECK 13A-873

Continued on next page

HEATED OXYGEN SENSOR CHECK 13A-874
CLUTCH PEDAL POSITION SWITCH CHECK 13A-876
INJECTOR CHECK. 13A-876
INJECTOR RESISTOR CHECK 13A-877
IDLE AIR CONTROL MOTOR (STEPPER MOTOR) CHECK. 13A-877
OIL FEEDER CONTROL VALVE CHECK . 13A-879
FUEL PRESSURE SOLENOID CHECK. . . 13A-879
EVAPORATIVE EMISSION PURGE SOLENOID CHECK 13A-880
EGR VACUUM REGULATOR SOLENOID VALVE CHECK 13A-880
EVAPORATVE EMISSION VENTILATION SOLENOID CHECK 13A-880
TURBOCHARGER WASTEGATE SOLENOID CHECK 13A-880

INJECTOR 13A-881
REMOVAL AND INSTALLATION 13A-881

THROTTLE BODY ASSEMBLY 13A-883
REMOVAL AND INSTALLATION 13A-883
DISASSEMBLY AND ASSEMBLY 13A-884

ENGINE CONTROL RESISTOR, RELAY 13A-886
REMOVAL AND INSTALLATION 13A-886

ENGINE CONTROL MODULE (ECM) 13A-887
REMOVAL AND INSTALLATION 13A-887

SPECIFICATIONS 13A-888
FASTENER TIGHTENING SPECIFICATIONS. 13A-888
GENERAL SPECIFICATIONS 13A-888
SERVICE SPECIFICATIONS 13A-889
SEALANT AND ADHESIVE 13A-890

TECHNICAL INFORMATION

M1131053300033

4G63 engine used in LANCER EVOLUTION IX adopts variable valve timing control (MIVEC). This system optimally controls the intake valve timing in accordance with the operation conditions of the engine, and improves the idling stability and the fuel economy as well as increases the power output and torque in all operating ranges.

SENSOR

INTAKE CAMSHAFT POSITION SENSOR

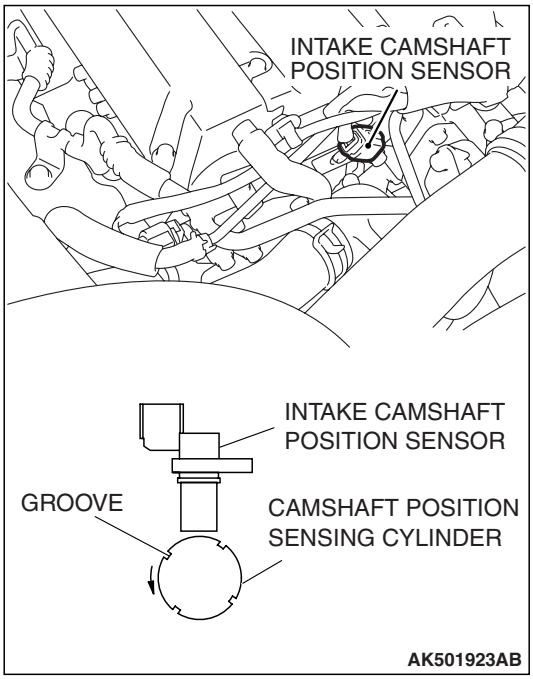

The intake camshaft position sensor which is a Hall element type is mounted on the cylinder head.
This sensor detects the actual position of the intake camshaft by using the camshaft position sensing cylinder and converts it into the pulse signal.
The ECM affects the feedback control of the oil feeder control valve by using this pulse signal.

ACTUATOR

OIL FEEDER CONTROL VALVE

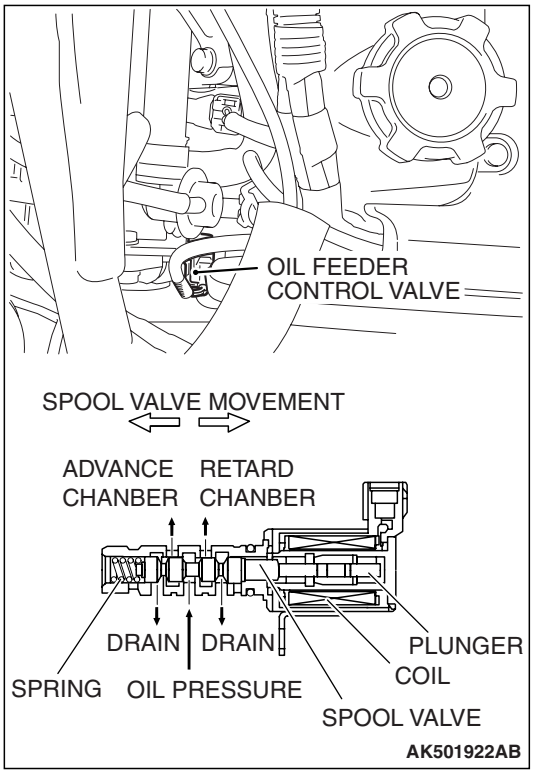

The oil feeder control valve, which is a solenoid valve that operates under the duty cycle control, is mounted on the cylinder head. The duty cycle signals from the ECM make the spool valve in the oil feeder control valve move in order to control the hydraulic pressure in the V.V.T. (Variable Valve Timing) sprocket (intake camshaft sprocket).
The movement of the spool valve makes the engine oil from the cylinder block supplied to the advance chamber or the retard chamber at the V.V.T. sprocket, thus continuously the phase of the intake camshaft is changed.
The ECM controls the oil feeder control valve in accordance with the signals provided by the crankshaft position sensor and the volume airflow sensor.

MIVEC (MITSUBISHI INNOVATIVE VALVE TIMING ELECTRONIC CONTROL SYSTEM)

The intake camshaft sprocket (V.V.T. sprocket) and the camshaft are designed to slide, and the system regulates the volume of oil that is supplied to the oil chambers (for timing advance and retard), which are provided in the camshaft. Thus, the system varied the valve timing by controlling the phase angle (staggered angle) between the V.V.T. sprocket and the camshaft.

The phase angle between the V.V.T. sprocket and the camshaft is controlled by controlling the duty cycle of the current that is applied to the oil feeder control valve, which is provided in the cylinder head.

SYSTEM OPERATION

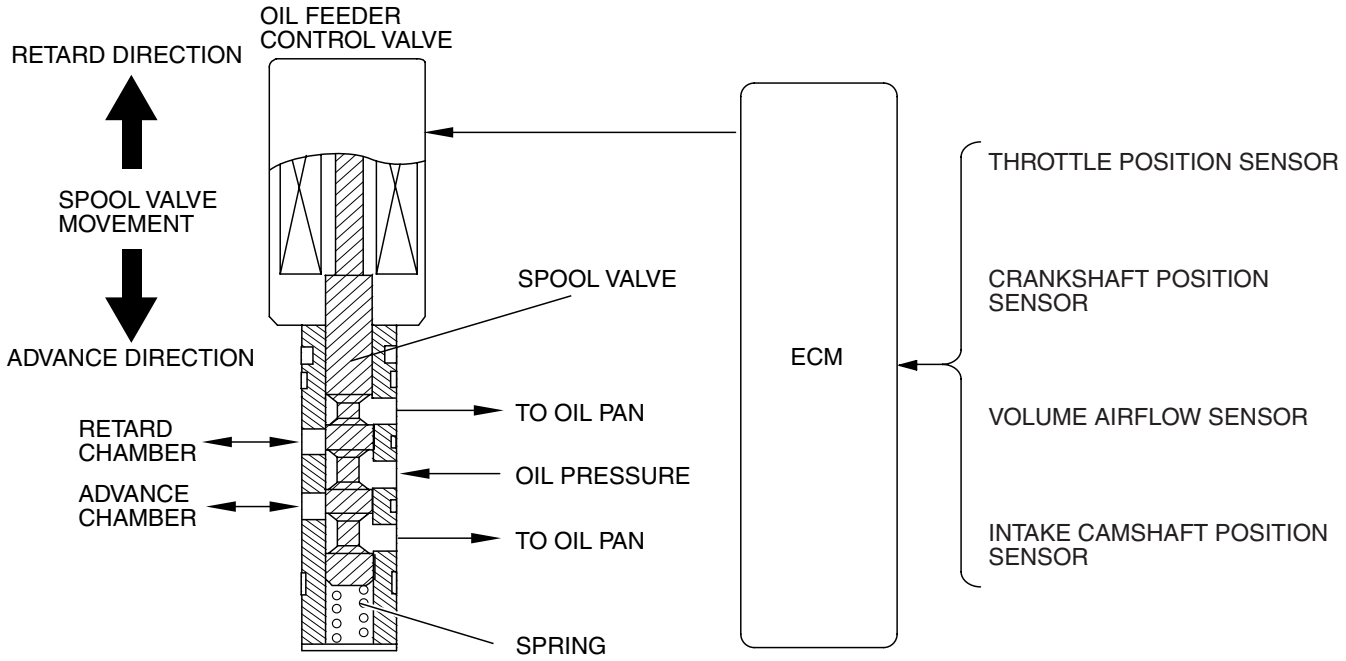

AK501903AC

The ECM assesses the driving conditions by detecting the signals provided by various sensors, and sends duty cycle signals to the oil feeder control valve in accordance with the driving conditions, in order to control the position of the spool valve.

In the oil feeder control valve, the oil pressure is applied to the retard chamber or advance chamber, in order to continuously vary the phase of the intake camshaft.

When the engine is stopped, the ECM turns OFF the duty cycle signal, and applies a constant oil pressure to the retard chamber in order to hold the spool valve in the most retarded position.

The ECM detects the signal from the each sensor and calculates the optimized valve timing according to the operation, and then controls the oil feeder control valve.

In addition, the ECM detects the actual valve timing through the signal from the intake camshaft position senor and carries out the feedback control being closer the target valve timing.

Timing Advance

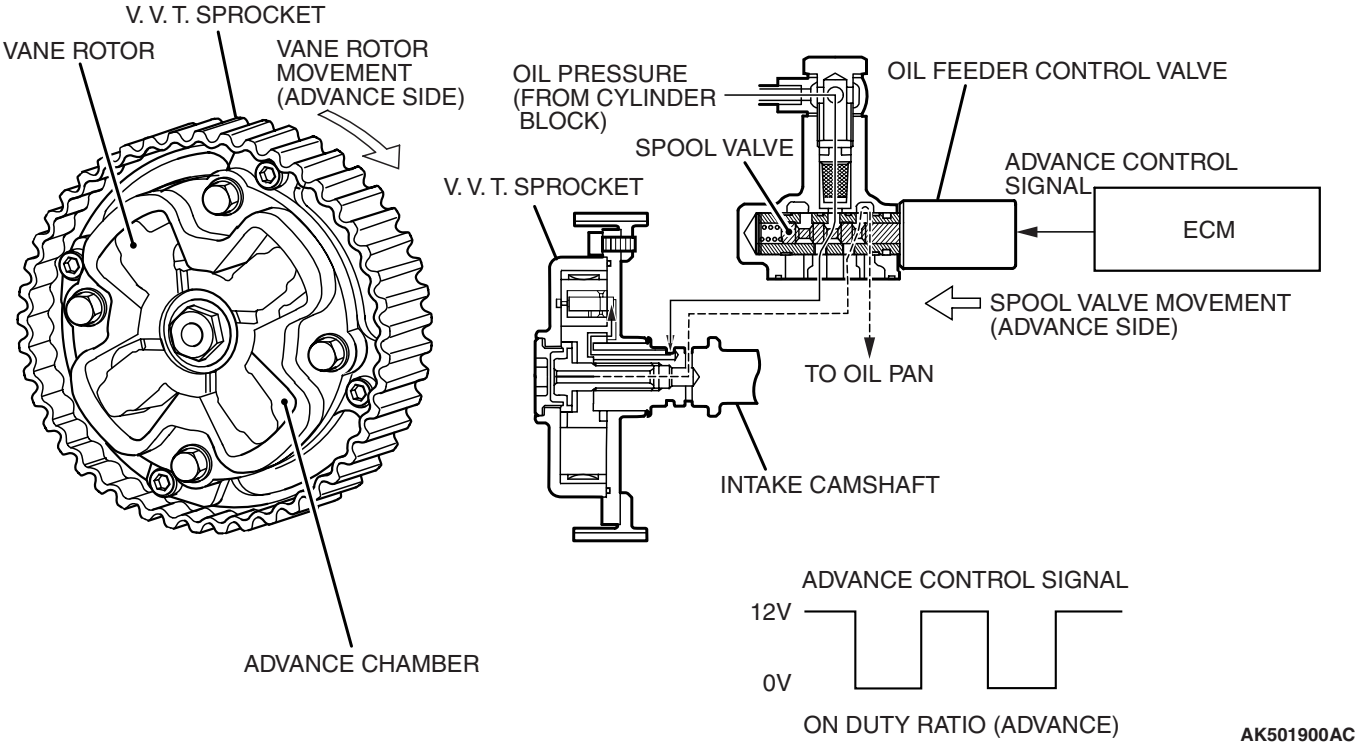

- The spool valve in the oil feeder control valve moves towards timing advance in accordance with the timing advance control signal from the ECM.
- The oil pressure from the cylinder block enters the advance chamber in the V.V.T. sprocket, and the vane rotor moves towards timing advance, thus causing the intake camshaft (which is coupled to the vane rotor) to advance.

Timing Retard

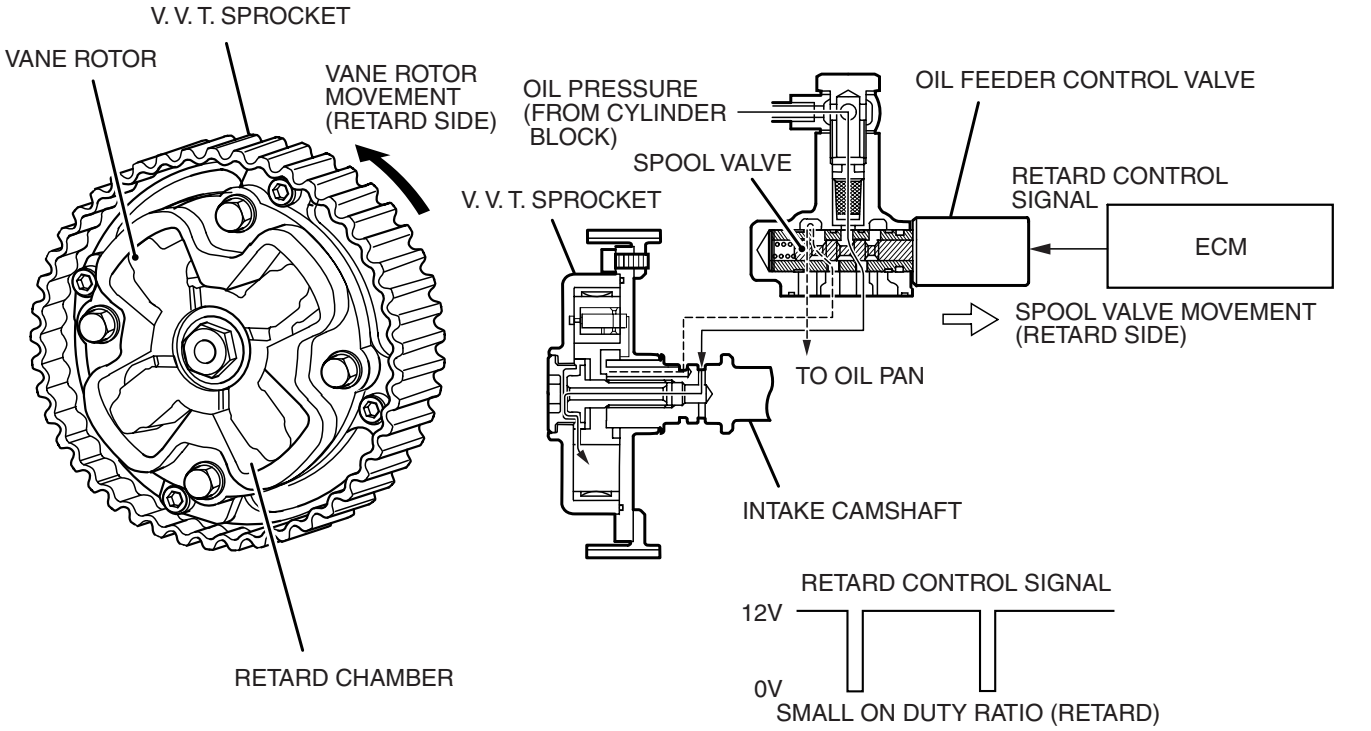

- The spool valve in the oil feeder control valve moves towards timing retard in accordance with the timing advance control signal from the ECM.
- The oil pressure from the cylinder block enters the retard chamber in the V.V.T. sprocket, and the vane rotor moves towards timing retard, thus causing the intake camshaft (which is coupled to the vane rotor) to retard.

Holding

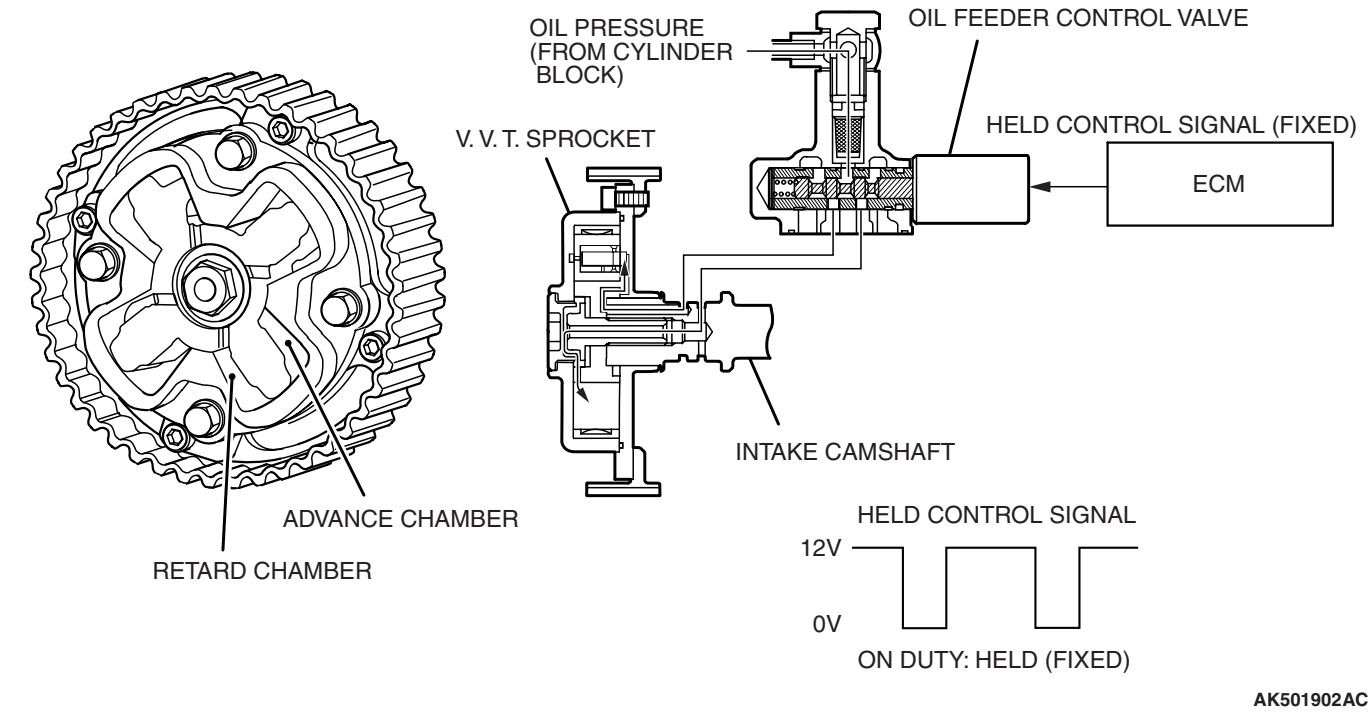

- When the actual phase angle reaches the target phase angle, the advance chamber and the retard chamber hold their oil pressure in order to hold the phase angle of the intake camshaft.

Conceptual Diagram of Operation

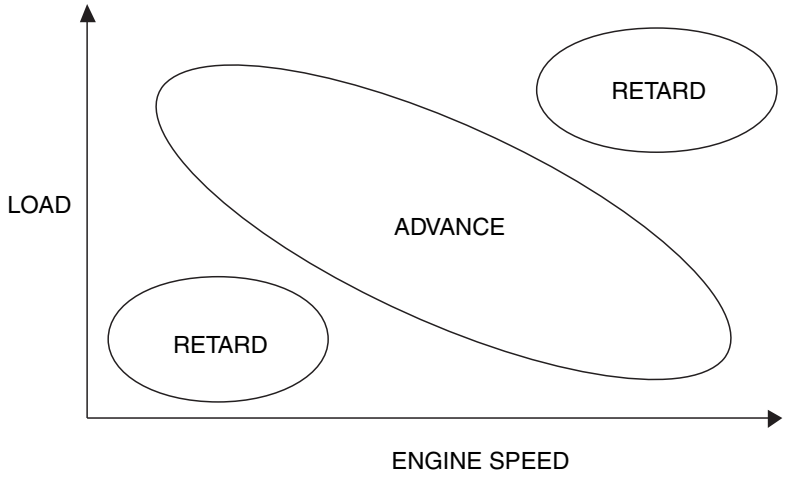

AK500004AE

Driving condition	Valve timing	Operation	Effect
Idling	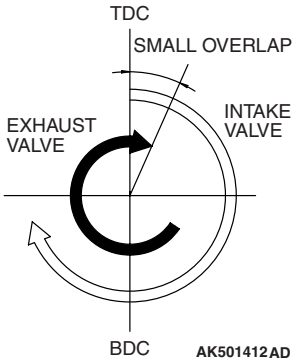	The valve overlap is decreased to minimize the amount of exhaust gas that flows back into the intake port.	Stabilizes idle speed
Low to medium speed	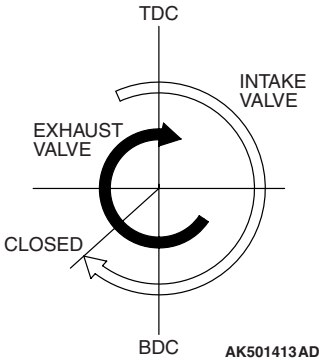	The timing to close the intake valve is accelerated to minimize the amount of intake air that flows back into the intake port. This improves volumetric efficiency and increases low to medium speed torque.	Improves low to medium speed torque
High speed	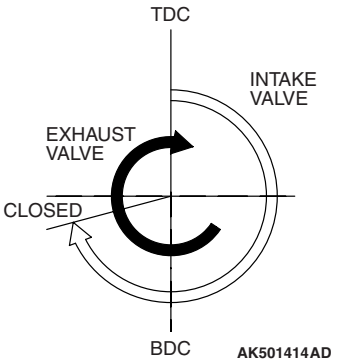	The timing to close the intake valve is retarded in accordance with the engine speed, thus controlling the valve timing to suit the inertial force of the intake air and improving volumetric efficiency.	Improves output

GENERAL DESCRIPTION

M1131000102451

The Multiport Fuel Injection System consists of sensors, actuators and the engine control module (ECM). The sensors detect the engine condition. The module controls the system based on signals from these sensors. The actuators work under the control of the ECM. The ECM carries out activities such as fuel injection control, idle air control, and ignition timing control. In addition, the ECM is equipped with several diagnostic test modes which simplify troubleshooting when a problem develops.

FUEL INJECTION CONTROL

The ECM controls injection drive times and injector timing to supply the optimum air/fuel mixture to the engine according to the continually-changing engine operation conditions. A single injector is mounted at the intake port of each cylinder. The fuel pump supplies pressurized fuel from the fuel tank to the fuel injectors. The fuel pressure regulator controls the fuel pressure. Thus, the regulated fuel is distributed to each injector. Fuel is normally injected for each cylinder every two rotations of the crankshaft. The firing order is 1 - 3 - 4 - 2. Each cylinder has a dedicated fuel injector. This is called "multiport". The

ECM provides a richer air/fuel mixture by carrying out "open-loop" control when the engine is cold or running under high load conditions. Thus, engine performance is maintained. In addition, when the engine is under normal operating temperature after warming-up, the ECM controls the air/fuel mixture according to the heated oxygen sensor signal. This control is a "closed-loop" control. The closed-loop control achieves the theoretical air/fuel mixture ratio where the catalytic converter can obtain the maximum cleaning performance.

IDLE AIR CONTROL

The engine control module controls the amount of air that bypasses the throttle valve according to changes in idling conditions and engine load during idling. Thus, idle speed is kept at an optimum speed. The ECM drives the idle air control (IAC) motor according to engine coolant temperature, A/C, and other electrical load. Thus, idle speed is kept at an optimum speed. In addition, when the A/C switch is turned off and on while the engine is idling, the IAC motor adjusts the throttle valve bypass air amount. Thus, idle speed is maintained at constant speed regardless of various engine load conditions.

IGNITION TIMING CONTROL

The ignition power transistor located in the ignition primary circuit turns on and off to control primary current flow to the ignition coil. This maintains ignition timing at an optimum level regardless of various engine operating conditions. The ECM determines the ignition timing according to engine speed, intake air volume, engine coolant temperature, and atmospheric pressure.

DIAGNOSTIC TEST MODE

- When a fault is detected in any of the sensors or actuators related to emission control, the Malfunction Indicator Lamp (SERVICE ENGINE SOON) illuminates to warn the driver.
- When a fault is detected in one of the sensors or actuators, a diagnostic trouble code corresponding to the fault is stored in the ECM.
- The RAM data inside the ECM that is related to the sensors and actuators can be read with the scan tool. In addition, the actuators can be controlled by the scan tool MB991958 (M.U.T.-III sub assembly) under certain circumstances.

OTHER CONTROL FUNCTIONS

- Fuel Pump Control
  Turns the fuel pump relay ON so that current is supplied to the fuel pump while the engine is cranking or running.
- A/C Compressor Clutch Relay Control
  Turns the compressor clutch of the A/C ON and OFF.
- Fan Motor Control
  The radiator fan and condenser fan speeds are controlled in response to the engine coolant temperature and vehicle speed.
- Fuel Pressure Control
  Supplies current to fuel pressure solenoid coil to raise the fuel pressure so that the fuel does not vaporize when the engine is started while it is warm.
- Intake Charge Pressure Control
  Control the intake charge pressure by controlling the duty of the turbocharger turbocharger wastegate solenoid.
- Generator Output Current Control
  Prevents generator output current from increasing suddenly and idle speed from dropping at times such as when the headlights are turned on.
- Evaporative Emission Purge Control
  (Refer to GROUP 17, Emission Control System – Evaporative Emission System –General Information P.17-12.)
- EGR Control
  (Refer to GROUP 17, Emission Control System – Exhaust Gas Recirculation (EGR) System –General Information P.17-16.)

MULTIPORT FUEL INJECTION (MFI) SYSTEM DIAGRAM

SENSE	DECIDE	ACT
★1 HEATED OXYGEN SENSOR (FRONT) ★2 VOLUME AIRFLOW SENSOR ★3 INTAKE AIR TEMPERATURE SENSOR ★4 THROTTLE POSITION SENSOR ★5 INTAKE CAMSHAFT POSITION SENSOR ★6 EXHAUST CAMSHAFT POSITION SENSOR ★7 CRANKSHAFT POSITION SENSOR ★8 BAROMETRIC PRESSURE SENSOR ★9 ENGINE COOLANT TEMPERATURE SENSOR ★10 KNOCK SENSOR ★11 HEATED OXYGEN SENSOR (REAR) ★12 MANIFOLD ABSOLUTE PRESSURE SENSOR ★13 FUEL TANK DIFFERENTIAL PRESSURE SENSOR ★14 FUEL TEMPERATURE SENSOR ★15 FUEL LEVEL SENSOR ● POWER SUPPLY ● VEHICLE SPEED SENSOR ● A/C SWITCH ● POWER STEERING PRESSURE SWITCH ● CLUTCH SWITCH ● IGNITION SWITCH - ST	⇨ ECM ⇨	◆1 INJECTOR ◆2 EVAPORATIVE EMISSION PURGE SOLENOID ◆3 IDLE AIR CONTROL MOTOR ◆4 EGR SOLENOID ◆5 EVAPORATIVE EMISSION VENTILATION SOLENOID ◆6 FUEL PRESSURE SOLENOID ◆7 TURBO CHARGER WASTEGATE SOLENOID ◆8 OIL FEEDER CONTROL VALVE ● FUEL PUMP RELAY 1, 2, 3 ● MULTIPORT FUEL INJECTION (MFI) RELAY ● A/C COMPRESSER CLUTCH RELAY ● MALFUNCTION INDICATOR LAMP (SERVICE ENGINE SOON) ● DIAGNOSTIC OUTPUT ● IGNITION COIL, IGNITION POWER TRANSISTER

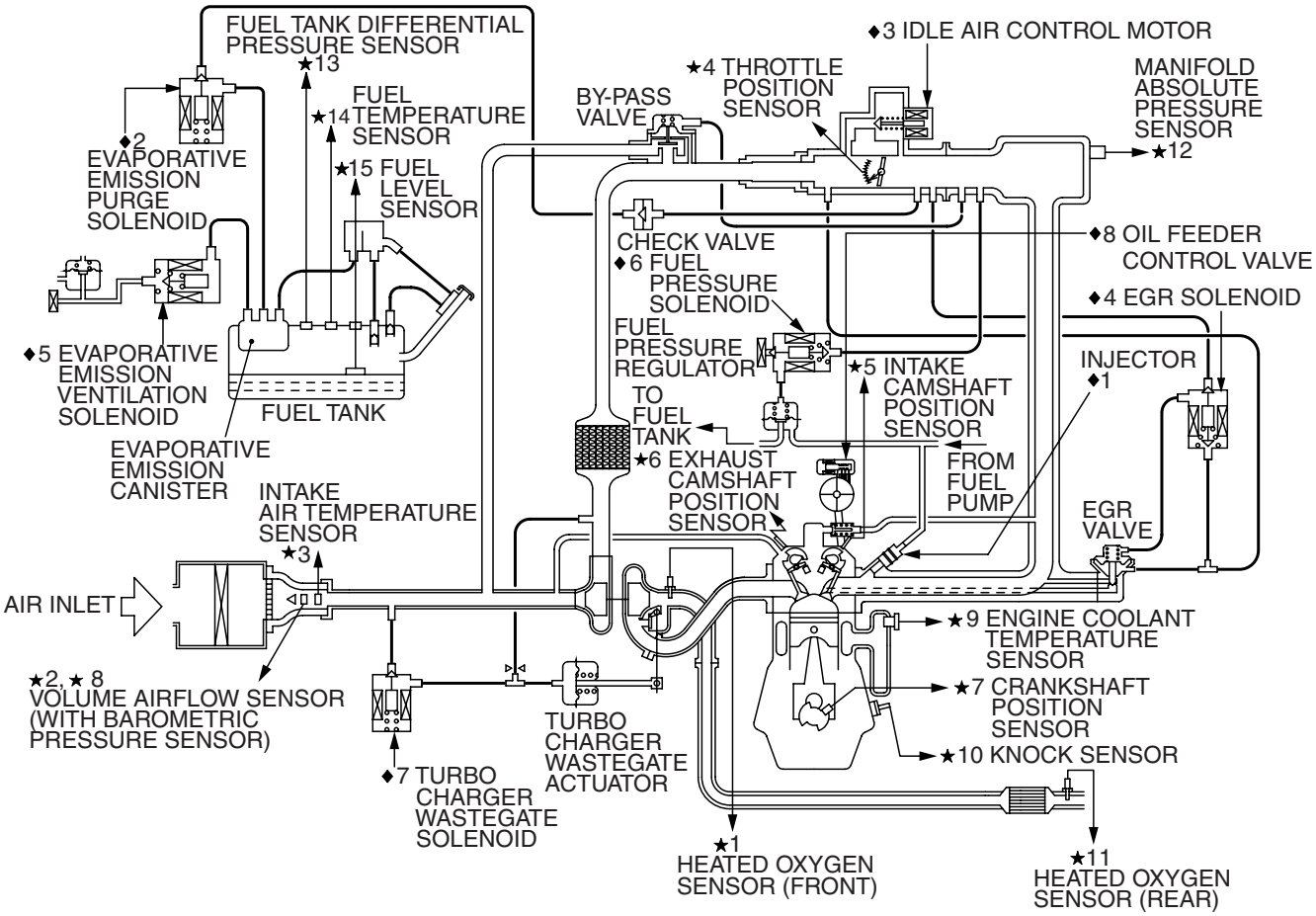

NOTE: For the vacuum hose routing, refer to GROUP 17, Vacuum Hoses *P.17-8.*

MULTIPORT FUEL INJECTION (MFI) DIAGNOSIS

TROUBLESHOOTING STRATEGY

M1131150001271

Use these steps to plan your diagnostic strategy. If you follow them carefully, you will be sure to have exhausted most of the possible ways to find an MFI fault.

1. Gather as much information as possible about the complaint from the customer.
2. Verify that the condition described by the customer exists.
3. Check the vehicle for any MFI Diagnostic Trouble Code (DTC).
4. If you cannot verify the condition and there are no DTCs, the malfunction is intermittent. For information on how to cope with intermittent malfunctions, refer to GROUP 00, How to Use Troubleshooting/Inspection Service Points –How to Cope with Intermittent Malfunctions P.00-13.
5. If you can verify the condition but there are no DTCs, or the system cannot communicate with the scan tool, refer to the trouble symptom classification table.
6. If there is a DTC, record the number of the code, then erase the code from the memory using the scan tool.

NOTE: If a DTC is erased, its "freeze frame" data will be also erased and the system readiness test status will be reset. If necessary, store the "freeze frame" data before erasing the DTC.

7. Reconfirm the malfunction symptom and carry out a test drive with the drive cycle pattern.
8. If DTC is set again, carry out an inspection with appropriate diagnostic trouble code procedures.
9. If DTC is not set again, the malfunction is intermittent. For information on how to cope with intermittent malfunctions, refer to GROUP 00, How to Use Troubleshooting/Inspection Service Points –How to Cope with Intermittent Malfunctions P.00-13.
10. After repairs are completed, conduct a road test duplicating the complaint set conditions to confirm the malfunction has been corrected.

DIAGNOSTIC FUNCTION

M1131155501549

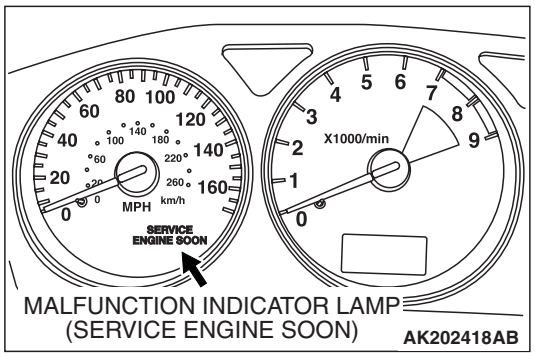

MALFUNCTION INDICATOR LAMP (SERVICE ENGINE SOON)

MALFUNCTION INDICATOR LAMP (SERVICE ENGINE SOON)

Among the on-board diagnostic items, a Malfunction Indicator Lamp (SERVICE ENGINE SOON) illuminates to notify the driver of an emission control malfunction.
However, when an irregular signal returns to normal and the engine control module (ECM) judges that it has returned to normal, the Malfunction Indicator Lamp (SERVICE ENGINE SOON) is switched off.
Moreover, when the ignition switch is turned off, the lamp is switched off. Even if the ignition switch is turned on again, the lamp does not illuminate until the malfunction is detected.
Immediately after the ignition switch is turned on, the Malfunction Indicator Lamp (SERVICE ENGINE SOON) is lit for 20 seconds to indicate that the Malfunction Indicator Lamp (SERVICE ENGINE SOON) operates normally.

Items Indicated by the Malfunction Indicator Lamp (SERVICE ENGINE SOON)

DTC NO.	ITEMS
–	Engine control module (ECM) malfunction
P0011	Variable valve timing system error
P0031	Heated oxygen sensor heater control circuit Low (sensor 1)
P0032	Heated oxygen sensor heater control circuit High (sensor 1)
P0037	Heated oxygen sensor heater control circuit Low (sensor 2)
P0038	Heated oxygen sensor heater control circuit High (sensor 2)
P0069	Abnormal correlation between manifold absolute pressure sensor and barometric pressure sensor
P0090	Fuel pressure solenoid circuit
P0101*	Volume airflow circuit range/performance problem
P0102*	Volume airflow circuit low input
P0106	Manifold absolute pressure circuit range/performance problem
P0107	Manifold absolute pressure circuit low input
P0108	Manifold absolute pressure circuit high input
P0111*	Intake air temperature circuit range/performance problem
P0112*	Intake air temperature circuit low input
P0113*	Intake air temperature circuit high input
P0116*	Engine coolant temperature circuit range/performance problem
P0117*	Engine coolant temperature circuit low input
P0118*	Engine coolant temperature circuit high input
P0121*	Throttle position sensor circuit range/performance problem
P0122*	Throttle position sensor circuit low input
P0123*	Throttle position sensor circuit high input
P0125*	Insufficient coolant temperature for closed loop fuel control
P0128	Coolant thermostat (Coolant temperature below thermostat regulating temperature)
P0130	Heated oxygen sensor circuit (sensor 1)
P0131	Heated oxygen sensor circuit low voltage (sensor 1)
P0132	Heated oxygen sensor circuit high voltage (sensor 1)
P0133	Heated oxygen sensor circuit slow response (sensor 1)
P0134*	Heated oxygen sensor circuit no activity detected (sensor 1)
P0136	Heated oxygen sensor circuit (sensor 2)
P0137	Heated oxygen sensor circuit low voltage (sensor 2)
P0138	Heated oxygen sensor circuit high voltage (sensor 2)
P0139	Heated oxygen sensor circuit slow response (sensor 2)
P0140	Heated oxygen sensor circuit no activity detected (sensor 2)
P0171	System too lean
P0172	System too rich
P0181	Fuel tank temperature sensor circuit range/performance
P0182	Fuel tank temperature sensor circuit low input

DTC NO.	ITEMS
P0183	Fuel tank temperature sensor circuit high input
P0201	Injector circuit-cylinder 1
P0202	Injector circuit-cylinder 2
P0203	Injector circuit-cylinder 3
P0204	Injector circuit-cylinder 4
P0234	Turbocharger wastegate system malfunction
P0243	Turbocharger wastegate solenoid circuit
P0300	Random/multiple cylinder misfire detected
P0301	Cylinder 1 misfire detected
P0302	Cylinder 2 misfire detected
P0303	Cylinder 3 misfire detected
P0304	Cylinder 4 misfire detected
P0335*	Crankshaft position sensor circuit
P0340*	Exhaust camshaft position sensor circuit
P0365	Intake camshaft position sensor circuit
P0401	Exhaust gas recirculation flow insufficient detected
P0403	Exhaust gas recirculation control circuit
P0420	Catalyst efficiency below threshold
P0441	Evaporative emission control system incorrect purge flow
P0442	Evaporative emission control system leak detected (Small leak)
P0443	Evaporative emission control system purge control valve circuit
P0446	Evaporative emission control system vent control circuit
P0450	Evaporative emission control system pressure sensor malfunction
P0451	Evaporative emission control system pressure sensor range/performance
P0452	Evaporative emission control system pressure sensor low input
P0453	Evaporative emission control system pressure sensor high input
P0455	Evaporative emission control system leak detected (Gross leak)
P0456	Evaporative emission control system leak detected (Very small leak)
P0461	Fuel level sensor (main) circuit range/performance
P0462	Fuel level sensor circuit low input
P0463	Fuel level sensor circuit high input
P0500*	Vehicle speed sensor
P0506	Idle control system RPM lower than expected
P0507	Idle control system RPM higher than expected
P0551	Power steering pressure sensor circuit range/performance
P0554	Power steering pressure sensor circuit intermittent
P0603*	EEPROM malfunction
P0630*	VIN malfunction
P1021	Oil feeder control valve circuit
P1530	A/C1 switch circuit intermittent

DTC NO.	ITEMS
P1603*	Battery backup circuit malfunction
P2066	Fuel level sensor (sub) circuit range/performance
P2195	Inactive heated oxygen sensor (sensor 1)
P2228*	Barometric pressure circuit low input
P2229*	Barometric pressure circuit high input

NOTE: If the Malfunction Indicator Lamp (SERVICE ENGINE SOON) illuminates because of a malfunction of the engine control module (ECM), communication between the scan tool and the ECM is impossible. In this case, the diagnostic trouble code (DTC) cannot be read.

NOTE: After the ECM has detected a malfunction, the Malfunction Indicator Lamp (SERVICE ENGINE SOON) illuminates when the engine is next turned on and the same malfunction is re-detected. However, for items marked with a "" in the DTC NO column, the Malfunction Indicator Lamp (SERVICE ENGINE SOON) illuminates on the first detection of the malfunction.*

NOTE: After the Malfunction Indicator Lamp (SERVICE ENGINE SOON) illuminates, it will be switched off under the following conditions.

- *When the ECM monitored the power train malfunction three times* it met set condition requirements, it detected no malfunction. *: In this case, "one time" indicates from engine start to stop.*
- *For misfiring or a fuel trim malfunction, when driving conditions (engine speed, engine coolant temperature, etc.) are similar to those when the malfunction was first recorded.*

NOTE: Sensor 1 indicates the sensor mounted at a position closest to the engine, and sensor 2 indicates the sensor mounted at the position second closest to the engine.

HOW TO CONNECT THE SCAN TOOL (M.U.T.-III)

Required Special Tools:

- MB991958: Scan Tool (M.U.T.-III Sub Assembly)
  - MB991824: V.C.I
  - MB991827: USB Cable
  - MB991911: Main Harness B

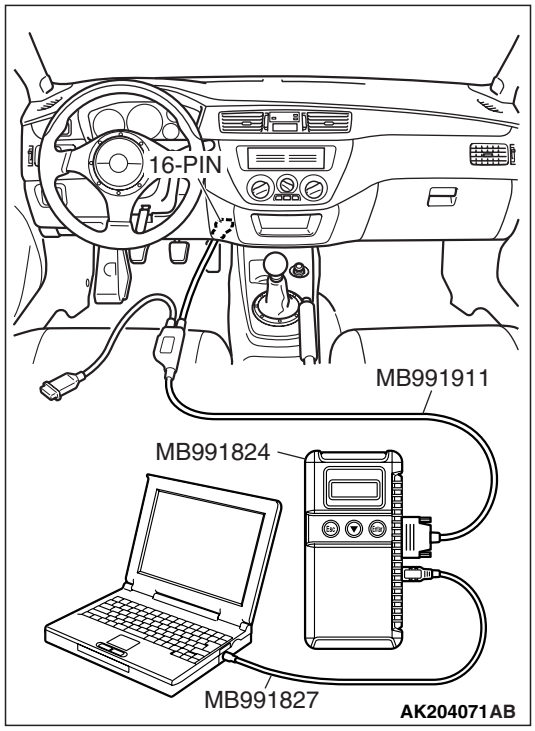

⚠ CAUTION

To prevent damage to scan tool MB991958, always turn the ignition switch to the "LOCK" (OFF) position before connecting or disconnecting scan tool MB991958.

1. Ensure that the ignition switch is at the "LOCK" (OFF) position.
2. Start up the personal computer.
3. Connect special tool MB991827 to special tool MB991824 and the personal computer.
4. Connect special tool MB991911 to special tool MB991824.
5. Connect special tool MB991911 to the data link connector.
6. Turn the power switch of special tool MB991824 to the "ON" position.

   NOTE: When the special tool MB991824 is energized, special tool MB991824 indicator light will be illuminated in a green color.
7. Start the M.U.T.-III system on the personal computer.

   NOTE: Disconnecting the scan tool MB991958 is the reverse of the connecting sequence, making sure that the ignition switch is at the "LOCK" (OFF) position.

HOW TO READ AND ERASE DIAGNOSTIC TROUBLE CODE

Required Special Tools:

- MB991958: Scan Tool (M.U.T.-III Sub Assembly)
  - MB991824: V.C.I.
  - MB991827: USB Cable
  - MB991911: Main Harness B

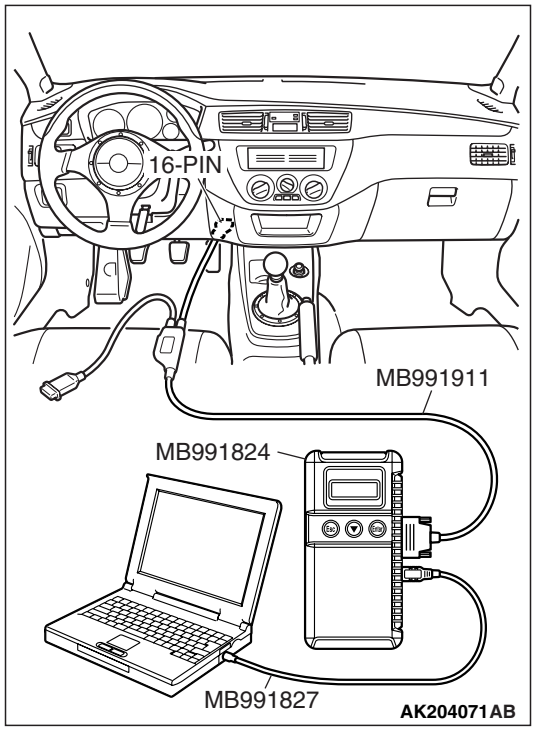

⚠ CAUTION

To prevent damage to scan tool MB991958, always turn the ignition switch to the "LOCK" (OFF) position before connecting or disconnecting scan tool MB991958.

NOTE: If the battery voltage is low, diagnostic trouble codes will not be set. Check the battery if scan tool MB991958 does not display.

1. Connect scan tool MB991958 to the data link connector.
2. Turn the ignition switch to the "ON" position.
3. Select "Interactive Diagnosis" from the start-up screen.
4. Select "System select".
5. Choose "MFI" from the "POWER TRAIN" tab.
6. Select "MITSUBISHI".
7. Select "Diagnostic Trouble Code"
8. If a DTC is set, it is shown.
9. Choose "Erase DTCs" to erase the DTC.

PROVISIONAL DTCs [SCAN TOOL MB991958 OBD-II Test Mode –Results (Mode 7)]

The scan tool will display the Provisional DTCs reported by engine control module (ECM) if the ECM detects some malfunction for "Misfire", "Fuel System" and "Comprehensive" monitoring during a SINGLE Driving Cycle. The intended use of this data is to assist the technician after a vehicle repair, and after clearing diagnostic information, by reporting test result after a SINGLE Driving Cycle. Note that the test results reported by this mode do not necessarily indicate a faulty component/system. If test results indicate a failure after ADDITIONAL (consecutive) driving, then the Malfunction Indicator Lamp (SERVICE ENGINE SOON) will be illuminated and a DTC will set.

MODE 6 REFERENCE TABLE

The engine control module (ECM) monitors the condition of emission control system.

By selecting MODE 6 using scan tool, Test Result and Limit Value (minimum) *1 or (maximum) *2 about the main items of emission control system which ECM monitors can be confirmed. The value at the last monitoring is output by ECM as a test result.

TEST ID	MONITORING ITEM	SIMPLE TECHNICAL DESCRIPTION	INDICATION OF SCAN TOOL	CONVERSION COEFFICIENT IN USING GENERAL SCAN TOOL
01	Catalyst monitor	ECM monitors the deterioration of catalyst by the output frequency ratio between heated oxygen sensor (front) and heated oxygen sensor (rear).	Catalyst Frequency Ratio Test Result and Limit Value (max.)	× 0.0039
03	EGR monitor	ECM monitors the operation of EGR system by the pressure difference of intake manifold between before and after introduction of EGR using the manifold differential pressure sensor.	EGR Monitor Pressure Value Test Result and Limit Value (min.) kPa	× 0.43 kPa
06	Evaporation leak monitor (Small leak)	After ECM vacuumizes the fuel tank and the fuel line and then the specified time is passed, ECM monitors the leak of fuel evaporation gas through the fuel tank differential pressure sensor to check the reduction of vacuum in the fuel tank.	EVAP Leak Mon. 1 mm Pressure Value Test Result and Limit Value (max.) kPa	× 0.032 kPa
07	Evaporation leak monitor (Gross leak)	ECM monitors the leak of fuel evaporation gas by checking whether the pressure can be reduced (the amount of pressure reduction) using the fuel tank differential pressure sensor after sealing the fuel tank and the fuel line.	EVAP Leak Mon. Gross Pressure Value Test Result and Limit Value (min.) kPa	× 0.032 kPa

TEST ID	MONITORING ITEM	SIMPLE TECHNICAL DESCRIPTION	INDICATION OF SCAN TOOL	CONVERSION COEFFICIENT IN USING GENERAL SCAN TOOL
08	Evaporation leak monitor (Very small leak)	After ECM vacuumizes the fuel tank and the fuel line and then the specified time is passed, ECM monitors the leak of fuel evaporation gas through the fuel tank differential pressure sensor to check the reduction of vacuum in the fuel tank.	EVAP Leak Mon. 0.5 mm Pressure Value Test Result and Limit Value (max.) kPa	× 0.032 kPa
09	Heated oxygen sensor (front) monitor (Rich/Lean Switching)	ECM monitors the deteriorated condition of the heated oxygen sensor (front) by checking the lean/rich switching frequency of the heated oxygen sensor (front).	HO2S B1 SENSOR1 Rich/Lean Switching Count Test Result and Limit Value (min.)	× 1 count
0B	Heated oxygen sensor (rear) monitor (Voltage Change)	The engine control unit checks the output voltage of the heated oxygen sensor (rear) in order to monitor whether the heated oxygen sensor (rear) output is stuck.	HO2S B1 SENSOR2 Change in Volt Test Result and Limit Value (min.)	× 19.5 mV

*NOTE: *1: Minimum value: The test fails if test value is less than this value.*

*NOTE: *2: Maximum value: The test fails if test value is greater than this value.*

DIAGNOSTIC BY DIAGNOSTIC TEST MODE II (INCREASED SENSITIVITY)

Required Special Tools:

- MB991958: Scan Tool (M.U.T.-III Sub Assembly)
  - MB991824: V.C.I.
  - MB991827: USB Cable
  - MB991911: Main Harness B

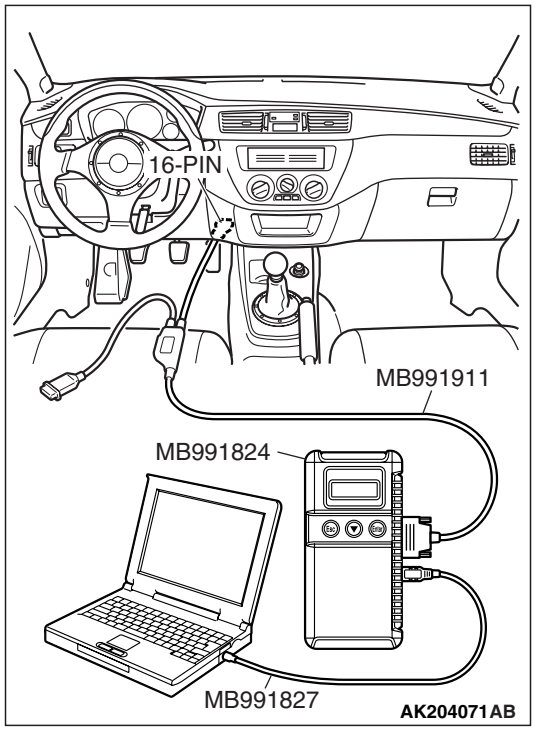

⚠ CAUTION

To prevent damage to scan tool MB991958, always turn the ignition switch to the "LOCK" (OFF) position before connecting or disconnecting scan tool MB991958.

NOTE: When mode II is selected with scan tool MB991958 (M.U.T.-III sub assembly), the Malfunction Indicator Lamp (SERVICE ENGINE SOON) will light when the engine control module (ECM) first detects the trouble (Note that this is only for emission-related trouble). At the same time, the relevant diagnostic trouble codes will be registered. In respect to the comprehensive component electrical faults (opens/shorts), the time for the diagnostic trouble code to be registered after the fault occurrence is four seconds →one second. Therefore, the confirmation of the trouble symptom and the confirmation after completing repairs can be reduced. To return to the normal mode I after mode II has been selected once, the ignition switch must be turned "OFF" once or mode I must be reselected with scan tool MB991958 (M.U.T.-III sub assembly). The diagnostic trouble code, system readiness test status and freeze frame data, etc., will be erased when mode I is returned to, so record these before returning to model.

1. Connect scan tool MB991958 to the data link connector.
2. Turn the ignition switch to the "ON" position.
3. Change the diagnostic test mode of the ECM to DIAGNOSTIC TEST MODE II (INCREASED SENSITIVITY).
4. Road test the vehicle.
5. Read the diagnostic trouble code and repair the malfunctioning part.
6. Turn the ignition switch to the "LOCK" (OFF) position.
7. Disconnect scan tool MB991958 from the data link connector.

INSPECTION USING SCAN TOOL MB991958, DATA LIST AND ACTUATOR TESTING

Required Special Tools:

- MB991958: Scan Tool (M.U.T.-III Sub Assembly)
  - MB991824: V.C.I.
  - MB991827: USB Cable
  - MB991911: Main Harness B

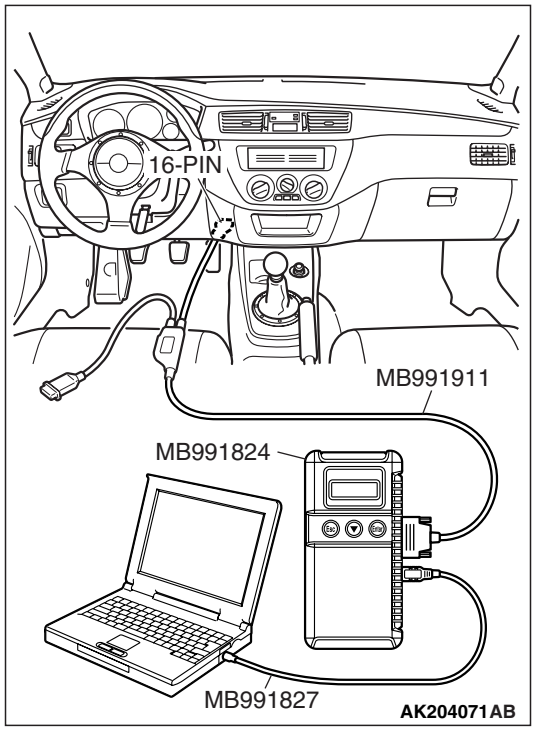

⚠ CAUTION

To prevent damage to scan tool MB991958, always turn the ignition switch to the "LOCK" (OFF) position before connecting or disconnecting scan tool MB991958.

1. Connect scan tool MB991958 to the data link connector.
2. Turn the ignition switch to the "ON" position.
3. Select "Interactive Diagnosis" from the start-up screen.
4. Select "System select".
5. Choose "MFI" from the "POWER TRAIN" tab.
6. Select "MITSUBISHI".
7. Select "Data List" or "Actuator Test".
8. Choose an appropriate item and select the "OK" button.

ON-BOARD DIAGNOSTICS

The engine control module (ECM) monitors the input/output signals (some signals all the time and others under specified conditions) of the ECM. When a malfunction continues for a specified time or longer after the irregular signal is initially monitored, the ECM judges that a malfunction has occurred. After the ECM first detects a malfunction, a diagnostic trouble code is recorded when the engine is restarted and the same malfunction is re-detected. However, for items marked with a "*", a diagnostic trouble code is recorded on the first detection of the malfunction. There are 86 diagnostic items. The diagnostic results can be read out with a scan tool. Since memorization of the diagnostic trouble codes is backed up directly by the battery, the diagnostic results are memorized even if the ignition key is turned off. The diagnostic trouble codes will, however, be erased when the battery terminal or the ECM connector is disconnected. In addition, the diagnostic trouble code can also be erased by turning the ignition switch to ON and sending the diagnostic trouble code erase signal from scan tool to the ECM.

NOTE: If the sensor connector is disconnected with the ignition switch turned on, the diagnostic trouble code is memorized. In this case, send the diagnostic trouble code erase signal to the ECM in order to erase the diagnostic memory. The 86 diagnostic items are all indicated sequentially from the smallest code number. The ECM records the engine operating condition when the diagnostic trouble code is set. This data is called "Freeze-frame" data. This data can be read by using the scan tool, and can then be used in simulation tests for troubleshooting. Data items are as follows:

NOTE: If the ECM detects multiple malfunctions, the ECM stores the data for only the first item that was detected.

However, if the ECM detects a misfire or a fuel system malfunction, the ECM stores the data by giving priority to the misfire or fuel system malfunction, regardless of the order in which the malfunction was detected.

NOTE: As for Diagnostic trouble code P1603, "Freeze frame" data is not memorized.

M.U.T.-III SCAN TOOL DISPLAY	ITEM NO.	DATA ITEM	UNIT or STATE
ECT SENSOR	21	Engine coolant temperature sensor	°C or °F
ENGINE LOAD	87	Calculated load value	%
ENGINE SPEED	22	Crankshaft position sensor	r/min
IAT SENSOR	13	Intake air temperature sensor	°C or °F
IG. TIMING ADV	44	Ignition coils and ignition power transistor	deg
LONG TRIM B1	81	Long-term fuel trim	%
SHORT TRIM B1	82	Short-term fuel trim	%
SYS. STATUS B1	88	Fuel system status	• Open loop • Closed loop • Open loop-drive condition • Open loop-DTC set • Closed loop-O_2 (rear) failed
TP SENSOR	8A	Throttle position sensor	%
VAF SENSOR	12	Volume airflow sensor (mass airflow rate)	gm/s
VSS	24	Vehicle speed sensor	km/h or mph

OBD-II DRIVE CYCLE

All kinds of diagnostic trouble codes (DTCs) can be monitored by carrying out a short drive according to the following 23 drive cycle patterns. In other words, doing such a drive regenerates any kind of trouble which involves illuminating the Malfunction Indicator Lamp (SERVICE ENGINE SOON) and verifies the repair procedure has eliminated the trouble (the Malfunction Indicator Lamp (SERVICE ENGINE SOON) is no longer illuminated).

⚠ CAUTION

Two technicians should always be in the vehicle when carrying out a test drive.

NOTE: Check that the diagnosis trouble code (DTC) is not output before driving the OBD-II drive cycle. Erase the DTC if it has been output.

NOTE: Drive cycle patterns are not established for vehicle speed sensor monitor (DTC P0500), Power steering pressure switch monitor (DTC P0551), and Fuel level sensor monitor (DTC P0461, P2066). Please reference the M.U.T. data list to judge whether these monitor items are normal.

DRIVE CYCLE PATTERN LIST

MONITOR ITEM	DIAGNOSTIC TROUBLE CODE (DTC)	PATTERN
Heated oxygen sensor (front) monitor	P0133	1
Heated oxygen sensor heater monitor	P0031, P0032, P0037, P0038	2
Exhaust gas recirculation (EGR) system monitor	P0401	3
Catalytic converter monitor	P0420	4
Evaporative emission system leak monitor (small leak and gross leak)	P0442, P0455	5
Evaporative purge system monitor	P0441	
Fuel tank pressure sensor monitor	P0450	
Evaporative emission system leak monitor (very small leak)	P0456	6
Airflow sensor monitor	P0101	7
Manifold absolute pressure (MAP) sensor monitor	P0106, P0107	
Throttle position sensor monitor	P0121	
Intake air temperature sensor monitor	P0111	8
Engine coolant temperature sensor monitor	P0116, P0125	9
Thermostat monitor	P0128	10
Air fuel ratio feedback monitor	P0134	11
Heated oxygen sensor monitor	P0130, P0131, P0136, P0137	
Heated oxygen sensor (rear) monitor	P0140	12
Fuel tank temperature sensor monitor	P0181	13
Misfire monitor	P0300, P0301, P0302, P0303, P0304	14
Fuel tank pressure sensor monitor	P0451	15
Waste gate system monitor	P0234	16
Power steering pressure switch monitor	P0554	17
Idle speed control system monitor	P0506, P0507	18
Heated oxygen sensor (rear) monitor	P0139	19
Fuel trim monitor	P0171, P0172	20
Variable valve timing system monitor	P0011	21
Heated oxygen sensor (front) monitor	P2195	22

MONITOR ITEM	DIAGNOSTIC TROUBLE CODE (DTC)	PATTERN
Fuel pressure solenoid monitor	P0090	23
Airflow sensor monitor	P0102	
Manifold absolute pressure (MAP) sensor monitor	P0108	
Intake air temperature sensor monitor	P0112, P0113	
Engine coolant temperature sensor monitor	P0117, P0118	
Throttle position sensor monitor	P0122, P0123	
Heated oxygen sensor monitor	P0132, P0138	
Fuel tank temperature sensor monitor	P0182, P0183	
Injector monitor	P0201, P0202, P0203, P0204	
Waste gate solenoid monitor	P0243	
Crankshaft position sensor monitor	P0335	
Exhaust camshaft position sensor monitor	P0340	
Intake camshaft position sensor monitor	P0365	
Exhaust gas recirculation (EGR) solenoid monitor	P0403	
Evaporative emission purge solenoid monitor	P0443	
Evaporative emission ventilation solenoid monitor	P0446	
Fuel tank pressure sensor monitor	P0452, P0453	
Fuel level sensor monitor	P0462, P0463	
Oil feeder control valve monitor	P1021	
Barometric pressure sensor monitor	P2228, P2229	

PATTERN 1

Drive cycle pattern	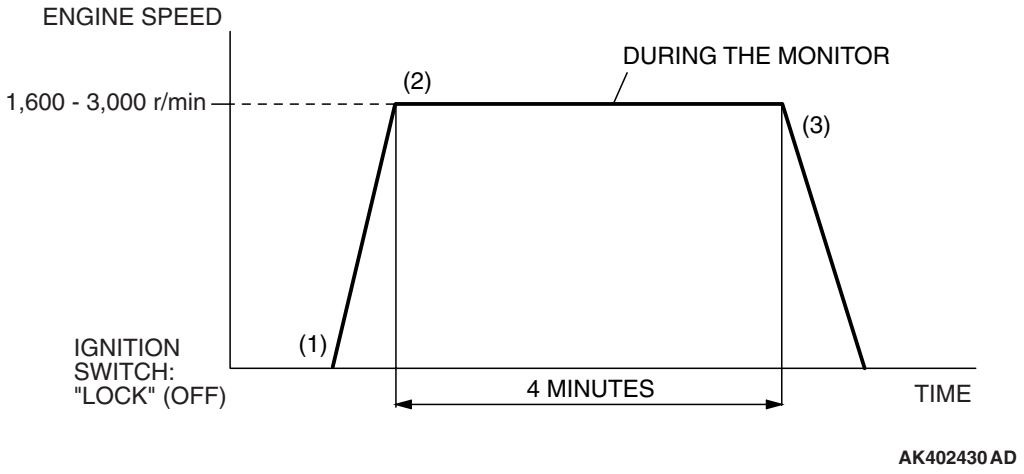
Inspection conditions	• Engine coolant temperature: More than 82° C (180° F) • Intake air temperature: More than –10° C (14° F) • Barometric pressure: More than 76 kPa (22.5 inHg)
Test procedure	1. Start the engine with all the accessories switched OFF. 2. Drive the vehicle for 4 minutes at the following conditions. (During the monitor) *NOTE: When the system is normal, the monitor is completed earlier.* • Vehicle speed: More than 30 km/h (19 mph) • Engine speed: More than 1,600 r/min, less than 3,000 r/min • Engine load: More than 30%, less than 60% • Without rapid accelerator pedal movement 3. Stop the vehicle at the safe place and turn the ignition switch to "LOCK" (OFF) position. 4. Start the engine and do Steps 1 to 3 again. *NOTE: When the vehicle is operating normally and the OBD-II Drive Cycle is carried out, the Readiness Codes will be set as "Complete" on the first drive cycle. The second drive cycle is required to set the Readiness Codes as "Complete" if a fault is detected during the first drive cycle.* 5. Confirm that the diagnostic trouble code (DTC) is not output.

PATTERN 2

Inspection condition	Engine coolant temperature at engine start: More than 20° C (68° F)
Test procedure	1. Start the engine with all the accessories switched OFF. 2. Let the engine idle for 10 seconds. (During the monitor) 3. Turn the ignition switch to the "LOCK" (OFF) position. 4. Start the engine and do Steps 1 to 3 again. *NOTE: When the vehicle is operating normally and the OBD-II Drive Cycle is carried out, the Readiness Codes will be set as "Complete" on the first drive cycle. The second drive cycle is required to set the Readiness Codes as "Complete" if a fault is detected during the first drive cycle.* 5. Confirm that the diagnostic trouble code (DTC) is not output.

PATTERN 3

Drive cycle pattern	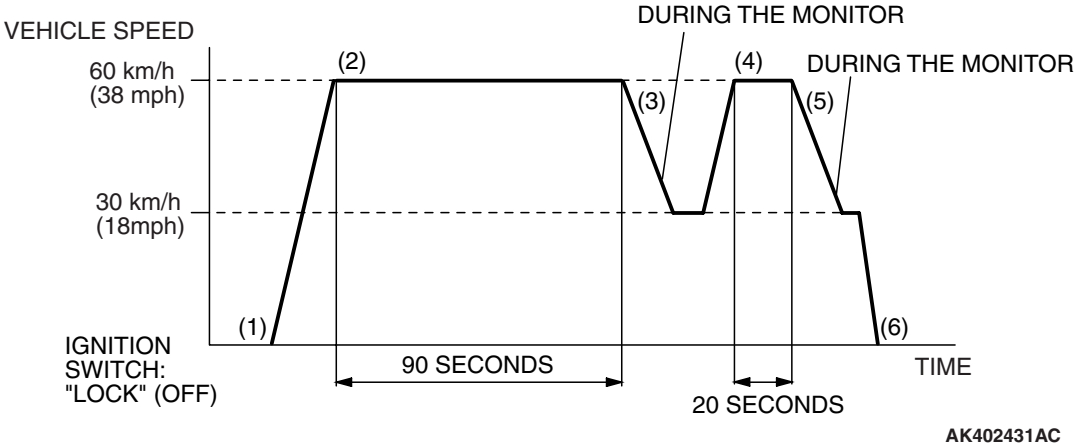
Inspection conditions	• Engine coolant temperature: More than 82° C (180° F) • Intake air temperature: More than 5° C (41° F) • Barometric pressure: More than 76 kPa (22.5 inHg)
Test procedure	1. Start the engine with all the accessories switched OFF. 2. Accelerate until the vehicle speed is 60 km/h (38 mph) and then drive the vehicle for 90 seconds. 3. Release the accelerator pedal and reduce vehicle speed to 30 km/h (18 mph). (During the monitor) 4. Accelerate until the vehicle speed is 60 km/h (38 mph) and then drive the vehicle for 20 seconds. 5. Release the accelerator pedal and reduce vehicle speed to 30 km/h (18 mph). (During the monitor) 6. Stop the safe place and turn the ignition switch to "LOCK" (OFF) position. 7. Start the engine and do Steps 1 to 6 again. *NOTE: When the vehicle is operating normally and the OBD-II Drive Cycle is carried out, the Readiness Codes will be set as "Complete" on the first drive cycle. The second drive cycle is required to set the Readiness Codes as "Complete" if a fault is detected during the first drive cycle.* 8. Confirm that the diagnostic trouble code (DTC) is not output.

PATTERN 4

Drive cycle pattern	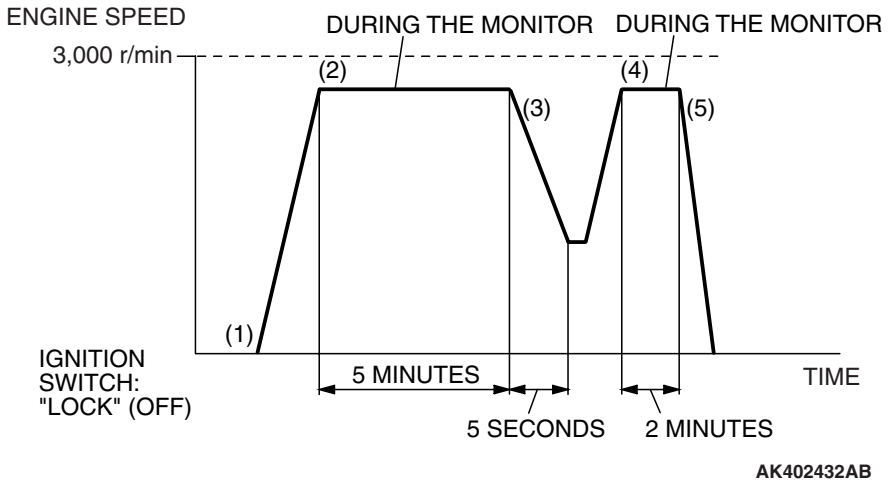
Inspection conditions	• Engine coolant temperature: More than 30° C (86° F) • Intake air temperature: More than –10° C (14° F) • Barometric pressure: More than 76 kPa (22.5 inHg)
Test procedure	1. Start the engine with all accessories switched OFF. 2. Drive the vehicle for 5 minutes at the following conditions. (During the monitor) • Engine speed: Less than 3,000 r/min • Airflow rate: More than 95 Hz, less than 149 Hz • Accelerator pedal: Except full close • Without rapid accelerator pedal movement 3. Release the accelerator pedal for 5 seconds. 4. Drive the vehicle for 2 minutes at the following conditions. (During the monitor) • Engine speed: Less than 3,000 r/min • Airflow rate: More than 95 Hz, less than 149 Hz • Manifold pressure: More than 24 kPa (7.0 inHg), less than 63 kPa (18.7 inHg) • Accelerator pedal: Except full close • Without rapid accelerator pedal movement *NOTE: When the system is normal, the monitor is completed earlier.* 5. Stop the safe place and turn the ignition switch to "LOCK" (OFF) position. 6. Start the engine and do Steps 1 to 5 again. *NOTE: When the vehicle is operating normally and the OBD-II Drive Cycle is carried out, the Readiness Codes will be set as "Complete" on the first drive cycle. The second drive cycle is required to set the Readiness Codes as "Complete" if a fault is detected during the first drive cycle.* 7. Confirm that the diagnostic trouble code (DTC) is not output.

PATTERN 5

Drive cycle pattern	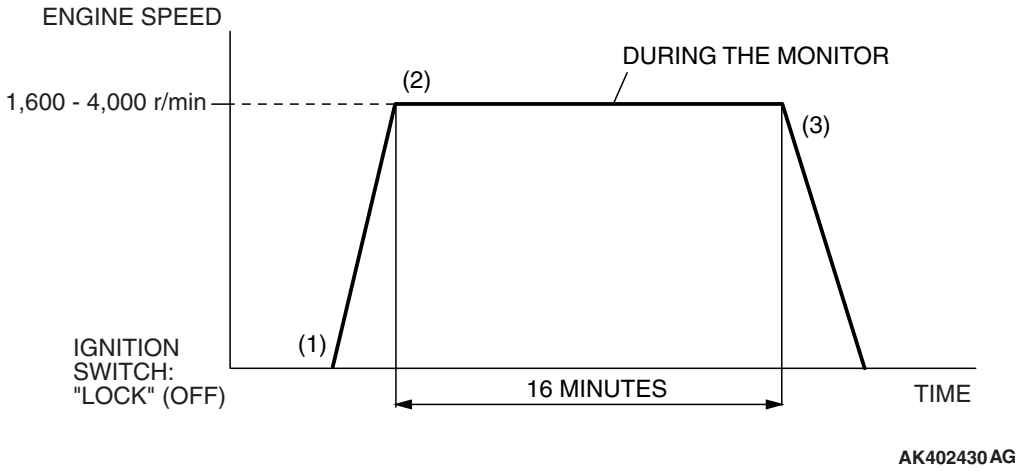
Inspection conditions	• Engine coolant temperature at engine start: Less than 36° C (96° F) • Intake air temperature at engine start: Less than 36° C (96° F) • Fuel amount at engine start: More than 15%, less than 40% • Engine coolant temperature: More than 60° C (41° F) • Intake air temperature: More than 5° C (41° F) • Barometric pressure: More than 76 kPa (22.5 inHg) • Fuel temperature: Less than 36° C (96° F)
Test procedure	1. Start the engine with all the accessories switched OFF. 2. Drive the vehicle for 16 minutes at the following conditions. (During the monitor) • Engine speed: More than 1,600 r/min, less than 4,000 r/min • Vehicle speed: More than 30 km/h (18 mph) • Engine load: More than 26%, less than 50% • Without rapid accelerator pedal movement *NOTE: Keep running as long as possible with the power steering pressure switch in the OFF position.* *NOTE: When the system is normal, the monitor is completed earlier.* 3. Stop the safe place and turn the ignition switch to "LOCK" (OFF) position. 4. Start the engine and do Steps 1 to 3 again. *NOTE: When the vehicle is operating normally and the OBD-II Drive Cycle is carried out, the Readiness Codes will be set as "Complete" on the first drive cycle. The second drive cycle is required to set the Readiness Codes as "Complete" if a fault is detected during the first drive cycle.* 5. Confirm that the diagnostic trouble code (DTC) is not output.

PATTERN 6

Inspection conditions	• Engine coolant temperature at engine start: Less than 36° C (96° F) • Intake air temperature at engine start: Less than 36° C (96° F) • Fuel amount at engine start: More than 40%, less than 85% • Engine coolant temperature: More than 20° C (68° F) • Intake air temperature: More than 5° C (41° F) • Barometric pressure: More than 76 kPa (22.5 inHg) • Fuel temperature: Less than 32° C (90° F)
Test procedure	1. Start the engine with all the accessories switched OFF. 2. Let the engine idle for 16 minutes. (During the monitor) *NOTE: When the system is normal, the monitor is completed earlier.* 3. Turn the ignition switch to "LOCK" (OFF) position. 4. Start the engine and do Steps 1 to 3 again. *NOTE: When the vehicle is operating normally and the OBD-II Drive Cycle is carried out, the Readiness Codes will be set as "Complete" on the first drive cycle. The second drive cycle is required to set the Readiness Codes as "Complete" if a fault is detected during the first drive cycle.* 5. Confirm that the diagnostic trouble code (DTC) is not output.

PATTERN 7

Drive cycle pattern	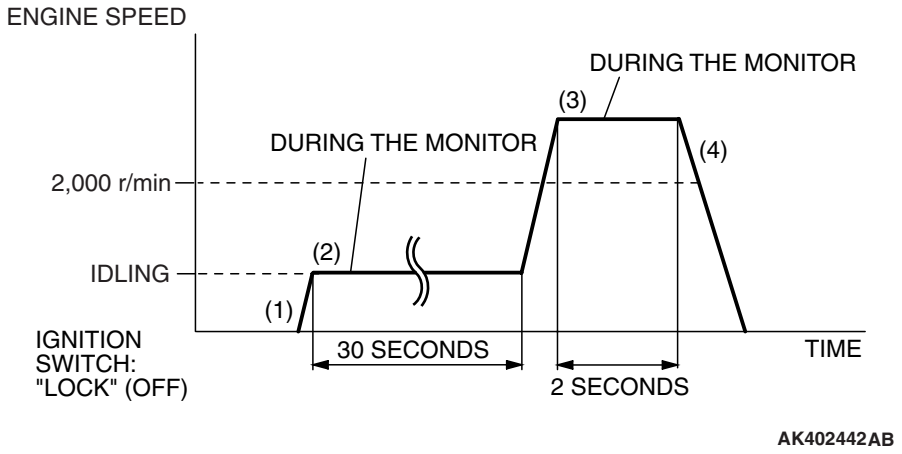
Inspection condition	• Engine coolant temperature at engine start: More than 0° C (32° F)
Test procedure	1. Start the engine with all the accessories switched OFF. 2. Let the engine idle for 30 seconds. (During the monitor) 3. Accelerate the vehicle for 2 seconds at the following conditions. (During the monitor) • Engine speed: More than 2,000 r/min • Engine load: More than 60% • Throttle position sensor output voltage: More than 3.5 volts 4. Stop the safe place and turn the ignition switch to "LOCK" (OFF) position. 5. Start the engine and do Steps 1 to 4 again. 6. Confirm that the diagnostic trouble code (DTC) is not output.

PATTERN 8

Drive cycle pattern	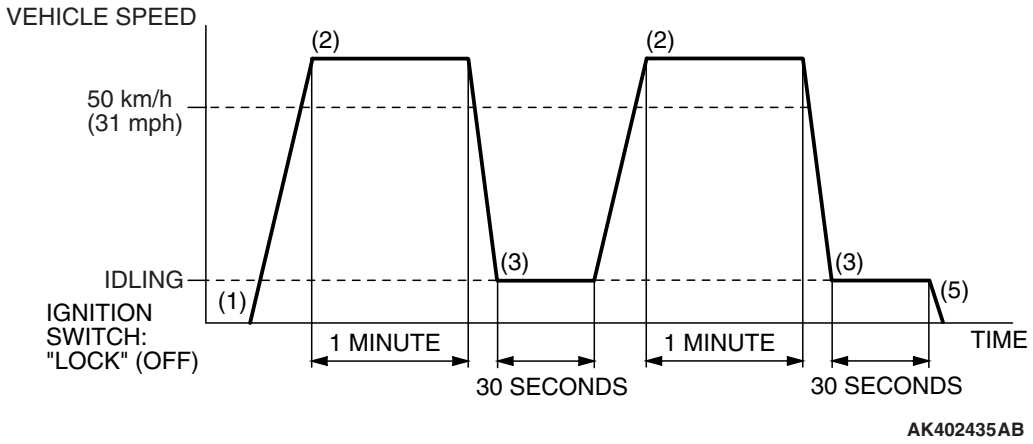
Inspection conditions	• Engine coolant temperature: More than 76° C (169° F)
Test procedure	1. Start the engine with all the accessories switched OFF. 2. Drive the vehicle at more than 50 km/h (31 mph) for 1 minute. 3. Stop at safe place and let the engine idle for 30 seconds. 4. Repeat Steps 2 and 3 again. 5. Stop the safe place and turn the ignition switch to "LOCK" (OFF) position. 6. Confirm that the diagnostic trouble code (DTC) is not output.

PATTERN 9

Drive cycle pattern	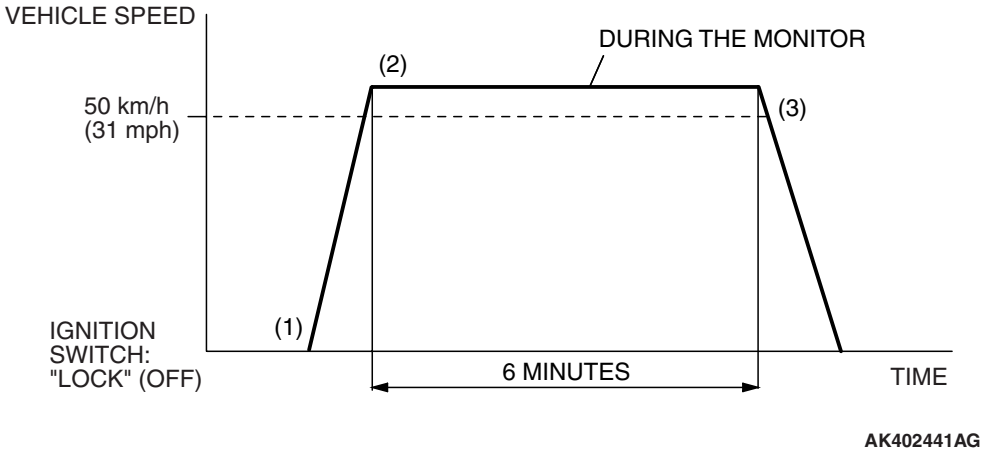 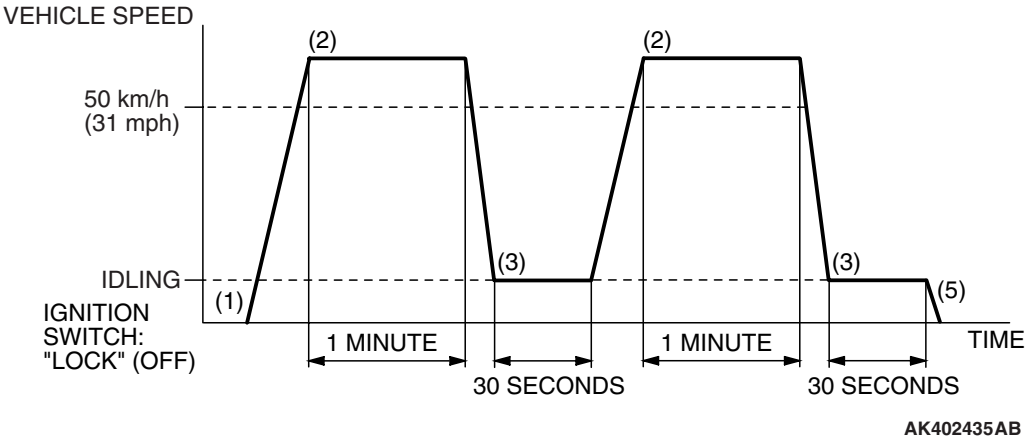
Inspection conditions	• Engine coolant temperature at the end of previous trip: More than 7° C (47° F) • Engine coolant temperature at engine start: More than 7° C (47° F) • Intake air temperature: Less than 60° C (140° F) • Engine coolant temperature: More than 40° C (104° F)
Test procedure	1. Start the engine with all the accessories switched OFF. 2. Drive the vehicle for 6 minutes at the following condition. (During the monitor) • Vehicle speed: More than 50 km/h (31 mph) • Except fuel cut 3. Stop at safe place and turn the ignition switch to "LOCK" (OFF) position. 4. Confirm that the diagnostic trouble code (DTC) is not output.

PATTERN 10

Drive cycle pattern	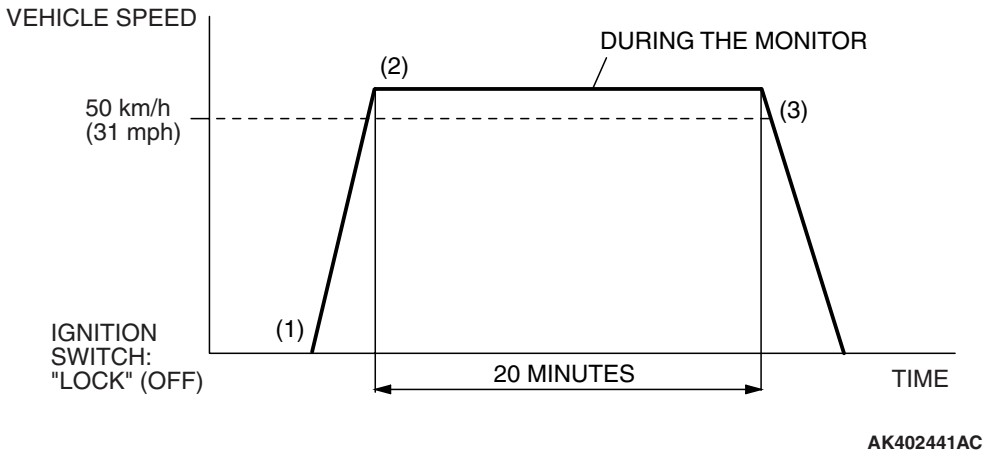
Inspection conditions	• Engine coolant temperature at engine start: More than 10° C (50° F), less than 76° C (168° F) • Difference between engine coolant temperature and intake air temperature at engine start: Less than 5° C (9° F) • Dropping of intake air temperature since engine start: Less than 2° C (3.6° F)
Test procedure	1. Start the engine with all the accessories switched OFF. 2. Drive the vehicle for 20 minutes at the following conditions. (During the monitor) • Vehicle speed: More than 50 km/h (31 mph) • Except fuel cut *NOTE: The system is normal if engine coolant temperature will rise more than 82°C (180°F) within 20 minutes.* 3. Stop at safe place and turn the ignition switch to "LOCK" (OFF) position. 4. Start the engine and do Steps 1 to 3 again. 5. Confirm that the diagnostic trouble code (DTC) is not output.

PATTERN 11

Drive cycle pattern	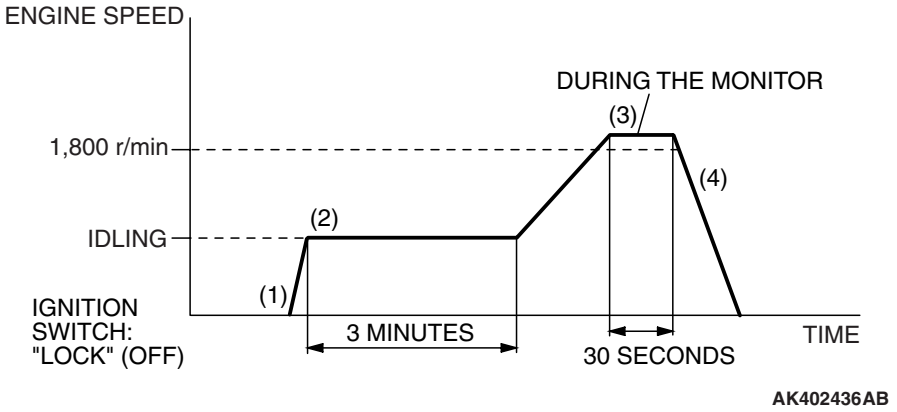
Inspection conditions	• Engine coolant temperature: More than 82° C (180° F)
Test procedure	1. Start the engine with all the accessories switched OFF. 2. Let the engine idle for 3 minutes. 3. Drive the vehicle for 30 seconds at the following conditions. (During the monitor) • Engine speed: More than 1,800 r/m • Engine load: More than 30%, less than 80% • Throttle position sensor output: Less than 3.0 volts • Except fuel cut 4. Stop the safe place and turn the ignition switch to "LOCK" (OFF) position. 5. Start the engine and do Steps 1 to 4 again. <Heated oxygen sensor monitor> 6. Confirm that the diagnostic trouble code (DTC) is not output.

PATTERN 12

Drive cycle pattern	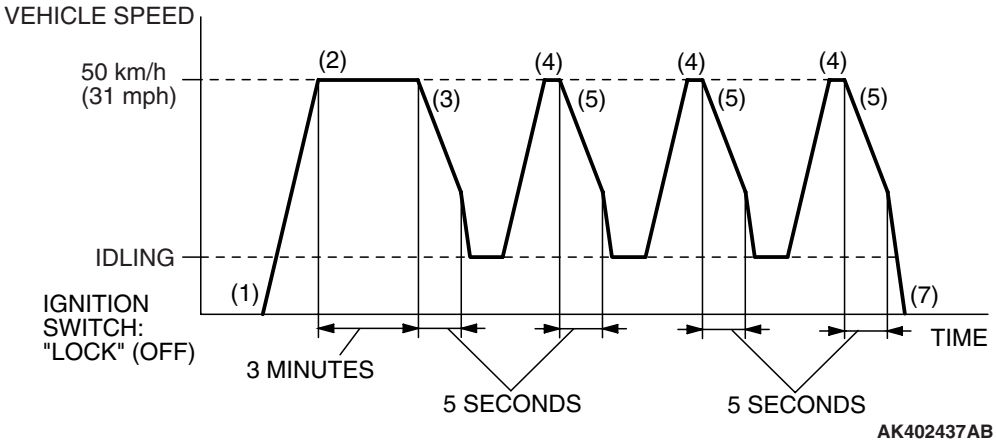
Inspection conditions	• Engine coolant temperature: More than 76° C (169° F)
Test procedure	1. Start the engine with all the accessories switched OFF. 2. Drive the vehicle at 50 km/h (31 mph) for 3 minutes. 3. Release the accelerator pedal for 5 seconds then stop the safe place. 4. Accelerate until the vehicle speed is at 50 km/h (31 mph) at the following conditions. • Engine speed: More than 1,500 r/min • Engine load: More than 40% 5. Release the accelerator pedal for 5 seconds then stop the safe place. 6. Repeat Steps 4 and 5 for 2 times. 7. Stop the safe place and turn the ignition switch to "LOCK" (OFF) position. 8. Start the engine and do Steps 1 to 7 again. 9. Confirm that the diagnostic trouble code (DTC) is not output.

PATTERN 13

Inspection conditions	• Engine coolant temperature at engine start: More than –10° C (14° F), less than 33° C (91° F) • Difference between engine coolant temperature and intake air temperature at engine start: Less than 5° C (9° F)
Test procedure	1. Start the engine with all the accessories switched OFF. 2. Drive the vehicle at more than 30 km/h (19 mph) until engine coolant temperature rises more than 60° C (140° F). (During the monitor) 3. Stop at safe place and turn the ignition switch to "LOCK" (OFF) position. 4. Start the engine and do Steps 1 to 3 again. 5. Confirm that the diagnostic trouble code (DTC) is not output.

PATTERN 14

Drive cycle pattern	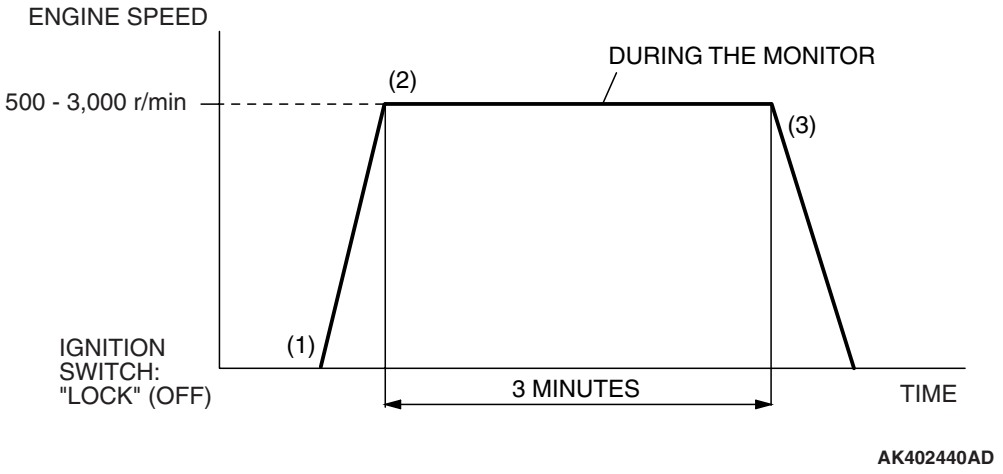
Inspection conditions	• Engine coolant temperature: More than –10° C (14° F) • Intake air temperature: More than –10° C (14° F) • Barometric pressure: More than 76 kPa (22.5 inHg)
Test procedure	1. Start the engine with all the accessories switched OFF. 2. Drive the vehicle for 3 minutes at the following conditions. (During the monitor) • Engine speed: More than 500 r/min, less than 3,000 r/min • Engine load: More than 25% • Without rapid accelerator pedal change • Except fuel cut 3. Stop the vehicle at the safe place and turn the ignition switch to "LOCK" (OFF) position. 4. Start the engine and do Steps 1 to 3 again. 5. Confirm that the diagnostic trouble code (DTC) is not output.

PATTERN 15

Drive cycle pattern	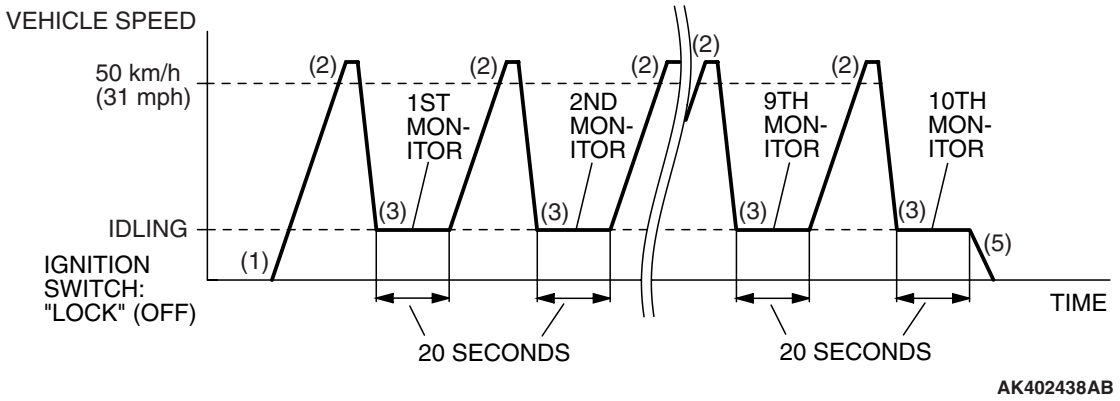
Test procedure	1. Start the engine with all the accessories switched OFF. 2. Accelerate until the vehicle speed is more than 50 km/h (31 mph). • Engine speed: More than 2,500 r/min • Engine load: More than 55% 3. Stop at safe place and let the engine idle for 20 seconds. (During the monitor) 4. Repeat Steps 2 and 3 for 10 times. 5. Stop the vehicle at the safe place and turn the ignition switch to "LOCK" (OFF) position. 6. Start the engine and do Steps 1 to 5 again. 7. Confirm that the diagnostic trouble code (DTC) is not output.

PATTERN 16

Test procedure	1. Start the engine with all the accessories switched OFF. 2. Accelerate with throttle position sensor output more than 4.2 volts for 5 seconds. (During the monitor) 3. Stop at safe place and turn the ignition switch to "LOCK" (OFF) position. 4. Start the engine and do Steps 1 to 3 again. 5. Confirm that the diagnostic trouble code (DTC) is not output.

PATTERN 17

Drive cycle pattern	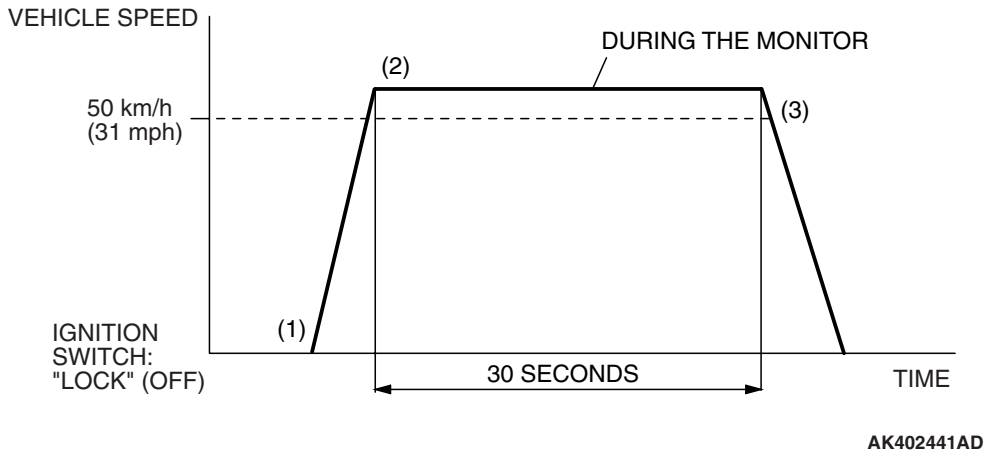
Inspection conditions	• Engine coolant temperature: More than 30° C (86° F)
Test procedure	1. Start the engine with all the accessories switched OFF. 2. Drive the vehicle at more than 50 km/h (31 mph) for 30 seconds. (During the monitor) 3. Stop the vehicle at the safe place and turn the ignition switch to "LOCK" (OFF) position. 4. Start the engine and do Steps 1 to 3 again. 5. Confirm that the diagnostic trouble code (DTC) is not output.

PATTERN 18

Inspection conditions	• Engine coolant temperature: More than 82° C (180° F) • Intake air temperature: More than –10° C (14° F) • Barometric pressure: More than 76 kPa (22.5 inHg)
Test procedure	1. Start the engine with all the accessories switched OFF. 2. Accelerate until the vehicle speed is more than 1.5 km/h (1 mph). 3. Stop at safe place and let the engine idle for 1 minute. (During the monitor) 4. Turn the ignition switch to "LOCK" (OFF) position. 5. Start the engine and do Steps 1 to 4 again. 6. Confirm that the diagnostic trouble code (DTC) is not output.

PATTERN 19

Drive cycle pattern	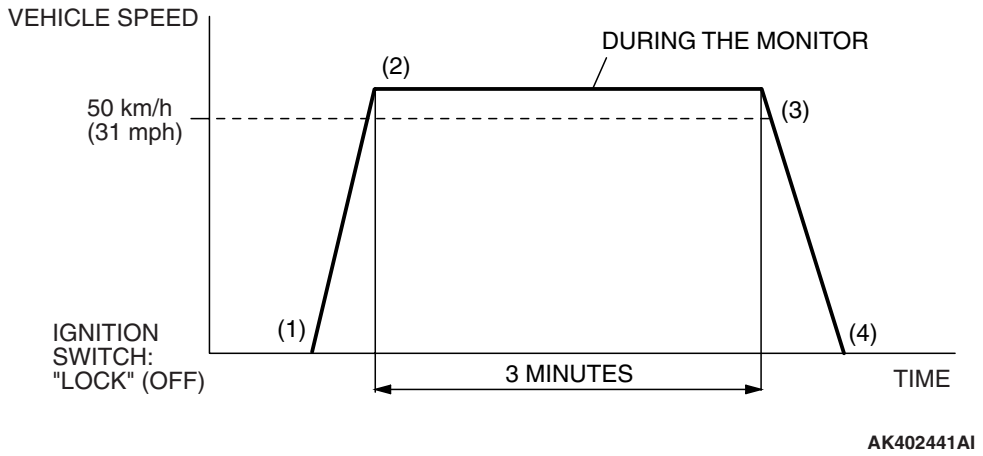
Inspection conditions	• Engine coolant temperature: More than 76° C (169° F)
Test procedure	1. Start the engine with all the accessories switched OFF. 2. Drive the vehicle at 50 km/h (31 mph) for 3 minutes. 3. Release the accelerator pedal for 10 seconds then stop the safe place. (During the monitor) 4. Turn the ignition switch to "LOCK" (OFF) position. 5. Start the engine and do Steps 1 to 4 again. 6. Confirm that the diagnostic trouble code (DTC) is not output.

PATTERN 20

Inspection conditions	• Engine coolant temperature: More than 82° C (180° F)
Test procedure	1. Start the engine with all the accessories switched OFF. 2. Let the engine idle for 15 minutes. (During the monitor) 3. Turn the ignition switch to "LOCK" (OFF) position. 4. Start the engine and do Steps 1 to 3 again. 5. Confirm that the diagnostic trouble code (DTC) is not output.

PATTERN 21

Inspection conditions	Engine coolant temperature: More than 77° C (171° F)
Test procedure	1. Start the engine with all the accessories switched OFF. 2. Let the engine idle for 30 seconds. 3. Drive the engine at more than 4,813 r/min for 5 seconds. (During the monitor) 4. Turn the ignition switch to "LOCK" (OFF) position. 5. Start the engine and do Steps 1 to 4 again. 6. Confirm that the diagnostic trouble code (DTC) is not output.

PATTERN 22

Inspection conditions	• Intake air temperature: More than –10° C (14° F) • Engine coolant temperature: More than 7° C (45° F)
Test procedure	1. Start the engine with all the accessories switched OFF. 2. Let the engine idle for 4 minutes. (During the monitor) 3. Turn the ignition switch to "LOCK" (OFF) position. 4. Start the engine and do Steps 1 to 3 again. 5. Confirm that the diagnostic trouble code (DTC) is not output.

PATTERN 23

Inspection conditions	• Fuel temperature sensor: Less than 36° C (96° F) <Fuel tank pressure sensor monitor> • Fuel amount at engine start: Less than 85% <Fuel tank pressure sensor monitor>
Test procedure	1. Start the engine with all the accessories switched OFF. 2. Let the engine idle at the engine speed less than 1,000 r/min for 15 seconds. (During the monitor) 3. Turn the ignition switch to "LOCK" (OFF) position. 4. Confirm that the diagnostic trouble code (DTC) is not output.

SYSTEM READINESS TEST STATUS

PURPOSE

The Readiness function (also referred to as I/M Readiness or I/M Flags) indicates if a full diagnostic check has been "Completed" (is "Ready") for each non-continuous monitor. Enhanced I/M State Emission Programs will use the Readiness status (Codes) to see if the vehicle is ready for OBD-II testing. "Incomplete" (Not Ready) codes will be one of the triggers for I/M failure.

OVERVIEW

The engine control module (ECM) monitors the following main diagnosis items and records whether the evaluation was completed or is incomplete. The Readiness Codes are established for the I/M programs, thereby confirming that the vehicles have not been tampered with by erasing the diagnostic trouble code(s) (DTCs) before I/M testing. The Readiness Codes and DTCs can be reset by disconnecting the battery or by erasing the codes with a scan tool MB991958 (M.U.T.-III sub assembly). For this reason, all the Readiness Codes must be displayed "Complete" before I/M testing.

When the monitors run and complete, the scan tool MB991958 (M.U.T.-III sub assembly) will display the Readiness Codes as "Complete" (General Scan Tools display as "Ready"). When the vehicle is operating normally and the OBD-II Drive Cycle is carried out, the Readiness Codes will be set as "Complete" on the first drive cycle. For DTCs requiring two drive cycles to detect a fault, the second drive cycle is required to set the Readiness Codes as "Complete" if a fault is detected during the first drive cycle. If the fault is still there after the second drive cycle, a DTC will be set.

- Catalyst: P0421
- Evaporative system: P0442, P0455, P0456
- Heated oxygen sensor: P0133, P0139
- Heated oxygen sensor heater: P0031, P0032, P0037, P0038
- EGR system: P0401

After all the Readiness Codes are displayed as "Complete", the technician is assured that any DTCs related to the monitor will be displayed if the system has a problem. That is why some State's I/M programs require the Readiness Code as "Complete" before they check for DTCs.

NOTE: After a repair is made for a DTC, the technician should drive the OBD-II Drive Cycle checking that the scan tool MB991958 (M.U.T.-III Sub Assembly) displays all the Readiness Codes as "Complete".

FAIL-SAFE FUNCTION REFERENCE TABLE

M1131153000664

When the main sensor malfunctions are detected by the diagnostic test mode, the vehicle is controlled by means of the following defaults.

MALFUNCTION ITEM	CONTROL CONTENTS DURING MALFUNCTION
Volume airflow sensor	• Uses the throttle position sensor signal and engine speed signal (crankshaft position sensor signal) for basic injector drive time and basic ignition timing from the pre-set mapping. • Fixes the IAC motor in the appointed position so idle air control is not performed.
Intake air temperature sensor	Controls as if the intake air temperature is 25° C (77° F).
Throttle position sensor	No increase in fuel injection amount during acceleration due to the unreliable throttle position sensor signal.
Engine coolant temperature sensor	Controls as if the engine coolant temperature is 80° C (176° F). (This control will be continued until the ignition switch is turned to the "LOCK" (OFF) position even though the sensor signal returns to normal.)
Camshaft position sensor	Injects fuel into the cylinders in the order 1 - 3 - 4 - 2 with irregular timing. (After the ignition switch is turned to the "ON", the No. 1 cylinder top dead center is not detected at all.)
Barometric pressure sensor	Controls as if the barometric pressure is 101 kPa (30 in Hg).
Knock sensor	Switches the ignition timing from ignition timing for high octane to ignition timing for standard octane fuel.
Heated oxygen sensor <front>	Air/fuel ratio closed loop control is not performed.
Heated oxygen sensor <rear>	Performs the closed loop control of the air/fuel ratio by using only the signal of the heated oxygen sensor (front) installed on the front side of the catalytic converter.
Generator FR terminal	Does not restrict the generator output with respect to electrical load (to be operated as an ordinary generator).
Misfire detection	The ECM stops supplying fuel to the cylinder with the highest misfiring rate if a misfiring that could damage the catalytic converter is detected.

DIAGNOSTIC TROUBLE CODE CHART

M1131151001984

DTC	DIAGNOSTIC ITEMS	REFERENCE PAGE
P0011	Variable valve timing system target error	P.13A-47
P0031	Heated oxygen sensor heater control circuit Low (sensor 1)	P.13A-50
P0032	Heated oxygen sensor heater control circuit High (sensor 1)	P.13A-60
P0037	Heated oxygen sensor heater control circuit Low (sensor 2)	P.13A-64
P0038	Heated oxygen sensor heater control circuit High (sensor 2)	P.13A-73
P0069	Abnormal correlation between manifold absolute pressure sensor and barometric pressure sensor	P.13A-77
P0090	Fuel pressure solenoid circuit	P.13A-82
P0101*	Volume airflow circuit range/performance problem	P.13A-90
P0102*	Volume airflow circuit low input	P.13A-98
P0106	Manifold absolute pressure circuit range/performance problem	P.13A-107
P0107	Manifold absolute pressure circuit low input	P.13A-116
P0108	Manifold absolute pressure circuit high input	P.13A-129
P0111*	Intake air temperature circuit range/performance problem	P.13A-138
P0112*	Intake air temperature circuit low input	P.13A-145
P0113*	Intake air temperature circuit high input	P.13A-150
P0116*	Engine coolant temperature circuit range/performance problem	P.13A-157
P0117*	Engine coolant temperature circuit low input	P.13A-167
P0118*	Engine coolant temperature circuit high input	P.13A-172
P0121*	Throttle position sensor circuit range/performance problem	P.13A-179
P0122*	Throttle position sensor circuit low input	P.13A-189
P0123*	Throttle position sensor circuit high input	P.13A-196
P0125*	Insufficient coolant temperature for closed loop fuel control	P.13A-202
P0128	Coolant thermostat (coolant temperature below thermostat regulating temperature)	P.13A-214
P0130	Heated oxygen sensor circuit (sensor 1)	P.13A-216
P0131	Heated oxygen sensor circuit low voltage (sensor 1)	P.13A-231
P0132	Heated oxygen sensor circuit high voltage (sensor 1)	P.13A-238
P0133	Heated oxygen sensor circuit slow response (sensor 1)	P.13A-243
P0134*	Heated oxygen sensor circuit no activity detected (sensor 1)	P.13A-249
P0136	Heated oxygen sensor circuit (sensor 2)	P.13A-258
P0137	Heated oxygen sensor circuit low voltage (sensor 2)	P.13A-269
P0138	Heated oxygen sensor circuit high voltage (sensor 2)	P.13A-275
P0139	Heated oxygen sensor circuit slow response (sensor 2)	P.13A-279
P0140	Heated oxygen sensor circuit no activity detected (sensor 2)	P.13A-282
P0171	System too lean	P.13A-285

DTC	DIAGNOSTIC ITEMS	REFERENCE PAGE
P0172	System too rich	P.13A-293
P0181	Fuel tank temperature sensor circuit range/performance	P.13A-299
P0182	Fuel tank temperature sensor circuit low input	P.13A-309
P0183	Fuel tank temperature sensor circuit high input	P.13A-315
P0201	Injector circuit-Cylinder 1	P.13A-323
P0202	Injector circuit-Cylinder 2	P.13A-323
P0203	Injector circuit-Cylinder 3	P.13A-323
P0204	Injector circuit-Cylinder 4	P.13A-323
P0234	Turbocharger wastegate system malfunction	P.13A-333
P0243	Turbocharger wastegate solenoid circuit	P.13A-335
P0300	Random/multiple cylinder misfire detected	P.13A-343
P0301	Cylinder 1 misfire detected	P.13A-350
P0302	Cylinder 2 misfire detected	P.13A-350
P0303	Cylinder 3 misfire detected	P.13A-350
P0304	Cylinder 4 misfire detected	P.13A-350
P0325	Knock sensor circuit	P.13A-355
P0335*	Crankshaft position sensor circuit	P.13A-361
P0340*	Exhaust camshaft position sensor circuit	P.13A-377
P0365	Intake camshaft position sensor circuit	P.13A-390
P0401	Exhaust gas recirculation flow insufficient detected	P.13A-403
P0403	Exhaust gas recirculation control circuit	P.13A-406
P0420	Warm up catalyst efficiency below threshold	P.13A-415
P0441	Evaporative emission control system incorrect purge flow	P.13A-419
P0442	Evaporative emission control system leak detected (Small leak)	P.13A-423
P0443	Evaporative emission control system purge control valve circuit	P.13A-437
P0446	Evaporative emission control system vent control circuit	P.13A-446
P0450	Evaporative emission control system pressure sensor malfunction	P.13A-455
P0451	Evaporative emission control system pressure sensor range/performance	P.13A-471
P0452	Evaporative emission control system pressure sensor low input	P.13A-487
P0453	Evaporative emission control system pressure sensor high input	P.13A-503
P0455	Evaporative emission control system leak detected (Gross leak)	P.13A-519
P0456	Evaporative emission control system leak detected (Very small leak)	P.13A-537
P0461	Fuel level sensor (main) circuit range/performance	P.13A-551
P0462	Fuel level sensor circuit low input	P.13A-556
P0463	Fuel level sensor circuit high input	P.13A-566
P0500	Vehicle speed sensor	P.13A-572

DTC	DIAGNOSTIC ITEMS	REFERENCE PAGE
P0506	Idle control system RPM lower than expected	P.13A-584
P0507	Idle control system RPM higher than expected	P.13A-595
P0513	Immobilizer malfunction	P.13A-605
P0551	Power steering pressure sensor circuit range/performance	P.13A-609
P0554	Power steering pressure sensor circuit intermittent	P.13A-620
P0603	EEPROM malfunction	P.13A-626
P0622	Generator FR terminal circuit malfunction	P.13A-628
P0630	VIN malfunction	P.13A-634
P0830	Clutch pedal position switch circuit range/performance	P.13A-637
P1021	Oil feeder control valve circuit	P.13A-643
P1530	A/C1 switch circuit intermittent	P.13A-651
P1603*	Battery backup circuit malfunction	P.13A-653
P2066	Fuel level sensor (sub) circuit range/performance	P.13A-659
P2195	Inactive heated oxygen sensor (sensor 1)	P.13A-663
P2228*	Barometric pressure circuit low input	P.13A-667
P2229*	Barometric pressure circuit high input	P.13A-679
P2263	Intake charge system malfunction	P.13A-687

NOTE: Do not replace the engine control module (ECM) until a thorough terminal check reveals there are no short/open circuits.

NOTE: Check that the ECM ground circuit is normal before checking for the cause of the problem.

NOTE: After the ECM detects a malfunction, a diagnostic trouble code is recorded the next time the engine is started and the same malfunction is re-detected. However, for items marked with a "", the diagnostic trouble code is recorded on the first detection of the malfunction.*

NOTE: Sensor 1 indicates the sensor mounted at a position closest to the engine, and sensor 2 indicates the sensor mounted at the position second closest to the engine.

SYMPTOM CHART

M1131151501280

NOTE: Check that the engine control module (ECM) ground circuit is normal before checking for the cause of the problem.

SYMPTOMS		INSPECTION PROCEDURE	REFERENCE PAGE
Communication with scan tool is impossible	Communication with all systems is not possible	1	P.13A-690
	Communication with ECM only is not possible	2	P.13A-693
Malfunction Indicator Lamp (SERVICE ENGINE SOON) and related parts	The malfunction indicator lamp (SERVICE ENGINE SOON) does not illuminate right after the ignition switch is turned to the "ON" position	3	P.13A-696
	The malfunction indicator lamp (SERVICE ENGINE SOON) remains illuminated and never goes out	4	P.13A-701
Starting	Cranks, won't start	5	P.13A-704
	Starts up and dies	6	P.13A-708
	Hard starting	7	P.13A-713
Idling stability (improper idling)	Unstable idle (rough idle, hunting)	8	P.13A-718
	Idle speed is high (improper idle speed)	9	P.13A-723
	Idle speed is low (improper idle speed)	10	P.13A-725
Idling stability (engine stalls)	When the engine is cold, it stalls at idle (die out)	11	P.13A-727
	When the engine is hot, it stalls at idle (die out)	12	P.13A-731
	The engine stalls when accelerating (pass out)	13	P.13A-736
	The engine stalls when decelerating	14	P.13A-737
Driving	Hesitation, sag or stumble	15	P.13A-740
	Acceleration shock	16	P.13A-744
	Deceleration shock	17	P.13A-745
	Poor acceleration	18	P.13A-747
	Surge	19	P.13A-752
	Knocking	20	P.13A-756
Dieseling (Run-on)		21	P.13A-758
Too high CO and HC concentration when idling		22	P.13A-758
IM240 test failure	Transient, mass emission tailpipe test failure	23	P.13A-761
	Purge flow test of the evaporative emission canister failure	24	P.13A-766
	Pressure test of the evaporative system failure	25	P.13A-767

SYMPTOMS	INSPECTION PROCEDURE	REFERENCE PAGE
Generator output voltage is low (approximately 12.3 volts)	26	P.13A-768
Improper idle speed when the A/C is on (A/C load signal)	27	P.13A-772
Radiator fan is inoperative	28	P.13A-774
A/C condenser fan is inoperative	29	P.13A-777
Power supply system and ignition switch-IG system	30	P.13A-780
Fuel pump system	31	P.13A-789
Ignition switch –ST system	32	P.13A-807
Ignition circuit system	33	P.13A-813
A/C system	34	P.13A-821

PROBLEM SYMPTOMS TABLE (FOR YOUR INFORMATION)

ITEMS		SYMPTOM
Starting	Won't start	The starter is used to crank the engine, but there is no combustion within the cylinders, and the engine won't start.
	Starts up and dies	The engine starts, but then the engine soon stalls.
	Hard starting	Engine starts after cranking a while.
Idling stability	Hunting	Engine speed doesn't remain constant; changes at idle.
	Rough idle	Usually, a judgement can be based upon the movement of the tachometer pointer, and the vibration transmitted to the steering wheel, shift lever, body, etc.
	Incorrect idle speed	The engine doesn't idle at the correct speed.
	Engine stall (die out)	The engine stalls when the foot is taken from the accelerator pedal, regardless of whether the vehicle is moving or not.
	Engine stall (pass out)	The engine stalls when the accelerator pedal is depressed.

ITEMS		SYMPTOM
Driving	Hesitation Sag	"Hesitation" is the delay in response of the vehicle speed (engine speed). This occurs when the accelerator is depressed in order to accelerate from the speed at which the vehicle is now traveling, or a temporary drop in vehicle speed (engine speed) during such acceleration. Serious hesitation is called "sag". 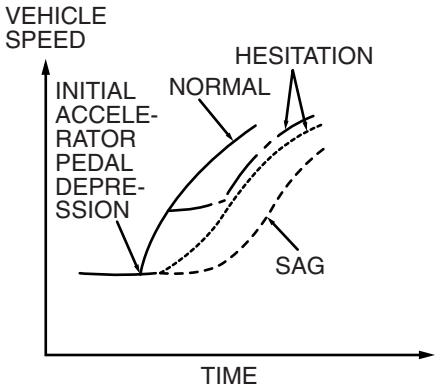 AKX01361AB
	Poor acceleration	Poor acceleration is inability to obtain an acceleration corresponding to the degree of throttle opening, even though acceleration is smooth or the inability to reach maximum speed.
	Stumble	Engine speed increase is delayed when the accelerator pedal is initially depressed for acceleration. 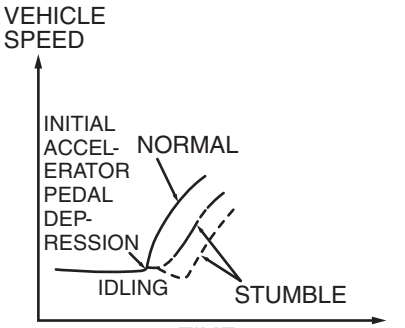 AKX01362
	Shock	The feeling of a comparatively large impact or vibration when the engine is accelerated or decelerated.
	Surge	This is slight acceleration and deceleration feel usually felt during steady, light throttle cruise. Most notable under light loads.
	Knocking	A sharp sound during driving, which sounds like a hammer striking the cylinder walls. It makes poor driveability.
Stopping	Dieseling (run on)	The condition in which the engine continues to run after the ignition switch is turned to the "LOCK" (OFF) position. Also called "dieseling".

DIAGNOSTIC TROUBLE CODE PROCEDURES

DTC P0011: Variable Valve Timing System

TECHNICAL DESCRIPTION

- The ECM checks the variable valve timing system for malfunction.

DESCRIPTIONS OF MONITOR METHODS

The phase angle of the intake camshaft is higher than the specified value.

MONITOR EXECUTION

Continuous

DTC SET CONDITIONS

Logic Flow Chart

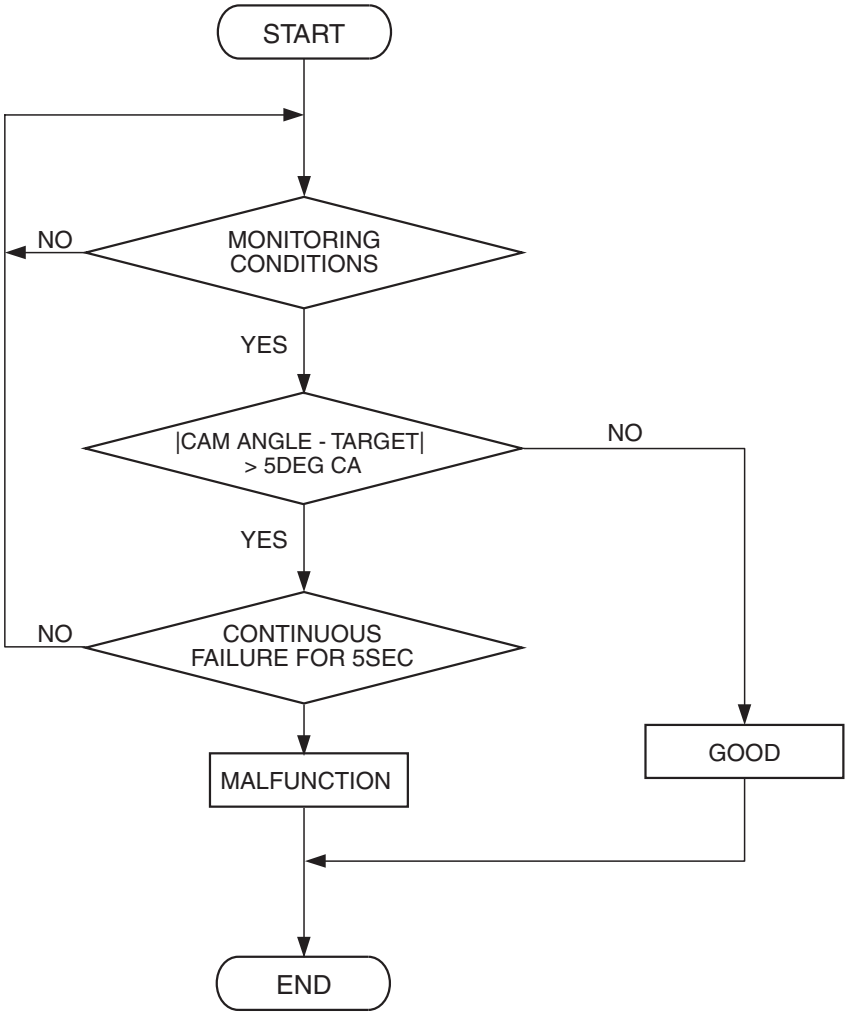

AK502057

MONITOR EXECUTION CONDITIONS (Other monitor and Sensor)

Other Monitor (There is no temporary DTC stored in memory for the item monitored below)

- Not applicable

Sensor (The sensor below is determined to be normal)

- Not applicable

Check Conditions

- 20 seconds have pass since the starting sequence was completed.
- Engine speed is 1,200 r/min or more.
- Engine coolant temperature is higher than 76° C (169° F).

Judgment Criterion

- The phase angle of the intake camshaft is 5 degrees or more for 5 seconds.

OBD-II DRIVE CYCLE PATTERN

Refer to Diagnostic Function –OBD-II Drive Cycle – Pattern 21.

TROUBLESHOOTING HINTS (The most likely causes for this code to be set are:)

- Oil feeder control valve failed.
- Oil passage of variable valve timing control system clogged.
- Variable valve timing sprocket operation mechanism stuck.
- ECM failed.

DIAGNOSIS

Required Special Tools

- MB991958: Scan tool (M.U.T.-III Sub Assembly)
  - MB991824: V.C.I.
  - MB991827: USB Cable
  - MB991911: Main Harness B

STEP 1. Using scan tool MB991958, read the diagnostic trouble code (DTC).

⚠ CAUTION

To prevent damage to scan tool MB991958, always turn the ignition switch to the "LOCK" (OFF) position before connecting or disconnecting scan tool MB991958.

(1) Connect scan tool MB991958 to the data link connector.
(2) Turn the ignition switch to the "ON" position.
(3) Set scan tool MB991958, read the DTC.
(4) Turn the ignition switch to the "LOCK" (OFF) position.

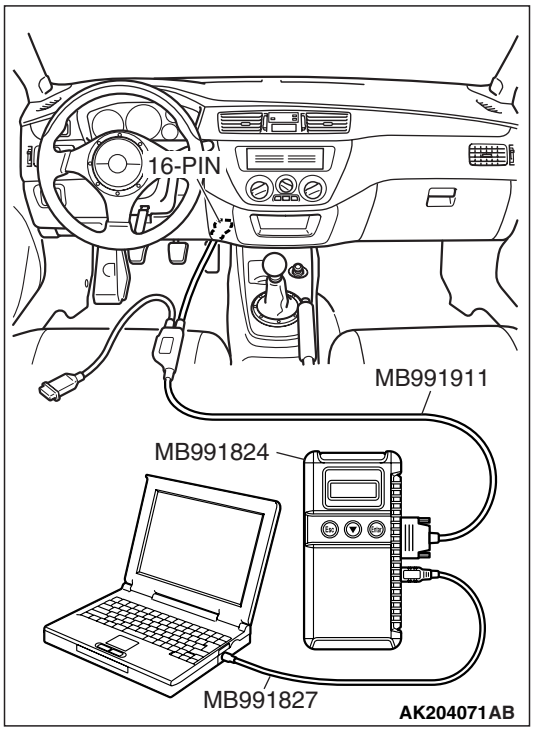

Q: Is the diagnostic trouble code other than P0011 set?

YES : Refer to, Diagnostic Trouble Code Chart P.13A-41.
NO : Go to Step 2.

STEP 2. Check oil feeder control valve itself.

- Check oil feeder control valve itself (Refer to Oil Feeder Control Valve Check P.13A-879).

Q: Is the check result normal?

YES : Go to Step 3.
NO : Replace oil feeder control valve. Then go to Step 6.

STEP 3. Check oil passage of variable valve timing control system for being clogged.

Q: Is the check result normal?

YES : Go to Step 4.
NO : Repair it. Then go to Step 6.

STEP 4. Check variable valve timing sprocket operation mechanism for being stuck.

Q: Is the check result normal?

YES : Go to Step 5.
NO : Repair it. Then go to Step 6.

STEP 5. Check the trouble symptoms.

(1) Carry out test drive with the drive cycle pattern. Refer to Diagnostic Function –OBD-II Drive Cycle –Pattern 21 P.13A-12.
(2) Check the diagnostic trouble code (DTC).

Q: Is DTC P0011 set?

YES : Replace the ECM. Then go to Step 6.
NO : It can be assumed that this malfunction is intermittent. Refer to GROUP 00, How to Use Troubleshooting/Inspection Service Points –How to Cope with Intermittent Malfunctions P.00-13.

STEP 6. Test the OBD-II drive cycle.

(1) Carry out a test drive with the drive cycle pattern. Refer to Diagnostic Function –OBD-II Drive Cycle –Pattern 21 P.13A-12.
(2) Check the diagnostic trouble code (DTC).

Q: Is DTC P0011 set?

YES : Retry the troubleshooting.
NO : The inspection is complete.

DTC P0031: Heated Oxygen Sensor Heater Control Circuit Low (sensor 1)

Heated Oxygen Sensor (front) Heater Circuit

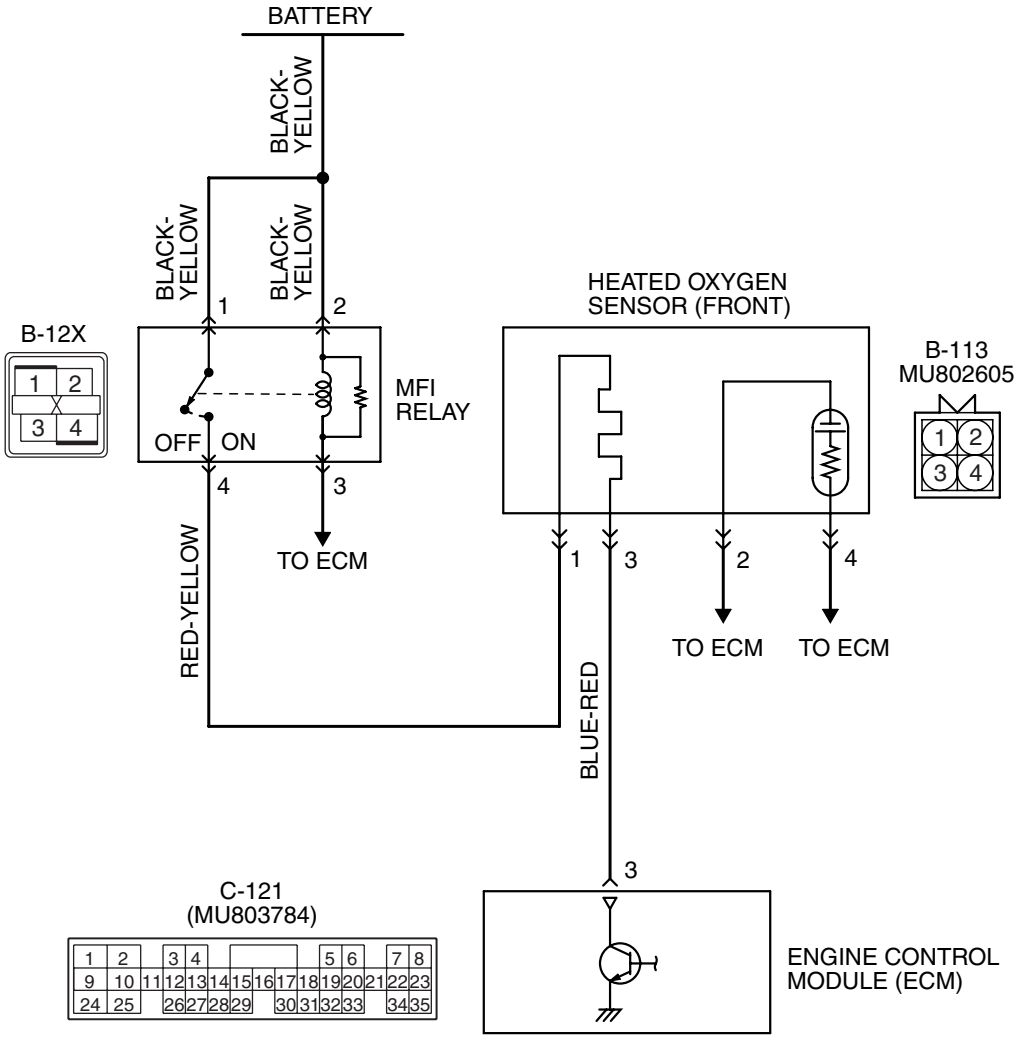

AK502058

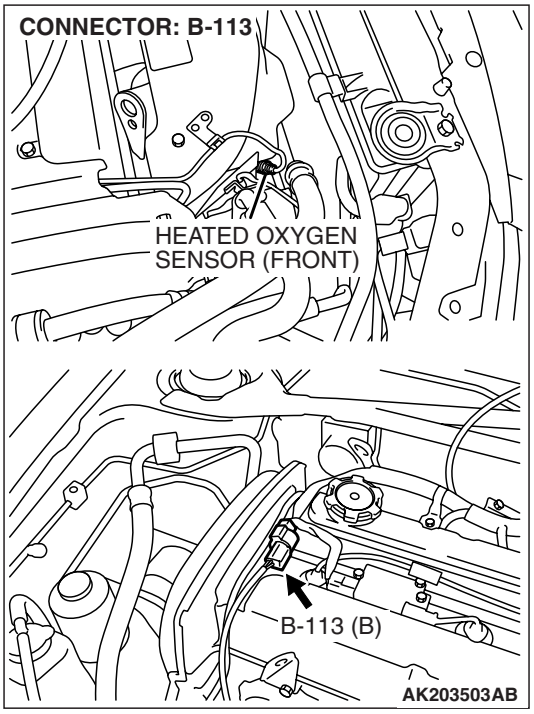

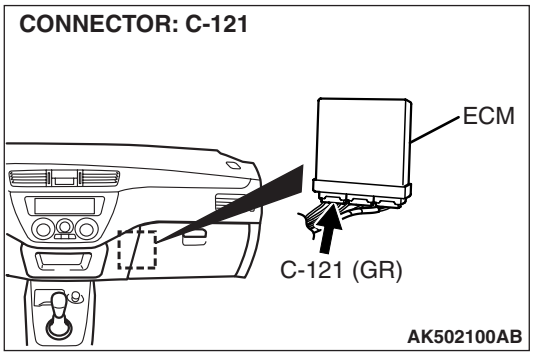

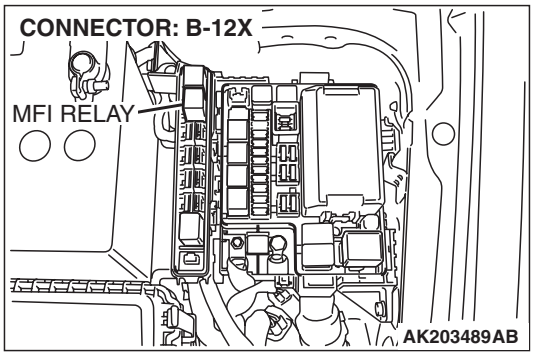

CIRCUIT OPERATION

- Power is supplied from the MFI relay (terminal No. 4) to the heated oxygen sensor (front) heater.
- The ECM (terminal No. 3) controls continuity to the heated oxygen sensor (front) heater by turning the power transistor in the ECM "ON" and "OFF".

TECHNICAL DESCRIPTION

- The ECM checks whether the heater current is within a specified range when the heater is energized.
- The ECM checks whether the heater voltage is within a specified range when the heater is not energized.

DESCRIPTIONS OF MONITOR METHODS

Heated oxygen sensor heater (front) current or voltage is out of specified range.

MONITOR EXECUTION

Continuous

MONITOR EXECUTION CONDITIONS (Other monitor and Sensor)

Other Monitor (There is no temporary DTC stored in memory for the item monitored below)

- Not applicable

Sensor (The sensor below is determined to be normal)

- Engine coolant temperature sensor

DTC SET CONDITIONS

Logic Flow Chart

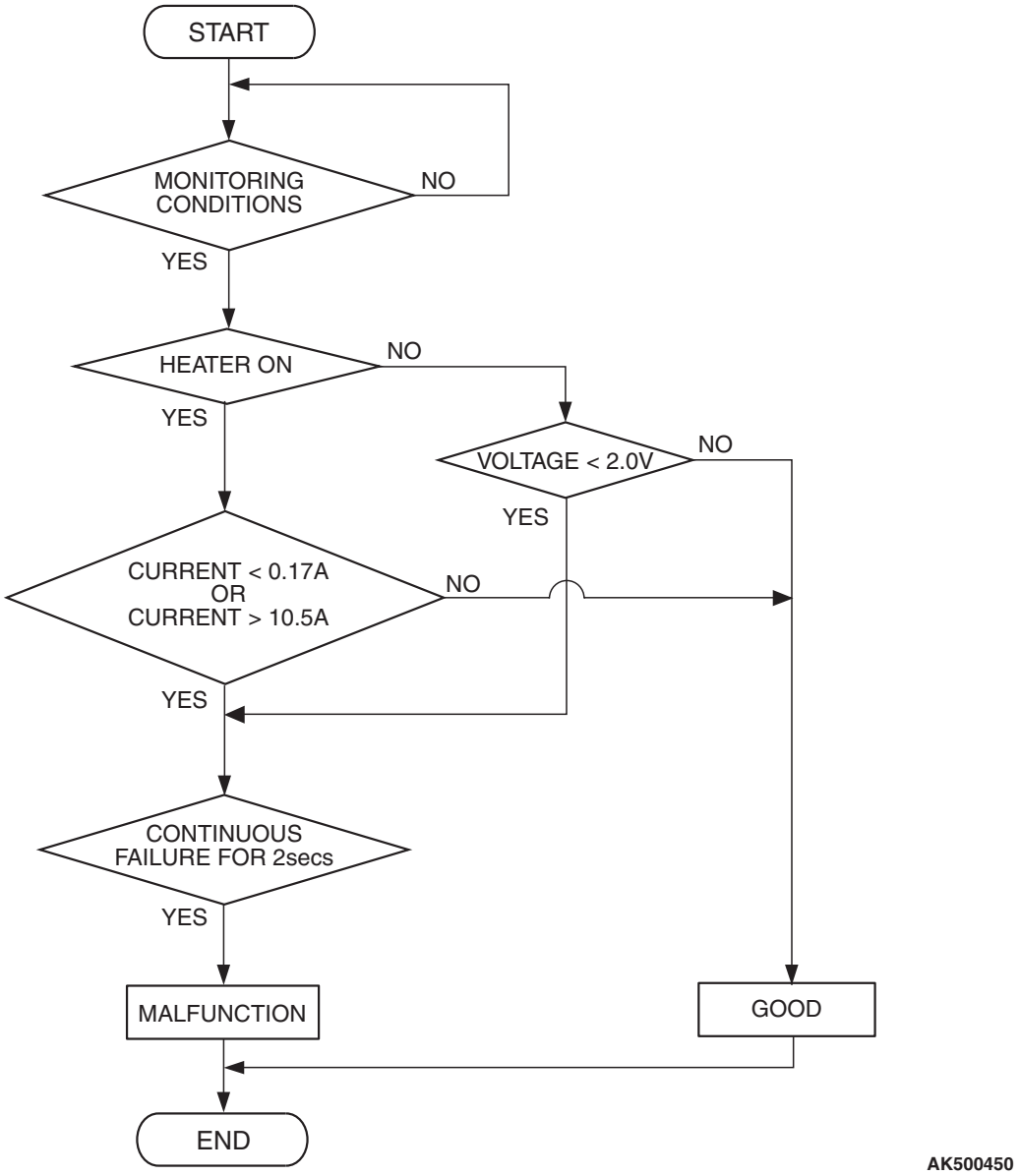

Check Conditions

- More than 2 seconds have passed since the engine starting sequence was completed.
- While the heated oxygen sensor (front) heater is on.
- Battery positive voltage is between 11 and 16.5 volts.

Judgement Criterion

- The heated oxygen sensor (front) heater current has continued to be lower than 0.17 ampere for 2 seconds.

Check Conditions

- More than 2 seconds have passed since the engine starting sequence was completed.
- While the heated oxygen sensor (front) heater is off.
- Battery positive voltage is between 11 and 16.5 volts.

Judgement Criterion

- The heated oxygen sensor (front) heater voltage has continued to be lower than 2.0 volts for 2 seconds.

OBD-II DRIVE CYCLE PATTERN

Refer to Diagnostic Function –OBD-II Drive Cycle – Pattern 2 P.13A-12.

TROUBLESHOOTING HINTS (The most likely causes for this code to be set are:)

- Open or shorted heated oxygen sensor (front) heater circuit, harness damage or connector damage.
- Open circuit in heated oxygen sensor (front) heater.
- ECM failed.

DIAGNOSIS

Required Special Tool:

- MB998464: Test Harness

STEP 1. Check harness connector B-113 at the heated oxygen sensor (front) for damage.

Q: Is the harness connector in good condition?

YES : Go to Step 2.

NO : Repair or replace it. Refer to GROUP 00E, Harness Connector Inspection P.00E-2. Then go to Step 12.

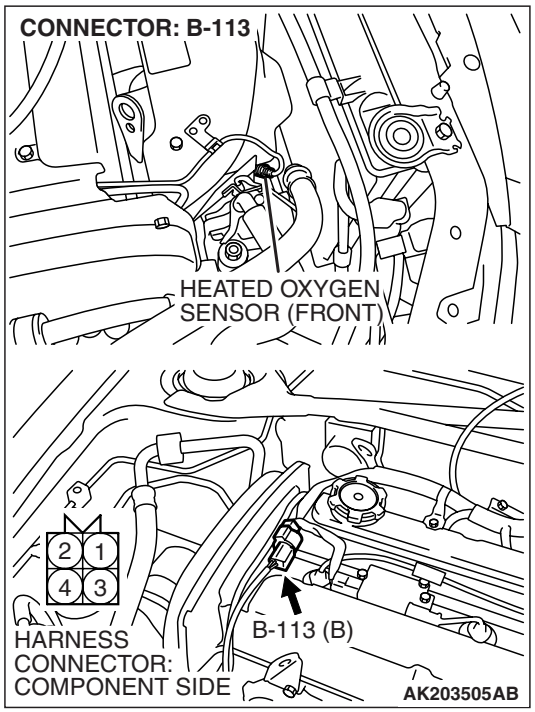

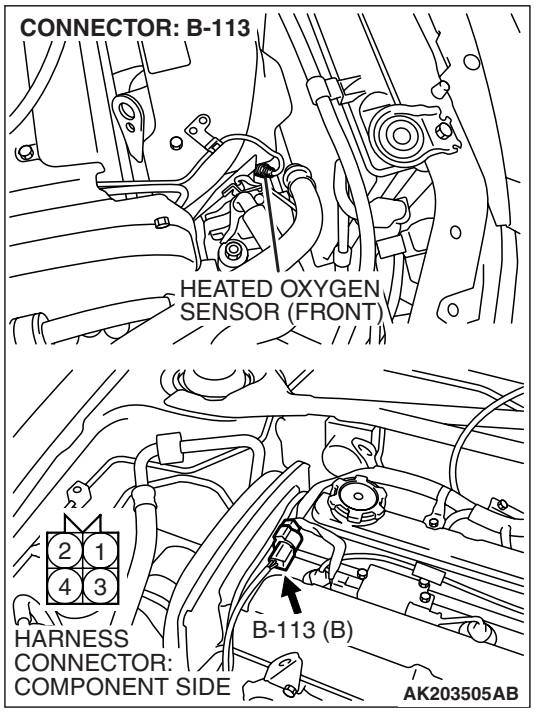

STEP 2. Check the heated oxygen sensor (front).

(1) Disconnect heated oxygen sensor (front) connector B-113 and connect test harness special tool, MD998464, to the connector on the heated oxygen (front) sensor side.

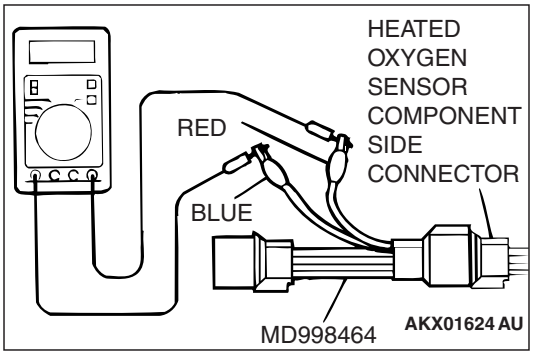

(2) Measure the resistance between heated oxygen sensor connector terminal No. 1 and terminal No. 3.

Standard value: 4.5 – 8.0 ohms [at 20° C (68° F)]

Q: Is the measured resistance between 4.5 and 8.0 ohms [at 20° C (68° F)]?

YES : Go to Step 3.

NO : Replace the heated oxygen sensor (front). Then go to Step 12.

STEP 3. Measure the power supply voltage at heated oxygen sensor (front) harness side connector B-113.

(1) Disconnect the connector B-113 and measure at the harness side.

(2) Turn the ignition switch to the "ON" position.

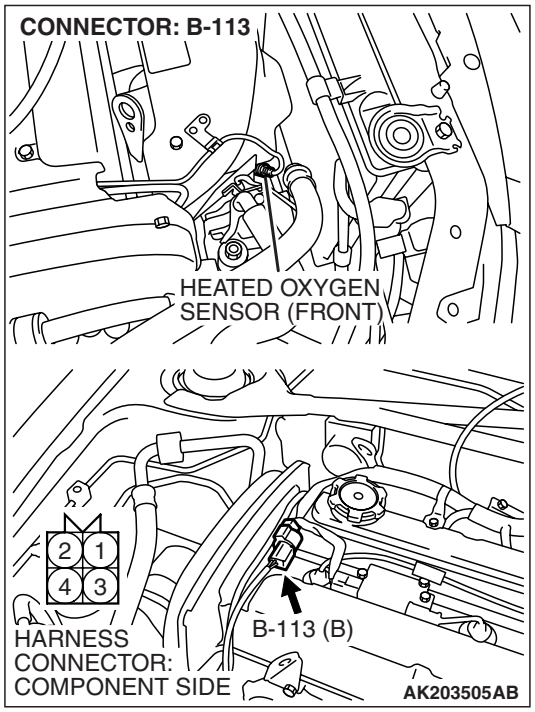

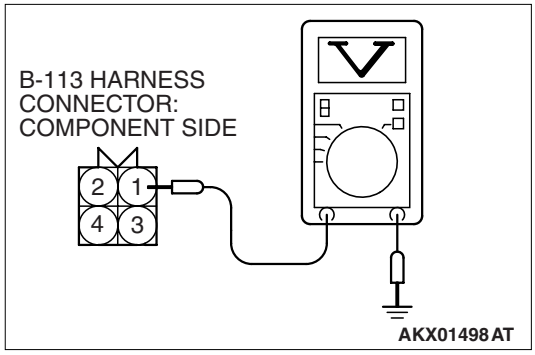

(3) Measure the voltage between terminal No. 1 and ground.
- Voltage should be battery positive voltage.

(4) Turn the ignition switch to the "LOCK" (OFF) position.

Q: Is battery positive voltage (approximately 12 volts) present?

YES : Go to Step 5.

NO : Go to Step 4.

STEP 4. Check harness connector B-12X at the MFI relay for damage.

Q: Is the harness connector in good condition?

YES : Repair harness wire between MFI relay connector B-12X (terminal No. 4) and heated oxygen sensor (front) connector B-113 (terminal No. 1) because of open circuit or short circuit to ground. Then go to Step 12.

NO : Repair or replace it. Refer to GROUP 00E, Harness Connector Inspection P.00E-2. Then go to Step 12.

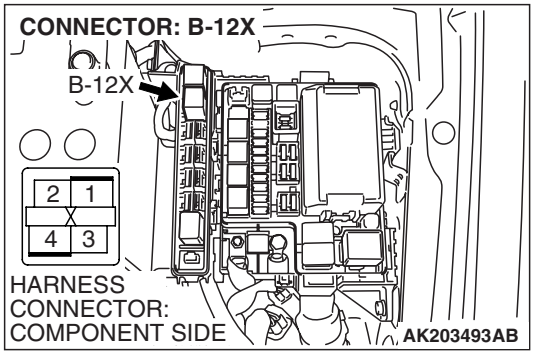

STEP 5. Measure the power supply voltage at ECM harness side connector C-121 by backprobing.

(1) Do not disconnect the connector C-121.
(2) Turn the ignition switch to the "ON" position.

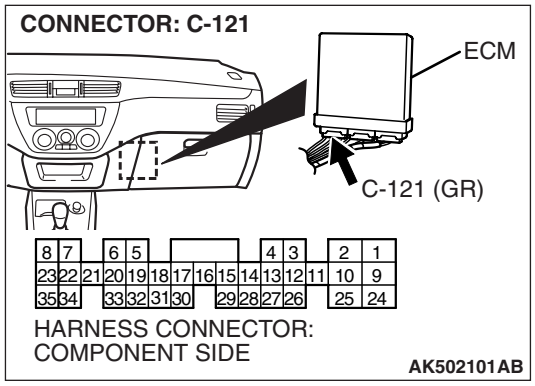

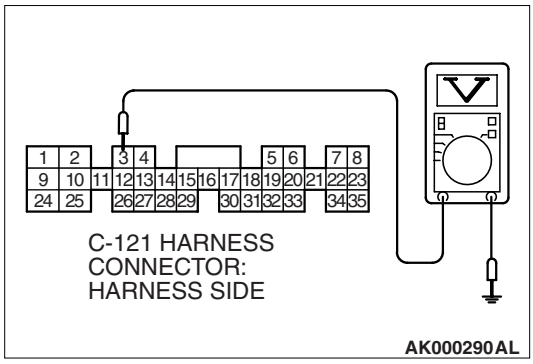

(3) Measure the voltage between terminal No. 3 and ground by backprobing.
- Voltage should be battery positive voltage.

(4) Turn the ignition switch to the "LOCK" (OFF) position.

Q: Is battery positive voltage (approximately 12 volts) present?

YES : Go to Step 8.
NO : Go to Step 6.

STEP 6. Check harness connector C-121 at ECM for damage.

Q: Is the harness connector in good condition?

YES : Go to Step 7.
NO : Repair or replace it. Refer to GROUP 00E, Harness Connector Inspection P.00E-2. Then go to Step 12.

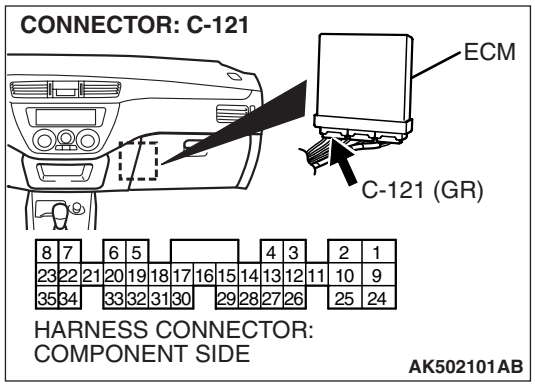

STEP 7. Check for open circuit or short circuit to ground between heated oxygen sensor (front) connector B-113 (terminal No. 3) and ECM connector C-121 (terminal No. 3).

Q: Is the harness wire in good condition?

YES : Replace the ECM. Then go to Step 12.

NO : Repair it. Then go to Step 12.

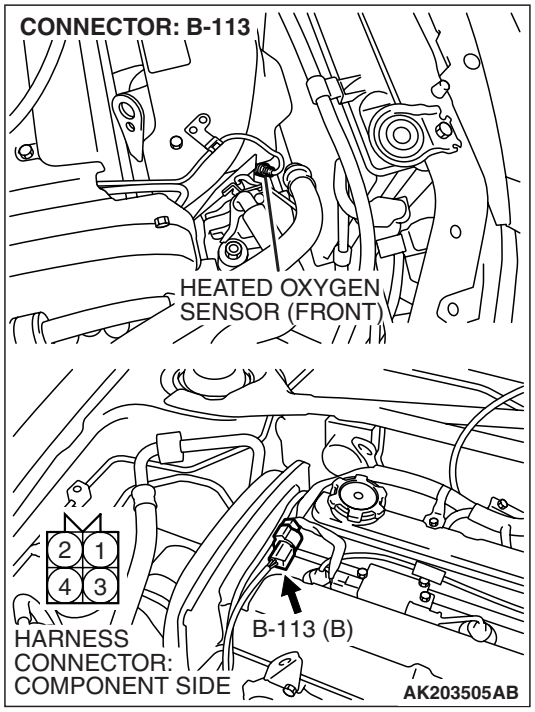

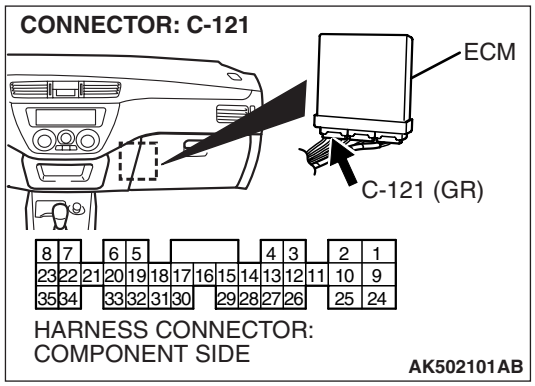

STEP 8. Check harness connector C-121 at ECM for damage.

Q: Is the harness connector in good condition?

YES : Go to Step 9.

NO : Repair or replace it. Refer to GROUP 00E, Harness Connector Inspection P.00E-2. Then go to Step 12.

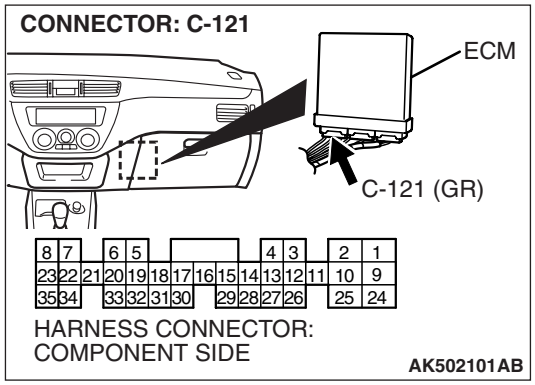

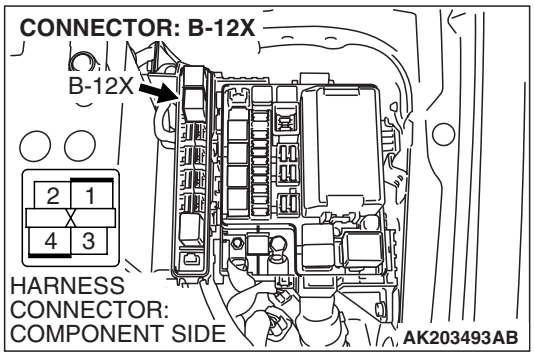

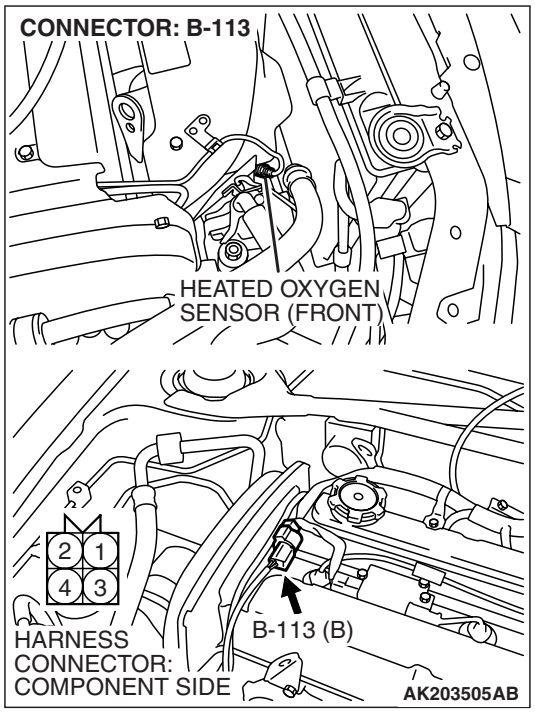

STEP 9. Check for harness damage between MFI relay connector B-12X (terminal No. 4) and heated oxygen sensor (front) connector B-113 (terminal No. 1).

Q: Is the harness wire in good condition?

YES : Go to Step 10.

NO : Repair it. Then go to Step 12.

STEP 10. Check for harness damage between heated oxygen sensor (front) connector B-113 (terminal No. 3) and ECM connector C-121 (terminal No. 3).

Q: Is the harness wire in good condition?

YES : Go to Step 11.

NO : Repair it. Then go to Step 12.

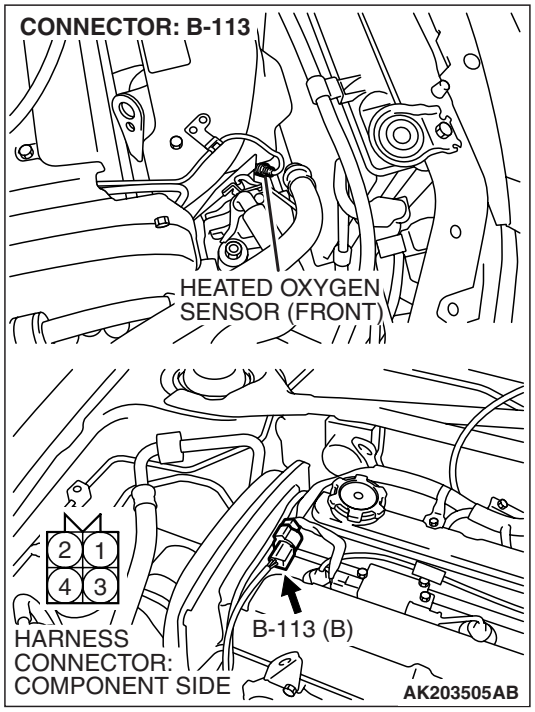

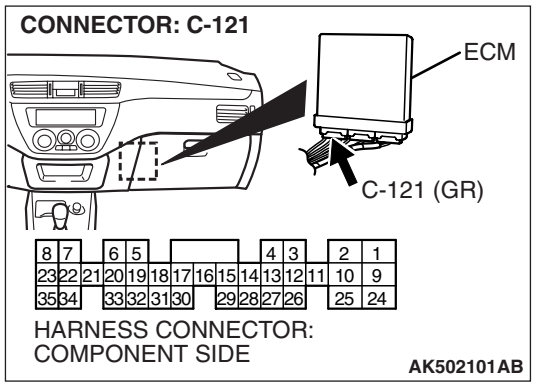

STEP 11. Check the trouble symptoms.

(1) Carry out a test drive with the drive cycle pattern. Refer to Diagnostic Function –OBD-II Drive Cycle –Pattern 2 P.13A-12.

(2) Check the diagnostic trouble code (DTC).

Q: Is DTC P0031 set?

YES : Replace the ECM. Then go to Step 12.

NO : It can be assumed that this malfunction is intermittent. Refer to GROUP 00, How to Use Troubleshooting/Inspection Service Points –How to Cope with Intermittent Malfunctions P.00-13.

STEP 12. Test the OBD-II drive cycle.

(1) Carry out a test drive with the drive cycle pattern. Refer to Diagnostic Function –OBD-II Drive Cycle –Pattern 2 P.13A-12.

(2) Check the diagnostic trouble code (DTC).

Q: Is DTC P0031 set?

YES : Retry the troubleshooting.

NO : The inspection is complete.

DTC P0032: Heated Oxygen Sensor Heater Control Circuit High (sensor 1)

Heated Oxygen Sensor (front) Heater Circuit

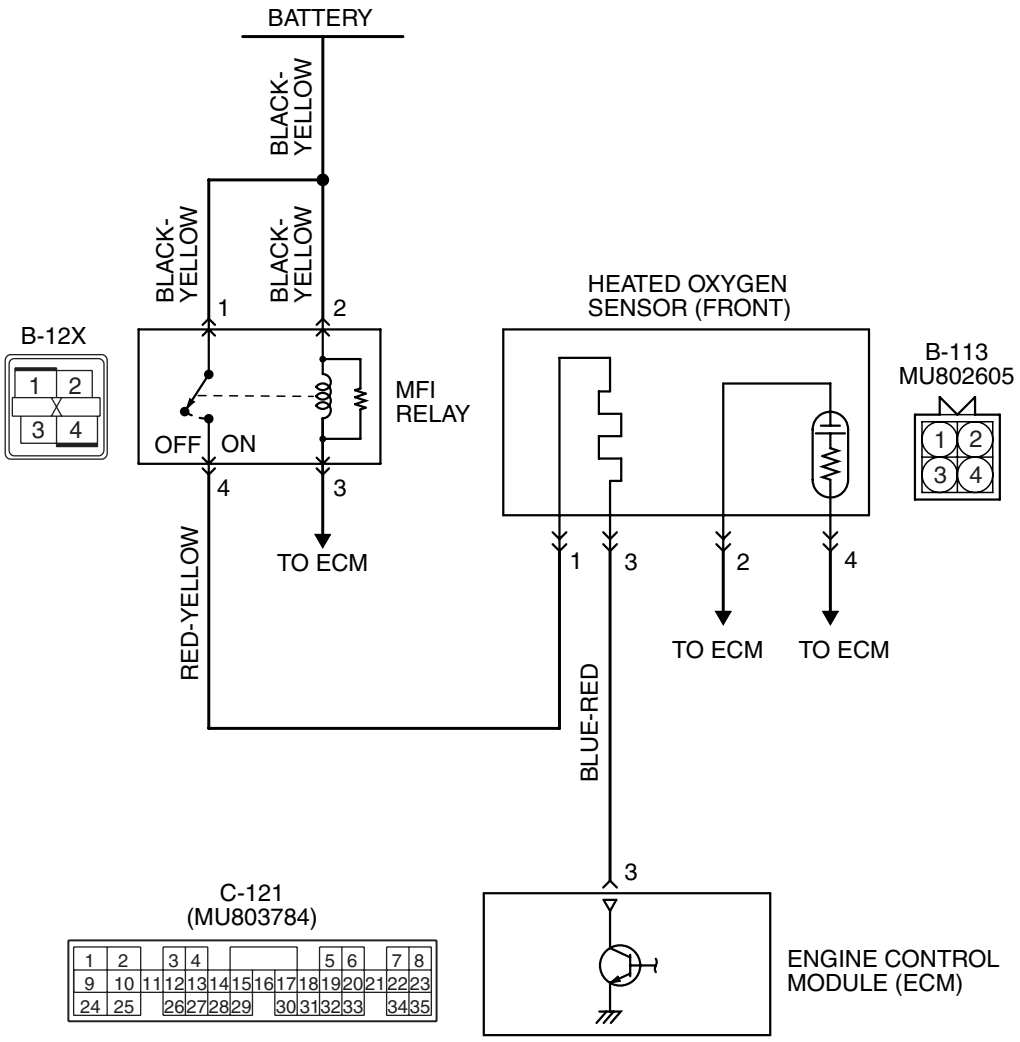

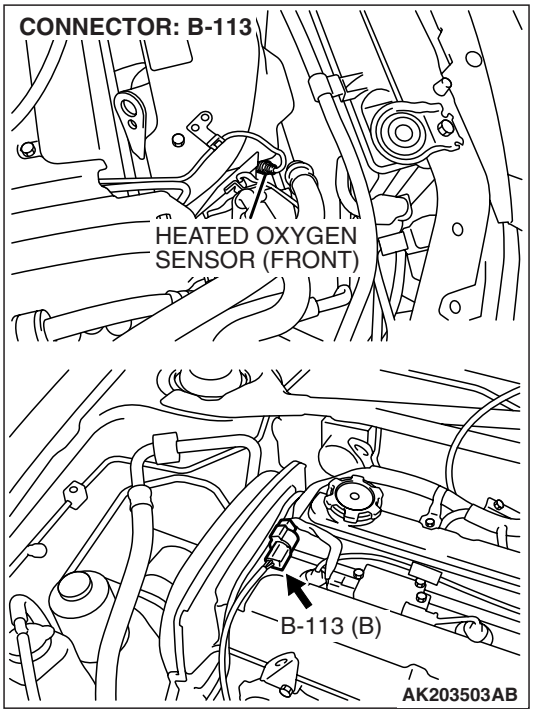

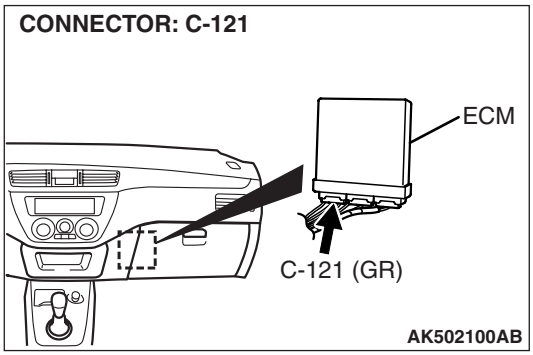

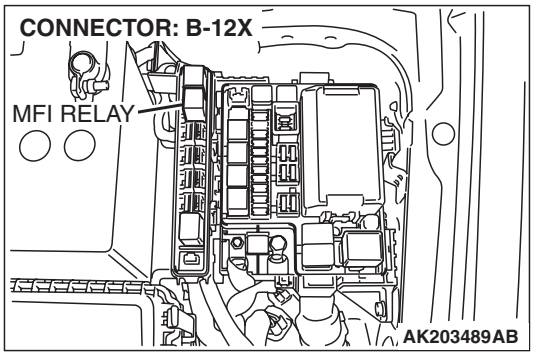

CIRCUIT OPERATION

- Power is supplied from the MFI relay (terminal No. 4) to the heated oxygen sensor (front) heater.
- The ECM (terminal No. 3) controls continuity to the heated oxygen sensor (front) heater by turning the power transistor in the ECM "ON" and "OFF".

TECHNICAL DESCRIPTION

- The ECM checks whether the heater current is within a specified range when the heater is energized.

DESCRIPTIONS OF MONITOR METHODS

Heated oxygen sensor heater (front) current is out of specified range.

MONITOR EXECUTION

Continuous

MONITOR EXECUTION CONDITIONS (Other monitor and Sensor)

Other Monitor (There is no temporary DTC stored in memory for the item monitored below)

- Not applicable

Sensor (The sensor below is determined to be normal)

- Engine coolant temperature sensor

DTC SET CONDITIONS

Logic Flow Chart

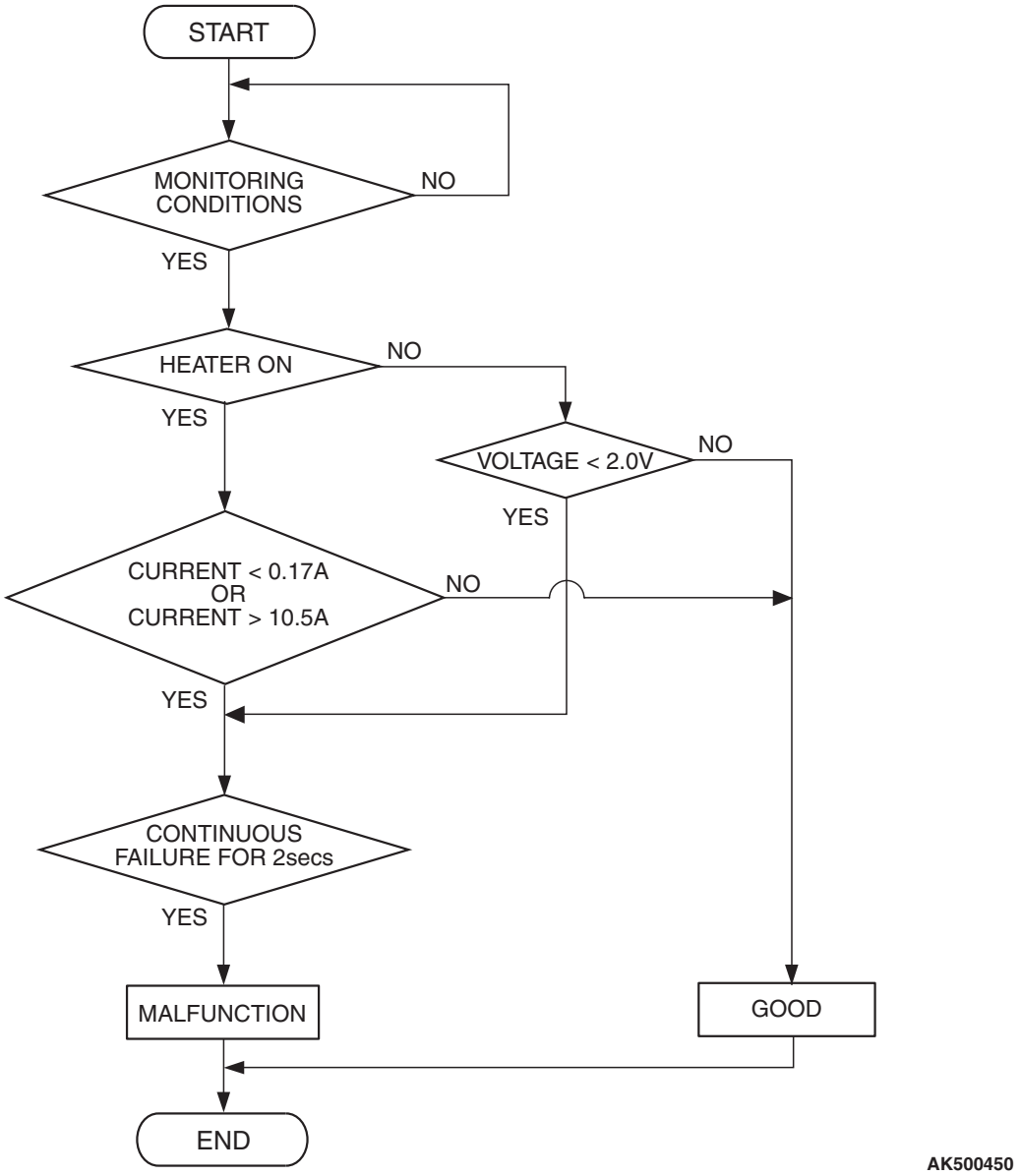

Check Conditions

- More than 2 seconds have passed since the engine starting sequence was completed.
- While the heated oxygen sensor (front) heater is on.
- Battery positive voltage is between 11 and 16.5 volts.

Judgement Criterion

- The heated oxygen sensor (front) heater current has continued to be higher than 10.5 ampere for 2 seconds.

OBD-II DRIVE CYCLE PATTERN

Refer to Diagnostic Function –OBD-II Drive Cycle – Pattern 2 P.13A-12.

TROUBLESHOOTING HINTS (The most likely causes for this code to be set are:)

- Open or shorted heated oxygen sensor (front) heater circuit, harness damage or connector damage.
- Open circuit in heated oxygen sensor (front) heater.
- ECM failed.

DIAGNOSIS

Required Special Tool:
- MD998464: Test Harness

STEP 1. Check the heated oxygen sensor (front).

(1) Disconnect heated oxygen sensor (front) connector B-113 and connect test harness special tool, MD998464, to the connector on the heated oxygen (front) sensor side.

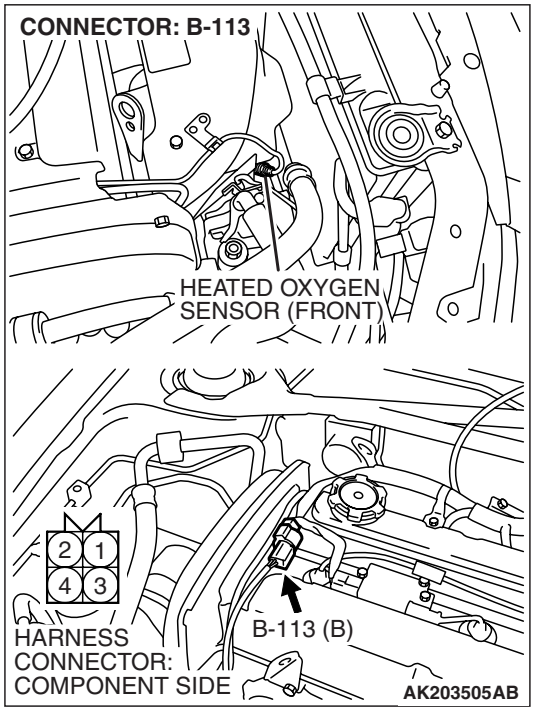

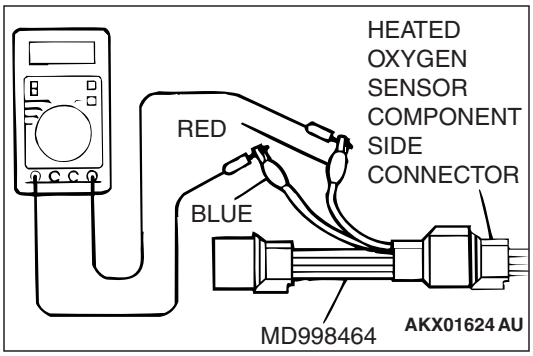

(2) Measure the resistance between heated oxygen sensor connector terminal No. 1 and terminal No. 3.

Standard value: 4.5 – 8.0 ohms [at 20° C (68° F)]

Q: Is the measured resistance between 4.5 and 8.0 ohms [at 20° C (68° F)]?

YES : Go to Step 2.

NO : Replace the heated oxygen sensor (front). Then go to Step 3.

STEP 2. Check the trouble symptoms.

(1) Carry out a test drive with the drive cycle pattern. Refer to Diagnostic Function –OBD-II Drive Cycle –Pattern 2 P.13A-12.

(2) Check the diagnostic trouble code (DTC).

Q: Is DTC P0032 set?

YES : Replace the ECM. Then go to Step 3.

NO : It can be assumed that this malfunction is intermittent. Refer to GROUP 00, How to Use Troubleshooting/Inspection Service Points –How to Cope with Intermittent Malfunctions P.00-13.

STEP 3. Test the OBD-II drive cycle.

(1) Carry out a test drive with the drive cycle pattern. Refer to Diagnostic Function –OBD-II Drive Cycle –Pattern 2 P.13A-12.

(2) Check the diagnostic trouble code (DTC).

Q: Is DTC P0032 set?

YES : Retry the troubleshooting.
NO : The inspection is complete.

DTC P0037: Heated Oxygen Sensor Heater Control Circuit Low (sensor 2)

Heated Oxygen Sensor (rear) Heater Circuit

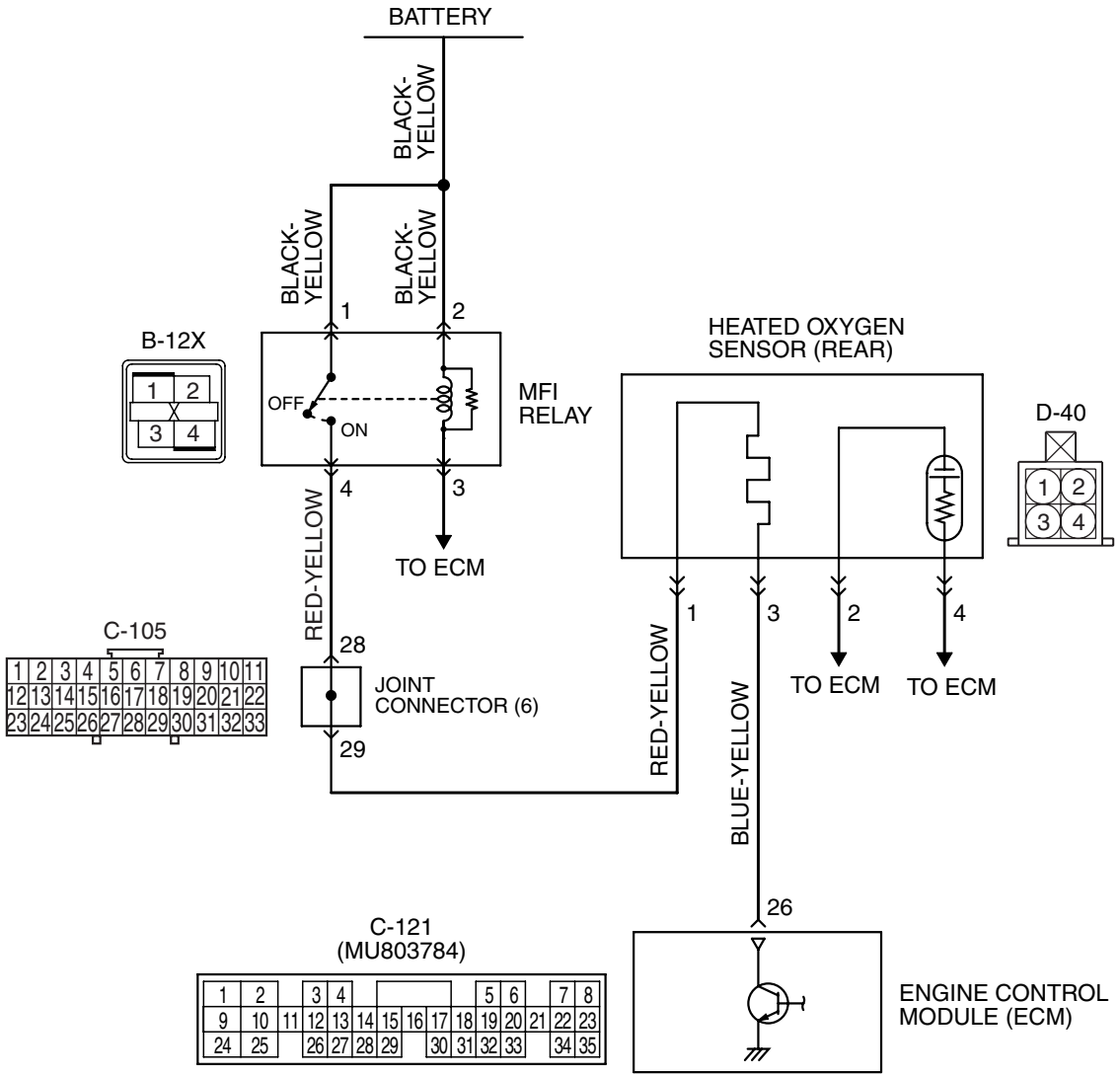

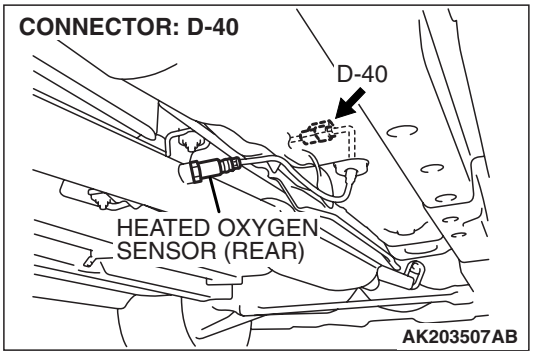

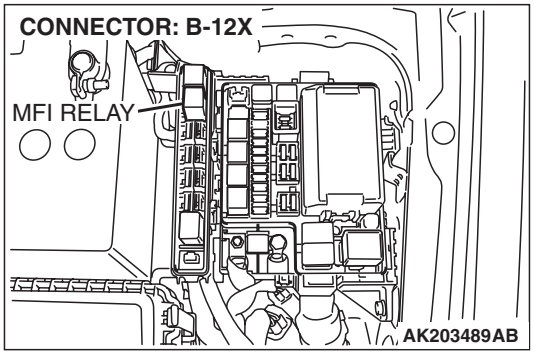

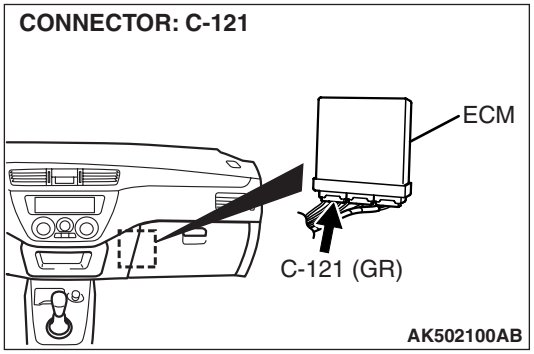

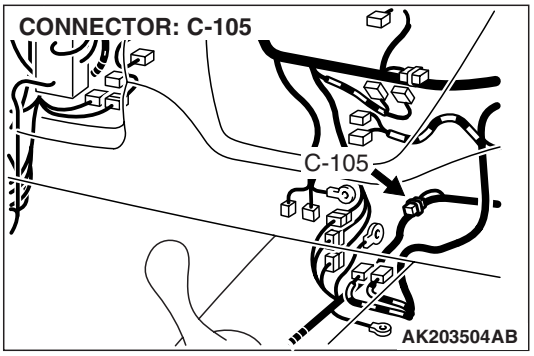

CIRCUIT OPERATION

- Power is supplied from the MFI relay (terminal No. 4) to the heated oxygen sensor (rear) heater.
- The ECM (terminal No. 26) controls continuity to the heated oxygen sensor (rear) heater by turning the power transistor in the ECM "ON" and "OFF".

TECHNICAL DESCRIPTION

- The ECM checks whether the heater current is within a specified range when the heater is energized.
- The ECM checks whether the heater voltage is within a specified range when the heater is not energized.

DESCRIPTIONS OF MONITOR METHODS

Heated oxygen sensor heater (rear) current or voltage is out of specified range.

MONITOR EXECUTION

Continuous

MONITOR EXECUTION CONDITIONS (Other monitor and Sensor)

Other Monitor (There is no temporary DTC stored in memory for the item monitored below)

- Not applicable

Sensor (The sensor below is determined to be normal)

- Engine coolant temperature sensor

DTC SET CONDITIONS

Logic Flow Chart

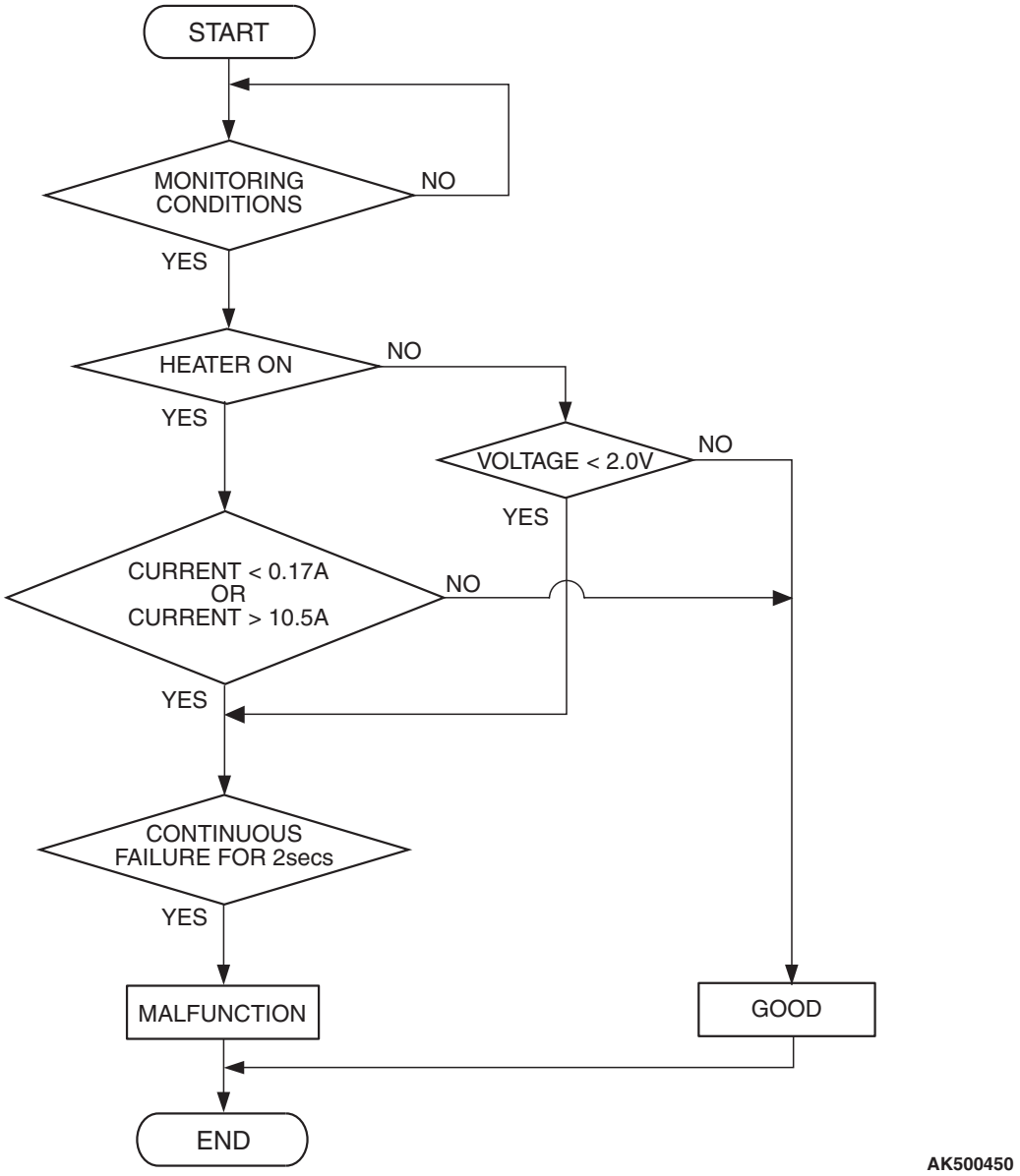

Check Conditions

- More than 2 seconds have passed since the engine starting sequence was completed.
- While the heated oxygen sensor (rear) heater is on.
- Battery positive voltage is between 11 and 16.5 volts.

Judgement Criterion

- The heated oxygen sensor (rear) heater current has continued to be lower than 0.17 ampere for 2 seconds.

Check Conditions

- More than 2 seconds have passed since the engine starting sequence was completed.
- While the heated oxygen sensor (rear) heater is off.
- Battery positive voltage is between 11 and 16.5 volts.

Judgement Criterion

- The heated oxygen sensor (rear) heater voltage has continued to be lower than 2.0 volts for 2 seconds.

OBD-II DRIVE CYCLE PATTERN

Refer to Diagnostic Function –OBD-II Drive Cycle – Pattern 2 P.13A-12.

TROUBLESHOOTING HINTS (The most likely causes for this code to be set are:)

- Open or shorted heated oxygen sensor (rear) heater circuit, harness damage or connector damage.
- Open circuit in heated oxygen sensor (rear) heater.
- ECM failed.

DIAGNOSIS

Required Special Tool:

- MB991658: Test Harness

STEP 1. Check harness connector D-40 at the heated oxygen sensor (rear) for damage.

Q: Is the harness connector in good condition?

YES : Go to Step 2.

NO : Repair or replace it. Refer to GROUP 00E, Harness Connector Inspection P.00E-2. Then go to Step 12.

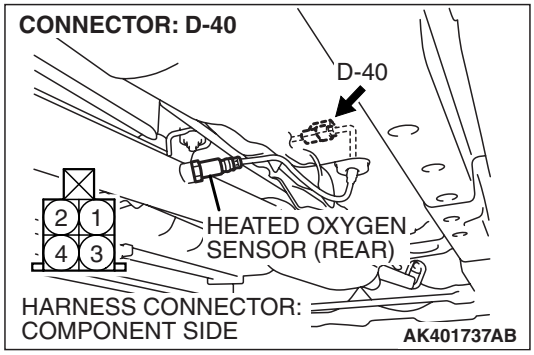

STEP 2. Check the heated oxygen sensor (rear).

(1) Disconnect heated oxygen sensor (rear) connector D-40 and connect test harness special tool, MB991658, to the connector on the heated oxygen (rear) sensor side.

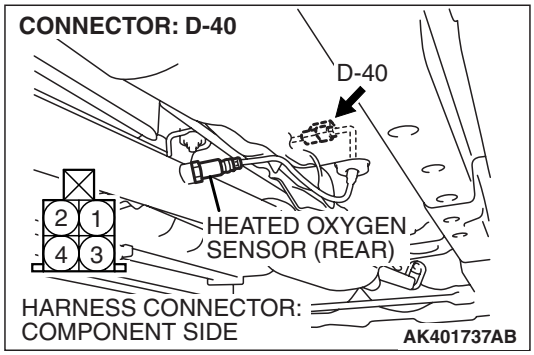

(2) Measure the resistance between heated oxygen sensor connector terminal No. 1 and terminal No. 3.

Standard value: 11 – 18 ohms [at 20°C (68°F)]

Q: Is the measured resistance between 11 and 18 ohms [at 20°C (60°F)]?

YES : Go to Step 3.

NO : Replace the heated oxygen sensor (rear). Then go to Step 12.

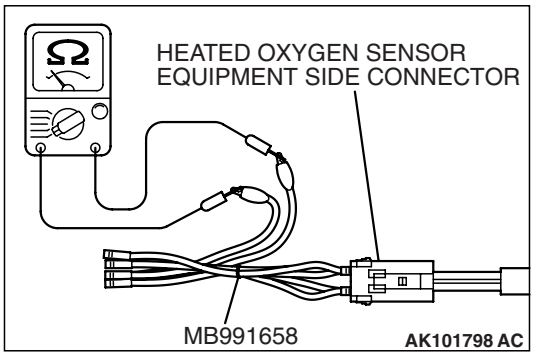

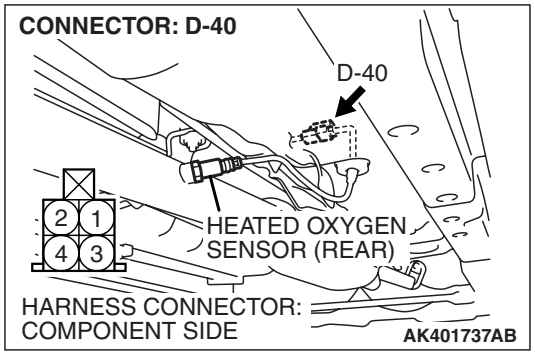

STEP 3. Measure the power supply voltage at heated oxygen sensor (rear) harness side connector D-40.

(1) Disconnect the connector D-40 and measure at the harness side.

(2) Turn the ignition switch to the "ON" position.

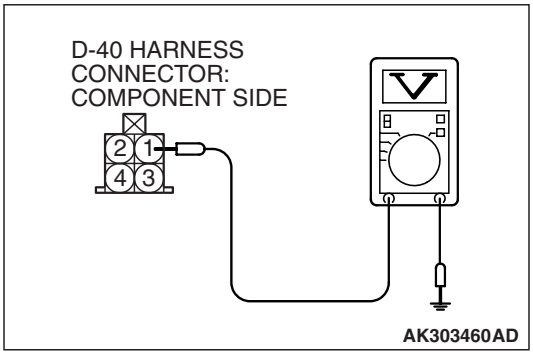

(3) Measure the voltage between terminal No. 1 and ground.
- Voltage should be battery positive voltage.

(4) Turn the ignition switch to the "LOCK" (OFF) position.

Q: Is battery positive voltage (approximately 12 volts) present?

YES : Go to Step 5.

NO : Go to Step 4.

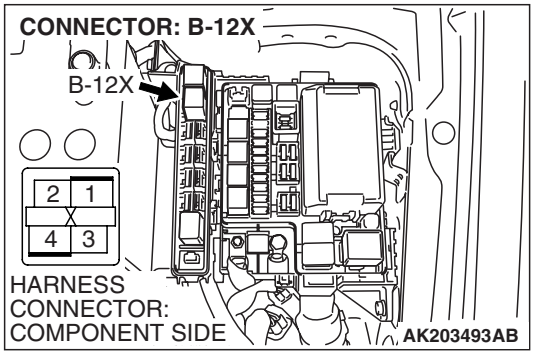

STEP 4. Check harness connector B-12X at the MFI relay for damage.

Q: Is the harness connector in good condition?

YES : Check harness connector C-105 at intermediate connector for damage, and repair or replace as required. Refer to GROUP 00E, Harness Connector Inspection P.00E-2. If intermediate connector is in good condition, repair harness wire between MFI relay connector B-12X (terminal No. 4) and heated oxygen sensor (rear) connector D-40 (terminal No. 1) because of open circuit or short circuit to ground. Then go to Step 12.

NO : Repair or replace it. Refer to GROUP 00E, Harness Connector Inspection P.00E-2. Then go to Step 12.

STEP 5. Measure the power supply voltage at ECM harness side connector C-121 by backprobing.

(1) Do not disconnect the connector C-121.
(2) Turn the ignition switch to the "ON" position.

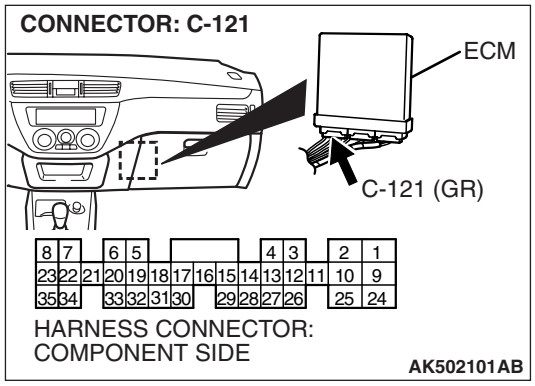

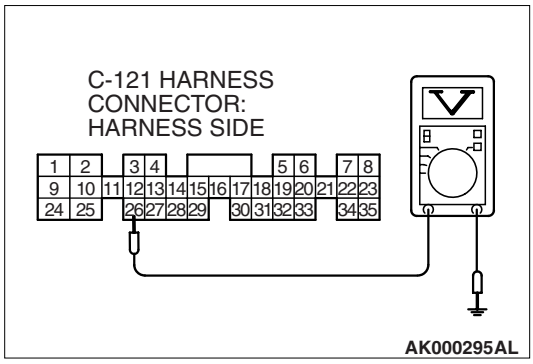

(3) Measure the voltage between terminal No. 26 and ground by backprobing.
- Voltage should be battery positive voltage.

(4) Turn the ignition switch to the "LOCK" (OFF) position.

Q: Is battery positive voltage (approximately 12 volts) present?

YES : Go to Step 8.
NO : Go to Step 6.

STEP 6. Check harness connector C-121 at ECM for damage.

Q: Is the harness connector in good condition?

YES : Go to Step 7.
NO : Repair or replace it. Refer to GROUP 00E, Harness Connector Inspection P.00E-2. Then go to Step 12.

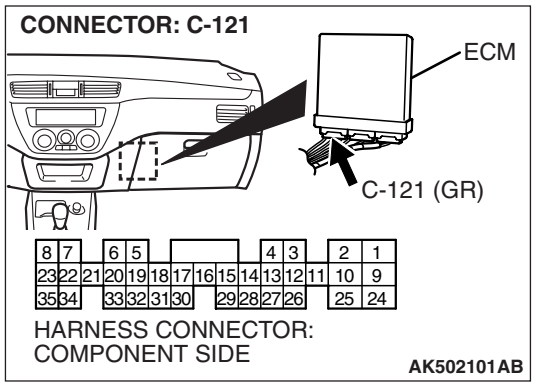

STEP 7. Check for open circuit or short circuit to ground between heated oxygen sensor (rear) connector D-40 (terminal No. 3) and ECM connector C-121 (terminal No. 26).

Q: Is the harness wire in good condition?

YES : Replace the ECM. Then go to Step 12.

NO : Repair it. Then go to Step 12.

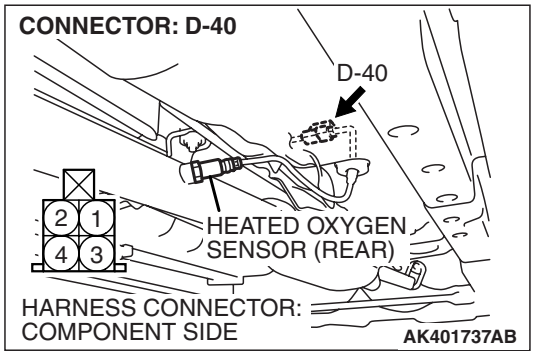

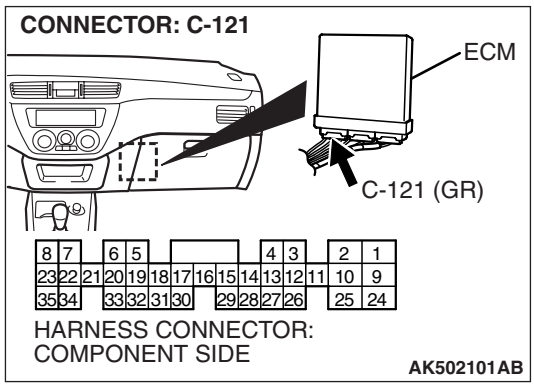

STEP 8. Check harness connector C-121 at ECM for damage.

Q: Is the harness connector in good condition?

YES : Go to Step 9.

NO : Repair or replace it. Refer to GROUP 00E, Harness Connector Inspection P.00E-2. Then go to Step 12.

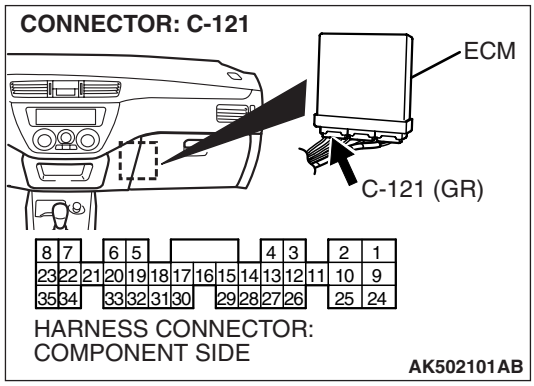

STEP 9. Check for harness damage between MFI relay connector B-12X (terminal No. 4) and heated oxygen sensor (rear) connector D-40 (terminal No. 1).

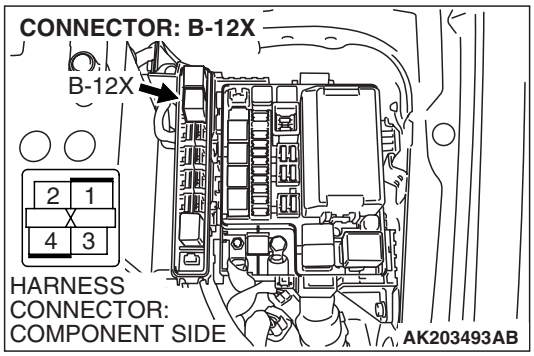

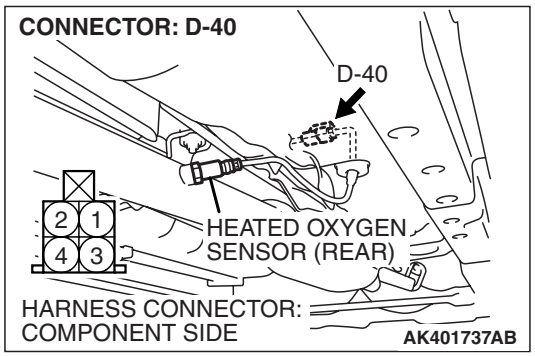

NOTE: Check harness after checking intermediate connector C-105. If intermediate connector is damaged, repair or replace it. Refer to GROUP 00E, Harness Connector Inspection P.00E-2. Then go to Step 12.

Q: Is the harness wire in good condition?

YES : Go to Step 10.
NO : Repair it. Then go to Step 12.

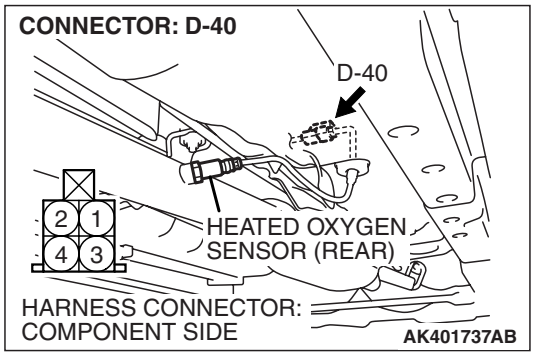

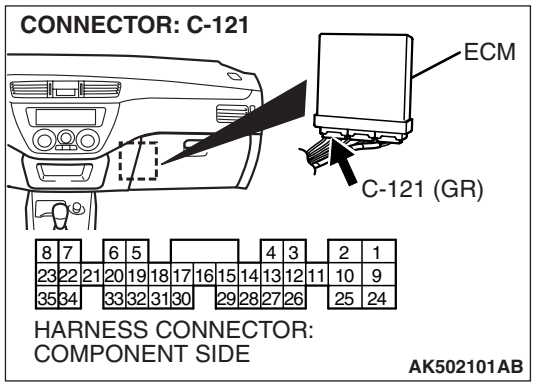

STEP 10. Check for harness damage between heated oxygen sensor (rear) connector D-40 (terminal No. 3) and ECM connector C-121 (terminal No. 26).

Q: Is the harness wire in good condition?

YES : Go to Step 11.

NO : Repair it. Then go to Step 12.

STEP 11. Check the trouble symptoms.

(1) Carry out a test drive with the drive cycle pattern. Refer to Diagnostic Function –OBD-II Drive Cycle –Pattern 2 P.13A-12.

(2) Check the diagnostic trouble code (DTC).

Q: Is DTC P0037 set?

YES : Replace the ECM. Then go to Step 12.

NO : It can be assumed that this malfunction is intermittent. Refer to GROUP 00, How to Use Troubleshooting/Inspection Service Points –How to Cope with Intermittent Malfunctions P.00-13.

STEP 12. Test the OBD-II drive cycle.

(1) Carry out a test drive with the drive cycle pattern. Refer to Diagnostic Function –OBD-II Drive Cycle –Pattern 2 P.13A-12.

(2) Check the diagnostic trouble code (DTC).

Q: Is DTC P0037 set?

YES : Retry the troubleshooting.

NO : The inspection is complete.

DTC P0038: Heated Oxygen Sensor Heater Control Circuit High (sensor 2)

Heated Oxygen Sensor (rear) Heater Circuit

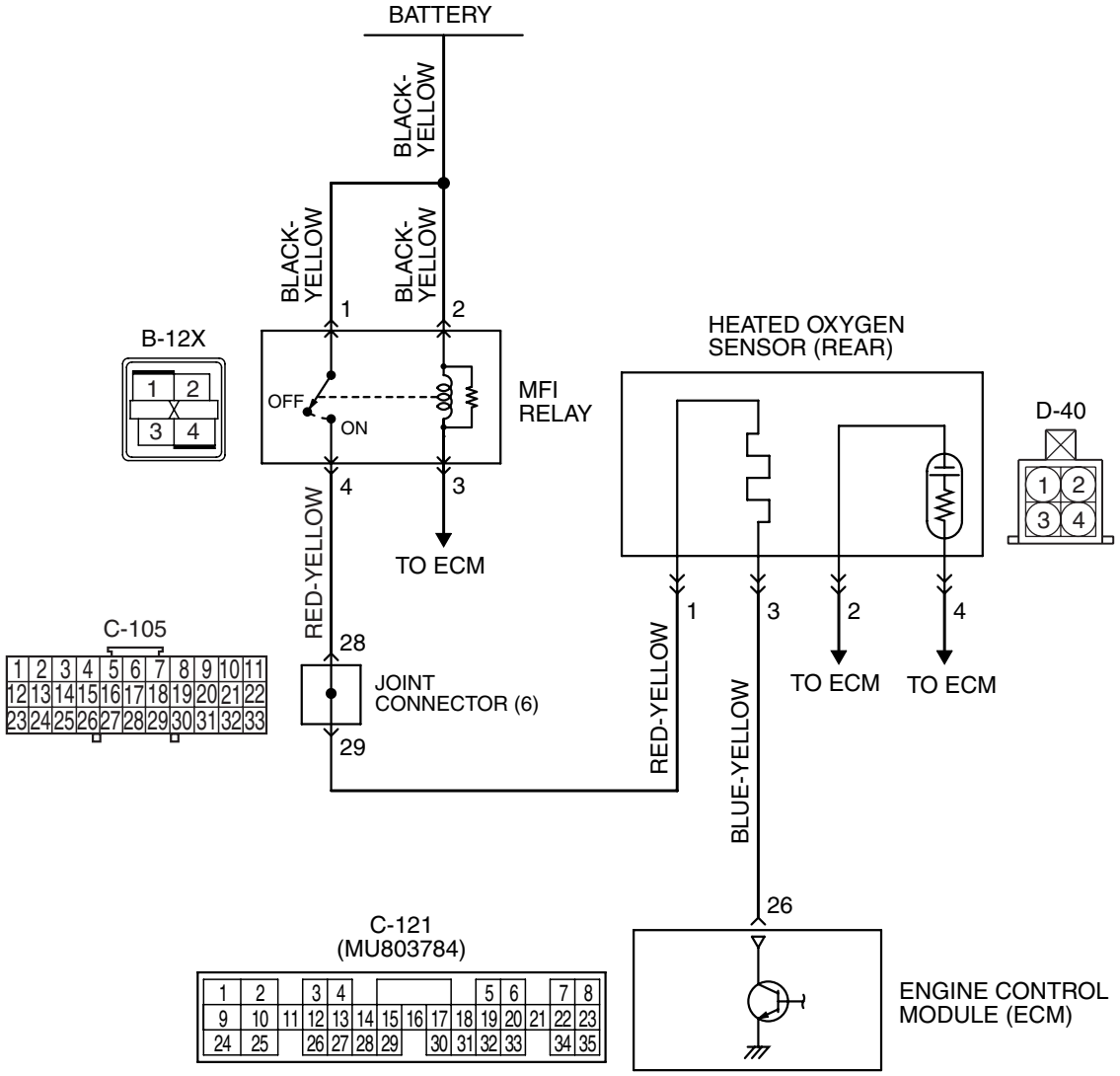

AK502059

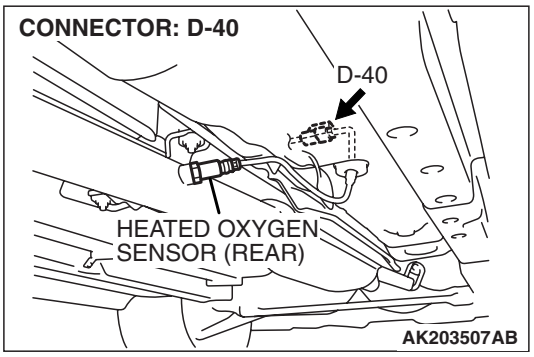

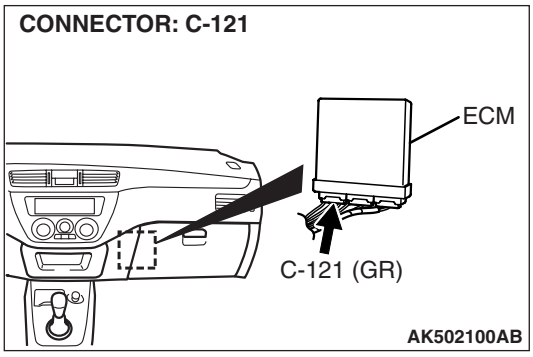

TSB Revision

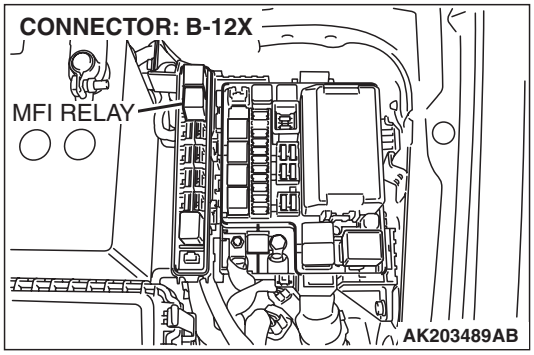

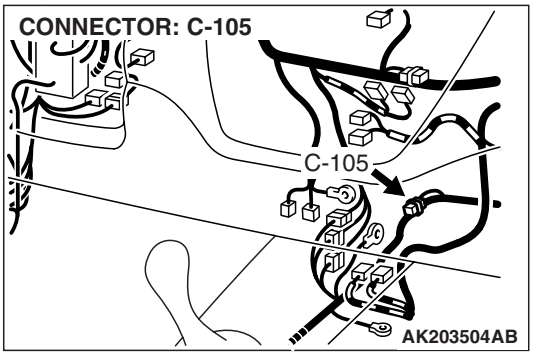

CIRCUIT OPERATION

- Power is supplied from the MFI relay (terminal No. 4) to the heated oxygen sensor (rear) heater.
- The ECM (terminal No. 26) controls continuity to the heated oxygen sensor (rear) heater by turning the power transistor in the ECM "ON" and "OFF".

TECHNICAL DESCRIPTION

- The ECM checks whether the heater current is within a specified range when the heater is energized.

DESCRIPTIONS OF MONITOR METHODS

Heated oxygen sensor heater (rear) current is out of specified range.

MONITOR EXECUTION

Continuous

MONITOR EXECUTION CONDITIONS (Other monitor and Sensor)

Other Monitor (There is no temporary DTC stored in memory for the item monitored below)

- Not applicable

Sensor (The sensor below is determined to be normal)

- Engine coolant temperature sensor

DTC SET CONDITIONS

Logic Flow Chart

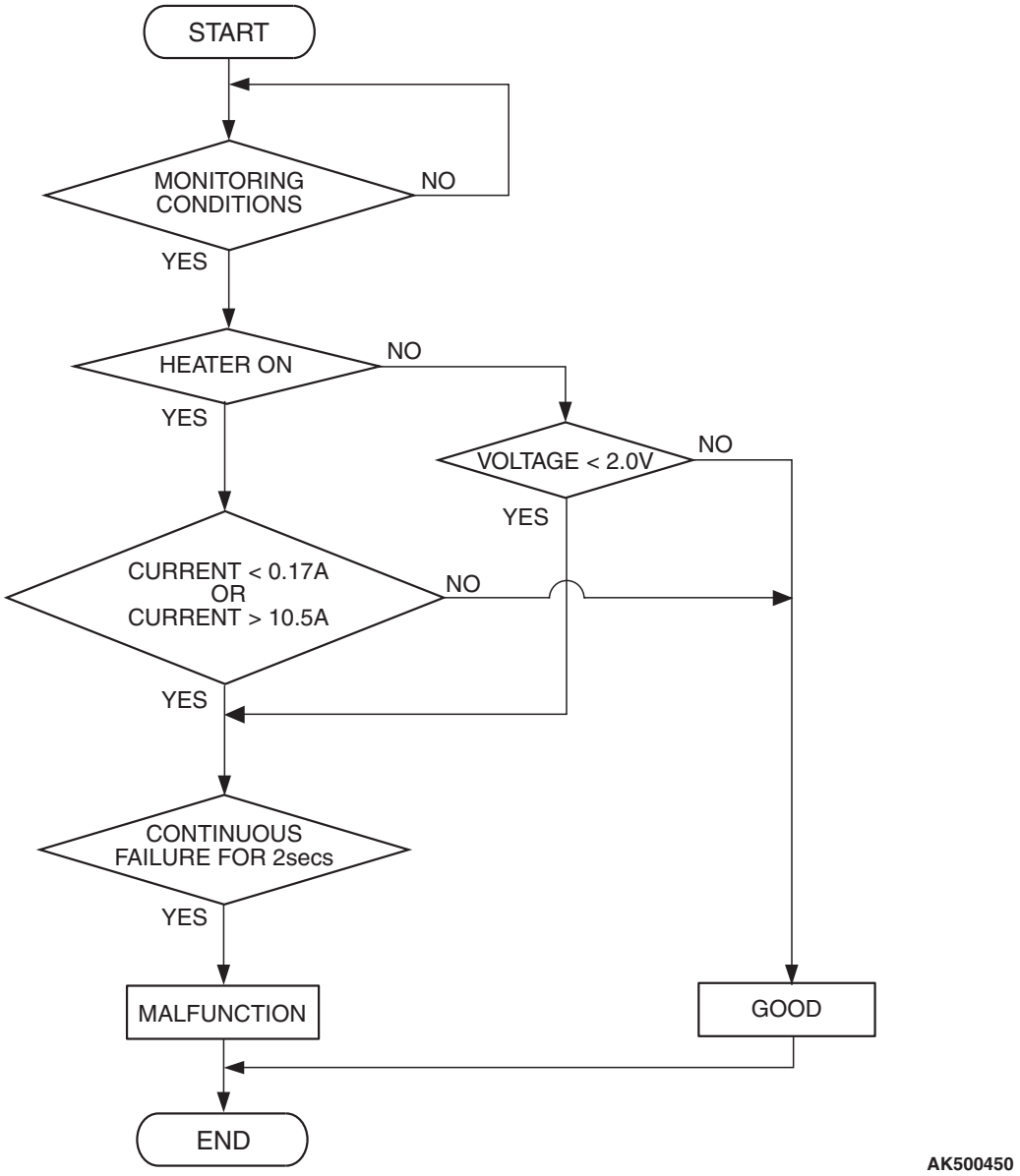

Check Conditions

- More than 2 seconds have passed since the engine starting sequence was completed.
- While the heated oxygen sensor (rear) heater is on.
- Battery positive voltage is between 11 and 16.5 volts.

Judgement Criterion

- The heated oxygen sensor (rear) heater current has continued to be higher than 10.5 ampere for 2 seconds.

OBD-II DRIVE CYCLE PATTERN

Refer to Diagnostic Function –OBD-II Drive Cycle – Pattern 2 P.13A-12.

TROUBLESHOOTING HINTS (The most likely causes for this code to be set are:)

- Open or shorted heated oxygen sensor (rear) heater circuit, harness damage or connector damage.
- Open circuit in heated oxygen sensor (rear) heater.
- ECM failed.

DIAGNOSIS

Required Special Tool:
- MB991658: Test Harness

STEP 1. Check the heated oxygen sensor (rear).

(1) Disconnect heated oxygen sensor (rear) connector D-40 and connect test harness special tool, MB991658, to the connector on the heated oxygen (rear) sensor side.

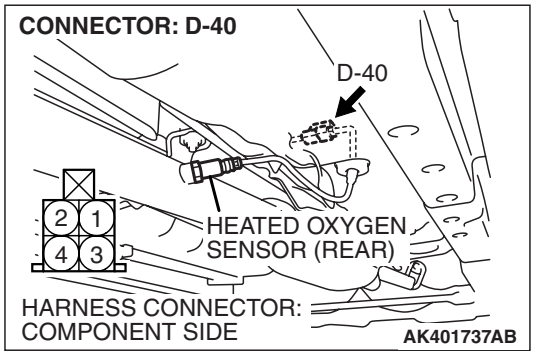

(2) Measure the resistance between heated oxygen sensor connector terminal No. 1 and terminal No. 3.

Standard value: 11 – 18 ohms [at 20°C (68°F)]

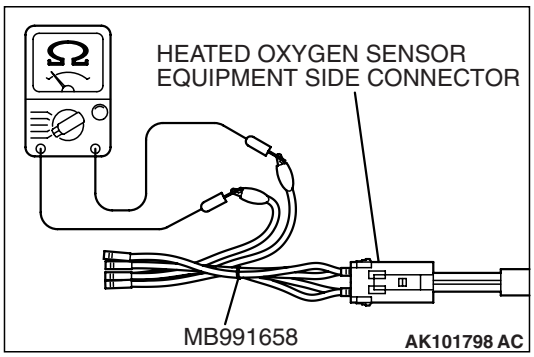

Q: Is the measured resistance between 11 and 18 ohms [at 20°C (60°F)]?

YES : Go to Step 2.

NO : Replace the heated oxygen sensor (rear). Then go to Step 3.

STEP 2. Check the trouble symptoms.

(1) Carry out a test drive with the drive cycle pattern. Refer to Diagnostic Function –OBD-II Drive Cycle –Pattern 2 P.13A-12.

(2) Check the diagnostic trouble code (DTC).

Q: Is DTC P0038 set?

YES : Replace the ECM. Then go to Step 3.

NO : It can be assumed that this malfunction is intermittent. Refer to GROUP 00, How to Use Troubleshooting/Inspection Service Points –How to Cope with Intermittent Malfunctions P.00-13.

STEP 3. Test the OBD-II drive cycle.

(1) Carry out a test drive with the drive cycle pattern. Refer to Diagnostic Function –OBD-II Drive Cycle –Pattern 2 P.13A-12.

(2) Check the diagnostic trouble code (DTC).

Q: Is DTC P0038 set?

YES : Retry the troubleshooting.

NO : The inspection is complete.

DTC P0069: Abnormal Correlation Between Manifold Absolute Pressure Sensor And Barometric Pressure Sensor

TECHNICAL DESCRIPTION

- The ECM detects abnormality in the sensor by comparing the manifold absolute pressure sensor output with the barometric pressure sensor output.

DESCRIPTIONS OF MONITOR METHODS

The ECM compares the manifold absolute pressure sensor output with the barometric pressure sensor output while the engine control relay is in "ON" position after the ignition switch is in "LOCK" (OFF) position. When the difference exceeds the specified value between them, the ECM determines whether the manifold absolute pressure sensor / the barometric pressure sensor has malfunction or not.

MONITOR EXECUTION

Continuous

MONITOR EXECUTION CONDITIONS (Other monitor and Sensor)

Other Monitor (There is no temporary DTC stored in memory for the item monitored below)

- Not applicable

Sensor (The sensor below is determined to be normal)

- Not applicable

DTC SET CONDITIONS

Logic Flow Chart

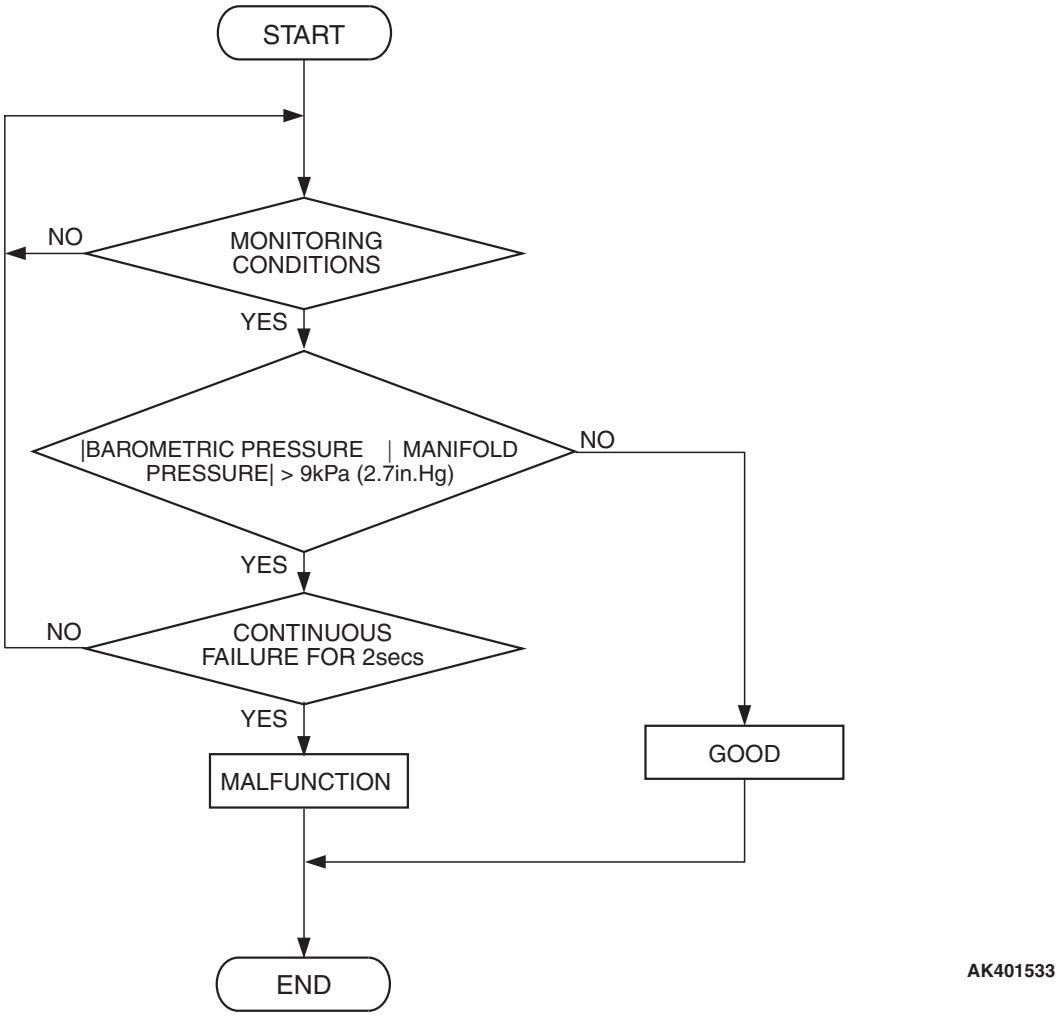

Check Conditions

- Ignition switch is in "LOCK" (OFF) position.
- After 2 seconds pass from the time when the engine is stopped.
- Engine coolant temperature is higher than 0° C (32° F).

Judgment Criterion

- Difference between manifold absolute pressure sensor output and barometric pressure sensor output is more than 9 kPa (2.7 in.Hg) for 2 seconds.

OBD-II DRIVE CYCLE PATTERN

None.

TROUBLESHOOTING HINTS (The most likely causes for this code to be set are:)

- Manifold absolute pressure sensor failed.
- Barometric pressure sensor failed.
- ECM failed.

DIAGNOSIS

Required Special Tools

- MB991958: Scan tool (M.U.T.-III Sub Assembly)
  - MB991824: V.C.I.
  - MB991827: USB Cable
  - MB991911: Main Harness B

STEP 1. Using scan tool MB991958, read the diagnostic trouble code (DTC).

⚠ CAUTION

To prevent damage to scan tool MB991958, always turn the ignition switch to the "LOCK" (OFF) position before connecting or disconnecting scan tool MB991958.

(1) Connect scan tool MB991958 to the data link connector.
(2) Turn the ignition switch to the "ON" position.
(3) Set scan tool MB991958, read the DTC.
(4) Turn the ignition switch to the "LOCK" (OFF) position.

Q: Is the diagnostic trouble code other than P0069 set?

YES : Refer to, Diagnostic Trouble Code Chart P.13A-41.
NO : Go to Step 2.

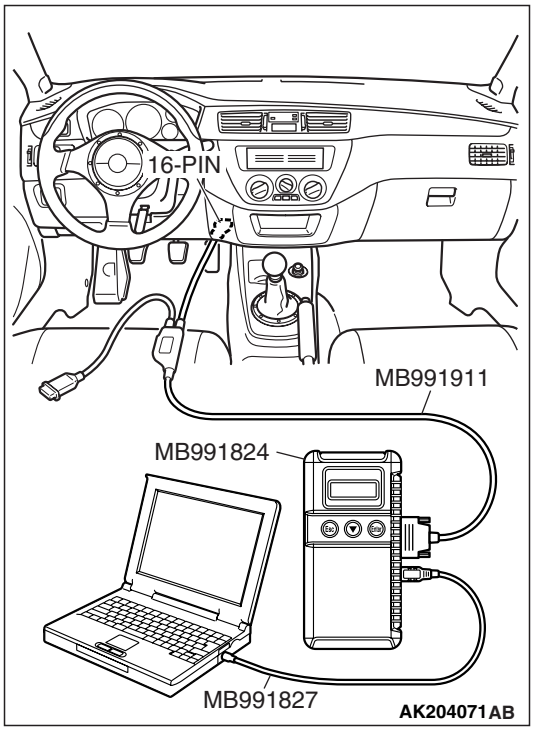

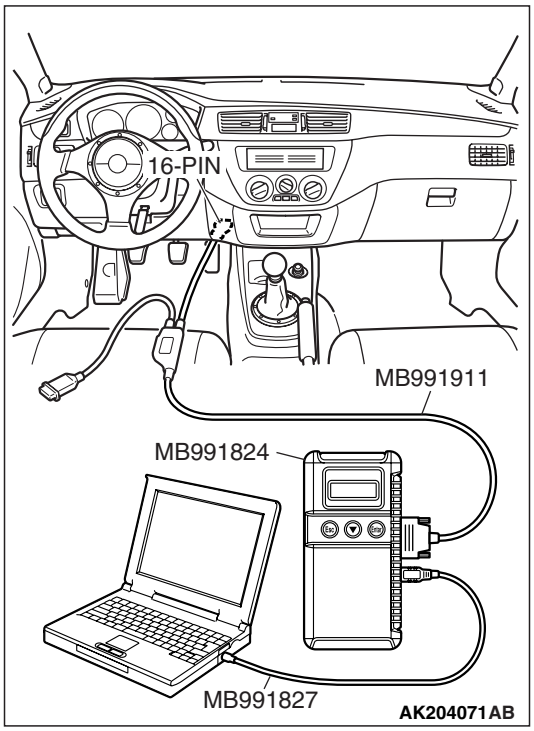

STEP 2. Using scan tool MB991958, check data list item 95: Manifold Absolute Pressure Sensor.

(1) Turn the ignition switch to the "ON" position.

(2) Set scan tool MB991958 to the data reading mode for item 95, Manifold Absolute Pressure Sensor.
- When altitude is 0 m (0 foot), 101 kPa (29.8 in.Hg).
- When altitude is 600 m (1,969 feet), 95 kPa (28.1 in.Hg).
- When altitude is 1,200 m (3,937 feet), 88 kPa (26.0 in.Hg).
- When altitude is 1,800 m (5,906 feet), 81 kPa (23.9 in.Hg).

(3) Start the engine.
- When the engine is idling, 31 – 45 kPa (9.1 – 13.2 in.Hg).
- When the engine is suddenly revved, manifold absolute pressure varies.

(4) Turn the ignition switch to the "LOCK" (OFF) position.

Q: Is the sensor operating properly?

YES : Go to Step 3.

NO : Refer to, DTC P0106 –Manifold Absolute Pressure Circuit Range/Performance Problem P.13A-107, DTC P0107 –Manifold Absolute Pressure Circuit Low Input P.13A-116, DTC P0108 –Manifold Absolute Pressure Circuit High Input P.13A-129.

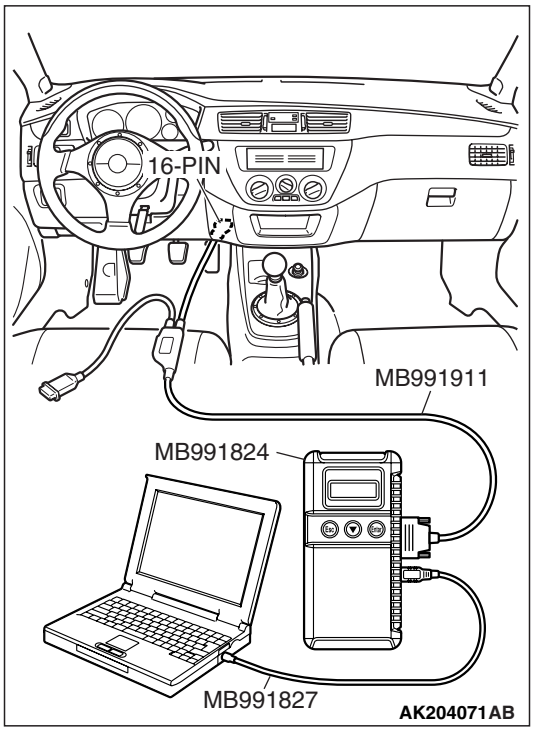

STEP 3. Using scan tool MB991958, check data list item 25: Barometric Pressure Sensor.

(1) Start the engine and run at idle.

(2) Set scan tool MB991958 to the data reading mode for item 25, Barometric Pressure Sensor.
- When altitude is 0 m (0 foot), 101 kPa (29.8 in.Hg).
- When altitude is 600 m (1,969 feet), 95 kPa (28.1 in.Hg).
- When altitude is 1,200 m (3,937 feet), 88 kPa (26.0 in.Hg).
- When altitude is 1,800 m (5,906 feet), 81 kPa (23.9 in.Hg).

(3) Turn the ignition switch to the "LOCK" (OFF) position.

Q: Is the sensor operating properly?

YES : Go to Step 4.

NO : Refer to, DTC P2228 –Barometric Pressure Circuit Low Input P.13A-667, DTC P2229 –Barometric Pressure Circuit High Input P.13A-679.

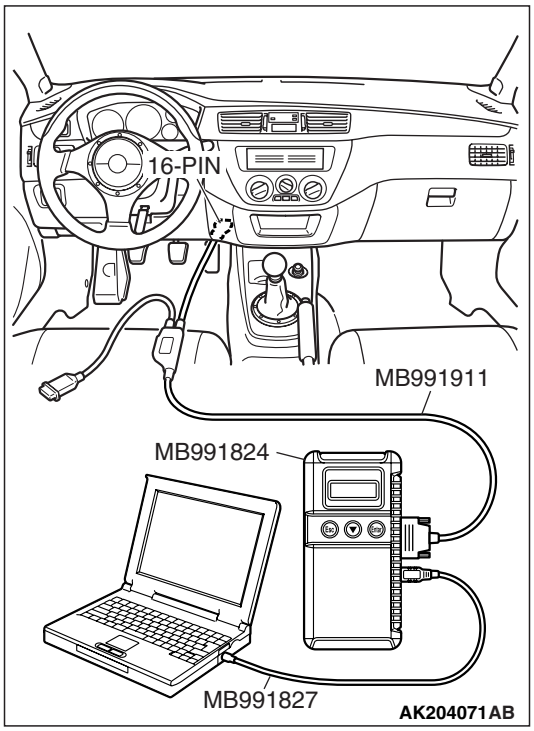

STEP 4. Using scan tool MB991958, read the diagnostic trouble code (DTC).

(1) Turn the ignition switch to the "ON" position.
(2) Erase the DTC.
(3) Start the engine.
(4) Turn the ignition switch to "LOCK" (OFF) position and then wait 2 seconds.
(5) Turn the ignition switch to the "ON" position.
(6) Set scan tool MB991958, read the DTC.
(7) Turn the ignition switch to the "LOCK" (OFF) position.

Q: Is DTC P0069 set?

YES : Replace the ECM. Then go to Step 5.
NO : It can be assumed that this malfunction is intermittent. Refer to GROUP 00, How to Use Troubleshooting/Inspection Service Points –How to Cope with Intermittent Malfunctions P.00-13.

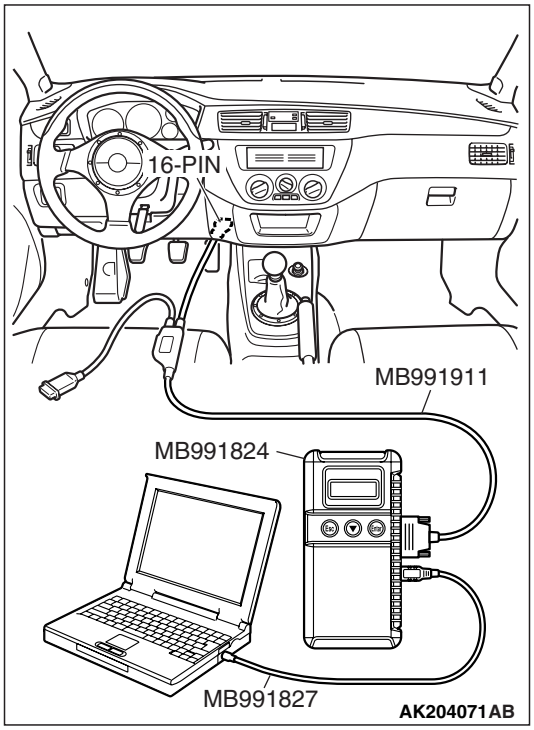

STEP 5. Using scan tool MB991958, read the diagnostic trouble code (DTC).

(1) Turn the ignition switch to the "ON" position.
(2) Erase the DTC.
(3) Start the engine.
(4) Turn the ignition switch to "LOCK" (OFF) position and then wait 2 seconds.
(5) Turn the ignition switch to the "ON" position.
(6) Set scan tool MB991958, read the DTC.
(7) Turn the ignition switch to the "LOCK" (OFF) position.

Q: Is DTC P0069 set?

YES : Retry the troubleshooting.
NO : The inspection is complete.

DTC P0090: Fuel Pressure Solenoid Circuit

Fuel Pressure Solenoid Circuit

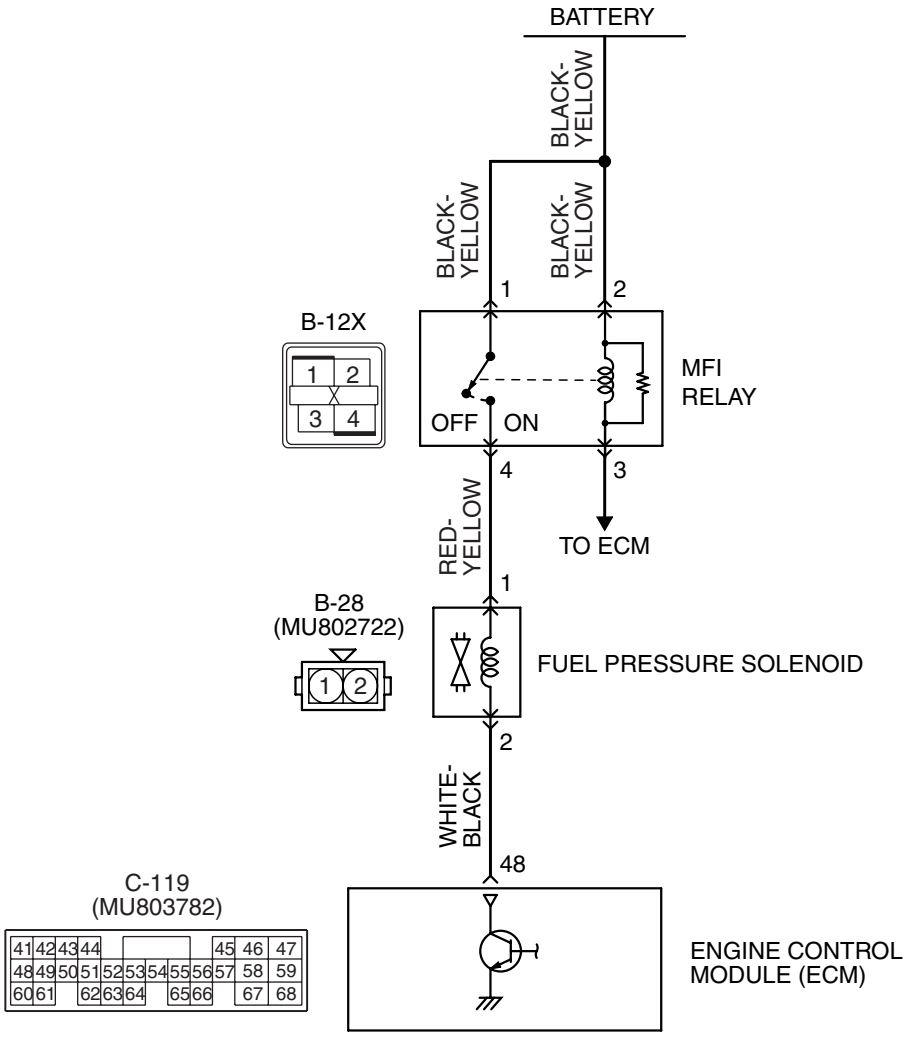

AK502060

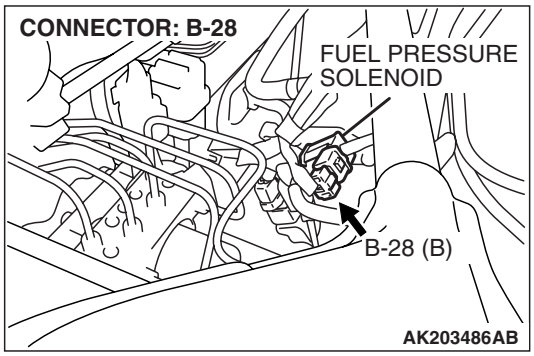

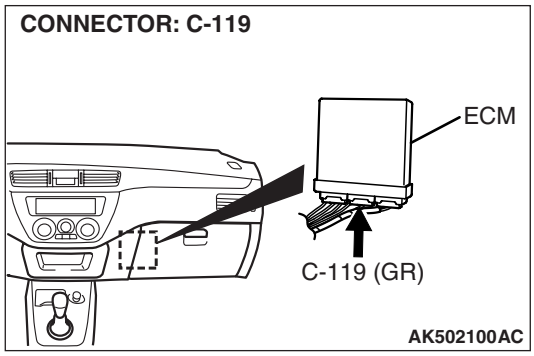

TSB Revision

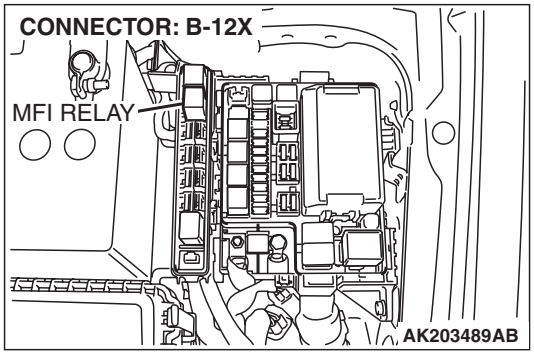

CIRCUIT OPERATION

- The fuel pressure solenoid power is supplied from the MFI relay (terminal No. 4).
- The ECM controls the fuel pressure solenoid ground by turning the power transistor in the ECM "ON" and "OFF".

TECHNICAL DESCRIPTION

- To judge if there is open circuit in the fuel pressure solenoid drive circuit, ECM measures the surge voltage of the fuel pressure solenoid coil.
- The ECM drives the fuel pressure solenoid. After the solenoid is turned off, the ECM will check if the solenoid coil produces a surge voltage of 2 volts or more.

DESCRIPTIONS OF MONITOR METHODS

- If a surge current is not generated in the coil after the fuel pressure solenoid has been actuated, an open circuit is determined to have occurred.

MONITOR EXECUTION

- Continuous

MONITOR EXECUTION CONDITIONS (Other monitor and Sensor)

Other Monitor (There is no temporary DTC stored in memory for the item monitored below)

- Not applicable

Sensor (The sensor below is determined to be normal)

- Not applicable

DTC SET CONDITIONS

Logic Flow Chart

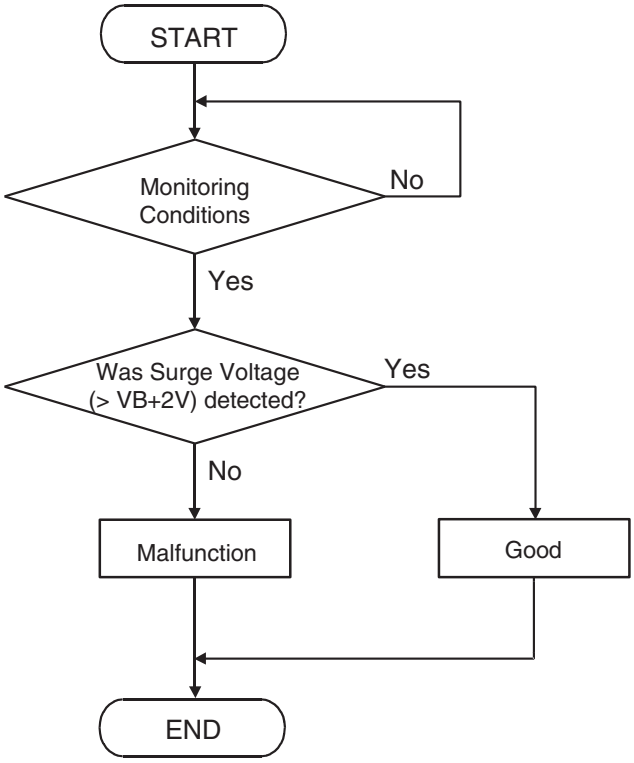

AK305546

Check Conditions

- Engine is being cranked.
- Battery positive voltage is at between 10 and 16.5 volts.

Judgment Criteria

- The fuel pressure solenoid coil surge voltage (battery positive voltage + 2 volts) is not detected for 0.2 second.
- The ECM monitors for this condition once during the drive cycle.

Check Conditions

- Battery positive voltage is at between 10 and 16.5 volts.
- Fuel pressure solenoid is ON.
- ON duty cycle of the turbocharger wastegate solenoid is 0 percent.
- More than 1 second has elapsed after the above mentioned conditions have been met.

Judgment Criterion

- The fuel pressure solenoid coil surge voltage (battery positive voltage + 2 volts) is not detected for 1 second. When the fuel pressure solenoid is turned OFF.

OBD-II DRIVE CYCLE PATTERN

Refer to Diagnostic Function –OBD-II Drive Cycle – Pattern 23 P.13A-12.

TROUBLESHOOTING HINTS (The most likely causes for this code to be set are:)

- Fuel pressure solenoid failed.
- Open or shorted fuel pressure solenoid circuit, harness damage, or connector damage.
- ECM failed.

DIAGNOSIS

Required Special Tools:

- MB991958: Scan Tool (M.U.T.-III Sub Assembly)
  - MB991824: V.C.I.
  - MB991827: USB Cable
  - MB991911: Main Harness B

STEP 1. Using scan tool MB991958, check actuator test item 13: fuel pressure solenoid.

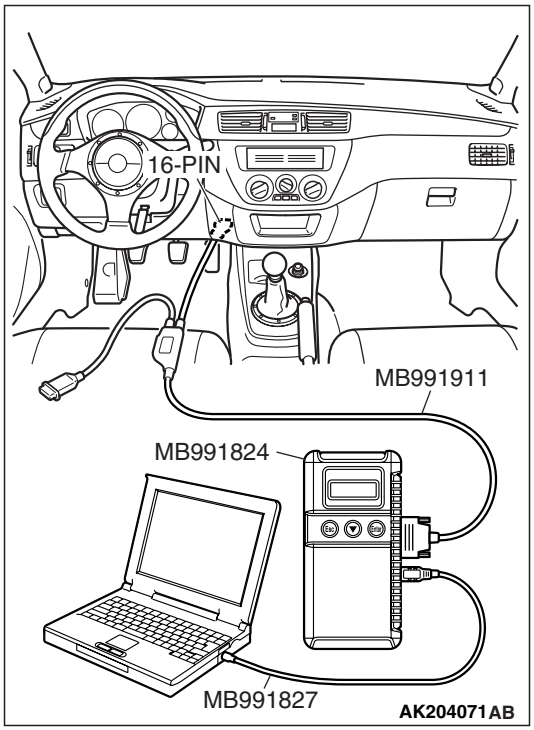

⚠ CAUTION

To prevent damage to scan tool MB991958, always turn the ignition switch to the "LOCK" (OFF) position before connecting or disconnecting scan tool MB991958.

(1) Connect scan tool MB991958 to the data link connector.
(2) Turn the ignition switch to the "ON" position.
(3) Set scan tool MB991958 to the actuator test mode for item 12, fuel pressure solenoid.
  - An operation sound should be heard and vibration should be felt when the fuel pressure solenoid is operated.

(4) Turn the ignition switch to the "LOCK" (OFF) position.

Q: Is the solenoid operating properly?

YES : It can be assumed that this malfunction is intermittent. Refer to GROUP 00, How to Use Troubleshooting/Inspection Service Points –How to Cope with Intermittent Malfunctions P.00-13.

NO : Go to Step 2.

STEP 2. Check harness connector B-28 at the fuel pressure solenoid for damage.

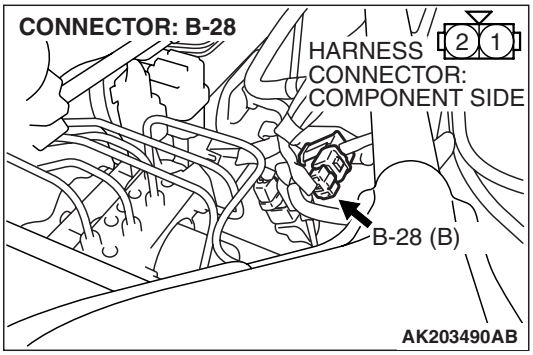

Q: Is the harness connector in good condition?

YES : Go to Step 3.

NO : Repair or replace it. Refer to GROUP 00E, Harness Connector Inspection P.00E-2. Then go to Step 12.

STEP 3 Check the fuel pressure solenoid.

(1) Disconnect the fuel pressure solenoid connector B-28.

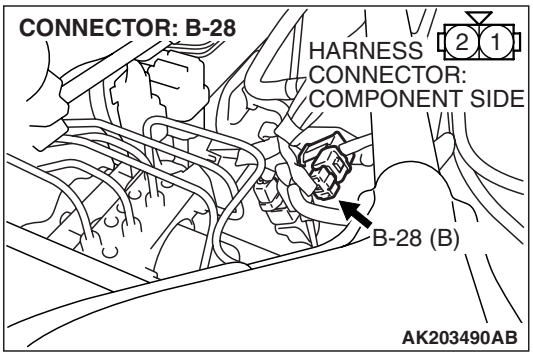

(2) Measure the resistance between fuel pressure solenoid side connector terminal No. 1 and No. 2.

Standard value: 29 – 35 ohms [at 20° C (68° F)]

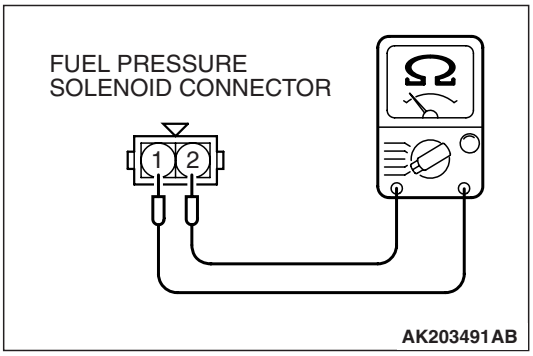

Q: Is the measured resistance between 29 and 35 ohms [at 20° C (68° F)]?

YES : Go to Step 4.

NO : Replace the fuel pressure solenoid. Then go to Step 12.

STEP 4. Measure the power supply voltage at fuel pressure solenoid harness side connector B-28.

(1) Disconnect connector B-28 and measure at the harness side.

(2) Turn the ignition switch to the "ON" position.

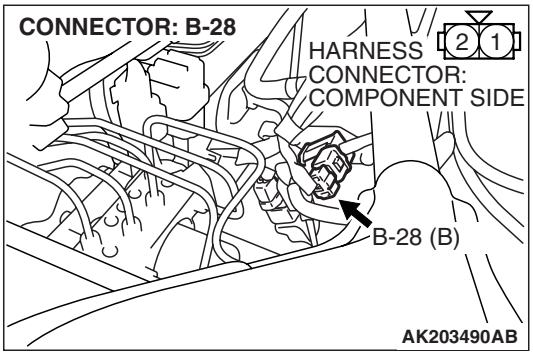

(3) Measure the voltage between terminal No. 1 and ground.
- Voltage should be battery positive voltage.

(4) Turn the ignition switch to the "LOCK" (OFF) position.

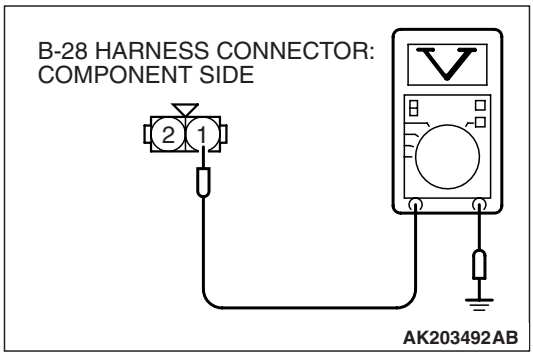

Q: Is battery positive voltage (approximately 12 volts) present?

YES : Go to Step 6.

NO : Go to Step 5.

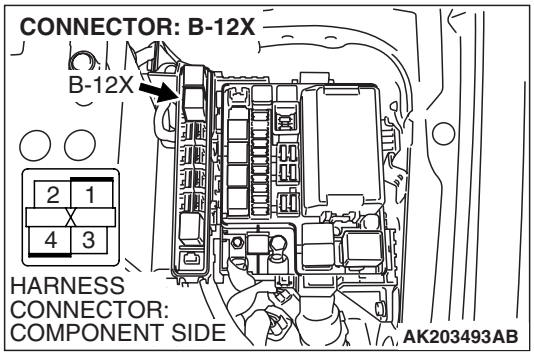

STEP 5. Check harness connector B-12X at MFI relay for damage.

Q: Is the harness connector in good condition?

YES : Repair harness wire between MFI relay connector B-12X (terminal No. 4) and fuel pressure solenoid connector B-28 (terminal No. 1) because of open circuit or short circuit to ground. Then go to Step 12.

NO : Repair or replace it. Refer to GROUP 00E, Harness Connector Inspection P.00E-2. Then go to Step 12.

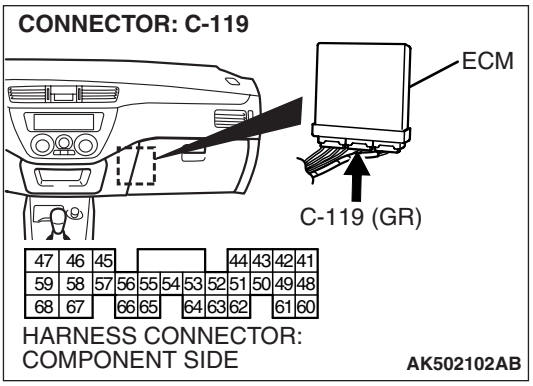

STEP 6. Measure the power supply voltage at ECM connector C-119 by backprobing.

(1) Do not disconnect connector C-119.

(2) Turn the ignition switch to the "ON" position.

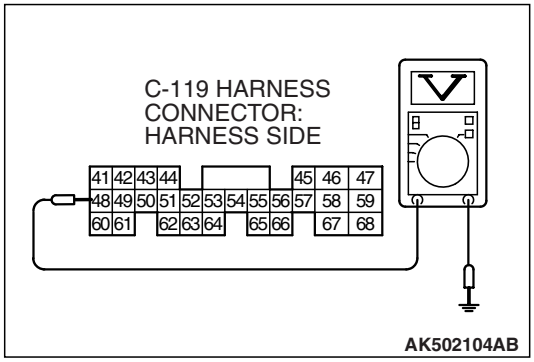

(3) Measure the voltage between terminal No. 48 and ground by backprobing.
- Voltage should be battery positive voltage.

(4) Turn the ignition switch to the "LOCK" (OFF) position.

Q: Is battery positive voltage (approximately 12 volts) present?

YES : Go to Step 9.

NO : Go to Step 7.

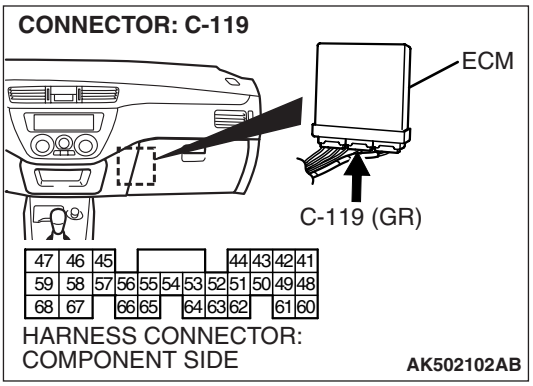

STEP 7. Check harness connector C-119 at ECM for damage.

Q: Is the harness connector in good condition?

YES : Go to Step 8.

NO : Repair or replace it. Refer to GROUP 00E, Harness Connector Inspection P.00E-2. Then go to Step 12.

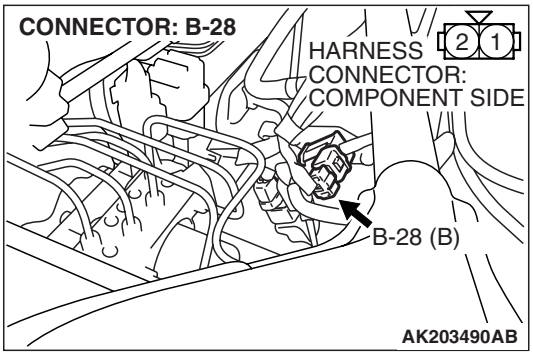

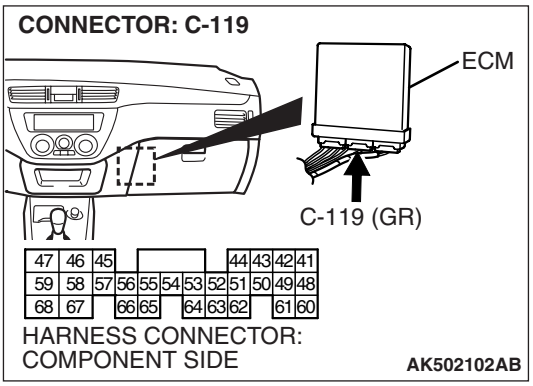

STEP 8. Check for open circuit and short circuit to ground between fuel pressure solenoid connector B-28 (terminal No. 2) and ECM connector C-119 (terminal No. 48).

Q: Is the harness wire in good condition?

YES : Replace the ECM. Then go to Step 12.

NO : Repair it. Then go to Step 12.

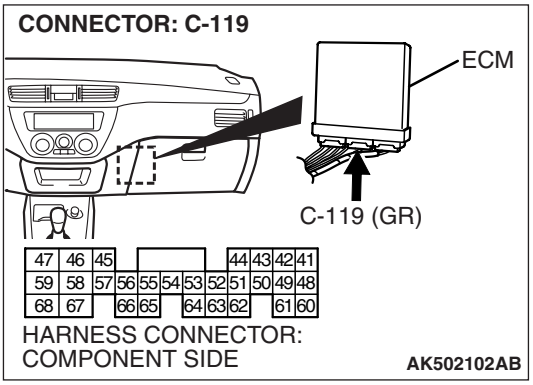

STEP 9. Check harness connector C-119 at ECM for damage.

Q: Is the harness connector in good condition?

YES : Go to Step 10.

NO : Repair or replace it. Refer to GROUP 00E, Harness Connector Inspection P.00E-2. Then go to Step 12.

STEP 10. Check for harness damage between MFI relay connector B-12X (terminal No. 4) and fuel pressure solenoid connector B-28 (terminal No. 1).

Q: Is the harness wire in good condition?

YES : Go to Step 11.

NO : Repair it. Then go to Step 12.

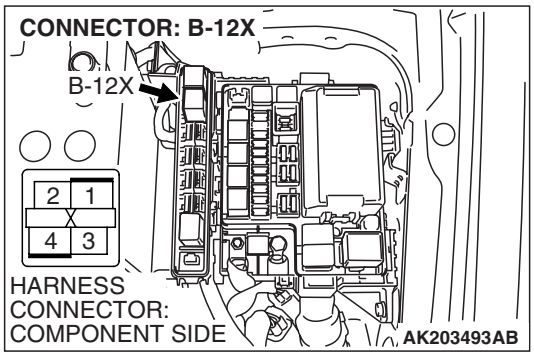

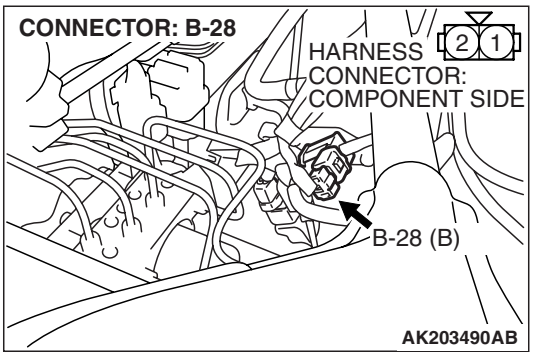

STEP 11. Check for harness damage between fuel pressure solenoid connector B-28 (terminal No. 2) and ECM connector C-119 (terminal No. 48).

Q: Is the harness wire in good condition?

YES : Replace the ECM. Then go to Step 12.

NO : Repair it. Then go to Step 12.

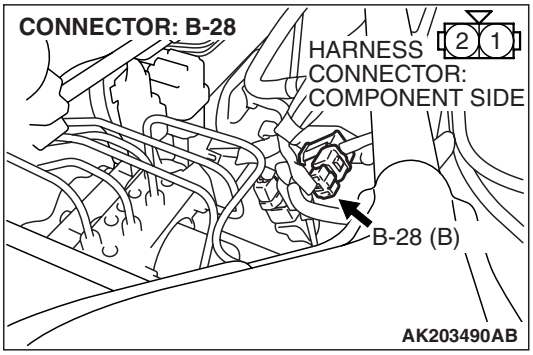

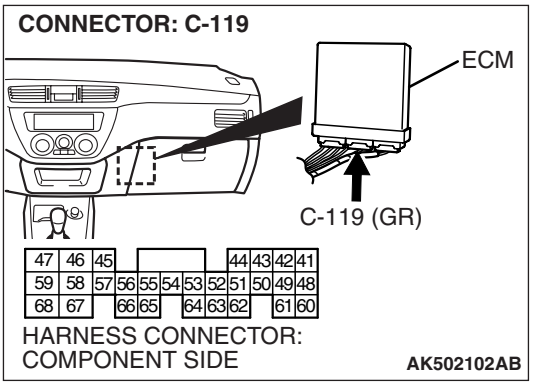

STEP 12. Test the OBD-II drive cycle.

(1) Carry out a test drive with the drive cycle pattern. Refer to GROUP 13A, Diagnostic Function –OBD-II Drive Cycle – Pattern 23 P.13A-12.

(2) Check the diagnostic trouble code (DTC).

Q: Is DTC P0090 set?

YES : Retry the troubleshooting.
NO : The inspection is complete.

DTC P0101: Volume Airflow Circuit Range/Performance Problem

Volume Airflow Sensor Circuit

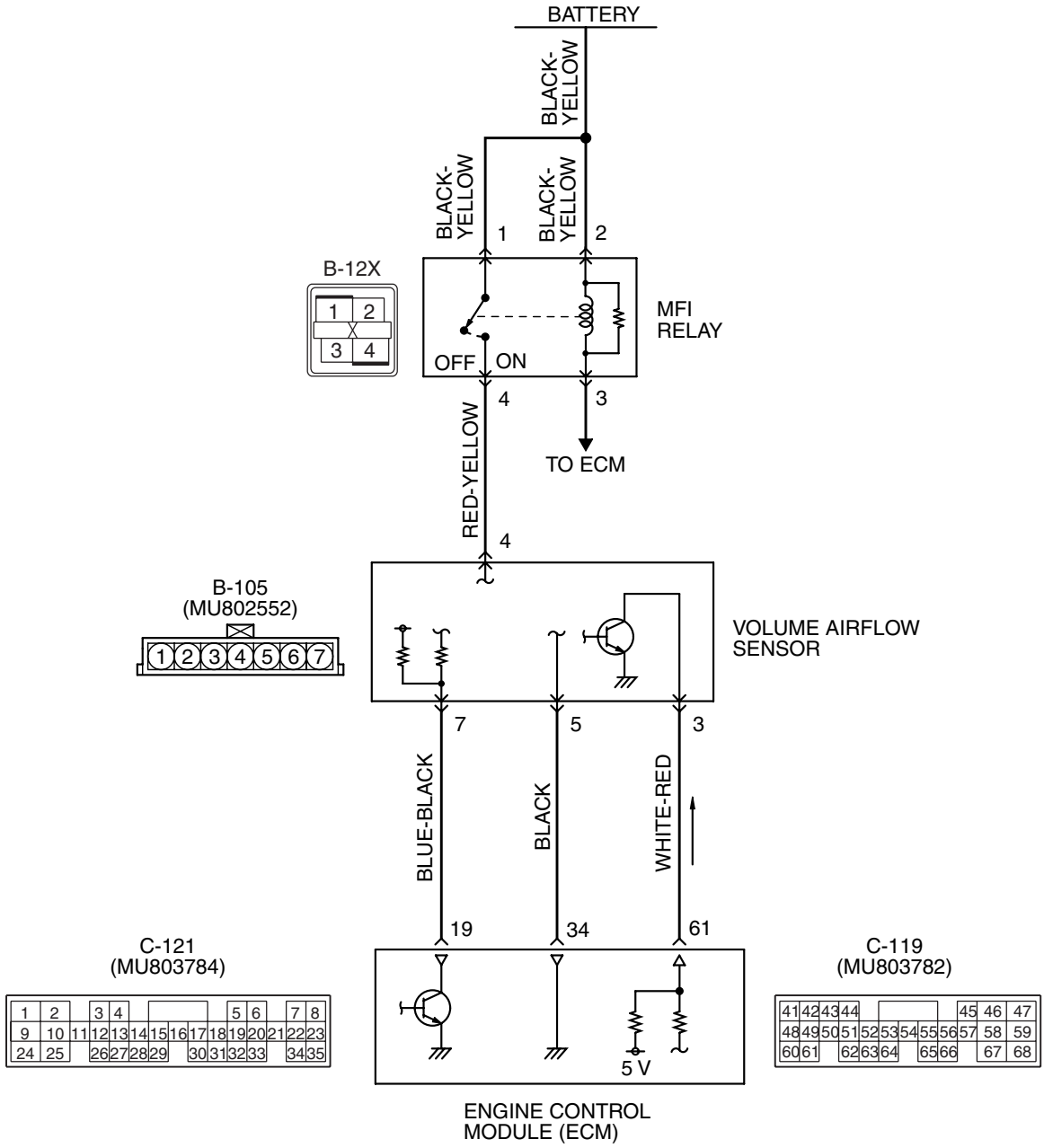

AK502061

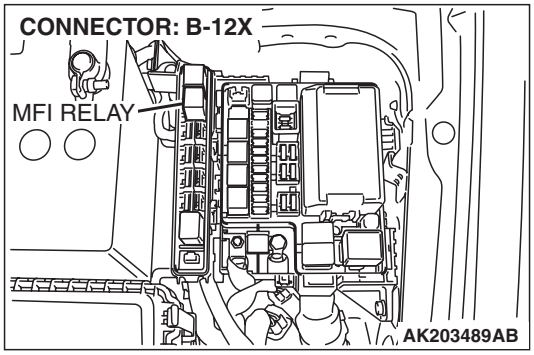

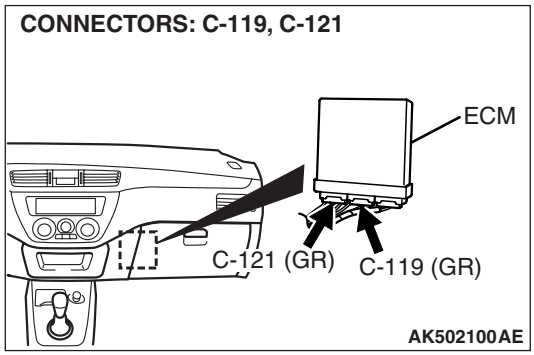

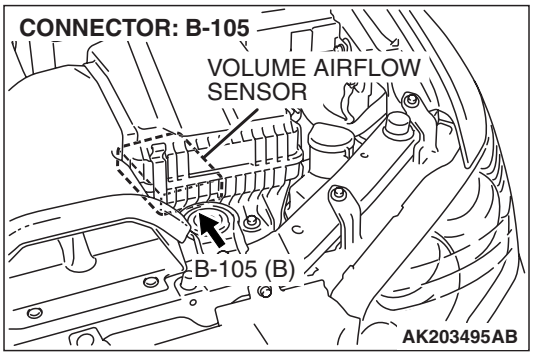

CIRCUIT OPERATION

- The volume airflow sensor power is supplied from the MFI relay (terminal No. 4), and the ground is provided on the ECM (terminal No. 34).
- 5-volt power is applied to the volume airflow sensor output terminal (terminal No. 3) from the ECM (terminal No. 61). The volume airflow sensor generates a pulse signal when the output terminal and ground are opened/closed (opened/short).
- The volume airflow reset signal is input by the ECM (terminal No. 19) to the volume airflow sensor (terminal No. 7).

TECHNICAL DESCRIPTION

- While the engine is running, the volume airflow sensor outputs a pulse signal which corresponds to the volume of airflow.
- The ECM checks whether the frequency of this signal output by the volume airflow sensor while the engine is running is at or above the set value.
- When the throttle position sensor output voltage is low, the ECM causes the power transistor to be "ON" to send an airflow sensor reset signal to the airflow sensor. In response to the reset signal, the airflow sensor resets the filter circuit and improves the ability of the airflow sensor to measure the amount of air in a small air intake region.

DESCRIPTIONS OF MONITOR METHODS

- Compare load value with volume airflow sensor output frequency.

MONITOR EXECUTION

- Continuous

MONITOR EXECUTION CONDITIONS (Other monitor and Sensor)

Other Monitor (There is no temporary DTC stored in memory for the item monitored below)

- Not applicable

Sensor (The sensor below is determined to be normal)

- Throttle position sensor

DTC SET CONDITIONS <Range/Performance problem-high input>

Logic Flow Chart

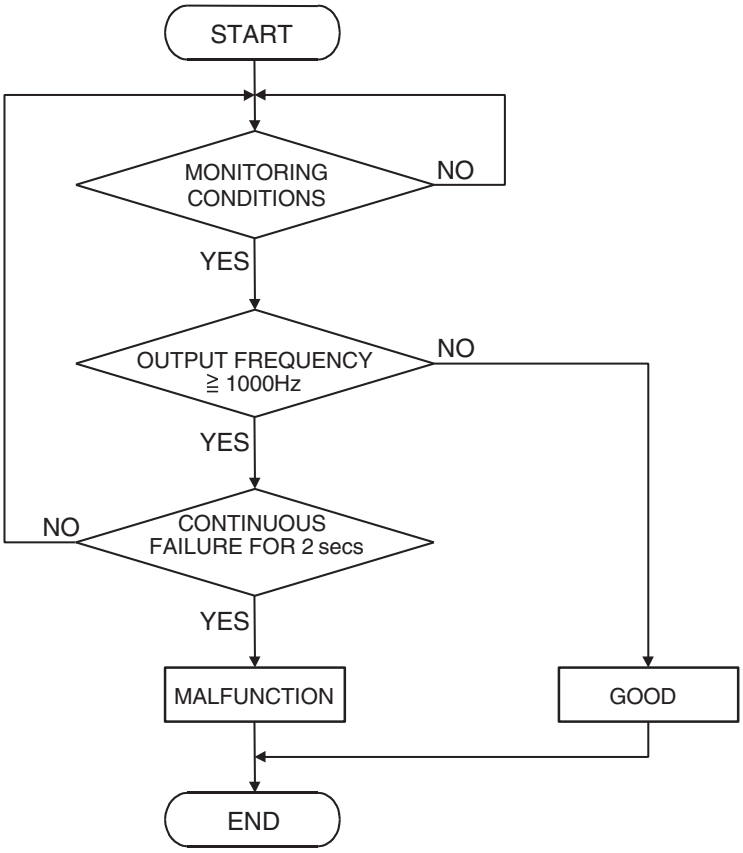

AK305534

Check Conditions

- Throttle position sensor output voltage is 2 volts or lower.
- Engine speed is lower than 2,000 r/min.

Judgement Criterion

- Volume airflow sensor output frequency has continued to be 1,000 Hz or higher for 2 seconds.

DTC SET CONDITIONS <Range/Performance problem-low input>

Logic Flow Chart

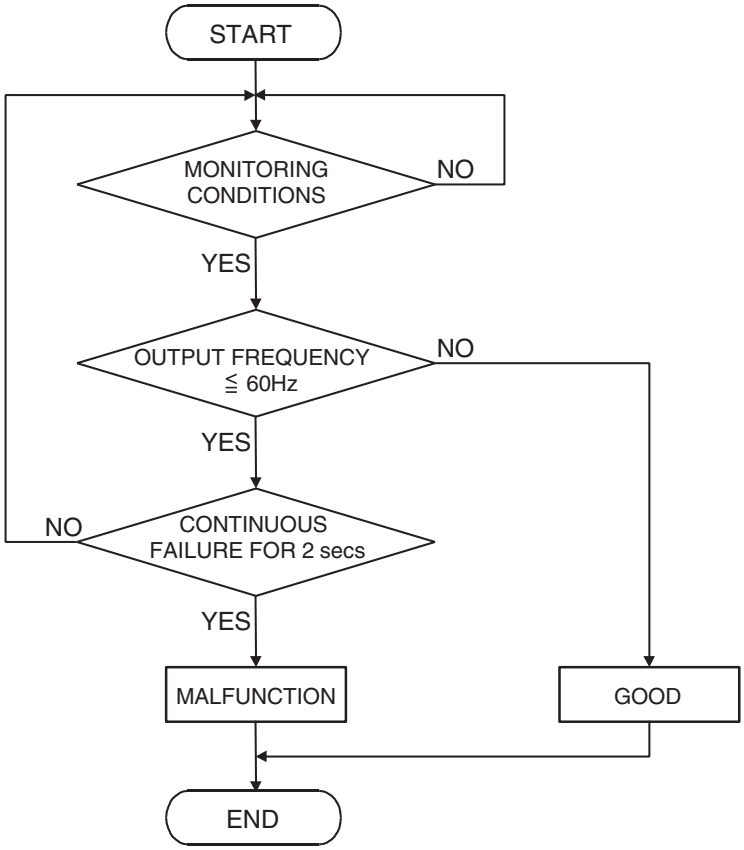

AK305535

Check Conditions

- Throttle position sensor output voltage is 1.5 volts or higher.
- Engine speed is higher than 2,000 r/min.

Judgement Criterion

- Volume airflow sensor output frequency has continued to be 60 Hz or lower for 2 seconds.

OBD-II DRIVE CYCLE PATTERN

Refer to Diagnostic Function –OBD-II Drive Cycle – Pattern 7 P.13A-12.

TROUBLESHOOTING HINTS (The most likely causes for this code to be set are:)

- Volume airflow sensor failed.
- Open or shorted volume airflow sensor circuit, harness damage, or connector damage.
- ECM failed.
- Air leak between volume airflow sensor and throttle body.

DIAGNOSIS

Required Special Tools:

- MB991958: Scan Tool (M.U.T.-III Sub Assembly)
  - MB991824: V.C.I.
  - MB991827: USB Cable
  - MB991911: Main Harness B

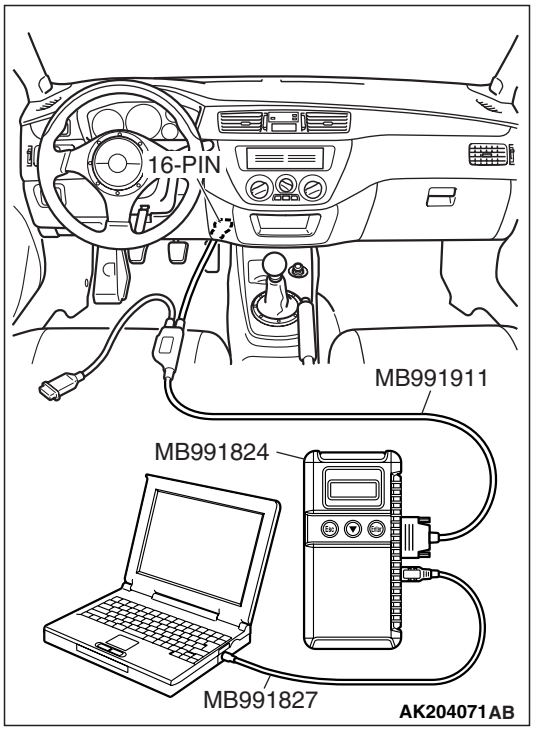

STEP 1. Using scan tool MB991958, check data list item 12: Volume Airflow Sensor.

⚠ CAUTION

To prevent damage to scan tool MB991958, always turn the ignition switch to the "LOCK" (OFF) position before connecting or disconnecting scan tool MB991958.

(1) Connect scan tool MB991958 to the data link connector.
(2) Start the engine and run at idle.
(3) Set scan tool MB991958 to the data reading mode for item 12, Volume Airflow Sensor.
(4) Warm up the engine to normal operating temperature: 80° C to 95° C (176° F to 203° F).
- The standard value during idling should be 10 Hz or more.
- When the engine is revved, the frequency should increase according to the increase in engine speed.

(5) Turn the ignition switch to the "LOCK" (OFF) position.

Q: Is the sensor operating properly?

YES : It can be assumed that this malfunction is intermittent. Refer to GROUP 00, How to Use Troubleshooting/Inspection Service Points –How to Cope with Intermittent Malfunctions P.00-13.

NO : Go to Step 2.

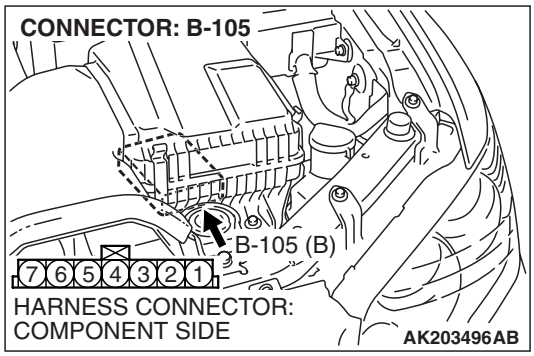

STEP 2. Measure the reset signal voltage at volume airflow sensor connector B-105 by backprobing.

(1) Do not disconnect connector B-105.
(2) Turn the ignition switch to the "ON" position.

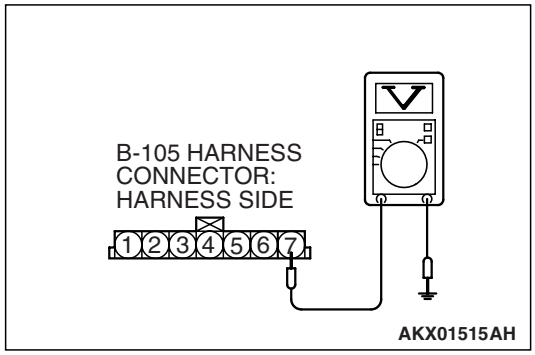

(3) Measure the voltage between terminal No. 7 and ground by backprobing.
- Voltage should be between 6.0 and 9.0 volts.

(4) Turn the ignition switch to the "LOCK" (OFF) position.

Q: Is the measured voltage between 6.0 and 9.0 volts?

YES : Go to Step 5.

NO : Go to Step 3.

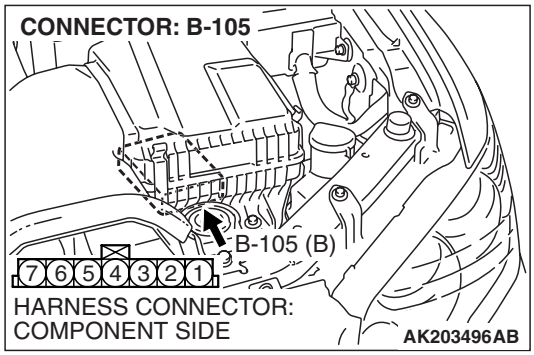

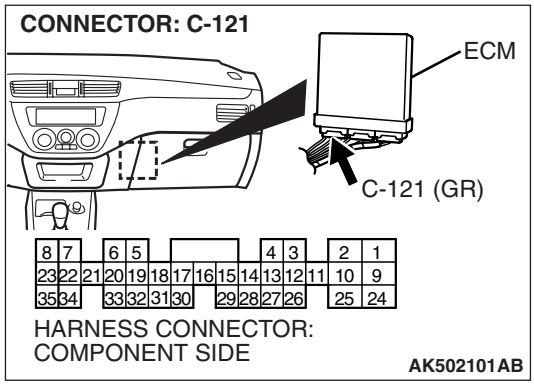

STEP 3. Check harness connector B-105 at volume airflow sensor and harness connector C-121 at ECM for damage.

Q: Is the harness connector in good condition?

YES : Go to Step 4.

NO : Repair or replace it. Refer to GROUP 00E, Harness Connector Inspection P.00E-2. Then go to Step 9.

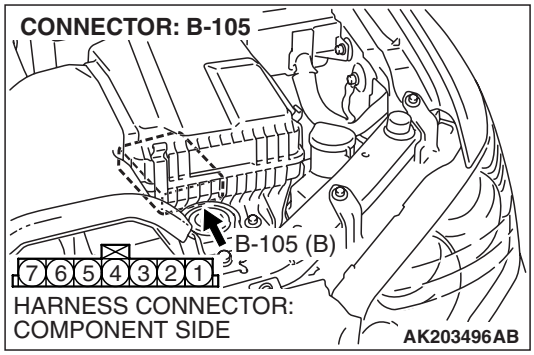

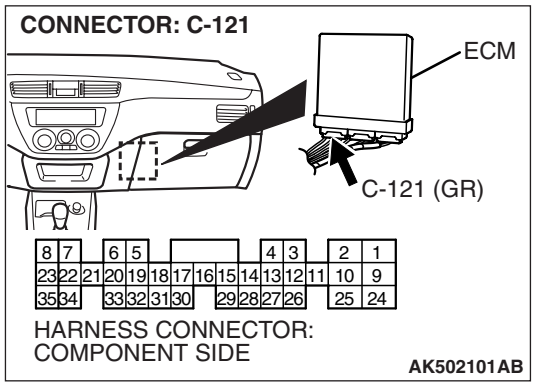

STEP 4. Check for short circuit to ground between volume airflow sensor connector B-105 (terminal No. 7) and ECM connector C-121 (terminal No. 19).

Q: Is the harness wire in good condition?

YES : Replace the volume airflow sensor. Then go to Step 9.

NO : Repair it. Then go to Step 9.

STEP 5. Measure the reset signal voltage at volume airflow sensor connector B-105 by backprobing.

(1) Do not disconnect connector B-105.
(2) Start the engine and run at idle.

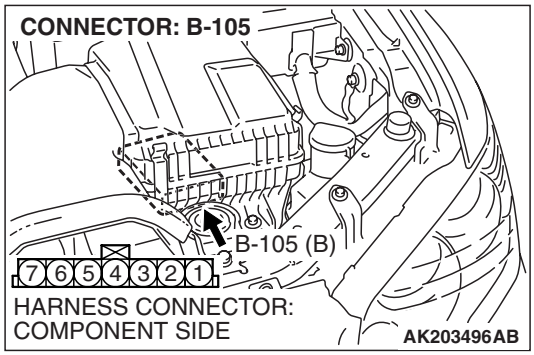

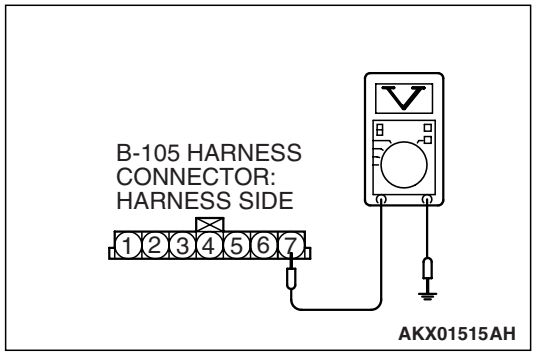

(3) Measure the voltage between terminal No. 7 and ground by backprobing.
- When the engine idling, voltage should be 1.0 volt or less.
- When the engine speed is 3,000 r/min, voltage should be between 6.0 and 9.0 volts.

(4) Turn the ignition switch to the "LOCK" (OFF) position.

Q: Is the measured voltage within the specified range?

YES : Go to Step 8.
NO : Go to Step 6.

STEP 6. Check harness connector B-105 at volume airflow sensor and harness connector C-121 at ECM for damage.

Q: Is the harness connector in good condition?

YES : Go to Step 7.
NO : Repair or replace it. Refer to GROUP 00E, Harness Connector Inspection P.00E-2. Then go to Step 9.

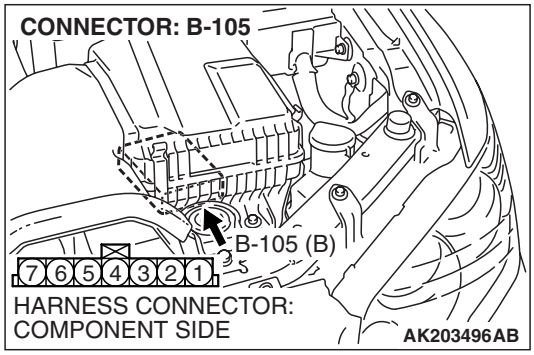

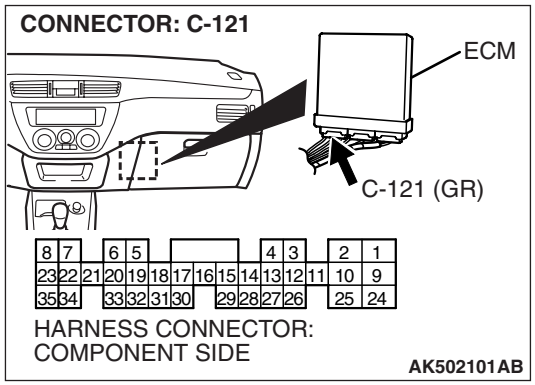

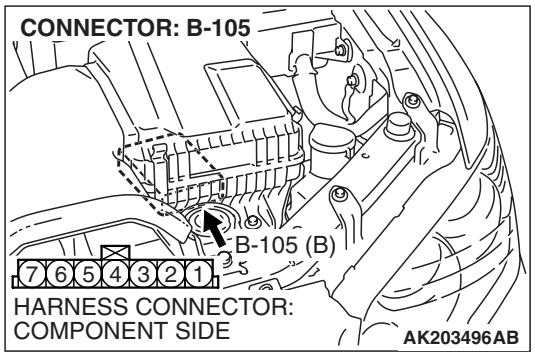

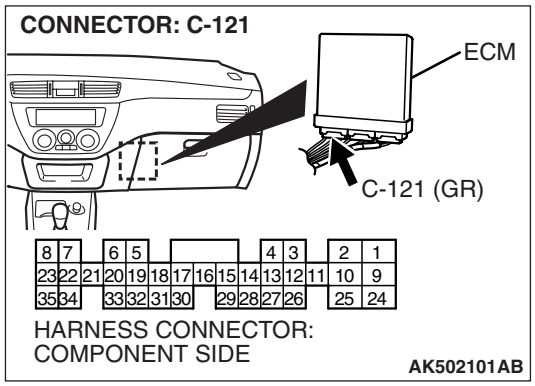

STEP 7. Check for open circuit and harness damage between volume airflow sensor connector B-105 (terminal No. 7) and ECM connector C-121 (terminal No. 19).

Q: Is the harness wire in good condition?

YES : Replace the ECM. Then go to Step 9.

NO : Repair it. Then go to Step 9.

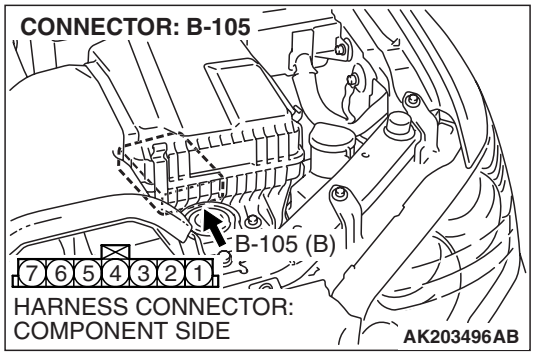

STEP 8. Replace the volume airflow sensor.

(1) Replace the volume airflow sensor.

(2) Carry out a test drive with the drive cycle pattern. Refer to GROUP 13A, Diagnostic Function –OBD-II Drive Cycle – Pattern 7 P.13A-12.

(3) Check the diagnostic trouble code (DTC).

Q: Is DTC P0101 set?

YES : Replace the ECM. Then go to Step 9.

NO : The inspection is complete.

STEP 9. Test the OBD-II drive cycle.

(1) Carry out a test drive with the drive cycle pattern. Refer to GROUP 13A, Diagnostic Function –OBD-II Drive Cycle – Pattern 7 P.13A-12.

(2) Check the diagnostic trouble code (DTC).

Q: Is DTC P0101 set?

YES : Retry the troubleshooting.

NO : The inspection is complete.

DTC P0102: Volume Airflow Circuit Low Input

Volume Airflow Sensor Circuit

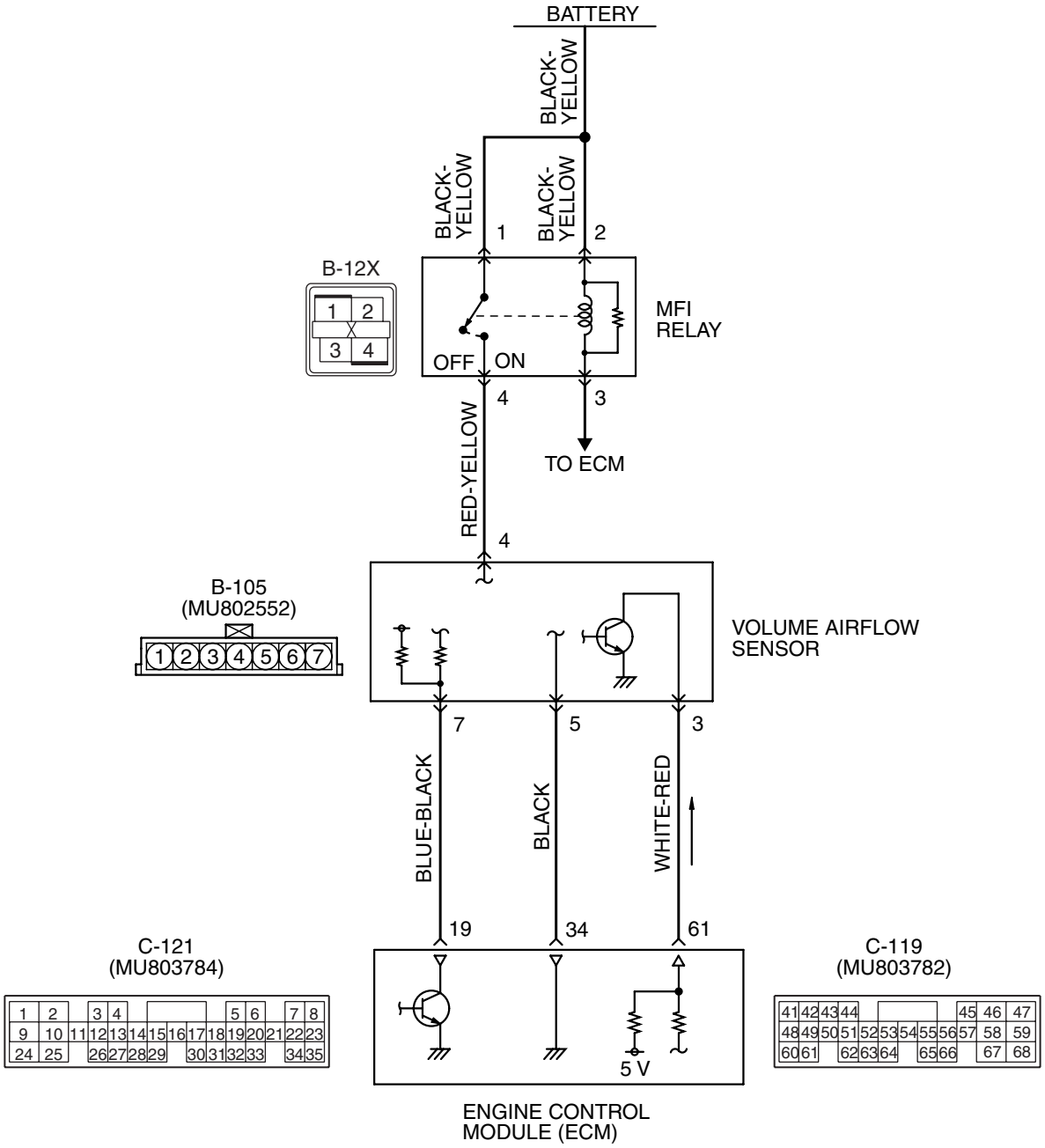

AK502061

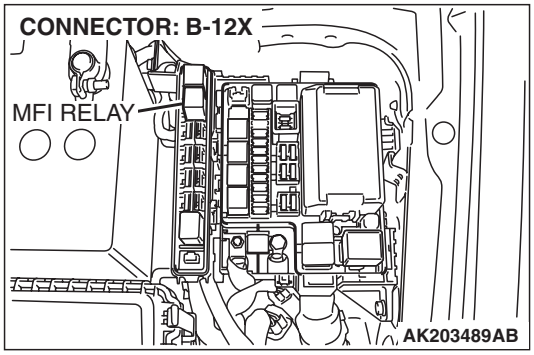

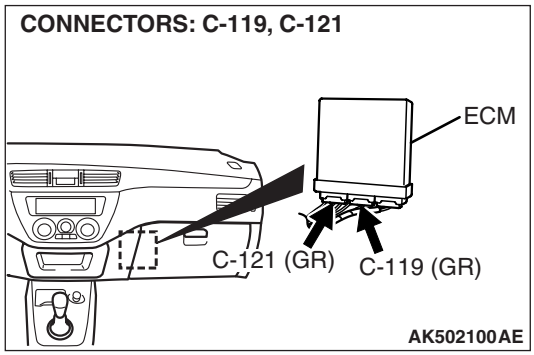

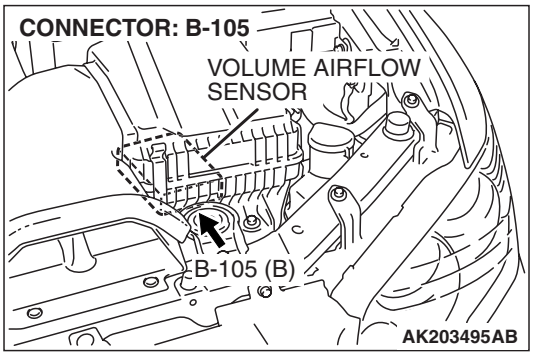

CIRCUIT OPERATION

- The volume airflow sensor power is supplied from the MFI relay (terminal No. 4), and the ground is provided on the ECM (terminal No. 34).
- 5-volt power is applied to the volume airflow sensor output terminal (terminal No. 3) from the ECM (terminal No. 61). The volume airflow sensor generates a pulse signal when the output terminal and ground are opened/closed (opened/short).

TECHNICAL DESCRIPTION

- While the engine is running, the volume airflow sensor outputs a pulse signal which corresponds to the volume of airflow.
- The ECM checks whether the frequency of this signal output by the volume airflow sensor while the engine is running is at or above the set value.

DESCRIPTIONS OF MONITOR METHODS

- Volume airflow sensor output frequency is out of specified range.

MONITOR EXECUTION

- Continuous

MONITOR EXECUTION CONDITIONS (Other monitor and Sensor)

Other Monitor (There is no temporary DTC stored in memory for the item monitored below)

- Not applicable

Sensor (The sensor below is determined to be normal)

- Not applicable

DTC SET CONDITIONS

Logic Flow Chart

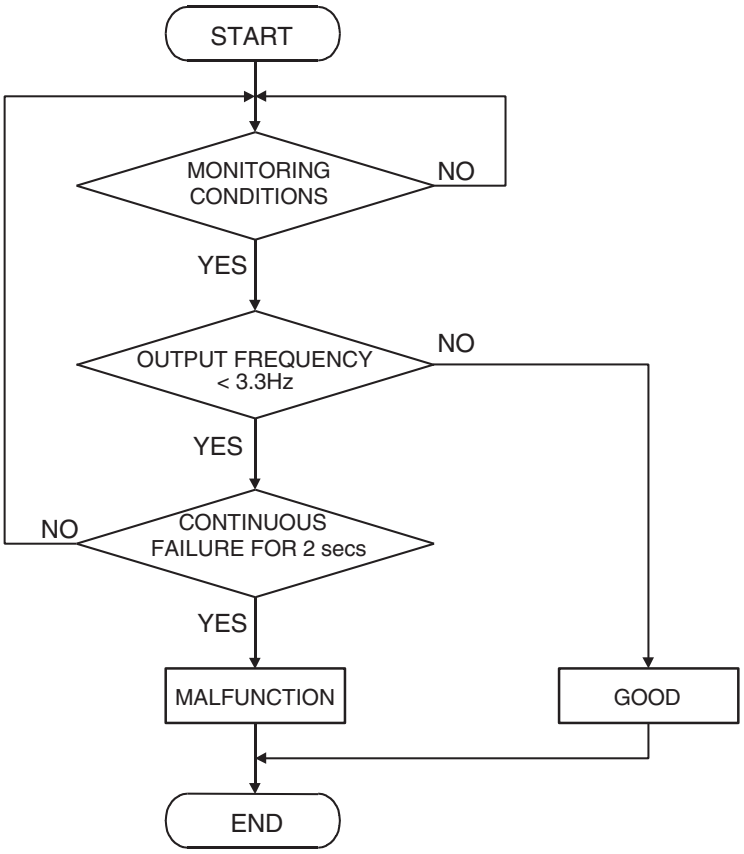

AK301413

Check Condition

- Engine speed is higher than 500 r/min.

Judgement Criterion

- Volume airflow sensor output frequency has continued to be 3.3 Hz or lower for 2 seconds.

OBD-II DRIVE CYCLE PATTERN

Refer to Diagnostic Function –OBD-II Drive Cycle – Pattern 23 P.13A-12.

TROUBLESHOOTING HINTS (The most likely causes for this code to be set are:)

- Volume airflow sensor failed.
- Open or shorted volume airflow sensor circuit, harness damage or connector damage.
- ECM failed.

DIAGNOSIS

Required Special Tools:

- MB991958: Scan Tool (M.U.T.-III Sub Assembly)
  - MB991824: V.C.I.
  - MB991827: USB Cable
  - MB991911: Main Harness B

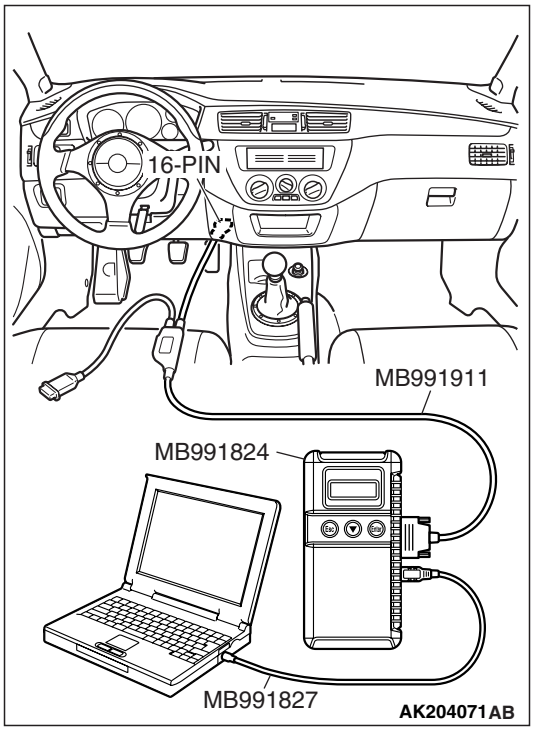

STEP 1. Using scan tool MB991958, check data list item 12: Volume Airflow Sensor.

⚠ CAUTION

To prevent damage to scan tool MB991958, always turn the ignition switch to the "LOCK" (OFF) position before connecting or disconnecting scan tool MB991958.

(1) Connect scan tool MB991958 to the data link connector.
(2) Start the engine and run at idle.
(3) Set scan tool MB991958 to the data reading mode for item 12, Volume Airflow Sensor.
(4) Warm up the engine to normal operating temperature: 80° C to 95° C (176° F to 203° F).
- The standard value during idling should be 10 Hz or more.
- When the engine is revved, the frequency should increase according to the increase in engine speed.

(5) Turn the ignition switch to the "LOCK" (OFF) position.

Q: Is the sensor operating properly?

YES : It can be assumed that this malfunction is intermittent. Refer to GROUP 00, How to Use Troubleshooting/Inspection Service Points –How to Cope with Intermittent Malfunctions P.00-13.

NO : Go to Step 2.

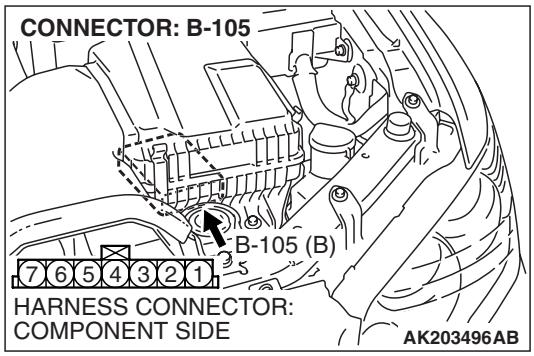

STEP 2. Measure the power supply voltage at volume airflow sensor connector B-105 by backprobing.

(1) Do not disconnect connector B-105.
(2) Turn the ignition switch to the "ON" position.

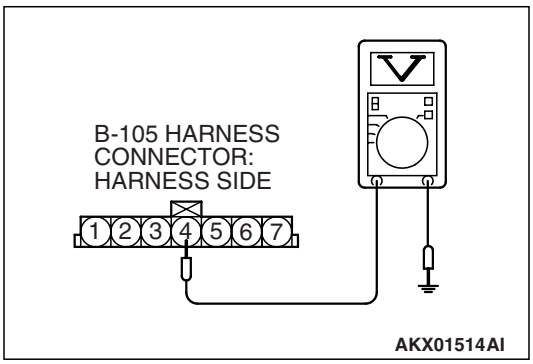

(3) Measure the voltage between terminal No. 4 and ground by backprobing.
- Voltage should be battery positive voltage.

(4) Turn the ignition switch to the "LOCK" (OFF) position.

Q: Is battery positive voltage (approximately 12 volts) present?

YES : Go to Step 5.

NO : Go to Step 3.

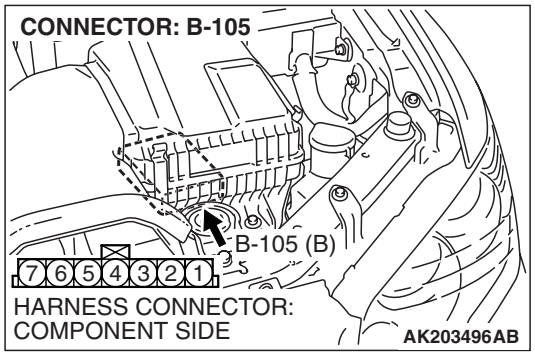

STEP 3. Measure the power supply voltage at volume airflow sensor harness side connector B-105.

(1) Disconnect connector B-105 and measure at the harness side.

(2) Turn the ignition switch to the "ON" position.

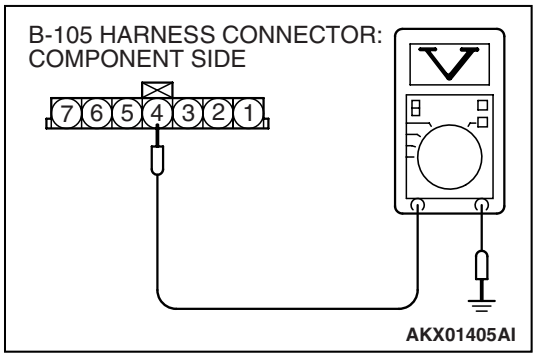

(3) Measure the voltage between terminal No. 4 and ground.
- Voltage should be battery positive voltage.

(4) Turn the ignition switch to the "LOCK" (OFF) position.

Q: Is battery positive voltage (approximately 12 volts) present?

YES : Go to Step 4.

NO : Repair harness wire between MFI relay connector B-12X (terminal No. 4) and volume airflow sensor connector B-105 (terminal No. 4) because of open circuit or short circuit to ground. Then go to Step 13.

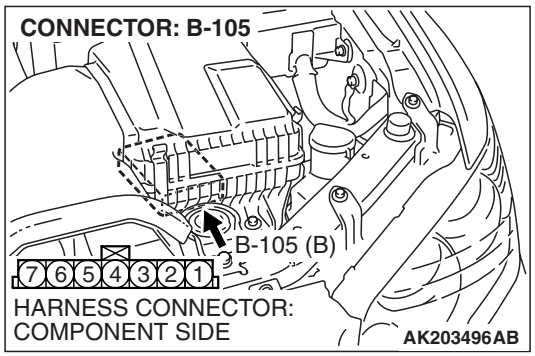

STEP 4. Check harness connector B-105 at the volume airflow sensor for damage.

Q: Is the harness connector in good condition?

YES : Repair harness wire between MFI relay connector B-12X (terminal No. 4) and volume airflow sensor connector B-105 (terminal No. 4) because of harness damage. Then go to Step 13.

NO : Repair or replace it. Refer to GROUP 00E, Harness Connector Inspection P.00E-2. Then go to Step 13.

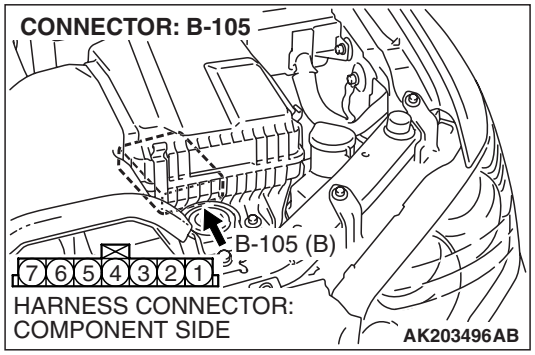

STEP 5. Check harness connector B-105 at volume airflow sensor for damage.

Q: Is the harness connector in good condition?

YES : Go to Step 6.

NO : Repair or replace it. Refer to GROUP 00E, Harness Connector Inspection P.00E-2. Then go to Step 13.

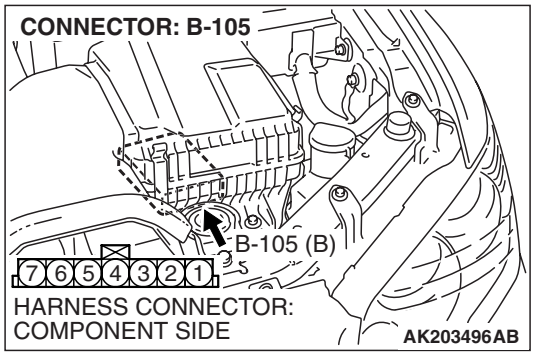

STEP 6. Measure the sensor supply voltage at volume airflow sensor harness side connector B-105.

(1) Disconnect connector B-105 and measure at the harness side.

(2) Turn the ignition switch to the "ON" position.

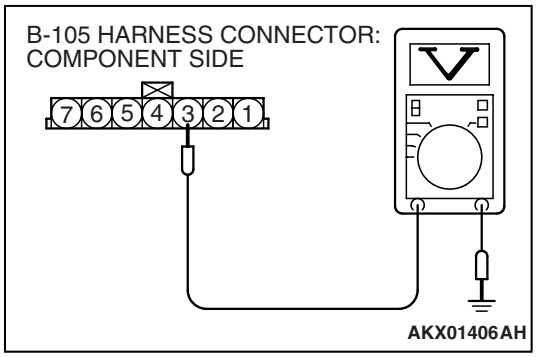

(3) Measure the voltage between terminal No. 3 and ground.
- Voltage should be between 4.8 and 5.2 volts.

(4) Turn the ignition switch to the "LOCK" (OFF) position.

Q: Is the measured voltage between 4.8 and 5.2 volts?

YES : Go to Step 9.
NO : Go to Step 7.

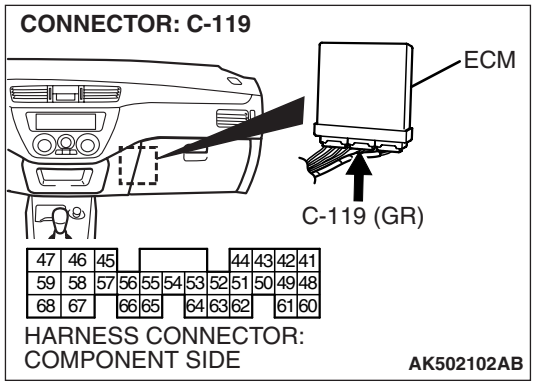

STEP 7. Check harness connector C-119 at ECM for damage.

Q: Is the harness connector in good condition?

YES : Go to Step 8.
NO : Repair or replace it. Refer to GROUP 00E, Harness Connector Inspection P.00E-2. Then go to Step 13.

STEP 8. Check for short circuit to ground between volume airflow sensor connector B-105 (terminal No. 3) and ECM connector C-119 (terminal No. 61).

Q: Is the harness wire in good condition?

YES : Replace the ECM. Then go to Step 13.

NO : Repair it. Then go to Step 13.

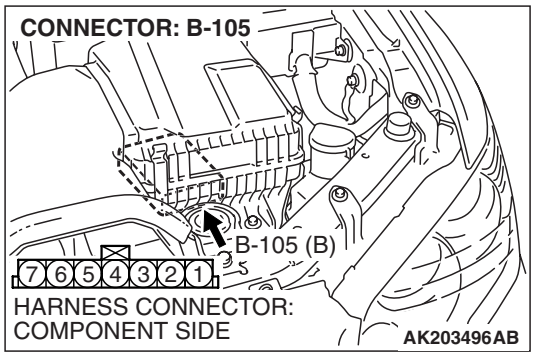

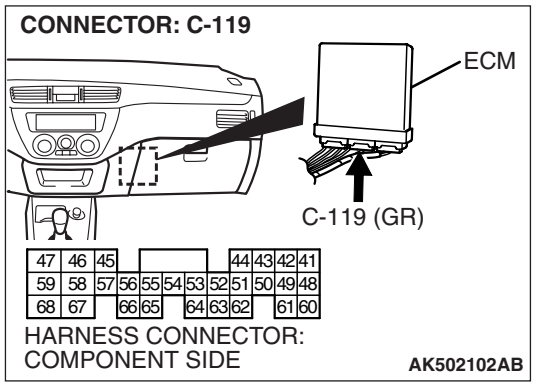

STEP 9. Check for continuity at volume airflow sensor harness side connector B-105.

(1) Disconnect connector B-105 and measure at the harness side.

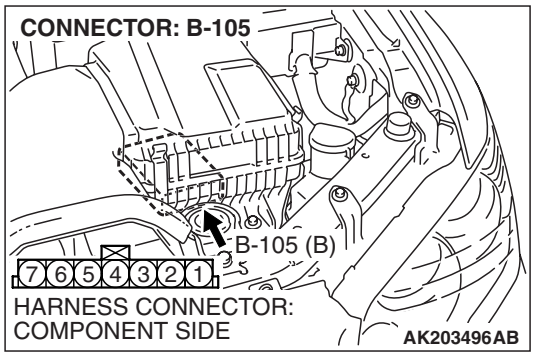

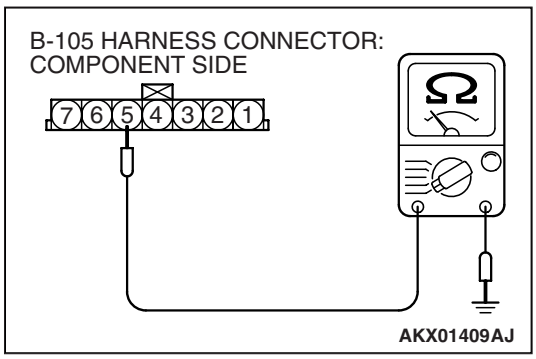

(2) Check for the continuity between terminal No. 5 and ground.
- Should be less than 2 ohms.

Q: Does continuity exist?

YES : Go to Step 12.

NO : Go to Step 10.

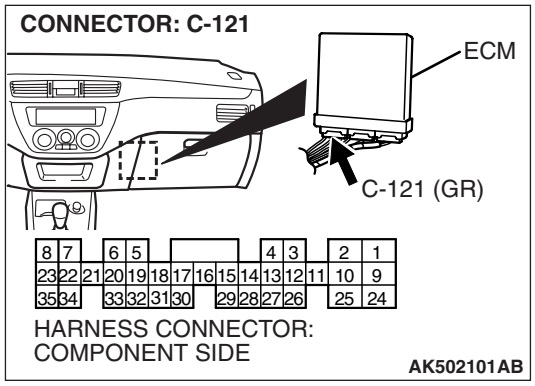

STEP 10. Check harness connector C-121 at ECM for damage.

Q: Is the harness connector in good condition?

YES : Go to Step 11.

NO : Repair or replace it. Refer to GROUP 00E, Harness Connector Inspection P.00E-2. Then go to Step 13.

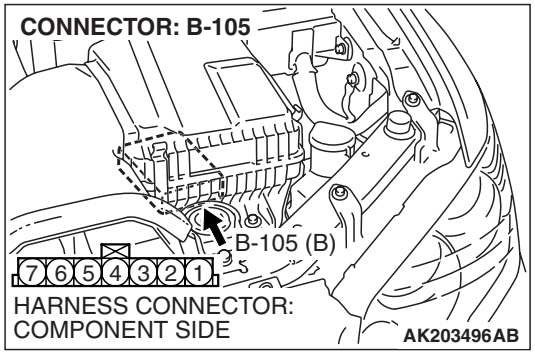

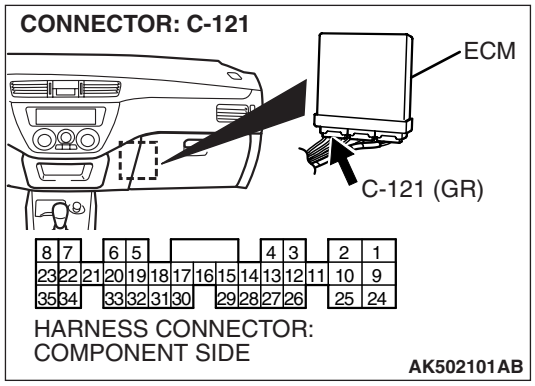

STEP 11. Check for open circuit and harness damage between volume airflow sensor connector B-105 (terminal No. 5) and ECM connector C-121 (terminal No. 34).

Q: Is the harness wire in good condition?

YES : Replace the ECM. Then go to Step 13.

NO : Repair it. Then go to Step 13.

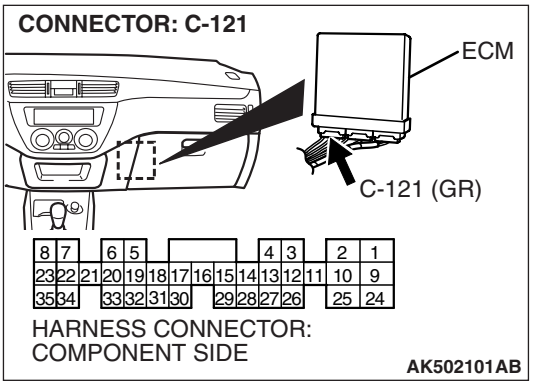

STEP 12. Check harness connector C-121 at ECM for damage.

Q: Is the harness connector in good condition?

YES : Replace the volume airflow sensor. Then go to Step 13.

NO : Repair or replace it. Refer to GROUP 00E, Harness Connector Inspection P.00E-2. Then go to Step 13.

STEP 13. Test the OBD-II drive cycle.

(1) Carry out a test drive with the drive cycle pattern. Refer to GROUP 13A, Diagnostic Function –OBD-II Drive Cycle – Pattern 23 P.13A-12.

(2) Check the diagnostic trouble code (DTC).

Q: Is DTC P0102 set?

YES : Retry the troubleshooting.

NO : The inspection is complete.

DTC P0106: Manifold Absolute Pressure Circuit Range/Performance Problem

Manifold Absolute Pressure Sensor Circuit

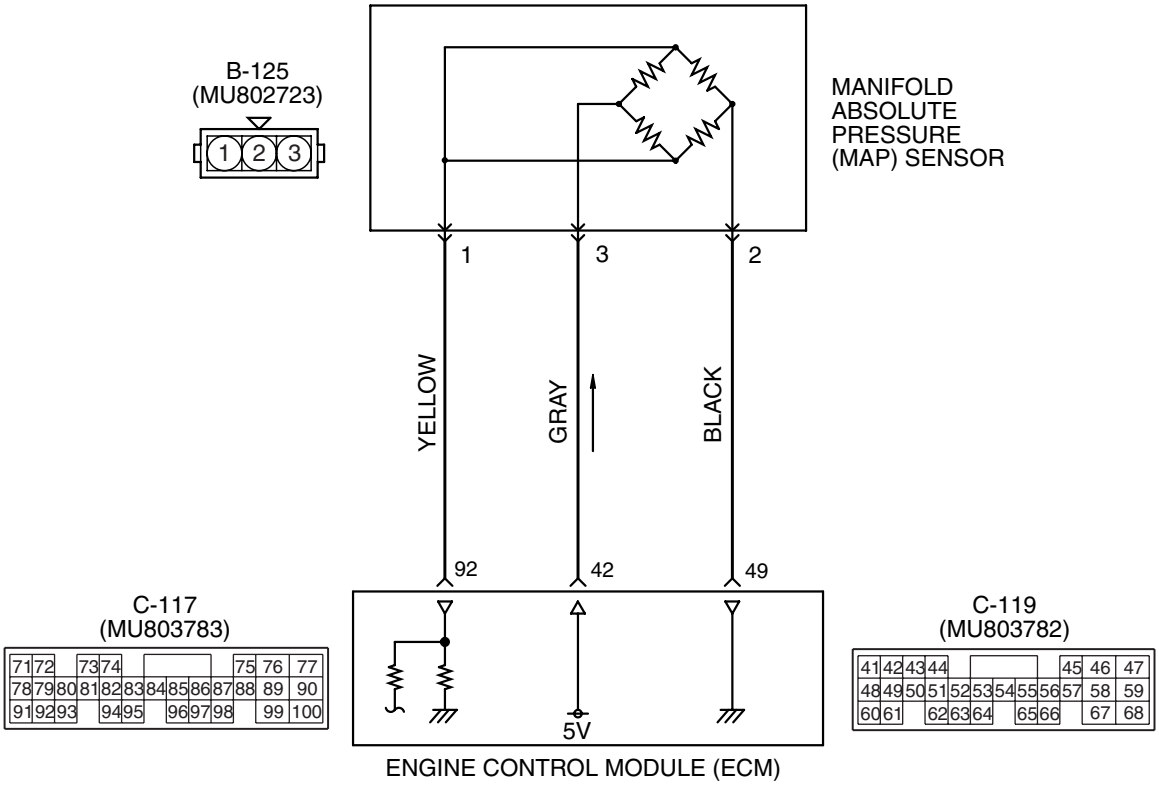

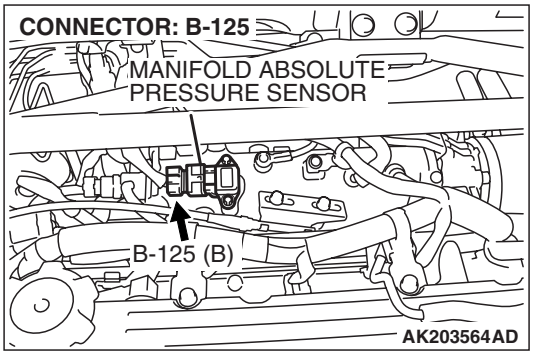

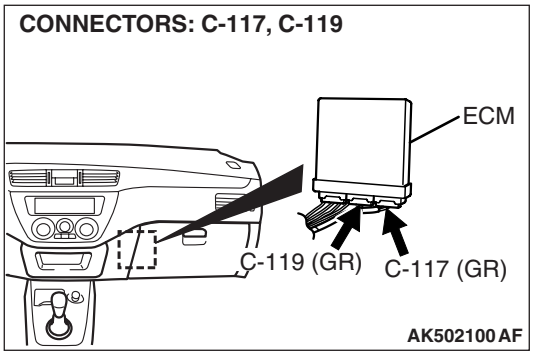

CIRCUIT OPERATION

- A 5-volt voltage is supplied to the manifold absolute pressure sensor power terminal (terminal No. 3) from the ECM (terminal No. 42). The ground terminal (terminal No. 2) is grounded with the ECM (terminal No. 49).
- A voltage that is proportional to the intake manifold pressure is sent to the ECM (terminal No. 92) from the manifold absolute pressure sensor output terminal (terminal No. 1).

TECHNICAL DESCRIPTION

- The manifold absolute pressure sensor outputs a voltage which corresponds to the intake manifold pressure.
- The ECM checks whether this voltage is within a specified range.

DESCRIPTIONS OF MONITOR METHODS

Compare load value with manifold absolute pressure sensor output voltage.

MONITOR EXECUTION

Continuous

MONITOR EXECUTION CONDITIONS (Other monitor and Sensor)

Other Monitor (There is no temporary DTC stored in memory for the item monitored below)

- Not applicable

Sensor (The sensor below is determined to be normal)

- Engine coolant temperature sensor
- Throttle position sensor
- Volume airflow sensor
- Intake air temperature sensor
- Barometric pressure sensor

DTC SET CONDITIONS <Range/Performance problem-high input>

Logic Flow Chart

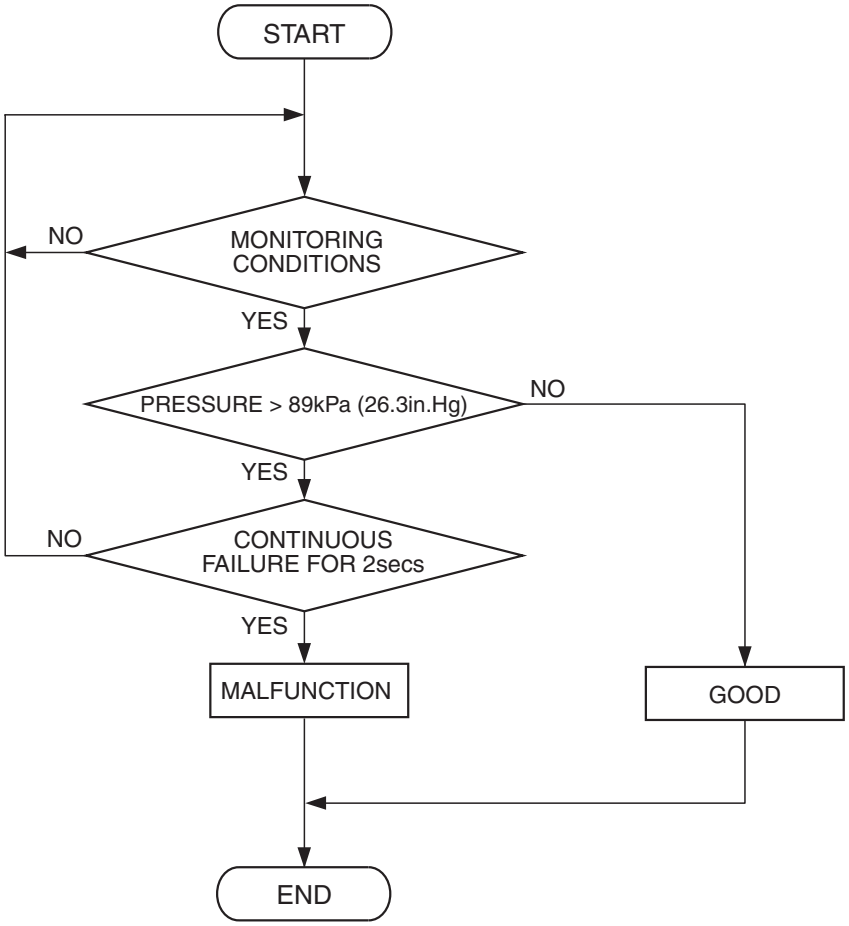

AK401473

Check Conditions

- 8 minutes or more have passed since the engine starting sequence was completed, when the engine coolant temperature at engine start is 0° C (32° F) or lower.
- Engine speed is lower than 1,500 r/min.
- Throttle position sensor output voltage is lower than 0.9 volt.

Judgement Criterion

- Manifold absolute pressure is 89 kPa (26.3 in.Hg) or higher for 2 seconds.

DTC SET CONDITIONS <Range/Performance problem-low input>

Logic Flow Chart

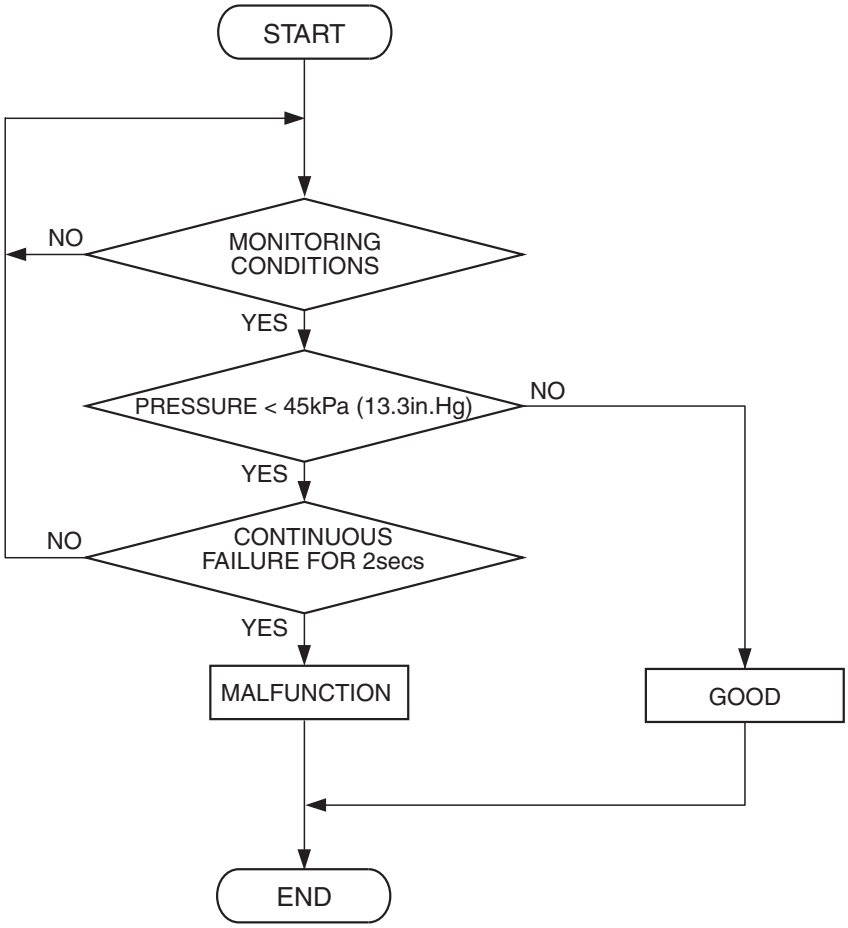

AK401474

Check Conditions

- 8 minutes or more have passed since the engine starting sequence was completed, when the engine coolant temperature at engine start is 0° C (32° F) or lower.
- Engine speed is higher than 1,500 r/min.
- Throttle position sensor output voltage is higher than 3.5 volts.

Judgement Criterion

- Manifold absolute pressure is 45 kPa (13.3 in.Hg) or lower for 2 seconds.

OBD-II DRIVE CYCLE PATTERN

Refer to Diagnostic Function –OBD-II Drive Cycle – Pattern 7 P.13A-12.

TROUBLESHOOTING HINTS (The most likely causes for this code to be set are:)

- Manifold absolute pressure sensor failed.
- Harness damage or connector damage.
- ECM failed.

DIAGNOSIS

Required Special Tools:

- MB991958: Scan Tool (M.U.T.-III Sub Assembly)
  - MB991824: V.C.I.
  - MB991827: USB Cable
  - MB991911: Main Harness B

STEP 1. Using scan tool MB991958, check data list item 95: Manifold Absolute Pressure Sensor.

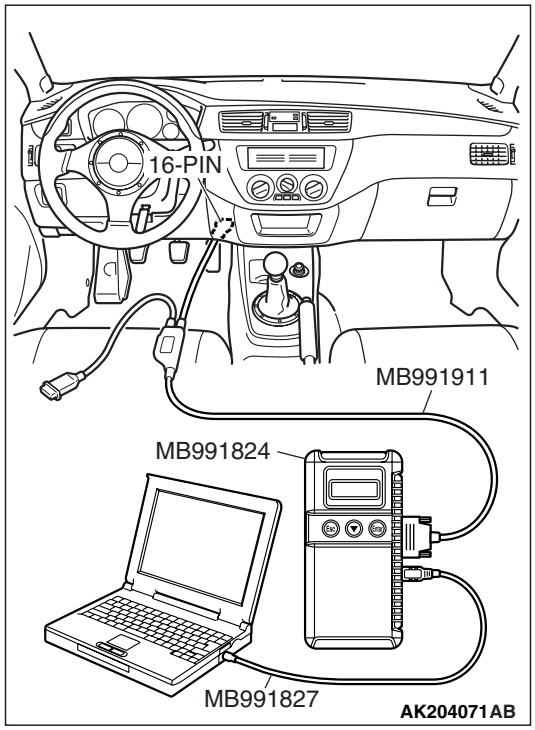

⚠ CAUTION

To prevent damage to scan tool MB991958, always turn the ignition switch to the "LOCK" (OFF) position before connecting or disconnecting scan tool MB991958.

(1) Connect scan tool MB991958 to the data link connector.
(2) Turn the ignition switch to the "ON" position.
(3) Set scan tool MB991958 to the data reading mode for item 95, Manifold Absolute Pressure Sensor.
  - When altitude is 0 m (0 foot), 101 kPa (29.8 in.Hg).
  - When altitude is 600 m (1,969 feet), 95 kPa (28.1 in.Hg).
  - When altitude is 1,200 m (3,937 feet), 88 kPa (26.0 in.Hg).
  - When altitude is 1,800 m (5,906 feet), 81 kPa (23.9 in.Hg).
(4) Start the engine.
  - When the engine is idling, 31 – 45 kPa (9.1 – 13.2 in.Hg).
  - When the engine is suddenly revved, manifold absolute pressure increases.
(5) Turn the ignition switch to the "LOCK" (OFF) position.

Q: Is the sensor operating properly?

YES : It can be assumed that this malfunction is intermittent. Refer to GROUP 00, How to Use Troubleshooting/Inspection Service Points –How to Cope with Intermittent Malfunctions P.00-13.

NO : Go to Step 2.

STEP 2. Measure the sensor supply voltage at manifold absolute pressure sensor connector B-125 by backprobing.

(1) Do not disconnect the connector B-125.
(2) Turn the ignition switch to the "ON" position.

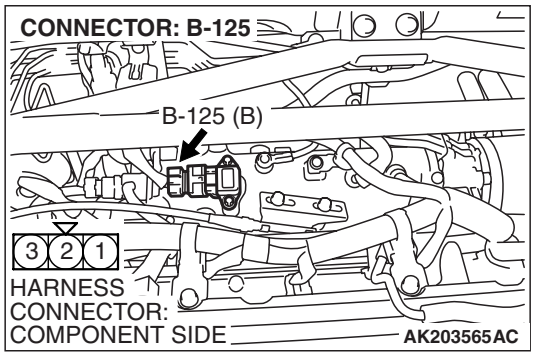

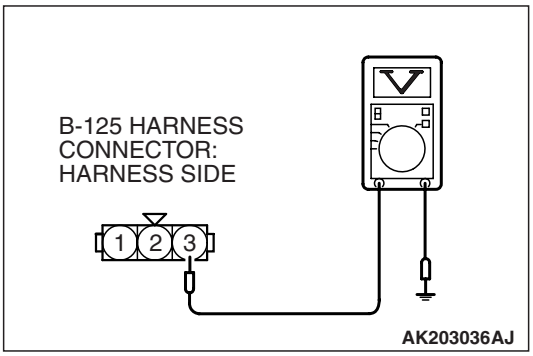

(3) Measure the voltage between terminal No. 3 and ground by back probing.
- Voltage should be between 4.8 and 5.2 volts.

(4) Turn the ignition switch to the "LOCK" (OFF) position.

Q: Is the measured voltage between 4.8 and 5.2 volts?

YES : Go to Step 6.
NO : Go to Step 3.

STEP 3. Measure the sensor supply voltage at ECM connector C-119 by backprobing.

(1) Do not disconnect the connector C-119.
(2) Turn the ignition switch to the "ON" position.

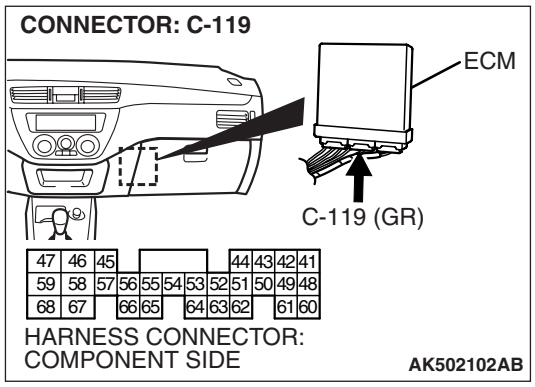

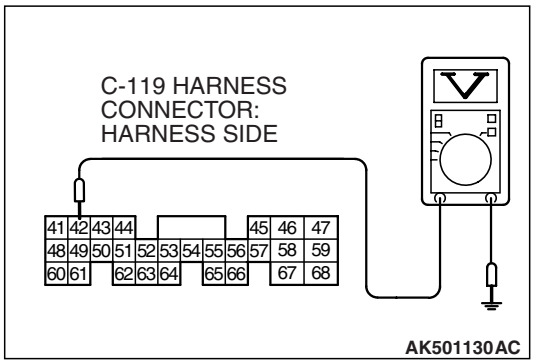

(3) Measure the voltage between terminal No. 42 and ground by backprobing.
- Voltage should be between 4.8 and 5.2 volts.

(4) Turn the ignition switch to the "LOCK" (OFF) position.

Q: Is the measured voltage between 4.8 and 5.2 volts?

YES : Go to Step 4.
NO : Go to Step 5.

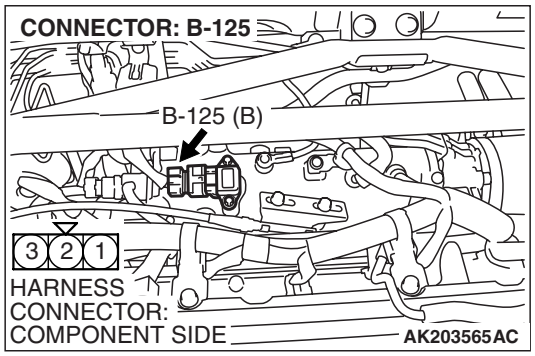

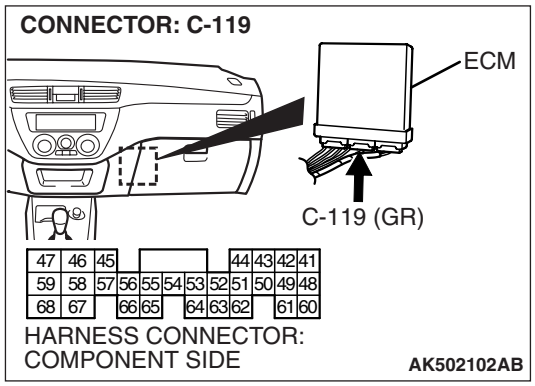

STEP 4. Check harness connector B-125 at the manifold absolute pressure sensor and connector C-119 at ECM for damage.

Q: Is the connector in good condition?

YES : Repair harness wire between manifold absolute pressure sensor connector B-125 (terminal No. 3) and ECM connector C-119 (terminal No. 42) because of harness damage. Then go to Step 12.

NO : Repair or replace it. Refer to GROUP 00E, Harness Connector Inspection P.00E-2. Then go to Step 12.

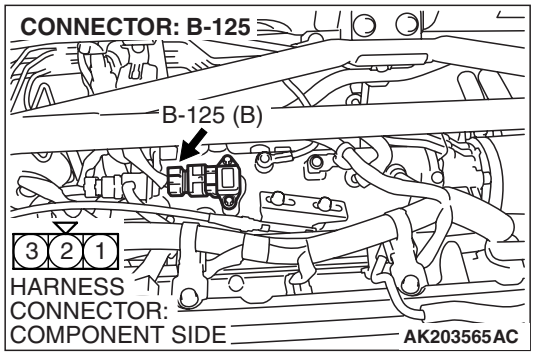

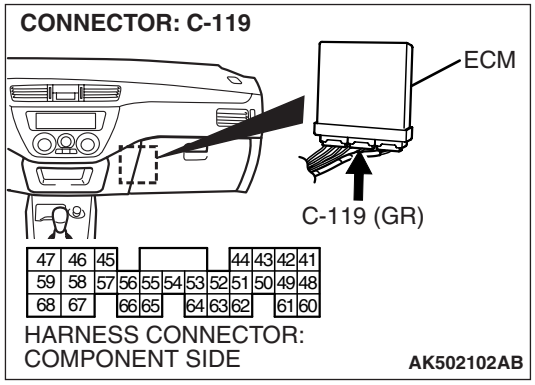

STEP 5. Check harness connector B-125 at the manifold absolute pressure sensor and connector C-119 at ECM for damage.

Q: Is the connector in good condition?

YES : Replace the ECM. Then go to Step 12.

NO : Repair or replace it. Refer to GROUP 00E, Harness Connector Inspection P.00E-2. Then go to Step 12.

STEP 6. Measure the ground voltage at manifold absolute pressure sensor connector B-125 by backprobing.

(1) Do not disconnect the connector B-125.
(2) Turn the ignition switch to the "ON" position.

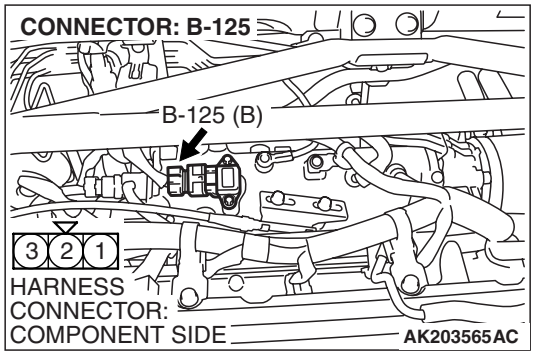

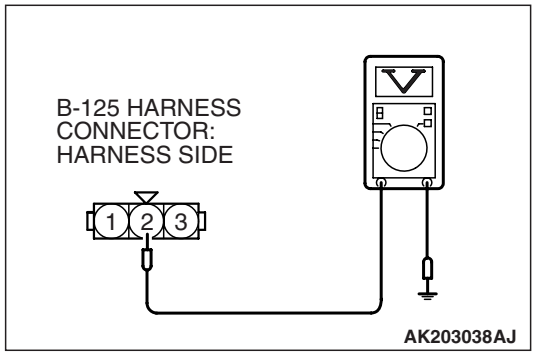

(3) Measure the voltage between terminal No. 2 and ground by backprobing.
- Voltage should be 0.5 volt or less.

(4) Turn the ignition switch to the "LOCK" (OFF) position.

Q: Is the measured voltage 0.5 volt or less?

YES : Go to Step 9.
NO : Go to Step 7.

STEP 7. Check harness connector B-125 at the manifold absolute pressure sensor and connector C-119 at ECM for damage.

Q: Is the harness connector in good condition?

YES : Go to Step 8.
NO : Repair or replace it. Refer to GROUP 00E, Harness Connector Inspection P.00E-2. Then go to Step 12.

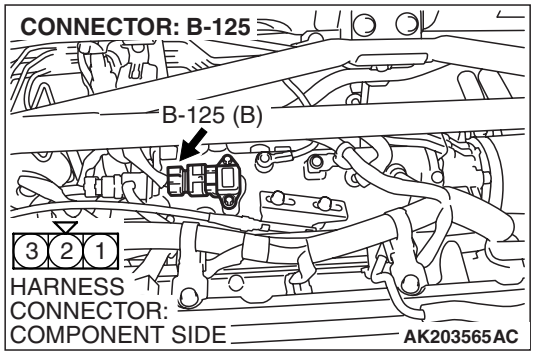

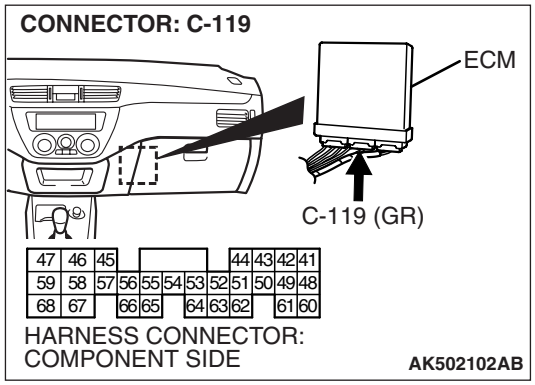

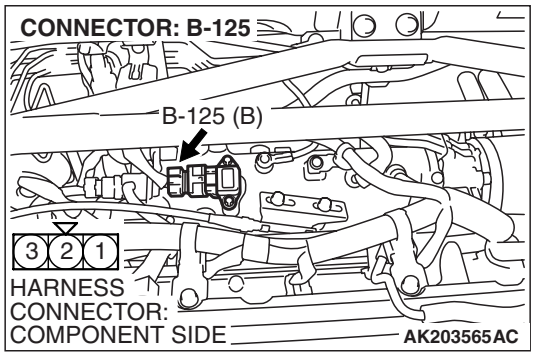

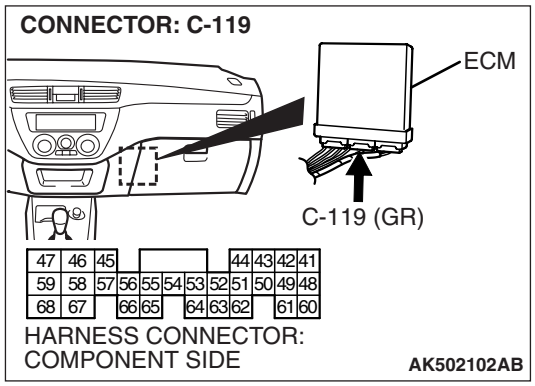

STEP 8. Check for harness damage between manifold absolute pressure sensor connector B-125 (terminal No. 2) and ECM connector C-119 (terminal No. 49).

Q: Is the harness wire in good condition?

YES : Replace the ECM. Then go to Step 12.

NO : Repair it. Then go to Step 12.

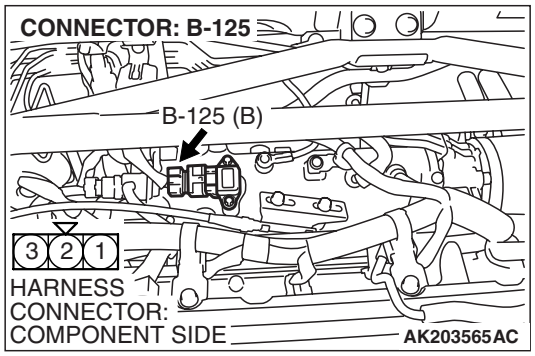

STEP 9. Check harness connector B-125 at manifold absolute pressure sensor for damage.

Q: Is the harness connector in good condition?

YES : Go to Step 10.

NO : Repair or replace it. Refer to GROUP 00E, Harness Connector Inspection P.00E-2. Then go to Step 12.

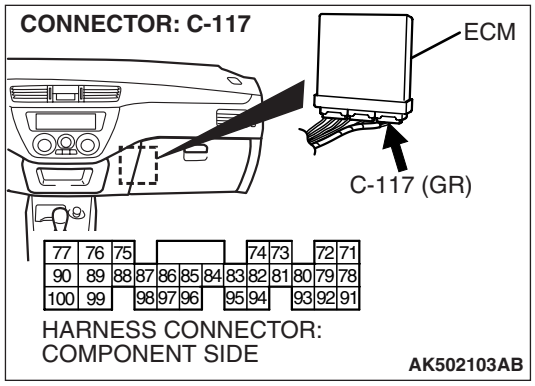

STEP 10. Check harness connector C-117 at ECM for damage.

Q: Is the harness connector in good condition?

YES : Go to Step 11.

NO : Repair or replace it. Refer to GROUP 00E, Harness Connector Inspection P.00E-2. Then go to Step 12.

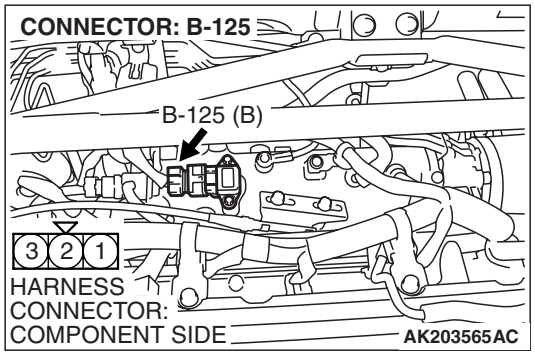

STEP 11. Check for harness damage between manifold absolute pressure sensor connector B-125 (terminal No. 1) and ECM connector C-117 (terminal No. 92).

Q: Is the harness wire in good condition?

YES : Replace the manifold absolute pressure sensor. Then go to Step 12.

NO : Repair it. Then go to Step 12.

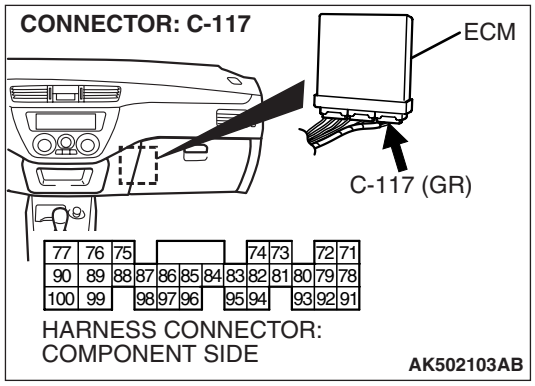

STEP 12. Test the OBD-II drive cycle.

(1) Carry out a test drive with the drive cycle pattern. Refer to Diagnostic Function –OBD-II Drive Cycle – Pattern 7 P.13A-12.

(2) Check the diagnostic trouble code (DTC).

Q: Is DTC P0106 set?

YES : Retry the troubleshooting.

NO : The inspection is complete.

DTC P0107: Manifold Absolute Pressure Circuit Low Input

Manifold Absolute Pressure Sensor Circuit

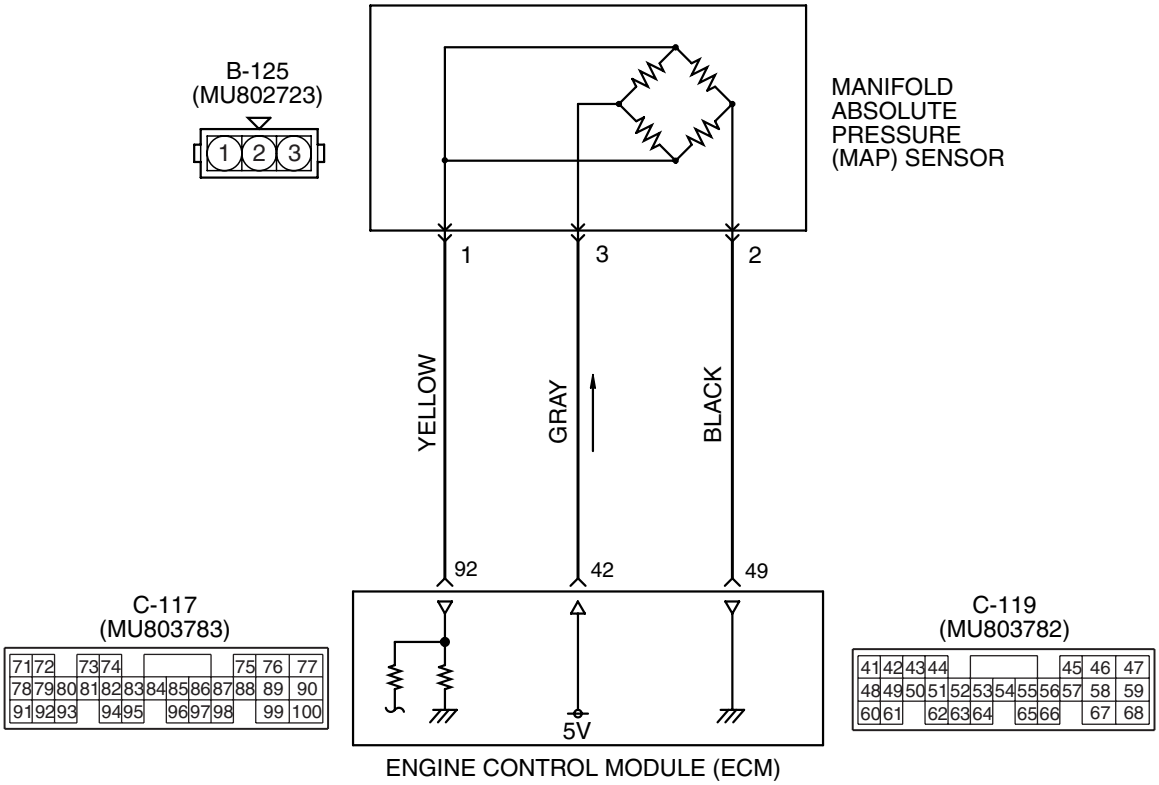

AK502062

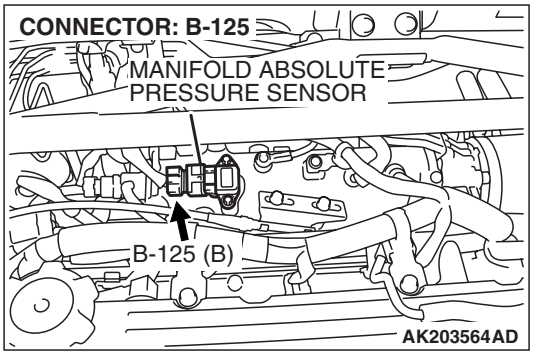

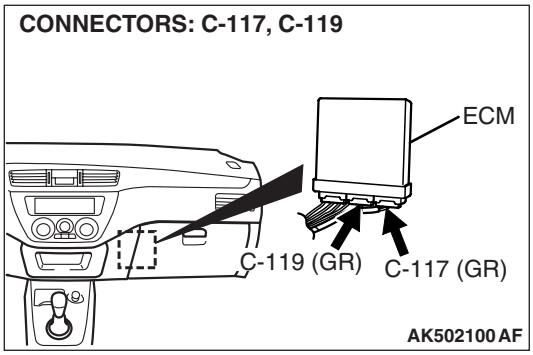

CIRCUIT OPERATION

- A 5-volt voltage is supplied to the manifold absolute pressure sensor power terminal (terminal No. 3) from the ECM (terminal No. 42). The ground terminal (terminal No. 2) is grounded with the ECM (terminal No. 49).
- A voltage that is proportional to the intake manifold pressure is sent to the ECM (terminal No. 92) from the manifold absolute pressure sensor output terminal (terminal No. 1).

TECHNICAL DESCRIPTION

- The manifold absolute pressure sensor outputs a voltage which corresponds to the intake manifold pressure.
- The ECM checks whether this voltage is within a specified range.

DESCRIPTIONS OF MONITOR METHODS

Manifold absolute pressure sensor output voltage is out of specified range.

MONITOR EXECUTION

Continuous

MONITOR EXECUTION CONDITIONS (Other monitor and Sensor)

Other Monitor (There is no temporary DTC stored in memory for the item monitored below)

- Not applicable

Sensor (The sensor below is determined to be normal)

- Engine coolant temperature sensor
- Throttle position sensor
- Volume airflow sensor
- Intake air temperature sensor
- Barometric pressure sensor

DTC SET CONDITIONS

Logic Flow Chart

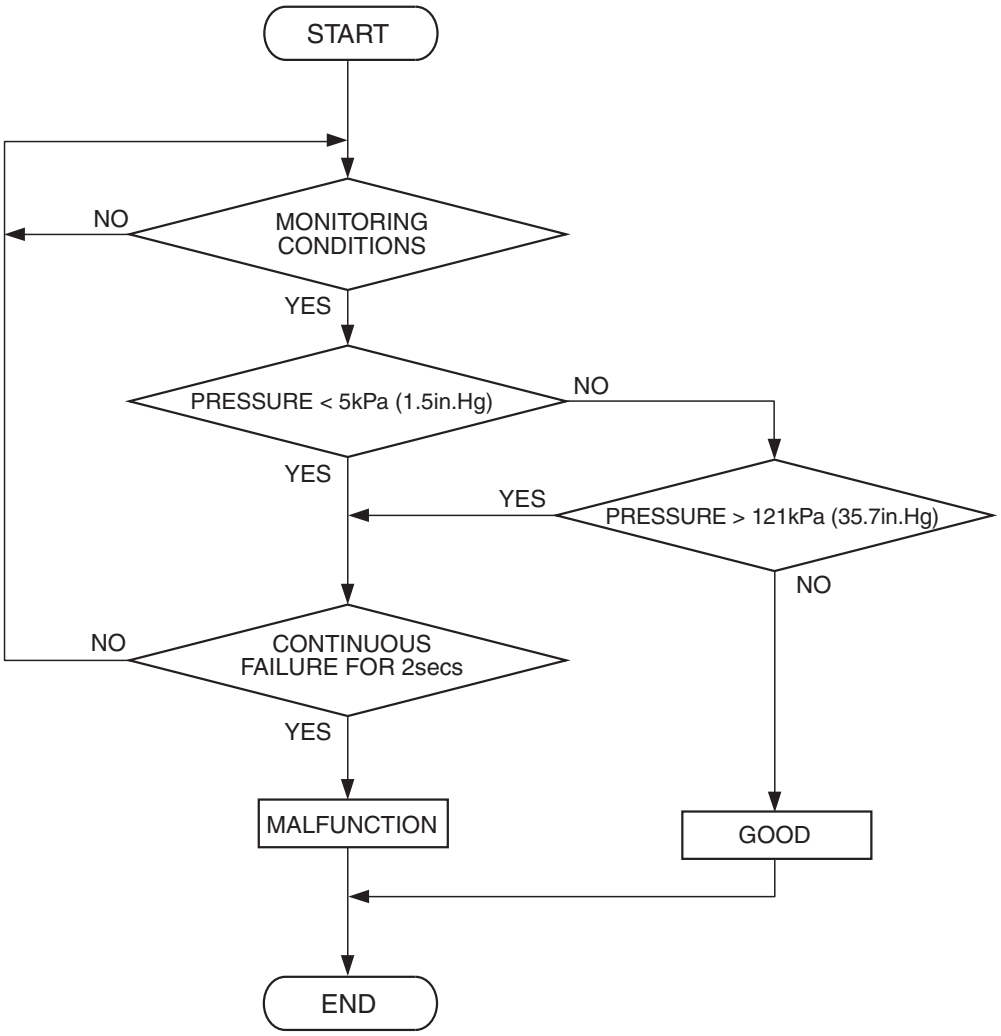

AK401727

Check conditions

Check Conditions

- 8 minutes or more have passed since the engine starting sequence was completed, when the engine coolant temperature at engine start is 0° C (32° F) or lower.
- Volumetric efficiency is higher than 20 percent.

Judgement Criterion

- Manifold absolute pressure is 5 kPa (1.5 in.Hg) or lower for 2 seconds.

OBD-II DRIVE CYCLE PATTERN

Refer to Diagnostic Function –OBD-II Drive Cycle – Pattern 7 P.13A-12.

TROUBLESHOOTING HINTS (The most likely causes for this code to be set are:)

- Manifold absolute pressure sensor failed.
- Open or shorted manifold absolute pressure sensor circuit, harness damage or connector damage.
- ECM failed.

DIAGNOSIS

Required Special Tools:

- MB991958: Scan Tool (M.U.T.-III Sub Assembly)
  - MB991824: V.C.I.
  - MB991827: USB Cable
  - MB991911: Main Harness B

STEP 1. Using scan tool MB991958, check data list item 95: Manifold Absolute Pressure Sensor.

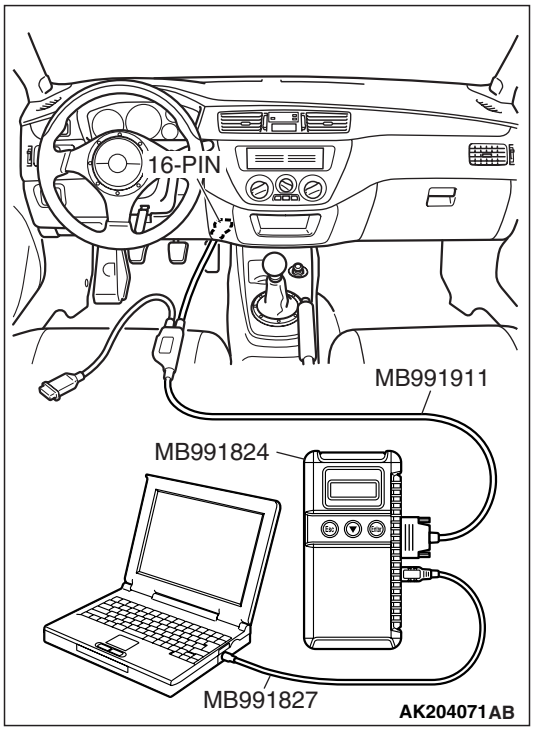

⚠ CAUTION

To prevent damage to scan tool MB991958, always turn the ignition switch to the "LOCK" (OFF) position before connecting or disconnecting scan tool MB991958.

(1) Connect scan tool MB991958 to the data link connector.
(2) Turn the ignition switch to the "ON" position.
(3) Set scan tool MB991958 to the data reading mode for item 95, Manifold Absolute Pressure Sensor.
  - When altitude is 0 m (0 foot), 101 kPa (29.8 in.Hg).
  - When altitude is 600 m (1,969 feet), 95 kPa (28.1 in.Hg).
  - When altitude is 1,200 m (3,937 feet), 88 kPa (26.0 in.Hg).
  - When altitude is 1,800 m (5,906 feet), 81 kPa (23.9 in.Hg).
(4) Start the engine.
  - When the engine is idling, 31 – 45 kPa (9.1 – 13.2 in.Hg).
  - When the engine is suddenly revved, manifold absolute pressure increases.
(5) Turn the ignition switch to the "LOCK" (OFF) position.

Q: Is the sensor operating properly?

YES : It can be assumed that this malfunction is intermittent. Refer to GROUP 00, How to Use Troubleshooting/Inspection Service Points –How to Cope with Intermittent Malfunctions P.00-13.

NO : Go to Step 2.

STEP 2. Measure the sensor output voltage at manifold absolute pressure sensor connector B-125 by backprobing.

(1) Do not disconnect the connector B-125.
(2) Turn the ignition switch to the "ON" position.

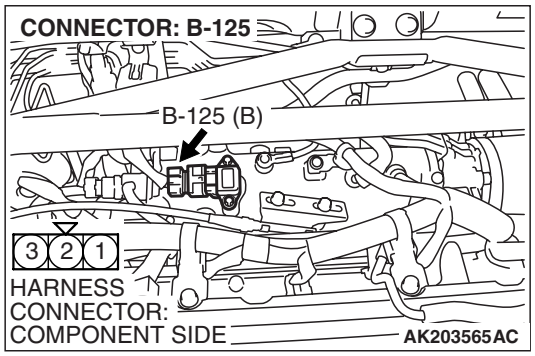

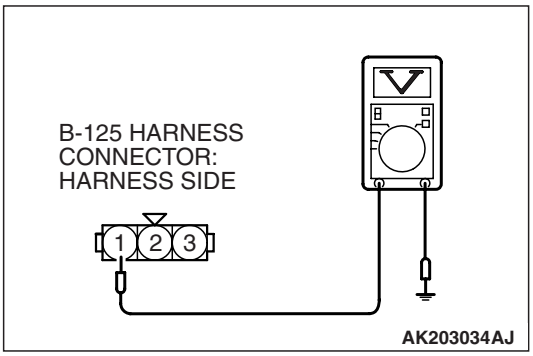

(3) Measure the voltage between terminal No. 1 and ground by backprobing.
- When altitude is 0 m (0 foot), voltage should be 3.8 and 4.2 volts.
- When altitude is 600 m (1,969 feet), voltage should be 3.5 and 3.9 volts.
- When altitude is 1,200 m (3,937 feet), voltage should be 3.3 and 3.7 volts.
- When altitude is 1,800 m (5,906 feet), voltage should be 3.0 and 3.4 volts.

(4) Turn the ignition switch to the "LOCK" (OFF) position.

Q: Is the measured voltage normal?

YES : Go to Step 3.
NO : Go to Step 7.

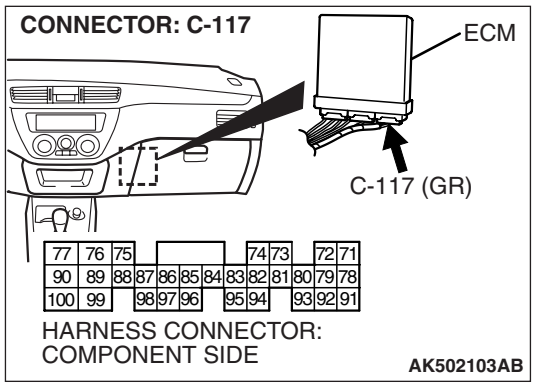

STEP 3. Measure the sensor output voltage at ECM connector C-117 by backprobing.

(1) Do not disconnect the connector C-117.

(2) Turn the ignition switch to the "ON" position.

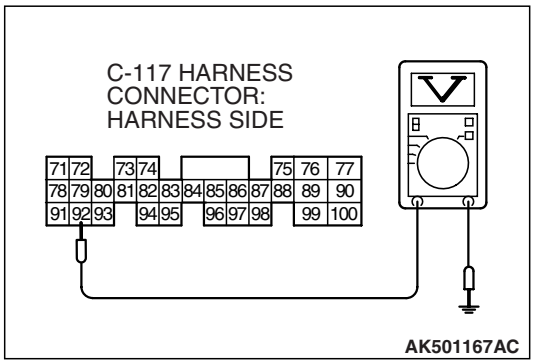

(3) Measure the voltage between terminal No. 92 and ground.
- When altitude is 0 m (0 foot), voltage should be 3.8 and 4.2 volts.
- When altitude is 600 m (1,969 feet), voltage should be 3.5 and 3.9 volts.
- When altitude is 1,200 m (3,937 feet), voltage should be 3.3 and 3.7 volts.
- When altitude is 1,800 m (5,906 feet), voltage should be 3.0 and 3.4 volts.

(4) Turn the ignition switch to the "LOCK" (OFF) position.

Q: Is the measured voltage normal?

YES : Go to Step 4.

NO : Go to Step 6.

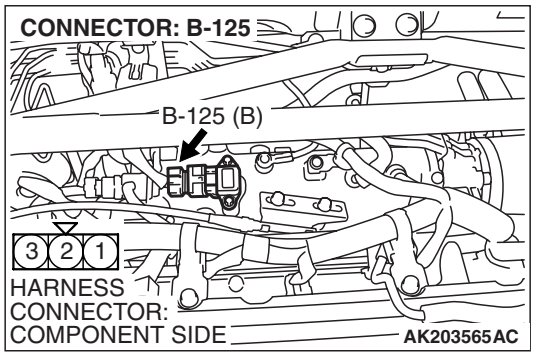

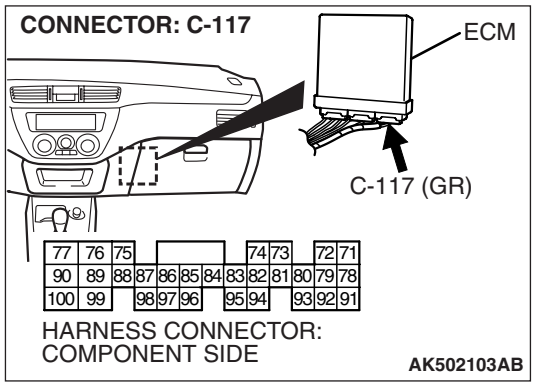

STEP 4. Check harness connector B-125 at the manifold absolute pressure sensor and connector C-117 at ECM for damage.

Q: Is the harness connector in good condition?

YES : Go to Step 5.

NO : Repair or replace it. Refer to GROUP 00E, Harness Connector Inspection P.00E-2. Then go to Step 18.

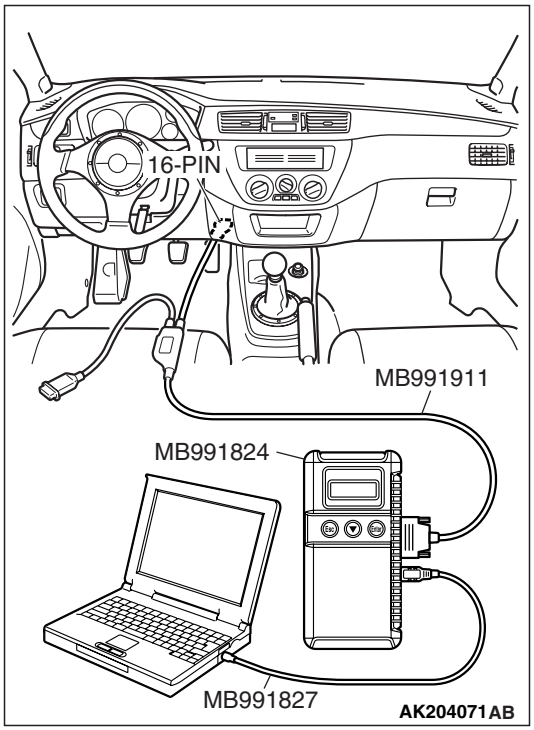

STEP 5. Using scan tool MB991958, check data list item 95: Manifold Absolute Pressure Sensor.

⚠ CAUTION

To prevent damage to scan tool MB991958, always turn the ignition switch to the "LOCK" (OFF) position before connecting or disconnecting scan tool MB991958.

(1) Connect scan tool MB991958 to the data link connector.
(2) Turn the ignition switch to the "ON" position.
(3) Set scan tool MB991958 to the data reading mode for item 95, Manifold Absolute Pressure Sensor.
- When altitude is 0 m (0 foot), 101 kPa (29.8 in.Hg).
- When altitude is 600 m (1,969 feet), 95 kPa (28.1 in.Hg).
- When altitude is 1,200 m (3,937 feet), 88 kPa (26.0 in.Hg).
- When altitude is 1,800 m (5,906 feet), 81 kPa (23.9 in.Hg).

(4) Start the engine.
- When the engine is idling, 31 – 45 kPa (9.1 – 13.2 in.Hg).
- When the engine is suddenly revved, manifold absolute pressure increases.

(5) Turn the ignition switch to the "LOCK" (OFF) position.

Q: Is the sensor operating properly?

YES : It can be assumed that this malfunction is intermittent. Refer to GROUP 00, How to Use Troubleshooting/Inspection Service Points –How to Cope with Intermittent Malfunctions P.00-13.

NO : Replace the ECM. Then go to Step 18.

STEP 6. Check harness connector B-125 at the manifold absolute pressure sensor and connector C-117 at ECM for damage.

Q: Is the harness connector in good condition?

YES : Repair harness wire between manifold absolute pressure sensor connector B-125 (terminal No. 1) and ECM connector C-117 (terminal No. 92) because of open circuit or harness damage. Then go to Step 18.

NO : Repair or replace it. Refer to GROUP 00E, Harness Connector Inspection P.00E-2. Then go to Step 18.

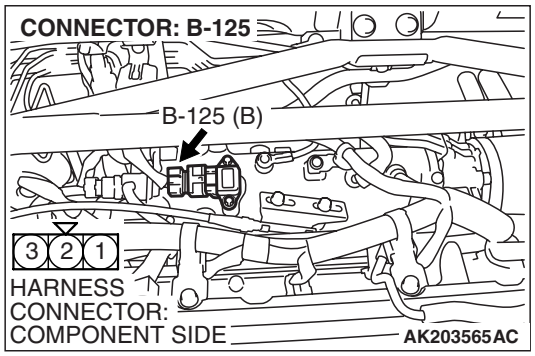

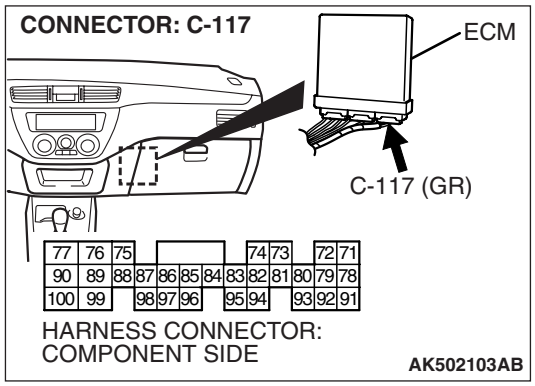

STEP 7. Measure the sensor supply voltage at manifold absolute pressure sensor connector B-125 by backprobing.

(1) Do not disconnect the connector B-125.

(2) Turn the ignition switch to the "ON" position.

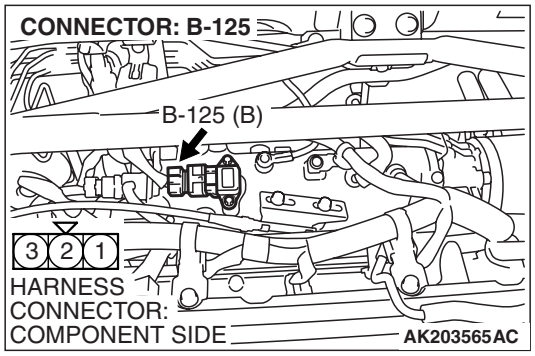

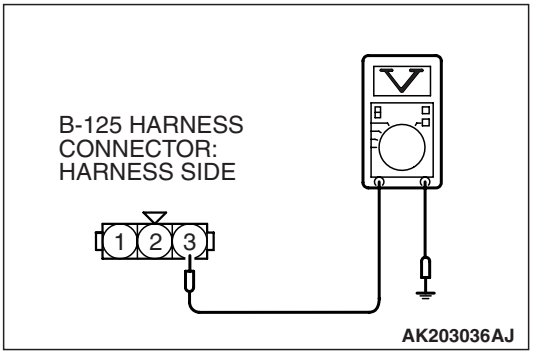

(3) Measure the voltage between terminal No. 3 and ground by backprobing.
- Voltage should be between 4.8 and 5.2 volts.

(4) Turn the ignition switch to the "LOCK" (OFF) position.

Q: Is the measured voltage between 4.8 and 5.2 volts?

YES : Go to Step 12.

NO : Go to Step 8.

STEP 8. Measure the sensor supply voltage at ECM connector C-119 by backprobing.

(1) Do not disconnect the connector C-119.
(2) Turn the ignition switch to the "ON" position.

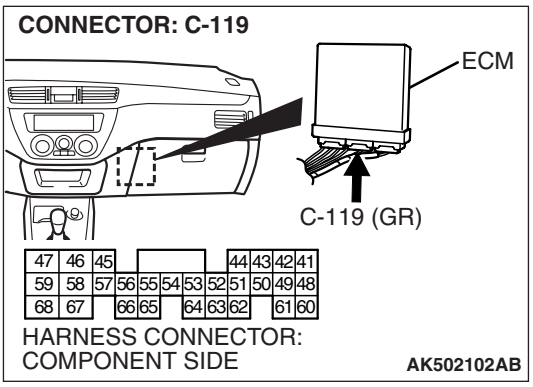

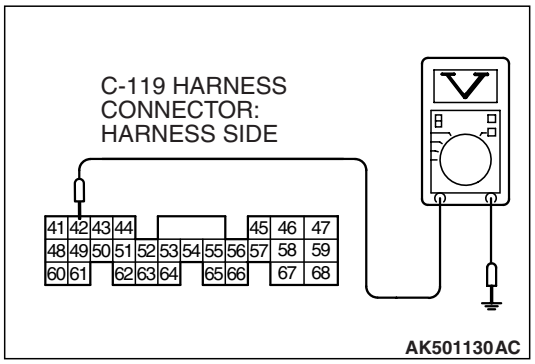

(3) Measure the voltage between terminal No. 42 and ground.
- Voltage should be between 4.8 and 5.2 volts.

(4) Turn the ignition switch to the "LOCK" (OFF) position.

Q: Is the measured voltage between 4.8 and 5.2 volts?

YES : Go to Step 9.
NO : Go to Step 10.

STEP 9. Check harness connector B-125 at the manifold absolute pressure sensor and connector C-119 at ECM for damage.

Q: Is the harness connector in good condition?

YES : Repair harness wire between manifold absolute pressure sensor connector B-125 (terminal No. 3) and ECM connector C-119 (terminal No. 42) because of open circuit or harness damage. Then go to Step 18.
NO : Repair or replace it. Refer to GROUP 00E, Harness Connector Inspection P.00E-2. Then go to Step 18.

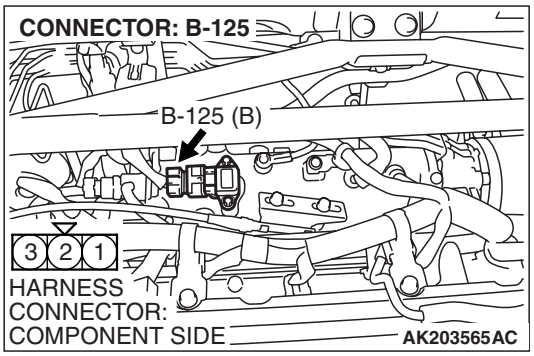

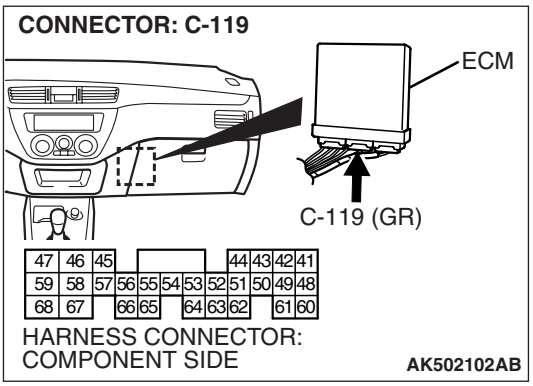

STEP 10. Check harness connector B-125 at the manifold absolute pressure sensor and connector C-119 at ECM for damage.

Q: Is the harness connector in good condition?

YES : Go to Step 11.

NO : Repair or replace it. Refer to GROUP 00E, Harness Connector Inspection P.00E-2. Then go to Step 18.

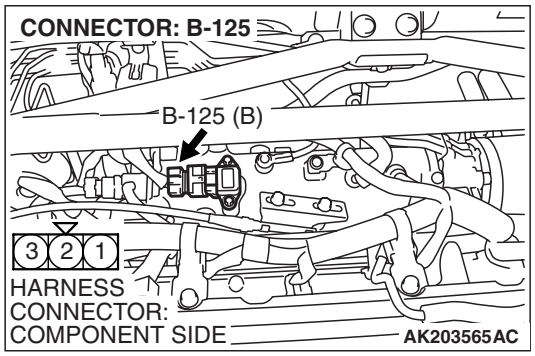

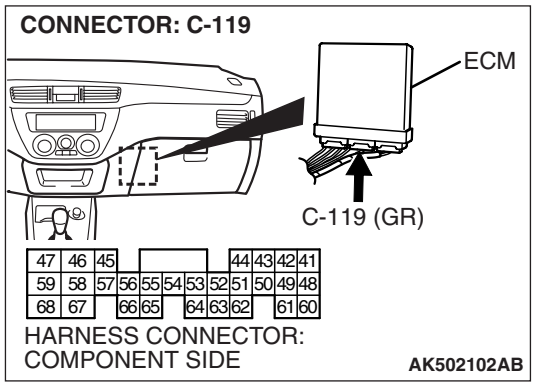

STEP 11. Check for short circuit to ground between manifold absolute pressure sensor connector B-125 (terminal No. 3) and ECM connector C-119 (terminal No. 42).

Q: Is the harness wire in good condition?

YES : Replace the ECM. Then go to Step 18.

NO : Repair it. Then go to Step 18.

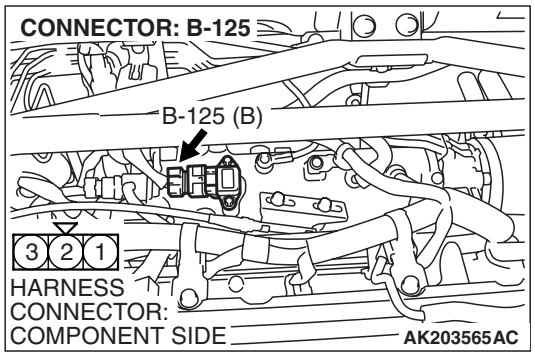

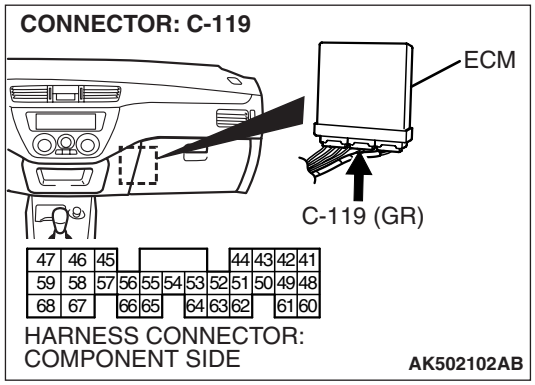

STEP 12. Measure the ground voltage at manifold absolute pressure sensor connector B-125 by backprobing.

(1) Do not disconnect the connector B-125.
(2) Turn the ignition switch to the "ON" position.

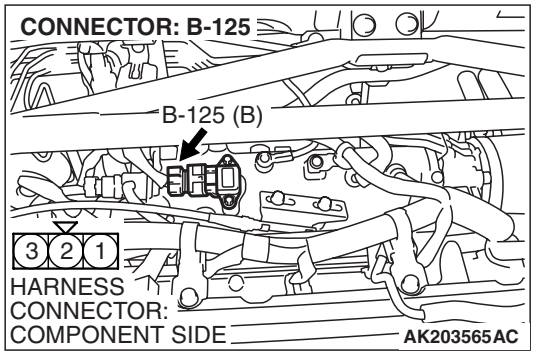

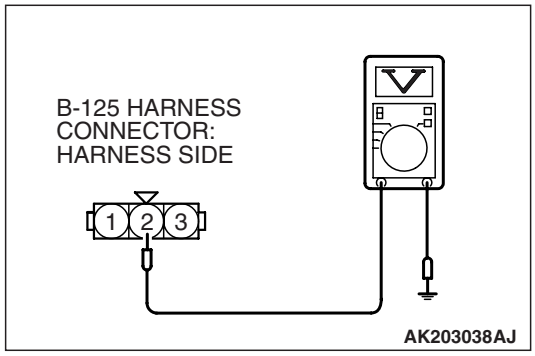

(3) Measure the voltage between terminal No. 2 and ground by backprobing.
- Voltage should be 0.5 volt or less.

(4) Turn the ignition switch to the "LOCK" (OFF) position.

Q: Is the measured voltage 0.5 volt or less?

YES : Go to Step 15.
NO : Go to Step 13.

STEP 13. Check harness connector B-125 at the manifold absolute pressure sensor and connector C-119 at ECM for damage.

Q: Is the harness connector in good condition?

YES : Go to Step 14.
NO : Repair or replace it. Refer to GROUP 00E, Harness Connector Inspection P.00E-2. Then go to Step 18.

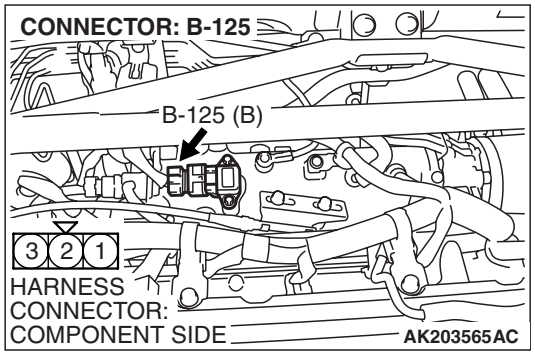

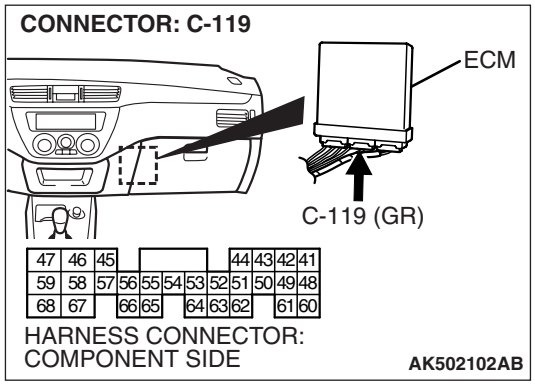

STEP 14. Check for harness damage between manifold absolute pressure sensor connector B-125 (terminal No. 2) and ECM connector C-119 (terminal No. 49).

Q: Is the harness wire in good condition?

YES : Replace the ECM. Then go to Step 18.

NO : Repair it. Then go to Step 18.

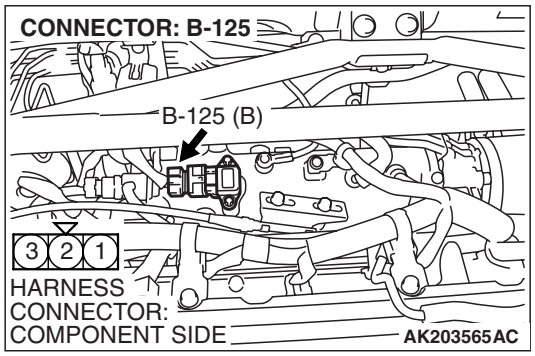

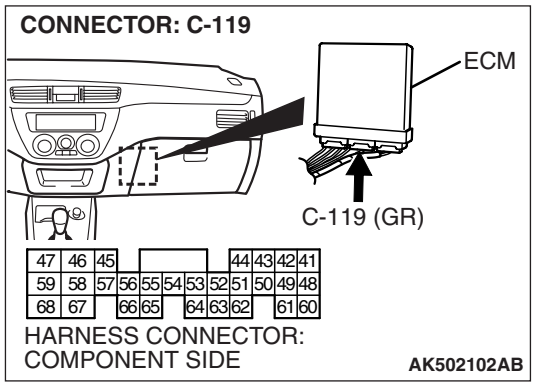

STEP 15. Check harness connector B-125 at manifold absolute pressure sensor for damage.

Q: Is the harness connector in good condition?

YES : Go to Step 16.

NO : Repair or replace it. Refer to GROUP 00E, Harness Connector Inspection P.00E-2. Then go to Step 18.

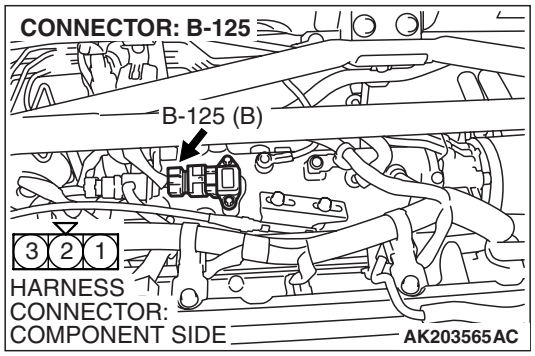

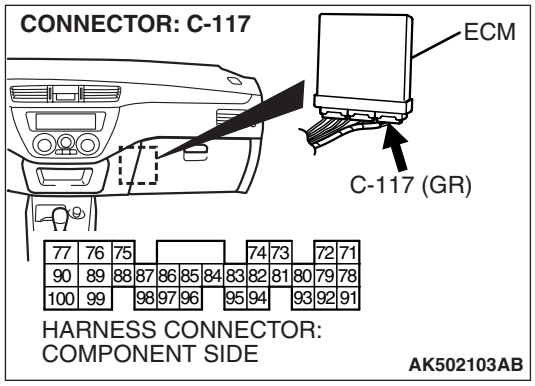

STEP 16. Check harness connector C-117 at ECM for damage.

Q: Is the harness connector in good condition?

YES : Go to Step 17.

NO : Repair or replace it. Refer to GROUP 00E, Harness Connector Inspection P.00E-2. Then go to Step 18.

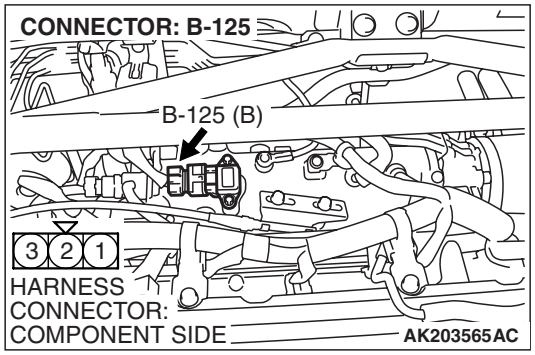

STEP 17. Check for short circuit to ground and harness damage between manifold absolute pressure sensor connector B-125 (terminal No. 1) and ECM connector C-117 (terminal No. 92).

Q: Is the harness wire in good condition?

YES : Replace the manifold absolute pressure sensor. Then go to Step 18.

NO : Repair it. Then go to Step 18.

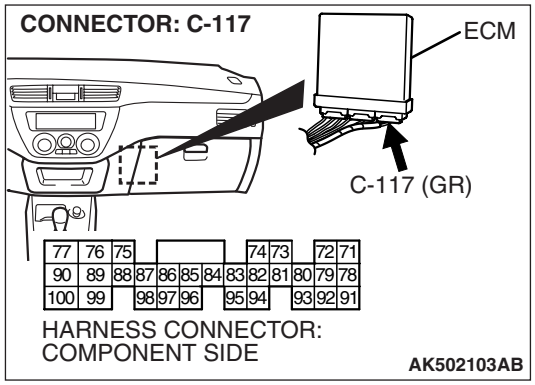

STEP 18. Test the OBD-II drive cycle.

(1) Carry out a test drive with the drive cycle pattern. Refer to Diagnostic Function –OBD-II Drive Cycle –Pattern 7 P.13A-12.

(2) Check the diagnostic trouble code (DTC).

Q: Is DTC P0107 set?

YES : Retry the troubleshooting.

NO : The inspection is complete.

DTC P0108: Manifold Absolute Pressure Circuit High Input

Manifold Absolute Pressure Sensor Circuit

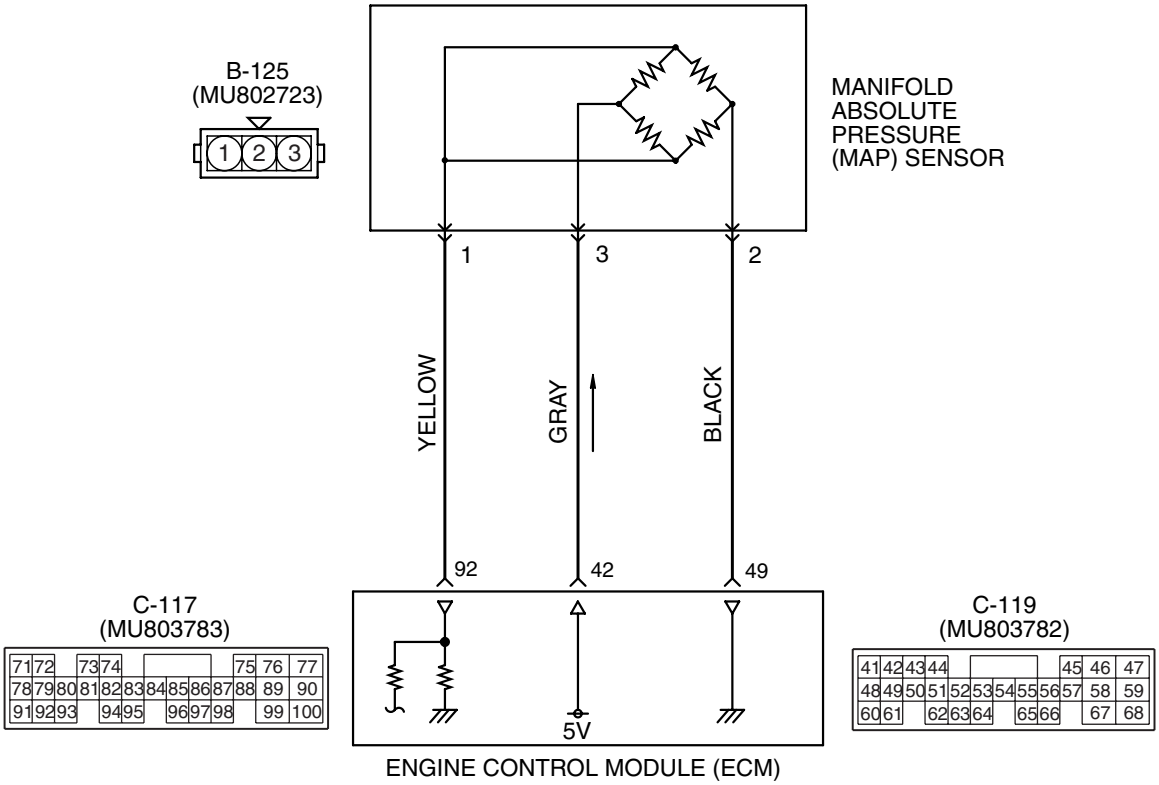

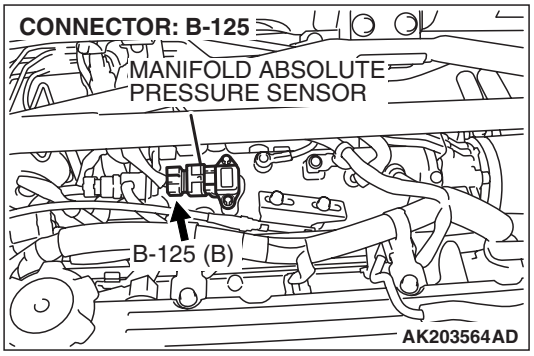

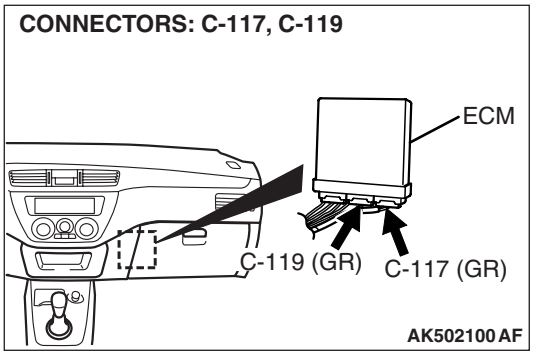

CIRCUIT OPERATION

- A 5-volt voltage is supplied to the manifold absolute pressure sensor power terminal (terminal No. 3) from ECM (terminal No. 42). The ground terminal (terminal No. 2) is grounded with the ECM (terminal No. 49).
- A voltage that is proportional to the intake manifold pressure is sent to the ECM (terminal No. 92) from the manifold absolute pressure sensor output terminal (terminal No. 1).

TECHNICAL DESCRIPTION

- The manifold absolute pressure sensor outputs a voltage which corresponds to the intake manifold pressure.
- The ECM checks whether this voltage is within a specified range.

DESCRIPTIONS OF MONITOR METHODS

Manifold absolute pressure sensor output voltage is out of specified range.

MONITOR EXECUTION

Continuous

MONITOR EXECUTION CONDITIONS (Other monitor and Sensor)

Other Monitor (There is no temporary DTC stored in memory for the item monitored below)

- Not applicable

Sensor (The sensor below is determined to be normal)

- Engine coolant temperature sensor
- Throttle position sensor
- Volume airflow sensor
- Intake air temperature sensor
- Barometric pressure sensor

DTC SET CONDITION

Logic Flow Chart

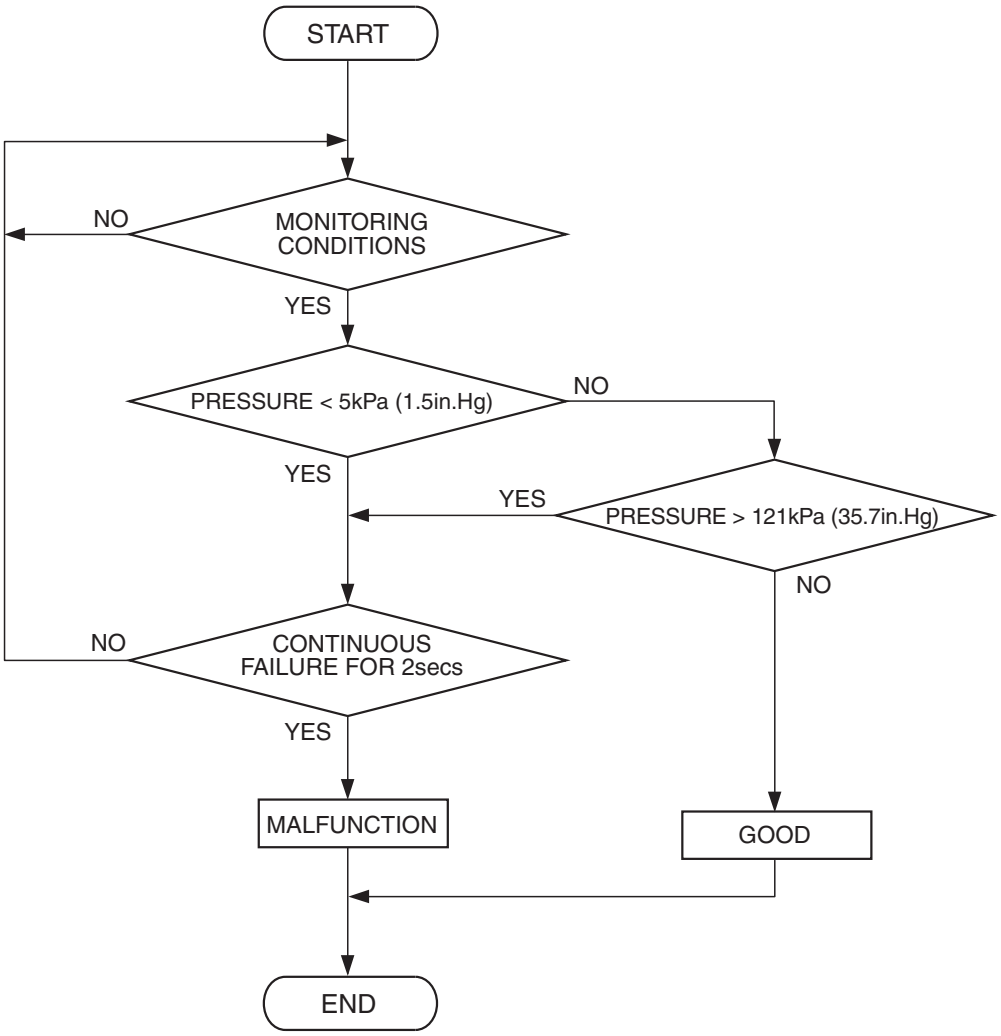

AK401727

Check Conditions

- 8 minutes or more have passed since the engine starting sequence was completed, when the engine coolant temperature at engine start is 0° C (32° F) or lower.
- Volumetric efficiency is lower than 75 percent.

Judgement Criterion

- Manifold absolute pressure is 121 kPa (35.7 in.Hg) or higher for 2 seconds.

OBD-II DRIVE CYCLE PATTERN

Refer to Diagnostic Function –OBD-II Drive Cycle – Pattern 23 P.13A-12.

TROUBLESHOOTING HINTS (The most likely causes for this code to be set are:)

- Manifold absolute pressure sensor failed.
- Open manifold absolute pressure sensor circuit, or connector damage.
- ECM failed.

DIAGNOSIS

Required Special Tools:

- MB991958: Scan Tool (M.U.T.-III Sub Assembly)
  - MB991824: V.C.I.
  - MB991827: USB Cable
  - MB991911: Main Harness B

STEP 1. Using scan tool MB991958, check data list item 95: Manifold Absolute Pressure Sensor.

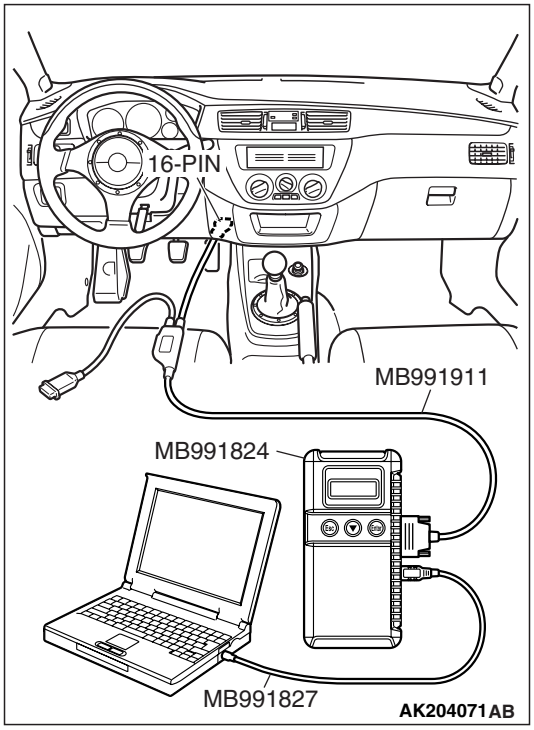

⚠ CAUTION

To prevent damage to scan tool MB991958, always turn the ignition switch to the "LOCK" (OFF) position before connecting or disconnecting scan tool MB991958.

(1) Connect scan tool MB991958 to the data link connector.
(2) Turn the ignition switch to the "ON" position.
(3) Set scan tool MB991958 to the data reading mode for item 95, Manifold Absolute Pressure Sensor.
  - When altitude is 0 m (0 foot), 101 kPa (29.8 in.Hg).
  - When altitude is 600 m (1,969 feet), 95 kPa (28.1 in.Hg).
  - When altitude is 1,200 m (3,937 feet), 88 kPa (26.0 in.Hg).
  - When altitude is 1,800 m (5,906 feet), 81 kPa (23.9 in.Hg).
(4) Start the engine.
  - When the engine is idling, 31 – 45 kPa (9.1 – 13.2 in.Hg).
  - When the engine is suddenly revved, manifold absolute pressure increases.
(5) Turn the ignition switch to the "LOCK" (OFF) position.

Q: Is the sensor operating properly?

YES : It can be assumed that this malfunction is intermittent. Refer to GROUP 00, How to Use Troubleshooting/Inspection Service Points –How to Cope with Intermittent Malfunctions P.00-13.

NO : Go to Step 2.

STEP 2. Measure the sensor output voltage at manifold absolute pressure sensor connector B-125 by backprobing.

(1) Do not disconnect the connector B-125.
(2) Turn the ignition switch to the "ON" position.

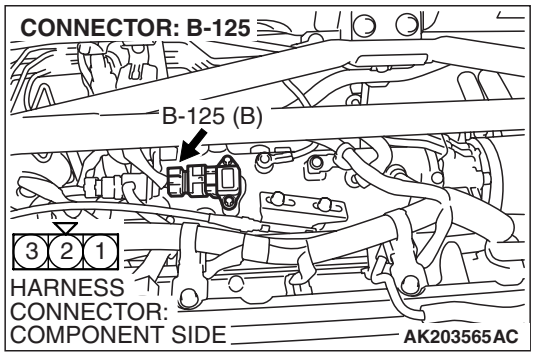

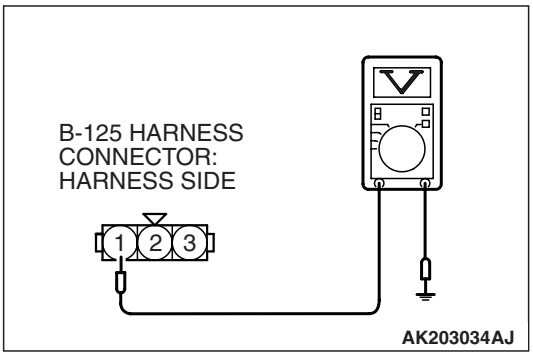

(3) Measure the voltage between terminal No. 1 and ground by backprobing.
- When altitude is 0 m (0 foot), voltage should be 3.8 and 4.2 volts.
- When altitude is 600 m (1,969 feet), voltage should be 3.5 and 3.9 volts.
- When altitude is 1,200 m (3,937 feet), voltage should be 3.3 and 3.7 volts.
- When altitude is 1,800 m (5,906 feet), voltage should be 3.0 and 3.4 volts.

(4) Turn the ignition switch to the "LOCK" (OFF) position.

Q: Is the measured voltage normal?

YES : Go to Step 3.
NO : Go to Step 5.

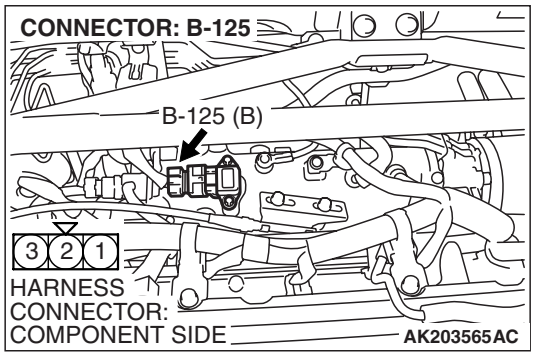

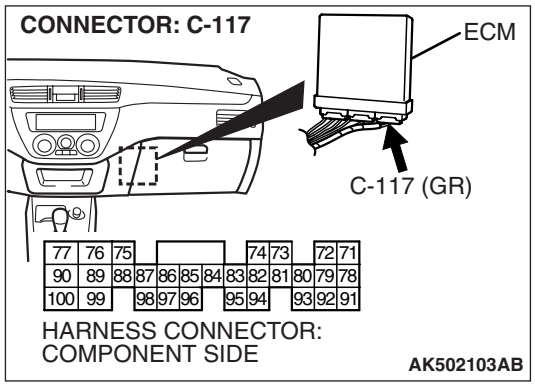

STEP 3. Check harness connector B-125 at the manifold absolute pressure sensor and connector C-117 at ECM for damage.

Q: Is the harness connector in good condition?

YES : Go to Step 4.

NO : Repair or replace it. Refer to GROUP 00E, Harness Connector Inspection P.00E-2. Then go to Step 12.

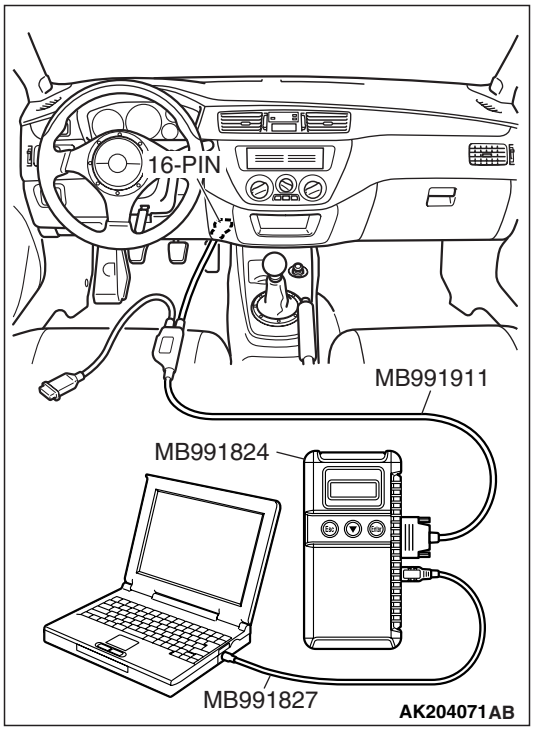

STEP 4. Using scan tool MB991958, check data list item 95: Manifold Absolute Pressure Sensor.

⚠ CAUTION

To prevent damage to scan tool MB991958, always turn the ignition switch to the "LOCK" (OFF) position before connecting or disconnecting scan tool MB991958.

(1) Connect scan tool MB991958 to the data link connector.
(2) Turn the ignition switch to the "ON" position.
(3) Set scan tool MB991958 to the data reading mode for item 95, Manifold Absolute Pressure Sensor.
- When altitude is 0 m (0 foot), 101 kPa (29.8 in.Hg).
- When altitude is 600 m (1,969 feet), 95 kPa (28.1 in.Hg).
- When altitude is 1,200 m (3,937 feet), 88 kPa (26.0 in.Hg).
- When altitude is 1,800 m (5,906 feet), 81 kPa (23.9 in.Hg).

(4) Start the engine.
- When the engine is idling, 31 – 45 kPa (9.1 –13.2 in.Hg).
- When the engine is suddenly revved, manifold absolute pressure increases.

(5) Turn the ignition switch to the "LOCK" (OFF) position.

Q: Is the sensor operating properly?

YES : It can be assumed that this malfunction is intermittent. Refer to GROUP 00, How to Use Troubleshooting/Inspection Service Points –How to Cope with Intermittent Malfunctions P.00-13.

NO : Replace the ECM. Then go to Step 12.

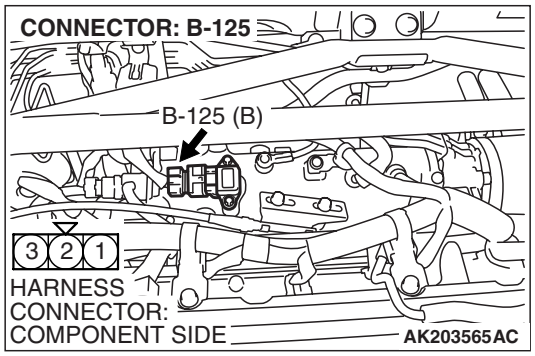

STEP 5. Measure the sensor supply voltage at manifold absolute pressure sensor connector B-125 by backprobing.

(1) Do not disconnect the connector B-125.
(2) Turn the ignition switch to the "ON" position.

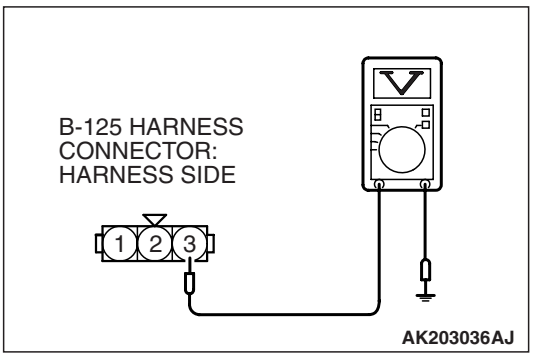

(3) Measure the voltage between terminal No. 3 and ground by backprobing.
- Voltage should be between 4.8 and 5.2 volts.

(4) Turn the ignition switch to the "LOCK" (OFF) position.

Q: Is the measured voltage between 4.8 and 5.2 volts?

YES : Go to Step 7.

NO : Go to Step 6.

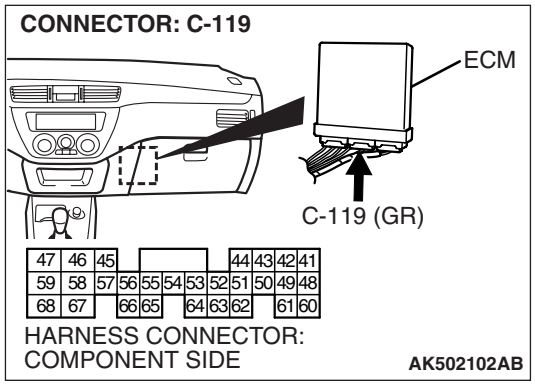

STEP 6. Check harness connector C-119 at ECM for damage.

Q: Is the harness connector in good condition?

YES : Replace the ECM. Then go to Step 12.

NO : Repair or replace it. Refer to GROUP 00E, Harness Connector Inspection P.00E-2. Then go to Step 12.

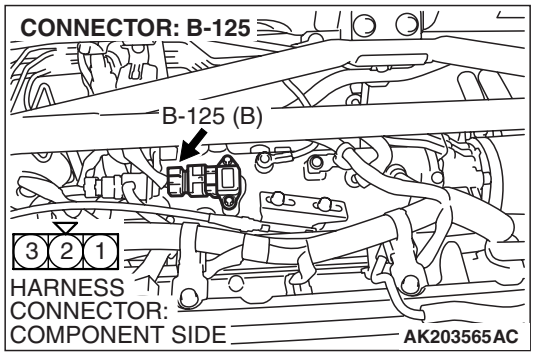

STEP 7. Measure the ground voltage at manifold absolute pressure sensor connector B-125 by backprobing.

(1) Do not disconnect the connector B-125.

(2) Turn the ignition switch to the "ON" position.

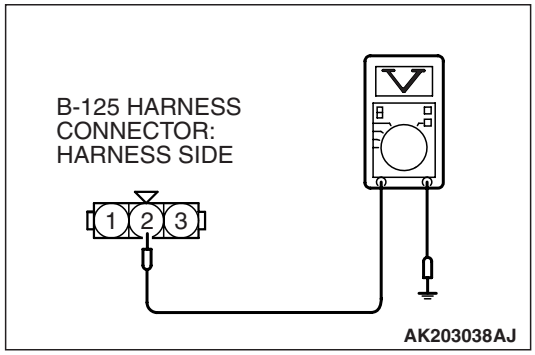

(3) Measure the voltage between terminal No. 2 and ground by backprobing.
- Voltage should be 0.5 volt or less.

(4) Turn the ignition switch to the "LOCK" (OFF) position.

Q: Is the measured voltage 0.5 volt or less?

YES : Go to Step 10.

NO : Go to Step 8.

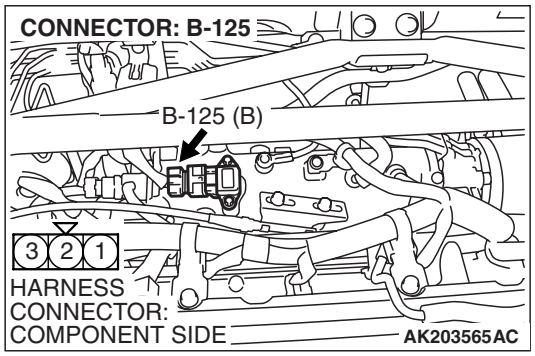

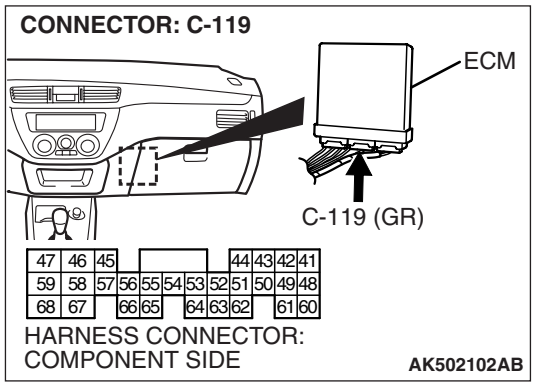

STEP 8. Check harness connector B-125 at the manifold absolute pressure sensor and connector C-119 at ECM for damage.

Q: Is the harness connector in good condition?

YES : Go to Step 9.

NO : Repair or replace it. Refer to GROUP 00E, Harness Connector Inspection P.00E-2. Then go to Step 12.

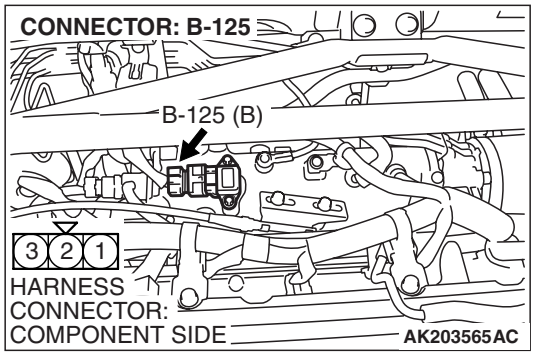

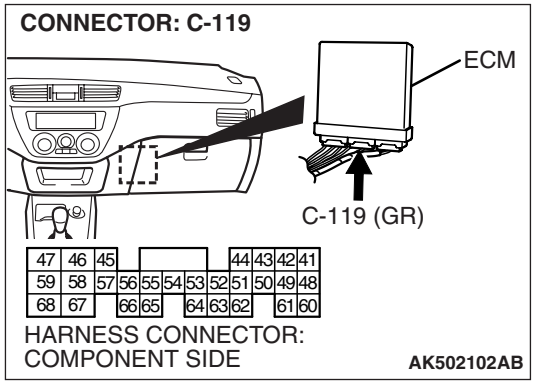

STEP 9. Check for open circuit between manifold absolute pressure sensor connector B-125 (terminal No. 2) and ECM connector C-119 (terminal No. 49).

Q: Is the harness wire in good condition?

YES : Replace the ECM. Then go to Step 12.

NO : Repair it. Then go to Step 12.

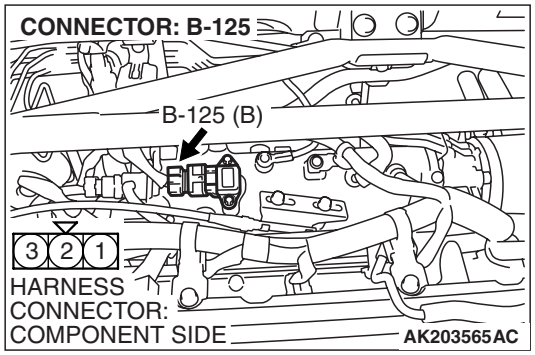

STEP 10. Check harness connector B-125 at manifold absolute pressure sensor for damage.

Q: Is the harness connector in good condition?

YES : Go to Step 11.

NO : Repair or replace it. Refer to GROUP 00E, Harness Connector Inspection P.00E-2. Then go to Step 12.

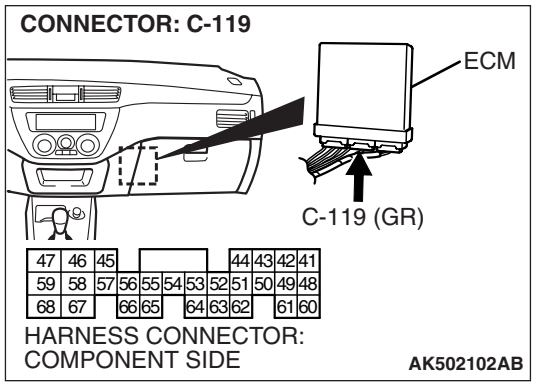

STEP 11. Check harness connector C-119 at ECM for damage.

Q: Is the harness connector in good condition?

YES : Replace the manifold absolute pressure sensor. Then go to Step 12.

NO : Repair or replace it. Refer to GROUP 00E, Harness Connector Inspection P.00E-2. Then go to Step 12.

STEP 12. Test the OBD-II drive cycle.

(1) Carry out a test drive with the drive cycle pattern. Refer to Diagnostic Function –OBD-II Drive Cycle –Pattern 23 P.13A-12.

(2) Check the diagnostic trouble code (DTC).

Q: Is DTC P0108 set?

YES : Retry the troubleshooting.

NO : The inspection is complete.

DTC P0111: Intake Air Temperature Circuit Range/Performance Problem

Intake Air Temperature Sensor Circuit

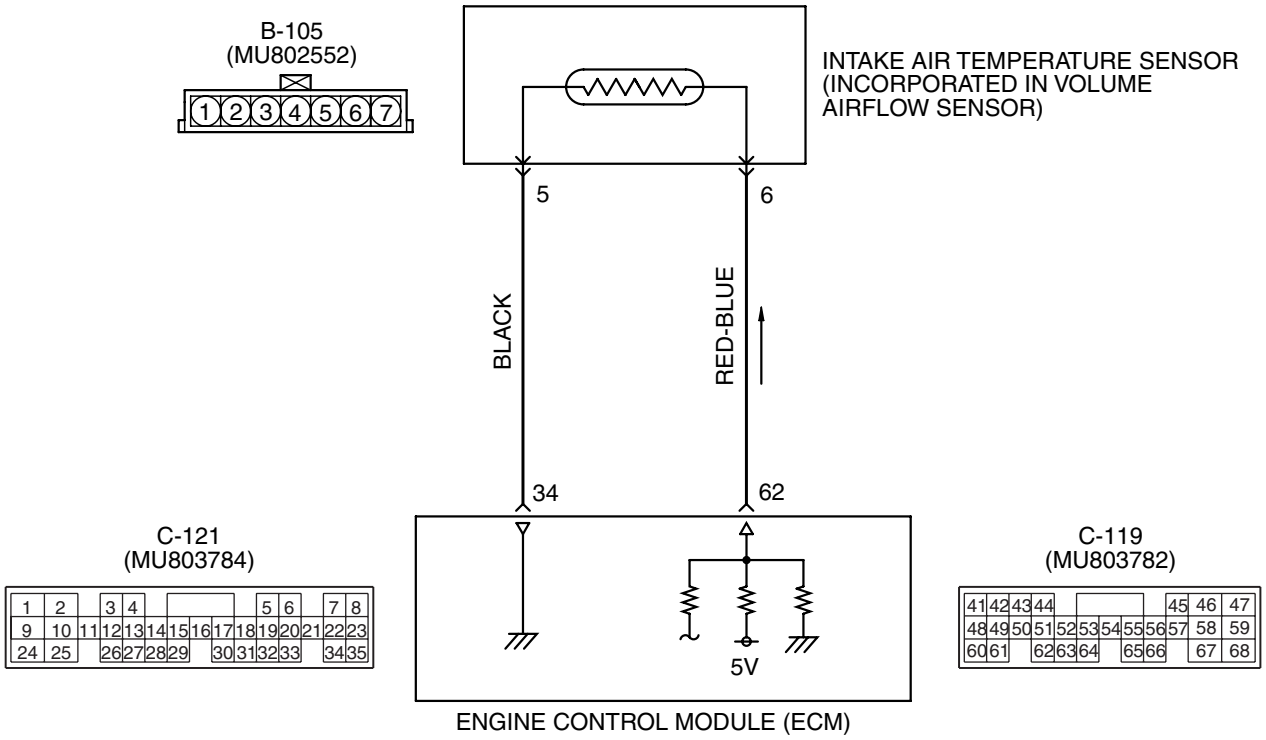

AK502063

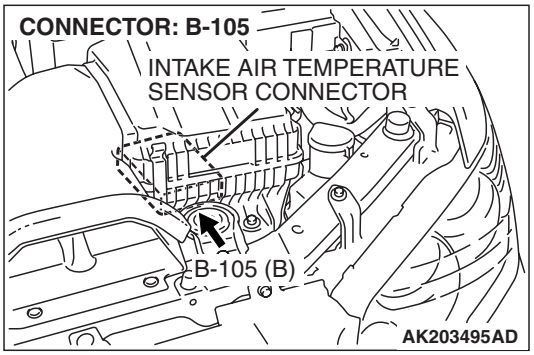

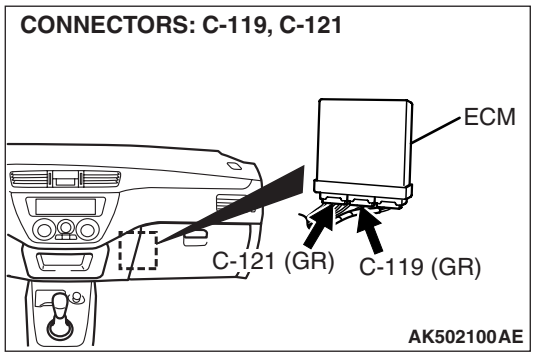

CIRCUIT OPERATION

- Approximately 5 volts are applied to the intake air temperature sensor output terminal (terminal No. 6) from the ECM (terminal No. 62) via the resistor in the ECM. The ground terminal (terminal No. 5) is grounded with ECM (terminal No. 34).
- The intake air temperature sensor is a negative temperature coefficient type of resistor. When the intake air temperature rises, the resistance decreases.
- The intake air temperature sensor output voltage increases when the resistance increases and decreases when the resistance decreases.

TECHNICAL DESCRIPTION

- The intake air temperature sensor converts the intake air temperature to a voltage.
- The ECM checks whether this voltage is within a specified range.

DESCRIPTIONS OF MONITOR METHODS

- Intake air temperature sensor output voltage does not change when specified go/stop operations are repeated.

TSB Revision

MONITOR EXECUTION

- Continuous

MONITOR EXECUTION CONDITIONS (Other monitor and Sensor)

Other Monitor (There is no temporary DTC stored in memory for the item monitored below)

- Not applicable

Sensor (The sensor below is determined to be normal)

- Not applicable

DTC SET CONDITIONS

Logic Flow Chart

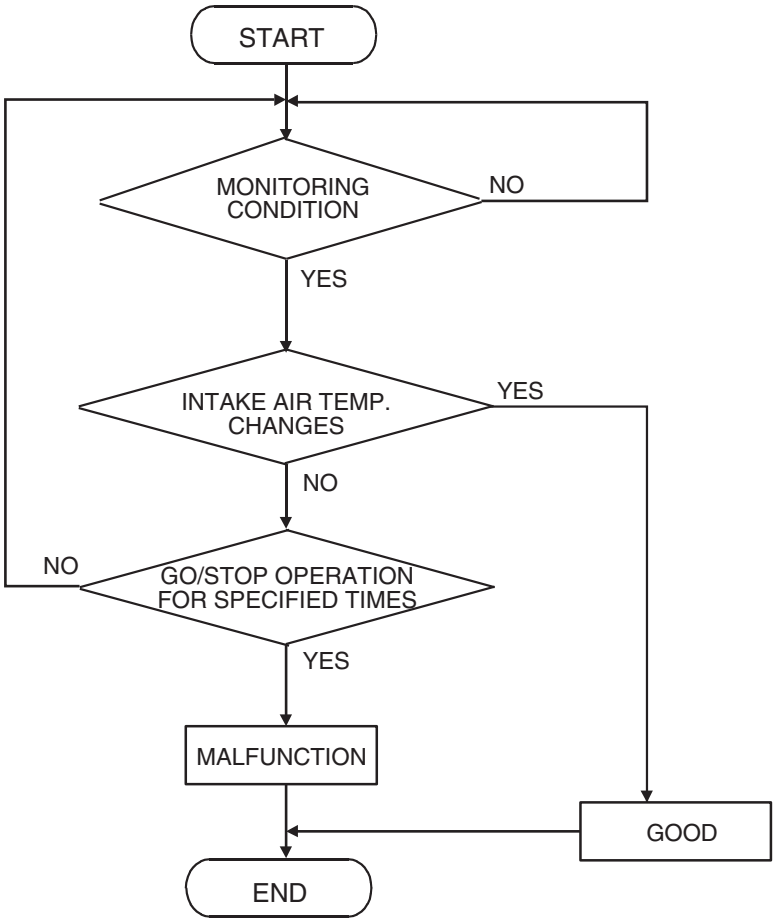

AK305536

Check Conditions

- Engine coolant temperature is higher than 76° C (169° F).
- Repeat 2 or more times: drive*1, stop*2.
  Drive*1: vehicle speed higher than 50 km/h (31 mph) lasting a total of more than 60 seconds.
  Stop*2: vehicle speed lower than 1.5 km/h (1 mph) lasting more than 30 seconds.

Judgement Criterion

- Changes in the intake air temperature is lower than 1° C (34° F).

TSB Revision

OBD-II DRIVE CYCLE PATTERN

Refer to Diagnostic Function –OBD-II Drive Cycle – Pattern 8 P.13A-12.

TROUBLESHOOTING HINTS (The most likely causes for this code to be set are:)

- Intake air temperature sensor failed.
- Open intake air temperature sensor circuit, harness damage, or connector damage.
- ECM failed.

DIAGNOSIS

Required Special Tools:

- MB991958: Scan Tool (M.U.T.-III Sub Assembly)
  - MB991824: V.C.I.
  - MB991827: USB Cable
  - MB991911: Main Harness B

STEP 1. Using scan tool MB991958, check data list item 13: Intake Air Temperature Sensor.

⚠ CAUTION

To prevent damage to scan tool MB991958, always turn the ignition switch to the "LOCK" (OFF) position before connecting or disconnecting scan tool MB991958.

(1) Connect scan tool MB991958 to the data link connector.
(2) Remove the air intake hose from the volume airflow sensor.
(3) Turn the ignition switch to the "ON" position.
(4) Set scan tool MB991958 to the data reading mode for item 13, Intake Air Temperature Sensor.

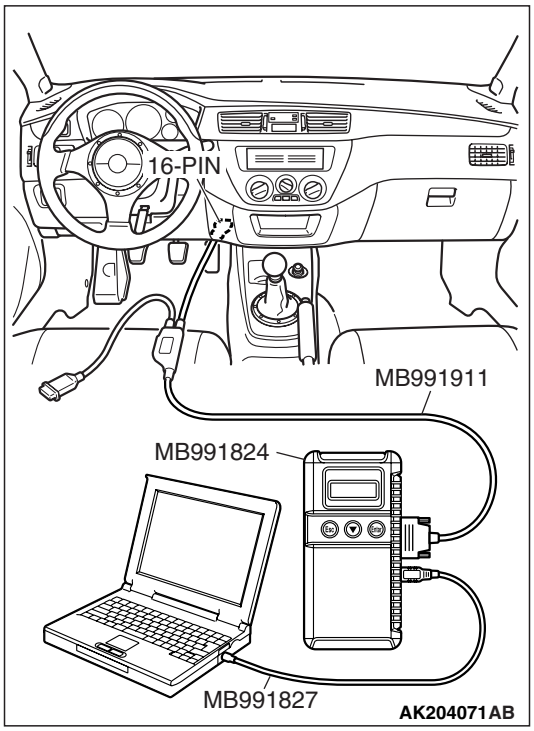

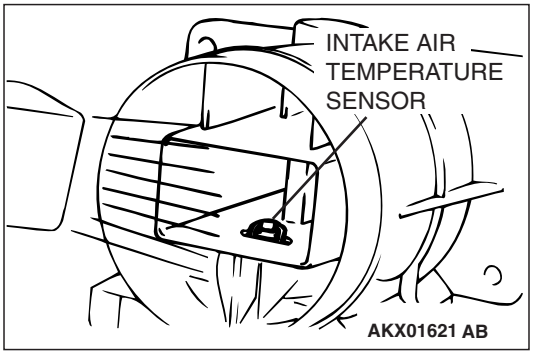

(5) Heat the sensor using a hair dryer.
  - The indicated temperature increases.

  NOTE: Do not allow it to increase over 80°C (176°F).

(6) Turn the ignition switch to the "LOCK" (OFF) position.
(7) Attach the air intake hose.

Q: Is the sensor operating properly?

YES : It can be assumed that this malfunction is intermittent. Refer to GROUP 00, How to Use Troubleshooting/Inspection Service Points –How to Cope with Intermittent Malfunctions P.00-13.

NO : Go to Step 2.

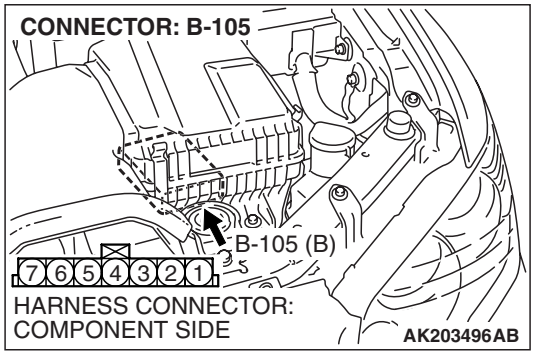

STEP 2. Check the intake air temperature sensor.

(1) Disconnect the intake air temperature sensor connector B-105.

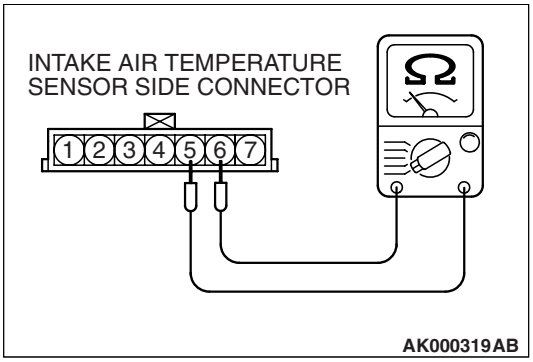

(2) Measure the resistance between intake air temperature sensor side connector terminals No. 5 and No. 6.

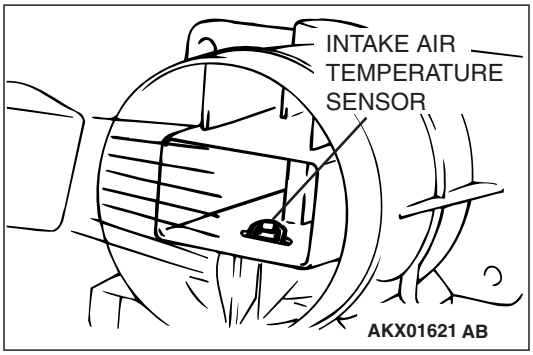

(3) Measure resistance while heating the sensor using a hair drier.

Standard value:

13 – 17 kΩ [at – 20° C (– 4° F)]
5.3 – 6.7 kΩ [at 0° C (32° F)]
2.3 – 3.0 kΩ [at 20° C (68° F)]
1.0 – 1.5 kΩ [at 40° C (104° F)]
0.56 – 0.76 kΩ [at 60° C (140° F)]
0.30 – 0.42 kΩ [at 80° C (176° F)]

Q: Is the measured resistance at the standard value?

YES : Go to Step 3.
NO : Replace the volume airflow sensor. Then go to Step 9.

STEP 3. Check harness connector B-105 at the intake air temperature sensor for damage.

Q: Is the harness connector in good condition?

YES : Go to Step 4.
NO : Repair or replace it. Refer to GROUP 00E, Harness Connector Inspection P.00E-2. Then go to Step 9.

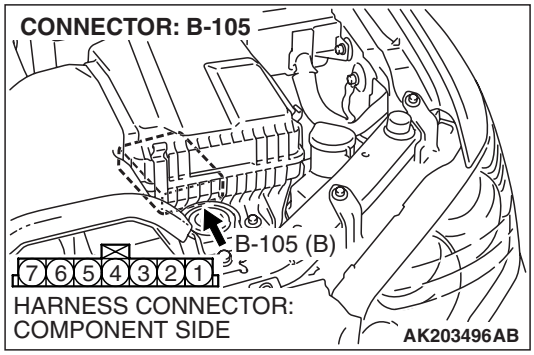

STEP 4. Check for continuity at intake air temperature sensor harness side connector B-105.

(1) Disconnect connector B-105 and measure at the harness side.

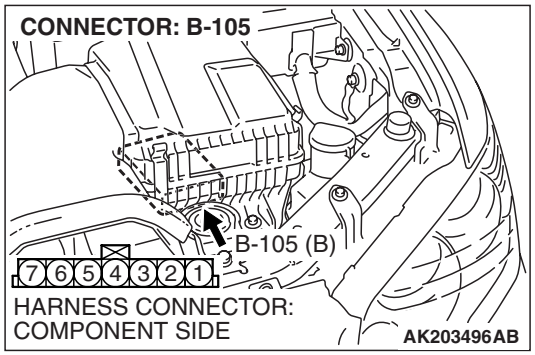

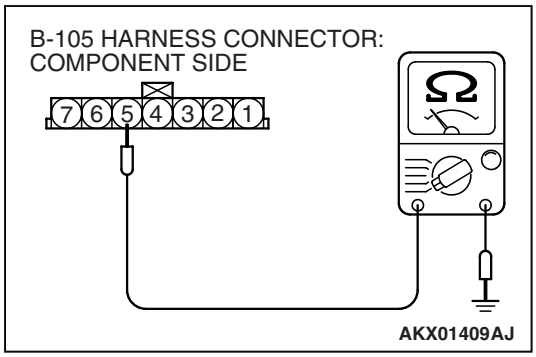

(2) Check for the continuity between terminal No. 5 and ground.
- Should be less than 2 ohms.

Q: Does continuity exist?

YES : Go to Step 7.
NO : Go to Step 5.

STEP 5. Check harness connector C-121 at ECM for damage.

Q: Is the harness connector in good condition?

YES : Go to Step 6.
NO : Repair or replace it. Refer to GROUP 00E, Harness Connector Inspection P.00E-2. Then go to Step 9.

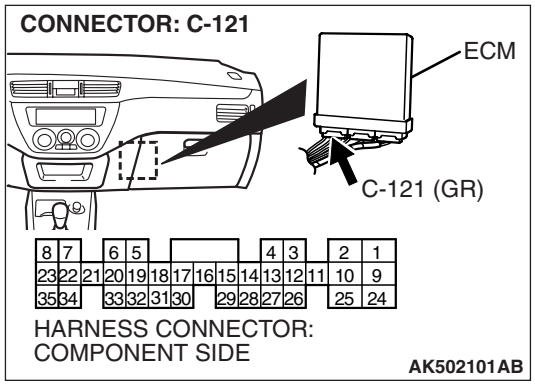

STEP 6. Check for open circuit and harness damage between intake air temperature sensor connector B-105 (terminal No. 5) and ECM connector C-121 (terminal No. 34).

Q: Is the harness wire in good condition?

YES : Replace the ECM. Then go to Step 9.

NO : Repair it. Then go to Step 9.

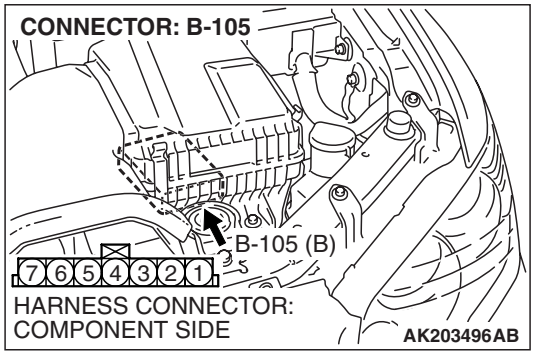

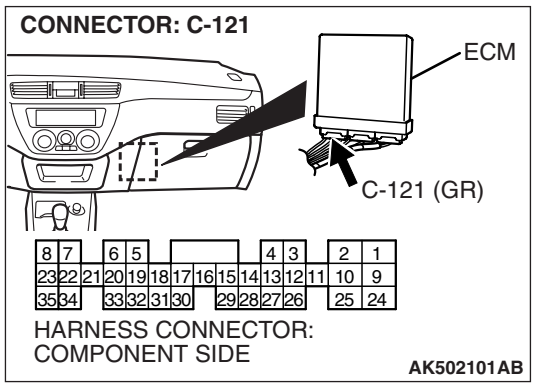

STEP 7. Check harness connector C-119 at ECM for damage.

Q: Is the harness connector in good condition?

YES : Go to Step 8.

NO : Repair or replace it. Refer to GROUP 00E, Harness Connector Inspection P.00E-2. Then go to Step 9

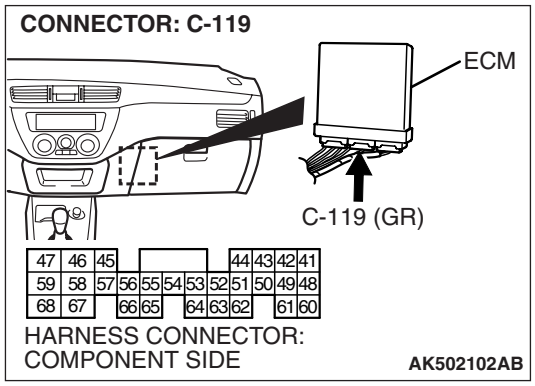

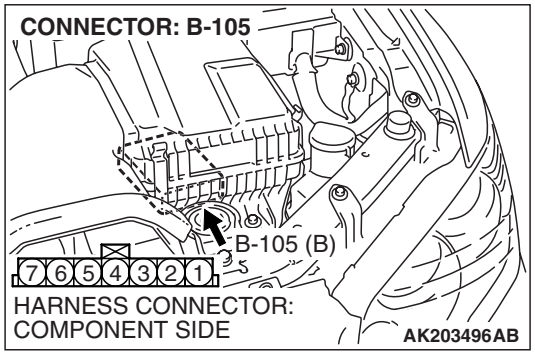

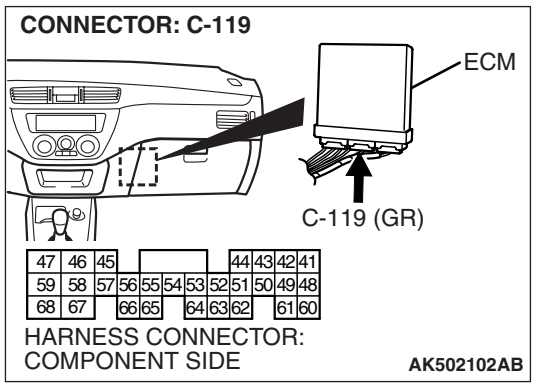

STEP 8. Check for open circuit and harness damage between intake air temperature sensor connector B-105 (terminal No. 6) and ECM connector C-119 (terminal No. 62).

Q: Is the harness wire in good condition?

YES : Replace the ECM. Then go to Step 9.
NO : Repair it. Then go to Step 9.

STEP 9. Test the OBD-II drive cycle.

(1) Carry out a test drive with the drive cycle pattern. Refer to GROUP 13A, Diagnostic Function –OBD-II Drive Cycle – Pattern 8 P.13A-12.
(2) Check the diagnostic trouble code (DTC).

Q: Is DTC P0111 set?

YES : Retry the troubleshooting.
NO : The inspection is complete.

DTC P0112: Intake Air Temperature Circuit Low Input

Intake Air Temperature Sensor Circuit

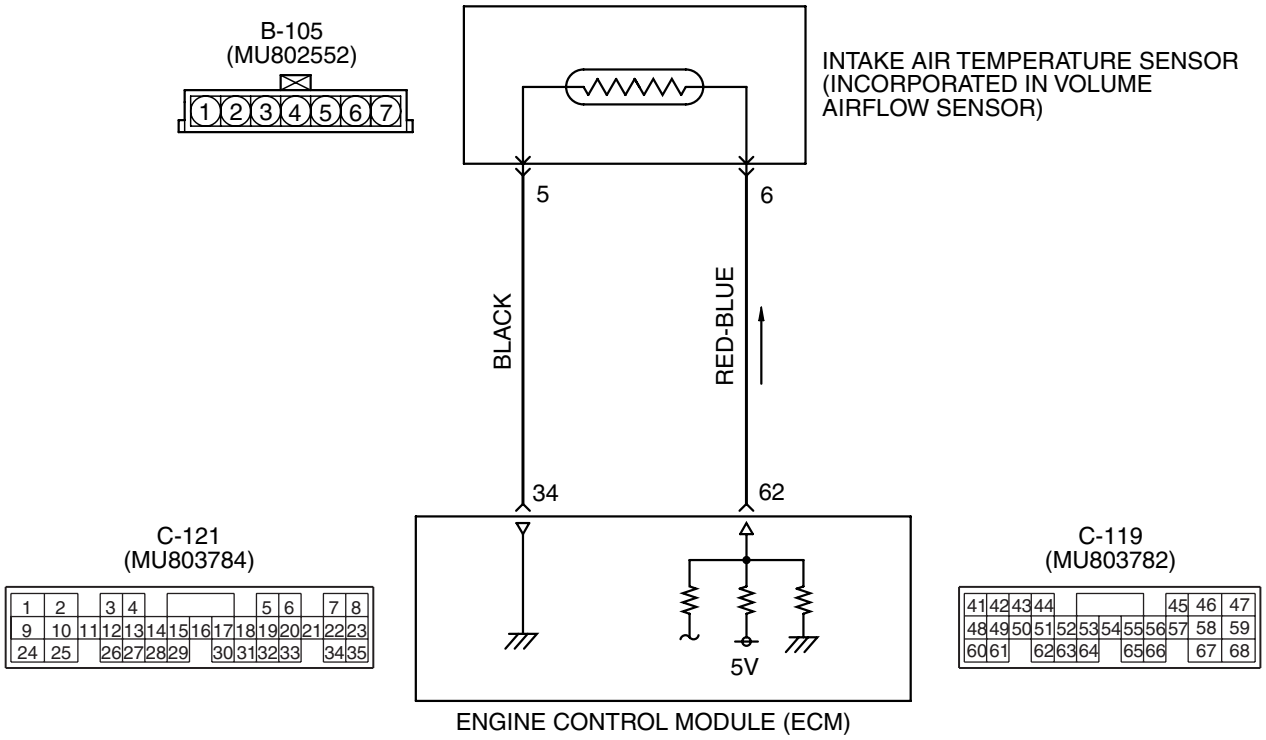

AK502063

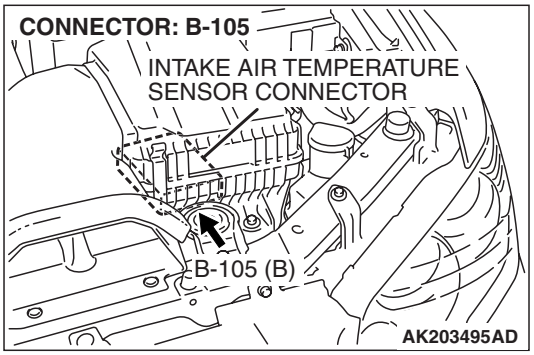

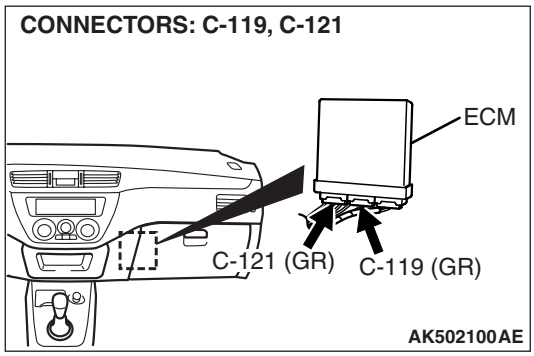

CIRCUIT OPERATION

- Approximately 5 volts are applied to the intake air temperature sensor output terminal (terminal No. 6) from the ECM (terminal No. 62) via the resistor in the ECM. The ground terminal (terminal No. 5) is grounded with ECM (terminal No. 34).
- The intake air temperature sensor is a negative temperature coefficient type of resistor. When the intake air temperature rises, the resistance decreases.
- The intake air temperature sensor output voltage increases when the resistance increases and decreases when the resistance decreases.

TECHNICAL DESCRIPTION

- The intake air temperature sensor converts the intake air temperature to a voltage.
- The ECM checks whether this voltage is within a specified range.

DESCRIPTIONS OF MONITOR METHODS

- Intake air temperature sensor output voltage is out of specified range.

MONITOR EXECUTION

- Continuous

MONITOR EXECUTION CONDITIONS (Other monitor and Sensor)

Other Monitor (There is no temporary DTC stored in memory for the item monitored below)

- Not applicable

Sensor (The sensor below is determined to be normal)

- Not applicable

DTC SET CONDITIONS

Logic Flow Chart

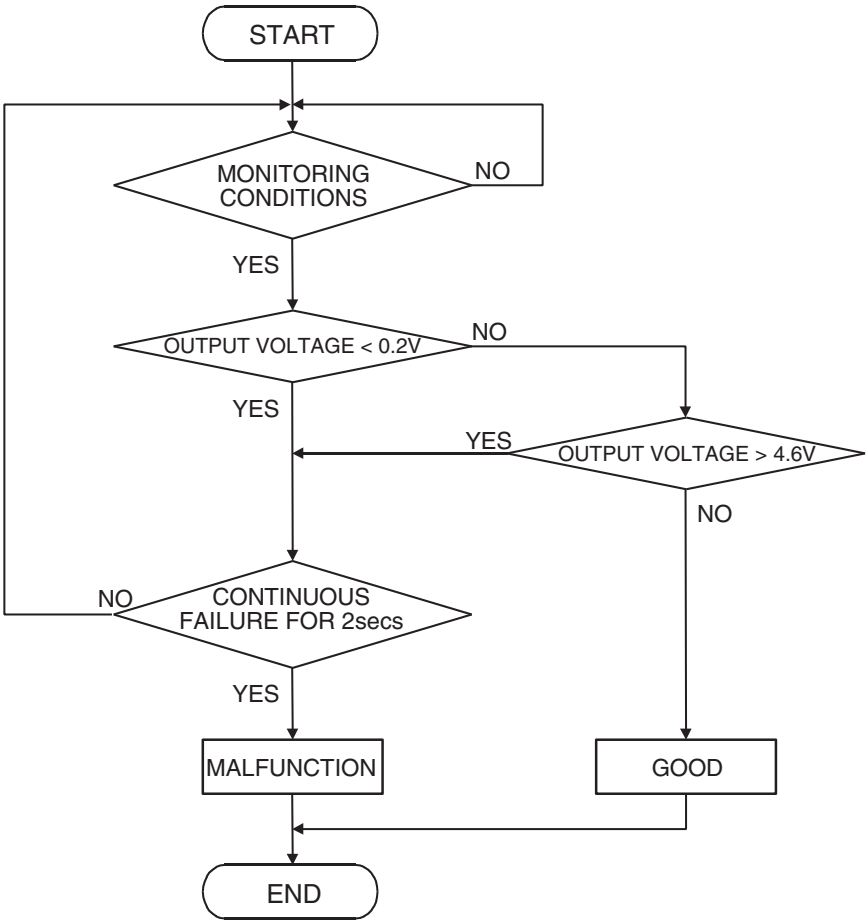

AK301424

Check Condition

- 2 seconds or more have passed since the engine staring sequence was completed.

Judgement Criterion

- Intake air temperature sensor output voltage has continued to be 0.2 volt or lower [corresponding to an air intake temperature of 115° C (239° F) or higher] for 2 seconds.

OBD-II DRIVE CYCLE PATTERN

Refer to Diagnostic Function –OBD-II Drive Cycle – Pattern 23 P.13A-12.

TROUBLESHOOTING HINTS (The most likely causes for this code to be set are:)

- Intake air temperature sensor failed.
- Shorted intake air temperature sensor circuit, or connector damage.
- ECM failed.

TSB Revision

DIAGNOSIS

Required Special Tools:

- MB991958: Scan Tool (M.U.T.-III Sub Assembly)
  - MB991824: V.C.I.
  - MB991827: USB Cable
  - MB991911: Main Harness B

STEP 1. Using scan tool MB991958, check data list item 13: Intake Air Temperature Sensor.

⚠ CAUTION

To prevent damage to scan tool MB991958, always turn the ignition switch to the "LOCK" (OFF) position before connecting or disconnecting scan tool MB991958.

(1) Connect scan tool MB991958 to the data link connector.
(2) Turn the ignition switch to the "ON" position.
(3) Set scan tool MB991958 to the data reading mode for item 13, Intake Air Temperature Sensor.
  - The intake air temperature and temperature shown with the scan tool should approximately match.

(4) Turn the ignition switch to the "LOCK" (OFF) position.

Q: Is the sensor operating properly?

YES : It can be assumed that this malfunction is intermittent. Refer to GROUP 00, How to Use Troubleshooting/Inspection Service Points –How to Cope with Intermittent Malfunctions P.00-13.

NO : Go to Step 2.

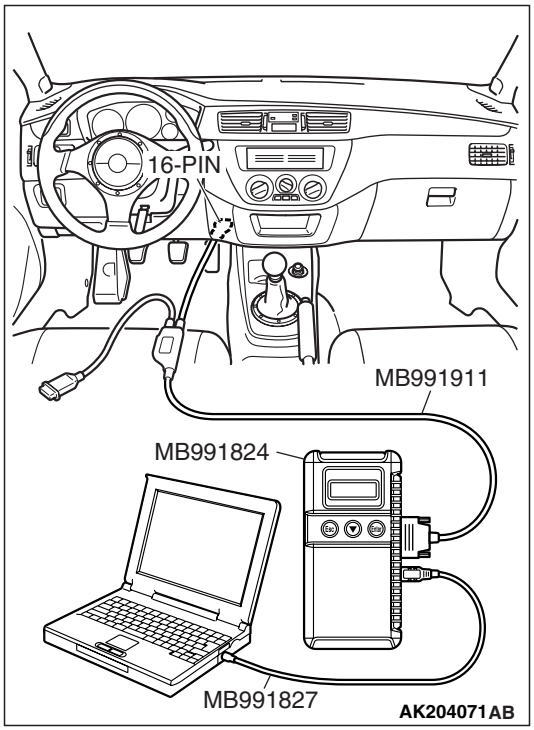

STEP 2. Check harness connector B-105 at the intake air temperature sensor for damage.

Q: Is the harness connector in good condition?

YES : Go to Step 3.

NO : Repair or replace it. Refer to GROUP 00E, Harness Connector Inspection P.00E-2. Then go to Step 6.

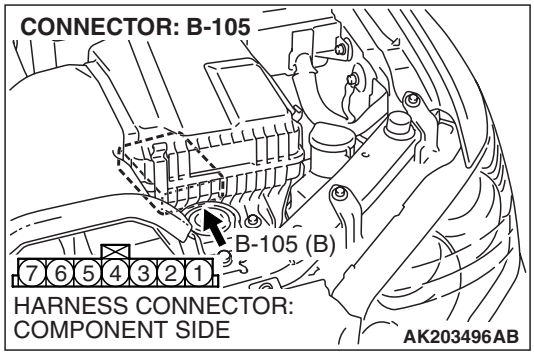

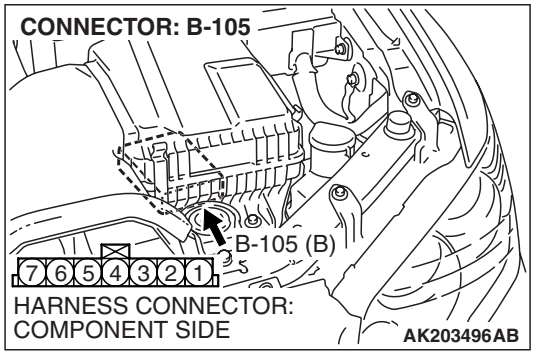

STEP 3. Check the intake air temperature sensor.

(1) Disconnect the intake air temperature sensor connector B-105.

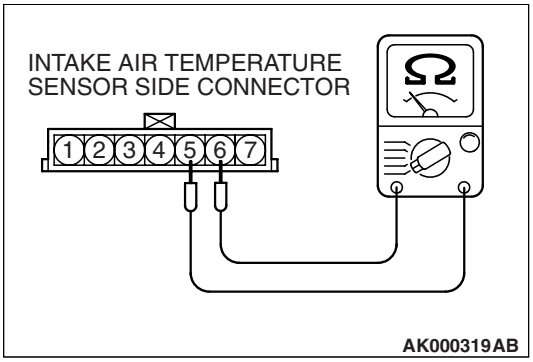

(2) Measure the resistance between intake air temperature sensor side connector terminal No. 5 and No. 6.
- There should be continuity. (0.30 – 1.0 kΩ)

Q: Is the measured resistance between 0.30 and 1.0 kΩ?

YES : Go to Step 4.

NO : Replace the volume airflow sensor. Then go to Step 6.

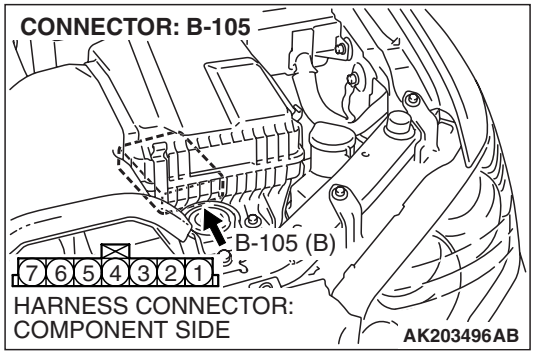

STEP 4. Check for short circuit to ground between intake air temperature sensor connector B-105 (terminal No. 6) and ECM connector C-119 (terminal No. 62).

Q: Is the harness wire in good condition?

YES : Go to Step 5.

NO : Repair it. Then go to Step 6.

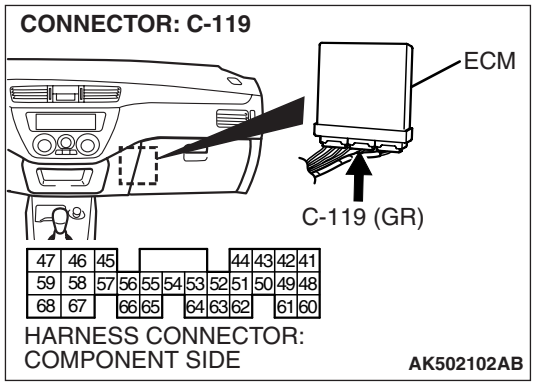

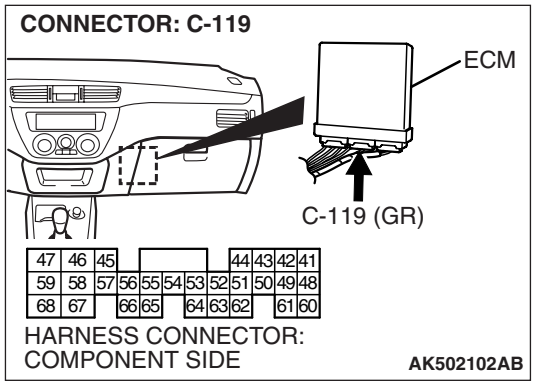

STEP 5. Check harness connector C-119 at ECM for damage.

Q: Is the harness connector in good condition?

YES : Replace the ECM. Then go to Step 6.

NO : Repair or replace it. Refer to GROUP 00E, Harness Connector Inspection P.00E-2. Then go to Step 6.

STEP 6. Test the OBD-II drive cycle.

(1) Carry out a test drive with the drive cycle pattern. Refer to GROUP 13A, Diagnostic Function –OBD-II Drive Cycle – Pattern 23 P.13A-12.

(2) Check the diagnostic trouble code (DTC).

Q: Is DTC P0112 set?

YES : Retry the troubleshooting.

NO : The inspection is complete.

DTC P0113: Intake Air Temperature Circuit High Input

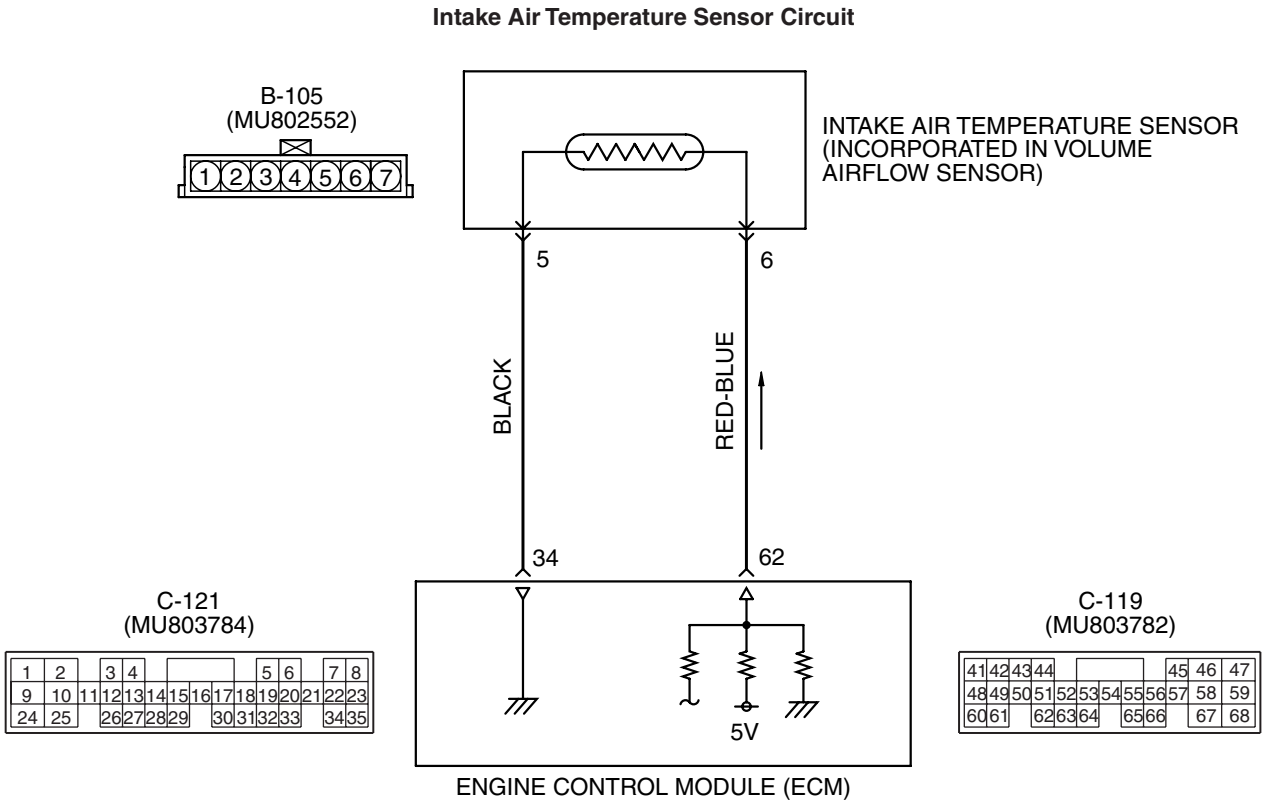

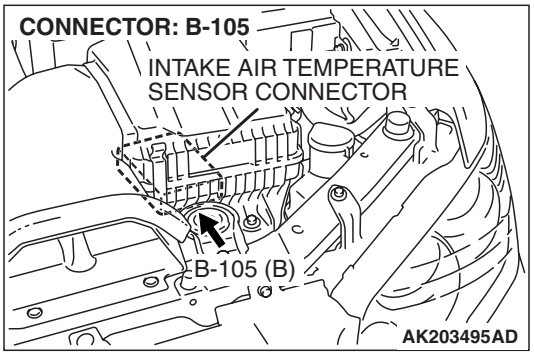

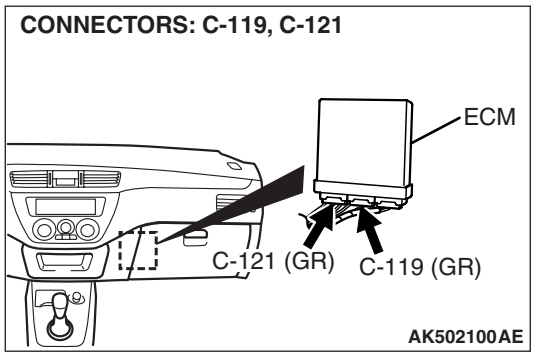

CIRCUIT OPERATION

- Approximately 5 volts are applied to the intake air temperature sensor output terminal (terminal No. 6) from the ECM (terminal No. 62) via the resistor in the ECM. The ground terminal (terminal No. 5) is grounded with ECM (terminal No. 34).
- The intake air temperature sensor is a negative temperature coefficient type of resistor. When the intake air temperature rises, the resistance decreases.
- The intake air temperature sensor output voltage increases when the resistance increases and decreases when the resistance decreases.

TECHNICAL DESCRIPTION

- The intake air temperature sensor converts the intake air temperature to a voltage.
- The ECM checks whether this voltage is within a specified range.

DESCRIPTIONS OF MONITOR METHODS

- Intake air temperature sensor output voltage is out of specified range.

MONITOR EXECUTION

- Continuous

MONITOR EXECUTION CONDITIONS (Other monitor and Sensor)

Other Monitor (There is no temporary DTC stored in memory for the item monitored below)

- Not applicable

Sensor (The sensor below is determined to be normal)

- Not applicable

DTC SET CONDITIONS

Logic Flow Chart

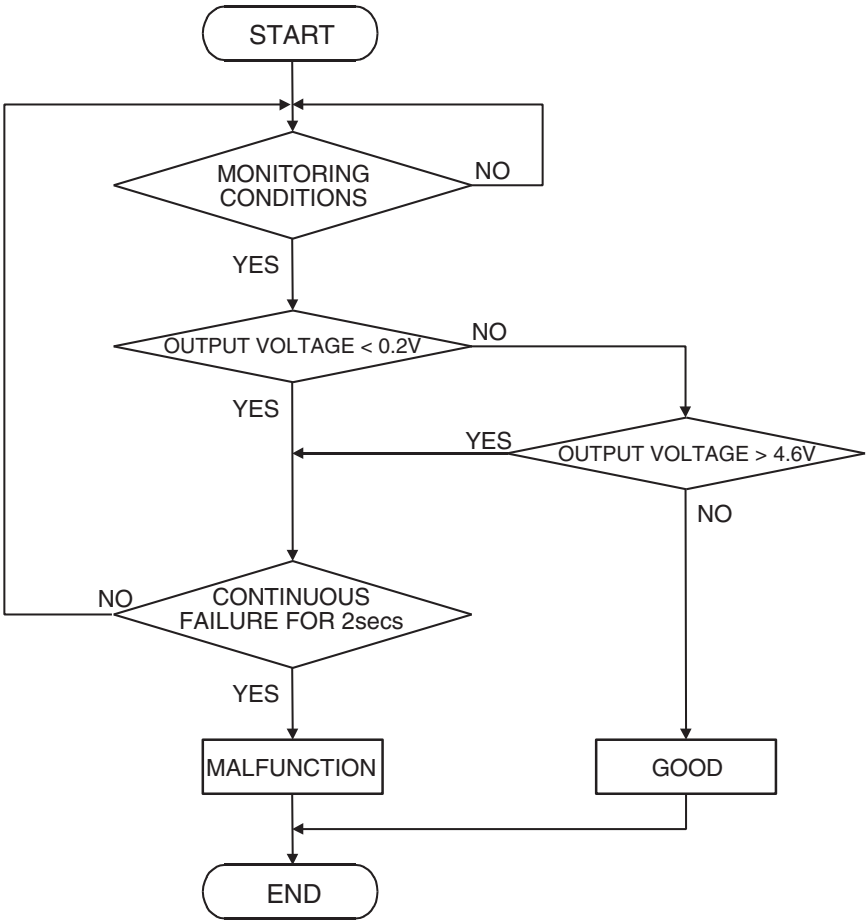

AK301424

Check Condition

- 2 seconds or more have passed since the engine staring sequence was completed.

Judgement Criterion

- Intake air temperature sensor output voltage has continued to be 4.6 volts or higher [corresponding to an air intake temperature of – 40° C (– 40° F) or lower] for 2 seconds.

OBD-II DRIVE CYCLE PATTERN

Refer to Diagnostic Function –OBD-II Drive Cycle – Pattern 23 P.13A-12.

TROUBLESHOOTING HINTS (The most likely causes for this code to be set are:)

- Intake air temperature sensor failed.
- Open intake air temperature sensor circuit, or connector damage.
- ECM failed.

TSB Revision

DIAGNOSIS

Required Special Tools:

- MB991958: Scan Tool (M.U.T.-III Sub Assembly)
  - MB991824: V.C.I.
  - MB991827: USB Cable
  - MB991911: Main Harness B

STEP 1. Using scan tool MB991958, check data list item 13: Intake Air Temperature Sensor.

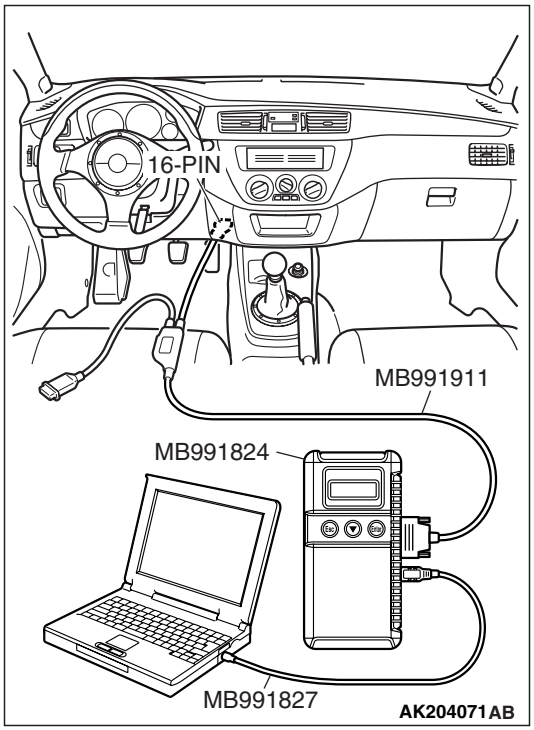

⚠ CAUTION

To prevent damage to scan tool MB991958, always turn the ignition switch to the "LOCK" (OFF) position before connecting or disconnecting scan tool MB991958.

(1) Connect scan tool MB991958 to the data link connector.
(2) Turn the ignition switch to the "ON" position.
(3) Set scan tool MB991958 to the data reading mode for item 13, Intake Air Temperature Sensor.
  - The intake air temperature and temperature shown with the scan tool should approximately match.

(4) Turn the ignition switch to the "LOCK" (OFF) position.

Q: Is the sensor operating properly?

YES : It can be assumed that this malfunction is intermittent. Refer to GROUP 00, How to Use Troubleshooting/Inspection Service Points –How to Cope with Intermittent Malfunctions P.00-13.

NO : Go to Step 2.

STEP 2. Check harness connector B-105 at the intake air temperature sensor for damage.

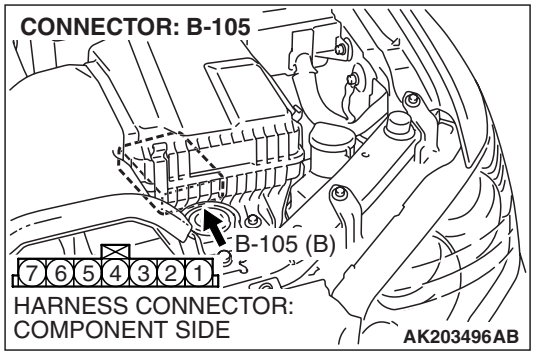

Q: Is the harness connector in good condition?

YES : Go to Step 3.

NO : Repair or replace it. Refer to GROUP 00E, Harness Connector Inspection P.00E-2. Then go to Step 11.

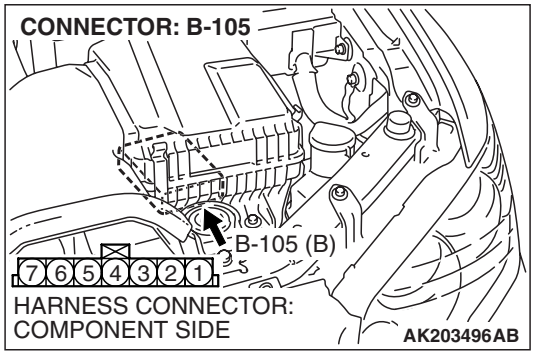

STEP 3. Check the intake air temperature sensor.

(1) Disconnect the intake air temperature sensor connector B-105.

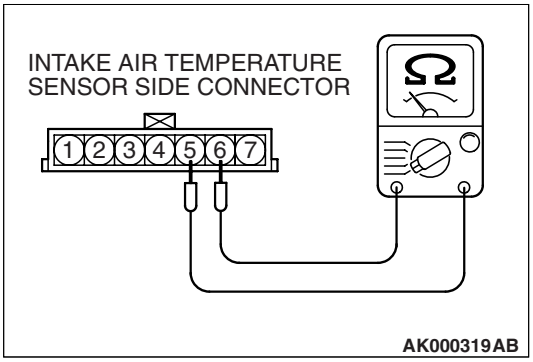

(2) Measure the resistance between intake air temperature sensor side connector terminal No. 5 and No. 6.
- There should be continuity. (0.30 – 1.0 kΩ)

Q: Is the measured resistance between 0.3 and 1.0 kΩ?

YES : Go to Step 4.

NO : Replace the volume airflow sensor. Then go to Step 11.

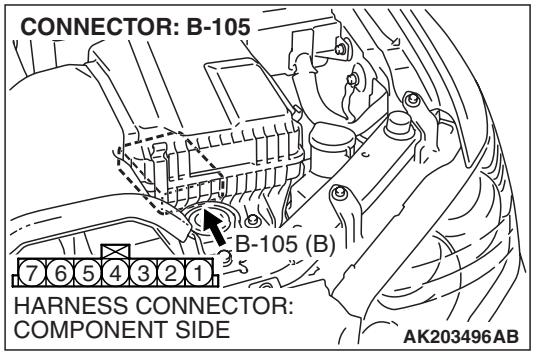

STEP 4. Measure the sensor supply voltage at intake air temperature sensor harness side connector B-105.

(1) Disconnect connector B-105 and measure at the harness side.

(2) Turn the ignition switch to the "ON" position.

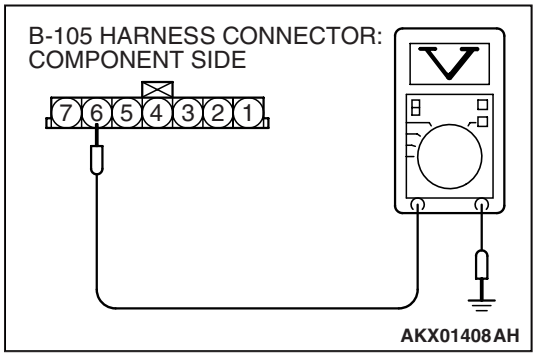

(3) Measure the voltage between terminal No. 6 and ground.
- Voltage should be between 4.5 and 4.9 volts.

(4) Turn the ignition switch to the "LOCK" (OFF) position.

Q: Is the measured voltage between 4.5 and 4.9 volts?

YES : Go to Step 8.

NO : Go to Step 5.

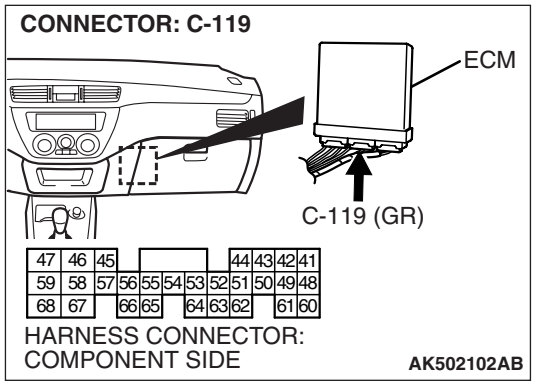

STEP 5. Measure the sensor supply voltage at ECM connector C-119 by backprobing.

(1) Do not disconnect the ECM connector C-119.
(2) Disconnect the intake air temperature sensor connector B-105.
(3) Turn the ignition switch to the "ON" position.

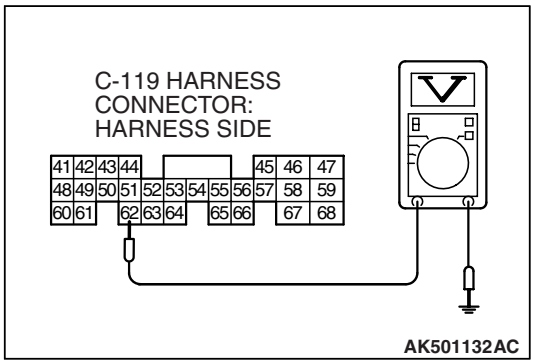

(4) Measure the voltage between terminal No. 62 and ground by backprobing.
- Voltage should be between 4.5 and 4.9 volts.

(5) Turn the ignition switch to the "LOCK" (OFF) position.

Q: Is the measured voltage between 4.5 and 4.9 volts?

YES : Go to Step 6.
NO : Go to Step 7.

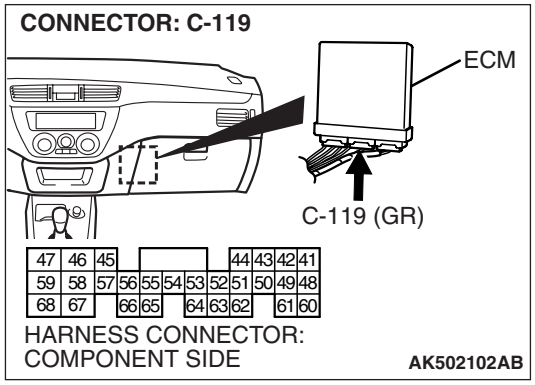

STEP 6. Check harness connector C-119 at ECM for damage.

Q: Is the harness connector in good condition?

YES : Repair harness wire between intake air temperature sensor connector B-105 and ECM connector C-119 because of open circuit. Then go to Step 11.
NO : Repair or replace it. Refer to GROUP 00E, Harness Connector Inspection P.00E-2. Then go to Step 11.

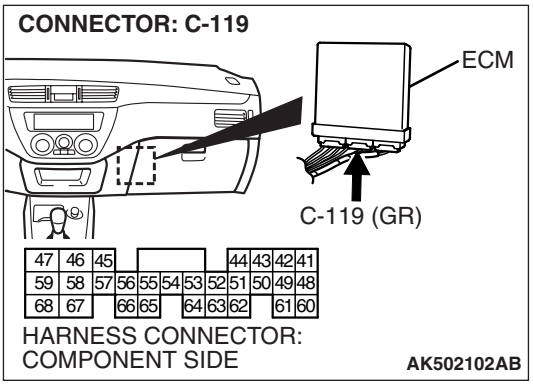

STEP 7. Check harness connector C-119 at ECM for damage.

Q: Is the harness connector in good condition?

YES : Replace the ECM. Then go to Step 11.

NO : Repair or replace it. Refer to GROUP 00E, Harness Connector Inspection P.00E-2. Then go to Step 11.

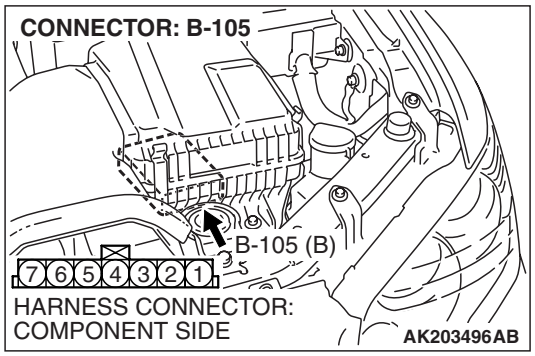

STEP 8. Check for continuity at intake air temperature sensor harness side connector B-105.

(1) Disconnect connector B-105 and measure at the harness side.

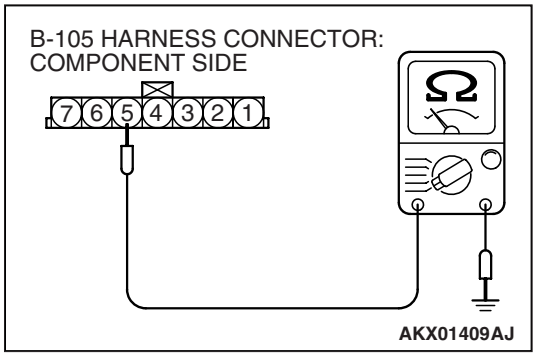

(2) Check for the continuity between terminal No. 5 and ground.
- Should be less than 2 ohms.

Q: Does continuity exist?

YES : Replace the ECM. Then go to Step 11.

NO : Go to Step 9.

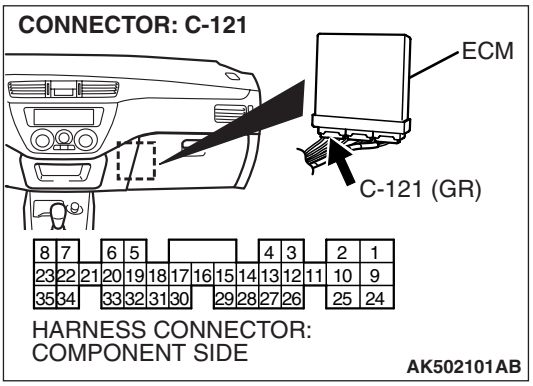

STEP 9. Check harness connector C-121 at ECM for damage.

Q: Is the harness connector in good condition?

YES : Go to Step 10.

NO : Repair or replace it. Refer to GROUP 00E, Harness Connector Inspection P.00E-2. Then go to Step 11.

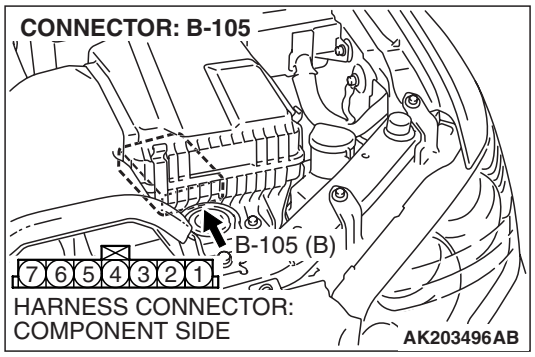

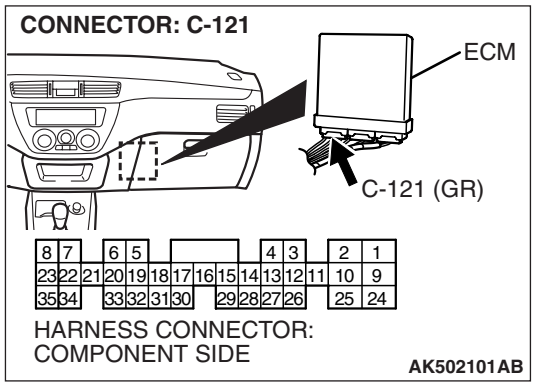

STEP 10. Check for open circuit between intake air temperature sensor connector B-105 (terminal No. 5) and ECM connector C-121 (terminal No. 34).

Q: Is the harness wire in good condition?

YES : Replace the ECM. Then go to Step 11.

NO : Repair it. Then go to Step 11.

STEP 11. Test the OBD-II drive cycle.

(1) Carry out a test drive with the drive cycle pattern. Refer to GROUP 13A, Diagnostic Function –OBD-II Drive Cycle – Pattern 23 P.13A-12.

(2) Check the diagnostic trouble code (DTC).

Q: Is DTC P0113 set?

YES : Retry the troubleshooting.

NO : The inspection is complete.

DTC P0116: Engine Coolant Temperature Circuit Range/Performance Problem

Enging Coolant Temperature Sensor Circuit

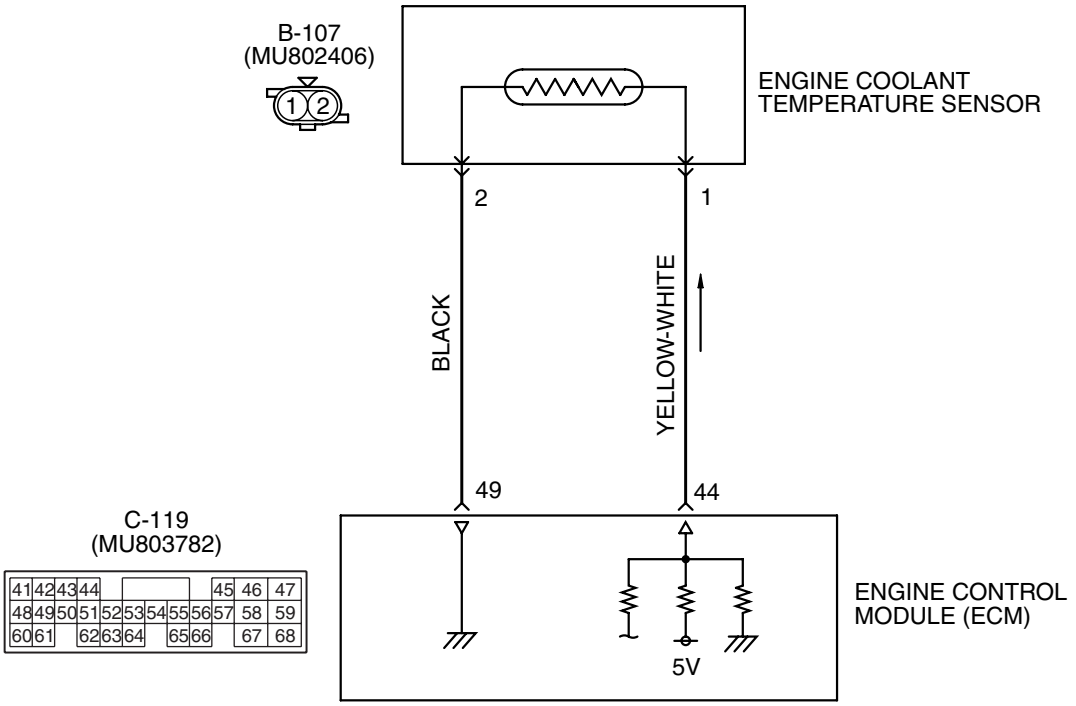

AK502064

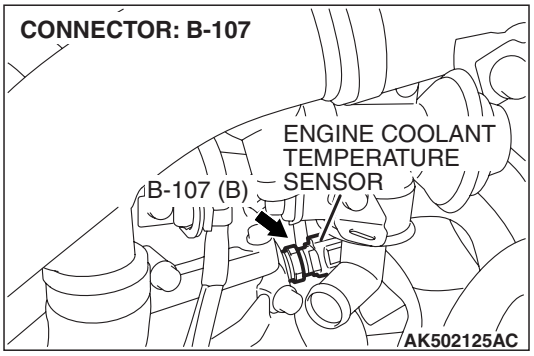

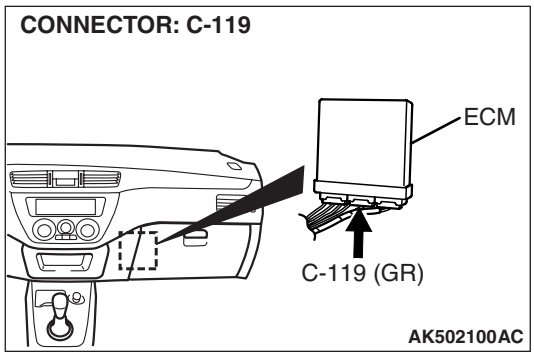

CIRCUIT OPERATION

- 5-volt voltage is applied to the engine coolant temperature sensor output terminal (terminal No. 1) from the ECM (terminal No. 44) via the resistor in the ECM. The ground terminal (terminal No. 2) is grounded with ECM (terminal No. 49).
- The engine coolant temperature sensor is a negative temperature coefficient type of resistor. It has the characteristic that when the engine coolant temperature rises the resistance decreases.
- The engine coolant temperature sensor output voltage increases when the resistance increases and decreases when the resistance decreases.

TECHNICAL DESCRIPTION

- The engine coolant temperature sensor converts the engine coolant temperature to a voltage and outputs it.
- The ECM checks whether this voltage is within a specified range.

DESCRIPTIONS OF MONITOR METHODS

- Engine coolant temperature sensor output voltage does not change for specified period when engine coolant temperature sensor output voltage at engine start is over 7° C (45° F).

TSB Revision

MONITOR EXECUTION

- Once per driving cycle

MONITOR EXECUTION CONDITIONS (Other monitor and Sensor)

Other Monitor (There is no temporary DTC stored in memory for the item monitored below)

- Not applicable

Sensor (The sensor below is determined to be normal)

- Volume airflow sensor
- Engine coolant temperature sensor
- Intake air temperature sensor

DTC SET CONDITIONS

Logic Flow Chart

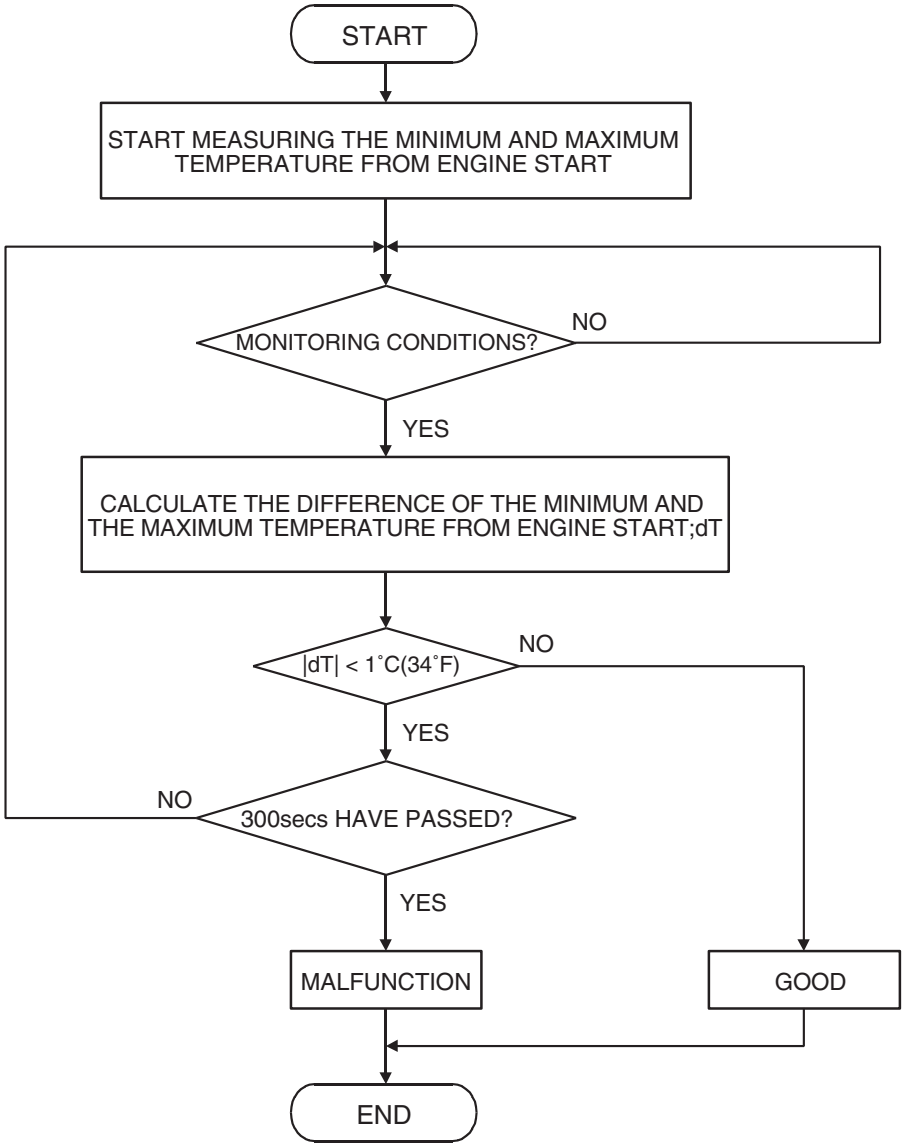

AK305537

Check Condition

- Engine coolant temperature was 7° C (45° F) or more when the engine started.

Judgement Criteria

- Engine coolant temperature fluctuates within 1° C (34° F) after 5 minutes have passed since the engine was started.
- However, time is not counted if any of the following conditions are met.
  1. Intake air temperature is 60° C (140° F) or more.
  2. Volume airflow sensor output frequency is 70 Hz or less.
  3. During fuel shut-off operation.
- The ECM monitors for this condition once during the drive cycle.

OBD-II DRIVE CYCLE PATTERN

Refer to Diagnostic Function–OBD-II Drive Cycle–Pattern 9 P.13A-12.

TROUBLESHOOTING HINTS (The most likely causes for this code to be set are:)

- Engine coolant temperature sensor failed.
- Harness damage or connector damage.
- ECM failed.

DIAGNOSIS

Required Special Tools:

- MB991958: Scan Tool (M.U.T.-III Sub Assembly)
  - MB991824: V.C.I.
  - MB991827: USB Cable
  - MB991911: Main Harness B

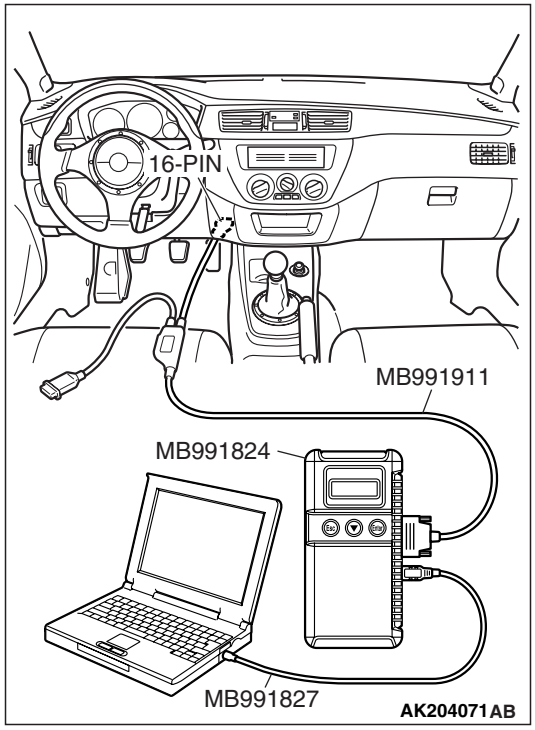

STEP 1. Using scan tool MB991958, check data list item 21: Engine Coolant Temperature Sensor.

⚠ CAUTION

To prevent damage to scan tool MB991958, always turn the ignition switch to the "LOCK" (OFF) position before connecting or disconnecting scan tool MB991958.

(1) Connect scan tool MB991958 to the data link connector.
(2) Turn the ignition switch to the "ON" position.
(3) Set scan tool MB991958 to the data reading mode for item 21, Engine Coolant Temperature Sensor.
  - The engine coolant temperature and temperature shown with the scan tool should approximately match.
(4) Turn the ignition switch to the "LOCK" (OFF) position.

Q: Is the sensor operating properly?

YES : It can be assumed that this malfunction is intermittent. Refer to GROUP 00, How to Use Troubleshooting/Inspection Service Points –How to Cope with Intermittent Malfunctions P.00-13.

NO : Go to Step 2.

STEP 2. Measure the sensor output voltage at engine coolant temperature sensor connector B-107 by backprobing.

(1) Do not disconnect connector B-107.
(2) Turn the ignition switch to the "ON" position.

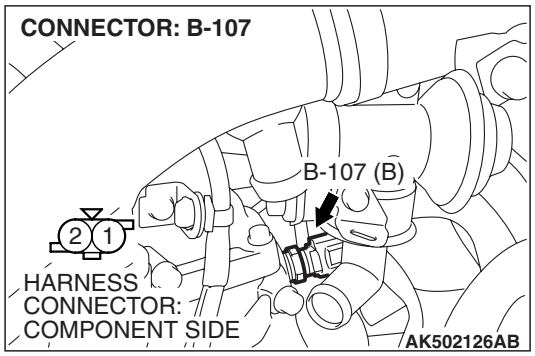

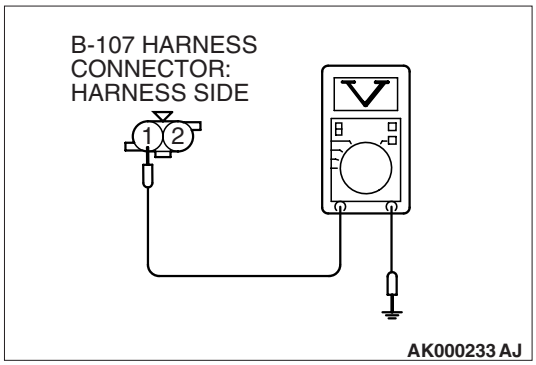

(3) Measure the voltage between terminal No. 1 and ground by backprobing.
- When engine coolant temperature is – 20° C (– 4° F), voltage should be between 3.9 and 4.5 volts.
- When engine coolant temperature is 0° C (32° F), voltage should be between 3.2 and 3.8 volts.
- When engine coolant temperature is 20° C (68° F), voltage should be between 2.3 and 2.9 volts.
- When engine coolant temperature is 40° C (104° F), voltage should be between 1.3 and 1.9 volts.
- When engine coolant temperature is 60° C (140° F), voltage should be between 0.7 and 1.3 volts.
- When engine coolant temperature is 80° C (176° F), voltage should be between 0.3 and 0.9 volt.

(4) Turn the ignition switch to the "LOCK" (OFF) position.

Q: Is the measured voltage within the specified range?

YES : Go to Step 3.
NO : Go to Step 5.

STEP 3. Check harness connector B-107 at the engine coolant temperature sensor for damage.

Q: Is the harness connector in good condition?

YES : Go to Step 4.
NO : Repair or replace it. Refer to GROUP 00E, Harness Connector Inspection P.00E-2. Then go to Step 14.

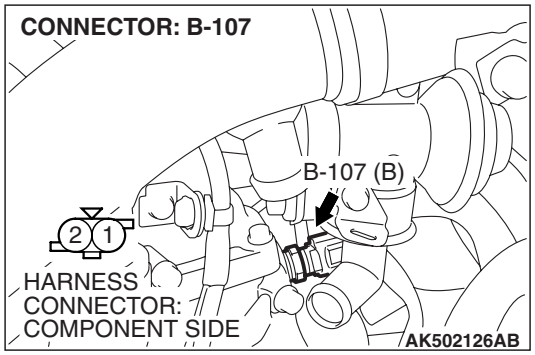

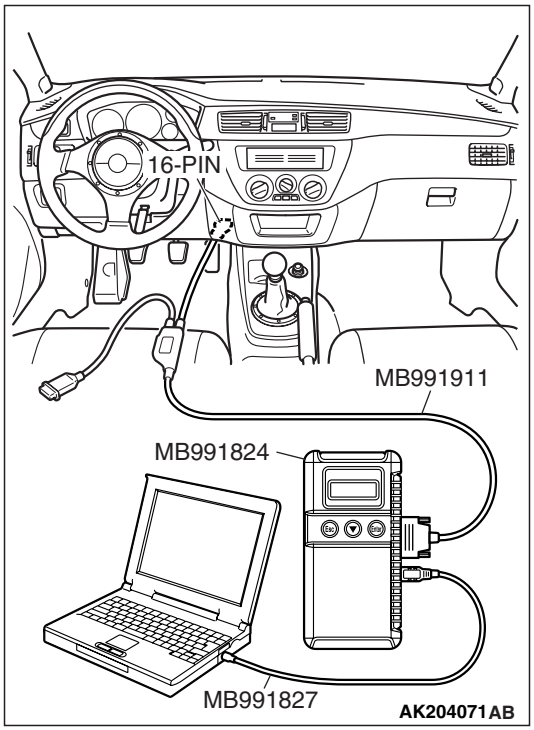

STEP 4. Using scan tool MB991958, check data list item 21: Engine Coolant Temperature Sensor.

⚠ CAUTION

To prevent damage to scan tool MB991958, always turn the ignition switch to the "LOCK" (OFF) position before connecting or disconnecting scan tool MB991958.

(1) Connect scan tool MB991958 to the data link connector.
(2) Turn the ignition switch to the "ON" position.
(3) Set scan tool MB991958 to the data reading mode for item 21, Engine Coolant Temperature Sensor.
- The engine coolant temperature and temperature shown with the scan tool should approximately match.

(4) Turn the ignition switch to the "LOCK" (OFF) position.

Q: Is the sensor operating properly?

YES : It can be assumed that this malfunction is intermittent. Refer to GROUP 00, How to Use Troubleshooting/Inspection Service Points –How to Cope with Intermittent Malfunctions P.00-13.

NO : Replace the ECM. Then go to Step 14.

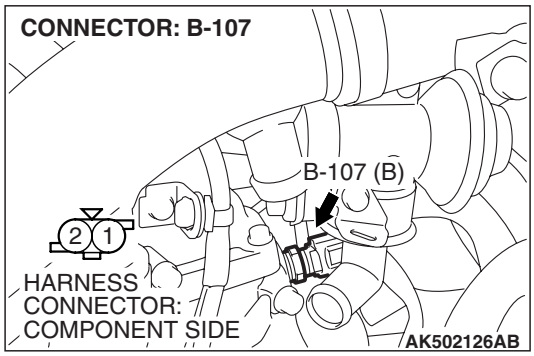

STEP 5. Check harness connector B-107 at engine coolant temperature sensor for damage.

Q: Is the harness connector in good condition?

YES : Go to Step 6.

NO : Repair or replace it. Refer to GROUP 00E, Harness Connector Inspection P.00E-2. Then go to Step 14.

STEP 6. Measure the sensor supply voltage at engine coolant temperature sensor harness side connector B-107.

(1) Disconnect connector B-107 and measure at the harness side.

(2) Turn the ignition switch to the "ON" position.

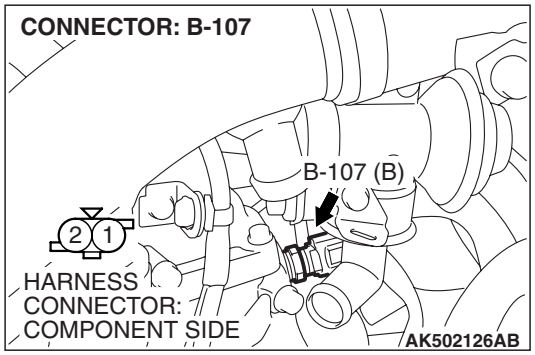

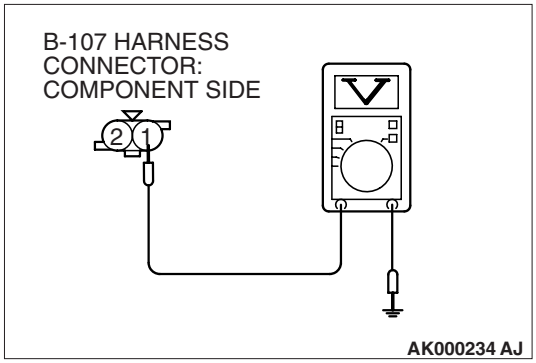

(3) Measure the voltage between terminal No. 1 and ground.
- Voltage should be between 4.5 and 4.9 volts.

(4) Turn the ignition switch to the "LOCK" (OFF) position.

Q: Is the measured voltage between 4.5 and 4.9 volts?

YES : Go to Step 8.
NO : Go to Step 7.

STEP 7. Check harness connector C-119 at ECM for damage.

Q: Is the harness connector in good condition?

YES : Replace the ECM. Then go to Step 14.
NO : Repair or replace it. Refer to GROUP 00E, Harness Connector Inspection P.00E-2. Then go to Step 14.

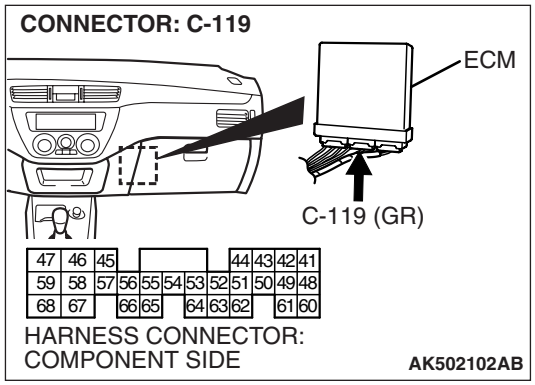

STEP 8. Check for continuity at engine coolant temperature sensor harness side connector B-107.

(1) Disconnect connector B-107 and measure at the harness side.

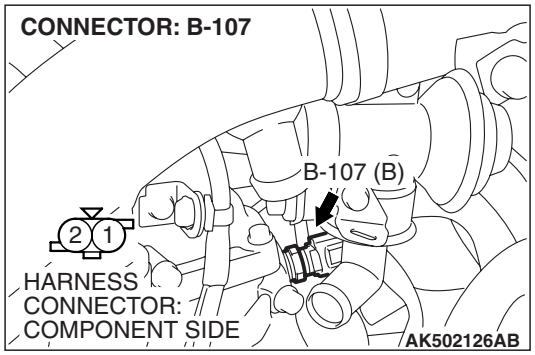

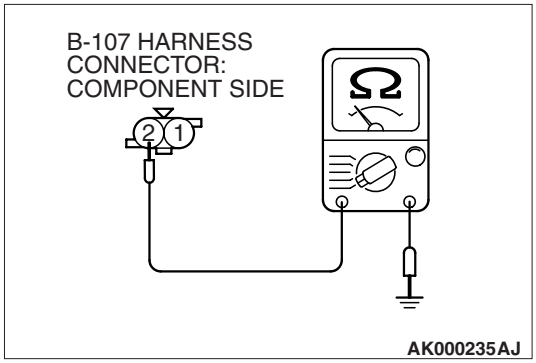

(2) Check for the continuity between terminal No. 2 and ground.
- Should be less than 2 ohms.

Q: Does continuity exist?

YES : Go to Step 11.
NO : Go to Step 9.

STEP 9. Check harness connector C-119 at ECM for damage.

Q: Is the harness connector in good condition?

YES : Go to Step 10.
NO : Repair or replace it. Refer to GROUP 00E, Harness Connector Inspection P.00E-2. Then go to Step 14.

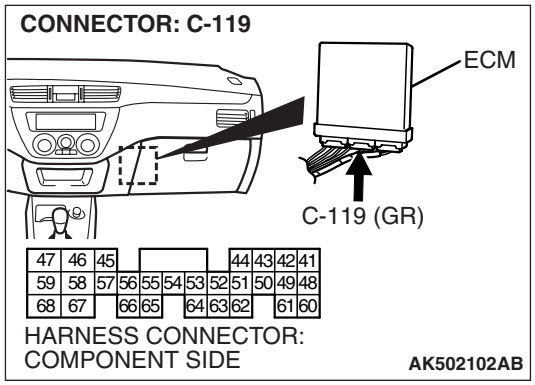

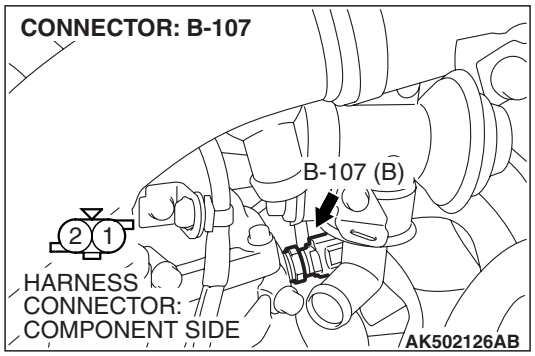

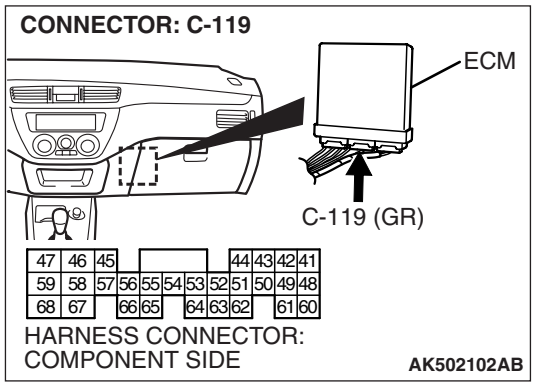

STEP 10. Check for harness damage between engine coolant temperature sensor connector B-107 (terminal No. 2) and ECM connector C-119 (terminal No. 49).

Q: Is the harness wire in good condition?

YES : Replace the ECM. Then go to Step 14.

NO : Repair it. Then go to Step 14.

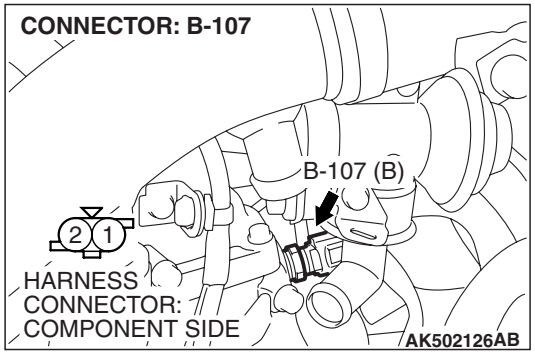

STEP 11. Check the engine coolant temperature sensor.

(1) Disconnect the engine coolant temperature sensor connector B-107.

(2) Remove the engine coolant temperature sensor.

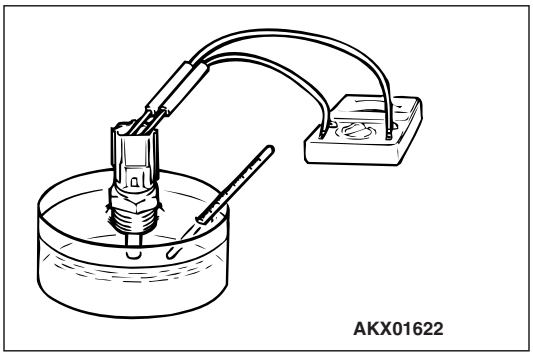

(3) With the temperature sensing portion of engine coolant temperature sensor immersed in hot water, check resistance.

Standard value:
14 – 17 kΩ [at – 20° C (– 4° F)]
5.1 – 6.5 kΩ [at 0° C (32° F)]
2.1 – 2.7 kΩ [at 20° C (68° F)]
0.9 – 1.3 kΩ [at 40° C (104° F)]
0.48 – 0.68 kΩ [at 60° C (140° F)]
0.26 – 0.36 kΩ [at 80° C (176° F)]

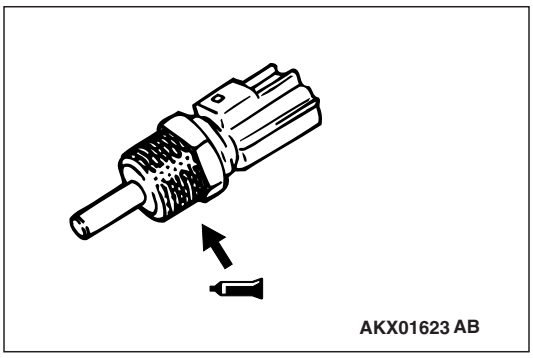

(4) Apply 3M™ AAD part number 8731 or equivalent on the screw section of the engine coolant temperature sensor.

(5) Install the engine coolant temperature sensor, and tighten to the specified torque.

Tightening torque: 29 ±10 N· m (22 ±6 ft-lb)

Q: Is the measured resistance at the standard value?

YES : Go to Step 12.

NO : Replace the engine coolant temperature sensor. Then go to Step 14.

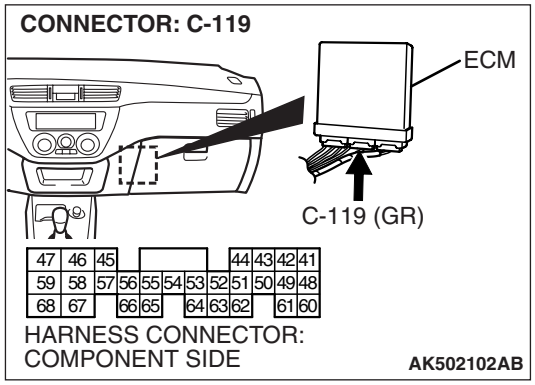

STEP 12. Check harness connector C-119 at ECM for damage.

Q: Is the harness connector in good condition?

YES : Go to Step 13.

NO : Repair or replace it. Refer to GROUP 00E, Harness Connector Inspection P.00E-2. Then go to Step 14.

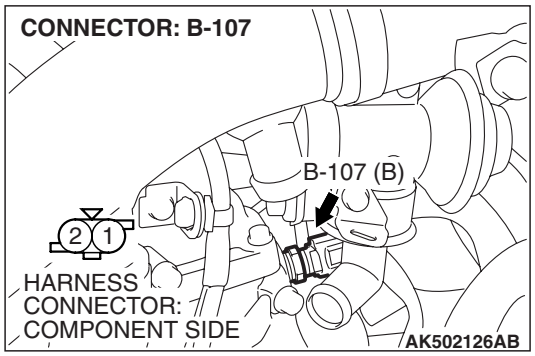

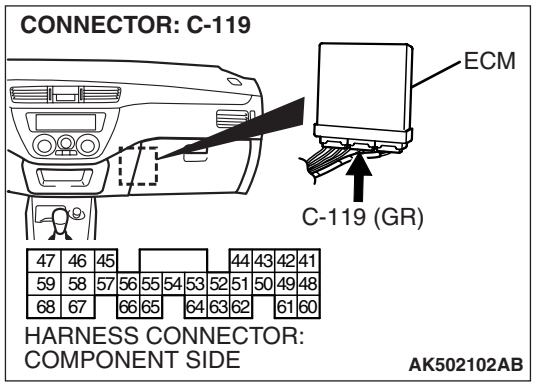

STEP 13. Check for harness damage between engine coolant temperature sensor connector B-107 (terminal No. 1) and ECM connector C-119 (terminal No. 44).

Q: Is the harness wire in good condition?

YES : Replace the ECM. Then go to Step 14.

NO : Repair it. Then go to Step 14.

STEP 14. Test the OBD-II drive cycle.

(1) Carry out a test drive with the drive cycle pattern. Refer to GROUP 13A, Diagnostic Function –OBD-II Drive Cycle – Pattern 9 P.13A-12.

(2) Check the diagnostic trouble code (DTC).

Q: Is DTC P0116 set?

YES : Retry the troubleshooting.

NO : The inspection is complete.

DTC P0117: Engine Coolant Temperature Circuit Low Input

Enging Coolant Temperature Sensor Circuit

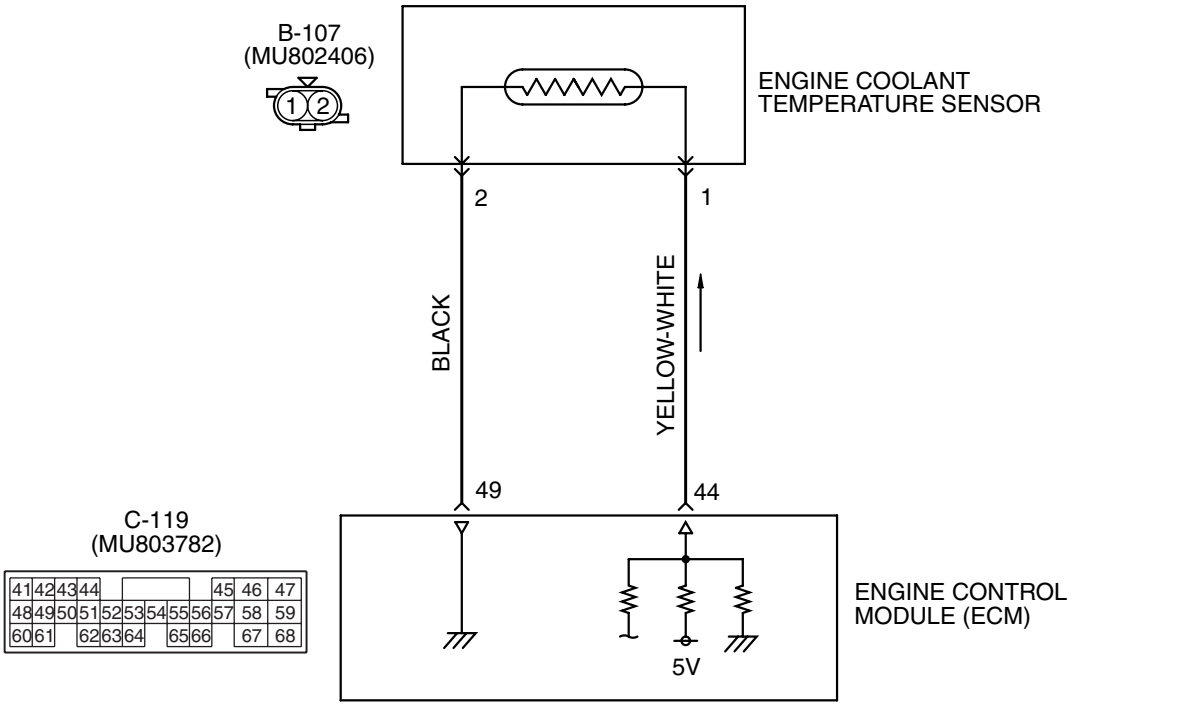

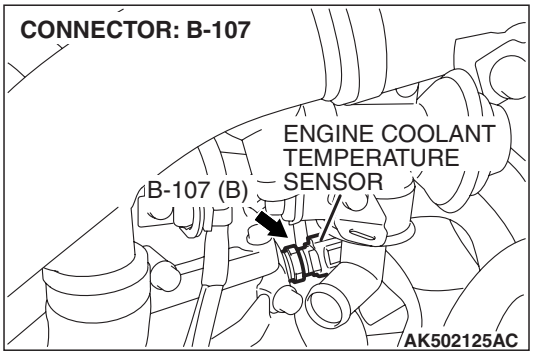

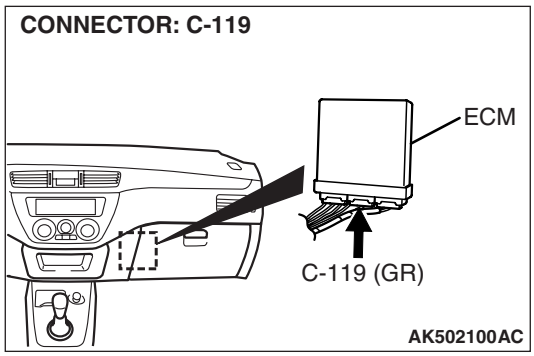

CIRCUIT OPERATION

- 5-volt voltage is applied to the engine coolant temperature sensor output terminal (terminal No. 1) from the ECM (terminal No. 44) via the resistor in the ECM. The ground terminal (terminal No. 2) is grounded with ECM (terminal No. 49).
- The engine coolant temperature sensor is a negative temperature coefficient type of resistor. It has the characteristic that when the engine coolant temperature rises the resistance decreases.
- The engine coolant temperature sensor output voltage increases when the resistance increases and decreases when the resistance decreases.

TECHNICAL DESCRIPTION

- The engine coolant temperature sensor converts the engine coolant temperature to a voltage and outputs it.
- The ECM checks whether this voltage is within a specified range.

DESCRIPTIONS OF MONITOR METHODS

- Engine coolant temperature sensor output voltage is out of specified range.

MONITOR EXECUTION

- Continuous

MONITOR EXECUTION CONDITIONS (Other monitor and Sensor)

Other Monitor (There is no temporary DTC stored in memory for the item monitored below)

- Not applicable

Sensor (The sensor below is determined to be normal)

- Not applicable

DTC SET CONDITIONS

Logic Flow Chart

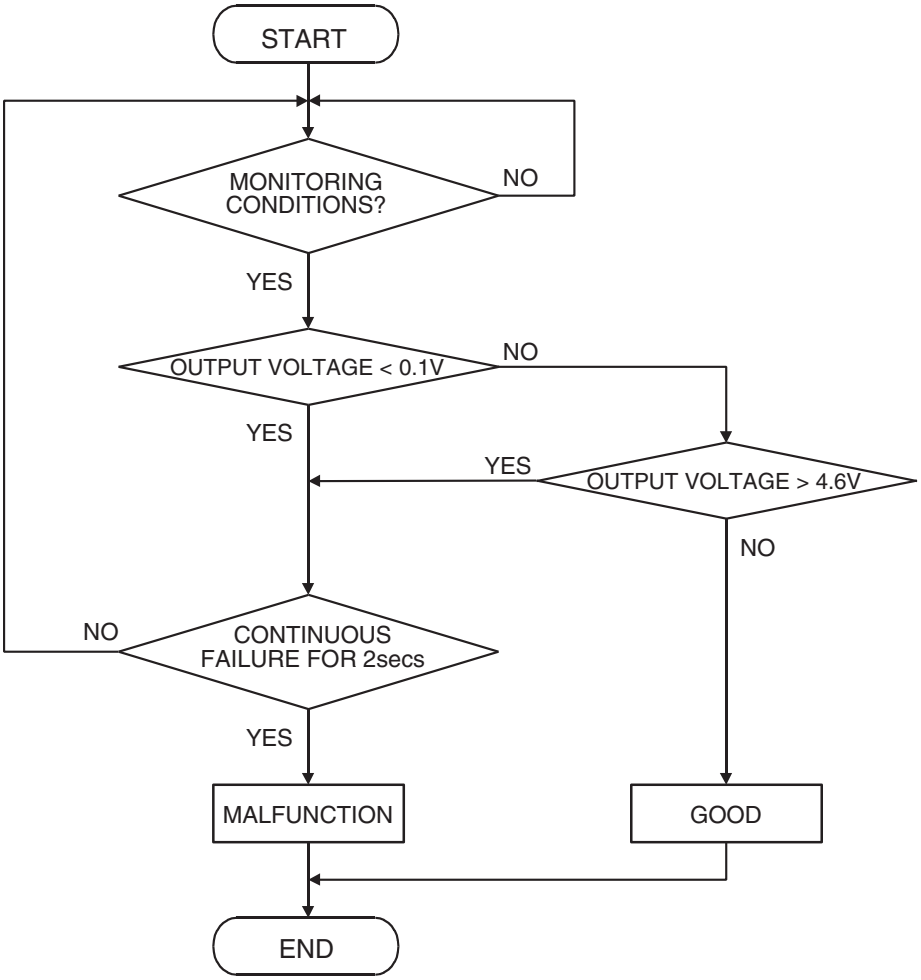

AK301426

Check Condition

- 2 seconds or more have passed since the engine staring sequence was completed.

Judgement Criterion

- Engine coolant temperature sensor output voltage has continued to be 0.1 volt or lower [corresponding to a coolant temperature of 140° C (284° F) or higher] for 2 seconds.

OBD-II DRIVE CYCLE PATTERN

Refer to Diagnostic Function –OBD-II Drive Cycle – Pattern 23 P.13A-12.

TROUBLESHOOTING HINTS (The most likely causes for this code to be set are:)

- Engine coolant temperature sensor failed.
- Open or shorted engine coolant temperature sensor circuit, or connector damage.
- ECM failed.

DIAGNOSIS

Required Special Tools:

- MB991958: Scan Tool (M.U.T.-III Sub Assembly)
  - MB991824: V.C.I.
  - MB991827: USB Cable
  - MB991911: Main Harness B

STEP 1. Using scan tool MB991958, check data list item 21: Engine Coolant Temperature Sensor.

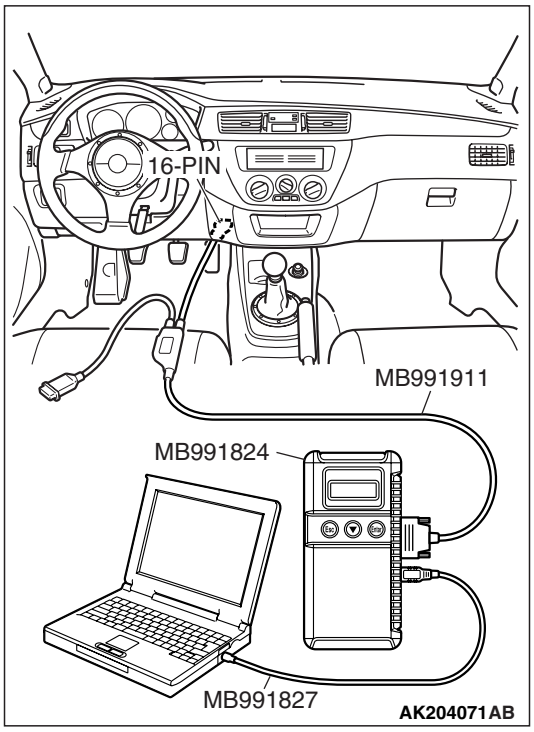

⚠ CAUTION

To prevent damage to scan tool MB991958, always turn the ignition switch to the "LOCK" (OFF) position before connecting or disconnecting scan tool MB991958.

(1) Connect scan tool MB991958 to the data link connector.
(2) Turn the ignition switch to the "ON" position.
(3) Set scan tool MB991958 to the data reading mode for item 21, Engine Coolant Temperature Sensor.
  - The engine coolant temperature and temperature shown with the scan tool should approximately match.

(4) Turn the ignition switch to the "LOCK" (OFF) position.

Q: Is the sensor operating properly?

YES : It can be assumed that this malfunction is intermittent. Refer to GROUP 00, How to Use Troubleshooting/Inspection Service Points –How to Cope with Intermittent Malfunctions P.00-13.

NO : Go to Step 2.

STEP 2. Check harness connector B-107 at the engine coolant temperature sensor for damage.

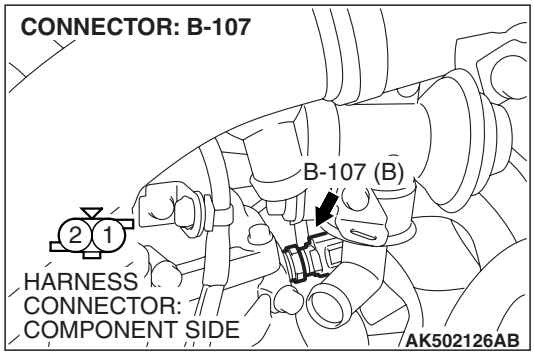

Q: Is the harness connector in good condition?

YES : Go to Step 3.

NO : Repair or replace it. Refer to GROUP 00E, Harness Connector Inspection P.00E-2. Then go to Step 6.

STEP 3. Check for short circuit to ground between engine coolant temperature sensor connector B-107 (terminal No. 1) and ECM connector C-119 (terminal No. 44).

Q: Is the harness wire in good condition?

YES : Go to Step 4.

NO : Repair it. Then go to Step 6.

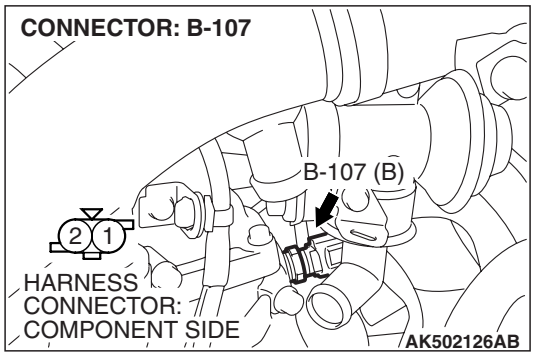

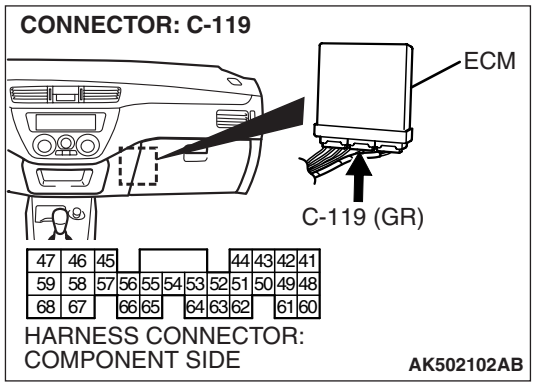

STEP 4. Check harness connector C-119 at ECM for damage.

Q: Is the harness connector in good condition?

YES : Go to Step 5.

NO : Repair or replace it. Refer to GROUP 00E, Harness Connector Inspection P.00E-2. Then go to Step 6.

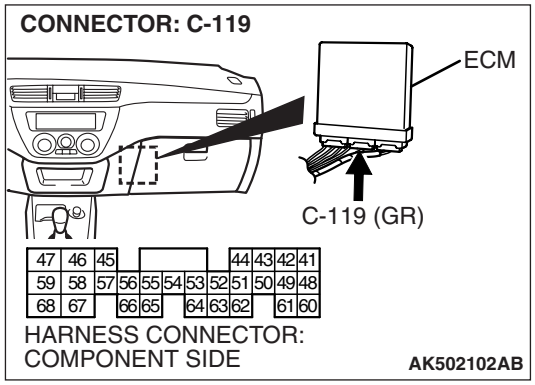

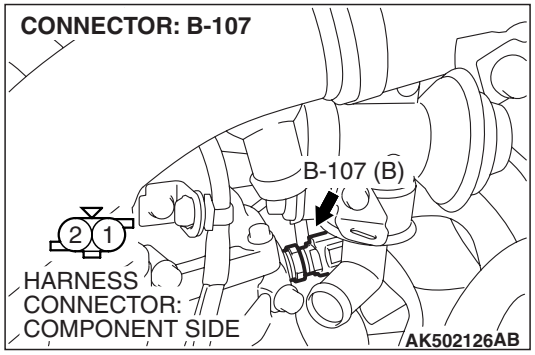

STEP 5. Check the engine coolant temperature sensor.

(1) Disconnect the engine coolant temperature sensor connector B-107.

(2) Remove the engine coolant temperature sensor.

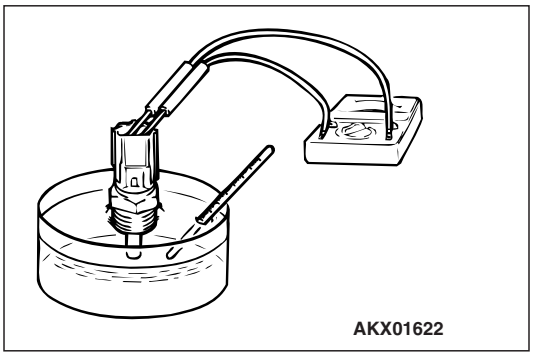

(3) With the temperature sensing portion of engine coolant temperature sensor immersed in hot water, check resistance.

Standard value:

14 – 17 kΩ [at – 20° C (– 4° F)]
5.1 – 6.5 kΩ [at 0° C (32° F)]
2.1 – 2.7 kΩ [at 20° C (68° F)]
0.9 – 1.3 kΩ [at 40° C (104° F)]
0.48 – 0.68 kΩ [at 60° C (140° F)]
0.26 – 0.36 kΩ [at 80° C (176° F)]

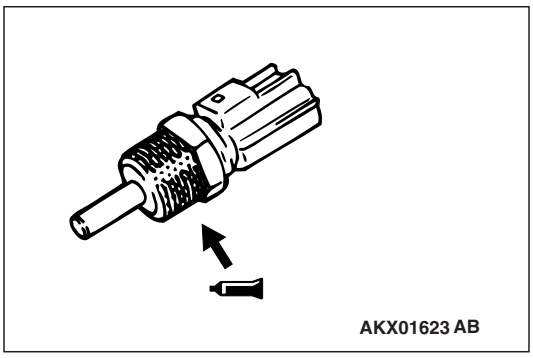

(4) Apply 3M™ AAD part number 8731 or equivalent on the screw section of the engine coolant temperature sensor.

(5) Install the engine coolant temperature sensor, and tighten to the specified torque.

Tightening torque: 29 ±10 N· m (22 ±6 ft-lb)

Q: Is the measured resistance at the standard value?

YES : Replace the ECM. Then go to Step 6.

NO : Replace the engine coolant temperature sensor. Then go to Step 6.

STEP 6. Test the OBD-II drive cycle.

(1) Carry out a test drive with the drive cycle pattern. Refer to GROUP 13A, Diagnostic Function –OBD-II Drive Cycle – Pattern 23 P.13A-12.

(2) Check the diagnostic trouble code (DTC).

Q: Is DTC P0117 set?

YES : Retry the troubleshooting.

NO : The inspection is complete.

DTC P0118: Engine Coolant Temperature Circuit High Input

Enging Coolant Temperature Sensor Circuit

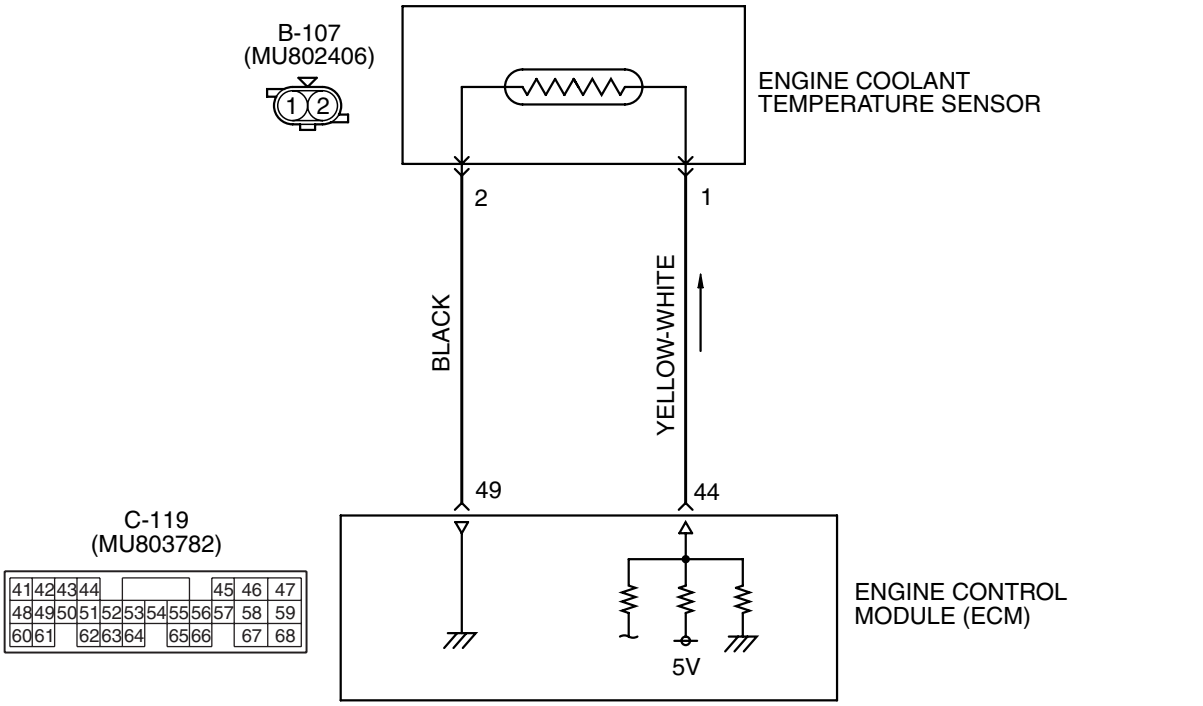

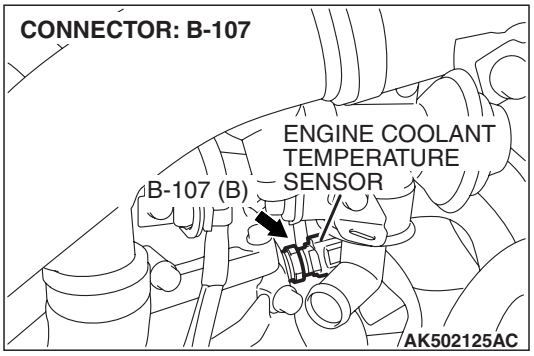

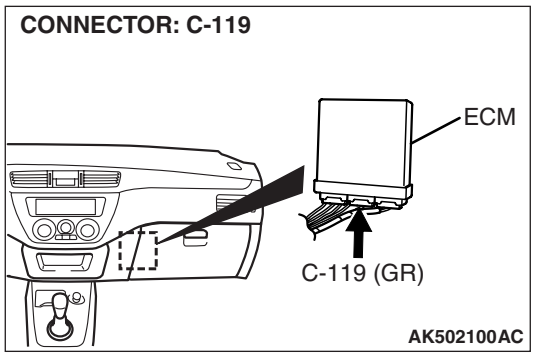

CIRCUIT OPERATION

- 5-volt voltage is applied to the engine coolant temperature sensor output terminal (terminal No. 1) from the ECM (terminal No. 44) via the resistor in the ECM. The ground terminal (terminal No. 2) is grounded with ECM (terminal No. 49).
- The engine coolant temperature sensor is a negative temperature coefficient type of resistor. It has the characteristic that when the engine coolant temperature rises the resistance decreases.
- The engine coolant temperature sensor output voltage increases when the resistance increases and decreases when the resistance decreases.

TECHNICAL DESCRIPTION

- The engine coolant temperature sensor converts the engine coolant temperature to a voltage and outputs it.
- The ECM checks whether this voltage is within a specified range.

DESCRIPTIONS OF MONITOR METHODS

- Engine coolant temperature sensor output voltage is out of specified range.

MONITOR EXECUTION

- Continuous

MONITOR EXECUTION CONDITIONS (Other monitor and Sensor)

Other Monitor (There is no temporary DTC stored in memory for the item monitored below)

- Not applicable

Sensor (The sensor below is determined to be normal)

- Not applicable

DTC SET CONDITIONS

Logic Flow Chart

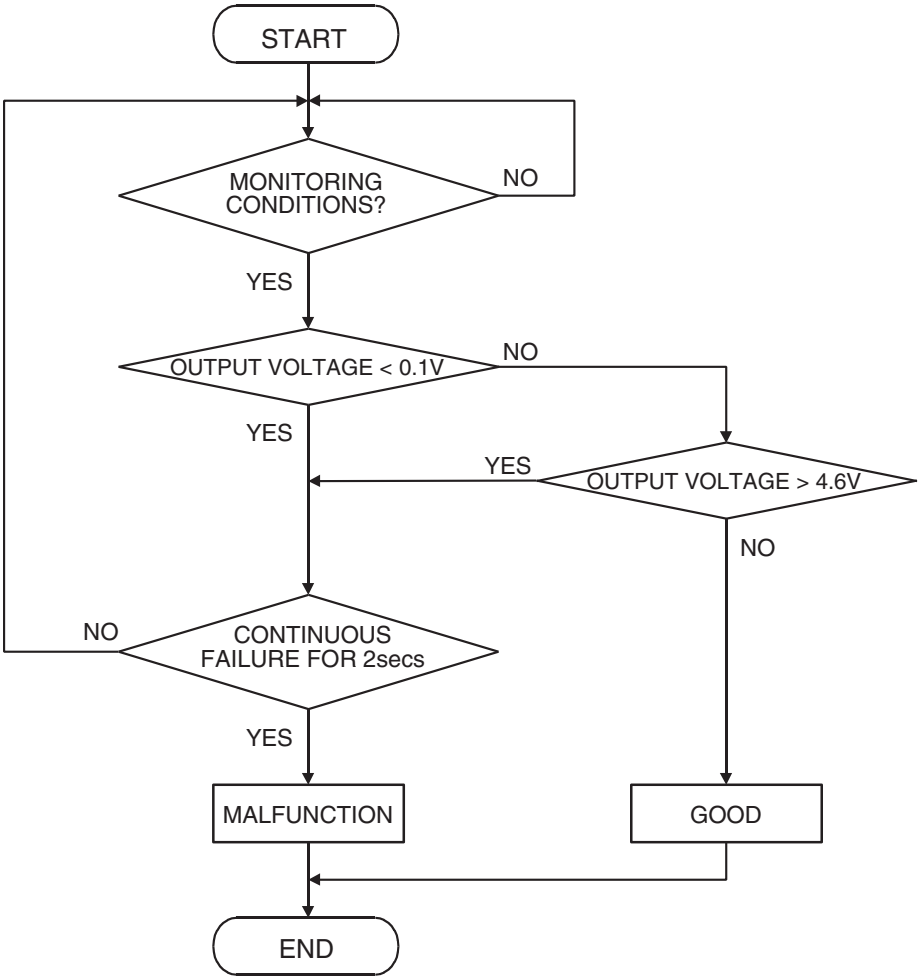

AK301426

Check Condition

- 2 seconds or more have passed since the engine staring sequence was completed.

Judgement Criterion

- Engine coolant temperature sensor output voltage has continued to be 4.6 volts or higher [corresponding to a coolant temperature of –45° C (–49° F) or lower] for 2 seconds.

OBD-II DRIVE CYCLE PATTERN

Refer to Diagnostic Function–OBD-II Drive Cycle – Pattern 23 P.13A-12.

TROUBLESHOOTING HINTS (The most likely causes for this code to be set are:)

- Engine coolant temperature sensor failed.
- Open or shorted engine coolant temperature sensor circuit, or connector damage.
- ECM failed.

DIAGNOSIS

Required Special Tools:

- MB991958: Scan Tool (M.U.T.-III Sub Assembly)
  - MB991824: V.C.I.
  - MB991827: USB Cable
  - MB991911: Main Harness B

STEP 1. Using scan tool MB991958, check data list item 21: Engine Coolant Temperature Sensor.

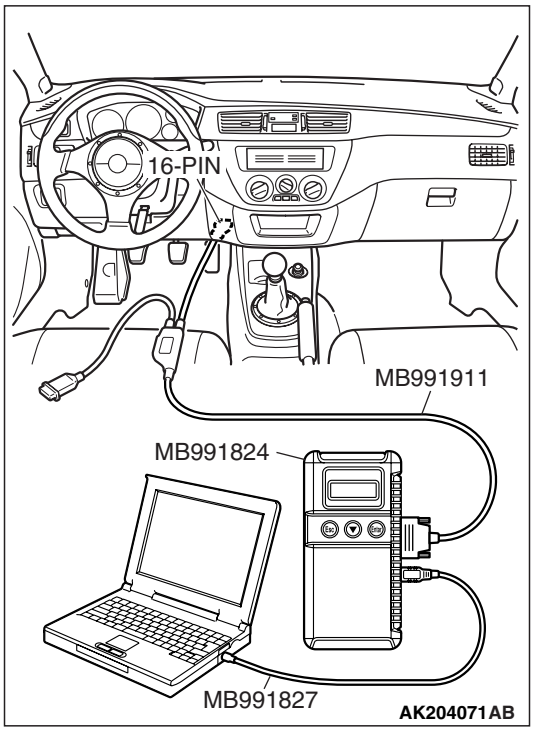

⚠ CAUTION

To prevent damage to scan tool MB991958, always turn the ignition switch to the "LOCK" (OFF) position before connecting or disconnecting scan tool MB991958.

(1) Connect scan tool MB991958 to the data link connector.
(2) Turn the ignition switch to the "ON" position.
(3) Set scan tool MB991958 to the data reading mode for item 21, Engine Coolant Temperature Sensor.
  - The engine coolant temperature and temperature shown with the scan tool should approximately match.

(4) Turn the ignition switch to the "LOCK" (OFF) position.

Q: Is the sensor operating properly?

YES : It can be assumed that this malfunction is intermittent. Refer to GROUP 00, How to Use Troubleshooting/Inspection Service Points –How to Cope with Intermittent Malfunctions P.00-13.

NO : Go to Step 2.

STEP 2. Check harness connector B-107 at the engine coolant temperature sensor for damage.

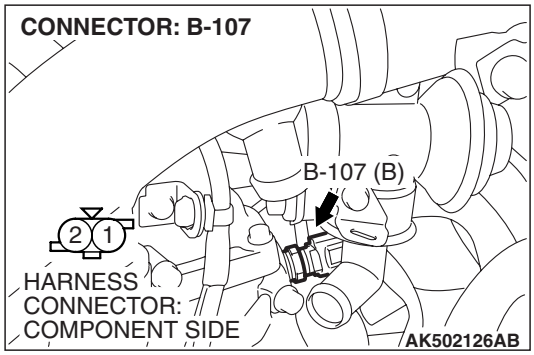

Q: Is the harness connector in good condition?

YES : Go to Step 3.

NO : Repair or replace it. Refer to GROUP 00E, Harness Connector Inspection P.00E-2. Then go to Step 11.

STEP 3. Measure the sensor supply voltage at engine coolant temperature sensor harness side connector B-107.

(1) Disconnect connector B-107 and measure at the harness side.
(2) Turn the ignition switch to the "ON" position.

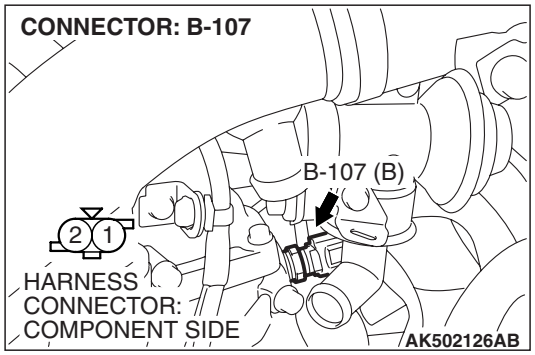

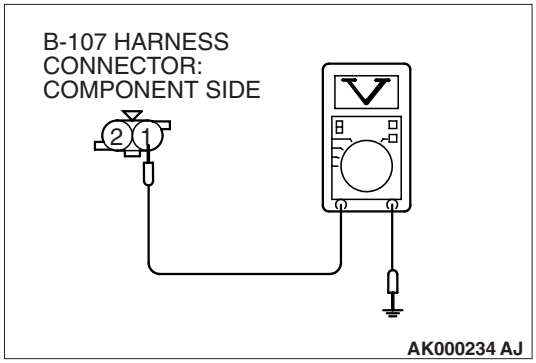

(3) Measure the voltage between terminal No. 1 and ground.
- Voltage should be between 4.5 and 4.9 volts.

(4) Turn the ignition switch to the "LOCK" (OFF) position.

Q: Is the measured voltage between 4.5 and 4.9 volts?

YES : Go to Step 7.
NO : Go to Step 4.

STEP 4. Measure the sensor supply voltage at ECM connector C-119 by backprobing.

(1) Do not disconnect the ECM connector C-119.
(2) Disconnect the engine coolant temperature sensor connector B-107.
(3) Turn the ignition switch to the "ON" position.

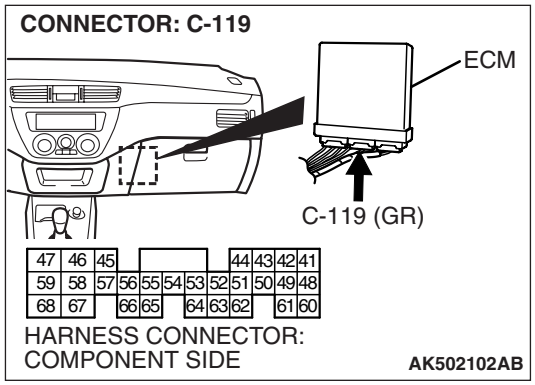

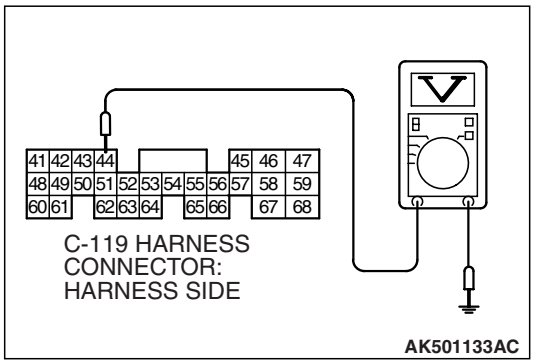

(4) Measure the voltage between terminal No. 44 and ground by backprobing.
- Voltage should be between 4.5 and 4.9 volts.

(5) Turn the ignition switch to the "LOCK" (OFF) position.

Q: Is the measured voltage between 4.5 and 4.9 volts?

YES : Go to Step 5.
NO : Go to Step 6.

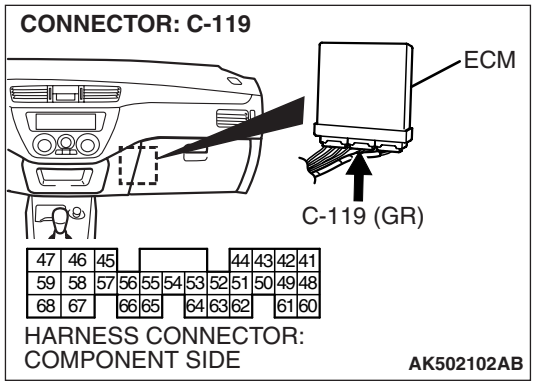

STEP 5. Check harness connector C-119 at ECM for damage.

Q: Is the harness connector in good condition?

YES : Repair harness wire between engine coolant temperature sensor connector B-107 and ECM connector C-119 because of open circuit. Then go to Step 11.

NO : Repair or replace it. Refer to GROUP 00E, Harness Connector Inspection P.00E-2. Then go to Step 11.

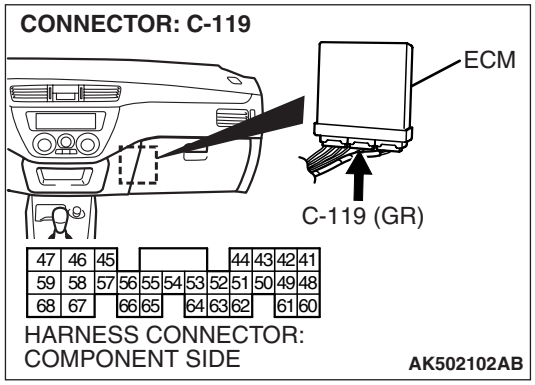

STEP 6. Check harness connector C-119 at ECM for damage.

Q: Is the harness connector in good condition?

YES : Replace the ECM. Then go to Step 11.

NO : Repair or replace it. Refer to GROUP 00E, Harness Connector Inspection P.00E-2. Then go to Step 11.

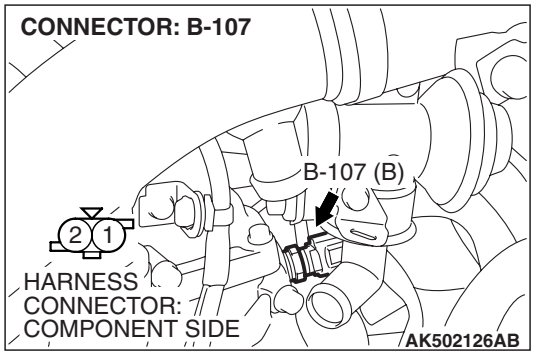

STEP 7. Check for continuity at engine coolant temperature sensor harness side connector B-107.

(1) Disconnect connector B-107 and measure at the harness side.

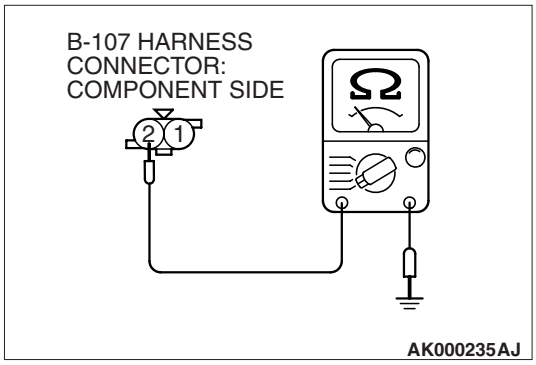

(2) Check for the continuity between terminal No. 2 and ground.
- Should be less than 2 ohms.

Q: Does continuity exist?

YES : Go to Step 10.

NO : Go to Step 8.

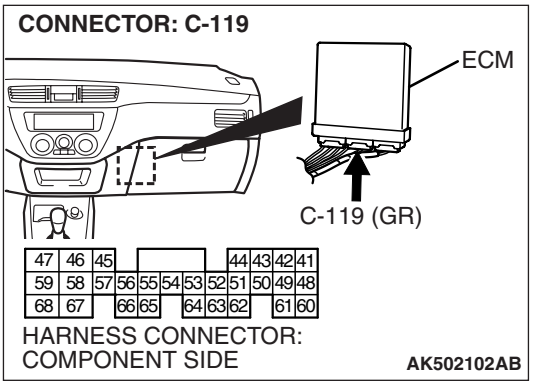

STEP 8. Check harness connector C-119 at ECM for damage.

Q: Is the harness connector in good condition?

YES : Go to Step 9.

NO : Repair or replace it. Refer to GROUP 00E, Harness Connector Inspection P.00E-2. Then go to Step 11.

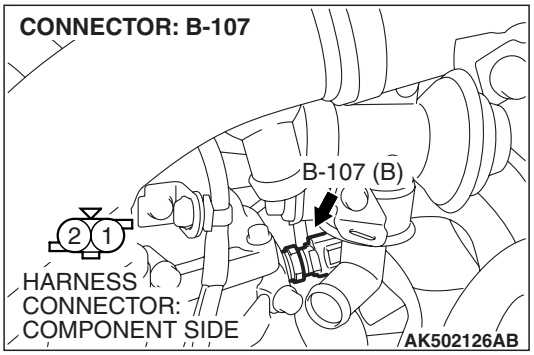

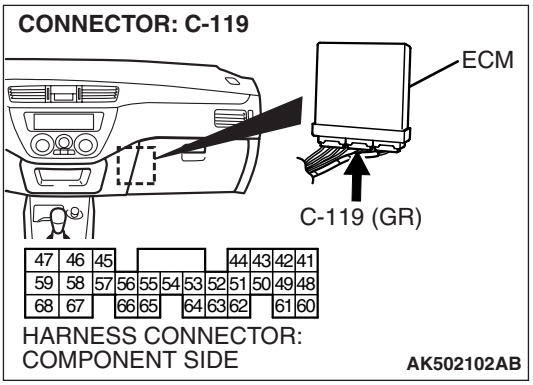

STEP 9. Check for open circuit between engine coolant sensor connector B-107 (terminal No. 2) and ECM connector C-119 (terminal No. 49).

Q: Is the harness wire in good condition?

YES : Replace the ECM. Then go to Step 11.

NO : Repair it. Then go to Step 11.

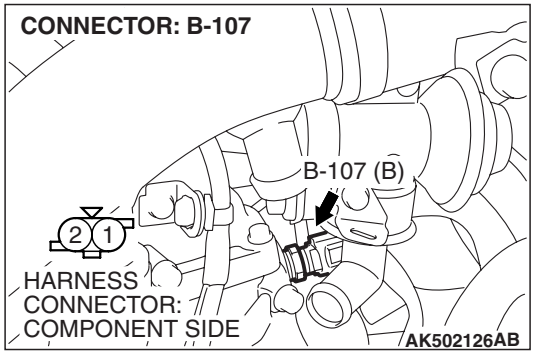

STEP 10. Check the engine coolant temperature sensor.

(1) Disconnect the engine coolant temperature sensor connector B-107.
(2) Remove the engine coolant temperature sensor.

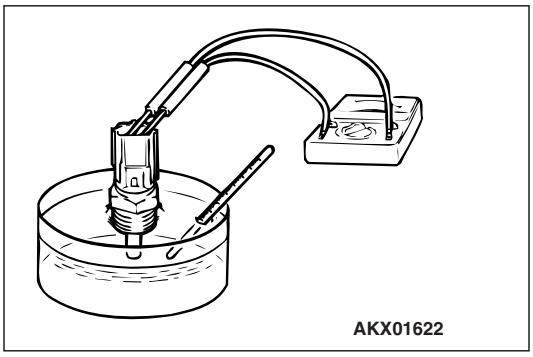

(3) With the temperature sensing portion of engine coolant temperature sensor immersed in hot water, check resistance.

Standard value:
14 – 17 kΩ [at – 20° C (– 4° F)]
5.1 – 6.5 kΩ [at 0° C (32° F)]
2.1 – 2.7 kΩ [at 20° C (68° F)]
0.9 – 1.3 kΩ [at 40° C (104° F)]
0.48 – 0.68 kΩ [at 60° C (140° F)]
0.26 – 0.36 kΩ [at 80° C (176° F)]

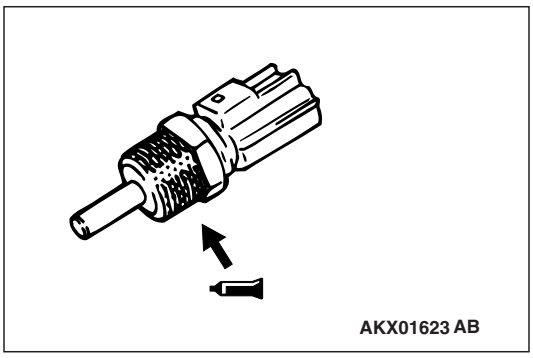

(4) Apply 3M™ AAD part number 8731 or equivalent on the screw section of the engine coolant temperature sensor.
(5) Install the engine coolant temperature sensor, and tighten to the specified torque.

Tightening torque: 29 ±10 N· m (22 ±6 ft-lb)

Q: Is the measured resistance at the standard value?

YES : Replace the ECM. Then go to Step 11.
NO : Replace the engine coolant temperature sensor. Then go to Step 11.

STEP 11. Test the OBD-II drive cycle.

(1) Carry out a test drive with the drive cycle pattern. Refer to GROUP 13A, Diagnostic Function –OBD-II Drive Cycle – Pattern 23 P.13A-12.
(2) Check the diagnostic trouble code (DTC).

Q: Is DTC P0118 set?

YES : Retry the troubleshooting.
NO : The inspection is complete.

DTC P0121: Throttle Position Sensor Circuit Range/Performance Problem

Throttle Position Sensor (TPS) Circuit

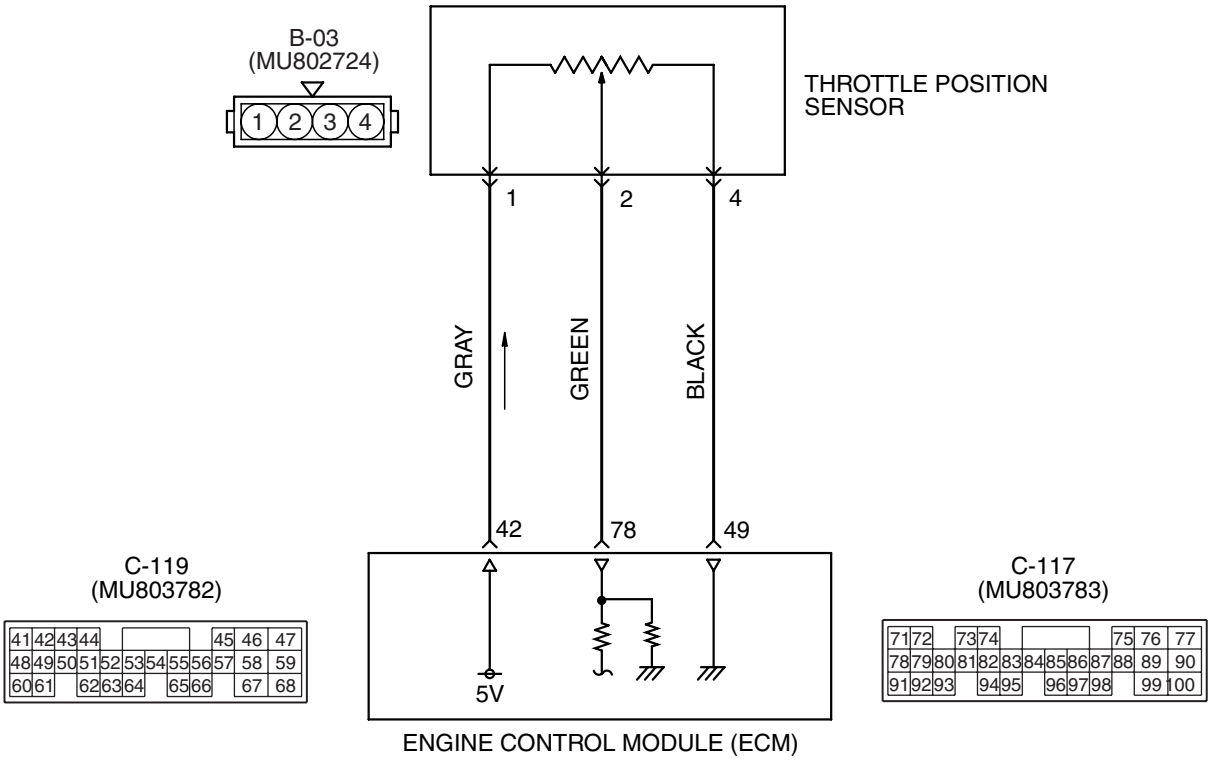

AK502065

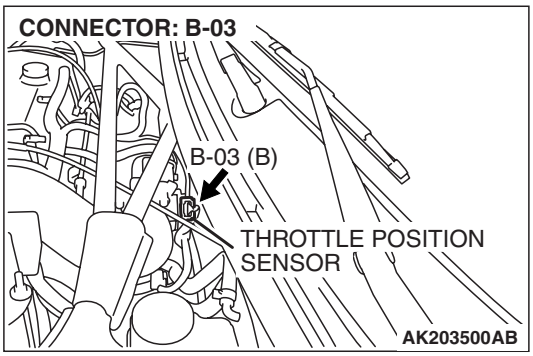

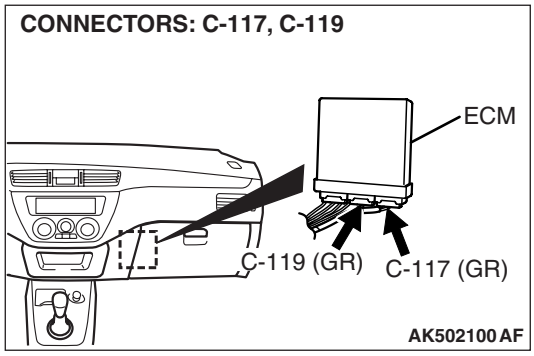

CIRCUIT OPERATION

- A 5-volt power supply is applied on the throttle position sensor power terminal (terminal No. 1) from the ECM (terminal No. 42).
  The ground terminal (terminal No. 4) is grounded with ECM (terminal No. 49).
- When the throttle valve shaft is turned from the idle position to the fully opened position, the resistor between the throttle position sensor output terminal (terminal No. 2) and ground terminal will increase according to the rotation.

TECHNICAL DESCRIPTION

- The throttle position sensor outputs voltage which corresponds to the throttle valve opening angle.
- The ECM checks whether the voltage is within a specified range.

DESCRIPTIONS OF MONITOR METHODS

- Compare load value with throttle position sensor output voltage.

MONITOR EXECUTION

- Continuous

TSB Revision

MONITOR EXECUTION CONDITIONS (Other monitor and Sensor)

Other Monitor (There is no temporary DTC stored in memory for the item monitored below)

- Not applicable

Sensor (The sensor below is determined to be normal)

- Volume airflow sensor

DTC SET CONDITIONS <Range/Performance problem- Relation between main and sub>

Logic Flow Chart

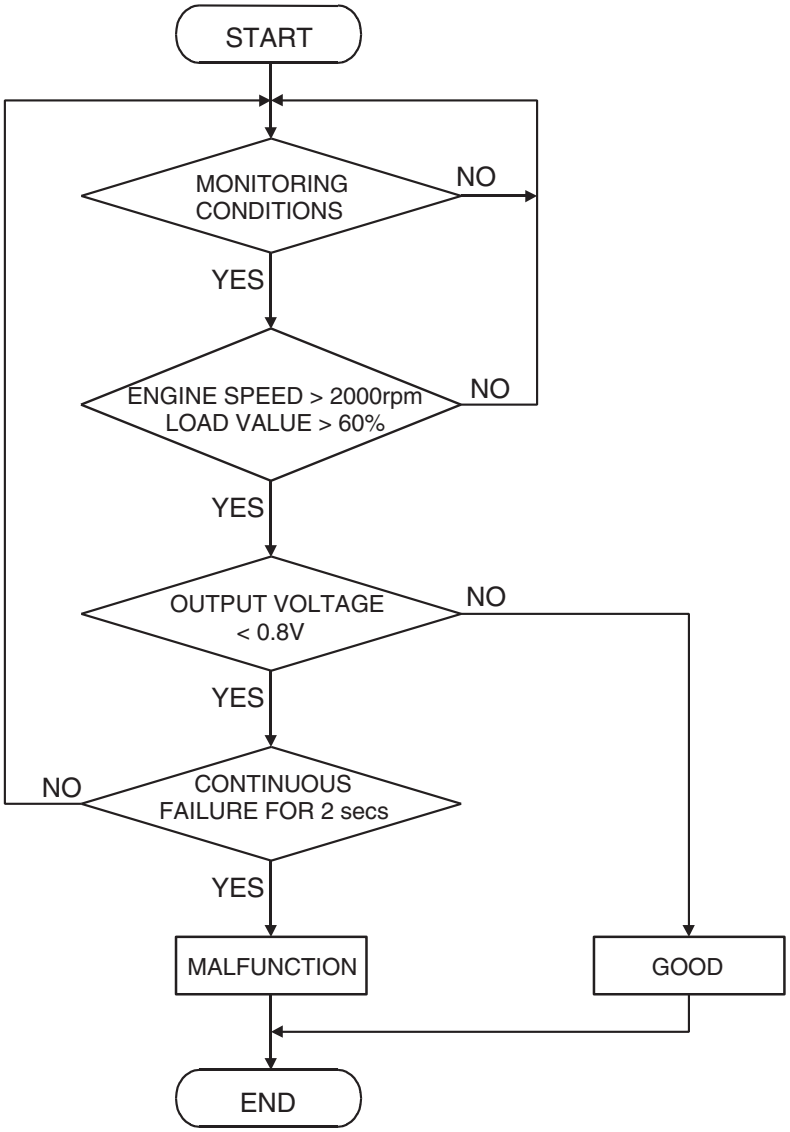

AK301427

Check Conditions

- 2 seconds or more have passed since the engine staring sequence was completed.
- Engine speed is higher than 2,000 r/min.
- Volumetric efficiency is higher than 60 percent.

Judgement Criterion

- Throttle position sensor output voltage has continued to be 0.8 volt or lower for 2 seconds.

DTC SET CONDITIONS <Range/Performance problem- relation between main and sub>

Logic Flow Chart

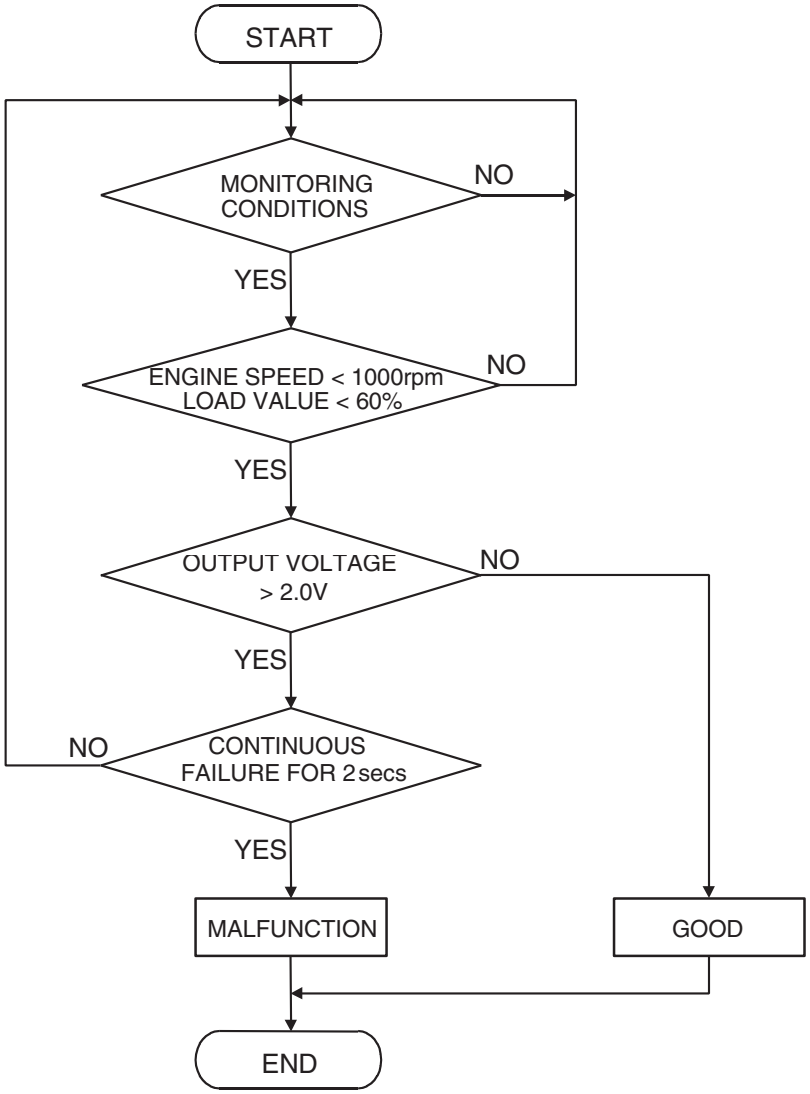

AK401730

Check Conditions

- 2 seconds or more have passed since the engine staring sequence was completed.
- Engine speed is lower than 1,000 r/min.
- Volumetric efficiency is lower than 60 percent.

Judgement Criterion

- Throttle position sensor output voltage has continued to be 2.0 volts or higher for 2 seconds.

OBD-II DRIVE CYCLE PATTERN

Refer to Diagnostic Function –OBD-II Drive Cycle – Pattern 7 P.13A-12.

TROUBLESHOOTING HINTS (The most likely causes for this code to be set are:)

- Throttle position sensor failed or incorrectly adjusted.
- Open throttle position sensor circuit, harness damage, or connector damage.
- ECM failed.

DIAGNOSIS

Required Special Tools:

- MB991958: Scan Tool (M.U.T.-III Sub Assembly)
  - MB991824: V.C.I.
  - MB991827: USB Cable
  - MB991911: Main Harness B

STEP 1. Using scan tool MB991958, check data list item 14: Throttle Position Sensor.

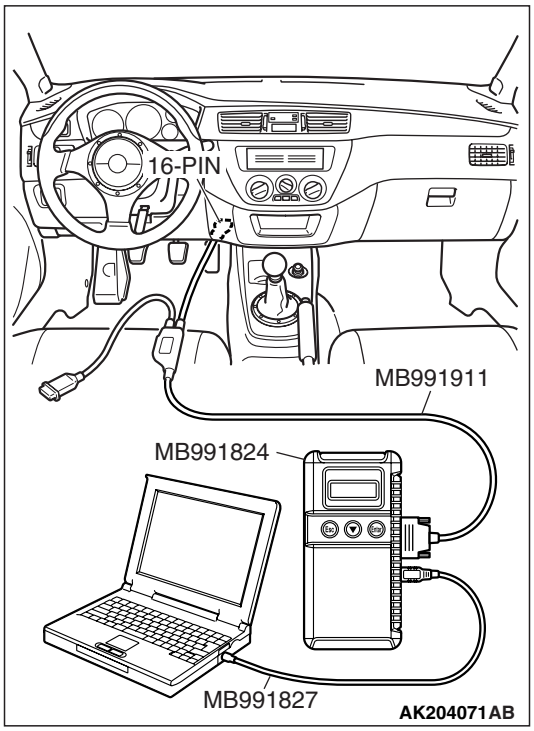

⚠ CAUTION

To prevent damage to scan tool MB991958, always turn the ignition switch to the "LOCK" (OFF) position before connecting or disconnecting scan tool MB991958.

(1) Connect scan tool MB991958 to the data link connector.
(2) Turn the ignition switch to the "ON" position.
(3) Set scan tool MB991958 to the data reading mode for item 14, Throttle Position Sensor.
  - With the throttle valve in the idle position, voltage should be between 0.535 and 0.735 volt.
  - With the throttle valve in the full-open position, voltage should be between 4.5 and 5.0 volts.

(4) Turn the ignition switch to the "LOCK" (OFF) position.

Q: Is the sensor operating properly?

YES : It can be assumed that this malfunction is intermittent. Refer to GROUP 00, How to Use Troubleshooting/Inspection Service Points –How to Cope with Intermittent Malfunctions P.00-13.

NO : Go to Step 2.

STEP 2. Check harness connector B-03 at throttle position sensor for damage.

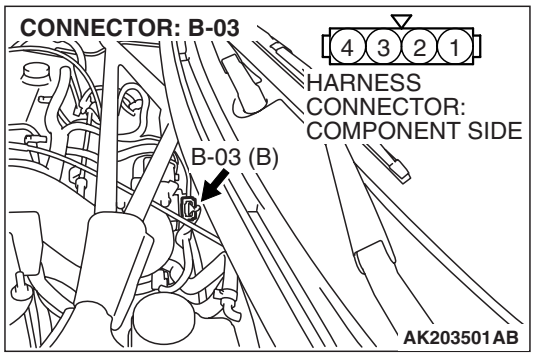

Q: Is the harness connector in good condition?

YES : Go to Step 3.

NO : Repair or replace it. Refer to GROUP 00E, Harness Connector Inspection P.00E-2. Then go to Step 14.

STEP3. Check the throttle position sensor.

(1) Disconnect connector B-03.

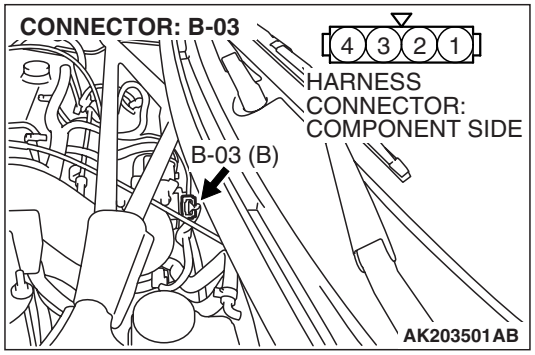

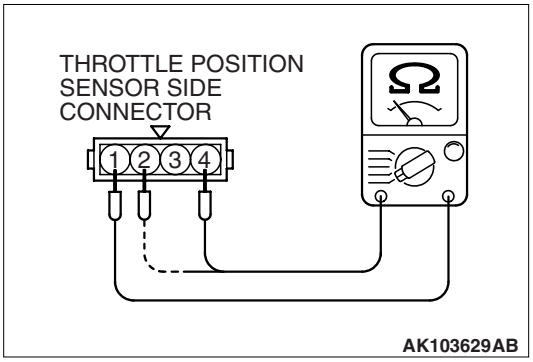

(2) Measure the resistance between throttle position sensor side connector terminal No. 1 and No. 4.

Standard value: 3.5 – 6.5 kΩ

(3) Measure resistance between the throttle position sensor side connector terminal No. 1 and No. 2.

(4) Move the throttle valve from the idle position to the full-open position.

- Resistance should change smoothly in proportion to the opening angle of the throttle valve.

Q: Is the measured resistance normal?

YES : Go to Step 4.

NO : Replace the throttle position sensor. Refer to GROUP 13A, Throttle Body Assembly –Disassembly and Assembly P.13A-884. Then go to Step 14.

STEP 4. Measure the sensor supply voltage at throttle position sensor harness side connector B-03.

(1) Disconnect connector B-03 and measure at the harness side.

(2) Turn the ignition switch to the "ON" position.

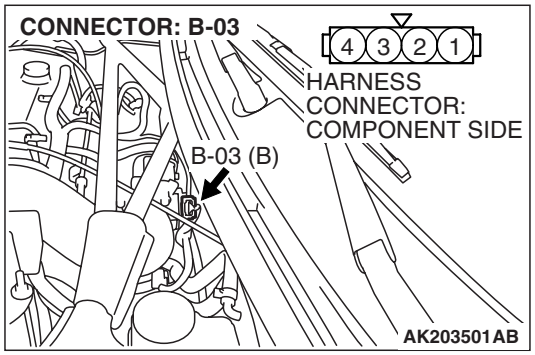

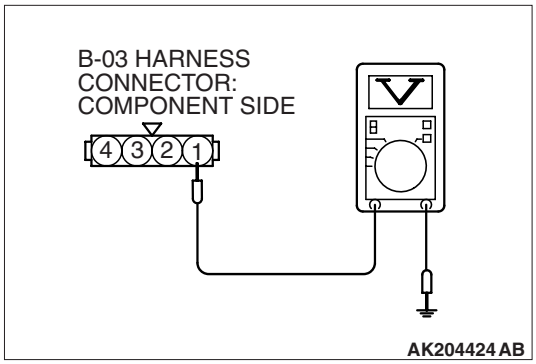

(3) Measure the voltage between terminal No. 1 and ground.

- Voltage should be between 4.8 and 5.2 volts.

(4) Turn the ignition switch to the "LOCK" (OFF) position.

Q: Is the measured voltage between 4.8 and 5.2 volts?

YES : Go to Step 7.

NO : Go to Step 5.

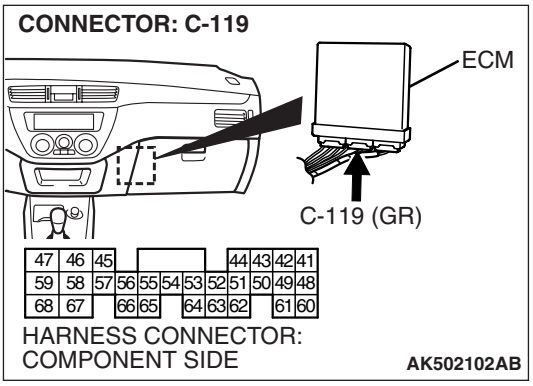

STEP 5. Check harness connector C-119 at ECM for damage.

Q: Is the harness connector in good condition?

YES : Go to Step 6.

NO : Repair or replace it. Refer to GROUP 00E, Harness Connector Inspection P.00E-2. Then go to Step 14.

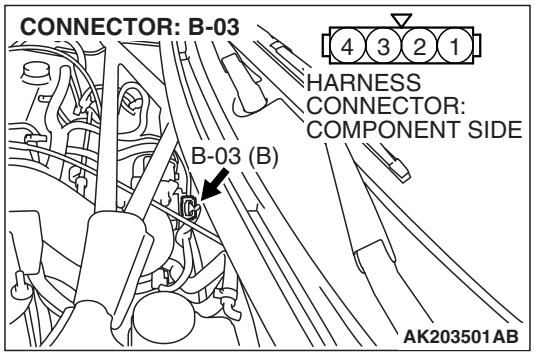

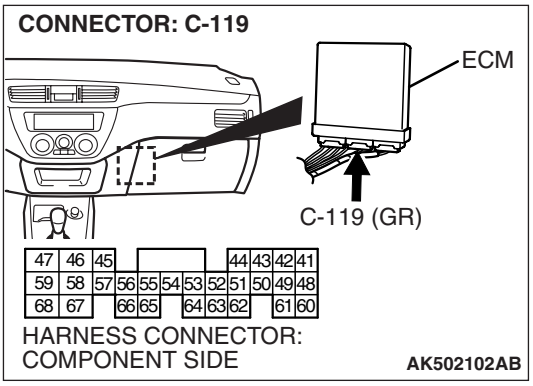

STEP 6. Check for harness damage between throttle position sensor connector B-03 (terminal No. 1) and ECM connector C-119 (terminal No. 42).

Q: Is the harness wire in good condition?

YES : Replace the ECM. Then go to Step 14.

NO : Repair it. Then go to Step 14.

STEP 7. Check for continuity at throttle position sensor harness side connector B-03.

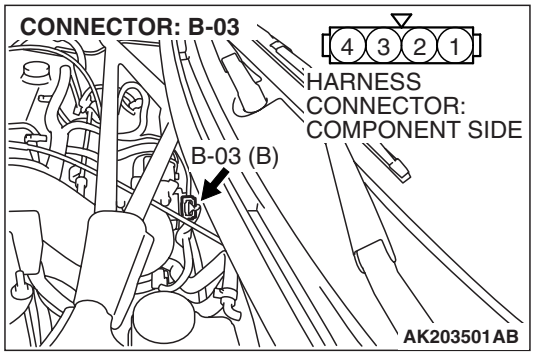

(1) Disconnect connector B-03 and measure at the harness side.

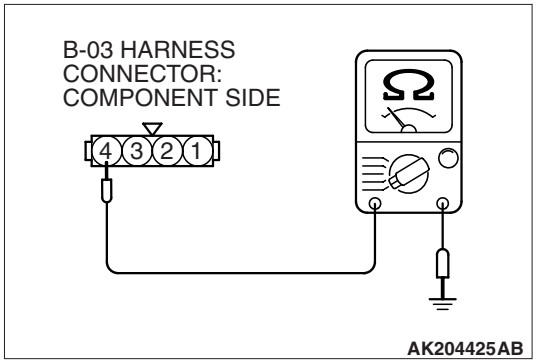

(2) Measure the continuity between terminal No. 4 and ground.
- Should be less than 2 ohms.

Q: Does continuity exist?

YES : Go to Step 10.
NO : Go to Step 8.

STEP 8. Check harness connector C-119 at ECM for damage.

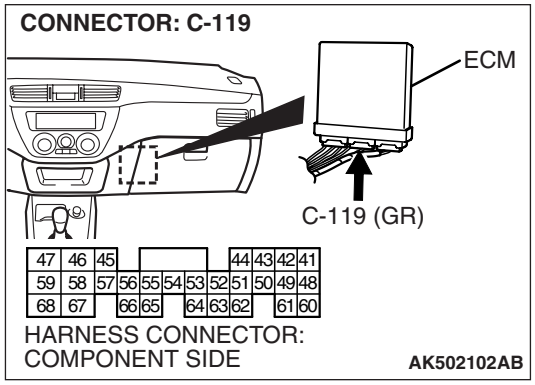

Q: Is the harness connector in good condition?

YES : Go to Step 9.
NO : Repair or replace it. Refer to GROUP 00E, Harness Connector Inspection P.00E-2. Then go to Step 14.

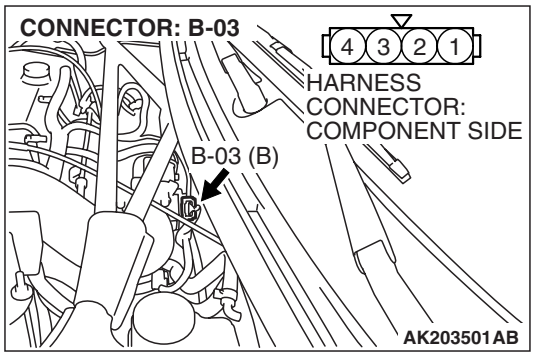

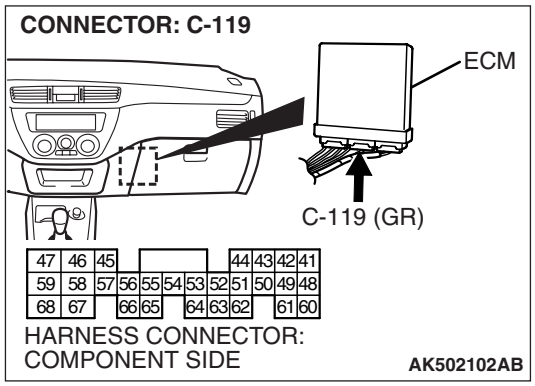

STEP 9. Check for open circuit and harness damage between throttle position sensor connector B-03 (terminal No. 4) and ECM connector C-119 (terminal No. 49).

Q: Is the harness wire in good condition?

YES : Replace the ECM. Then go to Step 14.

NO : Repair it. Then go to Step 14.

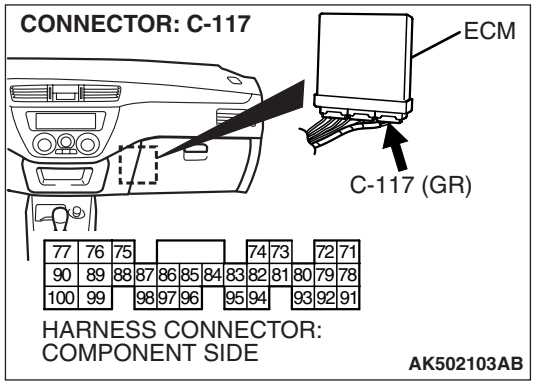

STEP 10. Check harness connector C-117 at ECM for damage.

Q: Is the harness connector in good condition?

YES : Go to Step 11.

NO : Repair or replace it. Refer to GROUP 00E, Harness Connector Inspection P.00E-2. Then go to Step 14.

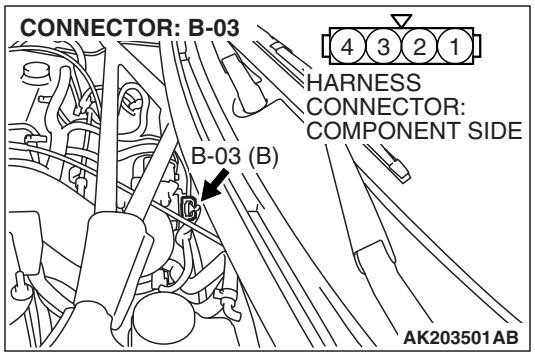

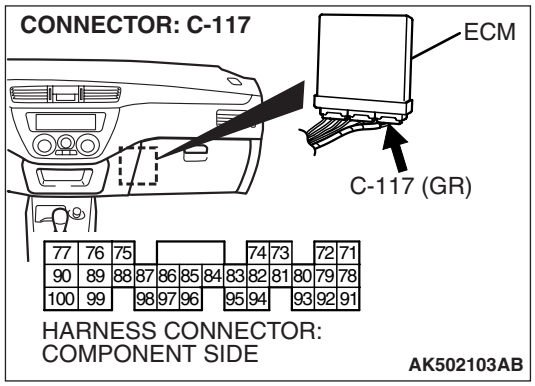

STEP 11. Check for harness damage between throttle position sensor connector B-03 (terminal No. 2) and ECM connector C-117 (terminal No. 78).

Q: Is the harness wire in good condition?

YES : Go to Step 12.

NO : Repair it. Then go to Step 14.

STEP 12. Check the incorrectly adjusted throttle position sensor.

Refer to GROUP 13A, Throttle Position Sensor Adjustment P.13A-862.

Q: Is the output voltage normal?

YES : Go to Step 13.

NO : Adjust it. Then go to Step 14.

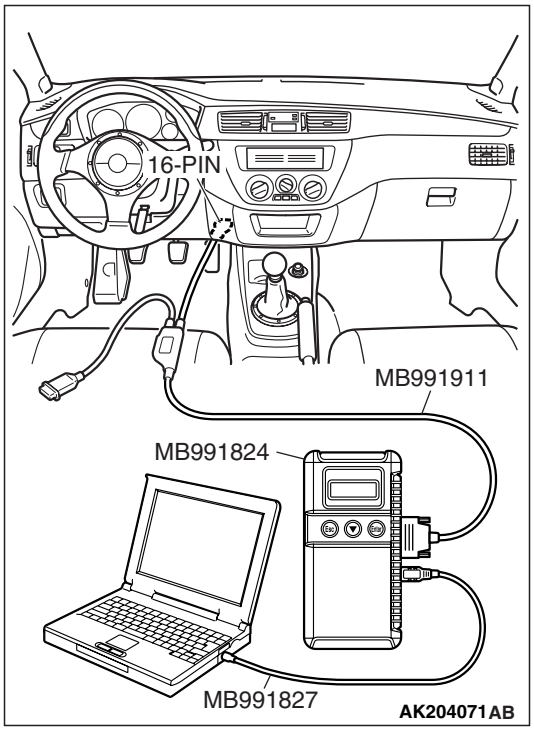

STEP 13. Using scan tool MB991958, check data list item 14: Throttle Position Sensor.

⚠ CAUTION

To prevent damage to scan tool MB991958, always turn the ignition switch to the "LOCK" (OFF) position before connecting or disconnecting scan tool MB991958.

(1) Connect scan tool MB991958 to the data link connector.
(2) Turn the ignition switch to the "ON" position.
(3) Set scan tool MB991958 to the data reading mode for item 14, Throttle Position Sensor.
- With the throttle valve in the idle position, voltage should be between 0.535 and 0.735 volt.
- With the throttle valve in the full-open position, voltage should be between 4.5 and 5.0 volts.

(4) Turn the ignition switch to the "LOCK" (OFF) position.

Q: Is the sensor operating properly?

YES : It can be assumed that this malfunction is intermittent. Refer to GROUP 00, How to Use Troubleshooting/Inspection Service Points –How to Cope with Intermittent Malfunctions P.00-13.

NO : Replace the ECM. Then go to Step 14.

STEP 14. Test the OBD-II drive cycle.

(1) Carry out a test drive with the drive cycle pattern. Refer to GROUP 13A, Diagnostic Function –OBD-II Drive Cycle – Pattern 7 P.13A-12.
(2) Check the diagnostic trouble code (DTC).

Q: Is DTC P0121 set?

YES : Retry the troubleshooting.

NO : The inspection is complete.

DTC P0122: Throttle Position Sensor Circuit Low Input

Throttle Position Sensor (TPS) Circuit

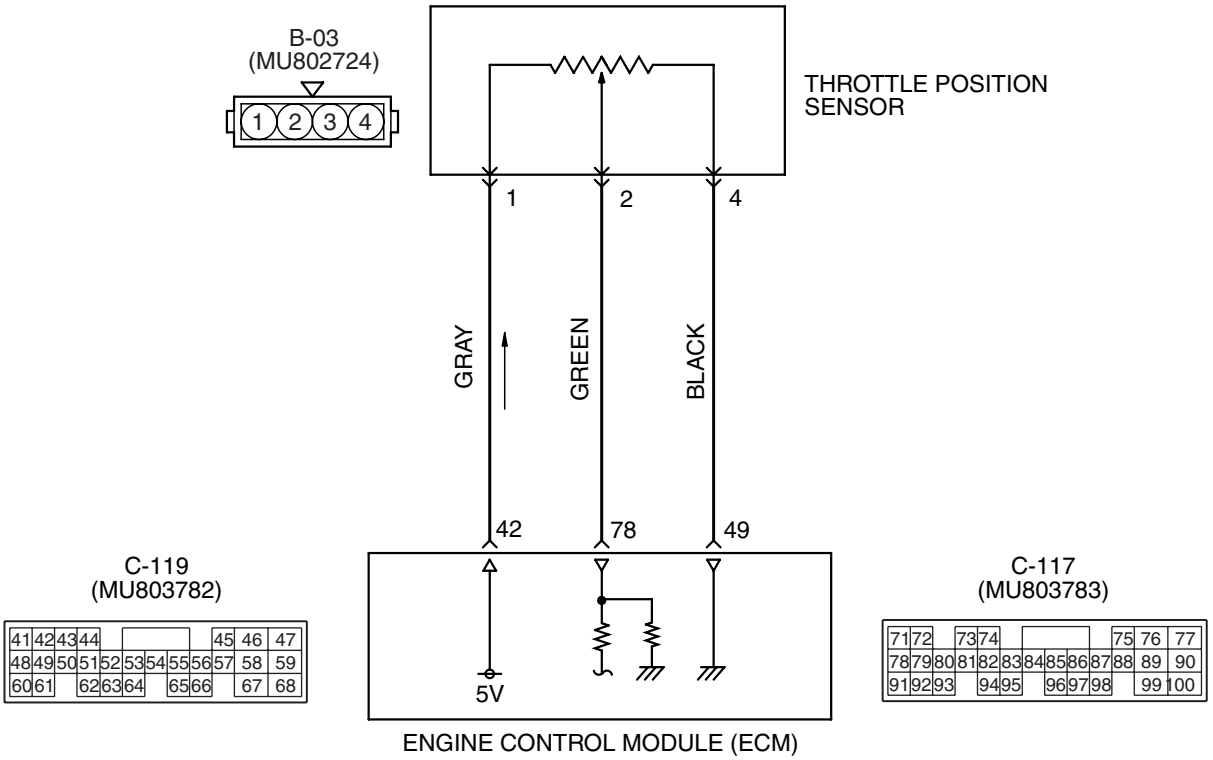

AK502065

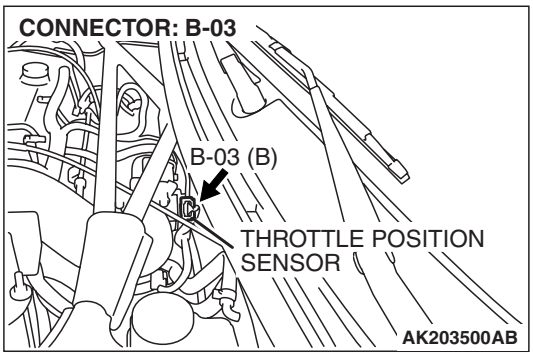

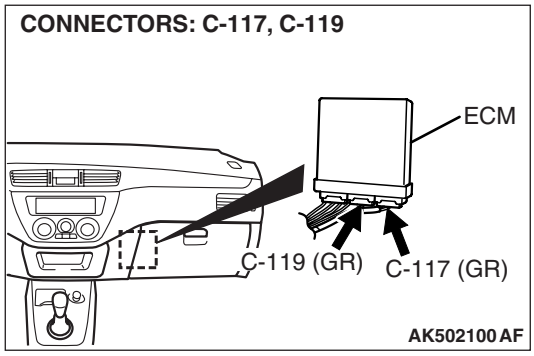

CIRCUIT OPERATION

- A 5-volt power supply is applied on the throttle position sensor power terminal (terminal No. 1) from the ECM (terminal No. 42).
  The ground terminal (terminal No. 4) is grounded with ECM (terminal No. 49).
- When the throttle valve shaft is turned from the idle position to the fully opened position, the resistor between the throttle position sensor output terminal (terminal No. 2) and ground terminal will increase according to the rotation.

TECHNICAL DESCRIPTION

- The throttle position sensor outputs voltage which corresponds to the throttle valve opening angle.
- The ECM checks whether the voltage is within a specified range. In addition, it checks that the voltage output does not become too high while the engine is at idle.

DESCRIPTIONS OF MONITOR METHODS

- Throttle position sensor output voltage is out of specified range.

MONITOR EXECUTION

- Continuous

MONITOR EXECUTION CONDITIONS (Other monitor and Sensor)

Other Monitor (There is no temporary DTC stored in memory for the item monitored below)

- Not applicable

Sensor (The sensor below is determined to be normal)

- Not applicable

DTC SET CONDITIONS

Logic Flow Chart

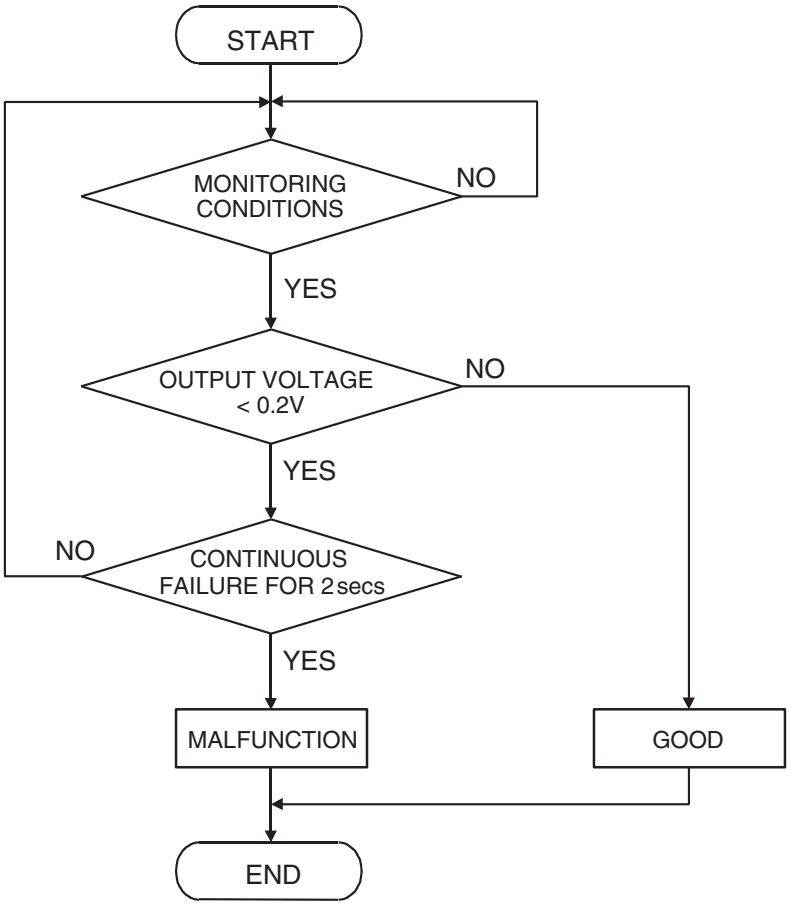

AK301429

Check Condition

- 2 seconds or more have passed since the engine starting sequence was completed.

Judgement Criterion

- Throttle position sensor output voltage has continued to be 0.2 volt or lower for 2 seconds.

OBD-II DRIVE CYCLE PATTERN

Refer to Diagnostic Function –OBD-II Drive Cycle – Pattern 23 P.13A-12.

TSB Revision

TROUBLESHOOTING HINTS (The most likely causes for this code to be set are:)

- Throttle position sensor failed or incorrectly adjusted.
- Open or shorted throttle position sensor circuit, or connector damage.
- ECM failed.

DIAGNOSIS

Required Special Tools:

- MB991958: Scan Tool (M.U.T.-III Sub Assembly)
  - MB991824: V.C.I.
  - MB991827: USB Cable
  - MB991911: Main Harness B

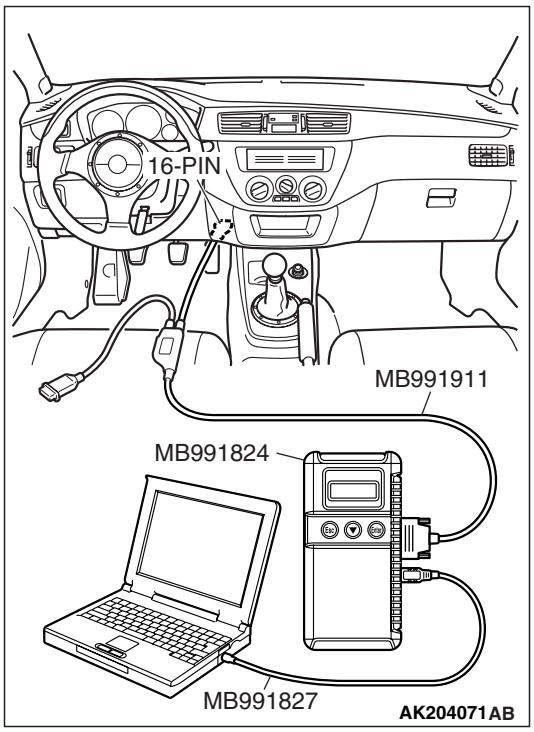

STEP 1. Using scan tool MB991958, check data list item 14: Throttle Position Sensor.

⚠ CAUTION

To prevent damage to scan tool MB991958, always turn the ignition switch to the "LOCK" (OFF) position before connecting or disconnecting scan tool MB991958.

(1) Connect scan tool MB991958 to the data link connector.
(2) Turn the ignition switch to the "ON" position.
(3) Set scan tool MB991958 to the data reading mode for item 14, Throttle Position Sensor.
  - With the throttle valve in the idle position, voltage should be between 0.535 and 0.735 volt.
  - With the throttle valve in the full-open position, voltage should be between 4.5 and 5.0 volts.

(4) Turn the ignition switch to the "LOCK" (OFF) position.

Q: Is the sensor operating properly?

YES : It can be assumed that this malfunction is intermittent. Refer to GROUP 00, How to Use Troubleshooting/Inspection Service Points –How to Cope with Intermittent Malfunctions P.00-13.

NO : Go to Step 2.

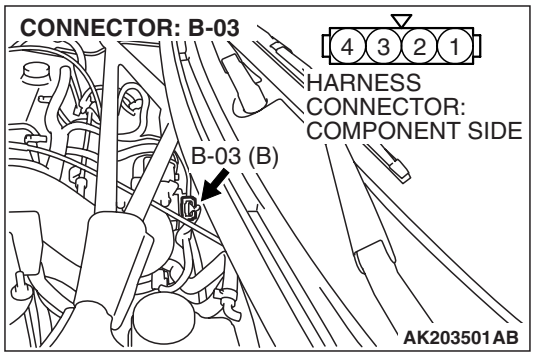

STEP 2. Check harness connector B-03 at throttle position sensor for damage.

Q: Is the harness connector in good condition?

YES : Go to Step 3.

NO : Repair or replace it. Refer to GROUP 00E, Harness Connector Inspection P.00E-2. Then go to Step 10.

STEP 3. Measure the sensor supply voltage at throttle position sensor harness side connector B-03.

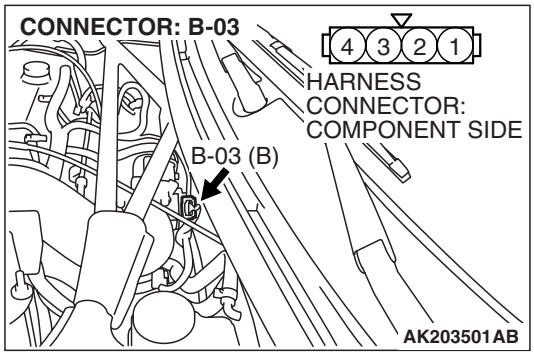

(1) Disconnect connector B-03 and measure at the harness side.
(2) Turn the ignition switch to the "ON" position.

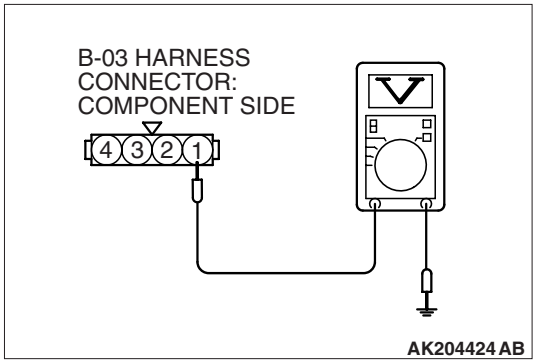

(3) Measure the voltage between terminal No. 1 and ground.
- Voltage should be between 4.8 and 5.2 volts.

(4) Turn the ignition switch to the "LOCK" (OFF) position.

Q: Is the measured voltage between 4.8 and 5.2 volts?

YES : Go to Step 6.
NO : Go to Step 4.

STEP 4. Check harness connector C-119 at ECM for damage.

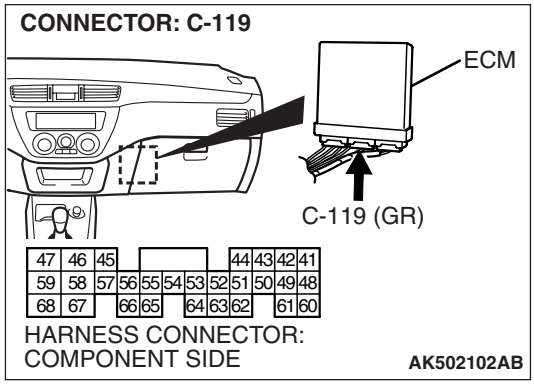

Q: Is the harness connector in good condition?

YES : Go to Step 5.
NO : Repair or replace it. Refer to GROUP 00E, Harness Connector Inspection P.00E-2. Then go to Step 10.

STEP 5. Check for open circuit and short circuit to ground between throttle position sensor connector B-03 (terminal No. 1) and ECM connector C-119 (terminal No. 42).

Q: Is the harness wire in good condition?

YES : Replace the ECM. Then go to Step 10.

NO : Repair it. Then go to Step 10.

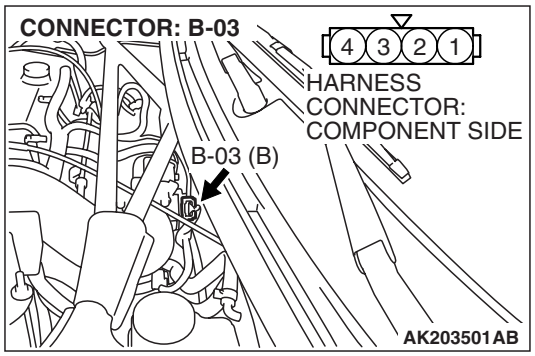

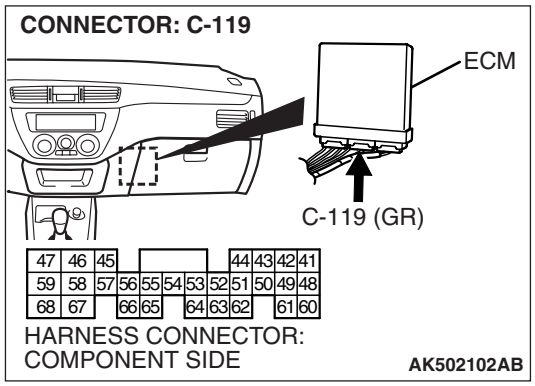

STEP 6. Check the throttle position sensor.

(1) Disconnect connector B-03.

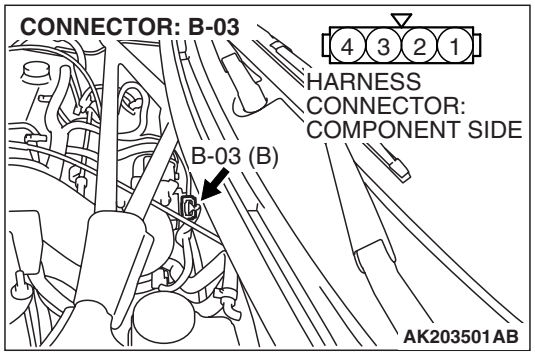

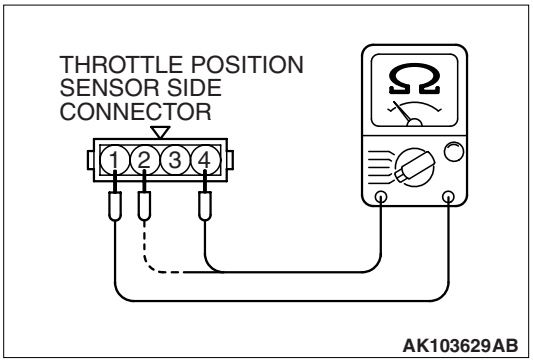

(2) Measure the resistance between throttle position sensor side connector terminal No. 1 and No. 4.

Standard value: 3.5 – 6.5 kΩ

(3) Measure resistance between the throttle position sensor side connector terminal No. 1 and No. 2.

(4) Move the throttle valve from the idle position to the full-open position.

- Resistance should change smoothly in proportion to the opening angle of the throttle valve.

Q: Is the measured resistance normal?

YES : Go to Step 7.

NO : Replace the throttle position sensor. Refer to GROUP 13A, Throttle Body Assembly –Disassembly and Assembly P.13A-884. Then go to Step 10.

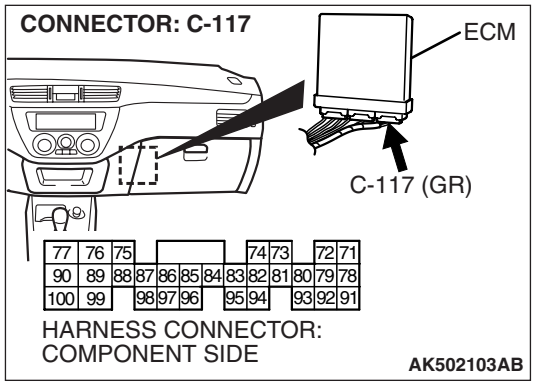

STEP 7. Check harness connector C-117 at ECM for damage.

Q: Is the harness connector in good condition?

YES : Go to Step 8.

NO : Repair or replace it. Refer to GROUP 00E, Harness Connector Inspection P.00E-2. Then go to Step 10.

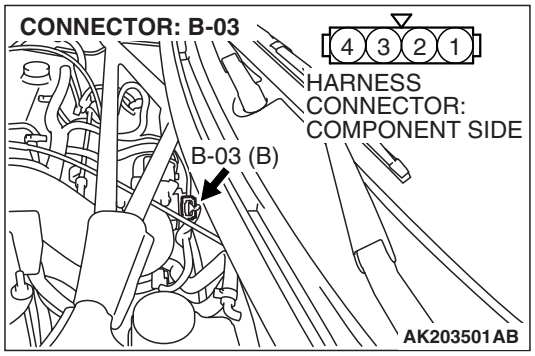

STEP 8. Check for open circuit and short circuit to ground between throttle position sensor connector B-03 (terminal No. 2) and ECM connector C-117 (terminal No. 78).

Q: Is the harness wire in good condition?

YES : Go to Step 9.

NO : Repair it. Then go to Step 10.

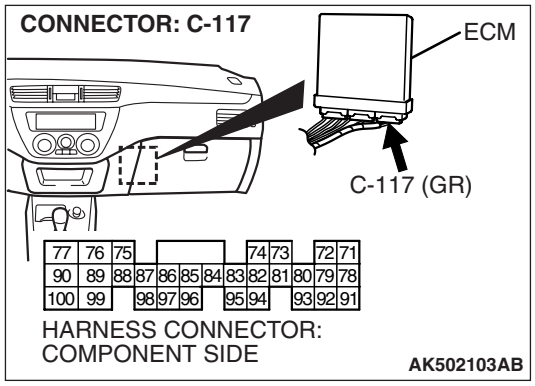

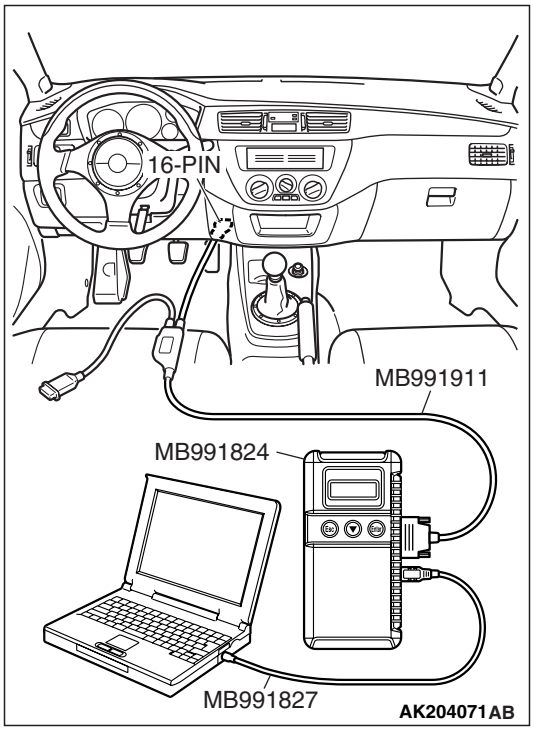

STEP 9. Using scan tool MB991958, check data list item 14: Throttle Position Sensor.

⚠ CAUTION

To prevent damage to scan tool MB991958, always turn the ignition switch to the "LOCK" (OFF) position before connecting or disconnecting scan tool MB991958.

(1) Connect scan tool MB991958 to the data link connector.
(2) Turn the ignition switch to the "ON" position.
(3) Set scan tool MB991958 to the data reading mode for item 14, Throttle Position Sensor.
- With the throttle valve in the idle position, voltage should be between 0.535 and 0.735 volt.
- With the throttle valve in the full-open position, voltage should be between 4.5 and 5.0 volts.

(4) Turn the ignition switch to the "LOCK" (OFF) position.

Q: Is the sensor operating properly?

YES : It can be assumed that this malfunction is intermittent. Refer to GROUP 00, How to Use Troubleshooting/Inspection Service Points –How to Cope with Intermittent Malfunctions P.00-13.

NO : Replace the ECM. Then go to Step 10.

STEP 10. Test the OBD-II drive cycle.

(1) Carry out a test drive with the drive cycle pattern. Refer to GROUP 13A, Diagnostic Function –OBD-II Drive Cycle – Pattern 23 P.13A-12.
(2) Check the diagnostic trouble code (DTC).

Q: Is DTC P0122 set?

YES : Retry the troubleshooting.

NO : The inspection is complete.

DTC P0123: Throttle Position Sensor Circuit High Input

Throttle Position Sensor (TPS) Circuit

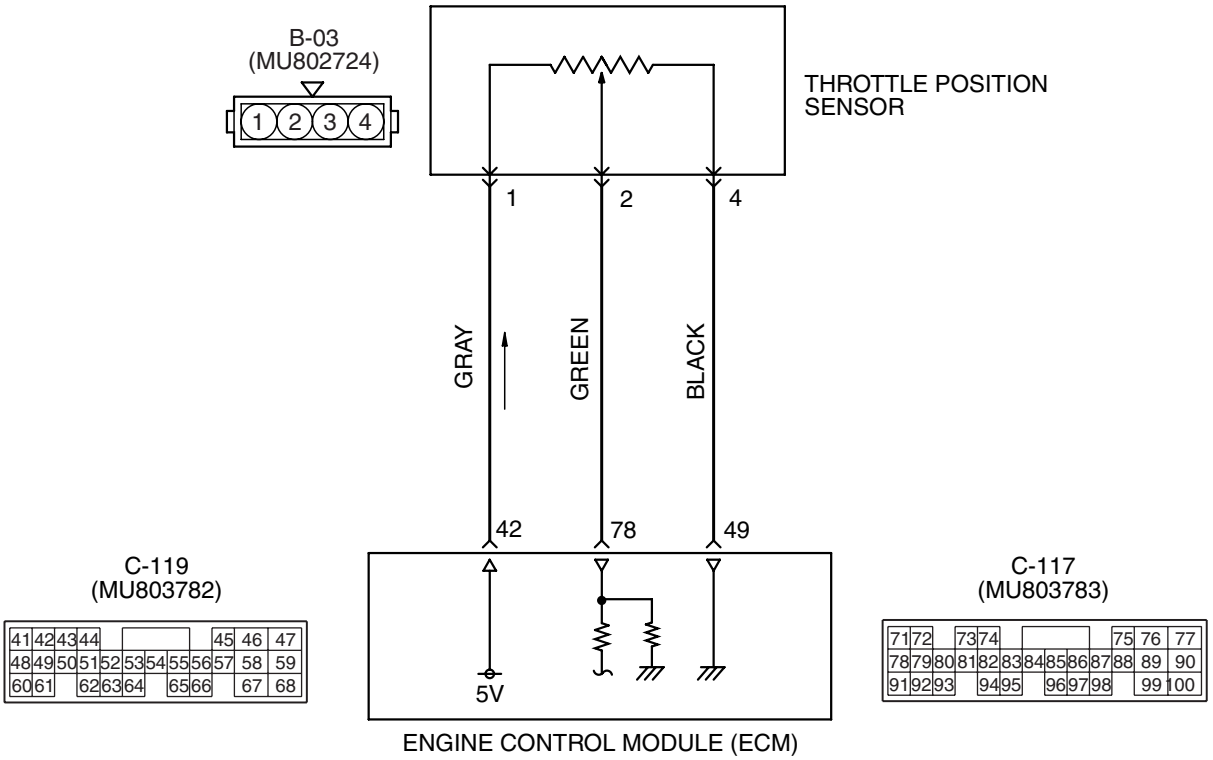

AK502065

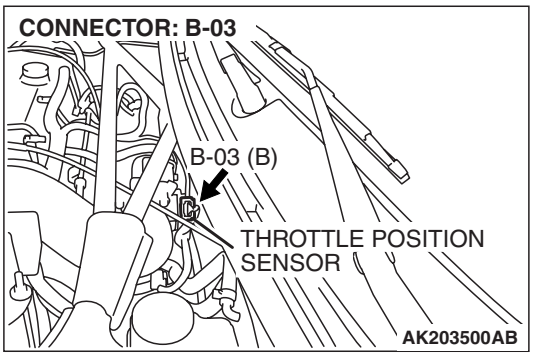

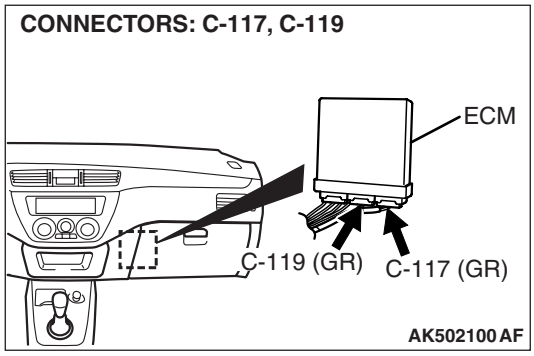

CIRCUIT OPERATION

- A 5-volt power supply is applied on the throttle position sensor power terminal (terminal No. 1) from the ECM (terminal No. 42).
  The ground terminal (terminal No. 4) is grounded with ECM (terminal No. 49).
- When the throttle valve shaft is turned from the idle position to the fully opened position, the resistor between the throttle position sensor output terminal (terminal No. 2) and ground terminal will increase according to the rotation.

TECHNICAL DESCRIPTION

- The throttle position sensor outputs voltage which corresponds to the throttle valve opening angle.
- The ECM checks whether the voltage is within a specified range. In addition, it checks that the voltage output does not become too high while the engine is at idle.

DESCRIPTIONS OF MONITOR METHODS

- Throttle position sensor output voltage is out of specified range.

TSB Revision

MONITOR EXECUTION

- Continuous

MONITOR EXECUTION CONDITIONS (Other monitor and Sensor)

Other Monitor (There is no temporary DTC stored in memory for the item monitored below)

- Not applicable

Sensor (The sensor below is determined to be normal)

- Not applicable

DTC SET CONDITIONS

Logic Flow Chart

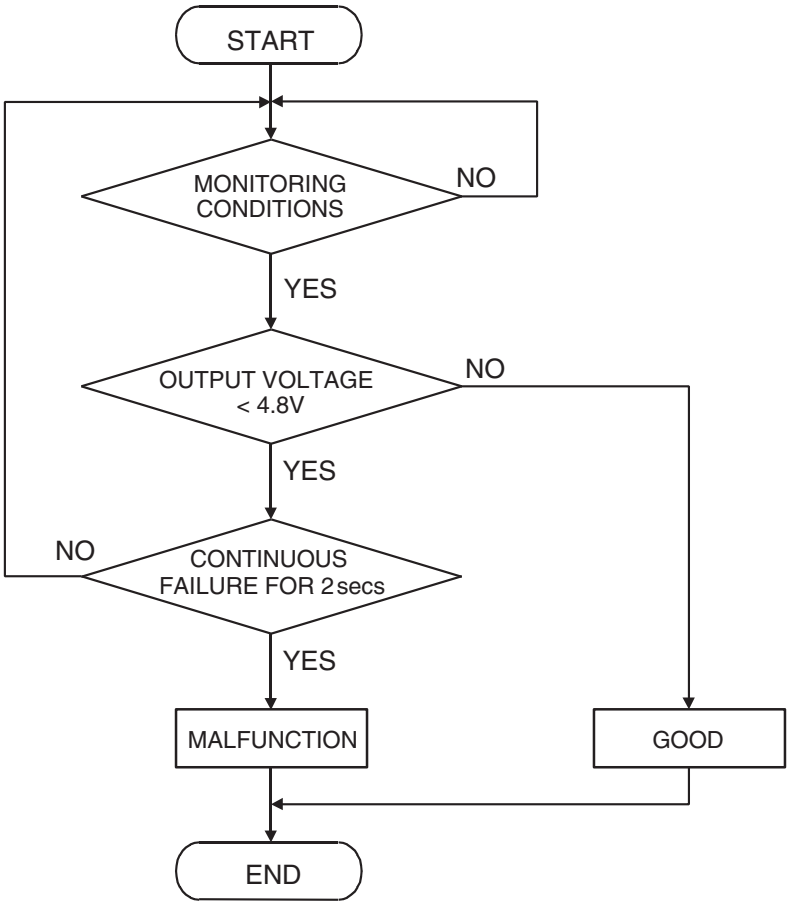

AK401736

Check Conditions

- 2 seconds or more have passed since the engine starting sequence was completed.
- Engine speed is lower than 4,500 r/min.
- Volumetric efficiency is lower than 60 percent.

Judgement Criterion

- TPS output voltage has continued to be 4.8 volts or higher for 2 seconds.

OBD-II DRIVE CYCLE PATTERN

Refer to Diagnostic Function –OBD-II Drive Cycle – Pattern 23 P.13A-12.

TSB Revision

TROUBLESHOOTING HINTS (The most likely causes for this code to be set are:)

- Throttle position sensor failed or incorrectly adjusted.
- Open throttle position sensor circuit, harness damage, or connector damage.
- ECM failed.

DIAGNOSIS

Required Special Tools:

- MB991958: Scan Tool (M.U.T.-III Sub Assembly)
  - MB991824: V.C.I.
  - MB991827: USB Cable
  - MB991911: Main Harness B

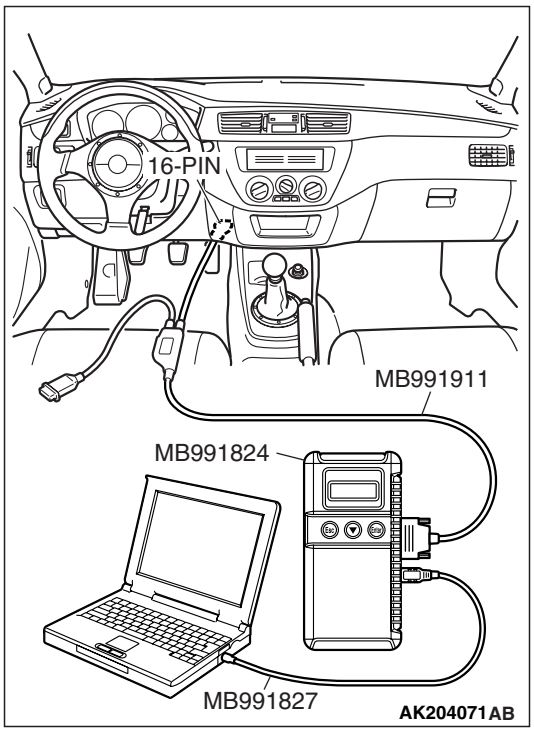

STEP 1. Using scan tool MB991958, check data list item 14: Throttle Position Sensor.

⚠ CAUTION

To prevent damage to scan tool MB991958, always turn the ignition switch to the "LOCK" (OFF) position before connecting or disconnecting scan tool MB991958.

(1) Connect scan tool MB991958 to the data link connector.
(2) Turn the ignition switch to the "ON" position.
(3) Set scan tool MB991958 to the data reading mode for item 14, Throttle Position Sensor.
  - With the throttle valve in the idle position, voltage should be between 0.535 and 0.735 volt.
  - With the throttle valve in the full-open position, voltage should be between 4.5 and 5.0 volts.

(4) Turn the ignition switch to the "LOCK" (OFF) position.

Q: Is the sensor operating properly?

YES : It can be assumed that this malfunction is intermittent. Refer to GROUP 00, How to Use Troubleshooting/Inspection Service Points –How to Cope with Intermittent Malfunctions P.00-13.

NO : Go to Step 2.

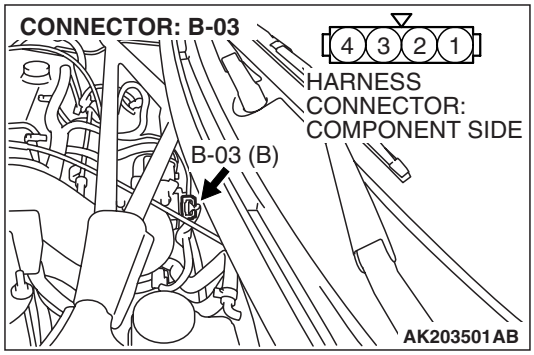

STEP 2. Check harness connector B-03 at throttle position sensor for damage.

Q: Is the harness connector in good condition?

YES : Go to Step 3.

NO : Repair or replace it. Refer to GROUP 00E, Harness Connector Inspection P.00E-2. Then go to Step 8.

STEP 3. Check for continuity at throttle position sensor harness side connector B-03.

(1) Disconnect connector B-03 and measure at the harness side.

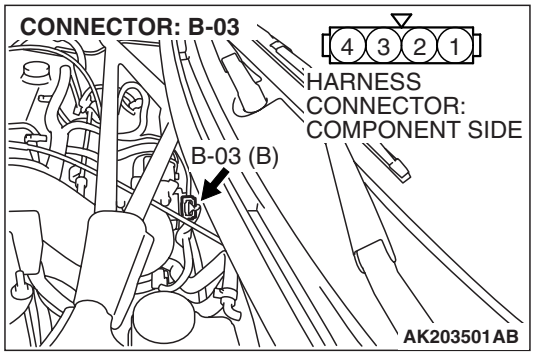

(2) Measure the continuity between terminal No. 4 and ground.
- Should be less than 2 ohms.

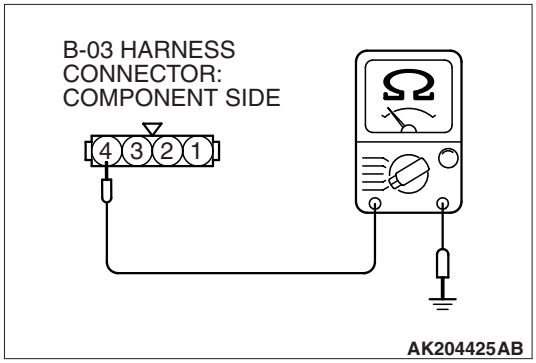

Q: Does continuity exist?

YES : Go to Step 6.

NO : Go to Step 4.

STEP 4. Check harness connector C-119 at ECM for damage.

Q: Is the harness connector in good condition?

YES : Go to Step 5.

NO : Repair or replace it. Refer to GROUP 00E, Harness Connector Inspection P.00E-2. Then go to Step 8.

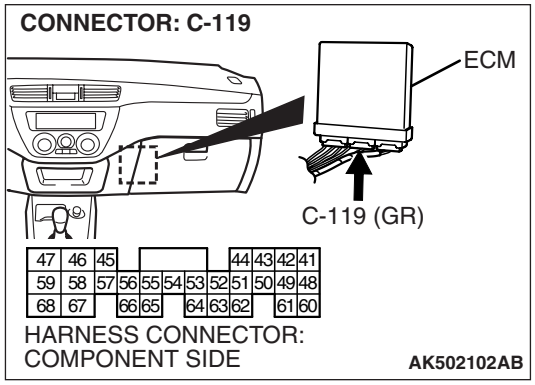

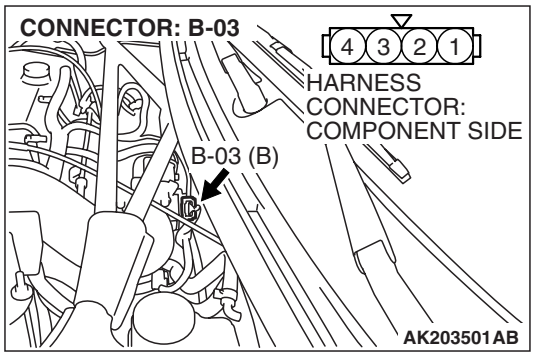

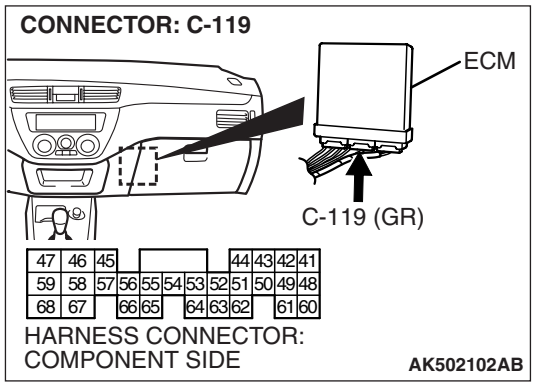

STEP 5. Check for open circuit and harness damage between throttle position sensor connector B-03 (terminal No. 4) and ECM connector C-119 (terminal No. 49).

Q: Is the harness wire in good condition?

YES : Replace the ECM. Then go to Step 8.

NO : Repair it. Then go to Step 8.

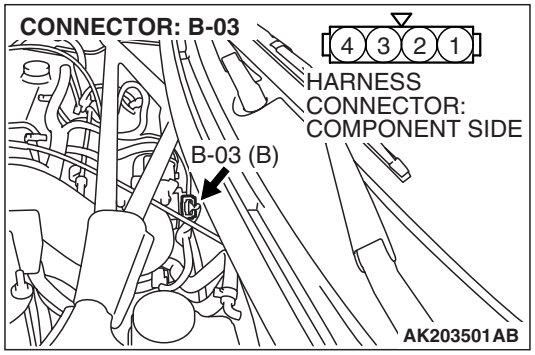

STEP 6. Check the throttle position sensor.

(1) Disconnect connector B-03.

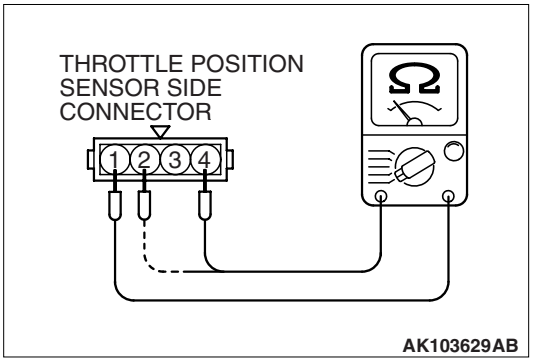

(2) Measure the resistance between throttle position sensor side connector terminal No. 1 and No. 4.

Standard value: 3.5 – 6.5 kΩ

(3) Measure resistance between the throttle position sensor side connector terminal No. 1 and No. 2.

(4) Move the throttle valve from the idle position to the full-open position.

- Resistance should change smoothly in proportion to the opening angle of the throttle valve.

Q: Is the measured resistance normal?

YES : Go to Step 7.

NO : Replace the throttle position sensor. Refer to GROUP 13A, Throttle Body Assembly –Disassembly and Assembly P.13A-884, Throttle Body. Then go to Step 8.

STEP 7. Using scan tool MB991958, check data list item 14: Throttle Position Sensor.

⚠ CAUTION

To prevent damage to scan tool MB991958, always turn the ignition switch to the "LOCK" (OFF) position before connecting or disconnecting scan tool MB991958.

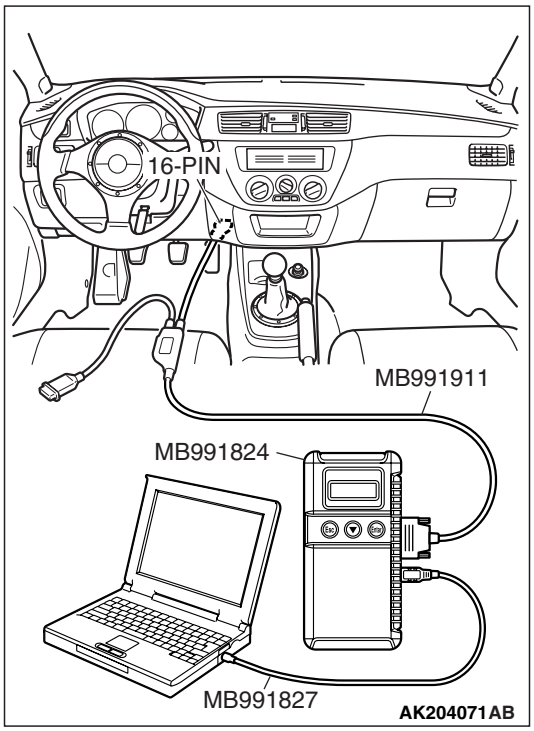

(1) Connect scan tool MB991958 to the data link connector.

(2) Turn the ignition switch to the "ON" position.

(3) Set scan tool MB991958 to the data reading mode for item 14, Throttle Position Sensor.

- With the throttle valve in the idle position, voltage should be between 0.535 and 0.735 volt.
- With the throttle valve in the full-open position, voltage should be between 4.5 and 5.0 volts.

(4) Turn the ignition switch to the "LOCK" (OFF) position.

Q: Is the sensor operating properly?

YES : It can be assumed that this malfunction is intermittent. Refer to GROUP 00, How to Use Troubleshooting/Inspection Service Points –How to Cope with Intermittent Malfunctions P.00-13.

NO : Replace the ECM. Then go to Step 8.

STEP 8. Test the OBD-II drive cycle.

(1) Carry out a test drive with the drive cycle pattern. Refer to GROUP 13A, Diagnostic Function –OBD-II Drive Cycle – Pattern 23 P.13A-12.

(2) Check the diagnostic trouble code (DTC).

Q: Is DTC P0123 set?

YES : Retry the troubleshooting.

NO : The inspection is complete.

DTC P0125: Insufficient Coolant Temperature for Closed Loop Fuel Control

Enging Coolant Temperature Sensor Circuit

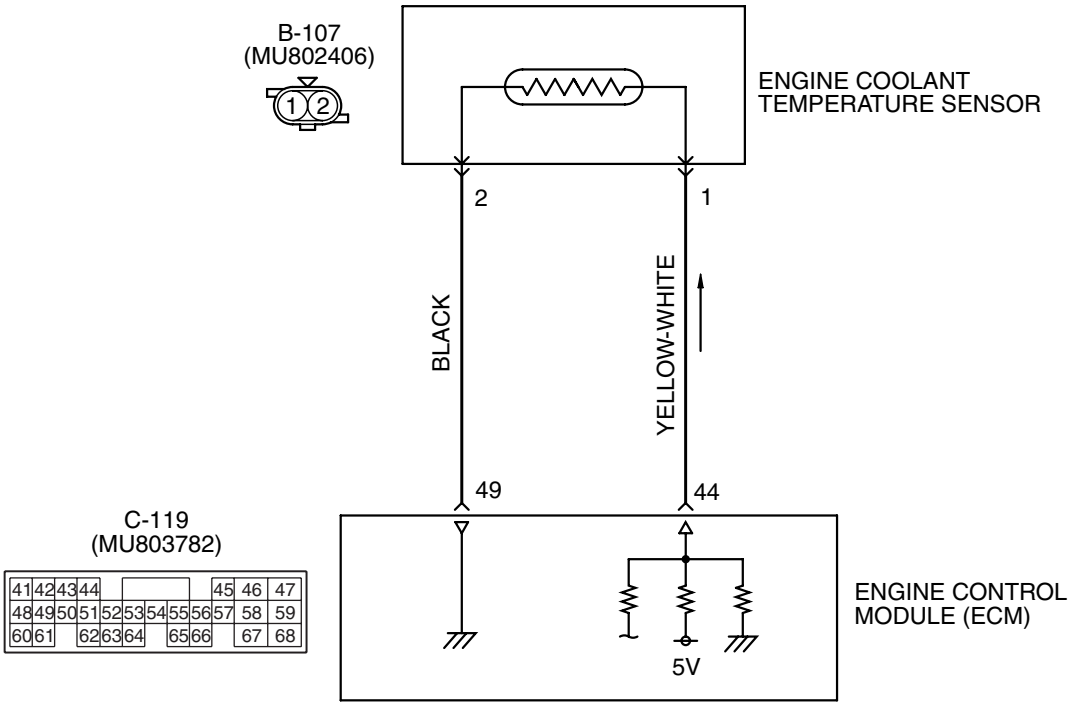

AK502064

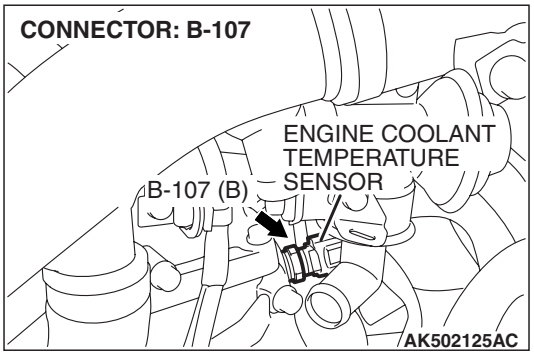

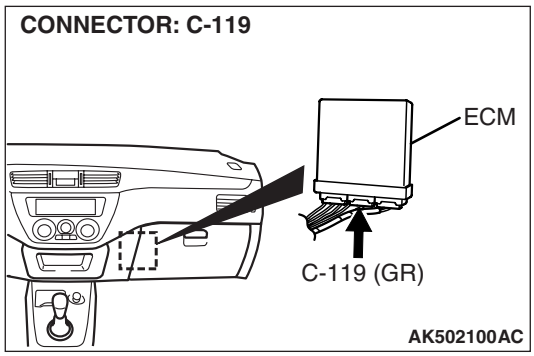

TSB Revision

CIRCUIT OPERATION

- 5-volt voltage is applied to the engine coolant temperature sensor output terminal (terminal No. 1) from the ECM (terminal No. 44) via the resistor in the ECM. The ground terminal (terminal No. 2) is grounded with ECM (terminal No. 49).
- The engine coolant temperature sensor is a negative temperature coefficient type of resistor. It has the characteristic that when the engine coolant temperature rises the resistance decreases.
- The engine coolant temperature sensor output voltage increases when the resistance increases and decreases when the resistance decreases.

TECHNICAL DESCRIPTION

- The engine coolant temperature sensor converts the engine coolant temperature to a voltage and outputs it.
- The ECM checks whether this voltage is within a specified range.

DESCRIPTIONS OF MONITOR METHODS

- Engine coolant temperature sensor output voltage drops from over 40° C (104° F) to under 40° C (104° F) and keeps under 40° C (104° F) for 5 minutes.
- Engine coolant temperature sensor output voltage does not reach close loop enable temperature within specified period when engine coolant temperature sensor output voltage at engine start is under 7° C (45° F).

MONITOR EXECUTION

- Continuous

MONITOR EXECUTION CONDITIONS (Other monitor and Sensor)

Other Monitor (There is no temporary DTC stored in memory for the item monitored below)

- Not applicable

Sensor (The sensor below is determined to be normal)

- Volume airflow sensor
- Engine coolant temperature sensor
- Intake air temperature sensor

DTC SET CONDITIONS <Range/Performance problem-low input (time to reach closed loop temperature) >

Logic Flow Chart

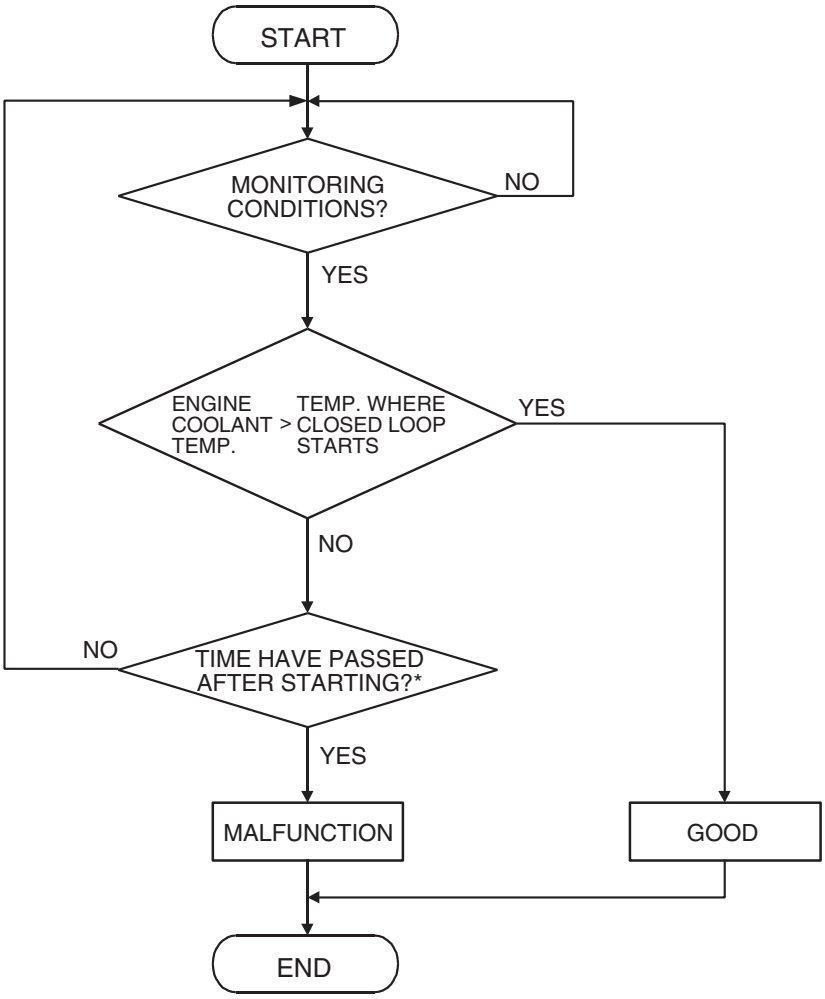

*: SEE DTC SET CONDITIONS-SET CONDITIONS, JUDGMENT CRITERIA

AK301432

Check Conditions, Judgement Criteria

- About 60 – 300 seconds have passed for the engine coolant temperature to rise to about 7° C (45° F) after starting sequence was completed.
- However, time is not counted when fuel is shut off.

DTC SET CONDITIONS <Range/Performance problem-drift>

Logic Flow Chart

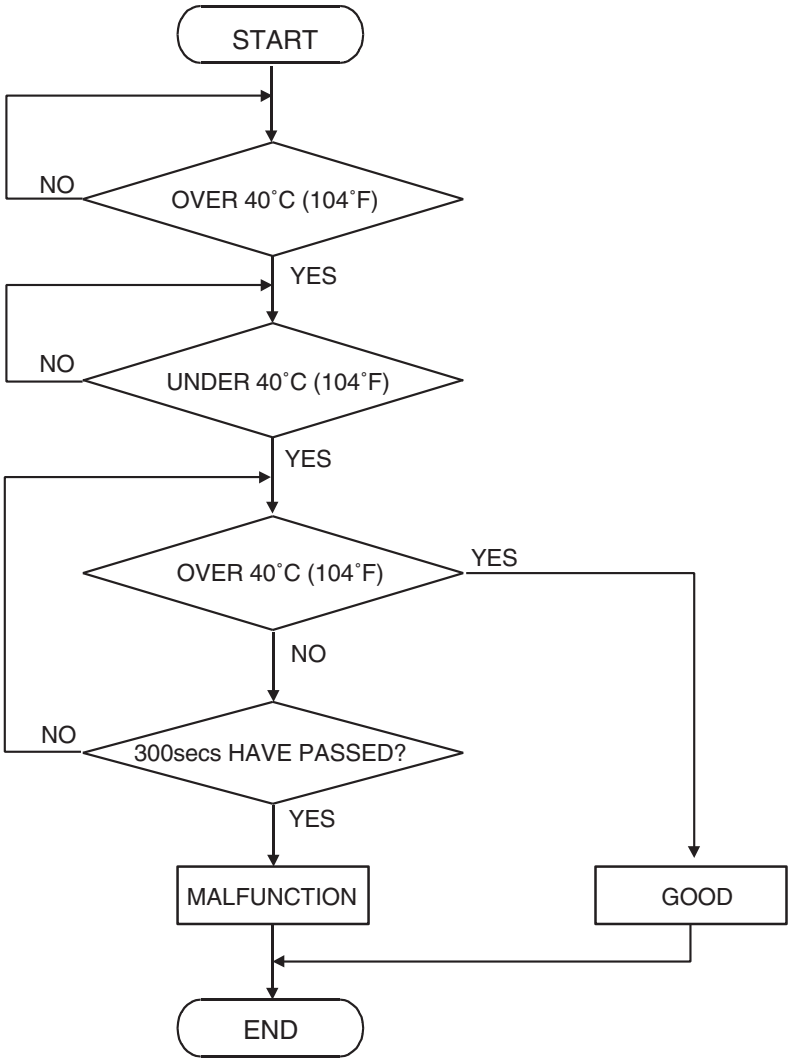

AK305538

Check Conditions, Judgement Criteria

- Engine coolant temperature decreases from higher than 40° C (104° F) to lower than 40° C (104° F).
- Then the engine coolant temperature has continued to be 40° C (104° F) or lower for 5 minutes.

OBD-II DRIVE CYCLE PATTERN

Refer to Diagnostic Function –OBD-II Drive Cycle – Pattern 9 P.13A-12.

TROUBLESHOOTING HINTS (The most likely causes for this code to be set are:)

- Engine coolant temperature sensor failed.
- Harness damage in engine coolant temperature sensor circuit, or connector damage.
- ECM failed.

DIAGNOSIS

Required Special Tools:

- MB991958: Scan Tool (M.U.T.-III Sub Assembly)
  - MB991824: V.C.I.
  - MB991827: USB Cable
  - MB991911: Main Harness B

STEP 1. Using scan tool MB991958, check data list item 21: Engine Coolant Temperature Sensor.

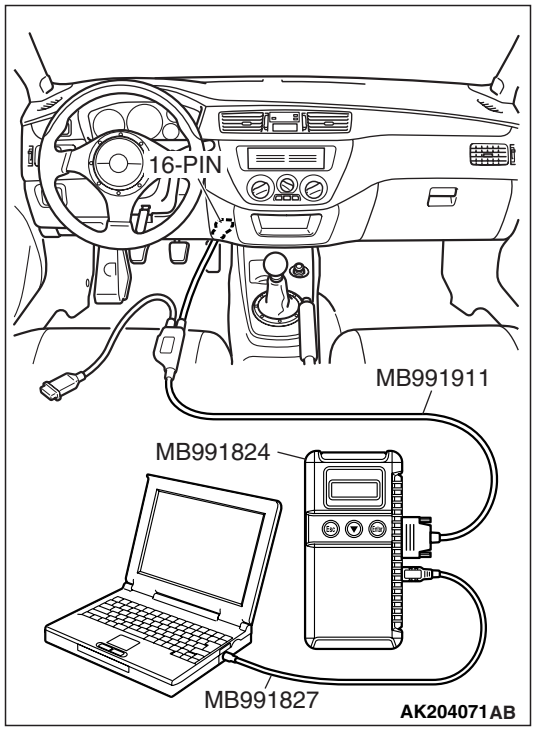

⚠ CAUTION

To prevent damage to scan tool MB991958, always turn the ignition switch to the "LOCK" (OFF) position before connecting or disconnecting scan tool MB991958.

(1) Connect scan tool MB991958 to the data link connector.
(2) Turn the ignition switch to the "ON" position.
(3) Set scan tool MB991958 to the data reading mode for item 21, Engine Coolant Temperature Sensor.
  - The engine coolant temperature and temperature shown with the scan tool should approximately match.

(4) Turn the ignition switch to the "LOCK" (OFF) position.

Q: Is the sensor operating properly?

YES : It can be assumed that this malfunction is intermittent. Refer to GROUP 00, How to Use Troubleshooting/Inspection Service Points –How to Cope with Intermittent Malfunctions P.00-13.

NO : Go to Step 2.

STEP 2. Measure the sensor output voltage at engine coolant temperature sensor connector B-107 by backprobing.

(1) Do not disconnect connector B-107.
(2) Turn the ignition switch to the "ON" position.

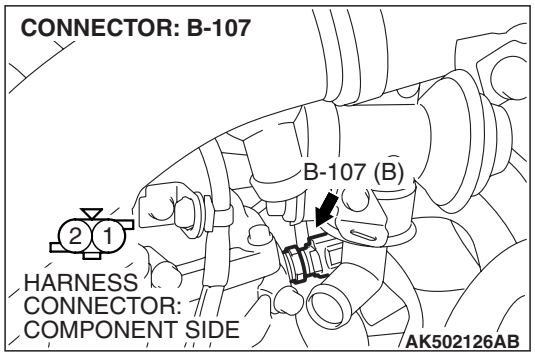

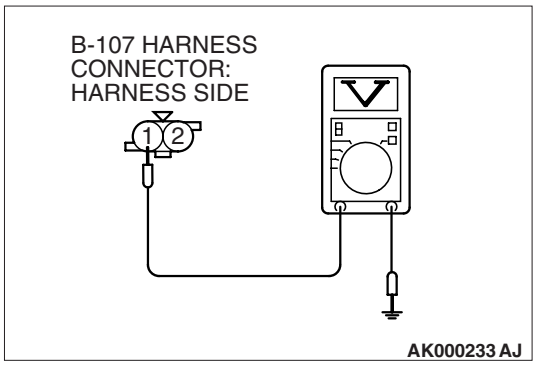

(3) Measure the voltage between terminal No. 1 and ground by backprobing.
- When engine coolant temperature is – 20° C (– 4° F), voltage should be between 3.9 and 4.5 volts.
- When engine coolant temperature is 0° C (32° F), voltage should be between 3.2 and 3.8 volts.
- When engine coolant temperature is 20° C (68° F), voltage should be between 2.3 and 2.9 volts.
- When engine coolant temperature is 40° C (104° F), voltage should be between 1.3 and 1.9 volts.
- When engine coolant temperature is 60° C (140° F), voltage should be between 0.7 and 1.3 volts.
- When engine coolant temperature is 80° C (176° F), voltage should be between 0.3 and 0.9 volt.

(4) Turn the ignition switch to the "LOCK" (OFF) position.

Q: Is the measured voltage within the specified range?

YES : Go to Step 3.
NO : Go to Step 5.

STEP 3. Check harness connector B-107 at the engine coolant temperature sensor for damage.

Q: Is the harness connector in good condition?

YES : Go to Step 4.
NO : Repair or replace it. Refer to GROUP 00E, Harness Connector Inspection P.00E-2. Then go to Step 14.

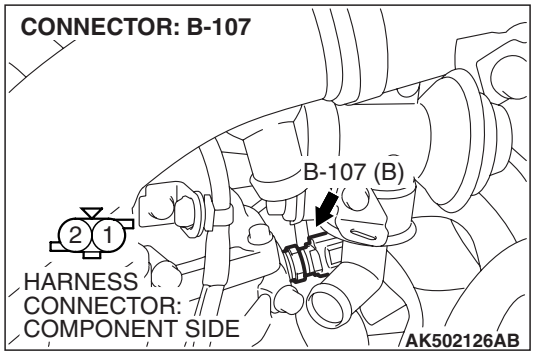

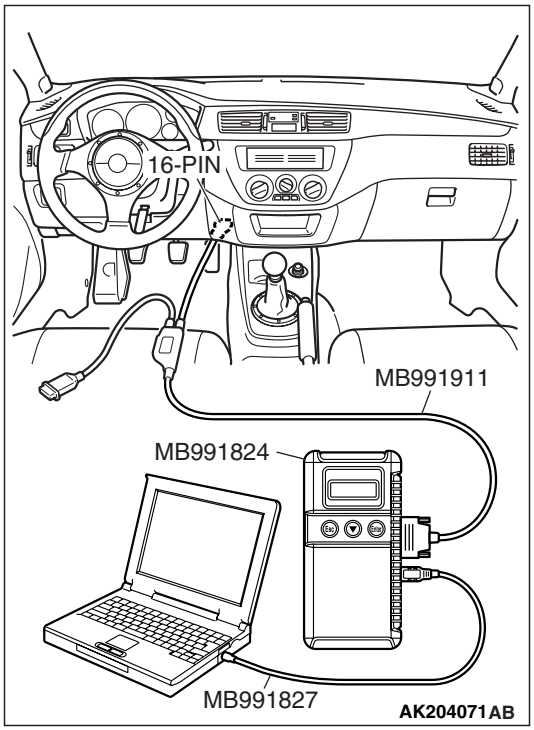

STEP 4. Using scan tool MB991958, check data list item 21: Engine Coolant Temperature Sensor.

⚠ CAUTION

To prevent damage to scan tool MB991958, always turn the ignition switch to the "LOCK" (OFF) position before connecting or disconnecting scan tool MB991958.

(1) Connect scan tool MB991958 to the data link connector.
(2) Turn the ignition switch to the "ON" position.
(3) Set scan tool MB991958 to the data reading mode for item 21, Engine Coolant Temperature Sensor.
- The engine coolant temperature and temperature shown with the scan tool should approximately match.

(4) Turn the ignition switch to the "LOCK" (OFF) position.

Q: Is the sensor operating properly?

YES : It can be assumed that this malfunction is intermittent. Refer to GROUP 00, How to Use Troubleshooting/Inspection Service Points –How to Cope with Intermittent Malfunctions P.00-13.

NO : Replace the ECM. Then go to Step 14.

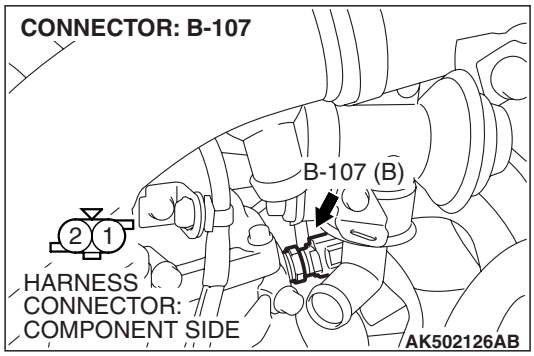

STEP 5. Check harness connector B-107 at engine coolant temperature sensor for damage.

Q: Is the harness connector in good condition?

YES : Go to Step 6.

NO : Repair or replace it. Refer to GROUP 00E, Harness Connector Inspection P.00E-2. Then go to Step 14.

STEP 6. Measure the sensor supply voltage at engine coolant temperature sensor harness side connector B-107.

(1) Disconnect connector B-107 and measure at the harness side.
(2) Turn the ignition switch to the "ON" position.

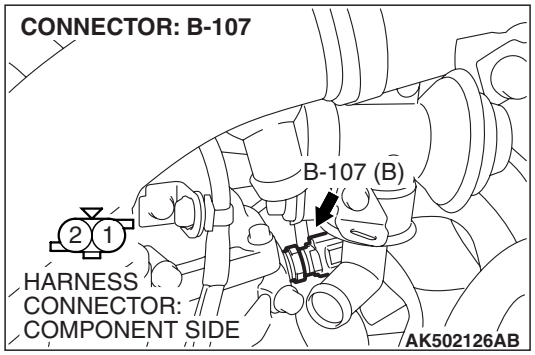

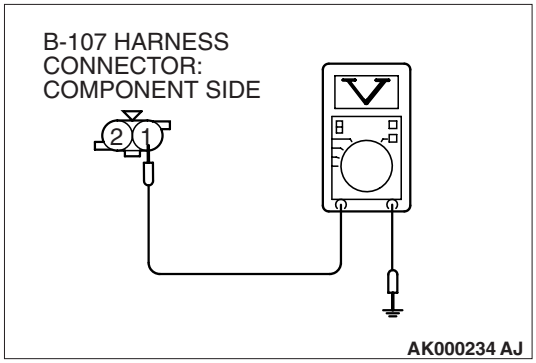

(3) Measure the voltage between terminal No. 1 and ground.
- Voltage should be between 4.5 and 4.9 volts.

(4) Turn the ignition switch to the "LOCK" (OFF) position.

Q: Is the measured voltage between 4.5 and 4.9 volts?

YES : Go to Step 8.
NO : Go to Step 7.

STEP 7. Check harness connector C-119 at ECM for damage.

Q: Is the harness connector in good condition?

YES : Replace the ECM. Then go to Step 14.
NO : Repair or replace it. Refer to GROUP 00E, Harness Connector Inspection P.00E-2. Then go to Step 14.

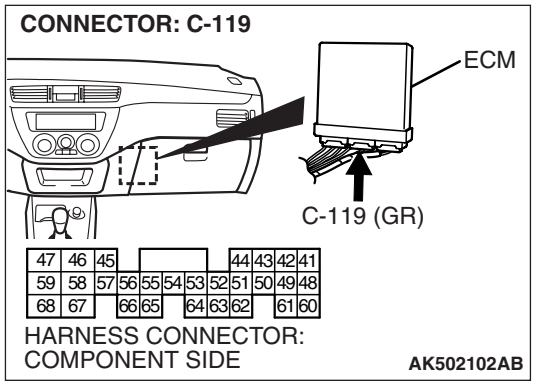

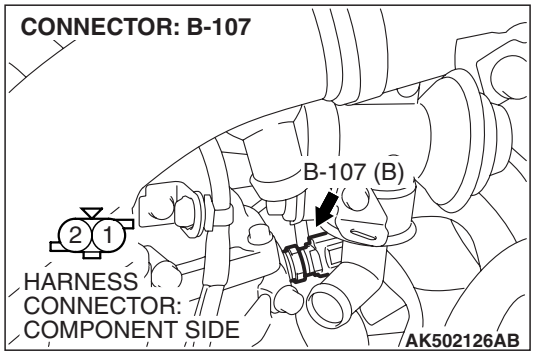

STEP 8. Check for continuity at engine coolant temperature sensor harness side connector B-107.

(1) Disconnect connector B-107 and measure at the harness side.

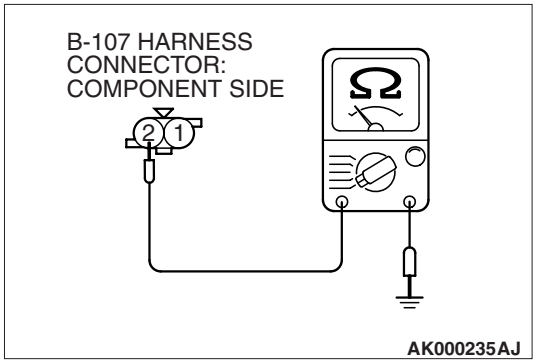

(2) Check for the continuity between terminal No. 2 and ground.
- Should be less than 2 ohms.

Q: Does continuity exist?

YES : Go to Step 11.
NO : Go to Step 9.

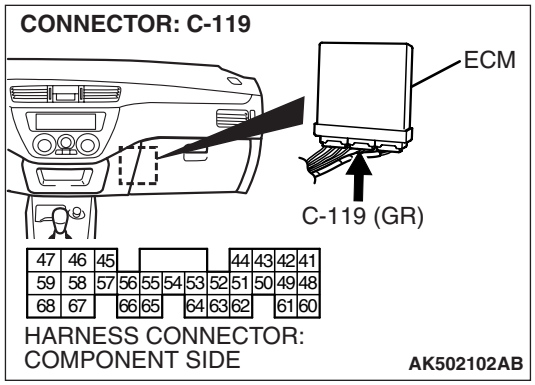

STEP 9. Check harness connector C-119 at ECM for damage.

Q: Is the harness connector in good condition?

YES : Go to Step 10.
NO : Repair or replace it. Refer to GROUP 00E, Harness Connector Inspection P.00E-2. Then go to Step 14.

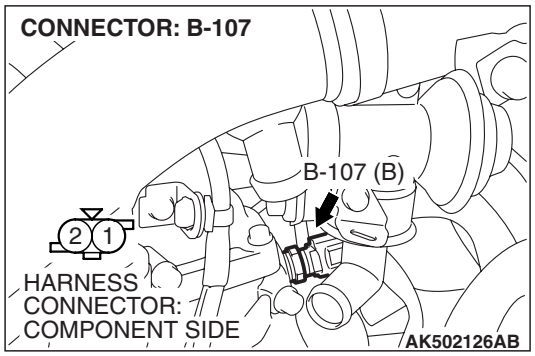

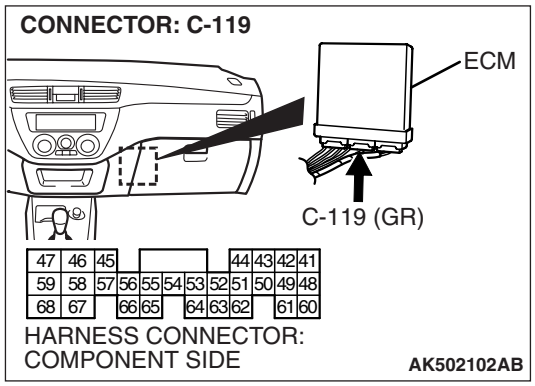

STEP 10. Check for harness damage between engine coolant temperature sensor connector B-107 (terminal No. 2) and ECM connector C-119 (terminal No. 49).

Q: Is the harness wire in good condition?

YES : Replace the ECM. Then go to Step 14.

NO : Repair it. Then go to Step 14.

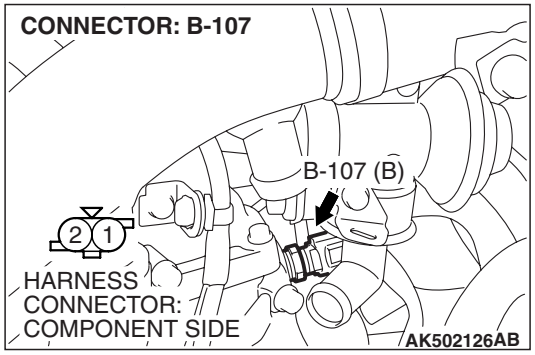

STEP 11. Check the engine coolant temperature sensor.

(1) Disconnect the engine coolant temperature sensor connector B-107.

(2) Remove the engine coolant temperature sensor.

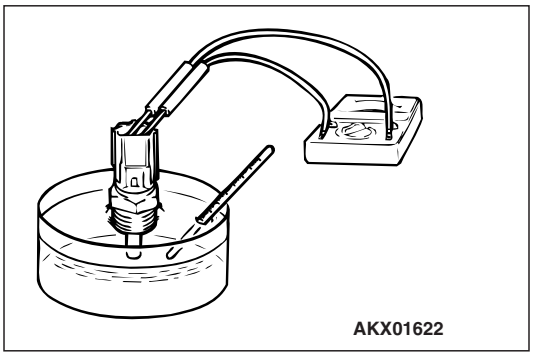

(3) With the temperature sensing portion of engine coolant temperature sensor immersed in hot water, check resistance.

Standard value:
14 – 17 kΩ [at – 20° C (– 4° F)]
5.1 – 6.5 kΩ [at 0° C (32° F)]
2.1 – 2.7 kΩ [at 20° C (68° F)]
0.9 – 1.3 kΩ [at 40° C (104° F)]
0.48 – 0.68 kΩ [at 60° C (140° F)]
0.26 – 0.36 kΩ [at 80° C (176° F)]

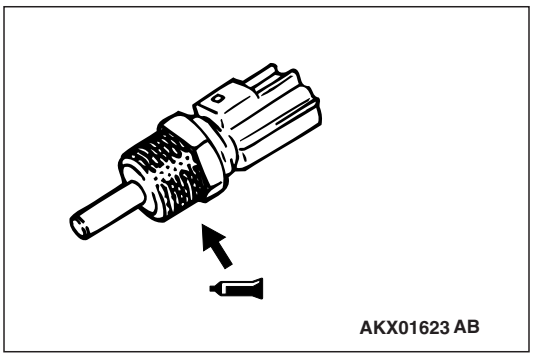

(4) Apply 3M™ AAD part number 8731 or equivalent on the screw section of the engine coolant temperature sensor.

(5) Install the engine coolant temperature sensor, and tighten to the specified torque.

Tightening torque: 29 ±10 N· m (22 ±6 ft-lb)

Q: Is the measured resistance at the standard value?

YES : Go to Step 12.

NO : Replace the engine coolant temperature sensor. Then go to Step 14.

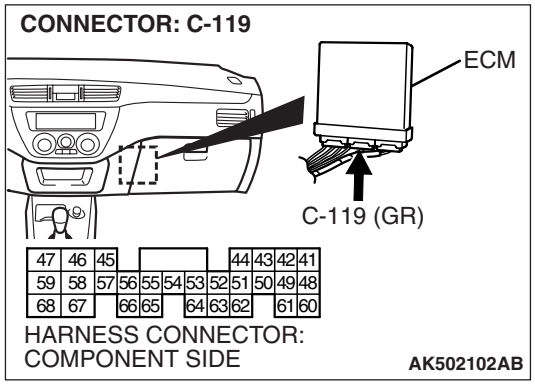

STEP 12. Check harness connector C-119 at ECM for damage.

Q: Is the harness connector in good condition?

YES : Go to Step 13.

NO : Repair or replace it. Refer to GROUP 00E, Harness Connector Inspection P.00E-2. Then go to Step 14.

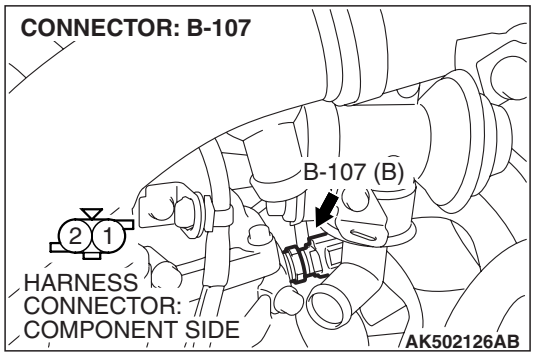

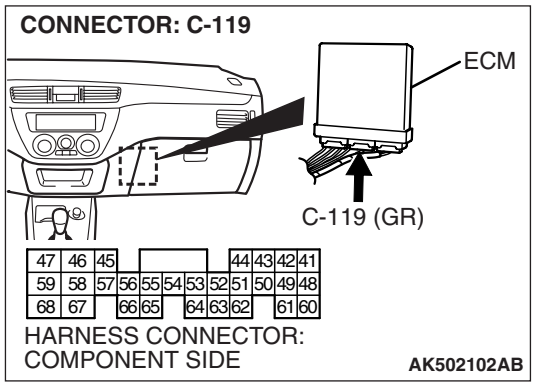

STEP 13. Check for harness damage between engine coolant temperature sensor connector B-107 (terminal No. 1) and ECM connector C-119 (terminal No. 44).

Q: Is the harness wire in good condition?

YES : Replace the ECM. Then go to Step 14.

NO : Repair it. Then go to Step 14.

STEP 14. Test the OBD-II drive cycle.

(1) Carry out a test drive with the drive cycle pattern. Refer to GROUP 13A, Diagnostic Function –OBD-II Drive Cycle – Pattern 9 P.13A-12.

(2) Check the diagnostic trouble code (DTC).

Q: Is DTC P0125 set?

YES : Retry the troubleshooting.

NO : The inspection is complete.

DTC P0128: Coolant Thermostat (Coolant Temperature Below Thermostat Regulating Temperature)

TECHNICAL DESCRIPTION

- The ECM checks the time for the engine coolant temperature to reach the judgment temperature.

DESCRIPTIONS OF MONITOR METHODS

- Engine coolant temperature does not reach 77° C (171° F) within specified period after cold start.

MONITOR EXECUTION

- Once per driving cycle

MONITOR EXECUTION CONDITIONS (Other monitor and Sensor)

Other Monitor (There is no temporary DTC stored in memory for the item monitored below)

- Not applicable

Sensor (The sensor below is determined to be normal)

- Volume airflow sensor
- Engine coolant temperature sensor
- Intake air temperature sensor

DTC SET CONDITIONS

Logic Flow Chart

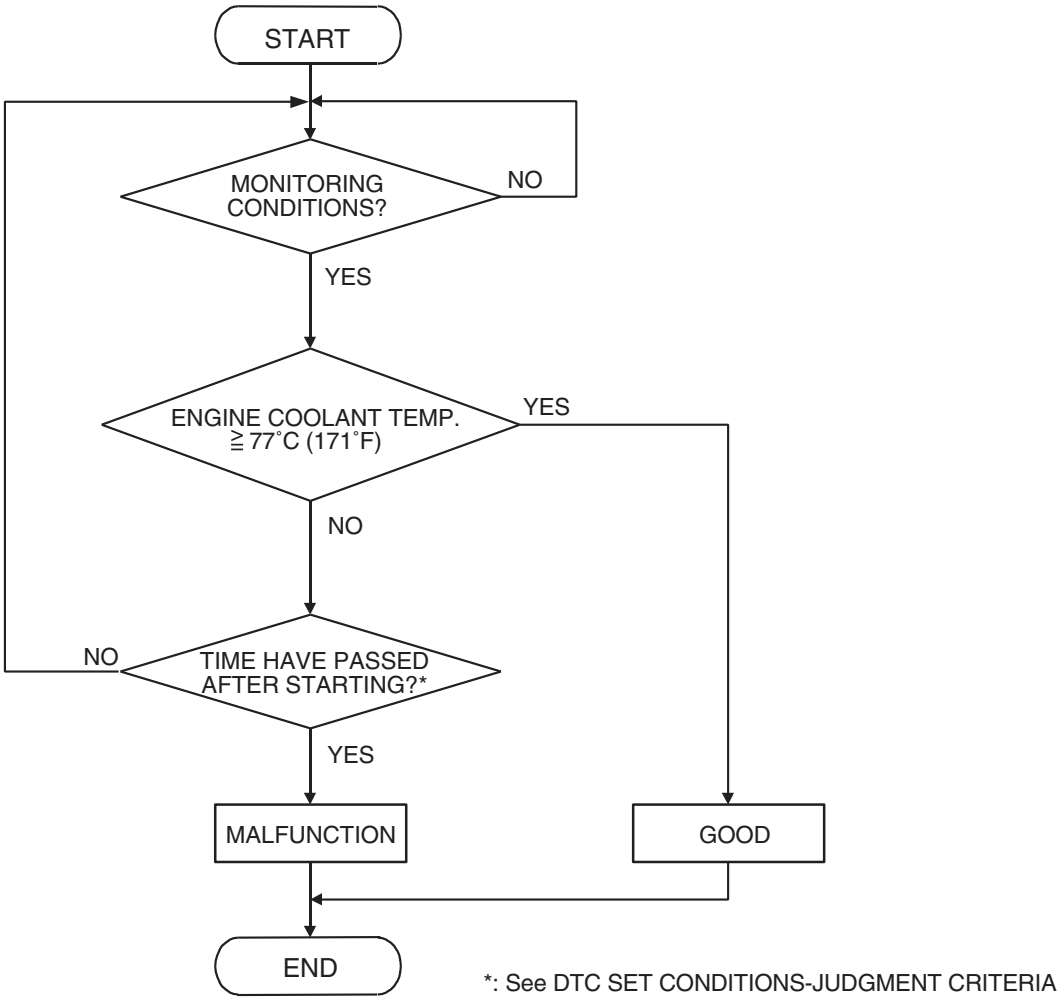

AK305539

TSB Revision

Check Conditions

- Engine coolant temperature is between – 10° C (14° F) and 77° C (171° F) when the engine is started.
- The engine coolant temperature –intake air temperature is 5° C (41° F) or less when the engine is started.
- The intake air temperature when the engine is started –intake air temperature is 5° C (41° F) or less.
- The volume airflow sensors output frequency is in the low frequency (50 –100 Hz or less) state for 400 seconds or less.

Judgement Criterion

- The time for the engine coolant temperature to rise to 77° C (171° F) takes longer than approximately 9 to 14.5 minutes.
- The ECM monitors for this condition once during the drive cycle.

OBD-II DRIVE CYCLE PATTERN

Refer to Diagnostic Function –OBD-II Drive Cycle – Pattern 10 P.13A-12.

TROUBLESHOOTING HINTS (The most likely causes for this code to be set are:)

- The thermostat is faulty.
- ECM failed.

DIAGNOSIS

STEP 1. Check the cooling system.

Refer to GROUP 14, Engine Cooling Diagnosis P.14-3.

Q: Is the cooling system normal?

YES : Replace the ECM. Then go to Step 2.
NO : Repair it. Then go to Step 2.

STEP 2. Test the OBD-II drive cycle.

(1) Carry out test drive with the drive cycle pattern. Refer to Diagnostic Function –OBD-II Drive Cycle –Pattern 10 P.13A-12.
(2) Check the diagnostic trouble code (DTC).

Q: Is DTC P0128 set?

YES : Retry the troubleshooting.
NO : The inspection is complete.

DTC P0130: Heated Oxygen Sensor Circuit <SENSOR 1>

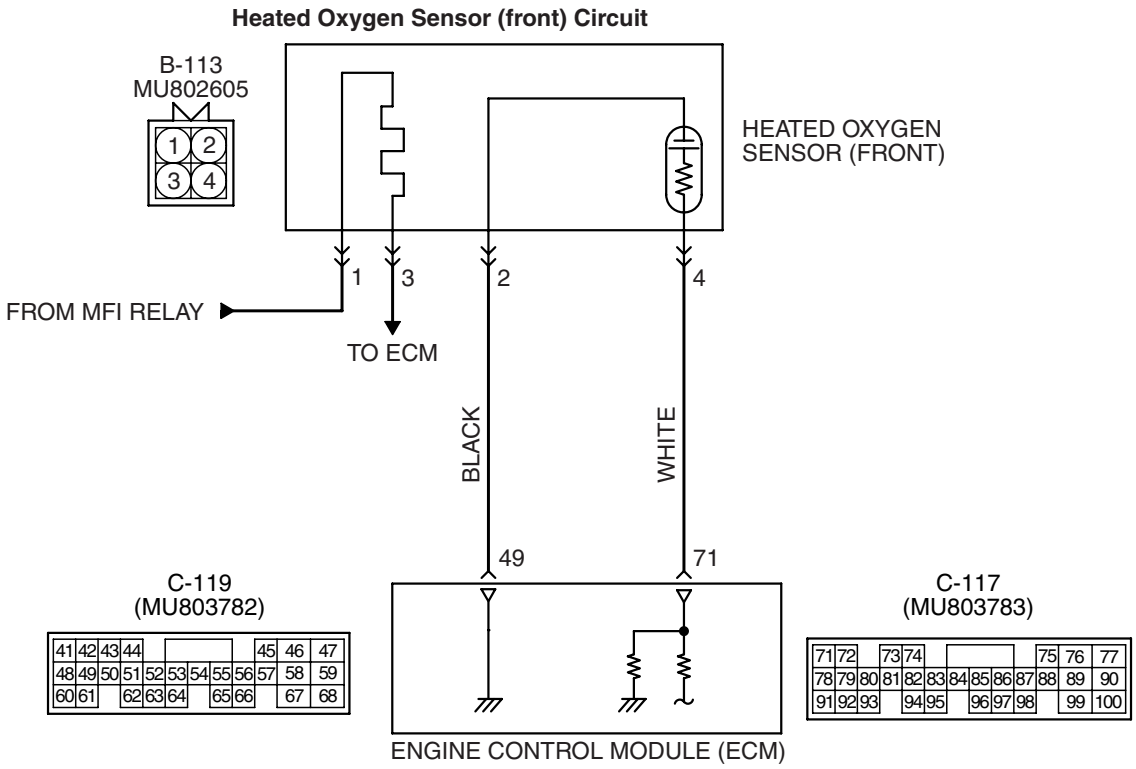

AK502066

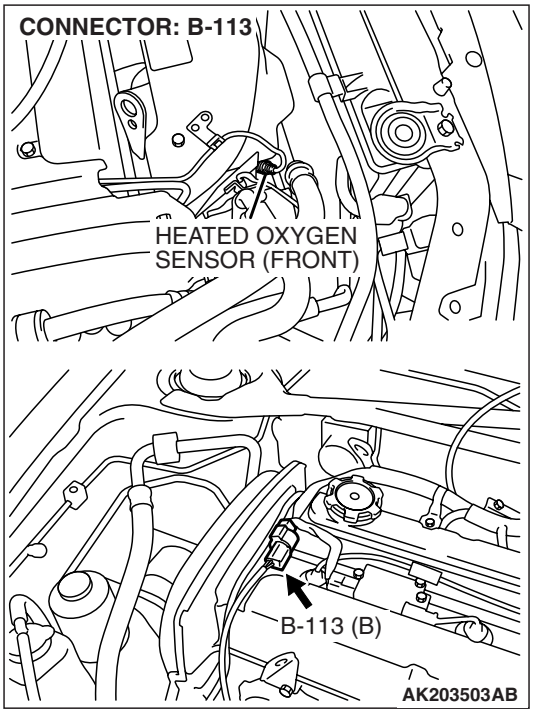

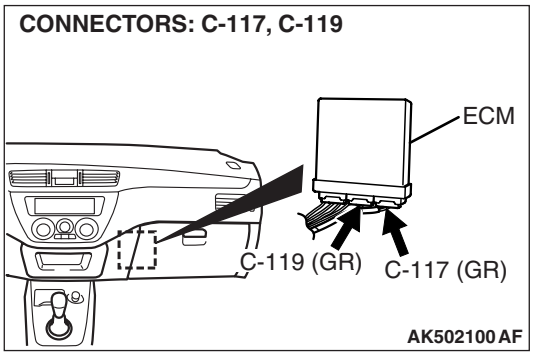

CIRCUIT OPERATION

- A voltage corresponding to the oxygen concentration in the exhaust gas is sent to the ECM (terminal No. 71) from the output terminal (terminal No. 4) of the heated oxygen sensor (front).
- Terminal No. 2 of the heated oxygen sensor (front) is grounded with ECM (terminal No. 49).

TECHNICAL DESCRIPTION

- The heated oxygen sensor (front) detects the concentration of oxygen in the exhaust gas; it converts those data to voltage, and inputs the resulting signals to the ECM.
- When the heated oxygen sensor (front) begins to deteriorate, the heated oxygen sensor signal response becomes poor.
- The ECM forcibly varies the air/fuel mixture to make it leaner and richer, and checks the response speed of the heated oxygen sensor (front). In addition, the ECM also checks for an open circuit in the heated oxygen sensor (front) output line.

DESCRIPTIONS OF MONITOR METHODS

- Heated oxygen sensor (front) circuit is switched to 5 volts intentionally when oxygen sensor output is low, and detects the malfunction if the output voltage changes to equal or greater than 4.5 volts. The above procedure is repeated when oxygen sensor is inactive.

MONITOR EXECUTION

- Continuous

MONITOR EXECUTION CONDITIONS (Other monitor and Sensor)

Other Monitor (There is no temporary DTC stored in memory for the item monitored below)

- Heated oxygen sensor heater (front) monitor
- Misfire monitor
- Fuel system monitor

Sensor (The sensor below is determined to be normal)

- Volume airflow sensor
- Engine coolant temperature sensor
- Intake air temperature sensor
- Barometric pressure sensor
- Throttle position sensor
- Accelerator position sensor

DTC SET CONDITIONS

Logic Flow Chart

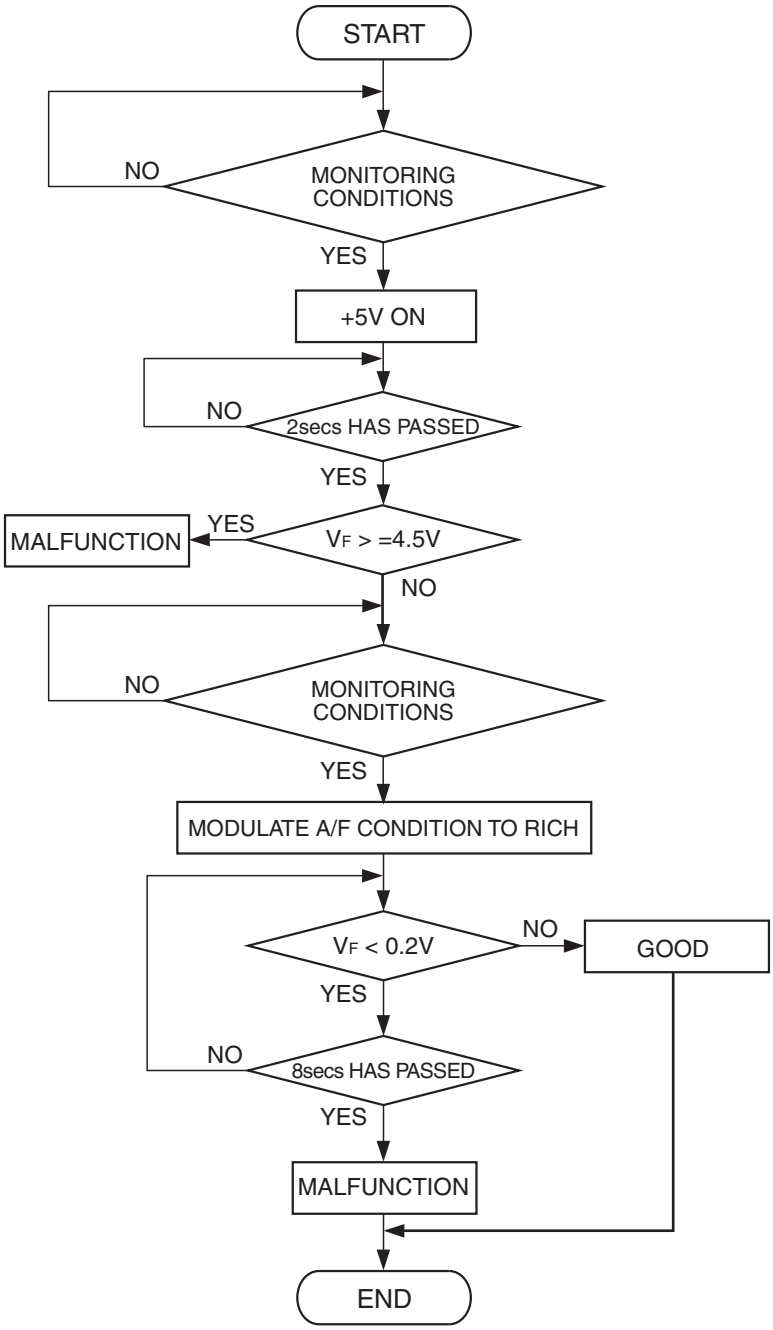

AK401409

Check Conditions

- 3 minutes or more have passed since the engine starting sequence was completed.
- Heated oxygen sensor (front) signal voltage has continued to be 0.2 volt or lower.
- Engine coolant temperature is higher than 76° C (169° F).
- Engine speed is higher than 1,200 r/min.
- Volumetric efficiency is higher than 25 percent.
- Monitoring time: 7 seconds.

TSB Revision

Judgment Criterion

- Input voltage supplied to the ECM interface circuit is higher than 4.5 volts when 5 volts is applied to the heated oxygen sensor (front) output line via a resistor.

OBD-II DRIVE CYCLE PATTERN

Refer to Diagnostic Function –OBD-II Drive Cycle – Pattern 11 P.13A-12.

TROUBLESHOOTING HINTS (The most likely causes for this code to be set are:)

- Heated oxygen sensor (front) deteriorated.
- Open or shorted circuit in heated oxygen sensor (front) output line or harness damage.
- Open circuit in heated oxygen sensor (front) ground line or harness damage.
- ECM failed.

DIAGNOSIS

Required Special Tools:

- MB991958: Scan Tool (M.U.T.-III Sub Assembly)
  - MB991824: V.C.I.
  - MB991827: USB Cable
  - MB991911: Main Harness B
- MD998464: Test Harness

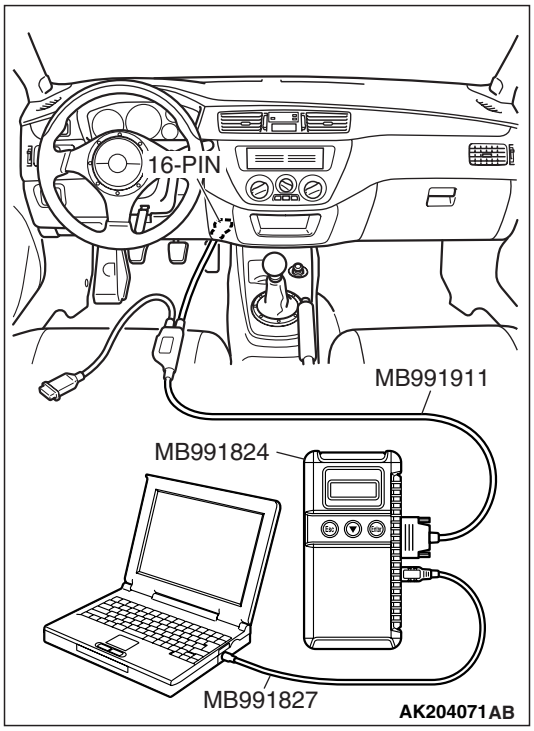

STEP 1. Using scan tool MB991958, check data list item 11: Heated Oxygen Sensor (front).

⚠ CAUTION

To prevent damage to scan tool MB991958, always turn the ignition switch to the "LOCK" (OFF) position before connecting or disconnecting scan tool MB991958.

(1) Connect scan tool MB991958 to the data link connector.
(2) Start the engine and run at idle.
(3) Set scan tool MB991958 to the data reading mode for item 11, Heated Oxygen Sensor (front).
  - Warm up the engine. When the engine is revved, the output voltage should be 0.6 to 1.0 volt.
  - Warm up the engine. When the engine is idling, the output voltage should repeat 0.4 volt and 0.6 to 1.0 volt alternately.
(4) Turn the ignition switch to the "LOCK" (OFF) position.

Q: Is the sensor operating properly?

YES : It can be assumed that this malfunction is intermittent. Refer to GROUP 00, How to Use Troubleshooting/Inspection Service Points –How to Cope with Intermittent Malfunctions P.00-13.

NO : Go to Step 2.

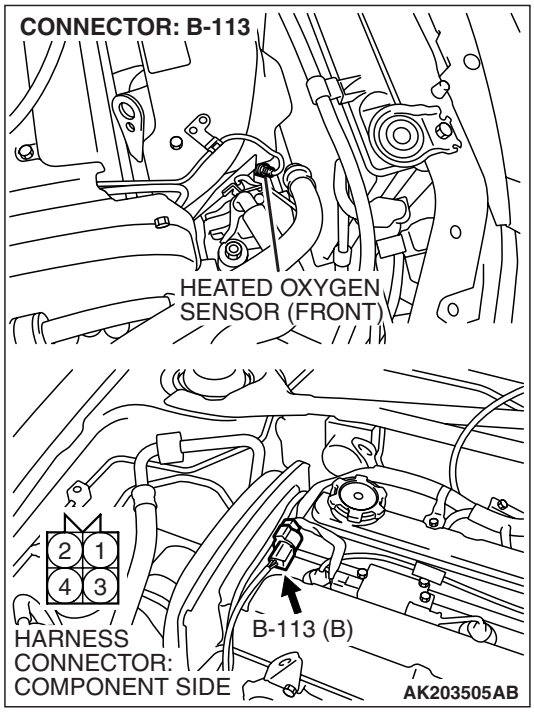

STEP 2. Measure the sensor output voltage at heated oxygen sensor (front) connector B-113 by backprobing.

(1) Do not disconnect connector B-113.

(2) Start the engine and run at idle.

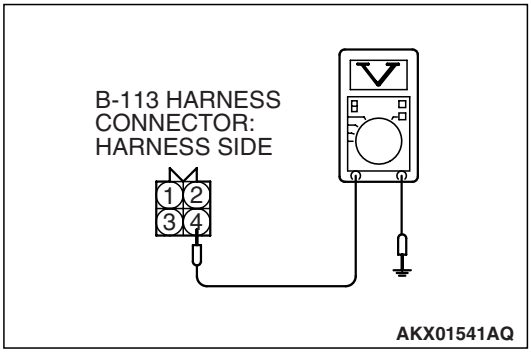

(3) Measure the voltage between terminal No. 4 and ground by backprobing.
- Warm up the engine. When the engine is 2,500 r/min, the output voltage should repeat 0 to 0.8 volt alternately.

(4) Turn the ignition switch to the "LOCK" (OFF) position.

Q: Is the measured voltage within the specified range?

YES : Go to Step 3.

NO : Go to Step 7.

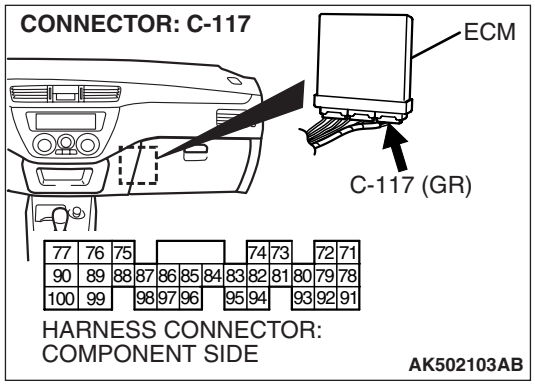

STEP 3. Measure the sensor output voltage at ECM connector C-117 by backprobing.

(1) Do not disconnect connector C-117.
(2) Start the engine and run at idle.

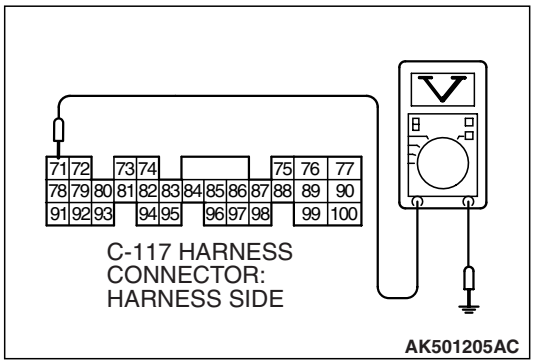

(3) Measure the voltage between terminal No. 71 and ground by backprobing.
   - Warm up the engine. When the engine is 2,500 r/min, the output voltage should repeat 0 to 0.8 volt alternately.
(4) Turn the ignition switch to the "LOCK" (OFF) position.

Q: Is the measured voltage within the specified range?

YES : Go to Step 4.
NO : Go to Step 6.

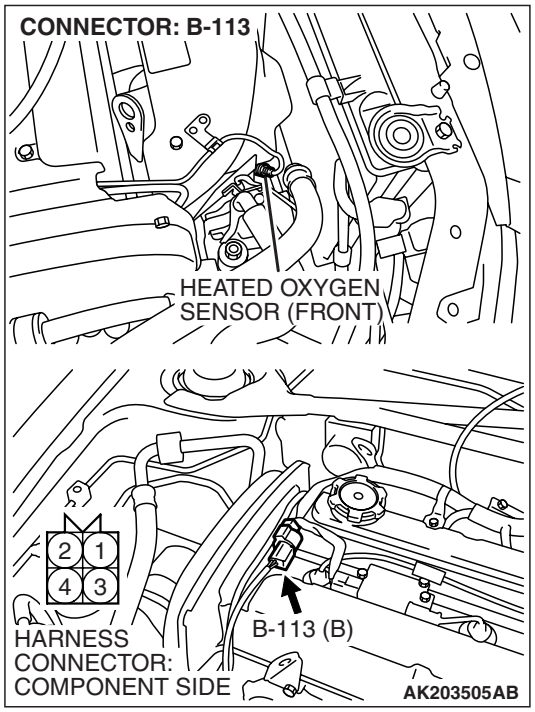

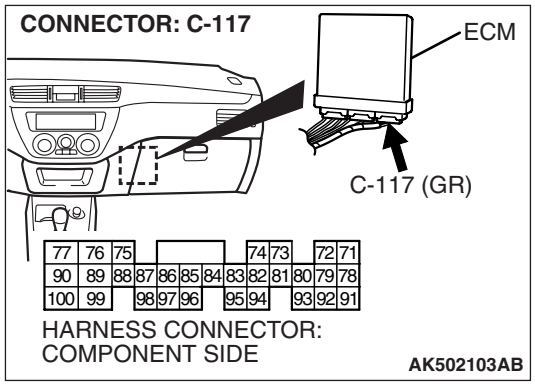

STEP 4. Check harness connector B-113 at heated oxygen sensor (front) and connector C-117 at ECM for damage.

Q: Is the harness connector in good condition?

YES : Go to Step 5.

NO : Repair or replace it. Refer to GROUP 00E, Harness Connector Inspection P.00E-2. Then go to Step 15.

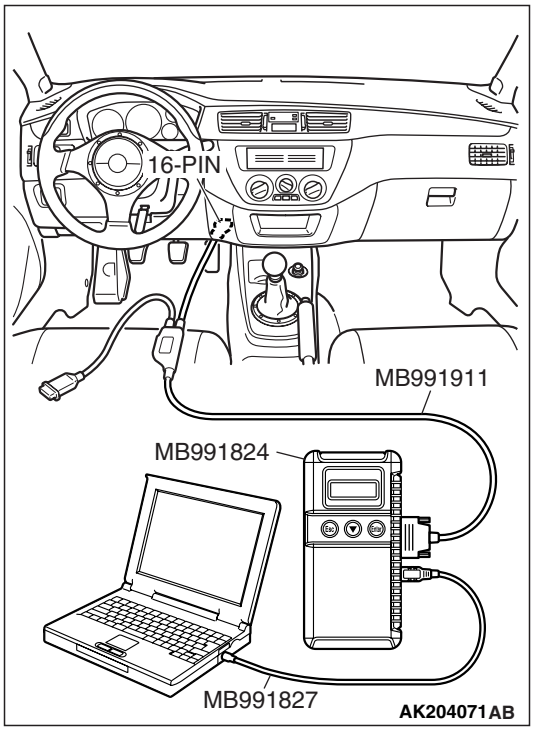

STEP 5. Using scan tool MB991958, check data list item 11: Heated Oxygen Sensor (front).

⚠ CAUTION

To prevent damage to scan tool MB991958, always turn the ignition switch to the "LOCK" (OFF) position before connecting or disconnecting scan tool MB991958.

(1) Connect scan tool MB991958 to the data link connector.
(2) Start the engine and run at idle.
(3) Set scan tool MB991958 to the data reading mode for item 11, Heated Oxygen Sensor (front).
- Warm up the engine. When the engine is revved, the output voltage should be 0.6 to 1.0 volt.
- Warm up the engine. When the engine is idling, the output voltage should repeat 0.4 volt and 0.6 to 1.0 volt alternately.

(4) Turn the ignition switch to the "LOCK" (OFF) position.

Q: Is the sensor operating properly?

YES : It can be assumed that this malfunction is intermittent. Refer to GROUP 00, How to Use Troubleshooting/Inspection Service Points –How to Cope with Intermittent Malfunctions P.00-13.

NO : Replace the ECM. Then go to Step 15.

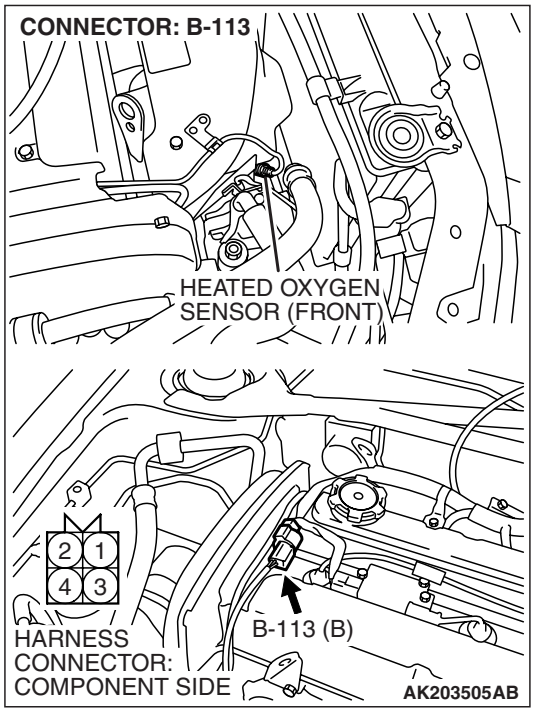

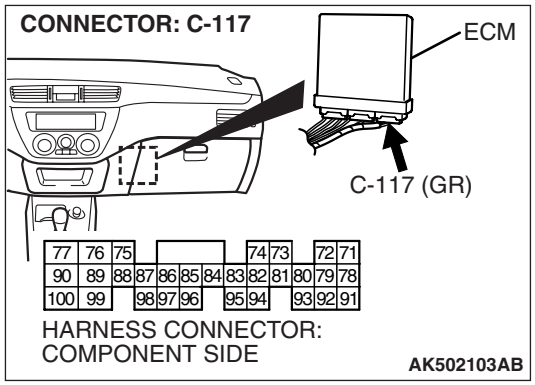

STEP 6. Check harness connector B-113 at heated oxygen sensor (front) and connector C-117 at ECM for damage.

Q: Is the harness connector in good condition?

YES : Repair harness wire between heated oxygen sensor (front) connector B-113 (terminal No. 4) and ECM connector C-117 (terminal No. 71) because of open circuit or harness damage. Then go to Step 15.

NO : Repair or replace it. Refer to GROUP 00E, Harness Connector Inspection P.00E-2. Then go to Step 15.

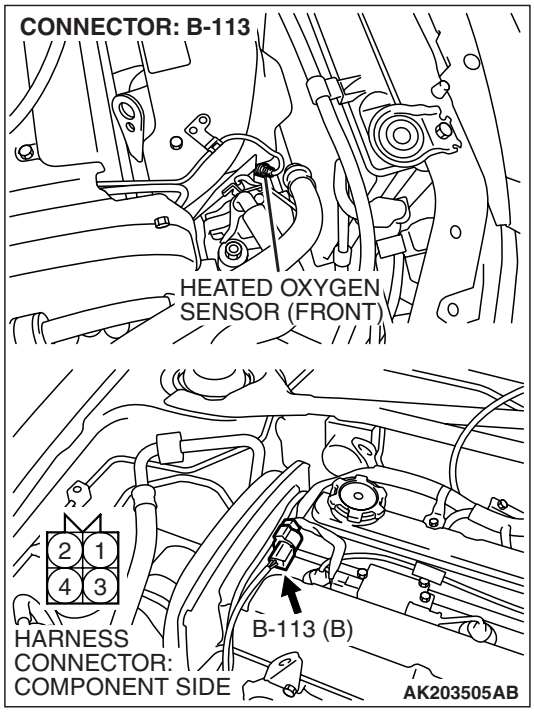

STEP 7. Check harness connector B-113 at heated oxygen sensor (front) for damage.

Q: Is the harness connector in good condition?

YES : Go to Step 8.

NO : Repair or replace it. Refer to GROUP 00E, Harness Connector Inspection P.00E-2. Then go to Step 15.

STEP 8. Check for continuity at heated oxygen sensor (front) harness side connector B-113.

(1) Disconnect connector B-113 and measure at the harness side.

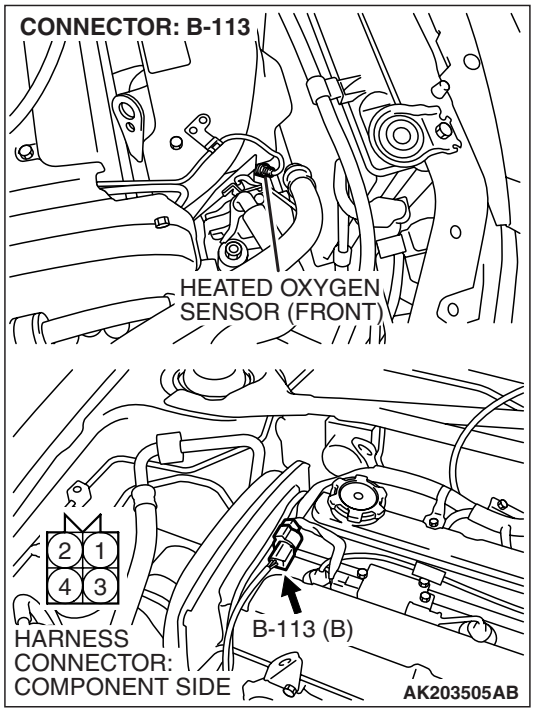

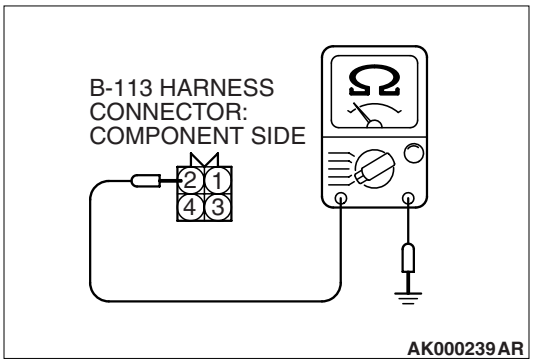

(2) Check for the continuity between terminal No. 2 and ground.
- Should be less than 2 ohms.

Q: Does continuity exist?

YES : Go to Step 11.
NO : Go to Step 9.

STEP 9. Check harness connector C-119 at ECM for damage.

Q: Is the harness connector in good condition?

YES : Go to Step 10.
NO : Repair or replace it. Refer to GROUP 00E, Harness Connector Inspection P.00E-2. Then go to Step 15.

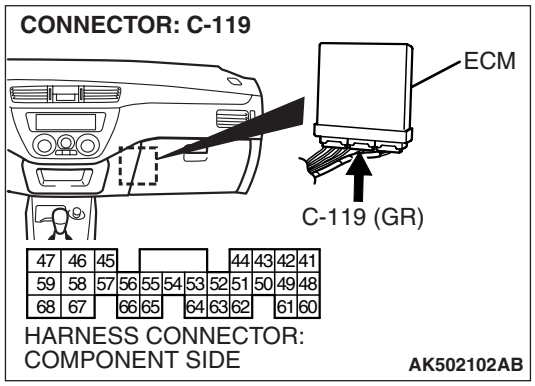

STEP 10. Check for open circuit and harness damage between heated oxygen sensor (front) connector B-113 (terminal No. 2) and ECM connector C-119 (terminal No. 49).

Q: Is the harness wire in good condition?

YES : Replace the ECM. Then go to Step 15.

NO : Repair it. Then go to Step 15.

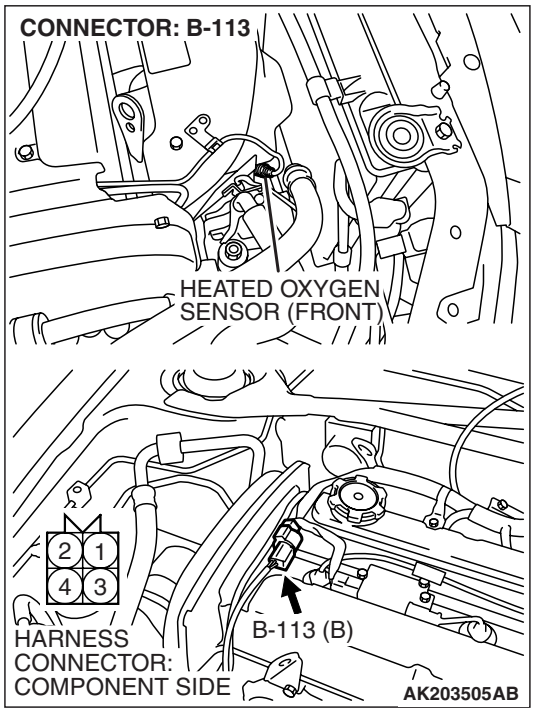

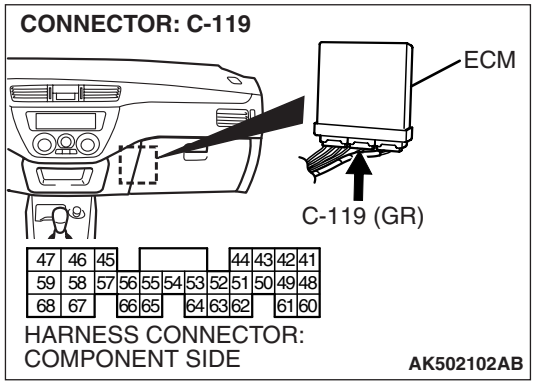

STEP 11. Check harness connector C-119 at ECM for damage.

Q: Is the harness connector in good condition?

YES : Go to Step 12.

NO : Repair or replace it. Refer to GROUP 00E, Harness Connector Inspection P.00E-2. Then go to Step 15.

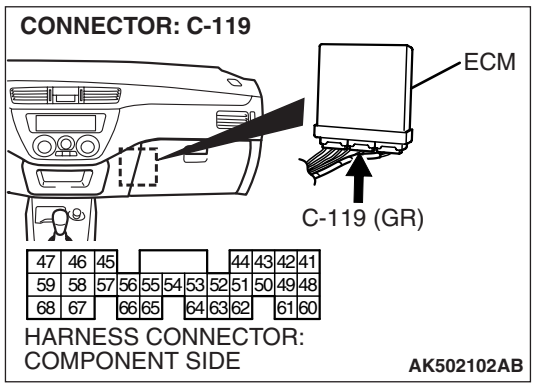

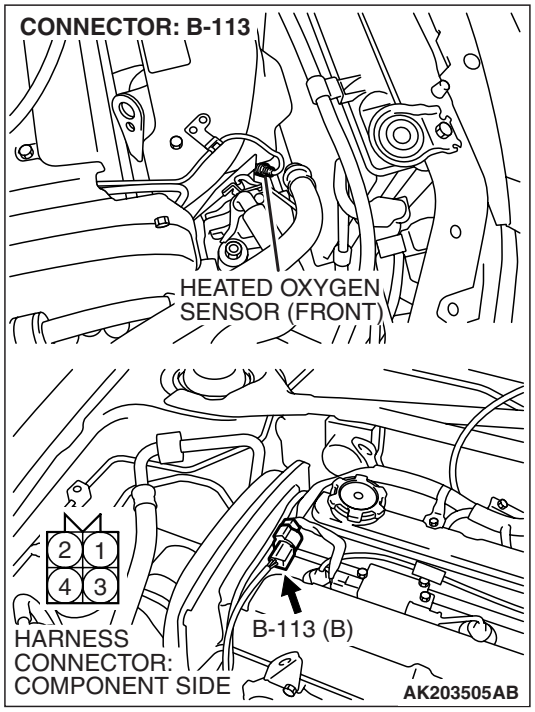

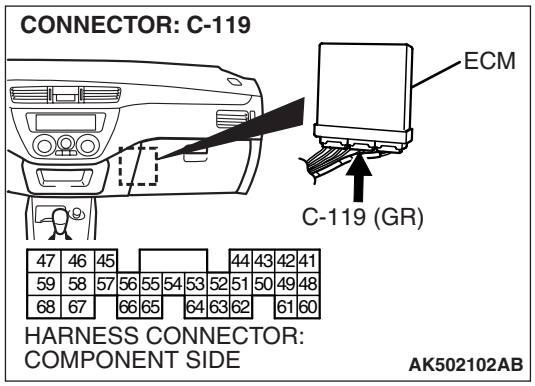

STEP 12. Check for harness damage between heated oxygen sensor (front) connector B-113 (terminal No. 2) and ECM connector C-119 (terminal No. 49).

Q: Is the harness wire in good condition?

YES : Go to Step 13.

NO : Repair it. Then go to Step 15.

STEP 13. Check for short circuit to ground and harness damage between heated oxygen sensor (front) connector B-113 (terminal No. 4) and ECM connector C-117 (terminal No. 71).

Q: Is the harness wire in good condition?

YES : Go to Step 14.

NO : Repair it. Then go to Step 15.

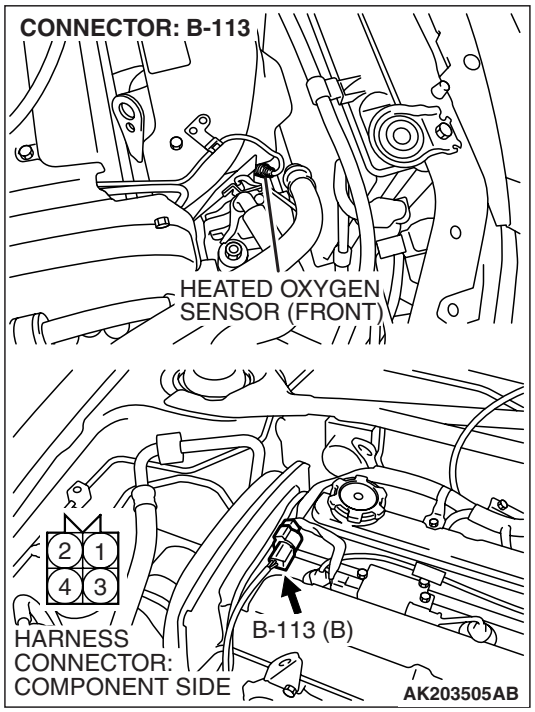

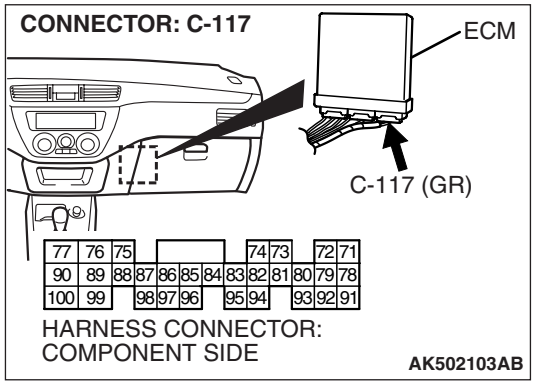

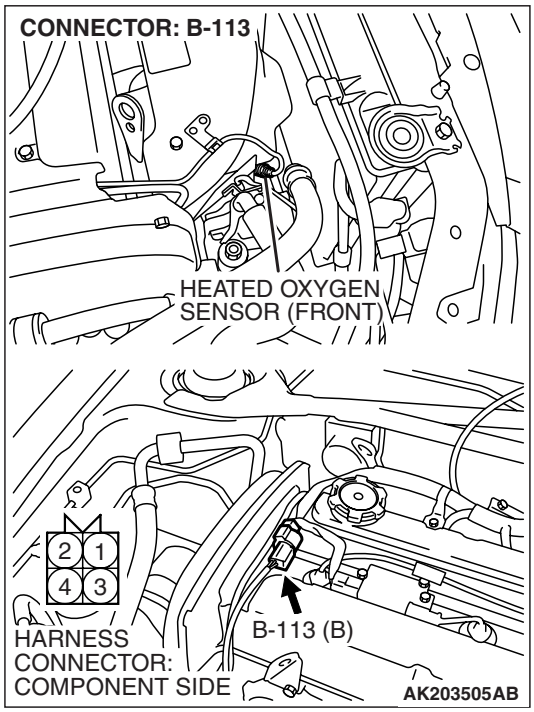

STEP 14. Check the heated oxygen sensor (front).

(1) Disconnect the heated oxygen sensor (front) connector B-113 and connect test harness special tool, MD998464, to the connector on the heated oxygen sensor (front) side.

(2) Warm up the engine until engine coolant temperature reaches 80° C (176° F) or higher.

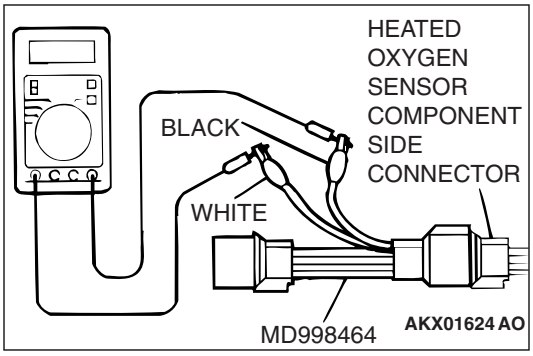

(3) Perform a racing for 5 minutes or more with the engine speed of 4,500 r/min.

(4) Connect a digital voltage meter between terminal No. 2 (black clip) and terminal No. 4 (white clip).

(5) While repeatedly revving the engine, measure the heated oxygen sensor (front) output voltage.

Standard value: 0.6 – 1.0 volt

⚠ CAUTION

- **Be very careful when connecting the jumper wires; incorrect connection can damage the heated oxygen sensor.**
- **Be careful the heater is broken when voltage of beyond 8 volts is applied to the heated oxygen sensor heater.**

  NOTE: If the sufficiently high temperature [of approximate 400°C (752°F) or more] is not reached although the heated oxygen sensor is normal, the output voltage would be possibly low although the rich air/fuel ratio. Therefore, if the output voltage is low, use a jumper wire to connect the terminal No.1 (red clip) and the terminal No. 3 (blue clip) of the heated oxygen sensor with the positive terminal and the negative terminal of 8 volts power supply respectively, then check again.

Q: Is the measured voltage between 0.6 and 1.0 volt?

YES : Replace the ECM. Then go to Step 15.

NO : Replace the heated oxygen sensor (front). Then go to Step 15.

STEP 15. Test the OBD-II drive cycle.

(1) Carry out a test drive with the drive cycle pattern. Refer to GROUP 13A, Diagnostic Function –OBD-II Drive Cycle – Pattern 11 P.13A-12.

(2) Check the diagnostic trouble code (DTC).

Q: Is DTC P0130 set?

YES : Retry the troubleshooting.

NO : The inspection is complete.

DTC P0131: Heated Oxygen Sensor Circuit Low Voltage <SENSOR 1>

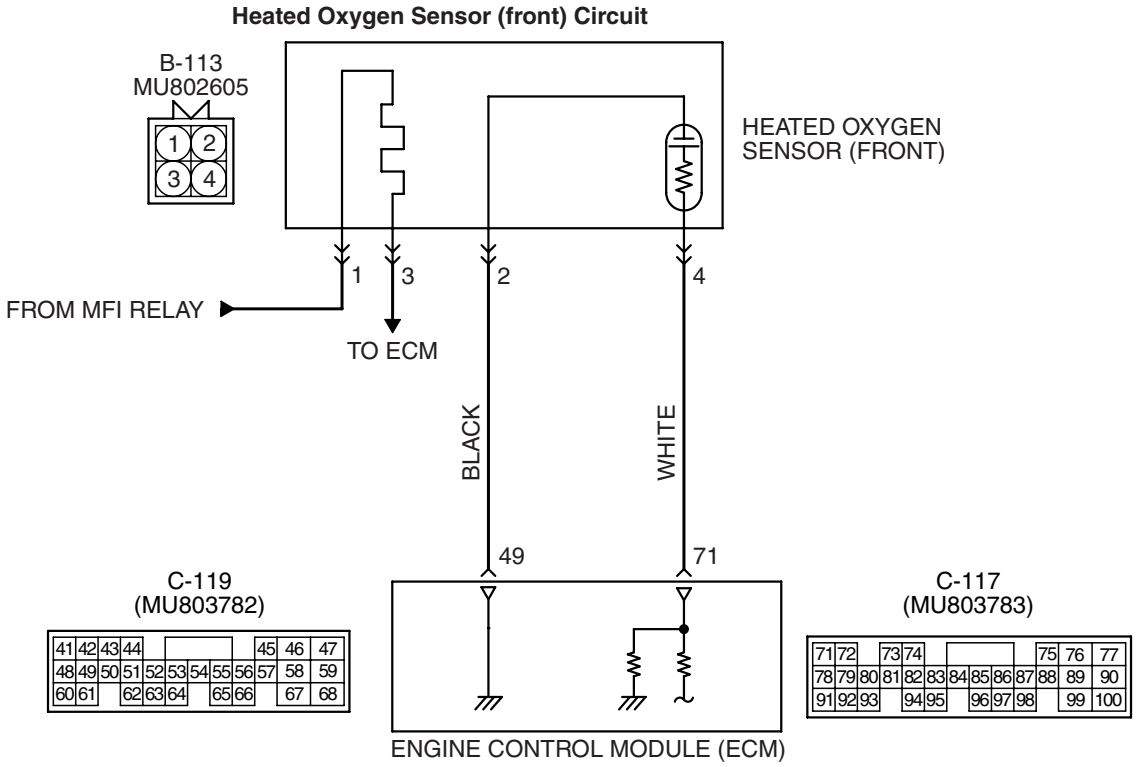

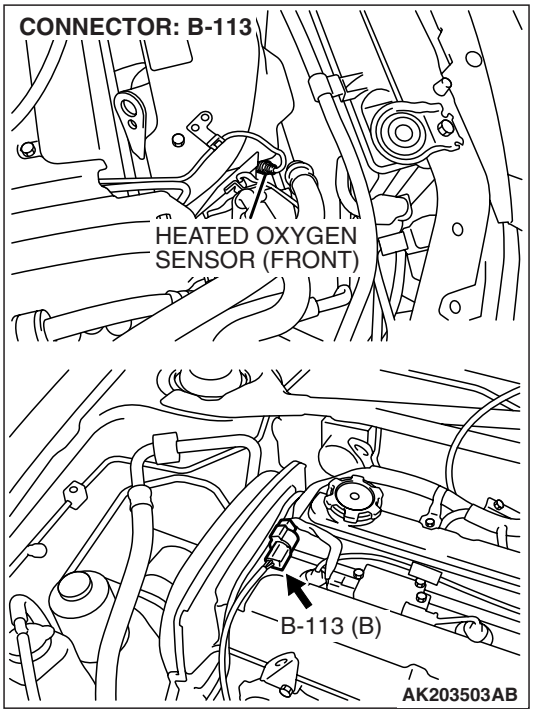

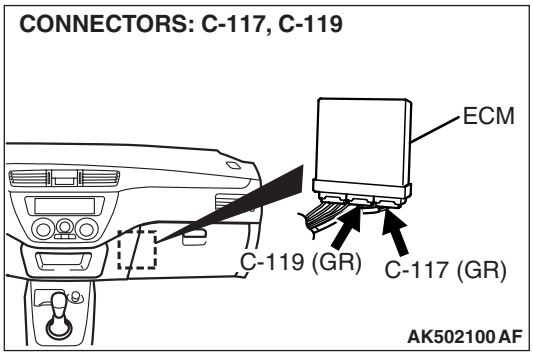

CIRCUIT OPERATION

- A voltage corresponding to the oxygen concentration in the exhaust gas is sent to the ECM (terminal No. 71) from the output terminal (terminal No. 4) of the heated oxygen sensor (front).
- Terminal No. 2 of the heated oxygen sensor (front) is grounded with ECM (terminal No. 49).

TECHNICAL DESCRIPTION

- The heated oxygen sensor (front) detects the concentration of oxygen in the exhaust gas; it converts this data to voltage, and inputs the resulting signals to the ECM.
- When the heated oxygen sensor (front) begins to deteriorate, the heated oxygen sensor signal response becomes poor.
- The ECM forcibly varies the air/fuel mixture to make it leaner and richer, and checks the response speed of the heated oxygen sensor (front). In addition, the ECM also checks for an open circuit in the heated oxygen sensor (front) output line.

DESCRIPTIONS OF MONITOR METHODS

- Heated oxygen sensor (front) output voltage stays low when air/fuel ratio is forced to be rich. The above procedure is repeated when oxygen sensor is inactive.

MONITOR EXECUTION

- Continuous

MONITOR EXECUTION CONDITIONS (Other monitor and Sensor)

Other Monitor (There is no temporary DTC stored in memory for the item monitored below)

- Heated oxygen sensor heater (front) monitor
- Misfire monitor
- Fuel system monitor

Sensor (The sensor below is determined to be normal)

- Volume airflow sensor
- Engine coolant temperature sensor
- Intake air temperature sensor
- Barometric pressure sensor
- Throttle position sensor
- Accelerator position sensor

DTC SET CONDITIONS

Logic Flow Chart

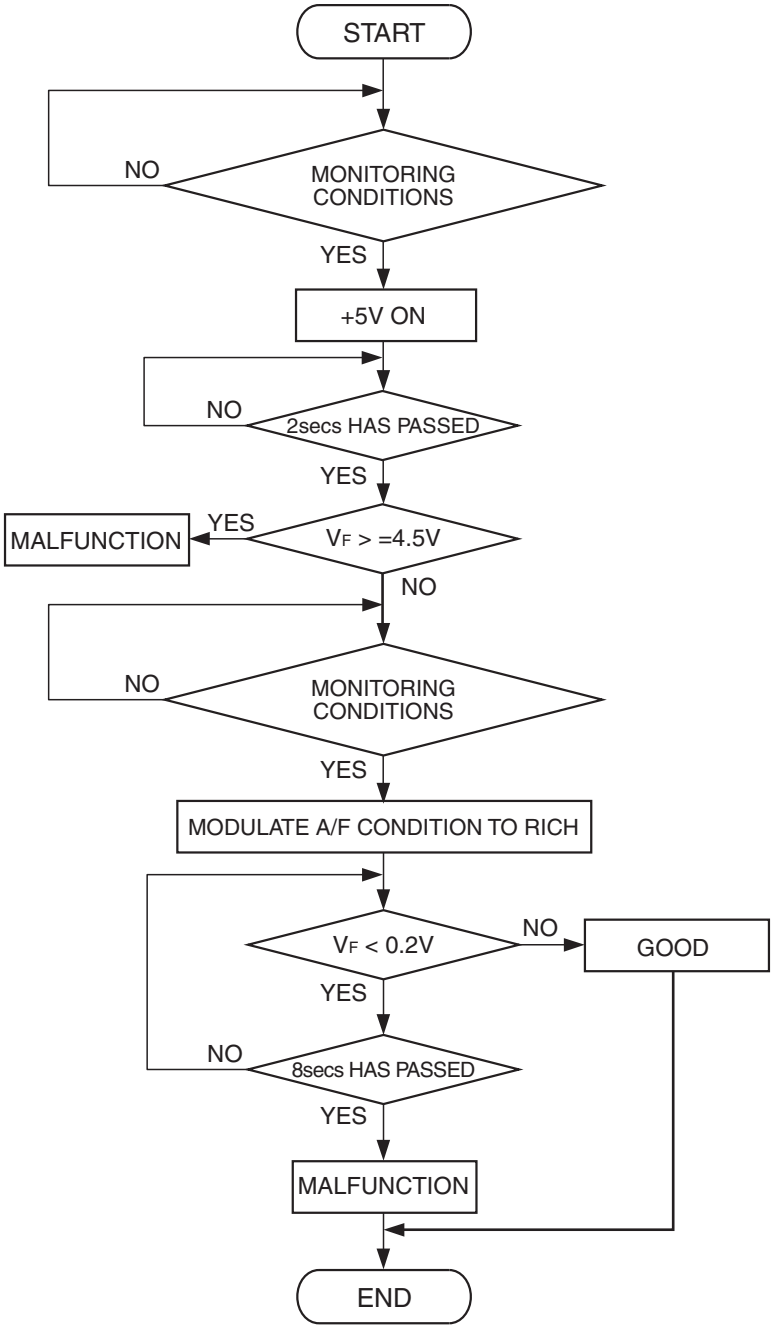

AK401409

Check Conditions

- After 2 seconds or more pass from the time when the monitor determines normally for detecting an open circuit.
- Heated oxygen sensor (front) signal voltage has continued to be 0.2 volt or lower.
- Engine coolant temperature is higher than 76° C (169° F).
- Volume airflow sensor output frequency is 56 Hz or more.
- At least 20 seconds have passed since fuel shut off control was canceled.
- Monitoring time: 8 seconds.

TSB Revision

Judgement Criterion

- Making the air/fuel ratio 15 percent for 8 seconds richer does not result in raising the heated oxygen sensor (front) output voltage beyond 0.2 volt.

OBD-II DRIVE CYCLE PATTERN

Refer to Diagnostic Function –OBD-II Drive Cycle – Pattern 11 P.13A-12.

TROUBLESHOOTING HINTS (The most likely causes for this code to be set are:)

- Heated oxygen sensor (front) deteriorated.
- Short circuit in heated oxygen sensor (front) output line.
- Connector damage.
- ECM failed.

DIAGNOSIS

Required Special Tools:

- MB991958: Scan Tool (M.U.T.-III Sub Assembly)
  - MB991824: V.C.I.
  - MB991827: USB Cable
  - MB991911: Main Harness B
- MD998464: Test Harness

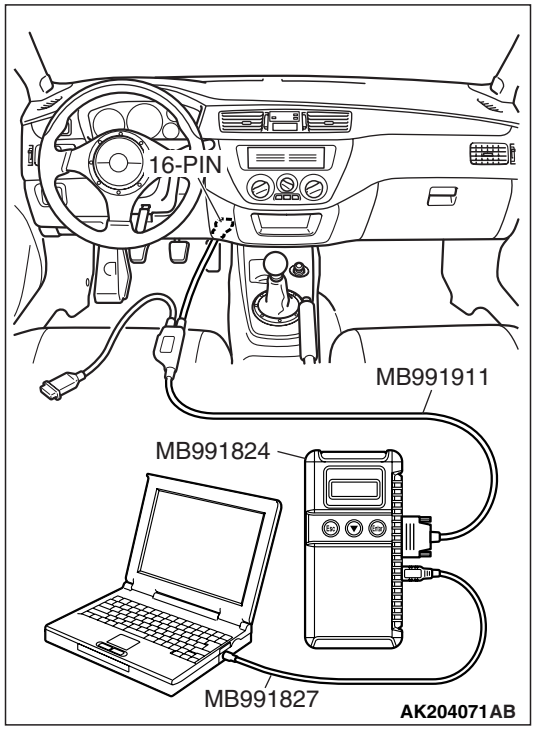

STEP 1. Using scan tool MB991958, check data list item 11: Heated Oxygen Sensor (front).

⚠ CAUTION

To prevent damage to scan tool MB991958, always turn the ignition switch to the "LOCK" (OFF) position before connecting or disconnecting scan tool MB991958.

(1) Connect scan tool MB991958 to the data link connector.
(2) Start the engine and run at idle.
(3) Set scan tool MB991958 to the data reading mode for item 11, Heated Oxygen Sensor (front).
  - Warm up the engine. When the engine is revved, the output voltage should be 0.6 to 1.0 volt.
  - Warm up the engine. When the engine is idling, the output voltage should repeat 0.4 volt and 0.6 to 1.0 volt alternately.

(4) Turn the ignition switch to the "LOCK" (OFF) position.

Q: Is the sensor operating properly?

YES : It can be assumed that this malfunction is intermittent. Refer to GROUP 00, How to Use Troubleshooting/Inspection Service Points –How to Cope with Intermittent Malfunctions P.00-13.

NO : Go to Step 2.

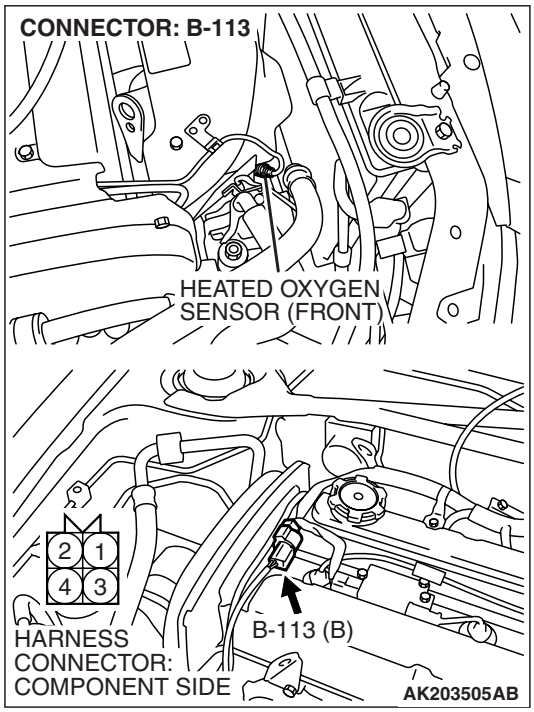

STEP 2. Check the heated oxygen sensor (front).

(1) Disconnect the heated oxygen sensor (front) connector B-113 and connect test harness special tool, MD998464, to the connector on the heated oxygen sensor (front) side.

(2) Warm up the engine until engine coolant temperature reaches 80° C (176° F) or higher.

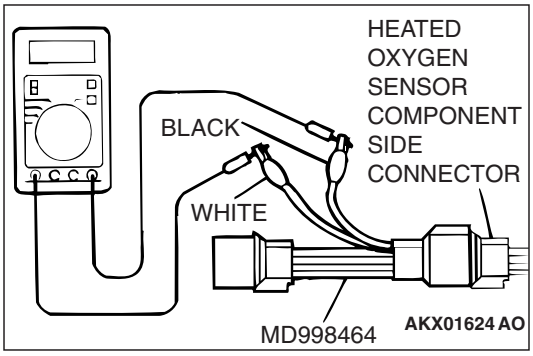

(3) Perform a racing for 5 minutes or more with the engine speed of 4,500 r/min.

(4) Connect a digital voltage meter between terminal No. 2 (black clip) and terminal No. 4 (white clip).

(5) While repeatedly revving the engine, measure the heated oxygen sensor (front) output voltage.

Standard value: 0.6 – 1.0 volt

⚠ CAUTION

- **Be very careful when connecting the jumper wires; incorrect connection can damage the heated oxygen sensor.**
- **Be careful the heater is broken when voltage of beyond 8 volts is applied to the heated oxygen sensor heater.**

  NOTE: If the sufficiently high temperature [of approximate 400°C (752°F) or more] is not reached although the heated oxygen sensor is normal, the output voltage would be possibly low although the rich air/fuel ratio. Therefore, if the output voltage is low, use a jumper wire to connect the terminal No.1 (red clip) and the terminal No. 3 (blue clip) of the heated oxygen sensor with the positive terminal and the negative terminal of 8 volts power supply respectively, then check again.

Q: Is the measured voltage between 0.6 and 1.0 volt?

YES : Go to Step 3.

NO : Replace the heated oxygen sensor (front). Then go to Step 5.

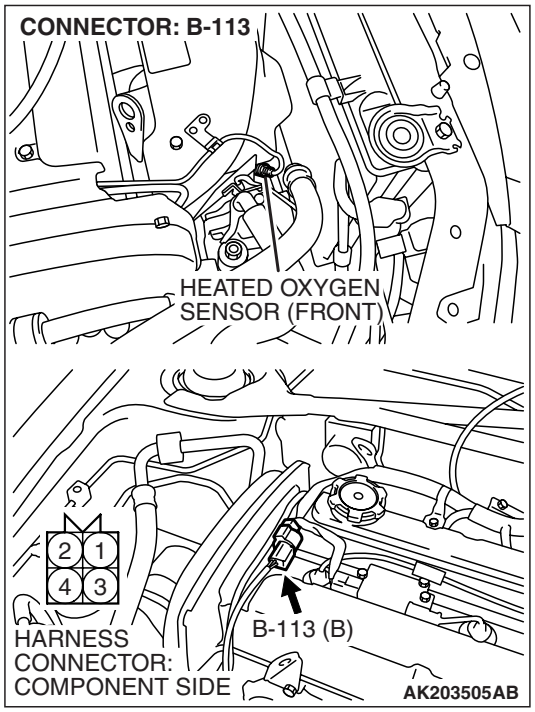

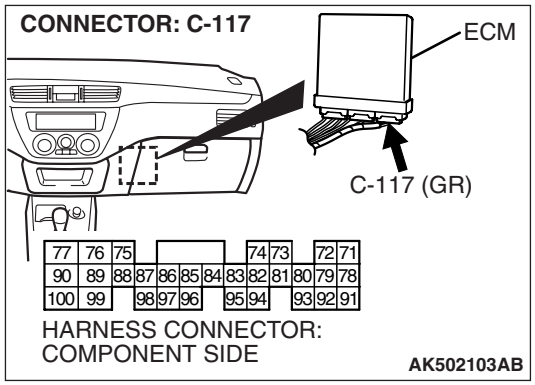

STEP 3. Check harness connector B-113 at heated oxygen sensor (front) and connector C-117 at ECM for damage.

Q: Is the harness connector in good condition?

YES : Go to Step 4.

NO : Repair or replace it. Refer to GROUP 00E, Harness Connector Inspection P.00E-2. Then go to Step 5.

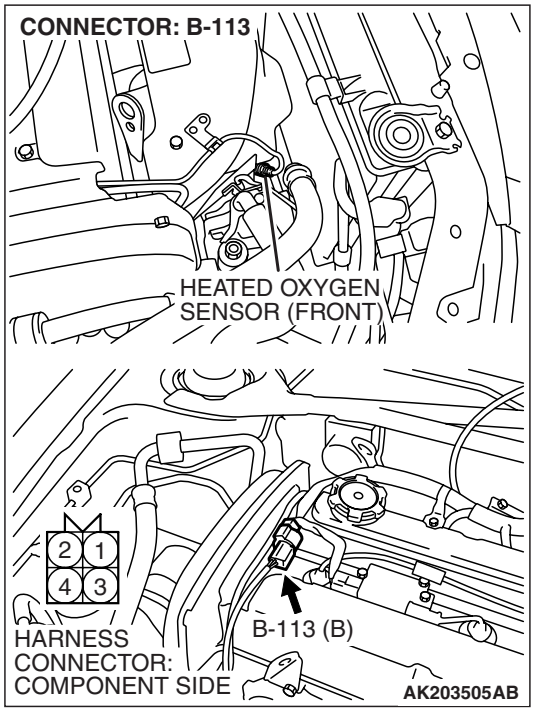

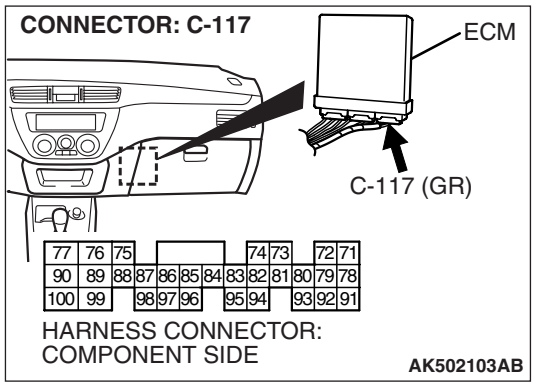

STEP 4. Check for short circuit to ground between heated oxygen sensor (front) connector B-113 (terminal No. 4) and ECM connector C-117 (terminal No. 71).

Q: Is the harness wire in good condition?

YES : Replace the ECM. Then go to Step 5.

NO : Repair it. Then go to Step 5.

STEP 5. Test the OBD-II drive cycle.

(1) Carry out a test drive with the drive cycle pattern. Refer to GROUP 13A, Diagnostic Function –OBD-II Drive Cycle – Pattern 11 P.13A-12.

(2) Check the diagnostic trouble code (DTC).

Q: Is DTC P0131 set?

YES : Retry the troubleshooting.

NO : The inspection is complete.

DTC P0132: Heated Oxygen Sensor Circuit High Voltage <SENSOR 1>

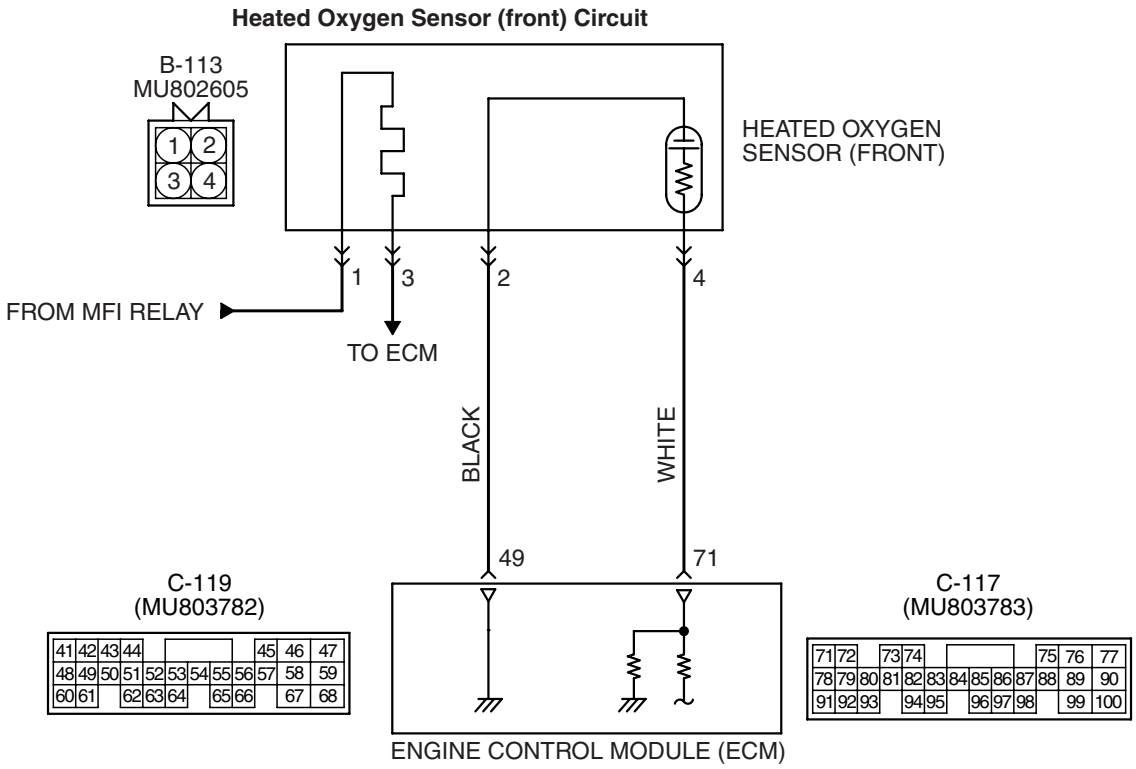

AK502066

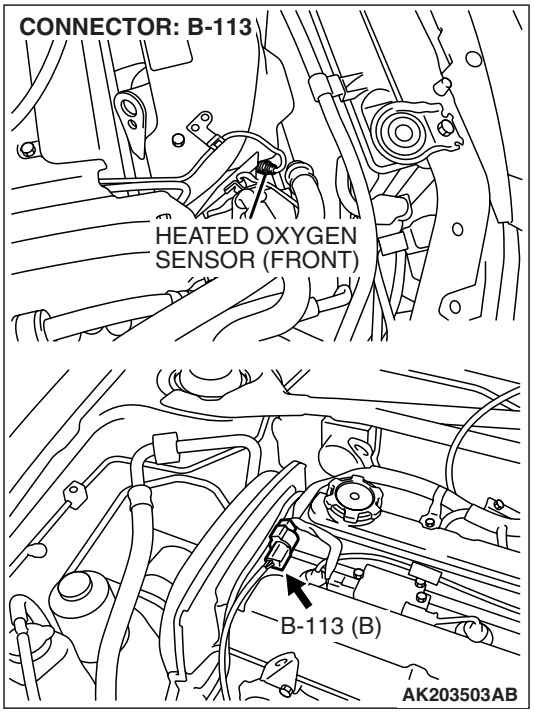

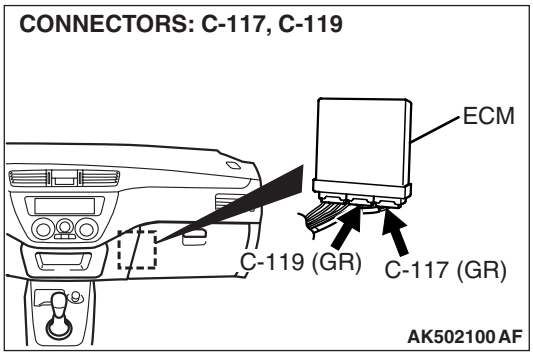

CIRCUIT OPERATION

- A voltage corresponding to the oxygen concentration in the exhaust gas is sent to the ECM (terminal No. 71) from the output terminal (terminal No. 4) of the heated oxygen sensor (front).
- Terminal No. 2 of the heated oxygen sensor (front) is grounded with ECM (terminal No. 49).

TECHNICAL DESCRIPTION

- The heated oxygen sensor (front) detects the concentration of oxygen in the exhaust gas; it converts those data to voltage, and inputs the resulting signals to the ECM.
- When the heated oxygen sensor (front) begins to deteriorate, the heated oxygen sensor signal response becomes poor.
- The ECM forcibly varies the air/fuel mixture to make it leaner and richer, and checks the response speed of the heated oxygen sensor (front). In addition, the ECM also checks for an open circuit in the heated oxygen sensor (front) output line.

DESCRIPTIONS OF MONITOR METHODS

- Heated oxygen sensor (front) output voltage is over specified range.

MONITOR EXECUTION

- Continuous

MONITOR EXECUTION CONDITIONS (Other monitor and Sensor)

Other Monitor (There is no temporary DTC stored in memory for the item monitored below)

- Heated oxygen sensor heater (front) monitor
- Misfire monitor
- Fuel system monitor

Sensor (The sensor below is determined to be normal)

- Volume airflow sensor
- Engine coolant temperature sensor
- Intake air temperature sensor
- Barometric pressure sensor
- Throttle position sensor
- Accelerator position sensor

DTC SET CONDITIONS

Logic Flow Chart

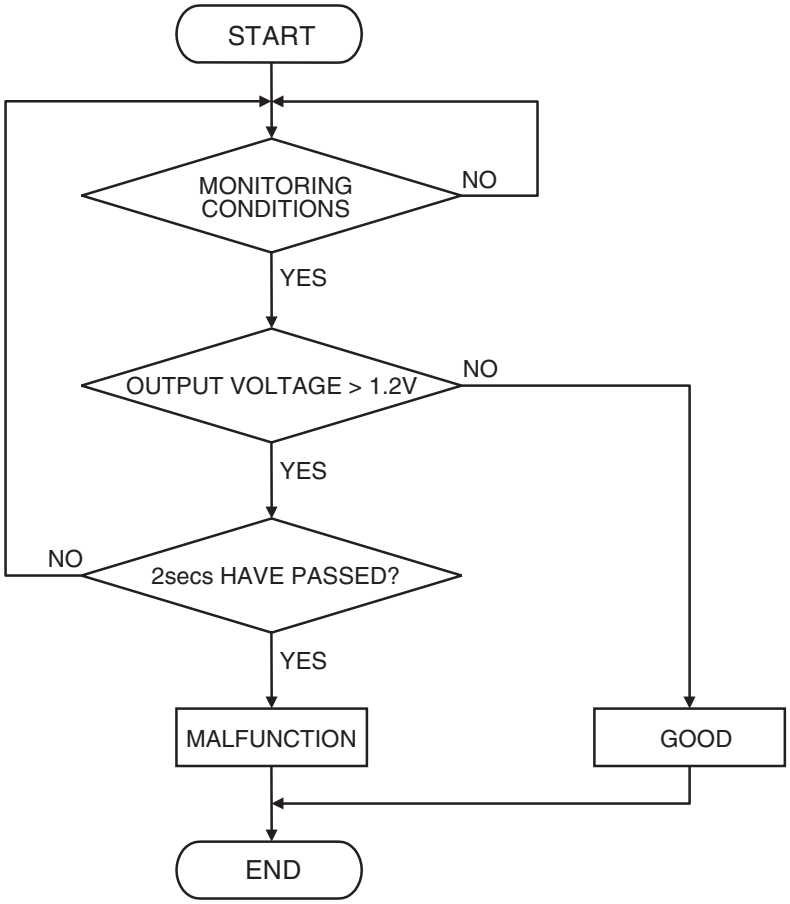

AK301437

Check Condition

- 2 seconds or more have passed since the engine starting sequence was completed.

Judgment Criterion

- Heated oxygen sensor (front) output voltage has continued to be 1.2 volts or higher for 2 seconds.

OBD-II DRIVE CYCLE PATTERN

Refer to Diagnosis Function –OBD-II Drive Cycle – Pattern 23 P.13A-12.

TROUBLESHOOTING HINTS (The most likely causes for this code to be set are:)

- Heated oxygen sensor (front) deteriorated.
- Short circuit in heated oxygen sensor (front) output line.
- Connector damage.
- ECM failed.

DIAGNOSIS

Required Special Tools:

- MB991958: Scan Tool (M.U.T.-III Sub Assembly)
  - MB991824: V.C.I.
  - MB991827: USB Cable
  - MB991911: Main Harness B

TSB Revision

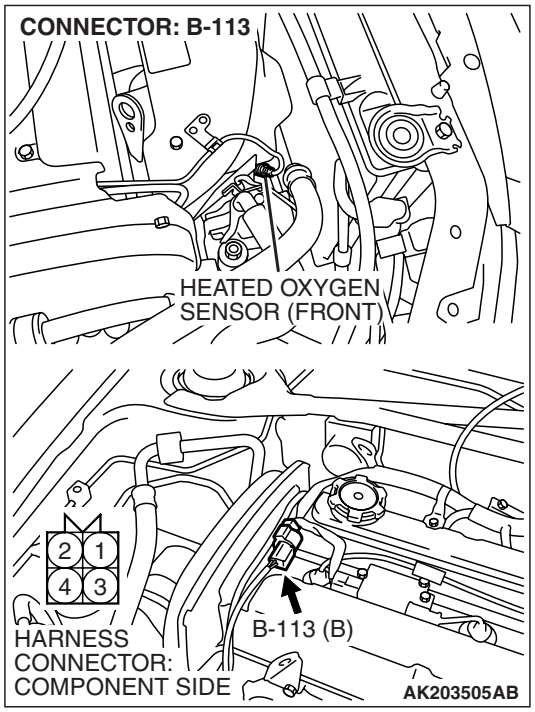

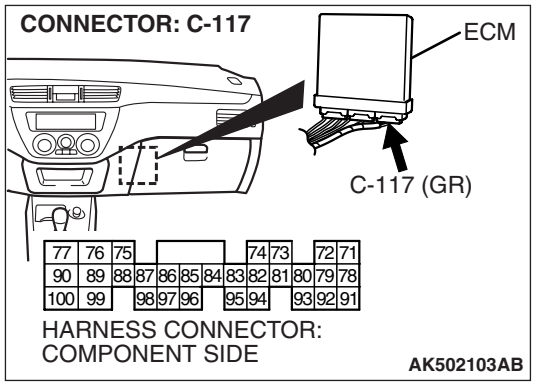

STEP 1. Check harness connector B-113 at heated oxygen sensor (front) and connector C-117 at ECM for damage.

Q: Is the harness connector in good condition?

YES : Go to Step 2.

NO : Repair or replace it. Refer to GROUP 00E, Harness Connector Inspection P.00E-2. Then go to Step 3.

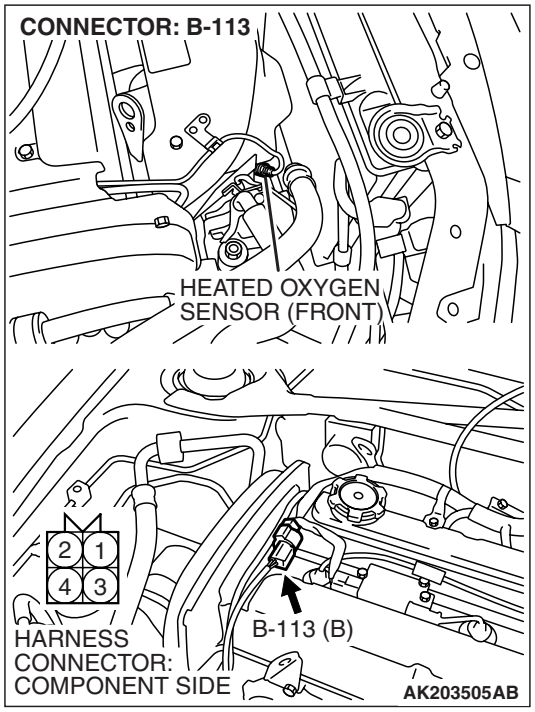

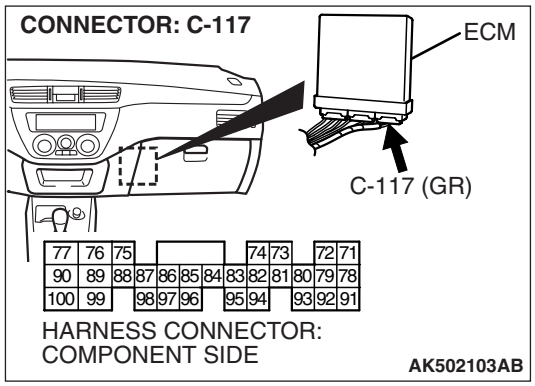

STEP 2. Check for short circuit to power supply between heated oxygen sensor (front) connector B-113 (terminal No. 4) and ECM connector C-117 (terminal No. 71).

Q: Is the harness wire in good condition?

YES : Replace the ECM. Then go to Step 3.

NO : Repair it. Then go to Step 3.

STEP 3. Test the OBD-II drive cycle.

(1) Carry out a test drive with the drive cycle pattern. Refer to GROUP 13A, Diagnostic Function –OBD-II Drive Cycle – Pattern 23 P.13A-12.

(2) Check the diagnostic trouble code (DTC).

Q: Is DTC P0132 set?

YES : Retry the troubleshooting.

NO : The inspection is complete.

DTC P0133: Heated Oxygen Sensor Circuit Slow Response <SENSOR 1>

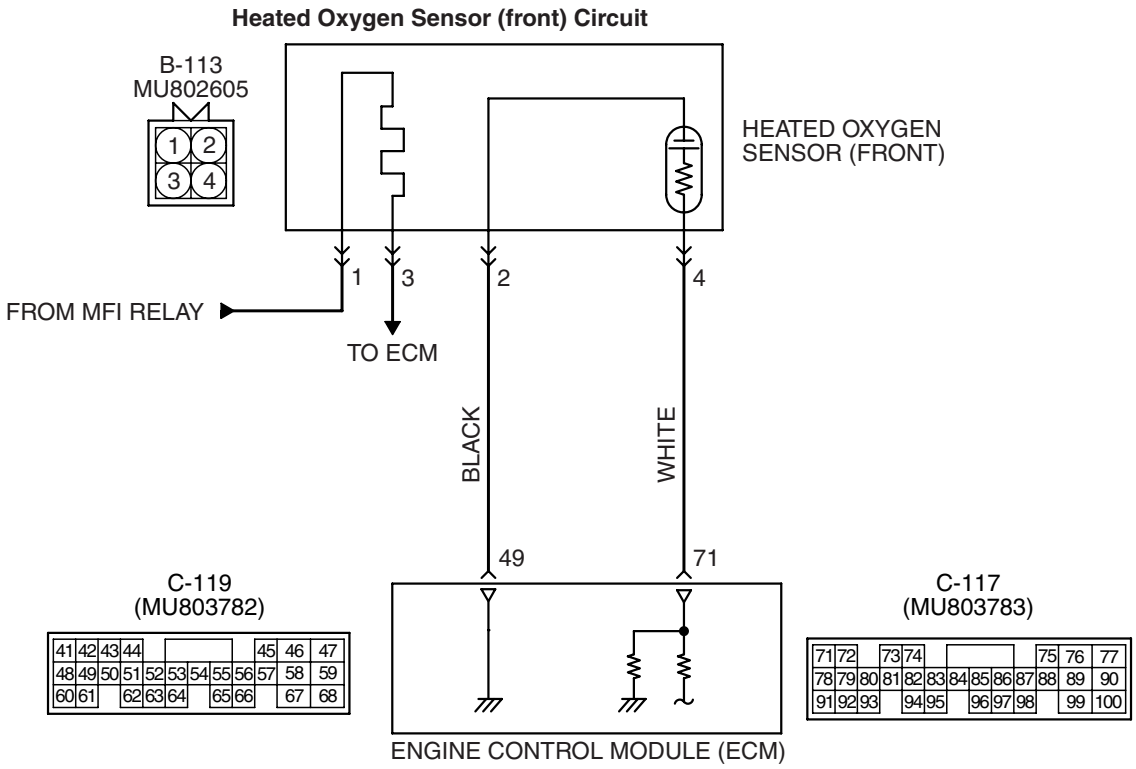

AK502066

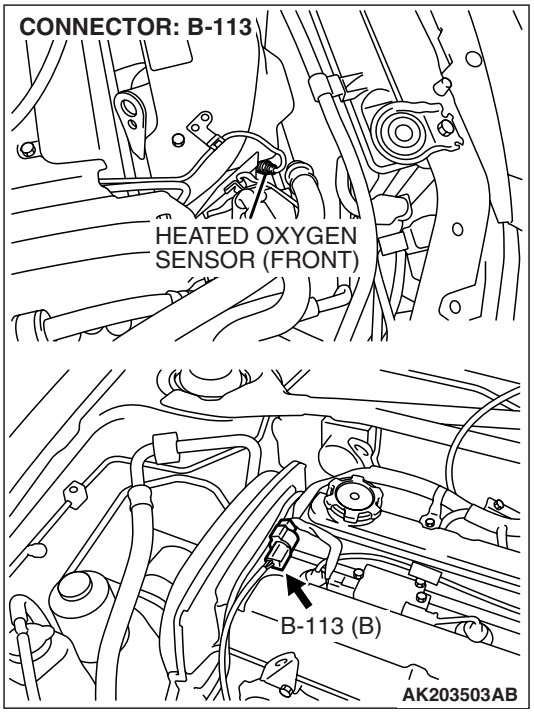

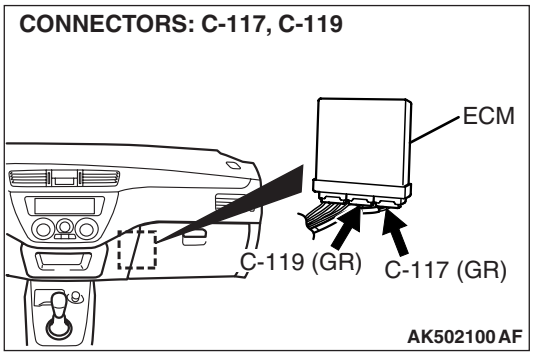

CIRCUIT OPERATION

- A voltage corresponding to the oxygen concentration in the exhaust gas is sent to the ECM (terminal No. 71) from the output terminal (terminal No. 4) of the heated oxygen sensor (front).
- Terminal No. 2 of the heated oxygen sensor (front) is grounded with ECM (terminal No. 49).

TECHNICAL DESCRIPTION

- The heated oxygen sensor (front) detects the concentration of oxygen in the exhaust gas; it converts those data to voltage, and inputs the resulting signals to the ECM.
- When the heated oxygen sensor (front) begins to deteriorate, the heated oxygen sensor signal response becomes poor.
- The ECM forcibly varies the air/fuel mixture to make it leaner and richer, and checks the response speed of the heated oxygen sensor (front). In addition, the ECM also checks for an open circuit in the heated oxygen sensor (front) output line.

DESCRIPTIONS OF MONITOR METHODS

- Heated oxygen sensor (front) rich/lean switching frequency is under specified value.

MONITOR EXECUTION

- Continuous

MONITOR EXECUTION CONDITIONS (Other monitor and Sensor)

Other Monitor (There is no temporary DTC stored in memory for the item monitored below)

- Heated oxygen sensor heater (front) monitor
- Misfire monitor
- Fuel system monitor

Sensor (The sensor below is determined to be normal)

- Volume airflow sensor
- Engine coolant temperature sensor
- Intake air temperature sensor
- Barometric pressure sensor
- Throttle position sensor

DTC SET CONDITIONS

Logic Flow Chart

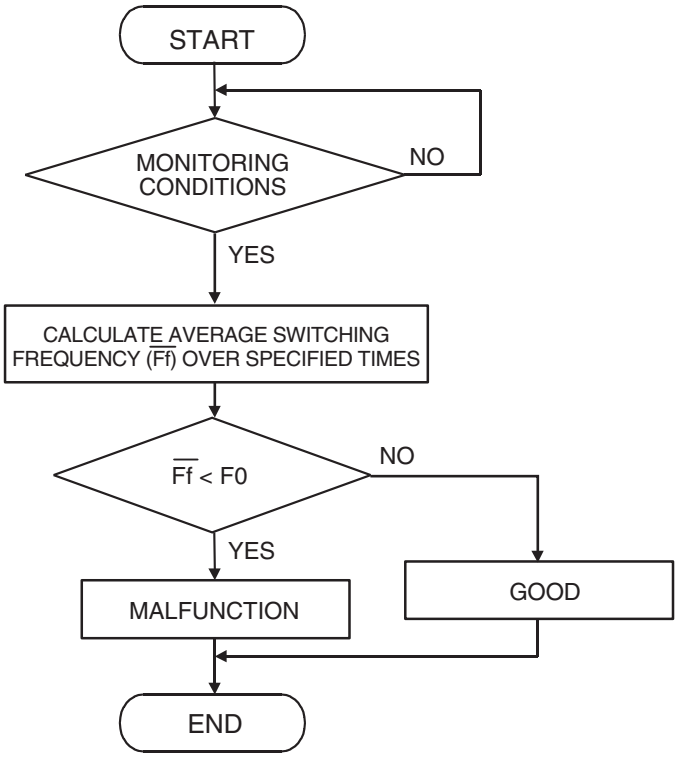

AK305541

Check Conditions

- Engine coolant temperature is higher than 50° C (122° F).
- Engine speed is at between 1,200 and 3,000 r/min.
- Volumetric efficiency is at between 20 and 60 percent.
- Under the closed loop air/fuel control.
- The throttle valve is open.
- Short-term fuel trim is higher than –25 and lower than + 25 percent.
- More than 2 seconds have elapsed after the above mentioned conditions have been met.
- The ECM monitors for this condition for 7 cycles of 10 second each during the drive cycle.

Judgment Criterion

- The heated oxygen sensor (front) sends "lean" and "rich" signals alternately 9 times or less for 10 seconds.

NOTE: If the sensor switching frequency is lower than the Judgment Criteria due to the MB991958 OBD-II test Mode – H02S Test Results, it is assumed that the heated oxygen sensor has deteriorated. If it is higher, it is assumed that the harness is damaged or has a short circuit.
If the heated oxygen sensor signal voltage has not changed even once (lean/rich) after the DTC was erased, the sensor switch time will display as 0 seconds.

OBD-II DRIVE CYCLE PATTERN

Refer to Diagnostic Function –OBD-II Drive Cycle – Pattern 1 P.13A-12.

TROUBLESHOOTING HINTS (The most likely causes for this code to be set are:)

- Heated oxygen sensor (front) deteriorated.
- Connector damage.
- ECM failed.

DIAGNOSIS

Required Special Tools:

- MB991958: Scan Tool (M.U.T.-III Sub Assembly)
  - MB991824: V.C.I.
  - MB991827: USB Cable
  - MB991911: Main Harness B
- MD998464: Test Harness

STEP 1. Using scan tool MB991958, check data list item 11: Heated Oxygen Sensor (front).

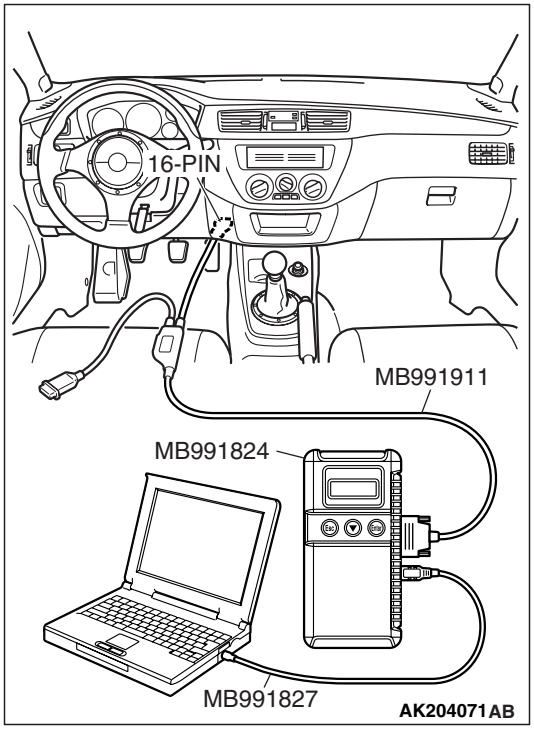

⚠ CAUTION

To prevent damage to scan tool MB991958, always turn the ignition switch to the "LOCK" (OFF) position before connecting or disconnecting scan tool MB991958.

(1) Connect scan tool MB991958 to the data link connector.
(2) Start the engine and run at idle.
(3) Set scan tool MB991958 to the data reading mode for item 11, Heated Oxygen Sensor (front).
(4) Warm up the engine, 2,500 r/min.
  - Output voltage repeats 0.4 volt or less and 0.6 – 1.0 volt 10 times or more within 10 seconds.

(5) Turn the ignition switch to the "LOCK" (OFF) position.

Q: Is the sensor operating properly?

YES : It can be assumed that this malfunction is intermittent. Refer to GROUP 00, How to Use Troubleshooting/Inspection Service Points –How to Cope with Intermittent Malfunctions P.00-13.

NO : Go to Step 2.

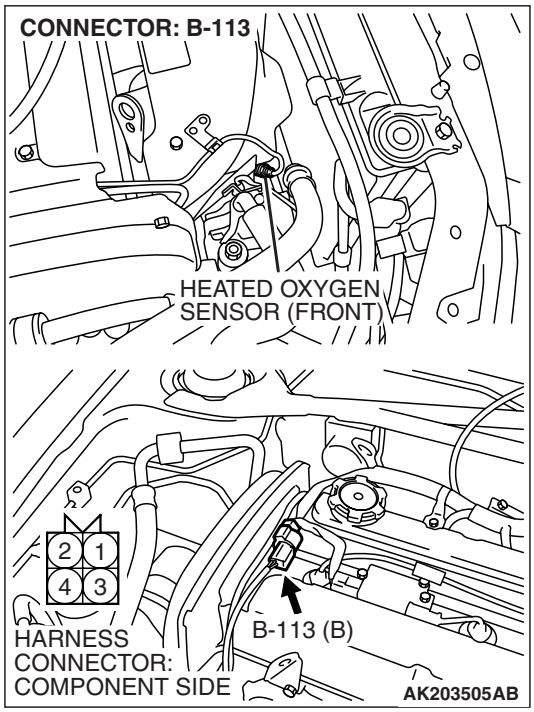

STEP 2. Check the heated oxygen sensor (front).

(1) Disconnect the heated oxygen sensor (front) connector B-113 and connect test harness special tool, MD998464, to the connector on the heated oxygen sensor (front) side.

(2) Warm up the engine until engine coolant temperature reaches 80° C (176° F) or higher.

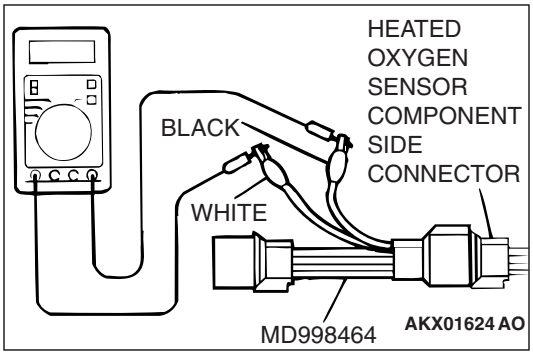

(3) Perform a racing for 5 minutes or more with the engine speed of 4,500 r/min.

(4) Connect a digital voltage meter between terminal No. 2 (black clip) and terminal No. 4 (white clip).

(5) While repeatedly revving the engine, measure the heated oxygen sensor (front) output voltage.

Standard value: 0.6 – 1.0 volt

⚠ CAUTION

- **Be very careful when connecting the jumper wires; incorrect connection can damage the heated oxygen sensor**
- **Be careful the heater is broken when voltage of beyond 8 volts is applied to the heated oxygen sensor heater.**

  NOTE: If the sufficiently high temperature [of approximate 400°C (752°F) or more] is not reached although the heated oxygen sensor is normal, the output voltage would be possibly low although the rich air/fuel ratio. Therefore, if the output voltage is low, use a jumper wire to connect the terminal No.1 (red clip) and the terminal No. 3 (blue clip) of the heated oxygen sensor with the positive terminal and the negative terminal of 8 volts power supply respectively, then check again.

Q: Is the measured voltage between 0.6 and 1.0 volt?

YES : Go to Step 3.

NO : Replace the heated oxygen sensor (front). Then go to Step 4.

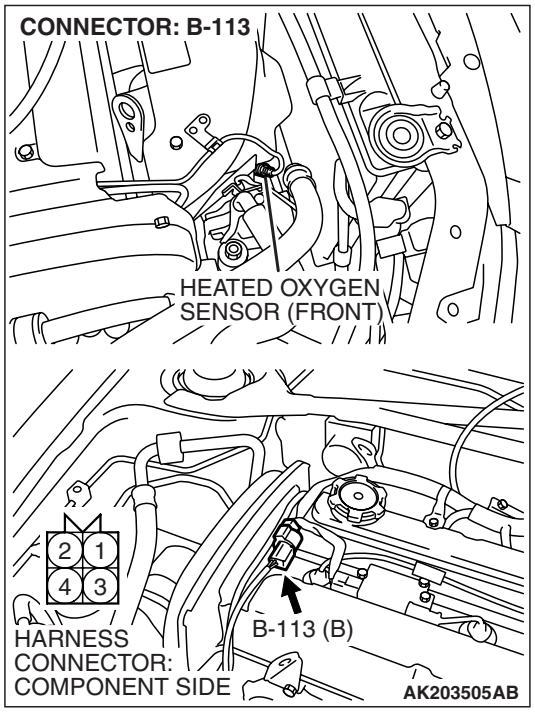

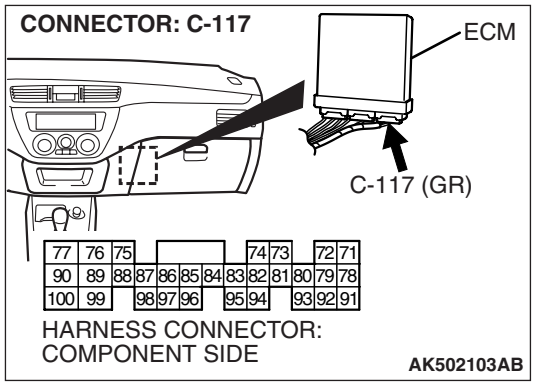

STEP 3. Check harness connector B-113 at heated oxygen sensor (front) and connector C-117 at ECM for damage.

Q: Is the harness connector in good condition?

YES : Replace the ECM. Then go to Step 4.

NO : Repair or replace it. Refer to GROUP 00E, Harness Connector Inspection P.00E-2. Then go to Step 4.

STEP 4. Test the OBD-II drive cycle.

(1) Carry out a test drive with the drive cycle pattern. Refer to GROUP 13A, Diagnostic Function –OBD-II Drive Cycle – Pattern 1 P.13A-12.

(2) Check the diagnostic trouble code (DTC).

Q: Is DTC P0133 set?

YES : Retry the troubleshooting.

NO : The inspection is complete.

DTC P0134: Heated Oxygen Sensor Circuit No Activity Detected <SENSOR 1>

Heated Oxygen Sensor Circuit No Activity Detected (sensor 1) Circuit

- Refer to, DTC P0130 Heated Oxygen Sensor (front) Circuit P.13A-216.
- Refer to, DTC P0201, P0202, P0203, P0204 – Injector Circuit P.13A-323.

CIRCUIT OPERATION

- Refer to, DTC P0130 Heated Oxygen Sensor (front) Circuit P.13A-216.
- Refer to, DTC P0201, P0202, P0203, P0204 – Injector Circuit P.13A-323.

TECHNICAL DESCRIPTION

- The ECM effects air/fuel ratio feedback control in accordance with the signals from the heater oxygen sensor (front).
- If the heated oxygen sensor (front) has deteriorated, corrections will be made by the heated oxygen sensor (rear).
- DTC P0134 becomes stored in memory if a failure is detected in the above air/fuel ratio feedback control system.

DESCRIPTIONS OF MONITOR METHODS

- Heated oxygen sensor (front) output voltage does not cross 0.5 volt within specified period.

MONITOR EXECUTION

- Continuous

MONITOR EXECUTION CONDITIONS (Other monitor and Sensor)

Other Monitor (There is no temporary DTC stored in memory for the item monitored below)

- Misfire monitor

Sensor (The sensor below is determined to be normal)

- Volume airflow sensor
- Engine coolant temperature sensor
- Intake air temperature sensor
- Barometric pressure sensor
- Throttle position sensor

DTC SET CONDITIONS

Logic Flow Chart

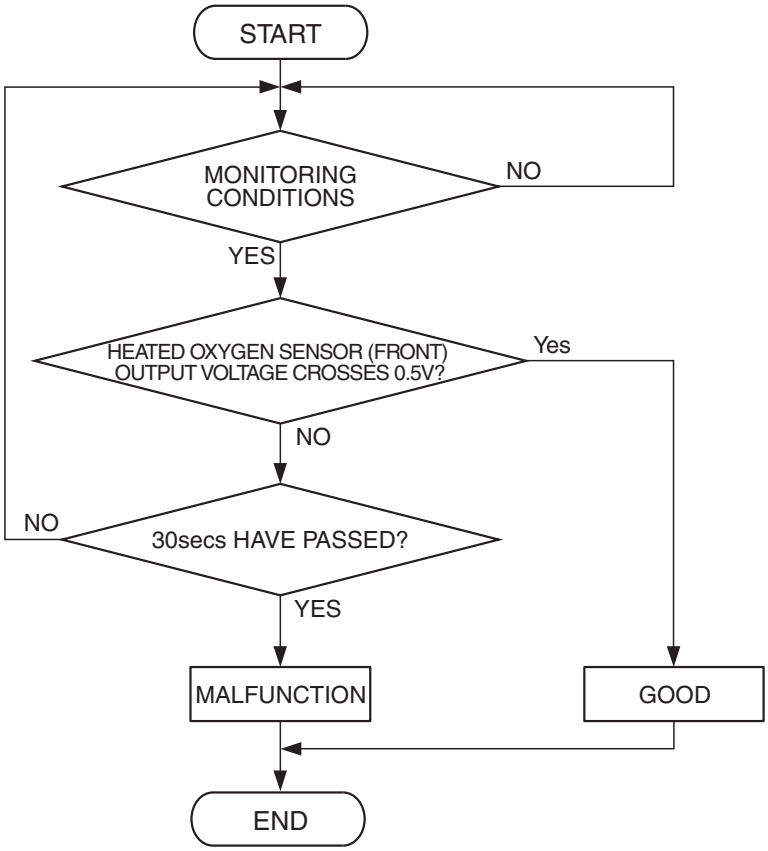

AK203999

Check Conditions

- 20 seconds or more have passed since the engine starting sequence was completed.
- Engine coolant temperature is higher than 7° C (44.6° F).
- Engine speed is higher than 1,200 r/min.
- Volumetric efficiency is higher than 30 percent.
- Throttle position sensor output voltage is lower than 4 volts.
- Except while fuel is being shut off.
- Monitoring time: 30 seconds.

Judgment Criterion

- Heated oxygen sensor (front) output voltage does not get across 0.5 volt within about 30 seconds.

OBD-II DRIVE CYCLE PATTERN

Refer to Diagnostic Function –OBD-II Drive Cycle – Pattern 11 P.13A-12.

TROUBLESHOOTING HINTS (The most likely causes for this code to be set are:)

- Heated oxygen sensor (front) deteriorated.
- Harness damage in heated oxygen sensor (front) output line.
- Heated oxygen sensor (rear) deteriorated.

  NOTE: When the heated oxygen sensor (front) begins to deteriorate, the heated oxygen sensor output voltage will deviate from the voltage when the sensor was new (normally 0.5 volt at stoichiometric ratio). This deviation will be corrected by the heated oxygen sensor (rear).
  If the heated oxygen sensor (rear) responds poorly because it has deteriorated, it will improperly correct the heated oxygen sensor (front). Thus, even when closed loop control is being effected, the fluctuation of the heated oxygen sensor (front) output voltage decreases, without intersecting with 0.5 volt. As a result, there is a possibility of DTC P0134 becoming registered.
- Open circuit in injector.

- Harness damage in injector circuit.
- Connector damage.
- ECM failed.
- Exhaust leak.
- Air drawn in from gaps in gasket, seal, etc.
- Incorrect fuel pressure.

DIAGNOSIS

Required Special Tools:

- MB991958: Scan Tool (M.U.T.-III Sub Assembly)
  - MB991824: V.C.I.
  - MB991827: USB Cable
  - MB991911: Main Harness B
- MD998464: Test Harness

STEP 1. Using scan tool MB991958, check data list item 59: Heated Oxygen Sensor (rear).

⚠ CAUTION

To prevent damage to scan tool MB991958, always turn the ignition switch to the "LOCK" (OFF) position before connecting or disconnecting scan tool MB991958.

(1) Connect scan tool MB991958 to the data link connector.
(2) Start the engine and run at idle.
(3) Set scan tool MB991958 to the data reading mode for item 59, Heated Oxygen Sensor (rear).
  - Warm up the engine. When the engine is revved, the output voltage should repeat 0 volt and 0.6 to 1.0 volt alternately.

(4) Turn the ignition switch to the "LOCK" (OFF) position.

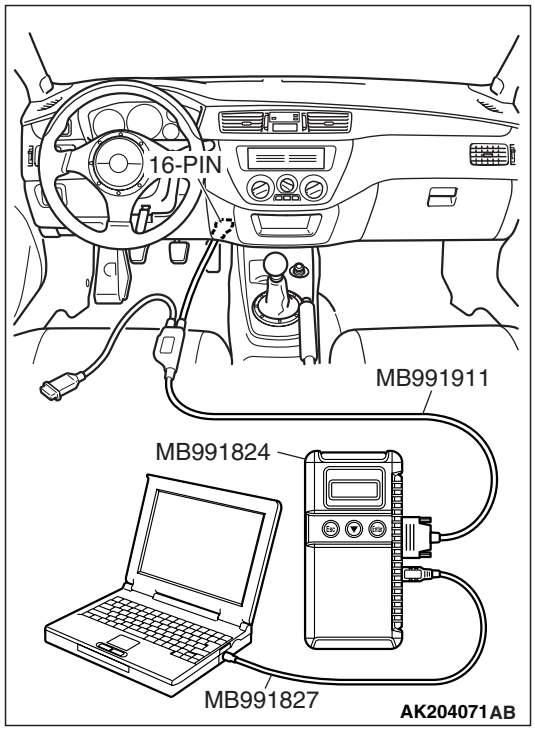

Q: Is the sensor operating properly?

YES : Go to Step 2.
NO : Refer to, DTC P0136 –Heated Oxygen Sensor Circuit (sensor 2) P.13A-258, DTC P0137 –Heated Oxygen Sensor Circuit Low Voltage (sensor 2) P.13A-269, DTC P0138 –Heated Oxygen Sensor Circuit High Voltage (sensor 2) P.13A-275, DTC P0139 –Heated Oxygen Sensor Circuit Slow Response (sensor 2) P.13A-279.

STEP 2. Check for exhaust leaks.

Q: Are there any abnormalities?

YES : Repair it. Then go to Step 12.
NO : Go to Step 3.

STEP 3. Check for intake system vacuum leaks.

Q: Are there any abnormalities?

YES : Repair it. Then go to Step 12.
NO : Go to Step 4.

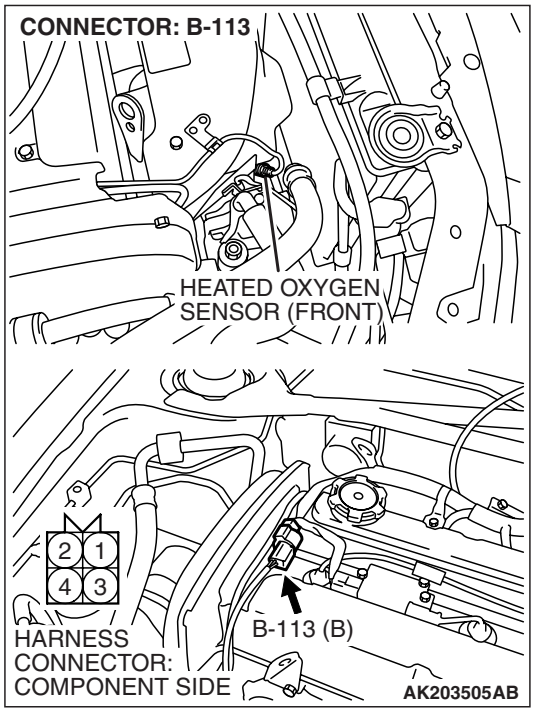

STEP 4. Check harness connector B-113 at the heated oxygen sensor (front) for damage.

Q: Is the harness connector in good condition?

YES : Go to Step 5.

NO : Repair or replace it. Refer to GROUP 00E, Harness Connector Inspection P.00E-2. Then go to Step 12.

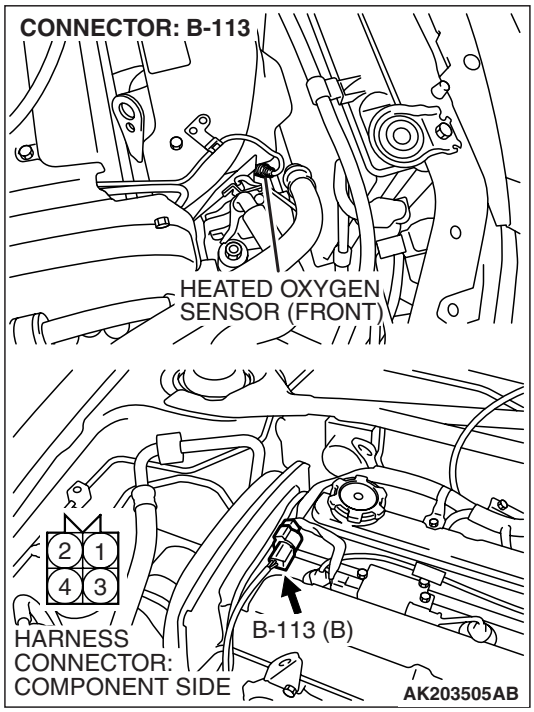

STEP 5. Check the heated oxygen sensor (front).

(1) Disconnect the heated oxygen sensor (front) connector B-113 and connect test harness special tool, MD998464, to the connector on the heated oxygen sensor (front) side.

(2) Warm up the engine until engine coolant temperature reaches 80° C (176° F) or higher.

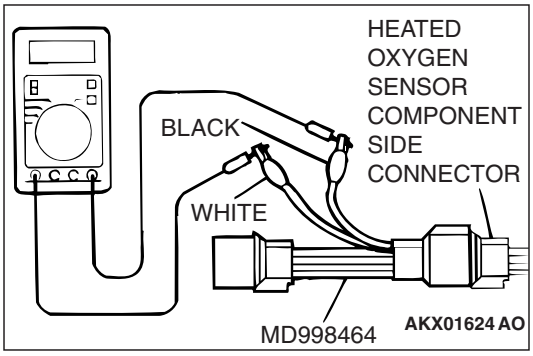

(3) Perform a racing for 5 minutes or more with the engine speed of 4,500 r/min.

(4) Connect a digital voltage meter between terminal No. 2 (black clip) and terminal No. 4 (white clip).

(5) While repeatedly revving the engine, measure the heated oxygen sensor (front) output voltage.

Standard value: 0.6 – 1.0 volt

⚠ CAUTION

- **Be very careful when connecting the jumper wires; incorrect connection can damage the heated oxygen sensor.**
- **Be careful the heater is broken when voltage of beyond 8 volts is applied to the heated oxygen sensor heater.**

  NOTE: If the sufficiently high temperature [of approximate 400°C (752°F) or more] is not reached although the heated oxygen sensor is normal, the output voltage would be possibly low although the rich air/fuel ratio. Therefore, if the output voltage is low, use a jumper wire to connect the terminal No.1 (red clip) and the terminal No. 3 (blue clip) of the heated oxygen sensor with the positive terminal and the negative terminal of 8 volts power supply respectively, then check again.

Q: Is the measured voltage between 0.6 and 1.0 volt?

YES : Go to Step 6.

NO : Replace the heated oxygen sensor (front). Then go to Step 12.

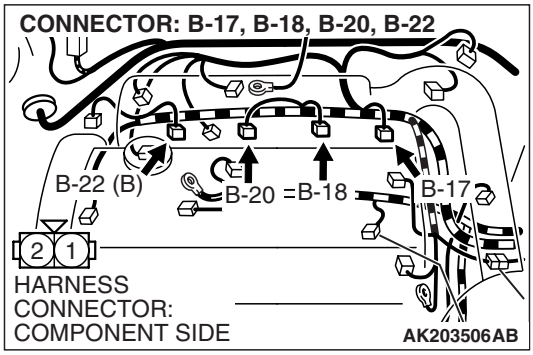

STEP 6. Check harness connectors B-17, B-18, B- 20, B- 22 at injector for damage.

Q: Is the harness connector in good condition?

YES : Go to Step 7.

NO : Repair or replace it. Refer to GROUP 00E, Harness Connector Inspection P.00E-2. Then go to Step 12.

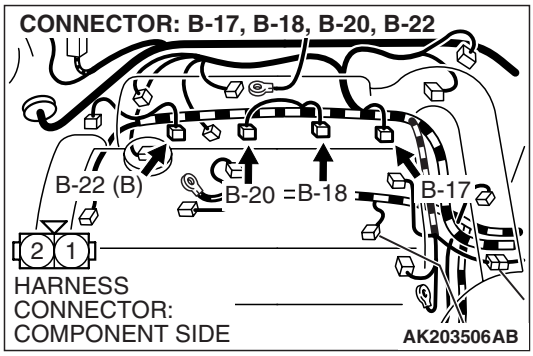

STEP 7. Check the injector.

(1) Disconnect each injector connector.

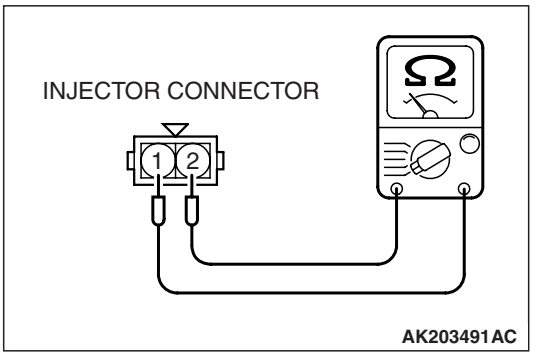

(2) Measure the resistance between injector side connector terminal No. 1 and No. 2.

Standard value: 2 – 3 ohms [at 20° C (68° F)]

Q: Is the measured resistance between 2 and 3 ohms [at 20° C (68° F)]?

YES : Go to Step 8.

NO : Replace the injector. Then go to Step 12.

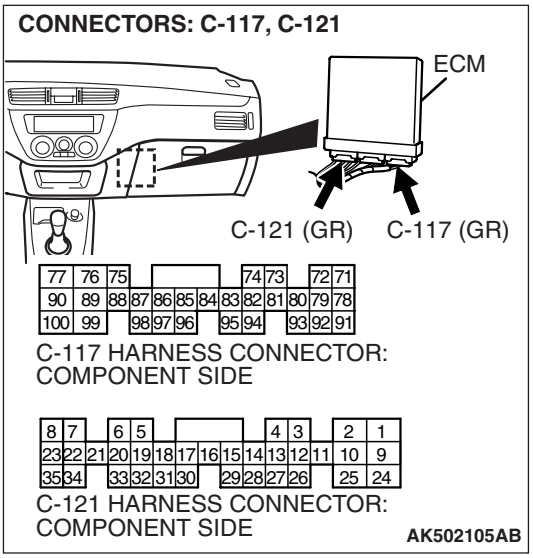

STEP 8. Check harness connectors C-115, C-121 at ECM for damage.

Q: Is the harness connector in good condition?

YES : Go to Step 9.

NO : Repair or replace it. Refer to GROUP 00E, Harness Connector Inspection P.00E-2. Then go to Step 12.

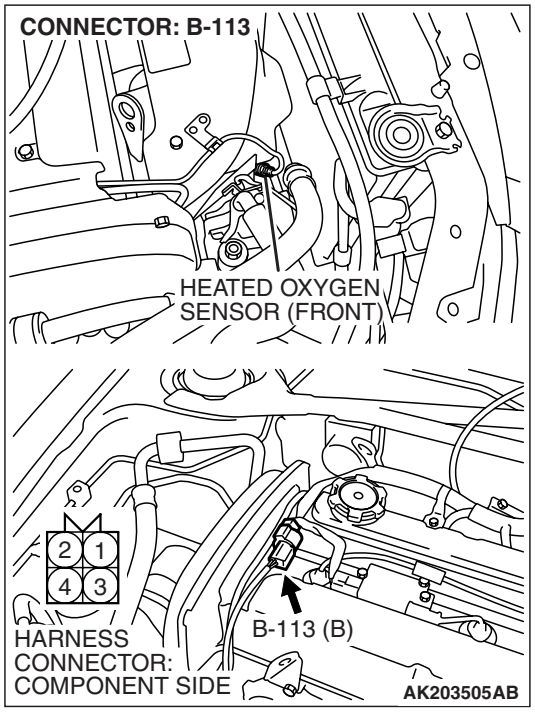

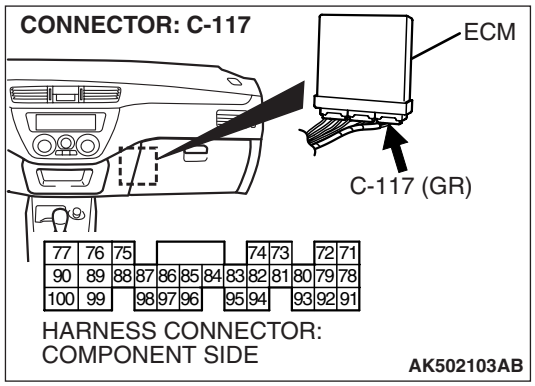

STEP 9. Check for harness damage between heated oxygen sensor (front) connector B-113 (terminal No. 4) and ECM connector C-117 (terminal No. 71).

Q: Is the harness wire in good condition?

YES : Go to Step 10.

NO : Repair it. Then go to Step 12.

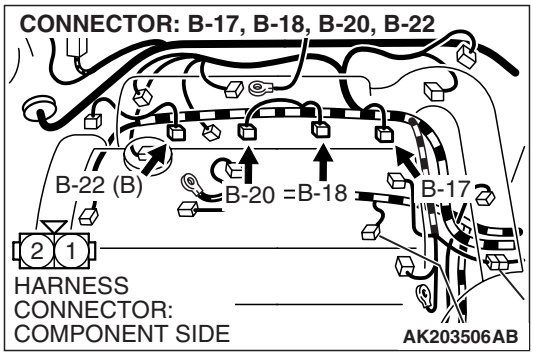

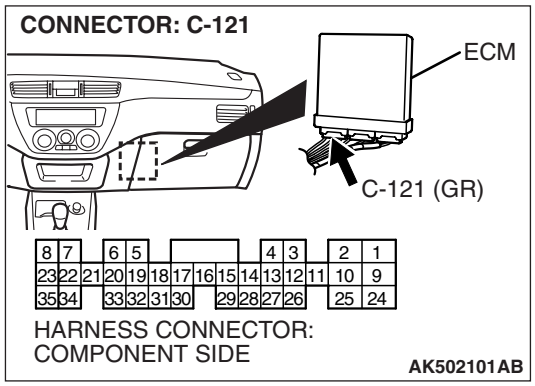

STEP 10. Check for harness damage between injector connectors B-17, B-18, B-20, B-22 and ECM connector C-121.

a. Check the harness wire between injector connector B-22 (terminal No. 2) and ECM connector C-121 (terminal No. 1) at No. 1 cylinder.
b. Check the harness wire between injector connector B-20 (terminal No. 2) and ECM connector C-121 (terminal No. 9) at No. 2 cylinder.
c. Check the harness wire between injector connector B-18 (terminal No. 2) and ECM connector C-121 (terminal No. 24) at No. 3 cylinder.
d. Check the harness wire between injector connector B-17 (terminal No. 2) and ECM connector C-121 (terminal No. 2) at No. 4 cylinder.

Q: Is the harness wire in good condition?

YES : Go to Step 11.
NO : Repair it. Then go to Step 12.

STEP 11. Check the fuel pressure.

Refer to GROUP 13A, Oh-vehicle Service –Fuel Pressure Test P.13A-865.

Q: Is the fuel pressure normal?

YES : Replace the ECM. Then go to Step 12.
NO : Repair it. Then go to Step 12.

STEP 12. Test the OBD-II drive cycle.

(1) Carry out a test drive with the drive cycle pattern. Refer to GROUP 13A, Diagnostic Function –OBD-II Drive Cycle – Pattern 11 P.13A-12.
(2) Check the diagnostic trouble code (DTC).

Q: Is DTC P0134 set?

YES : Retry the troubleshooting.
NO : The inspection is complete.

DTC P0136: Heated Oxygen Sensor Circuit <SENSOR 2>

Heated Oxygen Sensor (rear) Circuit

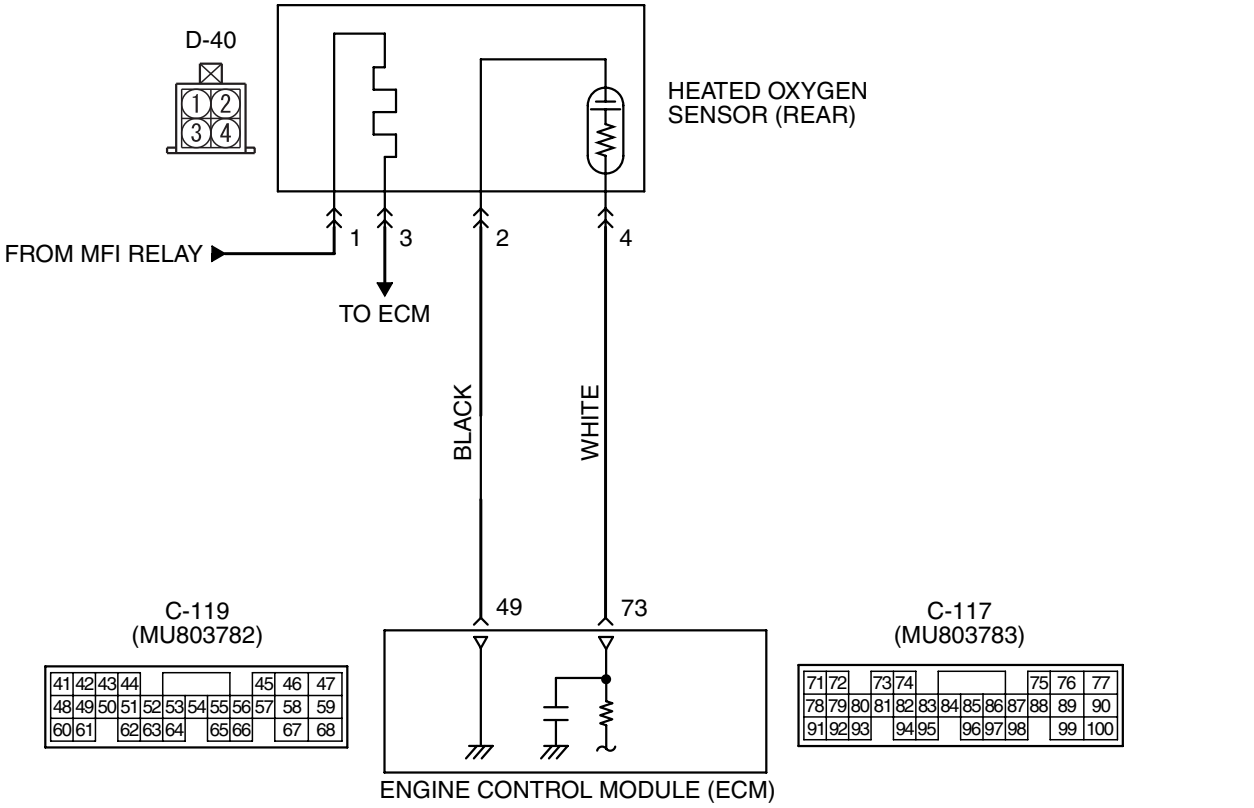

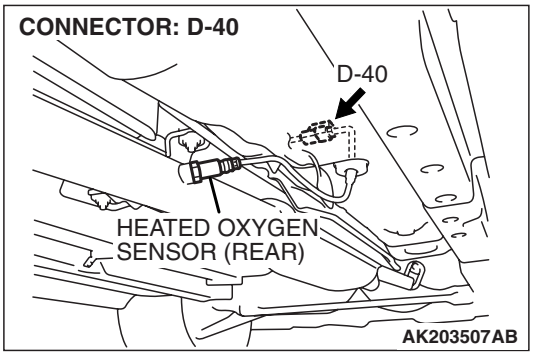

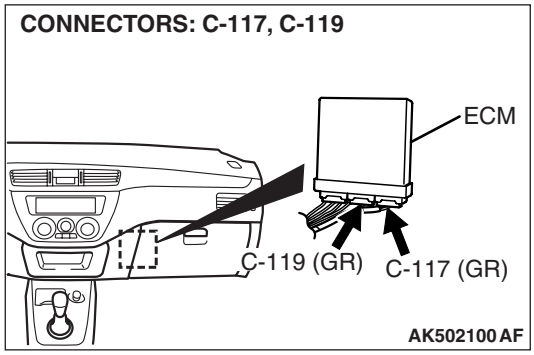

CIRCUIT OPERATION

- A voltage corresponding to the oxygen concentration in the exhaust gas is sent to the ECM (terminal No. 73) from the output terminal (terminal No. 4) of the heated oxygen sensor (rear).
- Terminal No. 2 of the heated oxygen sensor (rear) is grounded with ECM (terminal No. 49).

TECHNICAL DESCRIPTION

- The output signal of the heated oxygen sensor (front) is compensated by the output signal of the heated oxygen sensor (rear).
- The ECM checks for an open circuit in the heated oxygen sensor (rear) output line.

DESCRIPTIONS OF MONITOR METHODS

- Heated oxygen sensor (rear) circuit is switched to 5 volts intentionally when oxygen sensor output is low, and detects the malfunction if the output voltage changes to equal or greater than 4.5 volts. The above procedure is repeated when oxygen sensor is inactive.

MONITOR EXECUTION

- Continuous

MONITOR EXECUTION CONDITIONS (Other monitor and Sensor)

Other Monitor (There is no temporary DTC stored in memory for the item monitored below)

- Heated oxygen sensor heater (front) monitor
- Heated oxygen sensor heater (rear) monitor
- Air/fuel ratio feedback monitor

Sensor (The sensor below is determined to be normal)

- Volume airflow sensor
- Engine coolant temperature sensor
- Intake air temperature sensor
- Barometric pressure sensor

DTC SET CONDITIONS

Logic Flow Chart

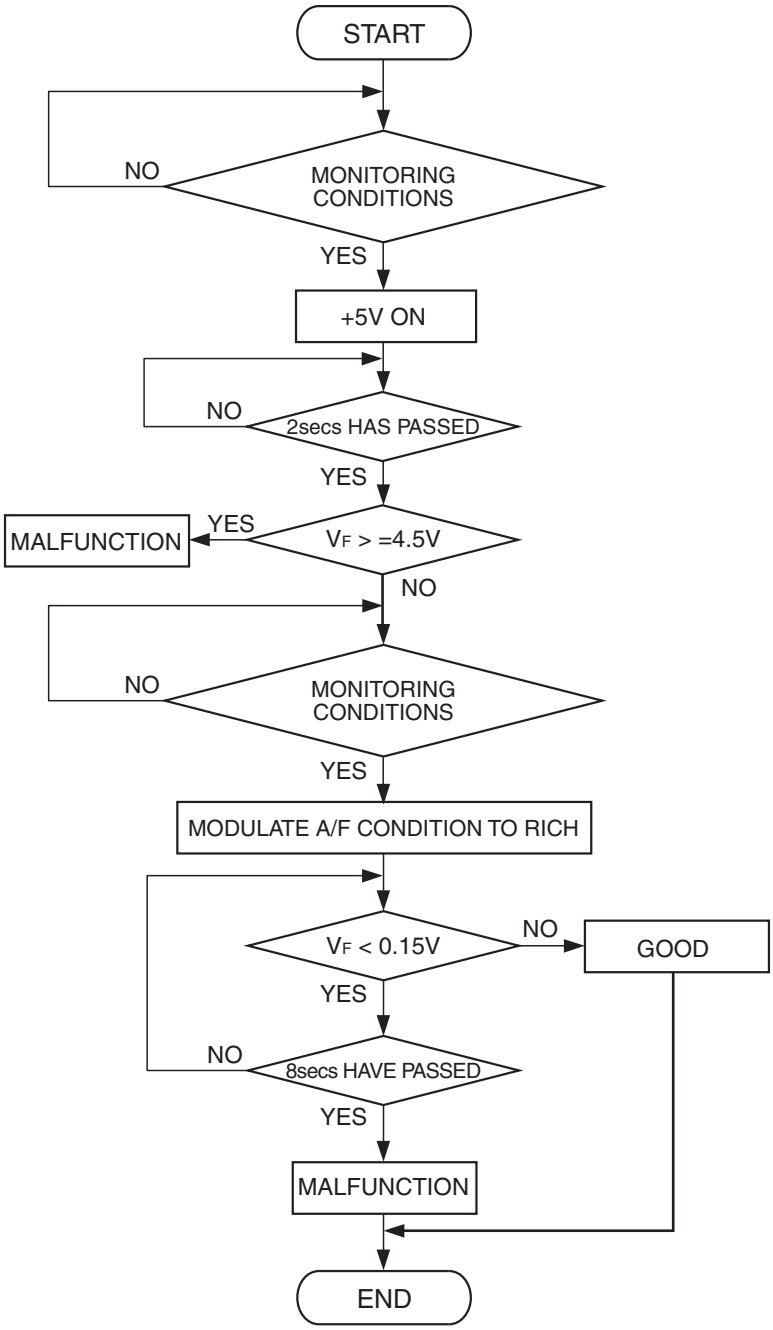

AK401414

Check Conditions

- 3 minutes or more have passed since the engine starting sequence was completed.
- Heated oxygen sensor (rear) signal voltage has continued to be 0.15 volt or lower.
- Engine coolant temperature is higher than 76° C (169° F).
- Engine speed is higher than 1,200 r/min.
- Volumetric efficiency is higher than 25 percent.
- Monitoring time: 7 seconds.

TSB Revision

Judgment Criterion

- Input voltage supplied to the ECM interface circuit is higher than 4.5 volts when 5 volts is applied to the heated oxygen sensor (rear) output line via a resistor.

OBD-II DRIVE CYCLE PATTERN

Refer to Diagnostic Function –OBD-II Drive Cycle – Pattern 11 P.13A-12.

TROUBLESHOOTING HINTS (The most likely causes for this code to be set are:)

- Heated oxygen sensor (rear) failed.
- Open or short circuit in heated oxygen sensor (rear) output line, or harness damage.
- Open circuit in heated oxygen sensor (rear) ground line, or harness damage.
- Connector damage.
- ECM failed.

DIAGNOSIS

Required Special Tools:

- MB991958: Scan Tool (M.U.T.-III Sub Assembly)
  - MB991824: V.C.I.
  - MB991827: USB Cable
  - MB991911: Main Harness B
- MB991658: Test Harness Set

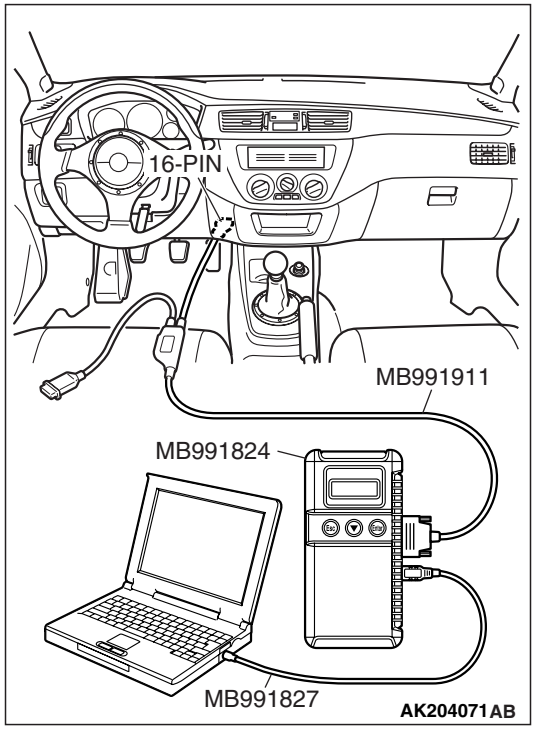

STEP 1. Using scan tool MB991958, check data list item 59: Heated Oxygen Sensor (rear).

⚠ CAUTION

To prevent damage to scan tool MB991958, always turn the ignition switch to the "LOCK" (OFF) position before connecting or disconnecting scan tool MB991958.

(1) Connect scan tool MB991958 to the data link connector.
(2) Start the engine and run at idle.
(3) Set scan tool MB991958 to the data reading mode for item 59, Heated Oxygen Sensor (rear).
  a. Transaxle: 2nd speed
  b. Drive with wide open throttle
  c. Engine: 3,500 r/min or more
  - The output voltage should be between 0.6 and 1.0 volt.

(4) Turn the ignition switch to the "LOCK" (OFF) position.

Q: Is the sensor operating properly?

YES : It can be assumed that this malfunction is intermittent. Refer to GROUP 00, How to Use Troubleshooting/Inspection Service Points –How to Cope with Intermittent Malfunctions P.00-13.

NO : Go to Step 2.

STEP 2. Measure the sensor output voltage at heated oxygen sensor (rear) connector D-40 by backprobing.

(1) Do not disconnect connector D-40.
(2) Start the engine and run at idle.

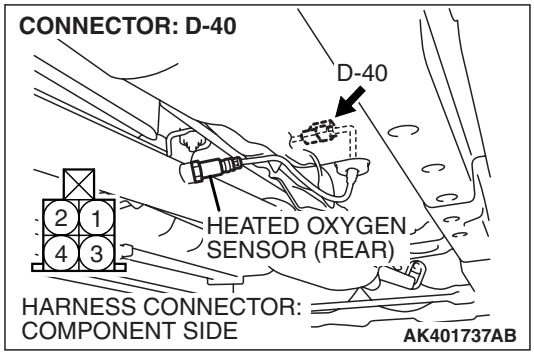

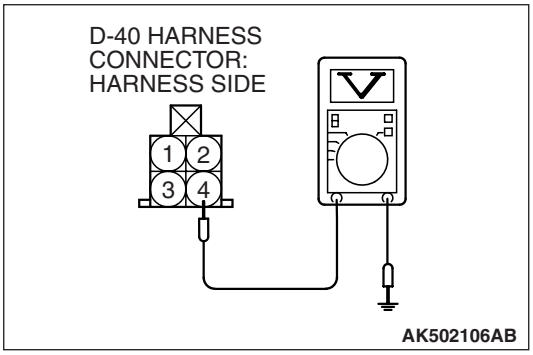

(3) Measure the voltage between terminal No. 4 and ground by backprobing.
  a. Transaxle: 2nd speed
  b. Drive with wide open throttle
  c. Engine: 3,500 r/min or more
  - The output voltage should be between 0.6 and 1.0 volt.

(4) Turn the ignition switch to the "LOCK" (OFF) position.

Q: Is the measured voltage within the specified range?

YES : Go to Step 3.
NO : Go to Step 7.

STEP 3. Measure the sensor output voltage at ECM connector C-117 by backprobing.

(1) Do not disconnect connector C-117.
(2) Start the engine and run at idle.

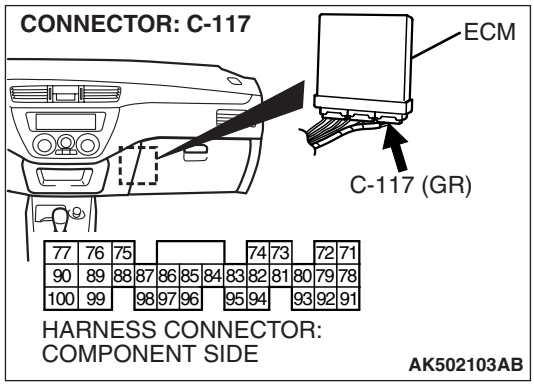

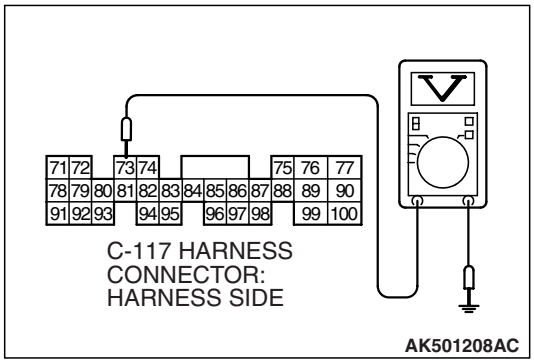

(3) Measure the voltage between terminal No. 73 and ground by backprobing.
  a. Transaxle: 2nd speed
  b. Drive with wide open throttle
  c. Engine: 3,500 r/min or more
  - The output voltage should be between 0.6 and 1.0 volt.

(4) Turn the ignition switch to the "LOCK" (OFF) position.

Q: Is the measured voltage within the specified range?

YES : Go to Step 4.
NO : Go to Step 6.

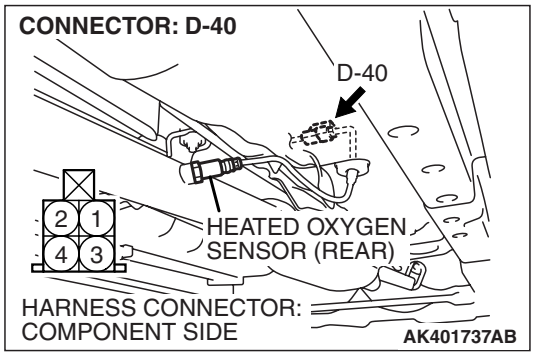

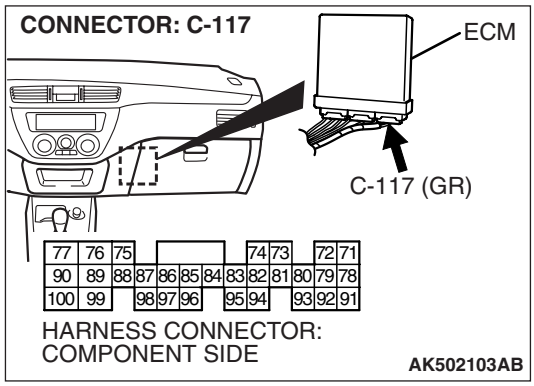

STEP 4. Check harness connector D-40 at heated oxygen sensor (rear) and harness connector C-117 at ECM for damage.

Q: Is the harness connector in good condition?

YES : Go to Step 5.

NO : Repair or replace it. Refer to GROUP 00E, Harness Connector Inspection P.00E-2. Then go to Step 14.

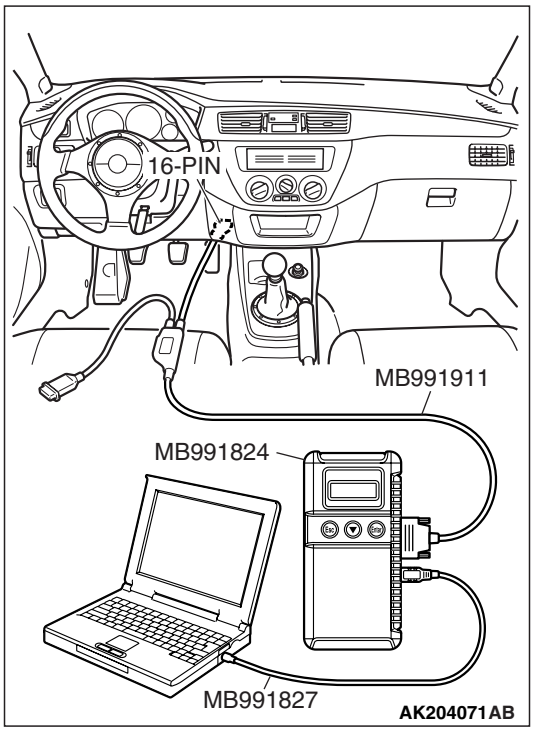

STEP 5. Using scan tool MB991958, check data list item 59: Heated Oxygen Sensor (rear).

⚠ CAUTION

To prevent damage to scan tool MB991958, always turn the ignition switch to the "LOCK" (OFF) position before connecting or disconnecting scan tool MB991958.

(1) Connect scan tool MB991958 to the data link connector.
(2) Start the engine and run at idle.
(3) Set scan tool MB991958 to the data reading mode for item 59, Heated Oxygen Sensor (rear).
  a. Transaxle: 2nd speed
  b. Drive with wide open throttle
  c. Engine: 3,500 r/min or more
  - The output voltage should be between 0.6 and 1.0 volt.
(4) Turn the ignition switch to the "LOCK" (OFF) position.

Q: Is the sensor operating properly?

YES : It can be assumed that this malfunction is intermittent. Refer to GROUP 00, How to Use Troubleshooting/Inspection Service Points –How to Cope with Intermittent Malfunctions P.00-13.

NO : Replace the ECM. Then go to Step 14.

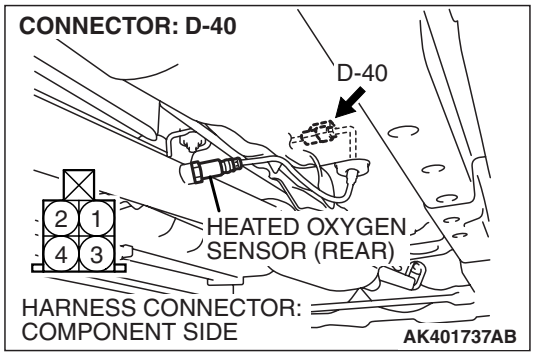

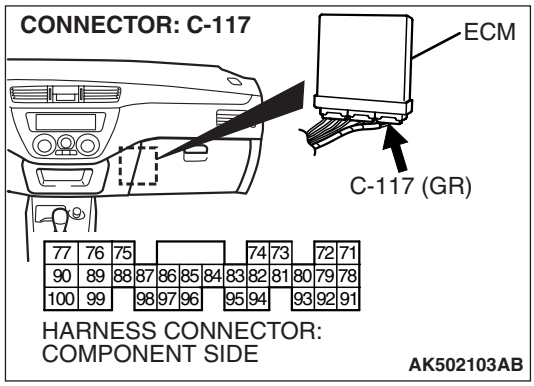

STEP 6. Check harness connector D-40 at heated oxygen sensor (rear) and harness connector C-117 at ECM for damage.

Q: Is the harness connector in good condition?

YES : Repair harness wire between heated oxygen sensor (rear) connector D-40 (terminal No. 4) and ECM connector C-117 (terminal No. 73) because of open circuit or harness damage. Then go to Step 14.

NO : Repair or replace it. Refer to GROUP 00E, Harness Connector Inspection P.00E-2. Then go to Step 14.

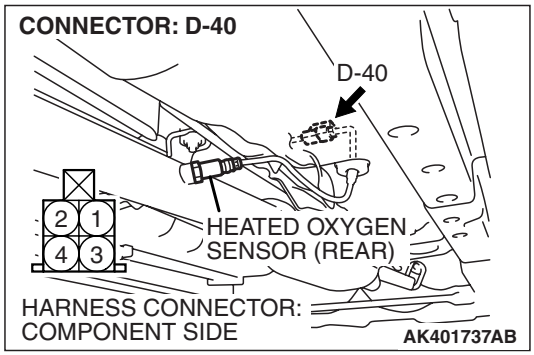

STEP 7. Check harness connector D-40 at heated oxygen sensor (rear) for damage.

Q: Is the harness connector in good condition?

YES : Go to Step 8.

NO : Repair or replace it. Refer to GROUP 00E, Harness Connector Inspection P.00E-2. Then go to Step 14.

STEP 8. Check for continuity at heated oxygen sensor (rear) harness side connector D-40.

(1) Disconnect connector D-40 and measure at the harness side.

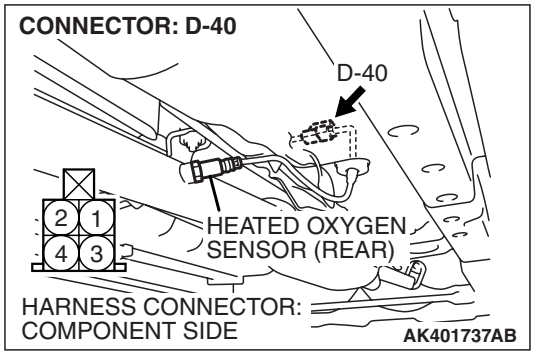

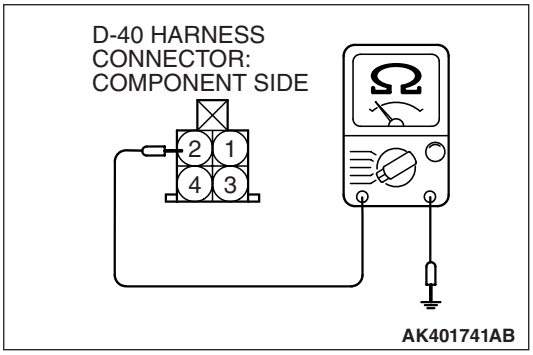

(2) Check for the continuity between terminal No. 2 and ground.
- Should be less than 2 ohms.

Q: Does continuity exist?

YES : Go to Step 11.
NO : Go to Step 9.

STEP 9. Check harness connector C-119 at ECM for damage.

Q: Is the harness connector in good condition?

YES : Go to Step 10.
NO : Repair or replace it. Refer to GROUP 00E, Harness Connector Inspection P.00E-2. Then go to Step 14.

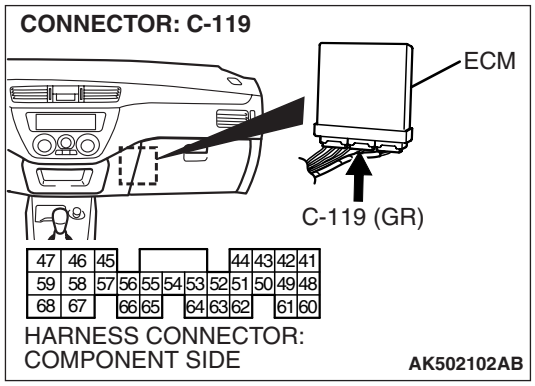

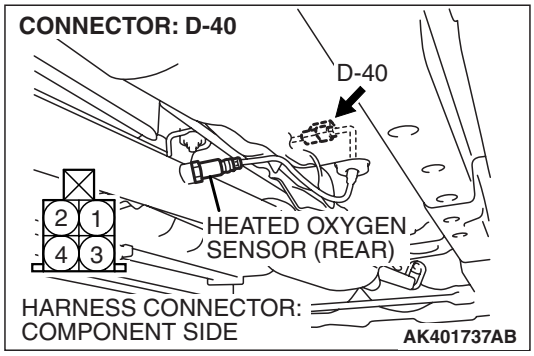

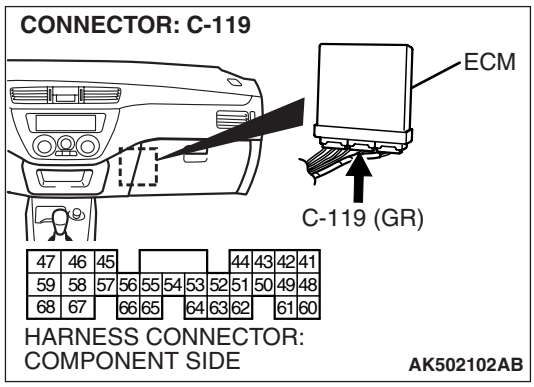

STEP 10. Check for open circuit and harness damage between heated oxygen sensor (rear) connector D-40 (terminal No. 2) and ECM connector C-119 (terminal No. 49).

Q: Is the harness wire in good condition?

YES : Replace the ECM. Then go to Step 14.

NO : Repair it. Then go to Step 14.

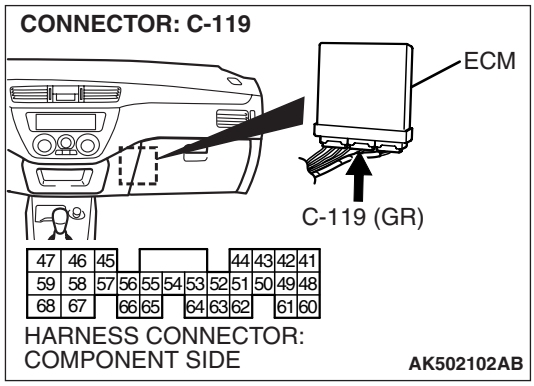

STEP 11. Check harness connector C-119 at ECM for damage.

Q: Is the harness connector in good condition?

YES : Go to Step 12.

NO : Repair or replace it. Refer to GROUP 00E, Harness Connector Inspection P.00E-2. Then go to Step 14.

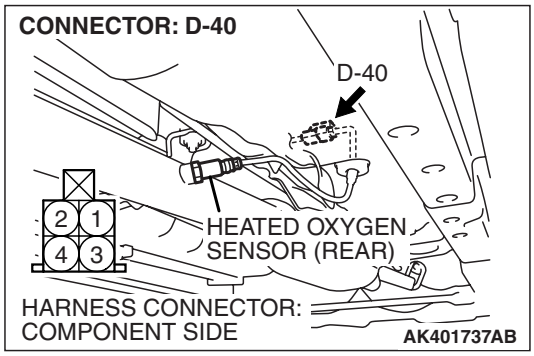

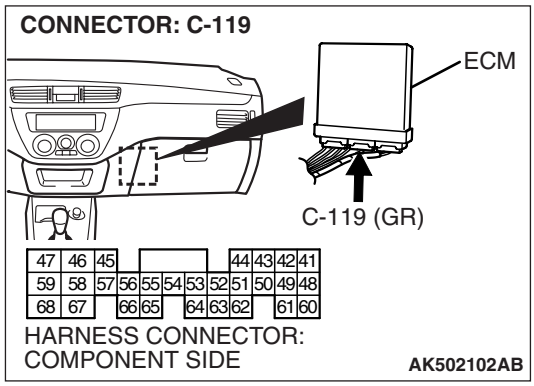

STEP 12. Check for harness damage between heated oxygen sensor (rear) connector D-40 (terminal No. 2) and ECM connector C-119 (terminal No. 49).

Q: Is the harness wire in good condition?

YES : Go to Step 13.

NO : Repair it. Then go to Step 14.

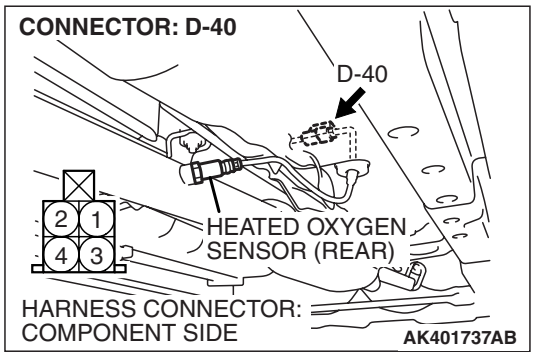

STEP 13. Check the heated oxygen sensor (rear).

(1) Disconnect the heated oxygen sensor (rear) connector D-40 and connect test harness special tool, MB991658, to the connector on the heated oxygen sensor (rear) side.
(2) Warm up the engine until engine coolant temperature reaches 80° C (176° F) or higher.
(3) Drive at 50 km/h (31 mph) or more for 10 minutes.

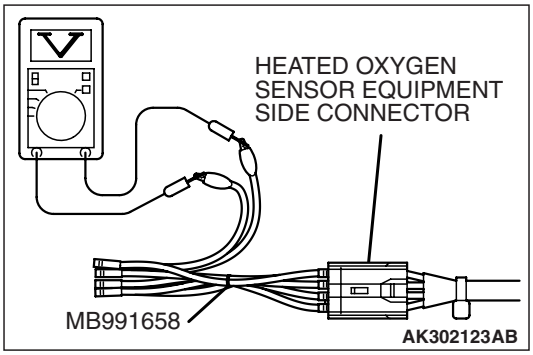

(4) Connect a digital voltage meter between terminal No. 2 and terminal No. 4.
(5) Measure the output voltage of the heated oxygen sensor under the following driving.
- Transaxle: 2nd speed
- Drive with wide open throttle
- Engine: 3,500 r/min or more

Standard value: 0.6 – 1.0 volt

NOTE: If the sufficiently high temperature [of approximate 400 °C (752 °F) or more] is not reached although the heated oxygen sensor is normal, the output voltage would be possibly low although the rich air/fuel ratio.

Q: Is the voltage between 0.6 and 1.0 volt?

YES : Replace the ECM. Then go to Step 14.
NO : Replace the heated oxygen sensor (rear). Then go to Step 14.

STEP 14. Test the OBD-II drive cycle.

(1) Carry out a test drive with the drive cycle pattern. Refer to GROUP 13A, Diagnostic Function –OBD-II Drive Cycle – Pattern 11 P.13A-12.
(2) Check the diagnostic trouble code (DTC).

Q: Is DTC P0136 set?

YES : Retry the troubleshooting.
NO : The inspection is complete.

DTC P0137: Heated Oxygen Sensor Circuit Low Voltage <SENSOR 2>

Heated Oxygen Sensor (rear) Circuit

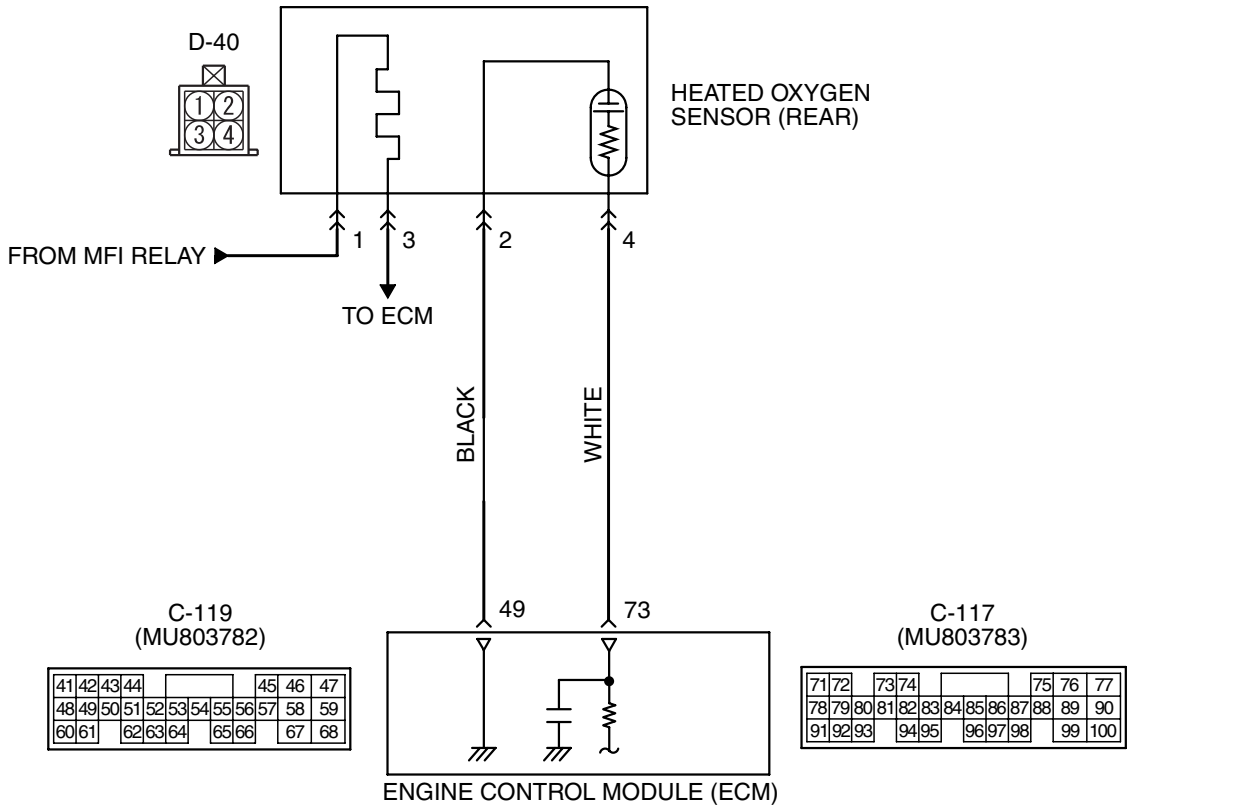

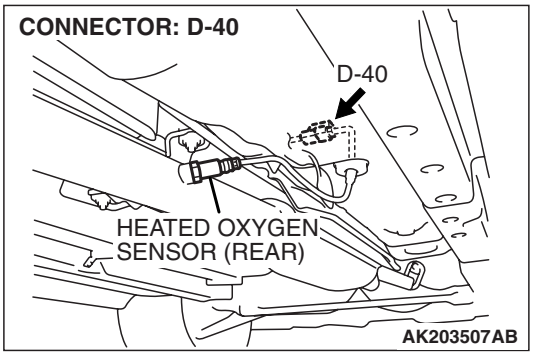

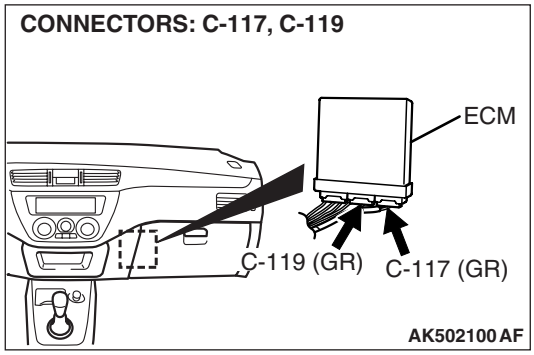

CIRCUIT OPERATION

- A voltage corresponding to the oxygen concentration in the exhaust gas is sent to the ECM (terminal No. 73) from the output terminal (terminal No. 4) of the heated oxygen sensor (rear).
- Terminal No. 2 of the heated oxygen sensor (rear) is grounded with ECM (terminal No. 49).

TECHNICAL DESCRIPTION

- The output signal of the heated oxygen sensor (front) is compensated by the output signal of the heated oxygen sensor (rear).
- The ECM checks for an open circuit in the heated oxygen sensor (rear) output line.

DESCRIPTIONS OF MONITOR METHODS

- Heated oxygen sensor (rear) output voltage stays low when air/fuel ratio is forced to be rich. The above procedure is repeated when oxygen sensor is inactive.

MONITOR EXECUTION

- Continuous

MONITOR EXECUTION CONDITIONS (Other monitor and Sensor)

Other Monitor (There is no temporary DTC stored in memory for the item monitored below)

- Heated oxygen sensor heater (front) monitor
- Heated oxygen sensor heater (rear) monitor
- Air/fuel ratio feedback monitor

Sensor (The sensor below is determined to be normal)

- Volume airflow sensor
- Engine coolant temperature sensor
- Intake air temperature sensor
- Barometric pressure sensor

DTC SET CONDITIONS

Logic Flow Chart

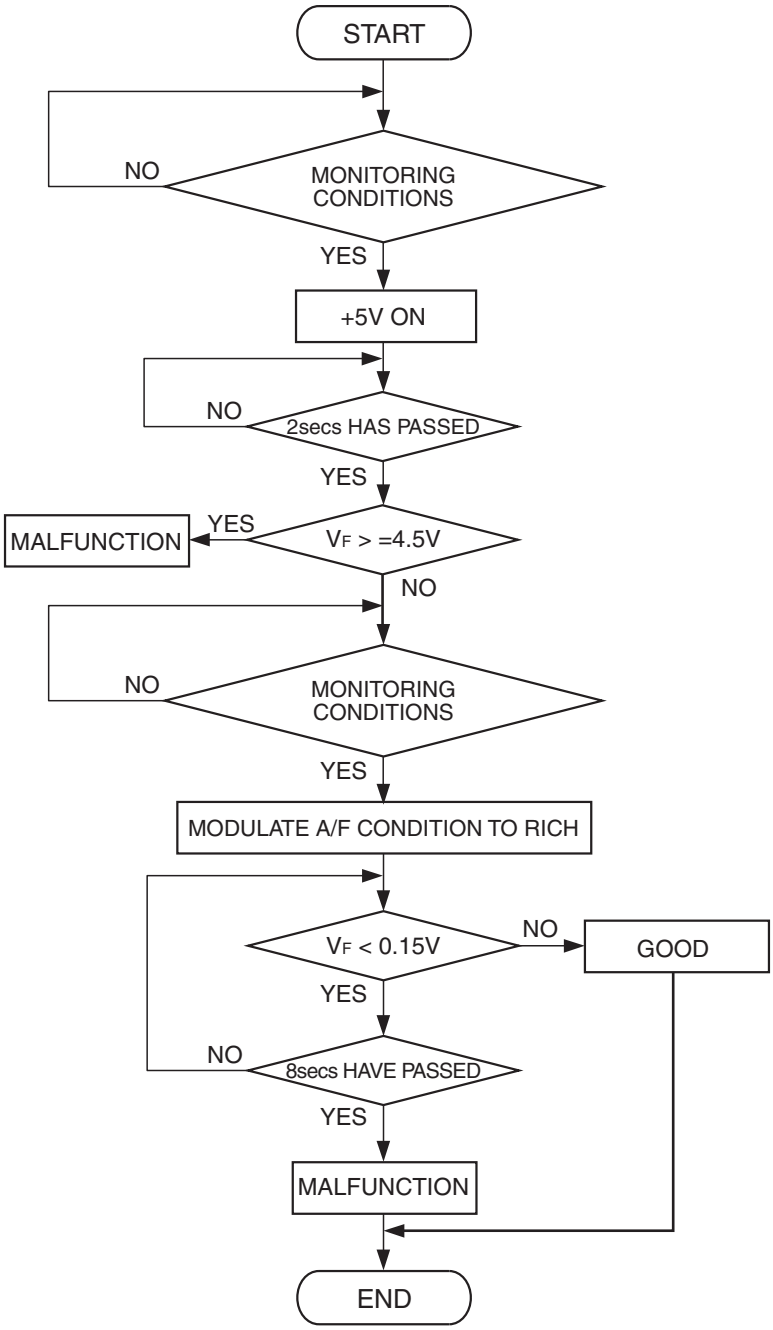

AK401414

Check Conditions

- After 2 seconds or more pass from the time when the monitor determines normally for detecting an open circuit.
- Heated oxygen sensor (rear) signal voltage has continued to be 0.15 volt or lower.
- Engine coolant temperature is higher than 76° C (169° F).
- Volume airflow sensor output frequency is 56 Hz or more.
- At least 20 seconds have passed since fuel shut off control was canceled.
- Monitoring time: 8 seconds.

TSB Revision

Judgement Criterion

- Making the air/fuel ratio 15 percent for 8 seconds richer does not result in raising the heated oxygen sensor (rear) output voltage beyond 0.15 volt.

OBD-II DRIVE CYCLE PATTERN

Refer to Diagnostic Function –OBD-II Drive Cycle – Pattern 11 P.13A-12.

TROUBLESHOOTING HINTS (The most likely causes for this code to be set are:)

- Heated oxygen sensor (rear) failed.
- Short circuit in heated oxygen sensor (rear) output line.
- Connector damage.
- ECM failed.

DIAGNOSIS

Required Special Tools:

- MB991958: Scan Tool (M.U.T.-III Sub Assembly)
  - MB991824: V.C.I.
  - MB991827: USB Cable
  - MB991911: Main Harness B
- MB991658: Test Harness Set

STEP 1. Using scan tool MB991958, check data list item 59: Heated Oxygen Sensor (rear).

⚠ CAUTION

To prevent damage to scan tool MB991958, always turn the ignition switch to the "LOCK" (OFF) position before connecting or disconnecting scan tool MB991958.

(1) Connect scan tool MB991958 to the data link connector.
(2) Start the engine and run at idle.
(3) Set scan tool MB991958 to the data reading mode for item 59, Heated Oxygen Sensor (rear).
  a. Transaxle: 2nd speed
  b. Drive with wide open throttle
  c. Engine: 3,500 r/min or more
  - The output voltage should be between 0.6 and 1.0 volt.

(4) Turn the ignition switch to the "LOCK" (OFF) position.

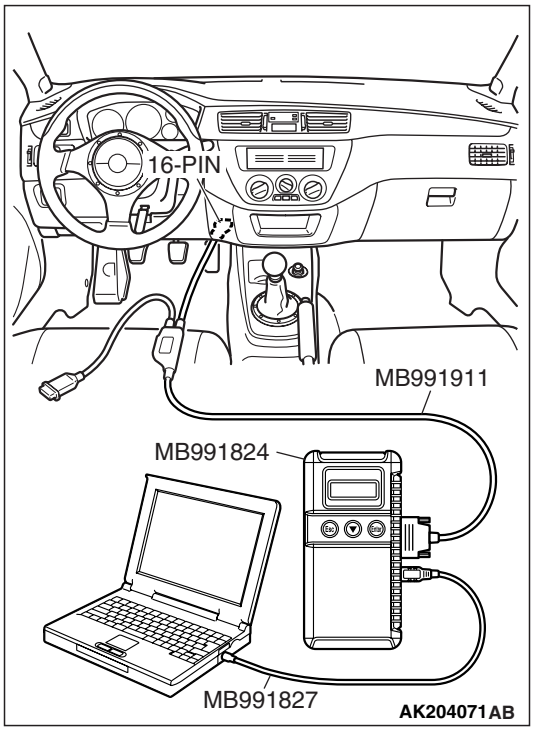

Q: Is the sensor operating properly?

YES : It can be assumed that this malfunction is intermittent. Refer to GROUP 00, How to Use Troubleshooting/Inspection Service Points –How to Cope with Intermittent Malfunctions P.00-13.

NO : Go to Step 2.

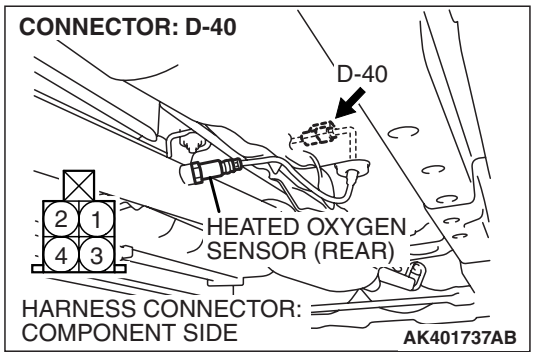

STEP 2. Check the heated oxygen sensor (rear).

(1) Disconnect the heated oxygen sensor (rear) connector D-40 and connect test harness special tool, MB991658, to the connector on the heated oxygen sensor (rear) side.
(2) Warm up the engine until engine coolant temperture reaches 80° C (176° F) or higher.
(3) Drive at 50 km/h (31 mph) or more for 10 minutes.

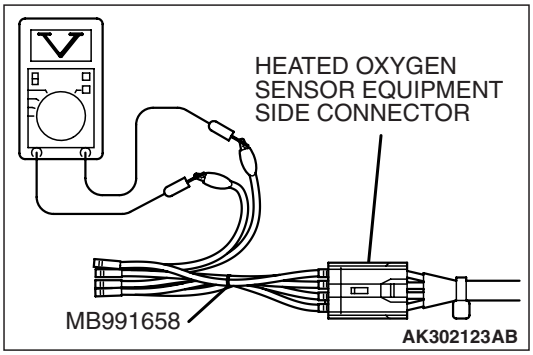

(4) Connect a digital voltage meter between terminal No. 2 and terminal No. 4.
(5) Measure the output voltage of the heated oxygen sensor under the following driving.
- Transaxle: 2nd speed
- Drive with wide open throttle
- Engine: 3,500 r/min or more

Standard value: 0.6 – 1.0 volt

NOTE: If the sufficiently high temperature [of approximate 400°C (752°F) or more] is not reached although the heated oxygen sensor is normal, the output voltage would be possibly low although the rich air/fuel ratio.

Q: Is the measured voltage between 0.6 and 1.0 volt?

YES : Go to Step 3.
NO : Replace the heated oxygen sensor (rear). Then go to Step 5.

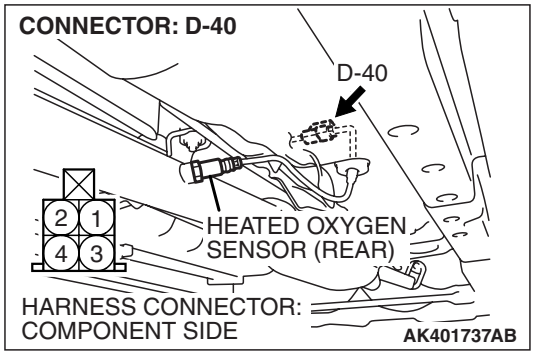

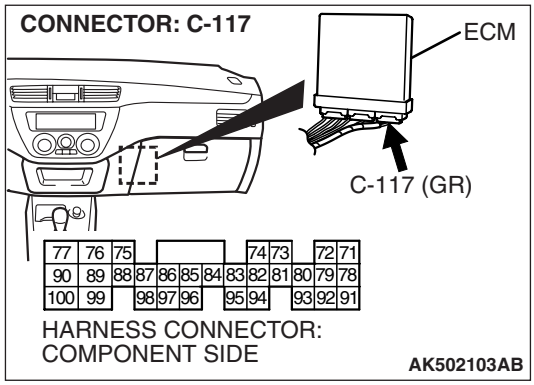

STEP 3. Check harness connector D-40 at heated oxygen sensor (rear) and connector C-117 at ECM for damage.

Q: Is the harness connector in good condition?

YES : Go to Step 4.

NO : Repair or replace it. Refer to GROUP 00E, Harness Connector Inspection P.00E-2. Then go to Step 5.

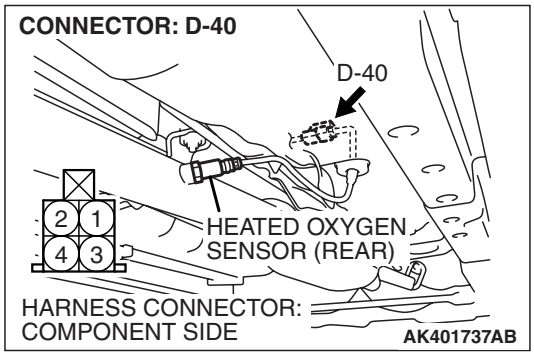

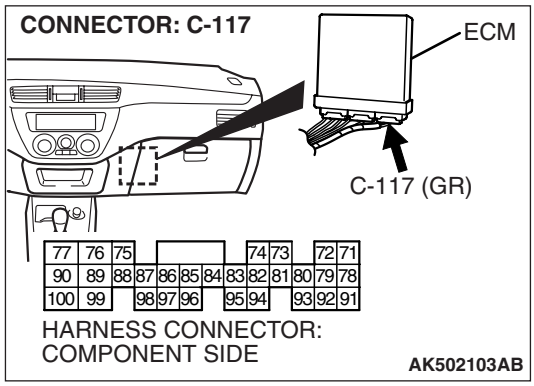

STEP 4. Check for short circuit to ground between heated oxygen sensor (rear) connector D-40 (terminal No. 4) and ECM connector C-117 (terminal No. 73).

Q: Is the harness wire in good condition?

YES : Replace the ECM. Then go to Step 5.

NO : Repair it. Then go to Step 5.

STEP 5. Test the OBD-II drive cycle.

(1) Carry out a test drive with the drive cycle pattern. Refer to GROUP 13A, Diagnostic Function –OBD-II Drive Cycle – Pattern 11 P.13A-12.

(2) Check the diagnostic trouble code (DTC).

Q: Is DTC P0137 set?

YES : Retry the troubleshooting.

NO : The inspection is complete.

DTC P0138: Heated Oxygen Sensor Circuit High Voltage <SENSOR 2>

Heated Oxygen Sensor (rear) Circuit

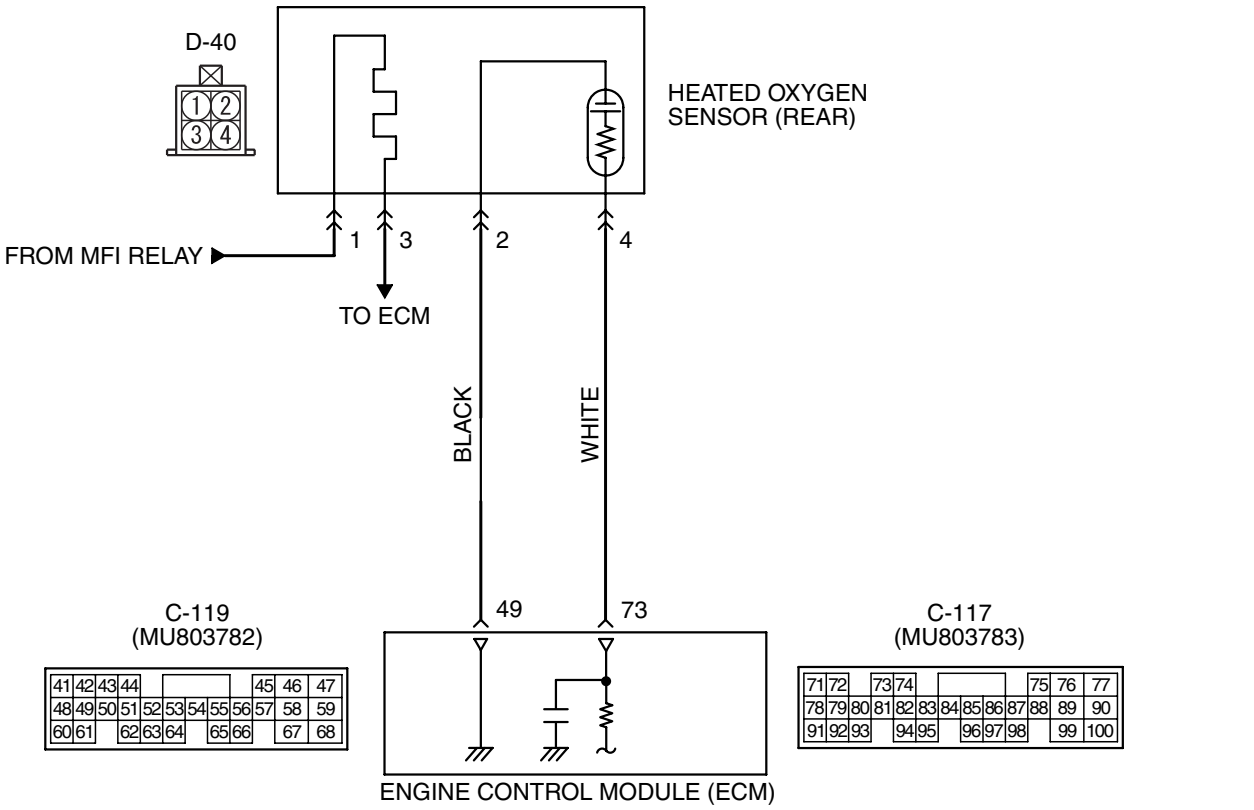

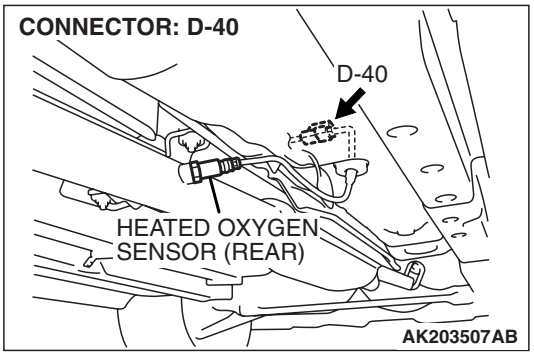

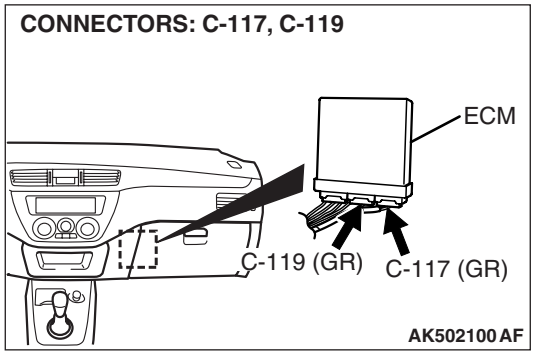

TSB Revision

CIRCUIT OPERATION

- A voltage corresponding to the oxygen concentration in the exhaust gas is sent to the ECM (terminal No. 73) from the output terminal (terminal No. 4) of the heated oxygen sensor (rear).
- Terminal No. 2 of the heated oxygen sensor (rear) is grounded with ECM (terminal No. 49).

TECHNICAL DESCRIPTION

- The output signal of the heated oxygen sensor (front) is compensated by the output signal of the heated oxygen sensor (rear).
- The ECM checks for an open circuit in the heated oxygen sensor (rear) output line.

DESCRIPTIONS OF MONITOR METHODS

- Heated oxygen sensor (rear) output voltage is over specified range.

MONITOR EXECUTION

- Continuous

MONITOR EXECUTION CONDITIONS (Other monitor and Sensor)

Other Monitor (There is no temporary DTC stored in memory for the item monitored below)

- Heated oxygen sensor heater (front) monitor
- Heated oxygen sensor heater (rear) monitor
- Air/fuel ratio feedback monitor

Sensor (The sensor below is determined to be normal)

- Volume airflow sensor
- Engine coolant temperature sensor
- Intake air temperature sensor
- Barometric pressure sensor

DTC SET CONDITIONS

Logic Flow Chart

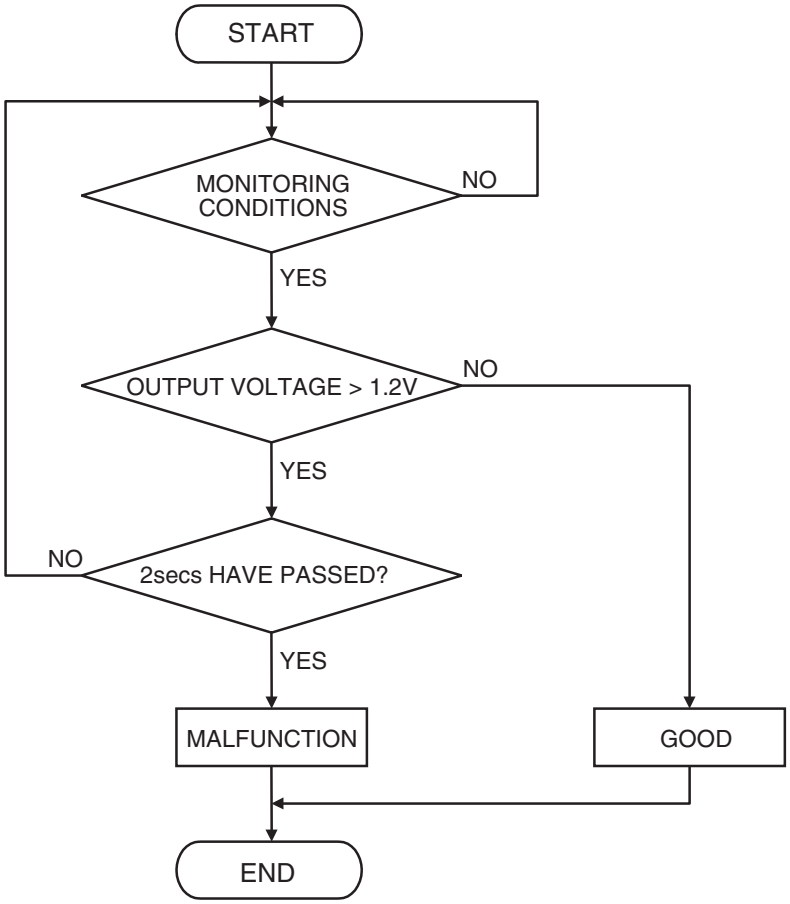

AK301441

Check Condition

- 2 seconds or more have passed since the engine starting sequence was completed.

Judgment Criterion

- Heated oxygen sensor (rear) output voltage has continued to be 1.2 volts or higher for 2 seconds.

OBD-II DRIVE CYCLE PATTERN

Refer to Diagnostic Function –OBD-II Drive Cycle – Pattern 23 P.13A-12.

TROUBLESHOOTING HINTS (The most likely causes for this code to be set are:)

- Heated oxygen sensor (rear) failed.
- Short circuit in heated oxygen sensor (rear) output line.
- Connector damage.
- ECM failed.

DIAGNOSIS

Required Special Tools:

- MB991958: Scan Tool (M.U.T.-III Sub Assembly)
  - MB991824: V.C.I.
  - MB991827: USB Cable
  - MB991911: Main Harness B

TSB Revision

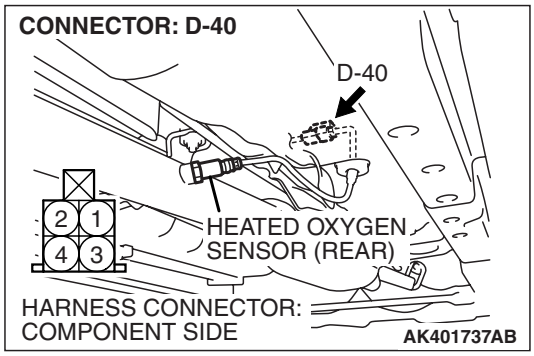

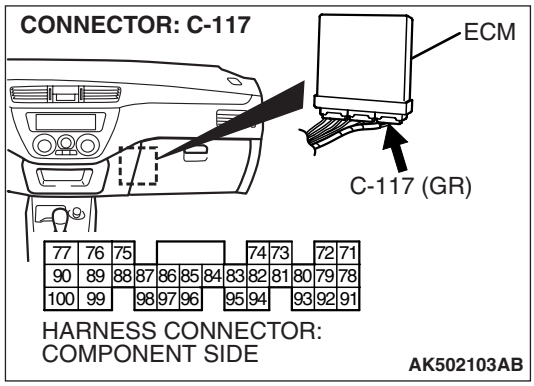

STEP 1. Check harness connector D-40 at heated oxygen sensor (rear) and harness connector C-117 at ECM for damage.

Q: Is the harness connector in good condition?

YES : Go to Step 2.

NO : Repair or replace it. Refer to GROUP 00E, Harness Connector Inspection P.00E-2. Then go to Step 3.

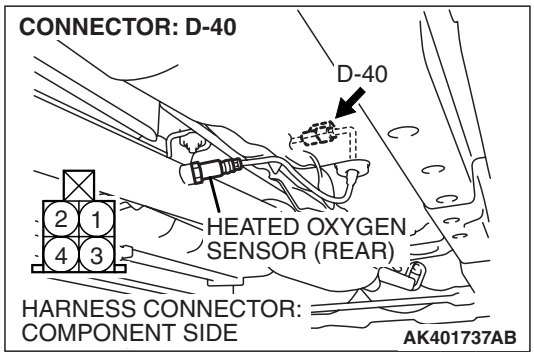

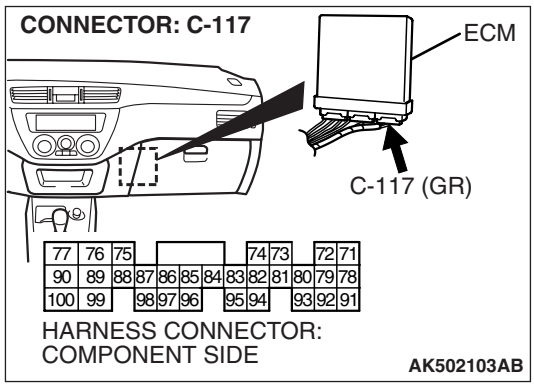

STEP 2. Check for short circuit to power supply between heated oxygen sensor (rear) connector D-40 (terminal No. 4) and ECM connector C-117 (terminal No. 73).

Q: Is the harness wire in good condition?

YES : Replace the ECM. Then go to Step 3.

NO : Repair it. Then go to Step 3.

STEP 3. Test the OBD-II drive cycle.

(1) Carry out a test drive with the drive cycle pattern. Refer to GROUP 13A, Diagnostic Function –OBD-II Drive Cycle – Pattern 23 P.13A-12.

(2) Check the diagnostic trouble code (DTC).

Q: Is DTC P0138 set?

YES : Retry the troubleshooting.

NO : The inspection is complete.

DTC P0139: Heated Oxygen Sensor Circuit Slow Response <SENSOR 2>

Heated Oxygen Sensor (rear) Circuit

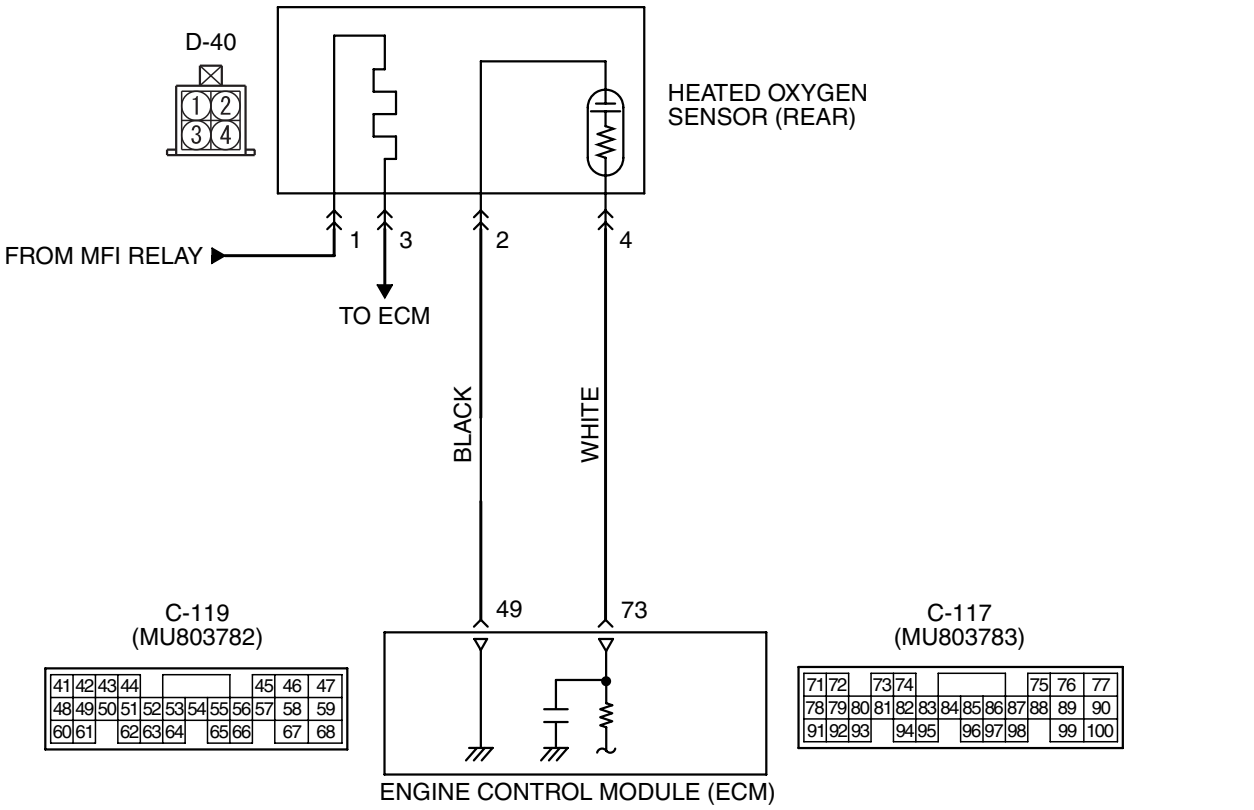

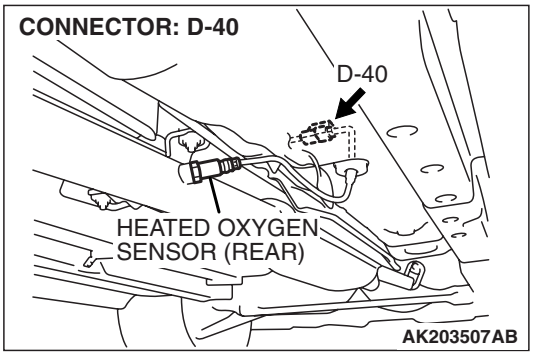

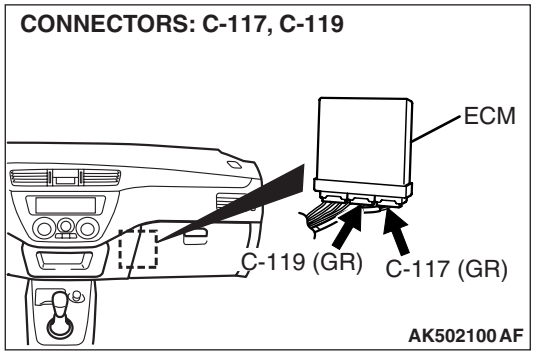

TSB Revision

CIRCUIT OPERATION

- A voltage corresponding to the oxygen concentration in the exhaust gas is sent to the ECM (terminal No. 73) from the output terminal (terminal No. 4) of the heated oxygen sensor (rear).
- Terminal No. 2 of the heated oxygen sensor (rear) is grounded with ECM (terminal No. 49).

TECHNICAL DESCRIPTION

- The output signal of the heated oxygen sensor (front) is compensated by the output signal of the heated oxygen sensor (rear).
- The ECM checks for an open circuit in the heated oxygen sensor (rear) output line.

DESCRIPTIONS OF MONITOR METHODS

- Heated oxygen sensor (rear) output voltage does not change during specified go/stop operations including fuel cut are repeated.

MONITOR EXECUTION

- Continuous

MONITOR EXECUTION CONDITIONS (Other monitor and Sensor)

Other Monitor (There is no temporary DTC stored in memory for the item monitored below)

- Heated oxygen sensor heater (front) monitor
- Heated oxygen sensor heater (rear) monitor
- Air/fuel ratio feedback monitor

Sensor (The sensor below is determined to be normal)

- Volume airflow sensor
- Engine coolant temperature sensor
- Intake air temperature sensor
- Barometric pressure sensor

DTC SET CONDITIONS

Logic Flow Chart

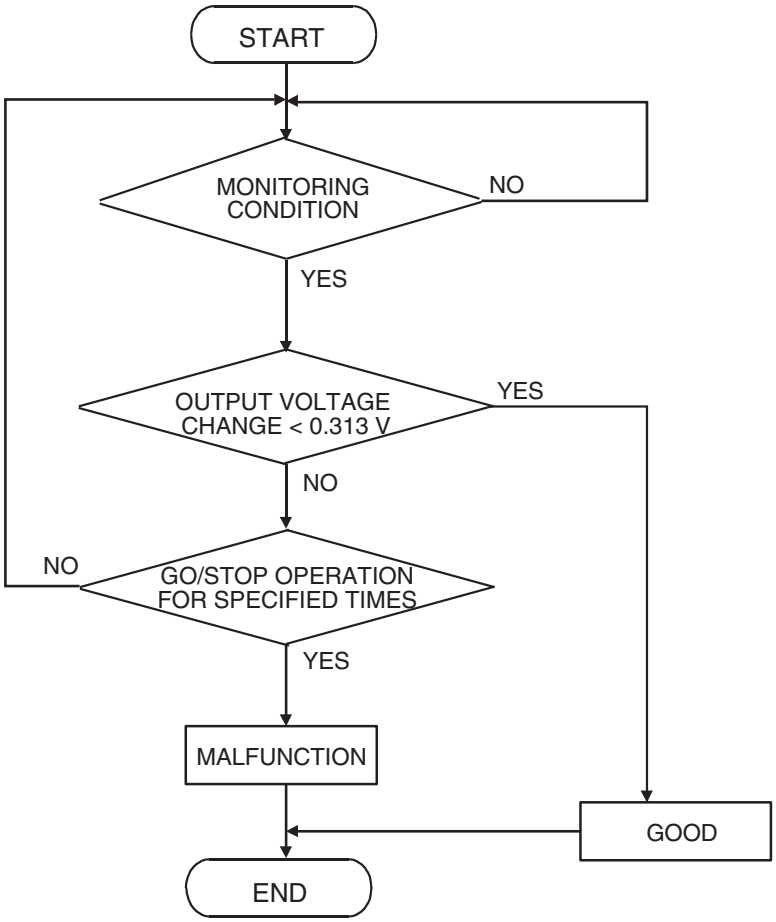

AK305597

Check Conditions

- Engine coolant temperature is higher than 76° C (169° F).
- The heated oxygen sensor (front) is active.
- The cumulative volume airflow sensor output frequency is higher than 10,000 Hz.
- Fuel is being shut off.

Judgement Criterion

- Heated oxygen sensor (rear) outpugt voltage does not reach 0.2 volt for 6 seconds from fuel cut start.

NOTE: Monitoring stops after fuel has been shut off for more than 38 seconds.

OBD-II DRIVE CYCLE PATTERN

Refer to Diagnostic Function –OBD-II Drive Cycle – Pattern 19 P.13A-12.

TROUBLESHOOTING HINTS (The most likely causes for this code to be set are:)

- Heated oxygen sensor (rear) failed.

DIAGNOSIS

Required Special Tools:

- MB991958: Scan Tool (M.U.T.-III Sub Assembly)
  - MB991824: V.C.I.
  - MB991827: USB Cable
  - MB991911: Main Harness B

TSB Revision

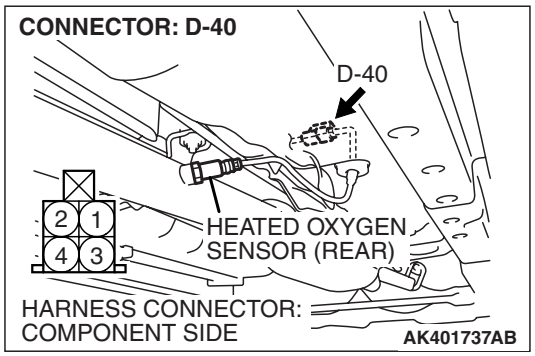

STEP 1. Replace heated oxygen sensor (rear).

(1) Replace heated oxygen sensor (rear).
(2) Carry out a test drive with the drive cycle pattern. Refer to Diagnostic Function –OBD-II Drive Cycle –Pattern 19 P.13A-12.
(3) Check the diagnostic trouble code (DTC).

Q: Is DTC P0139 set?

YES : Refer to DTC P0136 –Heated Oxygen Sensor Circuit (sensor 2) P.13A-258, DTC P0137 –Heated Oxygen Sensor Circuit Low Voltage (sensor 2) P.13A-269, DTC P0138 –Heated Oxygen Sensor Circuit High Voltage (sensor 2) P.13A-275.

NO : The inspection is complete.

DTC P0140: Heated Oxygen Sensor Circuit No Activity Detected <SENSOR 2>

Heated Oxygen Sensor (rear) Circuit

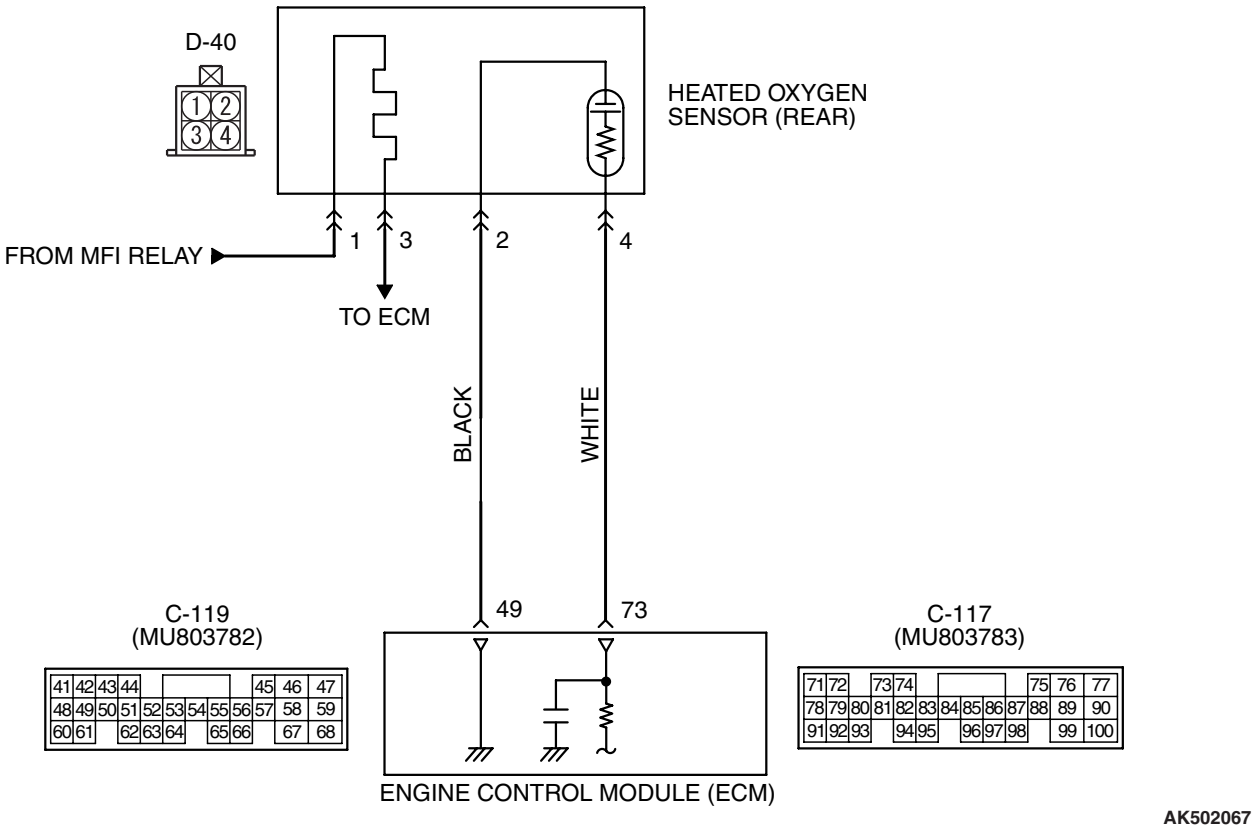

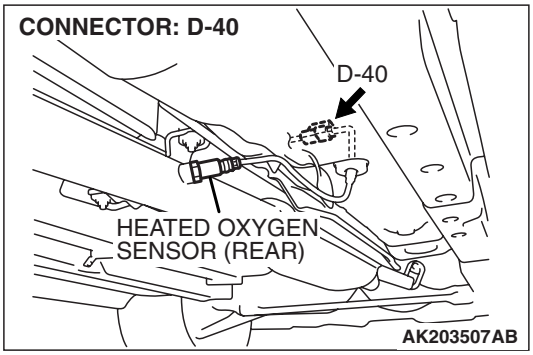

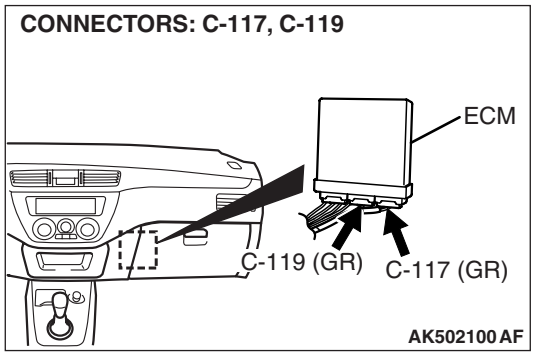

CIRCUIT OPERATION

- A voltage corresponding to the oxygen concentration in the exhaust gas is sent to the ECM (terminal No. 73) from the output terminal (terminal No. 4) of the heated oxygen sensor (rear).
- Terminal No. 2 of the heated oxygen sensor (rear) is grounded with ECM (terminal No. 49).

TECHNICAL DESCRIPTION

- The output signal of the heated oxygen sensor (front) is compensated by the output signal of the heated oxygen sensor (rear).
- The ECM checks for an open circuit in the heated oxygen sensor (rear) output line.

DESCRIPTIONS OF MONITOR METHODS

- Heated oxygen sensor (rear) output voltage does not change during specified go/stop operations including fuel cut are repeated.

MONITOR EXECUTION

- Continuous

MONITOR EXECUTION CONDITIONS (Other monitor and Sensor)

Other Monitor (There is no temporary DTC stored in memory for the item monitored below)

- Heated oxygen sensor heater (front) monitor
- Heated oxygen sensor heater (rear) monitor
- Air/fuel ratio feedback monitor

Sensor (The sensor below is determined to be normal)

- Volume airflow sensor
- Engine coolant temperature sensor
- Intake air temperature sensor
- Barometric pressure sensor

DTC SET CONDITIONS

Logic Flow Chart

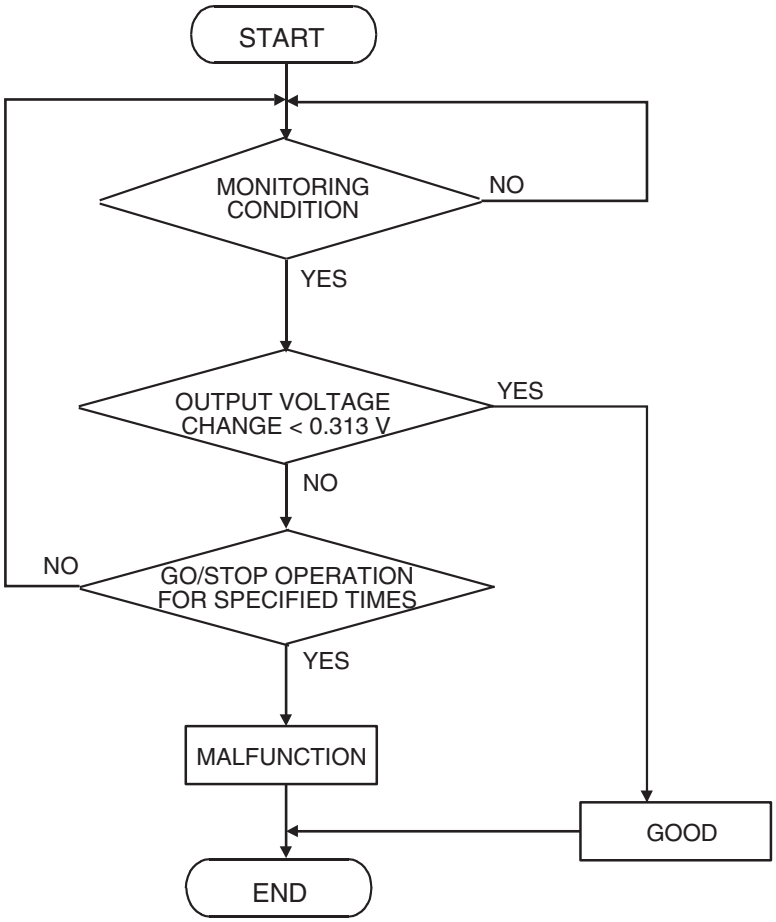

AK305597

Check Conditions

- Engine coolant temperature is higher than 76° C (169° F).
- The heated oxygen sensor (front) is active.
- The cumulative volume airflow sensor output frequency is higher than 10,000 Hz.
- Repeat 3 or more times: drive*1, stop*2.

  Drive*1:
  - Engine speed is higher than 1,500 r/min.
  - Volumetric efficiency is higher than 40 percent.
  - Vehicle speed is higher than 30 km/h (19 mph).
  - A total of more than 10 seconds have elapsed with the above mentioned conditions, and more than 2 seconds have elapsed with the fuel shut off.

  Stop*2:
  - Vehicle speed is lower than 1.5 km/h (1 mph).

Judgement Criterion

- Change in the output voltage of the heated oxygen sensor (rear) is lower than 0.313 volt.

  NOTE: Monitoring stops after fuel has been shut off for more than 38 seconds.

OBD-II DRIVE CYCLE PATTERN

Refer to Diagnostic Function –OBD-II Drive Cycle – Pattern 12 P.13A-12.

TROUBLESHOOTING HINTS (The most likely causes for this code to be set are:)

- Heated oxygen sensor (rear) failed.
- Connector damage.
- ECM failed.

DIAGNOSIS

Required Special Tools:

- MB991958: Scan Tool (M.U.T.-III Sub Assembly)
  - MB991824: V.C.I.
  - MB991827: USB Cable
  - MB991911: Main Harness B

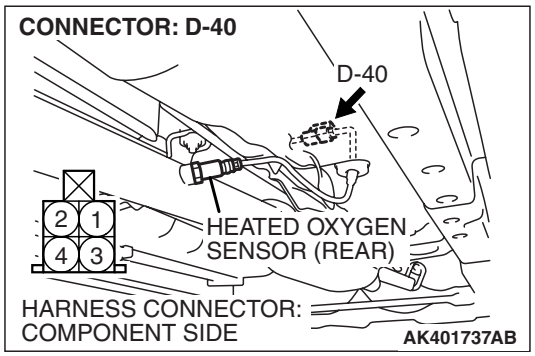

STEP 1. Replace heated oxygen sensor (rear).

(1) Replace heated oxygen sensor (rear).
(2) Carry out a test drive with the drive cycle pattern. Refer to Diagnostic Function –OBD-II Drive Cycle –Pattern 12 P.13A-12.
(3) Check the diagnostic trouble code (DTC).

Q: Is DTC P0140 set?

YES : Refer to DTC P0136 –Heated Oxygen Sensor Circuit (sensor 2) P.13A-258, DTC P0137 –Heated Oxygen Sensor Circuit Low Voltage (sensor 2) P.13A-269, DTC P0138 –Heated Oxygen Sensor Circuit High Voltage P.13A-275.

NO : The inspection is complete.

DTC P0171: System too Lean

System too Lean Circuit

- Refer to, DTC P0201 –P0204 Injector Circuit Malfunction. P.13A-323

CIRCUIT OPERATION

- Refer to, DTC P0201 –P0204 Injector Circuit Malfunction. P.13A-323

TECHNICAL DESCRIPTION

- If a malfunction occurs in the fuel system, the fuel trim value becomes too large.
- The ECM checks whether the fuel trim value is within a specified range.

DESCRIPTIONS OF MONITOR METHODS

- Air/fuel learning value (long term fuel trim) and air/fuel feedback integral value (short term fuel trim) are too lean.

MONITOR EXECUTION

- Continuous

MONITOR EXECUTION CONDITIONS (Other monitor and Sensor)

Other Monitor (There is no temporary DTC stored in memory for the item monitored below)

- Misfire monitor

Sensor (The sensor below is determined to be normal)

- Volume airflow sensor
- Engine coolant temperature sensor
- Intake air temperature sensor
- Barometric pressure sensor
- Throttle position sensor

DTC SET CONDITIONS

Logic Flow Chart

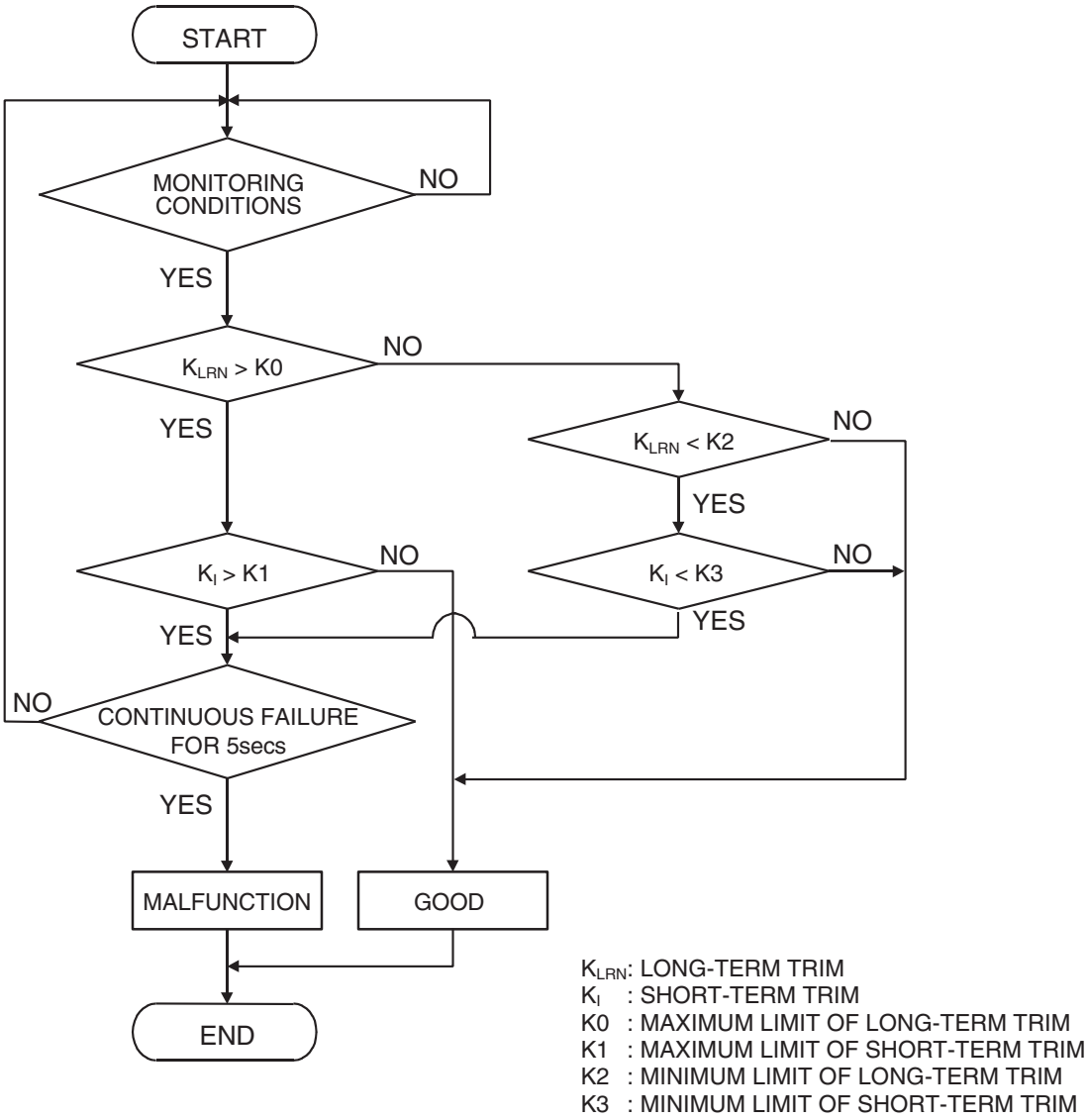

Check Conditions

- Engine coolant temperature is lower than approximately 100° C (212° F) when the engine is started.
- Intake air temperature is lower than 60° C (140° F) when the engine is started.
- Under the closed loop air/fuel ratio control.
- Engine coolant temperature is higher than 76° C (169° F).
- Volume airflow sensor output frequency is 56 Hz or more.

Judgment Criteria

- Long-term fuel trim has continued to be higher than + 12.5 percent for 5 seconds.

or

- Short-term fuel trim has continued to be higher than + 10.0 percent for 5 seconds.

Check Conditions
- Engine coolant temperature is lower than approximately 100° C (212° F) when the engine is started.
- Intake air temperature is lower than 60° C (140° F) when the engine is started.
- Under the closed loop air/fuel ratio control.
- Engine coolant temperature is higher than 76° C (169° F).
- Volume airflow sensor output frequency is 56 Hz or less.

Judgment Criteria
- Long-term fuel trim has continued to be higher than +12.5 percent for 5 seconds.

or
- Short-term fuel trim has continued to be higher than +15 percent for 5 seconds.

Check Conditions
- Engine coolant temperature is higher than approximately 100° C (212° F) when the engine is started.
- Intake air temperature is higher than 60° C (140° F) when the engine is started.
- Under the closed loop air/fuel ratio control.
- Engine coolant temperature is higher than 76° C (169° F).
- Volume airflow sensor output frequency is 56 Hz or more.

Judgment Criteria
- Long-term fuel trim has continued to be higher than +12.5 percent for 5 seconds.

or
- Short-term fuel trim has continued to be higher than +20.0 percent for 5 seconds.

Check Conditions
- Engine coolant temperature is higher than approximately 100° C (212° F) when the engine is started.
- Intake air temperature is higher than 60° C (140° F) when the engine is started.
- Under the closed loop air/fuel ratio control.
- Engine coolant temperature is higher than 76° C (169° F).
- Volume airflow sensor output frequency is 56 Hz or less.

Judgment Criteria
- Long-term fuel trim has continued to be higher than + 12.5 percent for 5 seconds.

or
- Short-term fuel trim has continued to be higher than + 25.0 percent for 5 seconds.

Check Conditions
- Engine coolant temperature is higher than 76° C (169° F).
- Under the closed loop air/fuel ratio control.

Judgment Criteria
- Long-term fuel trim has continued to be + 12.5 percent for 2 seconds.

or
- Short-term fuel trim has continued to be + 25.0 percent for 2 seconds.

OBD-II DRIVE CYCLE PATTERN

Refer to Diagnostic Function –OBD-II Drive Cycle – Pattern 20 P.13A-12.

TROUBLESHOOTING HINTS (The most likely causes for this code to be set are:)

- Volume airflow sensor failed.
- Injector failed.
- Incorrect fuel pressure.
- Air drawn in from gaps in gasket, seals, etc.
- Heated oxygen sensor failed.
- Engine coolant temperature sensor failed.
- Intake air temperature sensor failed.
- Barometric pressure sensor failed.
- Use of incorrect or contaminated fuel.
- ECM failed.

DIAGNOSIS

Required Special Tools:
- MB991958: Scan Tool (M.U.T.-III Sub Assembly)
  - MB991824: V.C.I.
  - MB991827: USB Cable
  - MB991911: Main Harness B

STEP 1. Check for exhaust leaks.

Q: Are there any abnormalities?

YES : Go to Step 2.
NO : Repair it. Then go to Step 14.

STEP 2. Check for intake system vacuum leaks.

Q: Are there any abnormalities?

YES : Go to Step 3.
NO : Repair it. Then go to Step 14.

STEP 3. Using scan tool MB991958, check data list item 12: Volume Airflow Sensor.

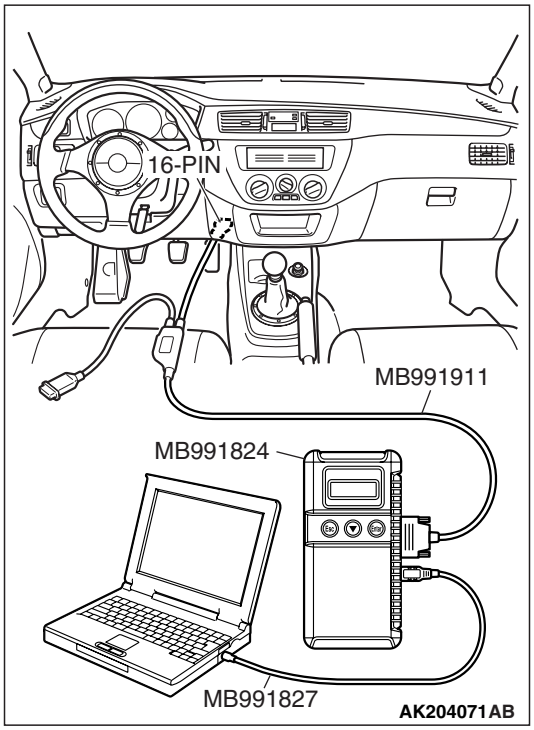

⚠ CAUTION

To prevent damage to scan tool MB991958, always turn the ignition switch to the "LOCK" (OFF) position before connecting or disconnecting scan tool MB991958.

(1) Connect scan tool MB991958 to the data link connector.
(2) Start the engine and run at idle.
(3) Set scan tool MB991958 to the data reading mode for item 12, Volume Airflow Sensor.
(4) Warm up the engine to normal operating temperature: 80° C to 95° C (176° F to 203° F).
- When idling, between 17 and 43 Hz (between 2 and 7 gm/s).
- When 2,500 r/min, between 40 and 100 Hz (between 5 and 16 gm/s).

(5) Turn the ignition switch to the "LOCK" (OFF) position.

Q: Is the sensor operating properly?

YES : Go to Step 4.
NO : Refer to, DTC P0101 –Volume Airflow Circuit Range/Performance Problem P.13A-90, DTC P0102 – Volume Airflow Circuit Low Input P.13A-98.

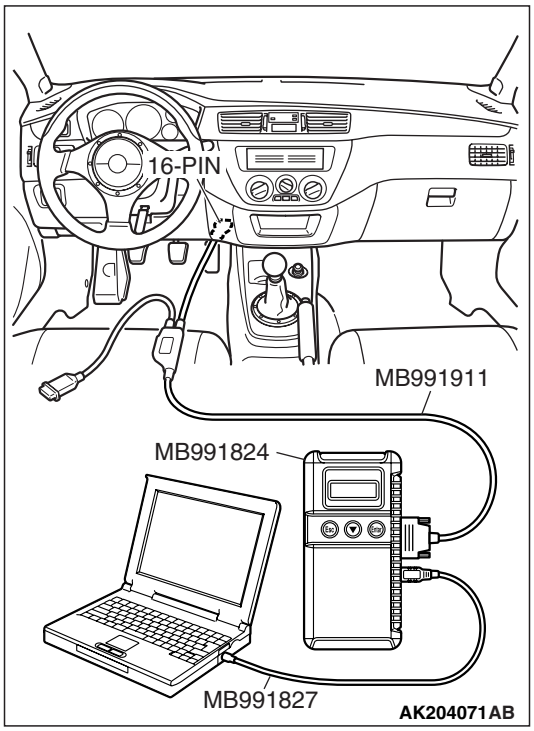

STEP 4. Using scan tool MB991958, check data list item 13: Intake Air Temperature Sensor.

(1) Turn the ignition switch to the "ON" position.
(2) Set scan tool MB991958 to the data reading mode for item 13, Intake Air Temperature Sensor.
- The intake air temperature and temperature shown with the scan tool should approximately match.

(3) Turn the ignition switch to the "LOCK" (OFF) position.

Q: Is the sensor operating properly?

YES : Go to Step 5.

NO : Refer to, DTC P0111 –Intake Air Temperature Circuit Range/Performance Problem P.13A-138, DTC P0112 –Intake Air Temperature Circuit Low Input P.13A-145, DTC P0113 –Intake Air Temperature Circuit High Input P.13A-150.

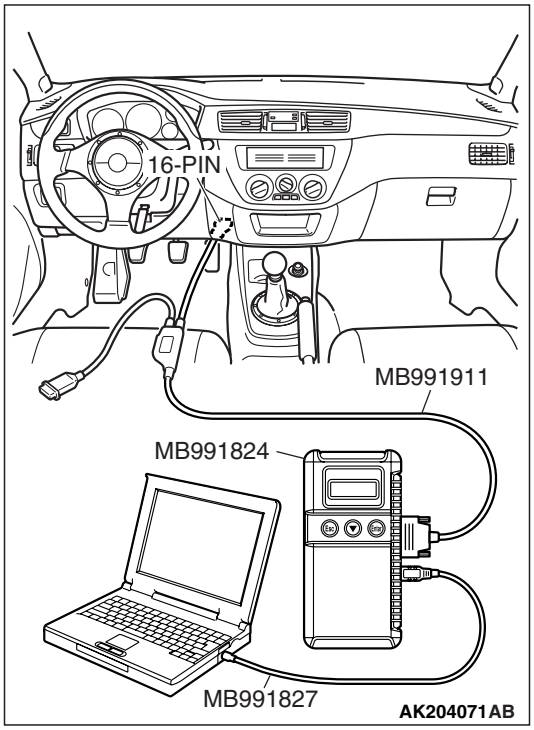

STEP 5. Using scan tool MB991958, check data list item 21: Engine Coolant Temperature Sensor.

(1) Turn the ignition switch to the "ON" position.
(2) Set scan tool MB991958 to the data reading mode for item 21, Engine Coolant Temperature Sensor.
- The engine coolant temperature and temperature shown with the scan tool should approximately match.

(3) Turn the ignition switch to the "LOCK" (OFF) position.

Q: Is the sensor operating properly?

YES : Go to Step 6.

NO : Refer to, DTC P0116 –Engine Coolant Temperature Circuit Range/Performance Problem P.13A-157, DTC P0117 –Engine Coolant Temperature Circuit Low Input P.13A-167, DTC P0118 –Engine Coolant Temperature Circuit High Input P.13A-172.

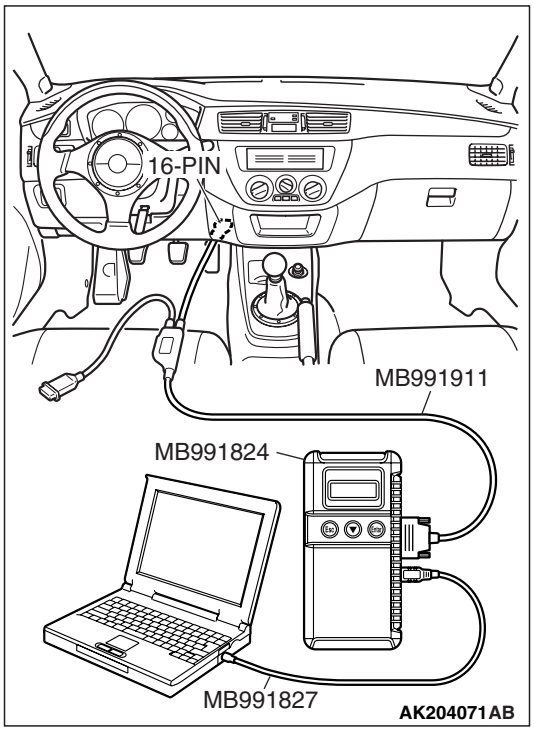

STEP 6. Using scan tool MB991958, check data list item 25: Barometric Pressure Sensor.

(1) Turn the ignition switch to the "ON" position.

(2) Set scan tool MB991958 to the data reading mode for item 25, Barometric Pressure Sensor.
- When altitude is 0 m (0 foot), 101 kPa (29.8 in.Hg).
- When altitude is 600 m (1,969 feet), 95 kPa (28.1 in.Hg).
- When altitude is 1,200 m (3,937 feet), 88 kPa (26.0 in.Hg).
- When altitude is 1,800 m (5,906 feet), 81 kPa (23.9 in.Hg).

(3) Turn the ignition switch to the "LOCK" (OFF) position.

Q: Is the sensor operating properly?

YES : Go to Step 7.

NO : Refer to, DTC P2228 –Barometric Pressure Circuit Low Input P.13A-667, DTC P2229 –Barometric Pressure Circuit High Input P.13A-679.

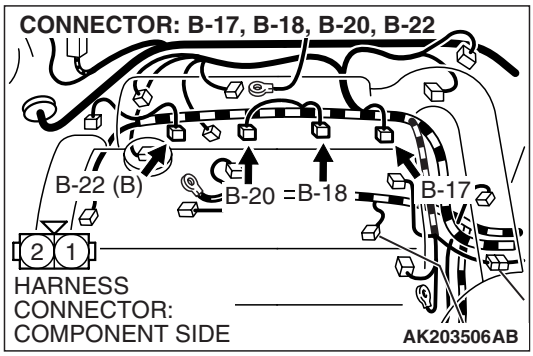

STEP 7. Check harness connectors B-17, B-18, B-20, B-22 at injector for damage.

Q: Is the harness connector in good condition?

YES : Go to Step 8.

NO : Repair or replace it. Refer to GROUP 00E, Harness Connector Inspection P.00E-2. Then go to Step 14.

STEP 8. Check the injector.

(1) Disconnect each injector connector.

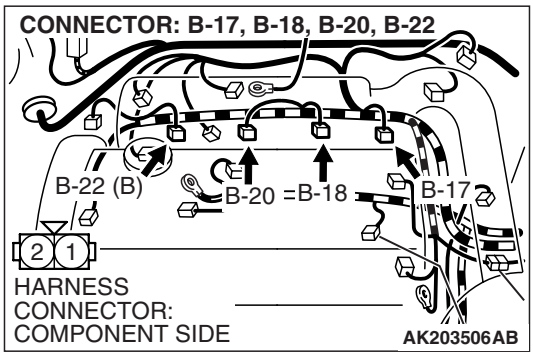

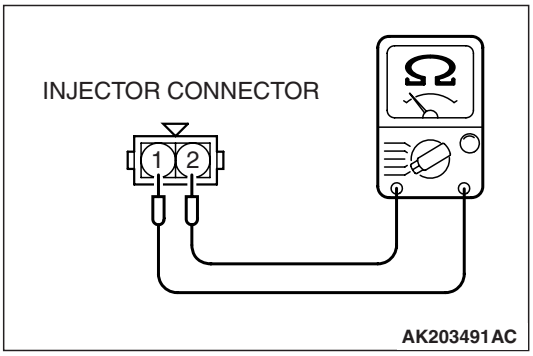

(2) Measure the resistance between injector side connector terminal No. 1 and No. 2.

Standard value: 2 – 3 ohms [at 20° C (68° F)]

Q: Is the measured resistance between 2 and 3 ohms [at 20° C (68° F)]?

YES : Go to Step 10.

NO : Replace the injector. Then go to Step 14.

STEP 9. Check harness connector C-121 at ECM for damage.

Q: Is the harness connector in good condition?

YES : Go to Step 10.

NO : Repair or replace it. Refer to GROUP 00E, Harness Connector Inspection P.00E-2. Then go to Step 14.

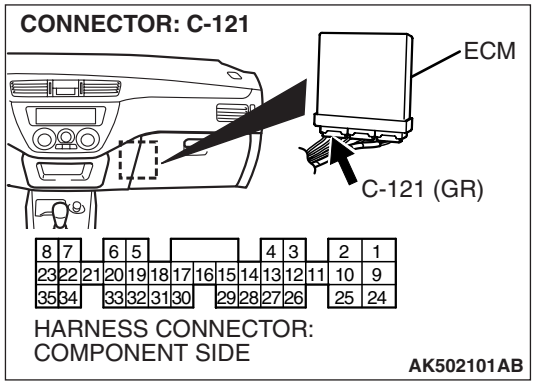

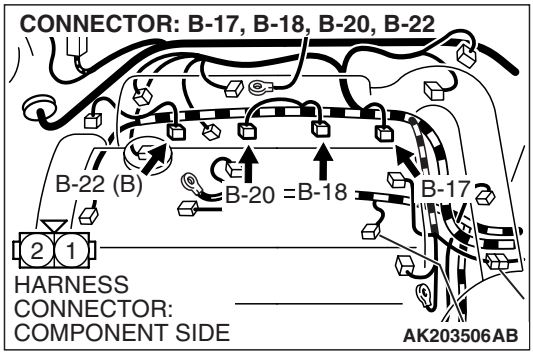

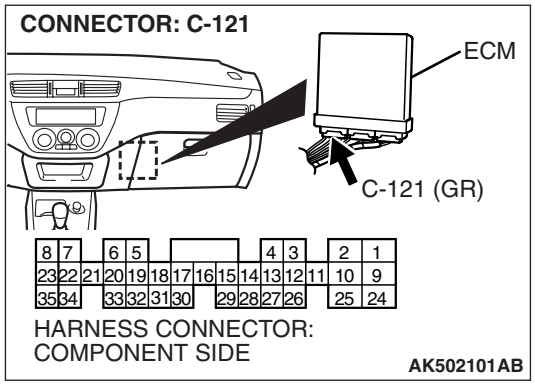

STEP 10. Check for harness damage between injector connector and ECM connector.

a. Check the harness wire between injector connector B-22 (terminal No. 2) and ECM connector C-121 (terminal No. 1) at No. 1 cylinder.
b. Check the harness wire between injector connector B-20 (terminal No. 2) and ECM connector C-121 (terminal No. 9) at No. 2 cylinder.
c. Check the harness wire between injector connector B-18 (terminal No. 2) and ECM connector C-121 (terminal No. 24) at No. 3 cylinder.
d. Check the harness wire between injector connector B-17 (terminal No. 2) and ECM connector C-121 (terminal No. 2) at No. 4 cylinder.

Q: Is the harness wire in good condition?

YES : Go to Step 11.
NO : Repair it. Then go to Step 14.

STEP 11. Check the fuel pressure.

Refer to GROUP 13A, On-vehicle Service –Fuel Pressure Test P.13A-865.

Q: Is the fuel pressure normal?

YES : Go to Step 12.
NO : Repair it. Then go to Step 14.

STEP 12. Check for entry of foreign matter (water, kerosene, etc.) into fuel.

Q: Are there any abnormalities?

YES : Replace the fuel. Then go to Step 14.
NO : Go to Step 13.

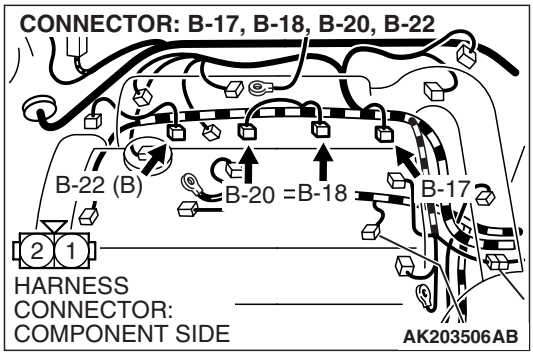

STEP 13. Replace the injector.

(1) Replace the injector.
(2) Carry out a test drive with the drive cycle pattern. Refer to GROUP 13A, Diagnostic Function –OBD-II Drive Cycle – Pattern 20 P.13A-12.
(3) Check the diagnostic trouble code (DTC).

Q: Is DTC P0171 set?

YES : Replace the ECM. Then go to Step 14.
NO : The inspection is complete.

STEP 14. Test the OBD-II drive cycle.

(1) Carry out a test drive with the drive cycle pattern. Refer to GROUP 13A, Diagnostic Function –OBD-II Drive Cycle – Pattern 20 P.13A-12.

(2) Check the diagnostic trouble code (DTC).

Q: Is DTC P0171 set?

YES : Retry the troubleshooting.
NO : The inspection is complete.

DTC P0172: System too Rich

System too Rich Circuit

- Refer to, DTC P0201 –P0204 Injector Circuit Malfunction P.13A-323.

CIRCUIT OPERATION

- Refer to, DTC P0201 –P0204 Injector Circuit Malfunction P.13A-323.

TECHNICAL DESCRIPTION

- If a malfunction occurs in the fuel system, the fuel trim value becomes too small.
- The ECM checks whether the fuel trim value is within a specified range.

DESCRIPTIONS OF MONITOR METHODS

- Air/fuel learning value (long term fuel trim) and air/fuel feedback integral value (short term fuel trim) are too rich.

MONITOR EXECUTION

- Continuous

MONITOR EXECUTION CONDITIONS (Other monitor and Sensor)

Other Monitor (There is no temporary DTC stored in memory for the item monitored below)

- Misfire monitor

Sensor (The sensor below is determined to be normal)

- Volume airflow sensor
- Engine coolant temperature sensor
- Intake air temperature sensor
- Barometric pressure sensor
- Throttle position sensor

DTC SET CONDITIONS

Logic Flow Chart

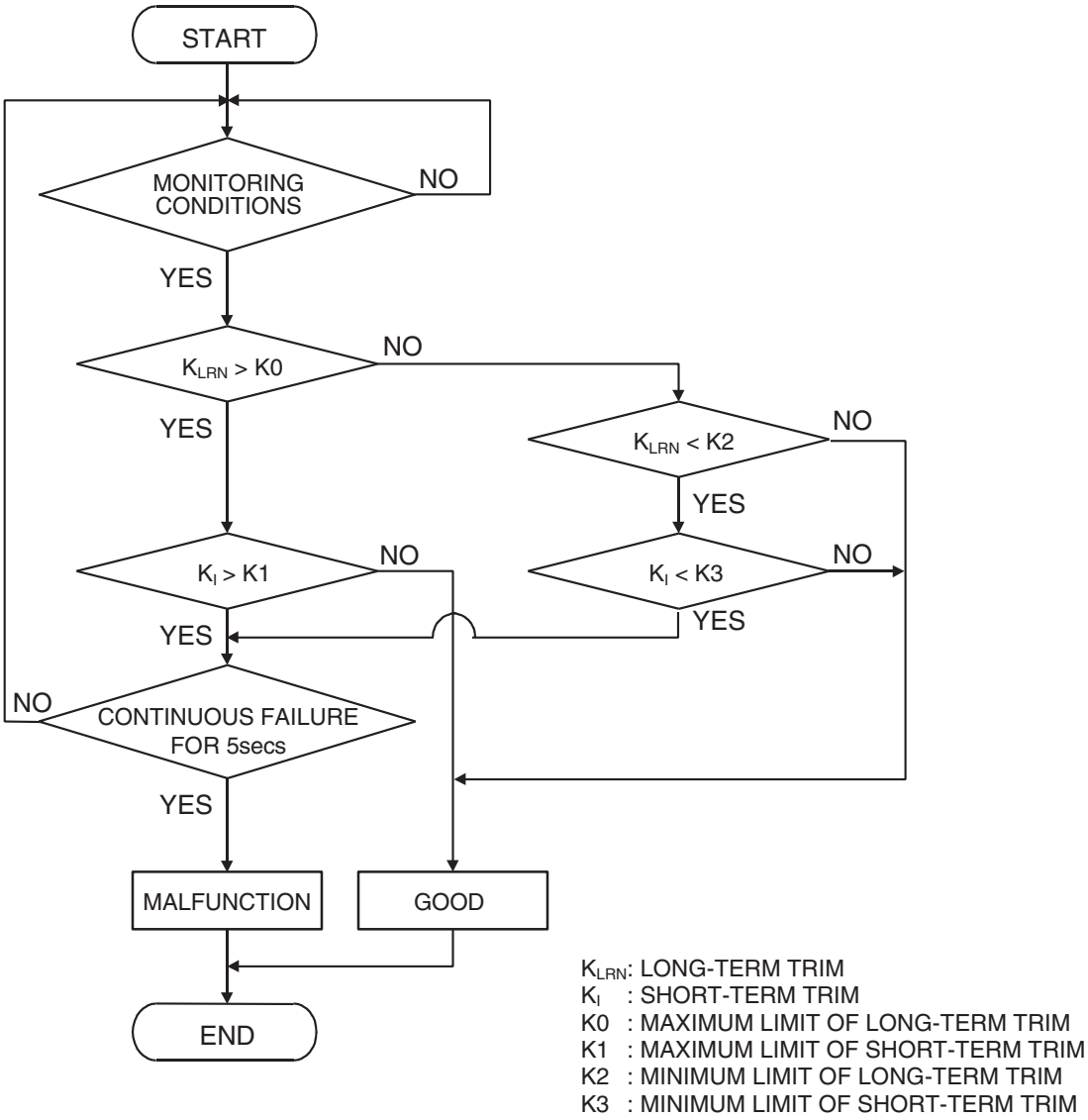

Check Conditions

- Under the closed loop air/fuel ratio control.
- Engine coolant temperature is higher than 76° C (169° F).
- Volume airflow sensor output frequency is 56 Hz or more.

Judgment Criteria

- Long-term fuel trim has continued to be lower than –12.5 percent for 5 seconds.

or

- Short-term fuel trim has continued to be lower than –10.0 percent for 5 seconds.

Check Conditions

- Under the closed loop air/fuel ratio control.
- Engine coolant temperature is higher than 76° C (169° F).
- Volume airflow sensor output frequency is 56 Hz or less.

Judgment Criteria

- Long-term fuel trim has continued to be lower than –12.5 percent for 5 seconds.

or

- Short-term fuel trim has continued to be lower than –15.0 percent for 5 seconds.

TSB Revision

Check Conditions

- Engine coolant temperature is higher than 76° C (169° F).
- Under the closed loop air/fuel ratio control.

Judgment Criteria

- Long-term fuel trim has continued to be –12.5 percent for 2 seconds.

or

- Short-term fuel trim has continued to be – 25.0 percent for 2 seconds.

OBD-II DRIVE CYCLE PATTERN

Refer to Diagnostic Function –OBD-II Drive Cycle – Pattern 20 P.13A-12.

TROUBLESHOOTING HINTS (The most likely causes for this code to be set are:)

- Volume airflow sensor failed.
- Injector failed.
- Incorrect fuel pressure.
- Engine coolant temperature sensor failed.
- Intake air temperature sensor failed.
- Barometric pressure sensor failed.
- Harness damage in injector circuit, or connector damage.
- ECM failed.

DIAGNOSIS

Required Special Tools:

- MB991958: Scan Tool (M.U.T.-III Sub Assembly)
  - MB991824: V.C.I.
  - MB991827: USB Cable
  - MB991911: Main Harness B

STEP 1. Using scan tool MB991958, check data list item 12: Volume Airflow Sensor.

⚠ CAUTION

To prevent damage to scan tool MB991958, always turn the ignition switch to the "LOCK" (OFF) position before connecting or disconnecting scan tool MB991958.

(1) Connect scan tool MB991958 to the data link connector.
(2) Start the engine and run at idle.
(3) Set scan tool MB991958 to the data reading mode for item 12, Volume Airflow Sensor.
(4) Warm up the engine to normal operating temperature: 80° C to 96° C (176° F to 205° F).
  - When idling, between 17 and 43 Hz (between 2 and 7 gm/s).
  - When 2,500 r/min, between 40 and 100 Hz (between 5 and 16 gm/s).
(5) Turn the ignition switch to the "LOCK" (OFF) position.

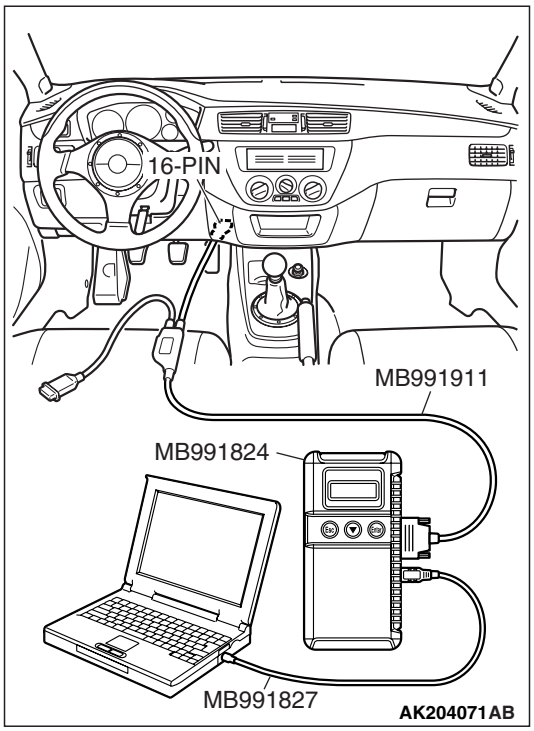

Q: Is the sensor operating properly?

YES : Go to Step 2.

NO : Refer to, DTC P0101 –Volume Airflow Circuit Range/Performance Problem P.13A-90, DTC P0102 – Volume Airflow Circuit Low Input P.13A-98.

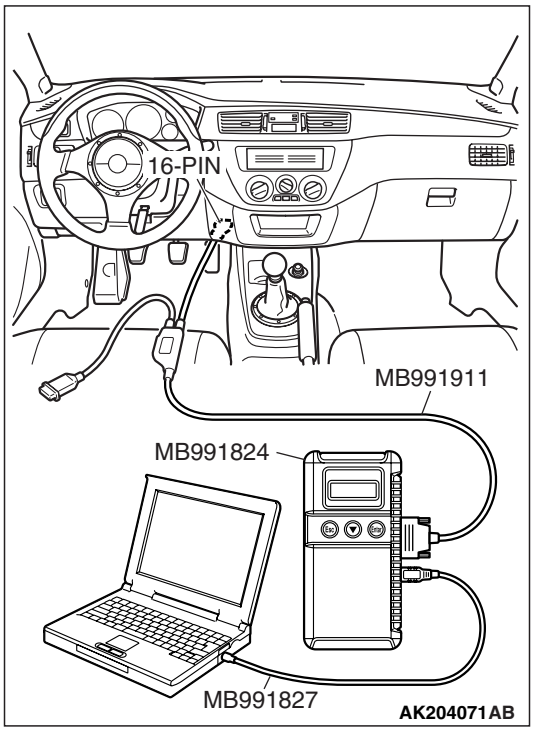

STEP 2. Using scan tool MB991958, check data list item 13: Intake Air Temperature Sensor.

(1) Turn the ignition switch to the "ON" position.
(2) Set scan tool MB991958 to the data reading mode for item 13, Intake Air Temperature Sensor.
- The intake air temperature and temperature shown with the scan tool should approximately match.

(3) Turn the ignition switch to the "LOCK" (OFF) position.

Q: Is the sensor operating properly?

YES : Go to Step 3.

NO : Refer to, DTC P0111 –Intake Air Temperature Circuit Range/Performance Problem P.13A-138, DTC P0112 –Intake Air Temperature Circuit Low Input P.13A-145, DTC P0113 –Intake Air Temperature Circuit High Input P.13A-150.

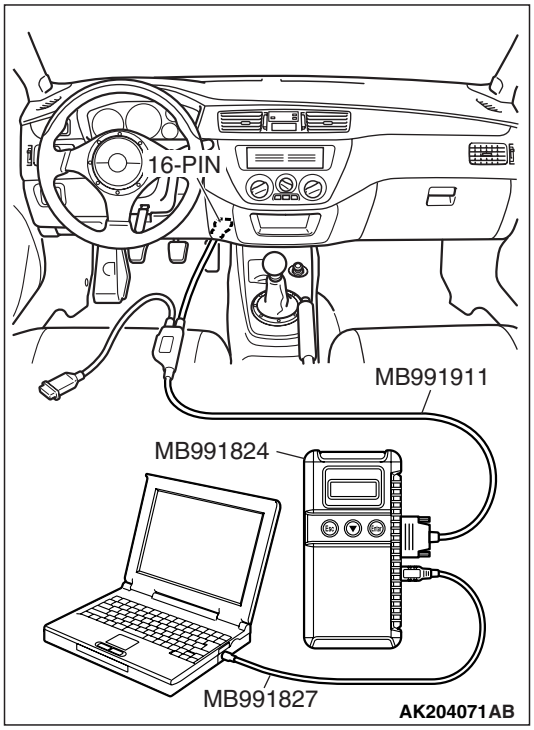

STEP 3. Using scan tool MB991958, check data list item 21: Engine Coolant Temperature Sensor.

(1) Turn the ignition switch to the "ON" position.
(2) Set scan tool MB991958 to the data reading mode for item 21, Engine Coolant Temperature Sensor.
- The engine coolant temperature and temperature shown with the scan tool should approximately match.

(3) Turn the ignition switch to the "LOCK" (OFF) position.

Q: Is the sensor operating properly?

YES : Go to Step 4.

NO : Refer to, DTC P0116 –Engine Coolant Temperature Circuit Range/Performance Problem P.13A-157, DTC P0117 –Engine Coolant Temperature Circuit Low Input P.13A-167, DTC P0118 –Engine Coolant Temperature Circuit High Input P.13A-172.

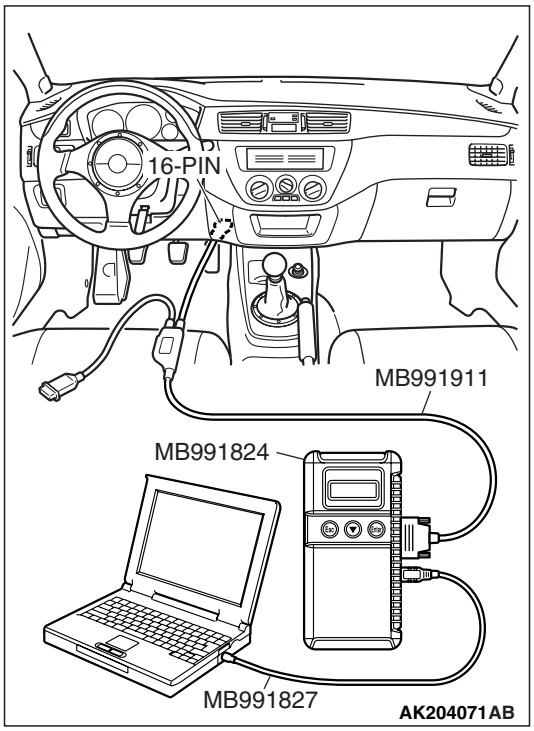

STEP 4. Using scan tool MB991958, check data list item 25: Barometric Pressure Sensor.

(1) Turn the ignition switch to the "ON" position.

(2) Set scan tool MB991958 to the data reading mode for item 25, Barometric Pressure Sensor.
- When altitude is 0 m (0 foot), 101 kPa (29.8 in.Hg).
- When altitude is 600 m (1,969 feet), 95 kPa (28.1 in.Hg).
- When altitude is 1,200 m (3,937 feet), 88 kPa (26.0 in.Hg).
- When altitude is 1,800 m (5,906 feet), 81 kPa (23.9 in.Hg).

(3) Turn the ignition switch to the "LOCK" (OFF) position.

Q: Is the sensor operating properly?

YES : Go to Step 5.

NO : Refer to, DTC P2228 –Barometric Pressure Circuit Low Input P.13A-667, DTC P2229 –Barometric Pressure Circuit High Input P.13A-679.

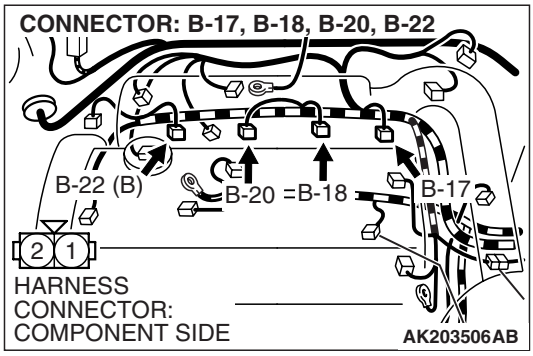

STEP 5. Check the injector.

(1) Disconnect each injector connector.

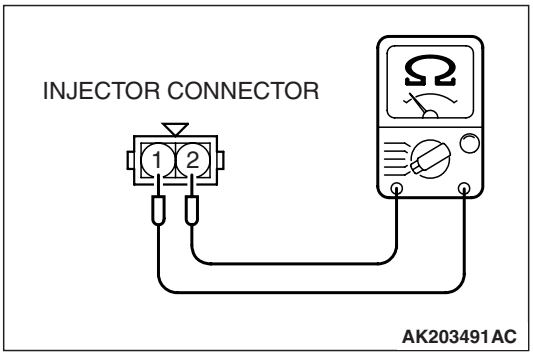

(2) Measure the resistance between injector side connector terminal No. 1 and No. 2.

Standard value: 2 – 3 ohms [at 20° C (68° F)]

Q: Is the measured resistance between 2 and 3 ohms [at 20° C (68° F)]?

YES : Go to Step 6.

NO : Replace the injector. Then go to Step 8.

STEP 6. Check the fuel pressure.

Refer to GROUP 13A, On-vehicle Service –Fuel Pressure Test P.13A-865.

Q: Is the fuel pressure normal?

YES : Go to Step 7.
NO : Repair or replace it. Then go to Step 8.

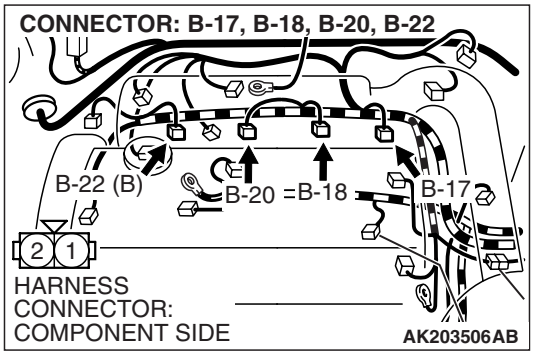

STEP 7. Replace the injector.

(1) Replace the injector.
(2) Carry out a test drive with the drive cycle pattern. Refer to GROUP 13A, Diagnostic Function –OBD-II Drive Cycle – Pattern 20 P.13A-12.
(3) Check the diagnostic trouble code (DTC).

Q: Is DTC P0172 set?

YES : Replace the ECM. Then go to Step 8.
NO : The inspection is complete.

STEP 8. Test the OBD-II drive cycle.

(1) Carry out a test drive with the drive cycle pattern. Refer to GROUP 13A, Diagnostic Function –OBD-II Drive Cycle – Pattern 20 P.13A-12.
(2) Check the diagnostic trouble code (DTC).

Q: Is DTC P0172 set?

YES : Retry the troubleshooting.
NO : The inspection is complete.

DTC P0181: Fuel Tank Temperature Sensor Circuit Range/Performance

Fuel Tank Temperature Sensor Circuit

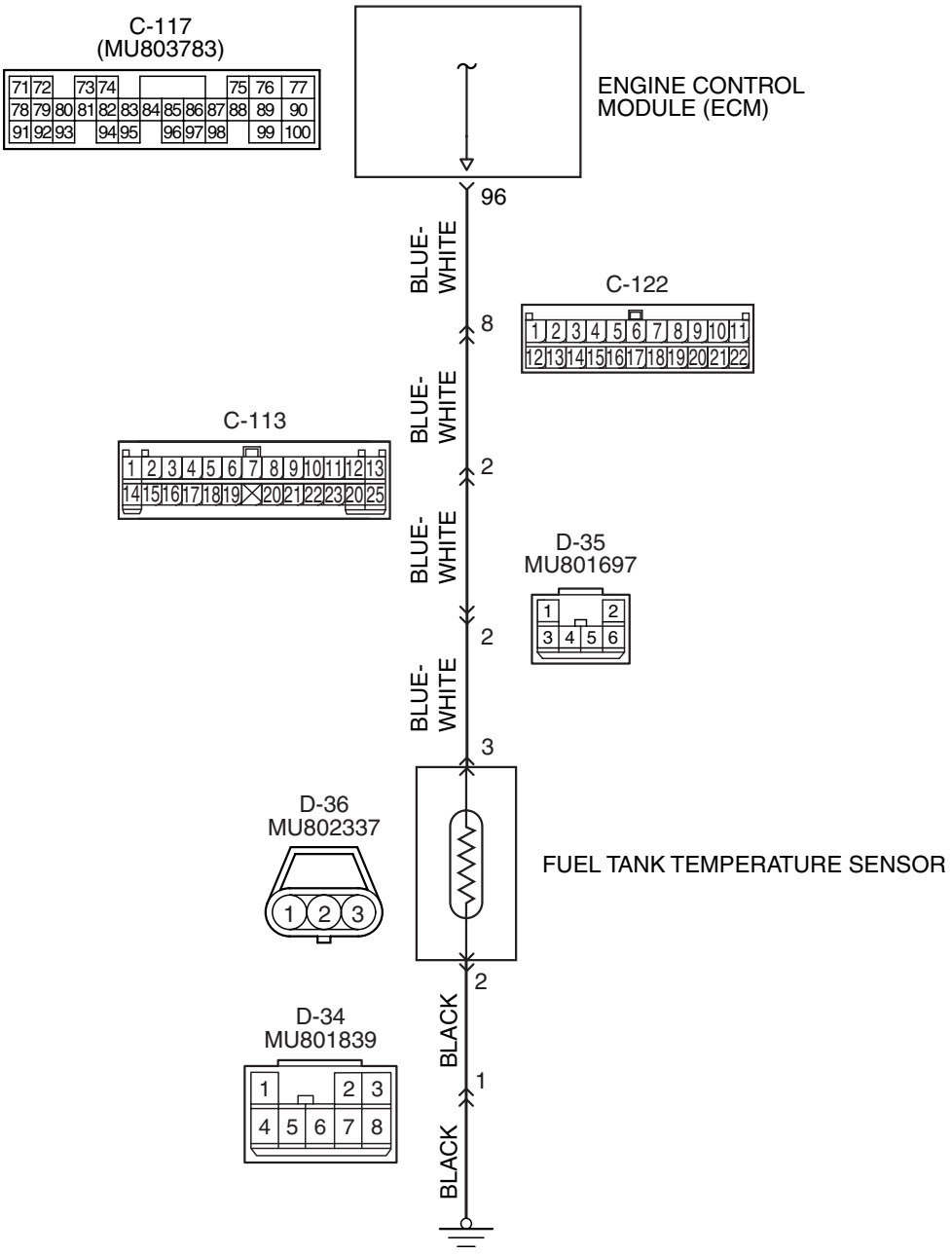

AK502068

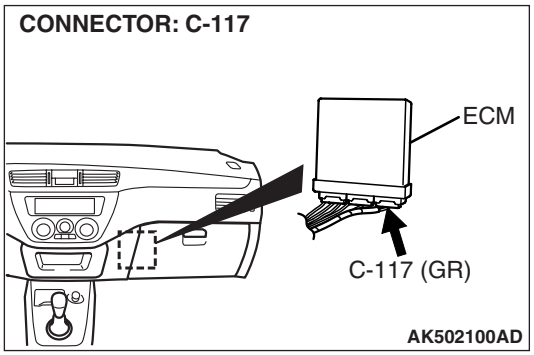

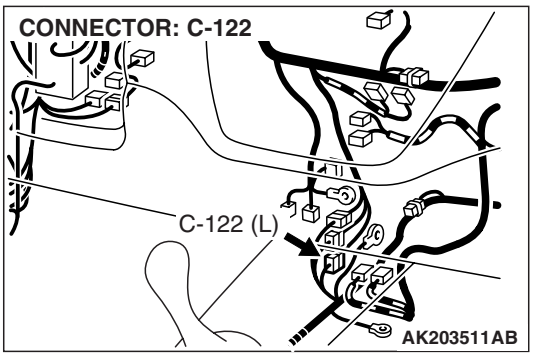

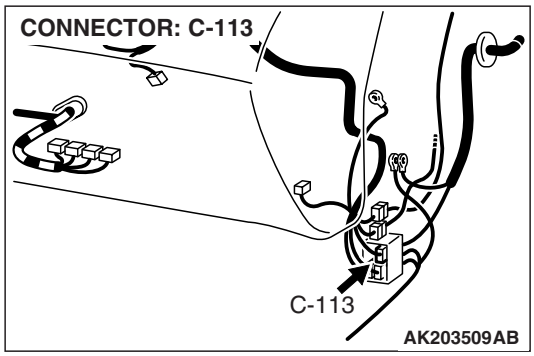

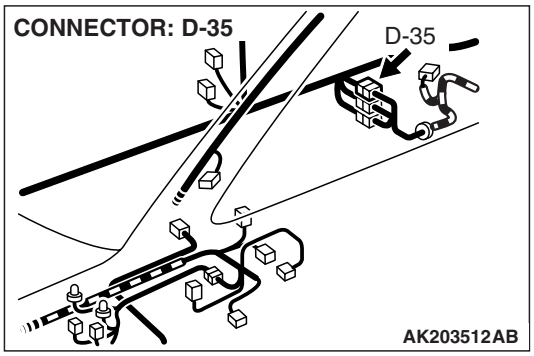

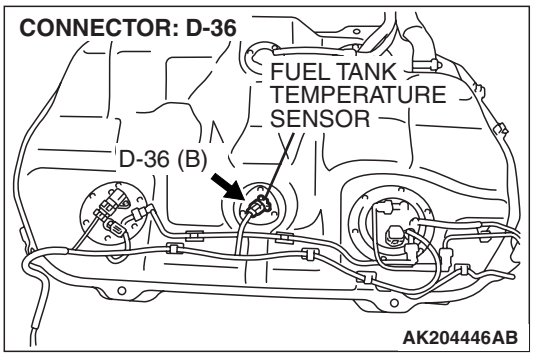

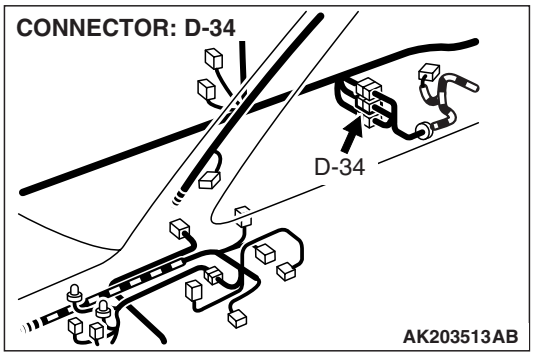

CIRCUIT OPERATION

- 5-volt voltage is applied to the fuel tank temperature sensor output terminal (terminal No. 3) from the ECM (terminal No. 96) via the resistor in the ECM.
- The fuel tank temperature sensor output voltage increases when the resistance increases and decreases when the resistance decreases. The ground terminal (terminal No. 2) is grounded to the vehicle body.

TECHNICAL DESCRIPTION

- The fuel tank temperature sensor converts the fuel tank temperature to a voltage.
- The ECM detects the fuel tank temperature in the fuel tank with this output voltage.

DESCRIPTIONS OF MONITOR METHODS

- Fuel tank temperature at engine start is higher than engine coolant temperature at engine start by specified value when engine is cold start condition.

MONITOR EXECUTION

- Continuous

MONITOR EXECUTION CONDITIONS (Other monitor and Sensor)

Other Monitor (There is no temporary DTC stored in memory for the item monitored below)

- Not applicable

Sensor (The sensor below is determined to be normal)

- Engine coolant temperature sensor
- Intake air temperature sensor

DTC SET CONDITIONS

Logic Flow Chart

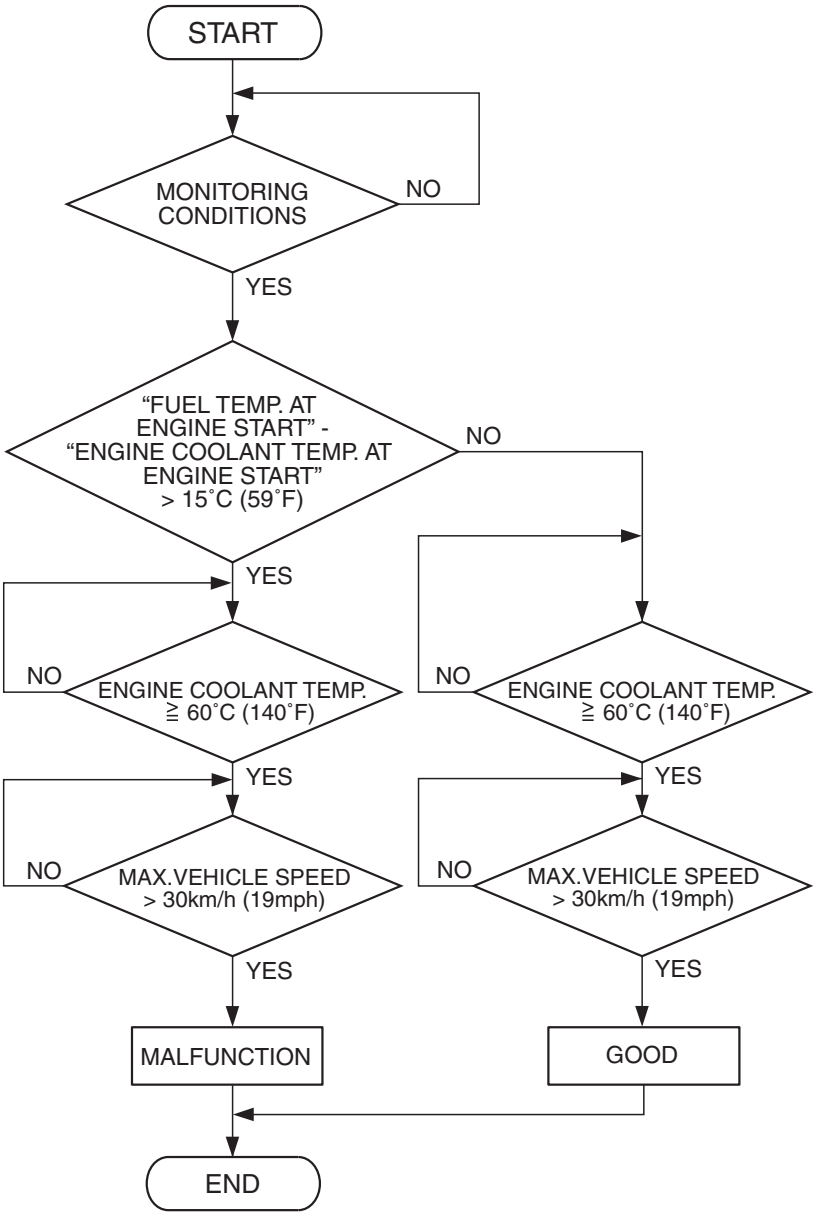

AK401744

Check Conditions

- The engine coolant temperature –intake air temperature is 5° C (41° F) or less when the engine is started.
- The engine coolant temperature is between –10° C (50° F) and 36° C (97° F) when the engine is started.
- Engine coolant temperature sensor is higher than 60° C (140° F).
- Maximum vehicle speed is higher than 30 km/h (19 mph) after the starting sequence has been completed.

Judgement Criterion

- The fuel tank temperature –engine coolant temperature is 15° C (59° F) or more when the engine is started.

TSB Revision

OBD-II DRIVE CYCLE PATTERN

Refer to Diagnostic Function –OBD-II Drive Cycle – Pattern 13 P.13A-12.

TROUBLESHOOTING HINTS (The most likely causes for this code to be set are:)

- Fuel tank temperature sensor failed.
- Open or shorted fuel tank temperature sensor circuit, harness damage, or connector damage.
- ECM failed.

NOTE: A diagnostic trouble code (DTC) could be output if the engine and the radiator have been flushed repeatedly when the engine coolant temperature was high (or the fuel tank temperature was high). Because this is not a failure, the DTC must be erased.
Make sure to test drive the vehicle in accordance with the drive cycle pattern in order to verify that a DTC will not be output.

DIAGNOSIS

Required Special Tools:

- MB991958: Scan Tool (M.U.T.-III Sub Assembly)
  - MB991824: V.C.I.
  - MB991827: USB Cable
  - MB991911: Main Harness B

STEP 1. Using scan tool MB991958, check data list item 4A: Fuel Tank Temperature Sensor.

⚠ CAUTION

To prevent damage to scan tool MB991958, always turn the ignition switch to the "LOCK" (OFF) position before connecting or disconnecting scan tool MB991958.

(1) Connect scan tool MB991958 to the data link connector.
(2) Turn the ignition switch to the "ON" position.
(3) Set scan tool MB991958 to the data reading mode for item 4A, Fuel Tank Temperature Sensor.
  - With the engine cool, the fuel tank temperature should be approximately the same as ambient air temperature.

(4) Turn the ignition switch to the "LOCK" (OFF) position.

Q: Is the sensor operating properly?

YES : It can be assumed that this malfunction is intermittent. Refer to GROUP 00, How to Use Troubleshooting/Inspection Service Points –How to Cope with Intermittent Malfunctions P.00-13.

NO : Go to Step 2.

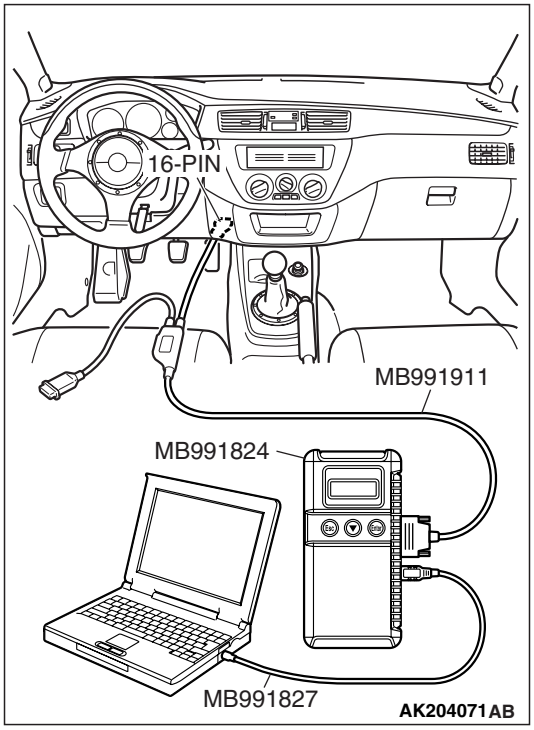

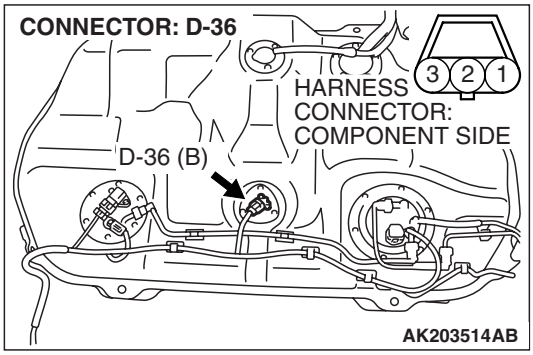

STEP 2. Check harness connector D-36 at the fuel tank temperature sensor for damage.

Q: Is the harness connector in good condition?

YES : Go to Step 3.

NO : Repair or replace it. Refer to GROUP 00E, Harness Connector Inspection P.00E-2. Then go to Step 12.

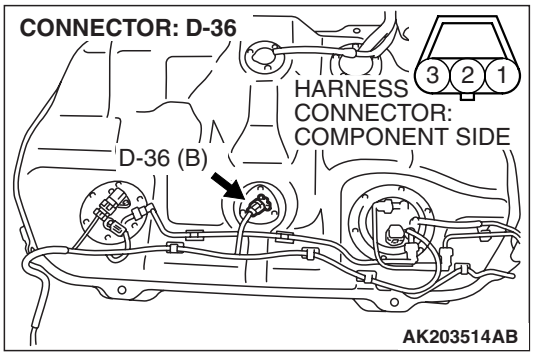

STEP 3. Check the fuel tank temperature sensor.

(1) Disconnect the fuel tank temperature sensor connector D-36.

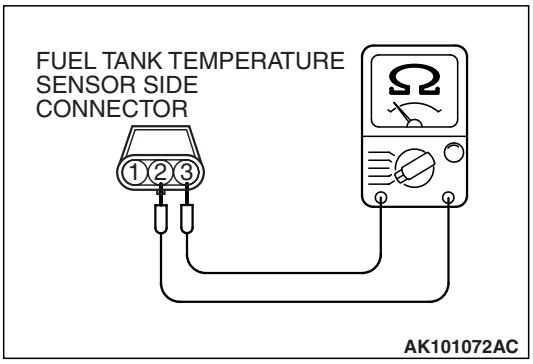

(2) Measure the resistance between terminal No. 2 and No. 3 of the fuel tank temperature sensor.

Standard value:
0.5 – 12.0 kΩ

Q: Is the measured resistance between 0.5 and 12.0 kΩ?

YES : Go to Step 4.

NO : Replace the fuel tank temperature sensor. Then go to Step 12.

STEP 4. Check for continuity at fuel tank temperature sensor harness side connector D-36.

(1) Disconnect connector D-36 and measure at the harness side.

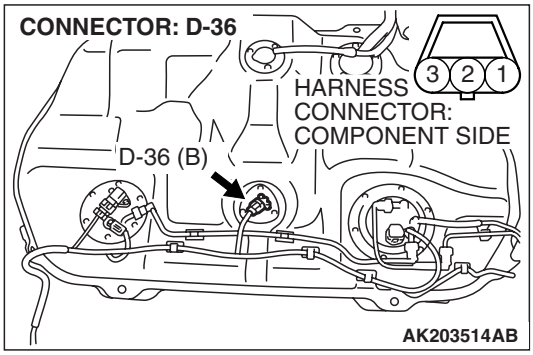

(2) Check for the continuity between terminal No. 2 and ground.
- Should be less than 2 ohms.

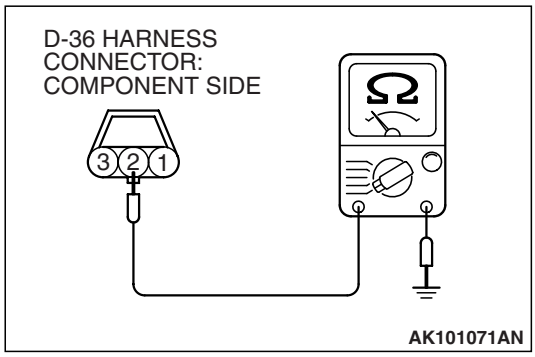

Q: Does continuity exist?

YES : Go to Step 5.

NO : Check harness connector D-34 at intermediate connector for damage, and repair or replace as required. Refer to GROUP 00E, Harness Connector Inspection P.00E-2. If intermediate connector is in good condition, repair harness wire between fuel tank temperature sensor connector D-36 (terminal No. 2) and ground because of open circuit or harness damage. Then go to Step 12.

STEP 5. Measure the sensor supply voltage at fuel tank temperature sensor harness side connector D-36.

(1) Disconnect connector D-36 and measure at the harness side.

(2) Turn the ignition switch to the "ON" position.

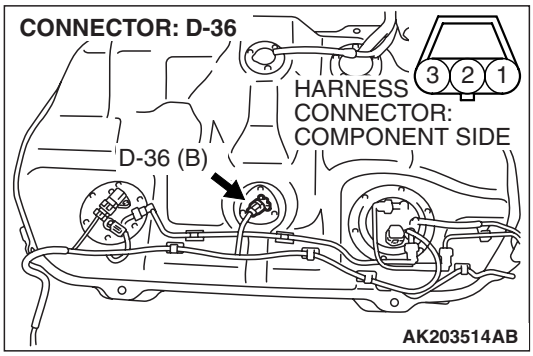

(3) Measure the voltage between terminal No. 3 and ground.
- Voltage should be between 4.5 and 4.9 volts.

(4) Turn the ignition switch to the "LOCK" (OFF) position.

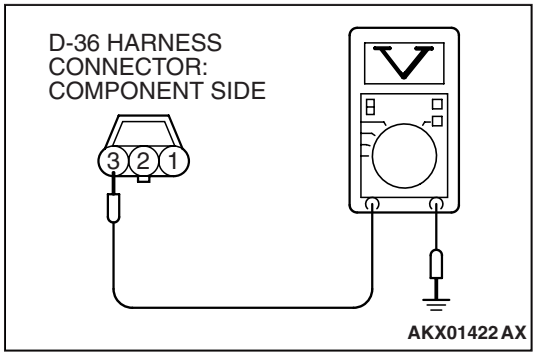

Q: Is the measured voltage between 4.5 and 4.9 volts?

YES : Go to Step 6.

NO : Go to Step 10.

STEP 6. Measure the sensor supply voltage at ECM connector C-117 by backprobing.

(1) Do not disconnect the ECM connector C-117.
(2) Turn the ignition switch to the "ON" position.

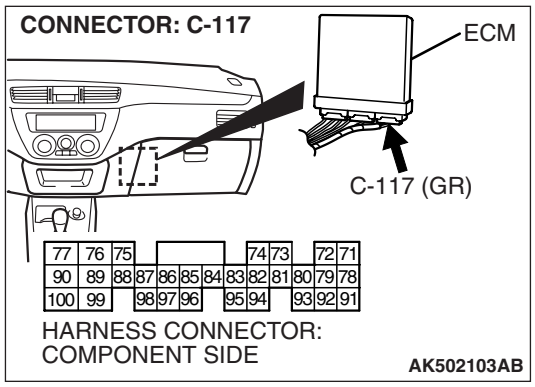

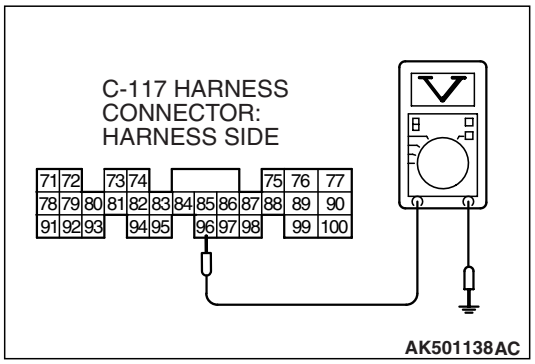

(3) Measure the voltage between terminal No. 96 and ground by backprobing.
- When fuel tank temperature is 0° C (32° F), voltage should be between 2.7 and 3.1 volts.
- When fuel tank temperature is 20° C (68° F), voltage should be between 2.1 and 2.5 volts.
- When fuel tank temperature is 40° C (104° F), voltage should be between 1.6 and 2.0 volts.
- When fuel tank temperature is 80° C (176° F), voltage should be between 0.8 and 1.2 volts.

(4) Turn the ignition switch to the "LOCK" (OFF) position.

Q: Is the measured voltage within the specified range?

YES : Go to Step 7.
NO : Go to Step 8.

STEP 7. Check harness connector C-117 at ECM for damage.

Q: Is the harness connector in good condition?

YES : Check harness connectors C-113, C-122 and D-35 at intermediate connector for damage, and repair or replace as required. Refer to GROUP 00E, Harness Connector Inspection P.00E-2. If intermediate connector are in good condition, repair harness wire between fuel tank pressure sensor connector D-36 (terminal No. 3) and ECM connector C-117 (terminal No. 96) because of open circuit. Then go to Step 12.
NO : Repair or replace it. Refer to GROUP 00E, Harness Connector Inspection P.00E-2. Then go to Step 12.

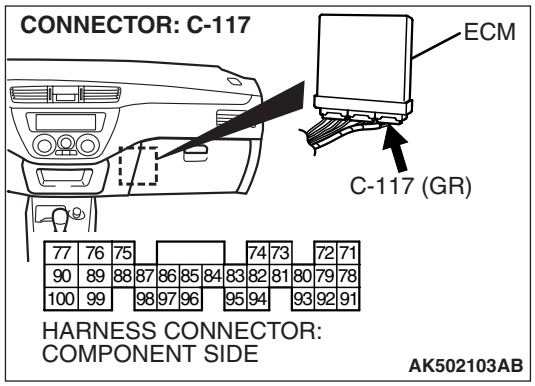

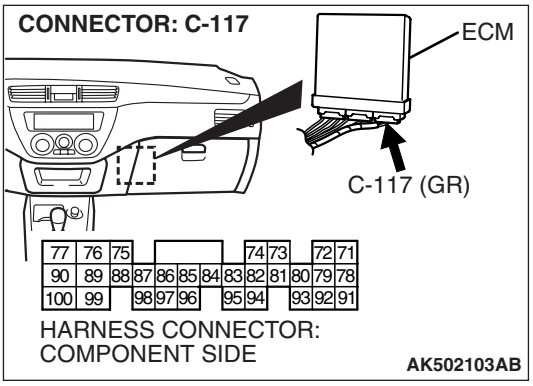

STEP 8. Check harness connector C-117 at ECM for damage.

Q: Is the harness connector in good condition?

YES : Go to Step 9.

NO : Repair or replace it. Refer to GROUP 00E, Harness Connector Inspection P.00E-2. Then go to Step 12.

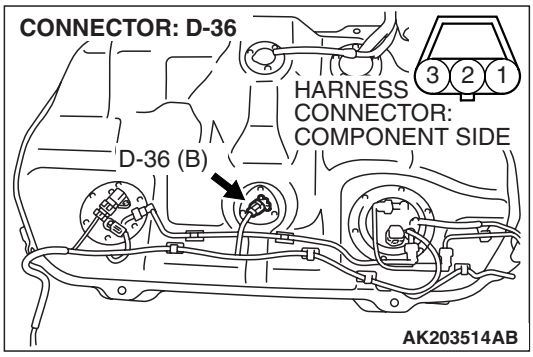

STEP 9. Check for short circuit to ground between fuel tank temperature sensor connector D-36 (terminal No. 3) and ECM connector C-117 (terminal No. 96).

Q: Is the harness wire in good condition?

YES : Replace the ECM. Then go to Step 12.

NO : Repair it. Then go to Step 12.

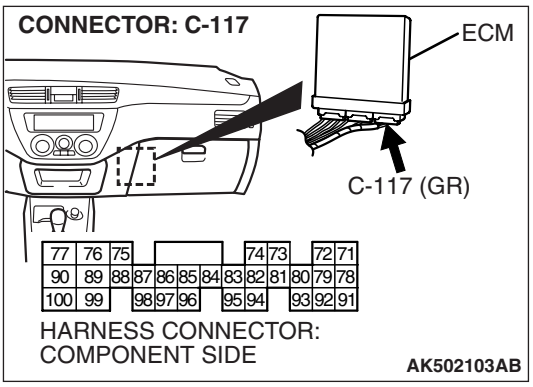

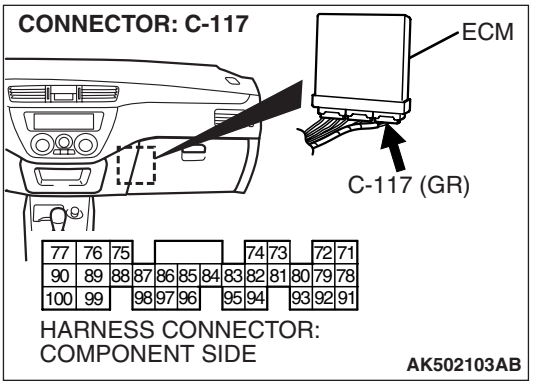

STEP 10. Check harness connector C-117 at ECM for damage.

Q: Is the harness connector in good condition?

YES : Go to Step 11.

NO : Repair or replace it. Refer to GROUP 00E, Harness Connector Inspection P.00E-2. Then go to Step 12.

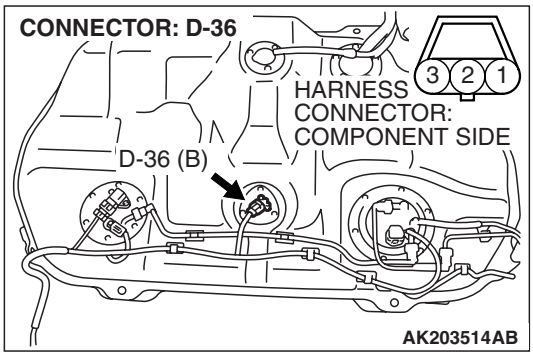

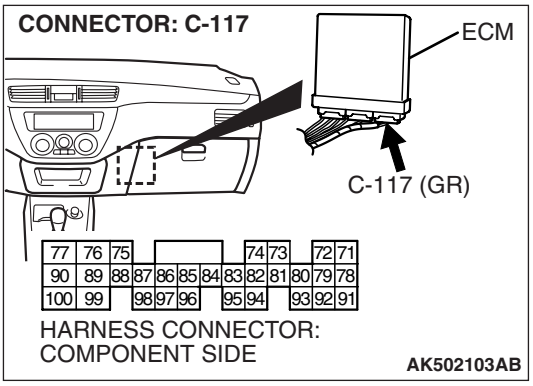

STEP 11. Check for harness damage between fuel tank temperature sensor connector D-36 (terminal No. 3) and ECM connector C-117 (terminal No. 96).

NOTE: Check harness after checking intermediate connectors C-113, C-122 and D-35. If intermediate connector are damaged, repair or replace it. Refer to GROUP 00E, Harness Connector Inspection P.00E-2. Then go to Step 12.

Q: Is the harness wire in good condition?

YES : Replace the ECM. Then go to Step 12.

NO : Repair it. Then go to Step 12.

STEP 12. Test the OBD-II drive cycle.

(1) Carry out a test drive with the drive cycle pattern. Refer to GROUP 13A, Diagnostic Function –OBD-II Drive Cycle – Pattern 13 P.13A-12.

(2) Check the diagnostic trouble code (DTC).

Q: Is DTC P0181 set?

YES : Retry the troubleshooting.

NO : The inspection is complete.

DTC P0182: Fuel Tank Temperature Sensor Circuit Low Input

Fuel Tank Temperature Sensor Circuit

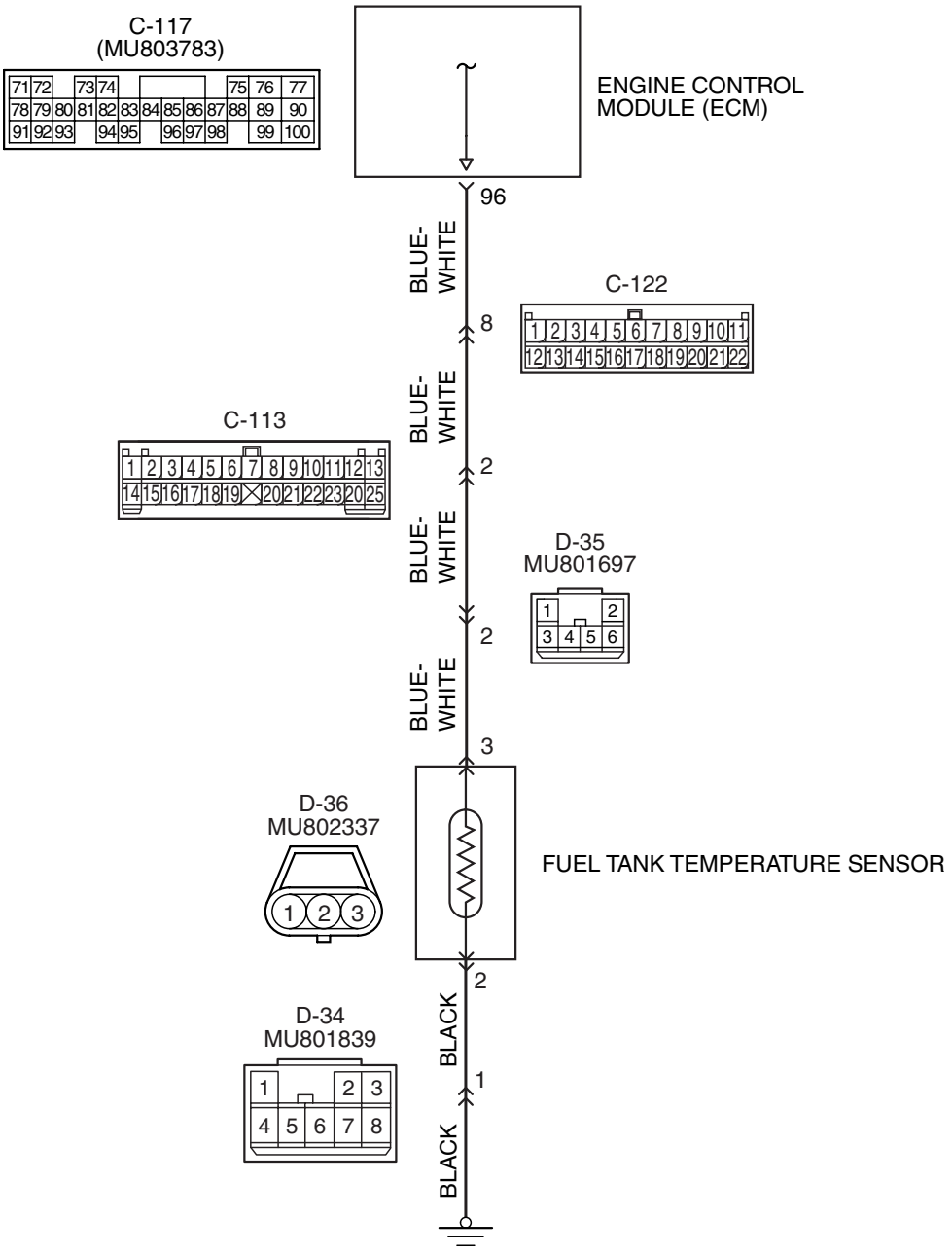

AK502068

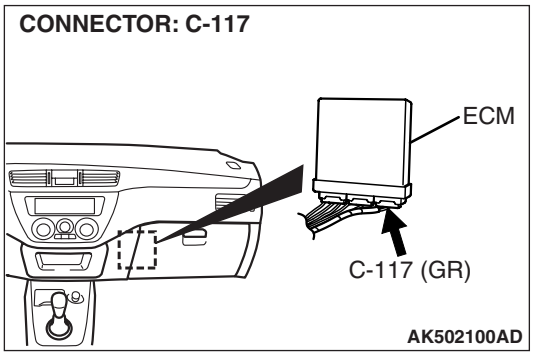

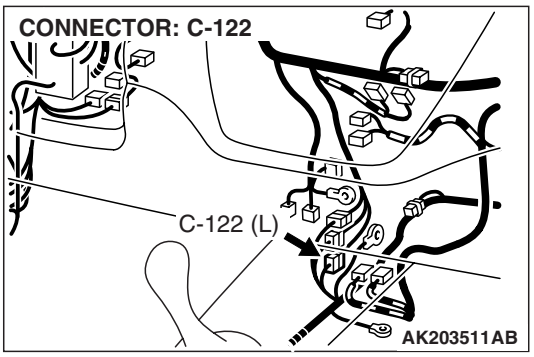

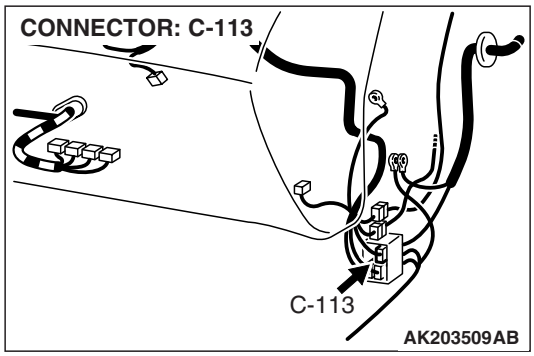

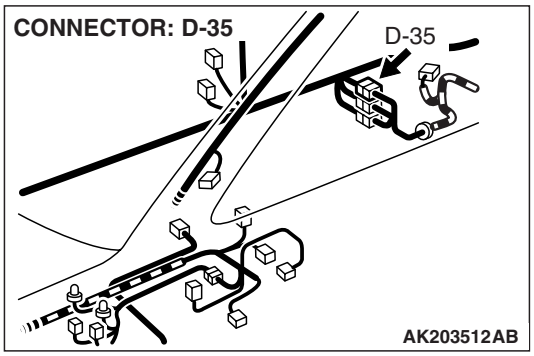

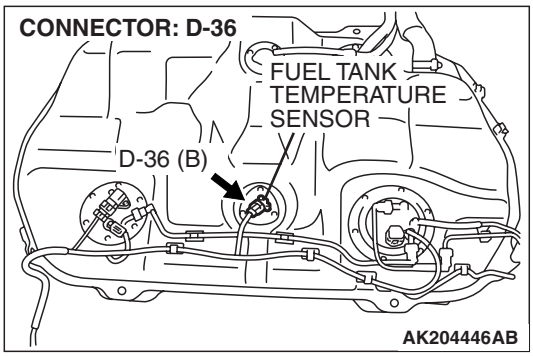

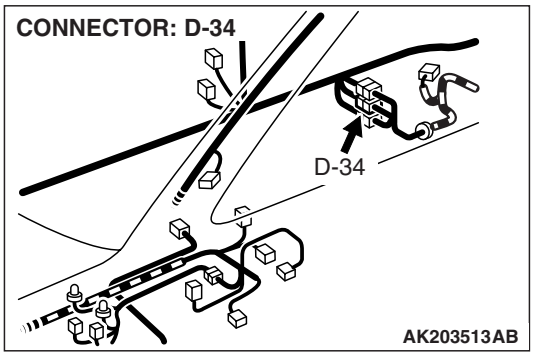

CIRCUIT OPERATION

- 5-volt voltage is applied to the fuel tank temperature sensor output terminal (terminal No. 3) from the ECM (terminal No. 96) via the resistor in the ECM.
- The fuel tank temperature sensor output voltage increases when the resistance increases and decreases when the resistance decreases. The ground terminal (terminal No. 2) is grounded to the vehicle body.

TECHNICAL DESCRIPTION

- The fuel tank temperature sensor converts the fuel tank temperature to a voltage.
- The ECM detects the fuel tank temperature in the fuel tank with this output voltage.

DESCRIPTIONS OF MONITOR METHODS

- Fuel tank temperature sensor output voltage is out of specified range.

MONITOR EXECUTION

- Continuous

MONITOR EXECUTION CONDITIONS (Other monitor and Sensor)

Other Monitor (There is no temporary DTC stored in memory for the item monitored below)

- Not applicable

Sensor (The sensor below is determined to be normal)

- Engine coolant temperature sensor
- Intake air temperature sensor

DTC SET CONDITIONS

Logic Flow Chart

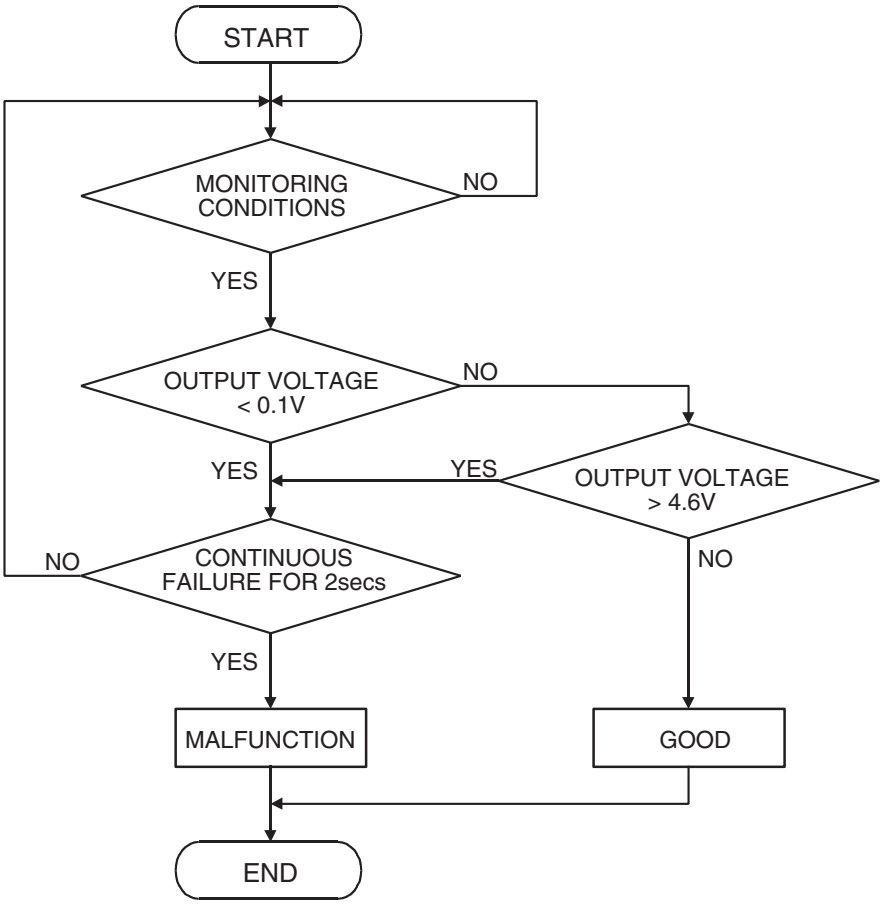

AK301445

Check Condition

- 2 seconds or more have passed since the engine starting sequence was completed.

Judgement Criterion

- Fuel tank temperature sensor output voltage has continued to be 0.1 volt or lower for 2 seconds.

OBD-II DRIVE CYCLE PATTERN

Refer to Diagnostic Function –OBD-II Drive Cycle – Pattern 23 P.13A-12.

TROUBLESHOOTING HINTS (The most likely causes for this code to be set are:)

- Fuel tank temperature sensor failed.
- Shorted fuel tank temperature sensor circuit, or connector damage.
- ECM failed.

DIAGNOSIS

Required Special Tools:

- MB991958: Scan Tool (M.U.T.-III Sub Assembly)
  - MB991824: V.C.I.
  - MB991827: USB Cable
  - MB991911: Main Harness B

TSB Revision

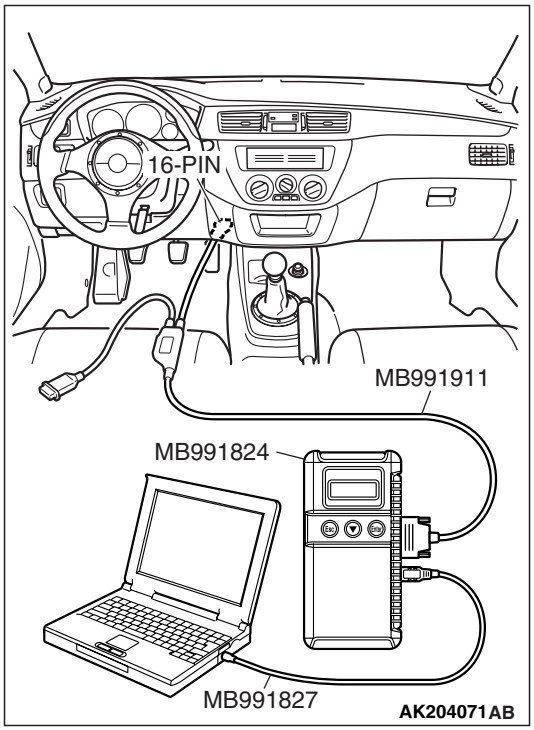

STEP 1. Using scan tool MB991958, check data list item 4A: Fuel Tank Temperature Sensor.

⚠ CAUTION

To prevent damage to scan tool MB991958, always turn the ignition switch to the "LOCK" (OFF) position before connecting or disconnecting scan tool MB991958.

(1) Connect scan tool MB991958 to the data link connector.
(2) Turn the ignition switch to the "ON" position.
(3) Set scan tool MB991958 to the data reading mode for item 4A, Fuel Tank Temperature Sensor.
- With the engine cool, the fuel tank temperature should be approximately the same as ambient air temperature.

(4) Turn the ignition switch to the "LOCK" (OFF) position.

Q: Is the sensor operating properly?

YES : It can be assumed that this malfunction is intermittent. Refer to GROUP 00, How to Use Troubleshooting/Inspection Service Points –How to Cope with Intermittent Malfunctions P.00-13.

NO : Go to Step 2.

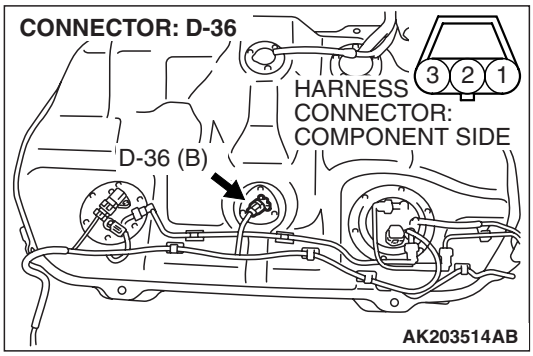

STEP 2. Check the fuel tank temperature sensor.

(1) Disconnect the fuel tank temperature sensor connector D-36.

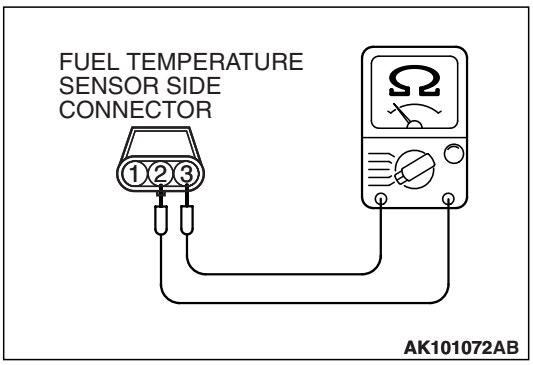

(2) Measure the resistance between terminal No. 2 and No. 3 of the fuel tank temperature sensor.

Standard value:
0.5 – 12.0 kΩ

Q: Is the measured resistance between 0.5 and 12.0 kΩ?

YES : Go to Step 3.

NO : Replace the fuel tank temperature sensor. Then go to Step 5.

STEP 3. Check harness connector D-36 at the fuel tank temperature sensor and harness connector C-117 at ECM for damage.

Q: Is the harness connector in good condition?

YES : Go to Step 4.

NO : Repair or replace it. Refer to GROUP 00E, Harness Connector Inspection P.00E-2. Then go to Step 5.

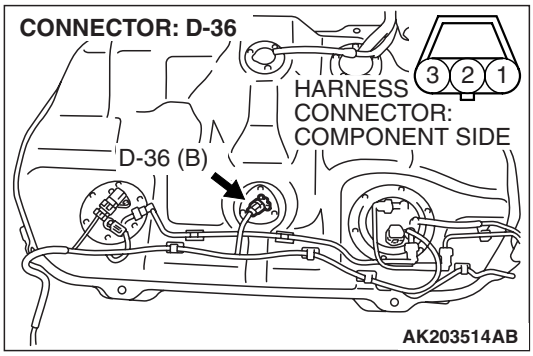

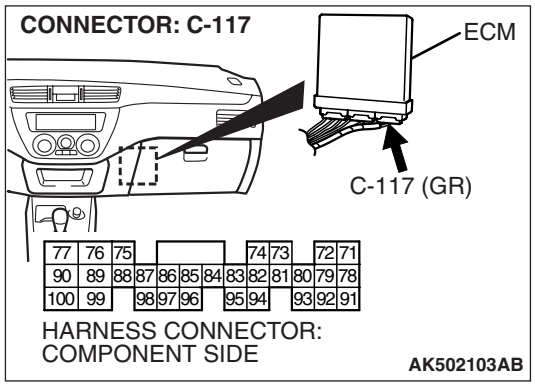

STEP 4. Check for short circuit to ground between fuel tank temperature sensor connector D-36 (terminal No. 3) and ECM connector C-117 (terminal No. 96).

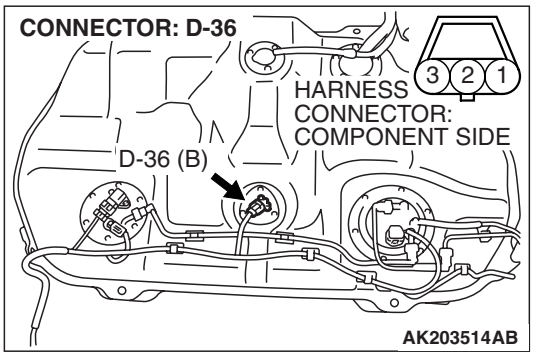

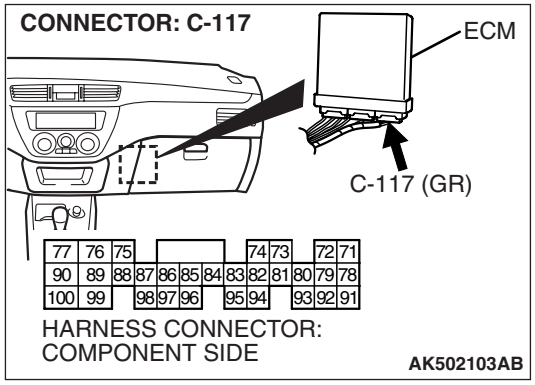

NOTE: Check harness after checking intermediate connectors C-113, C-122 and D-35. If any of the intermediate connectors are damaged, repair or replace it. Refer to GROUP 00E, Harness Connector Inspection P.00E-2. Then go to Step 5.

Q: Is the harness wire in good condition?

YES : Replace the ECM. Then go to Step 5.
NO : Repair it. Then go to Step 5.

STEP 5. Test the OBD-II drive cycle.

(1) Carry out a test drive with the drive cycle pattern. Refer to GROUP 13A, Diagnostic Function –OBD-II Drive Cycle – Pattern 23 P.13A-12.
(2) Check the diagnostic trouble code (DTC).

Q: Is DTC P0182 set?

YES : Retry the troubleshooting.
NO : The inspection is complete.

DTC P0183: Fuel Tank Temperature Sensor Circuit High Input

Fuel Tank Temperature Sensor Circuit

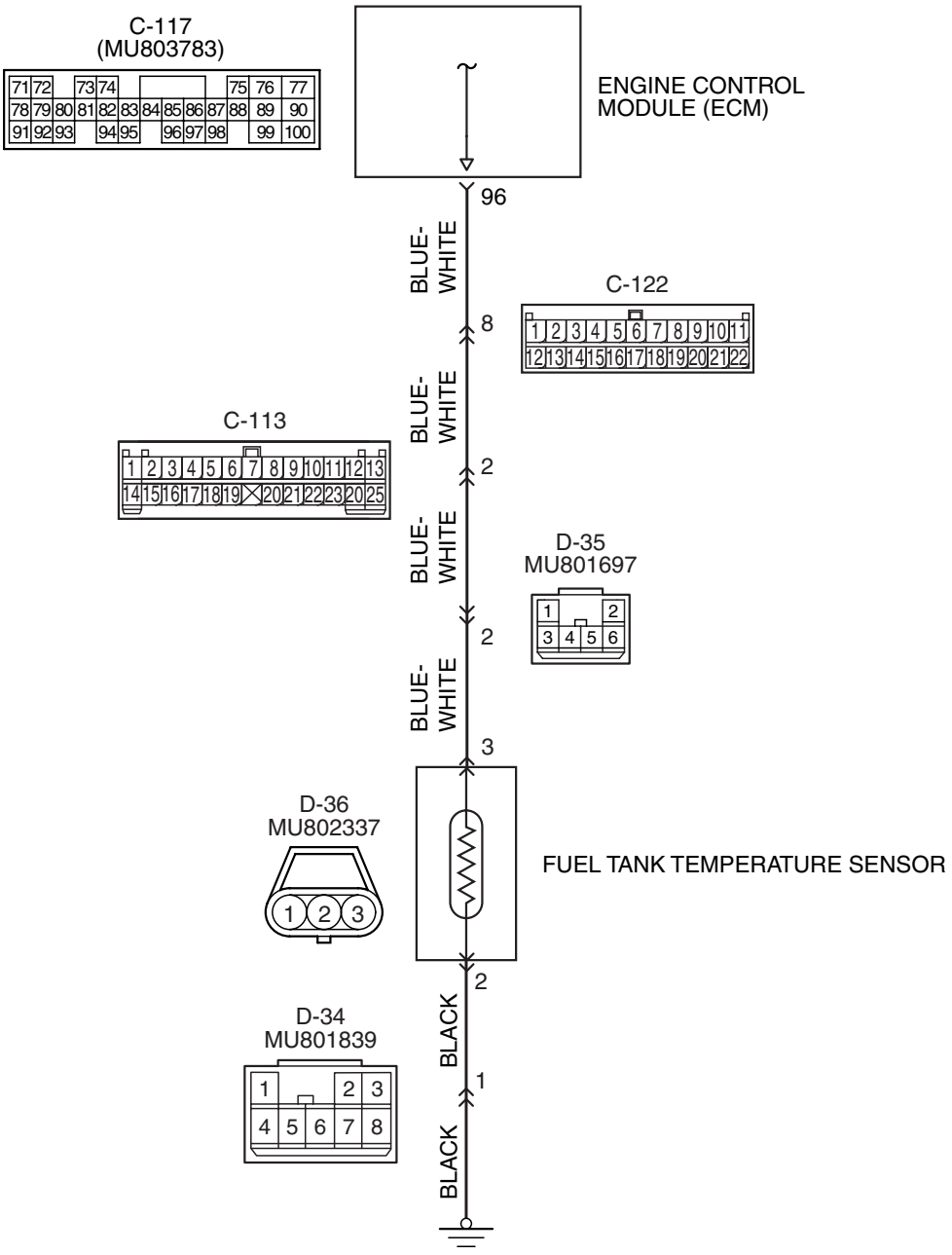

AK502068

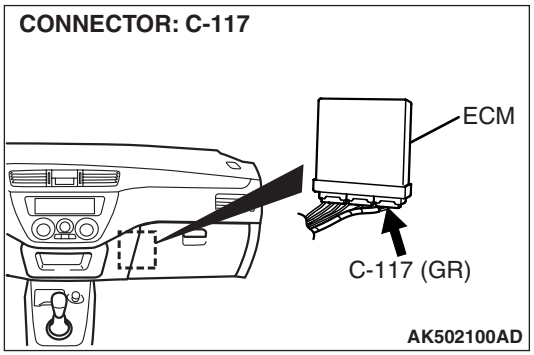

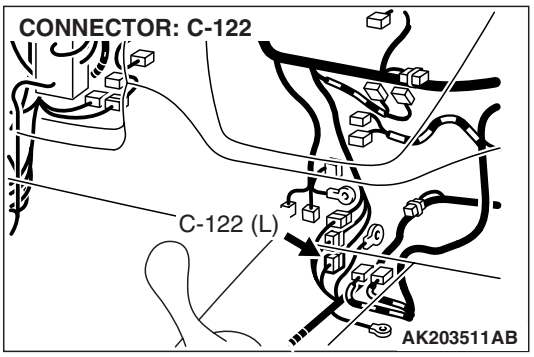

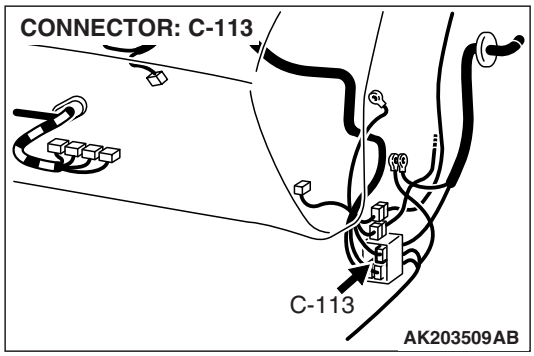

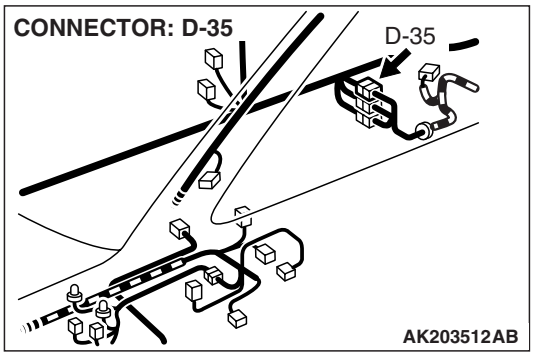

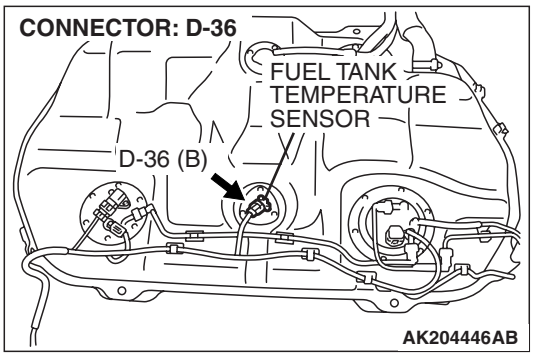

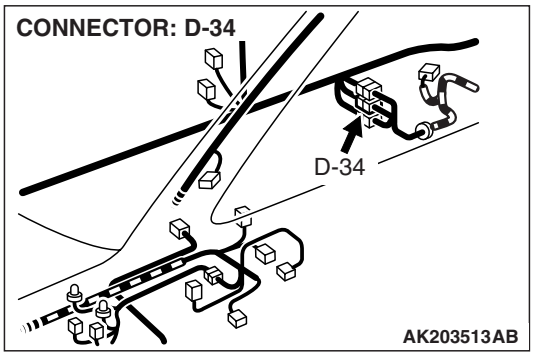

CIRCUIT OPERATION

- 5-volt voltage is applied to the fuel tank temperature sensor output terminal (terminal No. 3) from the ECM (terminal No. 96) via the resistor in the ECM.
- The fuel tank temperature sensor output voltage increases when the resistance increases and decreases when the resistance decreases. The ground terminal (terminal No. 2) is grounded to the vehicle body.

TECHNICAL DESCRIPTION

- The fuel tank temperature sensor converts the fuel tank temperature to a voltage.
- The ECM detects the fuel tank temperature in the fuel tank with this output voltage.

DESCRIPTIONS OF MONITOR METHODS

- Fuel tank temperature sensor output voltage is out of specified range.

MONITOR EXECUTION

- Continuous

MONITOR EXECUTION CONDITIONS (Other monitor and Sensor)

Other Monitor (There is no temporary DTC stored in memory for the item monitored below)

- Not applicable

Sensor (The sensor below is determined to be normal)

- Engine coolant temperature sensor
- Intake air temperature sensor

DTC SET CONDITIONS

Logic Flow Chart

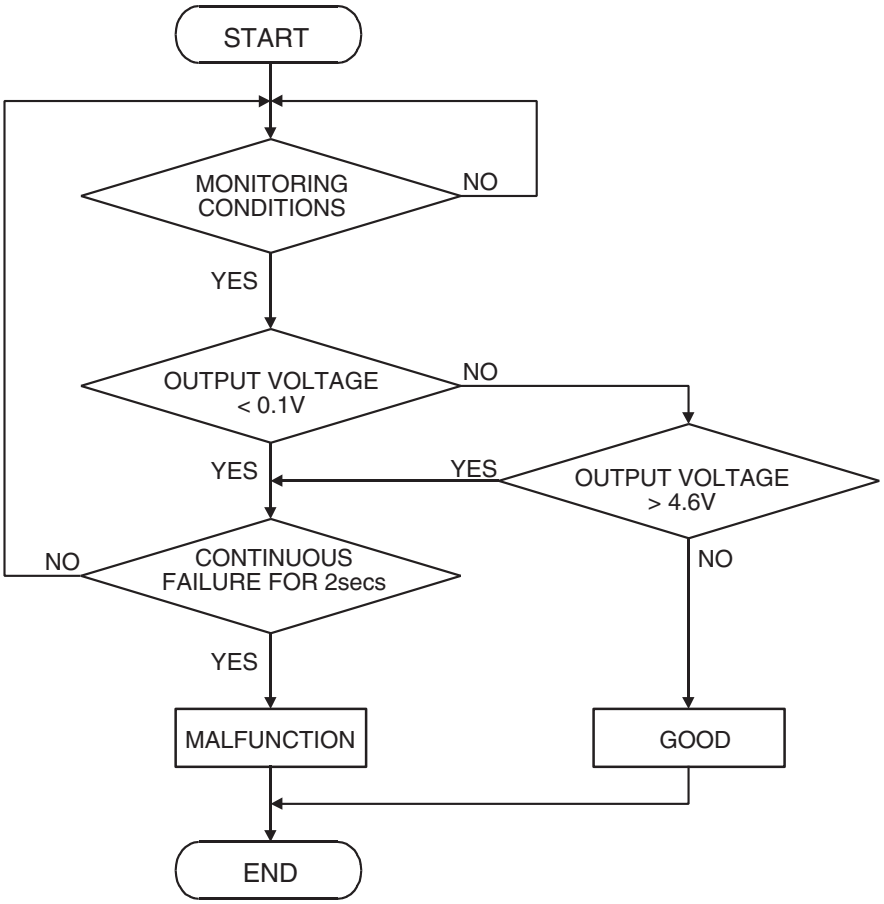

AK301445

Check Condition

- 2 seconds or more have passed since the engine starting sequence was completed.

Judgement Criterion

- Fuel tank temperature sensor output voltage has continued to be 4.6 volts or higher for 2 seconds.

OBD-II DRIVE CYCLE PATTERN

Refer to Diagnostic Function –OBD-II Drive Cycle – Pattern 23 P.13A-12.

TROUBLESHOOTING HINTS (The most likely causes for this code to be set are:)

- Fuel tank temperature sensor failed.
- Open fuel tank temperature sensor circuit, harness damage, or connector damage.
- ECM failed.

DIAGNOSIS

Required Special Tools:

- MB991958: Scan Tool (M.U.T.-III Sub Assembly)
  - MB991824: V.C.I.
  - MB991827: USB Cable
  - MB991911: Main Harness B

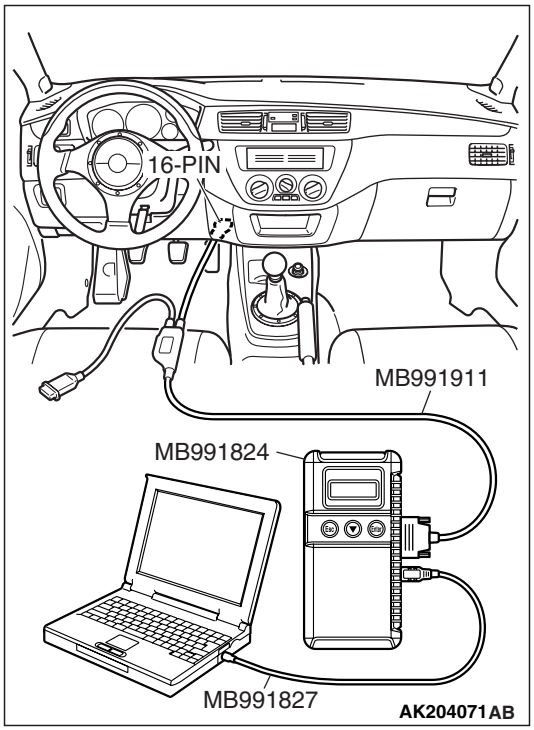

STEP 1. Using scan tool MB991958, check data list item 4A: Fuel Tank Temperature Sensor.

⚠ CAUTION

To prevent damage to scan tool MB991958, always turn the ignition switch to the "LOCK" (OFF) position before connecting or disconnecting scan tool MB991958.

(1) Connect scan tool MB991958 to the data link connector.
(2) Turn the ignition switch to the "ON" position.
(3) Set scan tool MB991958 to the data reading mode for item 4A, Fuel Tank Temperature Sensor.
- With the engine cool, the fuel tank temperature should be approximately the same as ambient air temperature.

(4) Turn the ignition switch to the "LOCK" (OFF) position.

Q: Is the sensor operating properly?

YES : It can be assumed that this malfunction is intermittent. Refer to GROUP 00, How to Use Troubleshooting/Inspection Service Points –How to Cope with Intermittent Malfunctions P.00-13.

NO : Go to Step 2.

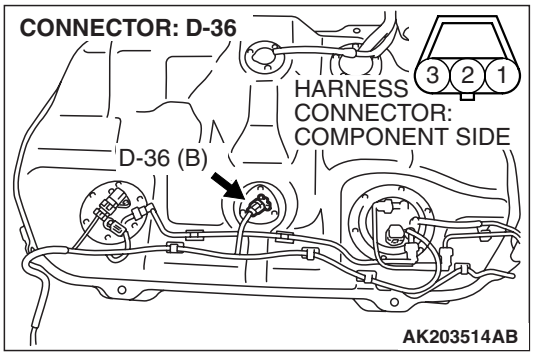

STEP 2. Check harness connector D-36 at the fuel tank temperature sensor for damage.

Q: Is the harness connector in good condition?

YES : Go to Step 3.

NO : Repair or replace it. Refer to GROUP 00E, Harness Connector Inspection P.00E-2. Then go to Step 11.

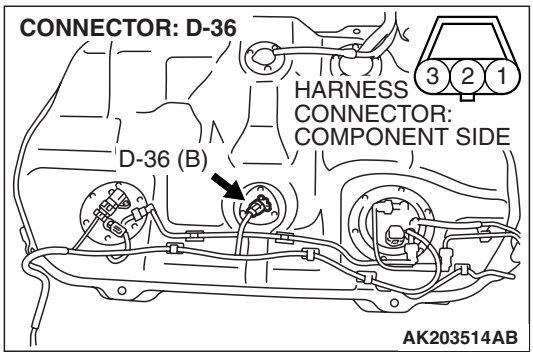

STEP 3. Check the fuel tank temperature sensor.

(1) Disconnect the fuel tank temperature sensor connector D-36.

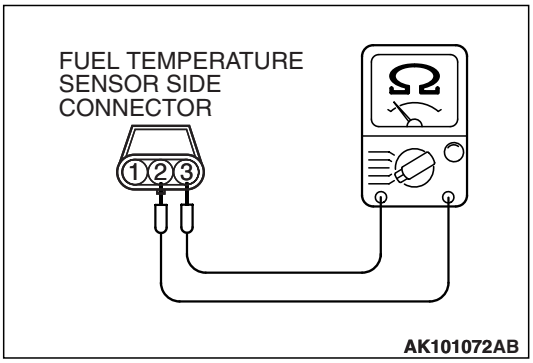

(2) Measure the resistance between terminal No. 2 and No. 3 of the fuel tank temperature sensor.

Standard value:
0.5 – 12.0 kΩ

Q: Is the measured resistance between 0.5 and 12.0 kΩ?

YES : Go to Step 4.
NO : Replace the fuel tank temperature sensor. Then go to Step 11.

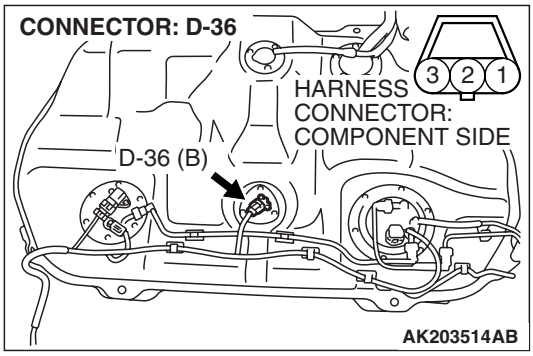

STEP 4. Measure the sensor supply voltage at fuel tank temperature sensor harness side connector D-36.

(1) Disconnect connector D-36 and measure at the harness side.
(2) Turn the ignition switch to the "ON" position.

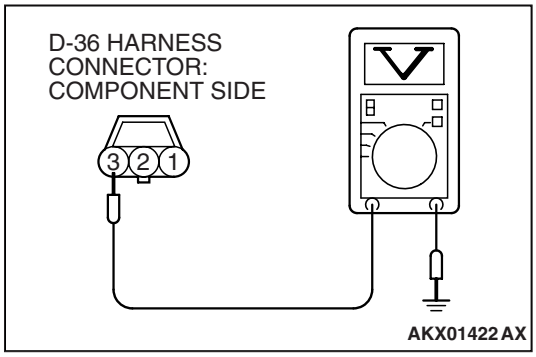

(3) Measure the voltage between terminal No. 3 and ground.
- Voltage should be between 4.5 and 4.9 volts

(4) Turn the ignition switch to the "LOCK" (OFF) position.

Q: Is the measured voltage between 4.5 and 4.9 volts?

YES : Go to Step 8.
NO : Go to Step 5.

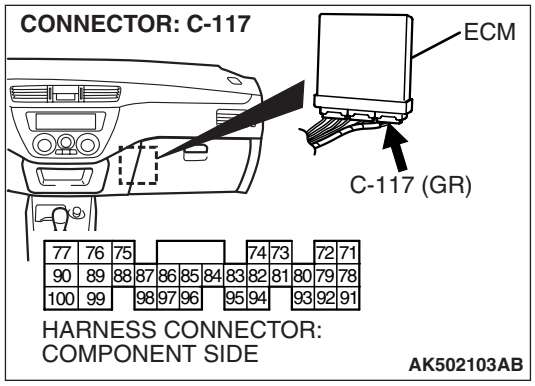

STEP 5. Measure the sensor supply voltage at ECM connector C-117 by backprobing.

(1) Do not disconnect the ECM connector C-117.
(2) Disconnect the fuel tank temperature sensor connector D-10.
(3) Turn the ignition switch to the "ON" position.

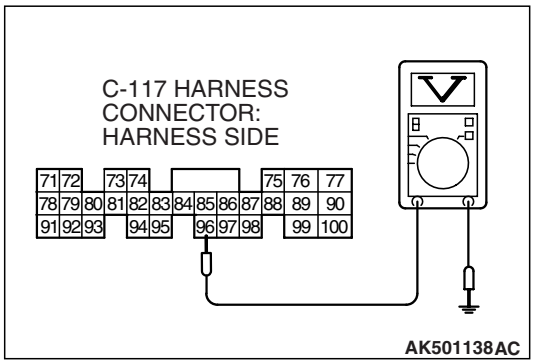

(4) Measure the voltage between terminal No. 96 and ground by backprobing.
- Voltage should be between 4.5 and 4.9 volts.

(5) Turn the ignition switch to the "LOCK" (OFF) position.

Q: Is the measured voltage between 4.5 and 4.9 volts?

YES : Go to Step 6.
NO : Go to Step 7.

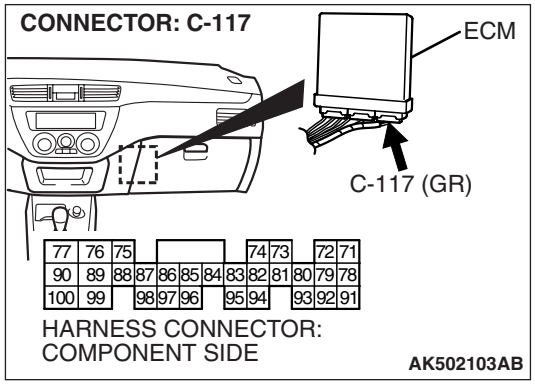

STEP 6. Check harness connector C-117 at ECM for damage.

Q: Is the harness connector in good condition?

YES : Check harness connectors C-113, C-122 and D-35 at intermediate connectors for damage, and repair or replace as required. Refer to GROUP 00E, Harness Connector Inspection P.00E-2. If the intermediate connectors are in good condition, repair the harness wire between fuel tank temperature sensor connector D-36 (terminal No. 3) and ECM connector C-117 (terminal No. 96) because of open circuit. Then go to Step 11.
NO : Repair or replace it. Refer to GROUP 00E, Harness Connector Inspection P.00E-2. Then go to Step 11.

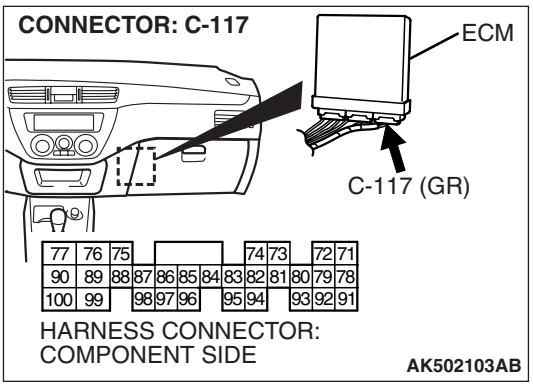

STEP 7. Check harness connector C-117 at ECM for damage.

Q: Is the harness connector in good condition?

YES : Replace the ECM. Then go to Step 11.

NO : Repair or replace it. Refer to GROUP 00E, Harness Connector Inspection P.00E-2. Then go to Step 11.

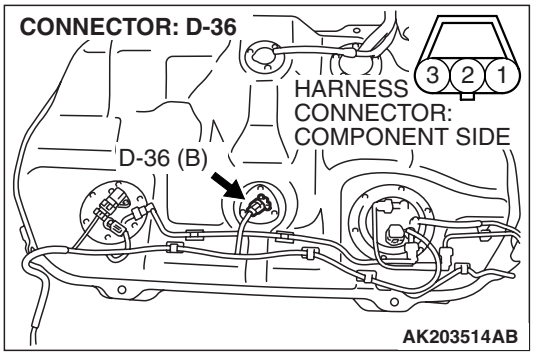

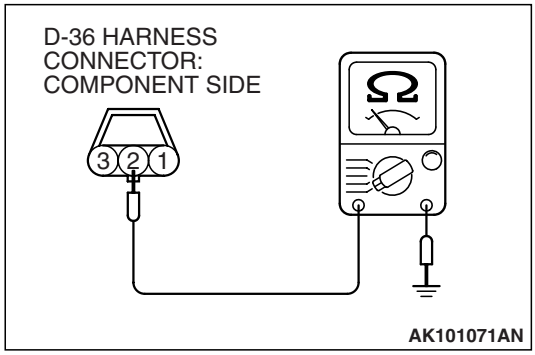

STEP 8. Check for continuity at fuel tank temperature sensor harness side connector D-36.

(1) Disconnect connector D-36 and measure at the harness side.

(2) Check for the continuity between terminal No. 2 and ground.

- Should be less than 2 ohms.

Q: Does continuity exist?

YES : Go to Step 9.

NO : Check connector D-34 at intermediate connector for damage, and repair or replace as required. Refer to GROUP 00E, Harness Connector Inspection P.00E-2. If the intermediate connector is in good condition, repair the harness wire between fuel tank temperature sensor connector D-36 (terminal No. 2) and ground because of open circuit or harness damage. Then go to Step 11.

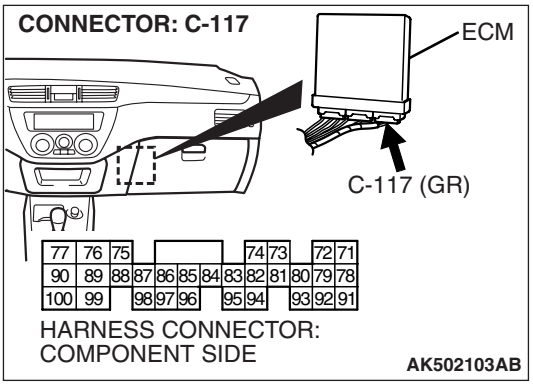

STEP 9. Check harness connector C-117 at ECM for damage.

Q: Is the harness connector in good condition?

YES : Go to Step 10.

NO : Repair or replace it. Refer to GROUP 00E, Harness Connector Inspection P.00E-2. Then go to Step 11.

STEP 10. Check for open circuit and harness damage between fuel tank temperature sensor connector D-36 (terminal No. 3) and ECM connector C-117 (terminal No. 96).

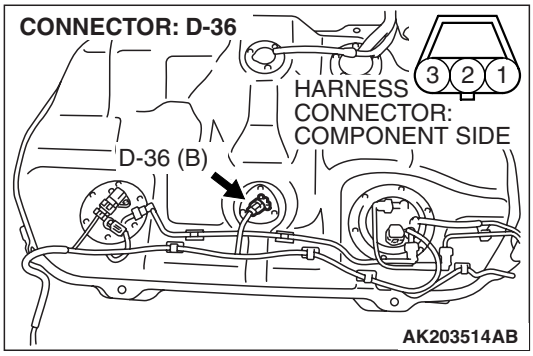

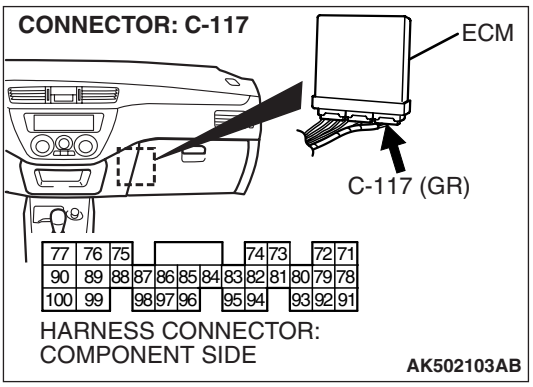

NOTE: Check harness after checking intermediate connectors C-113, C-122 and D-35. If any of the intermediate connectors are damaged, repair or replace it. Refer to GROUP 00E, Harness Connector Inspection P.00E-2. Then go to Step 11.

Q: Is the harness wire in good condition?

YES : Replace the ECM. Then go to Step 11.
NO : Repair it. Then go to Step 11.

STEP 11. Test the OBD-II drive cycle.

(1) Carry out a test drive with the drive cycle pattern. Refer to GROUP 13A, Diagnostic Function –OBD-II Drive Cycle – Pattern 23 P.13A-12.
(2) Check the diagnostic trouble code (DTC).

Q: Is DTC P0183 set?

YES : Retry the troubleshooting.
NO : The inspection is complete.

DTC P0201: Injector Circuit –Cylinder 1, DTC P0202: Injector Circuit –Cylinder 2, DTC P0203: Injector Circuit –Cylinder 3, DTC P0204: Injector Circuit –Cylinder 4

Injector Circuit

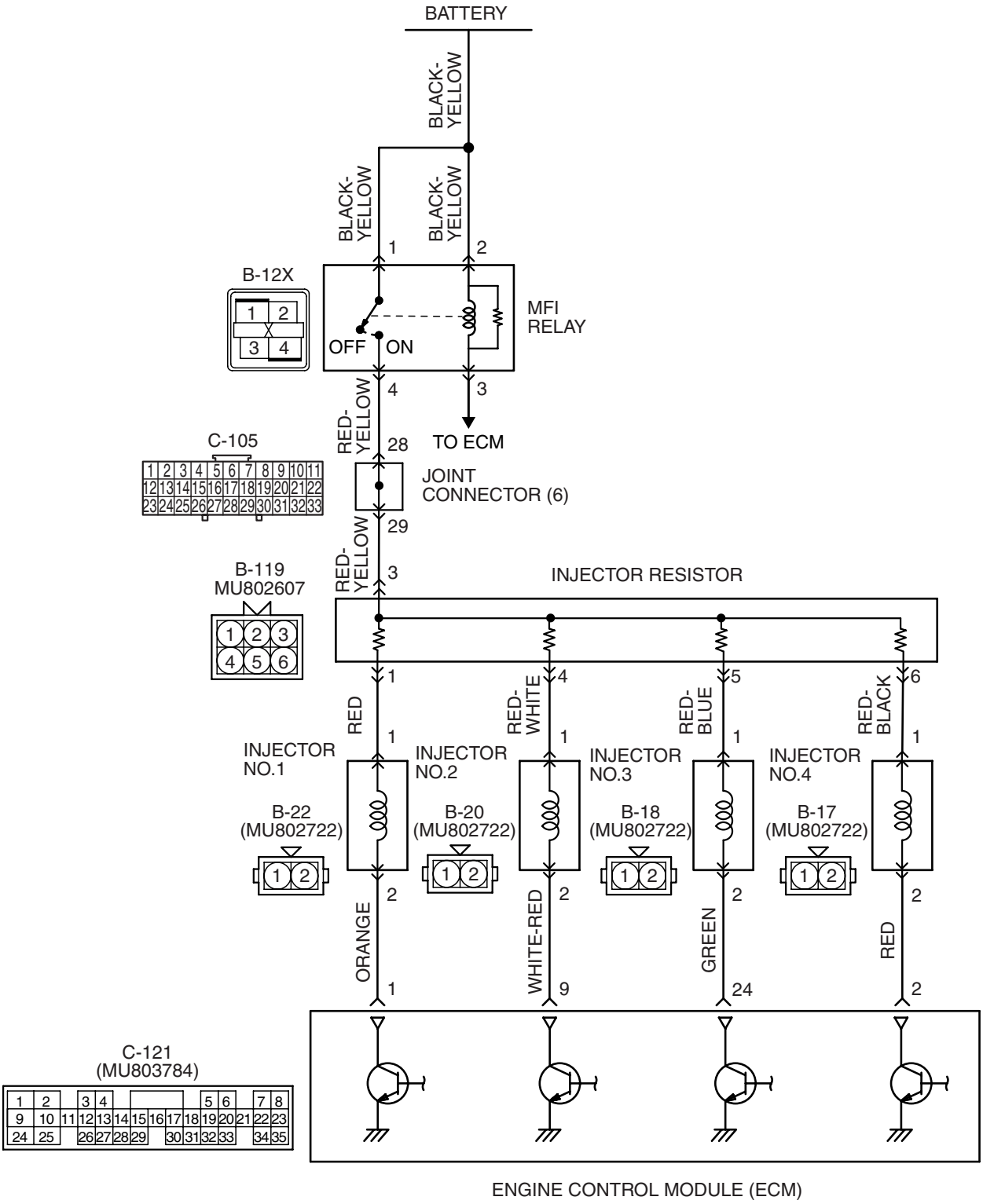

AK502069

TSB Revision

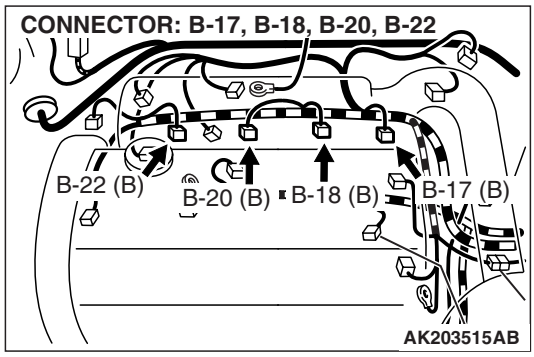

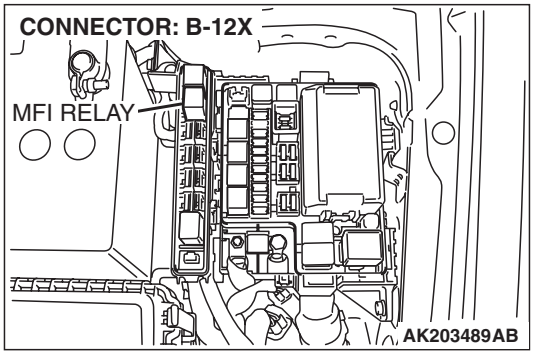

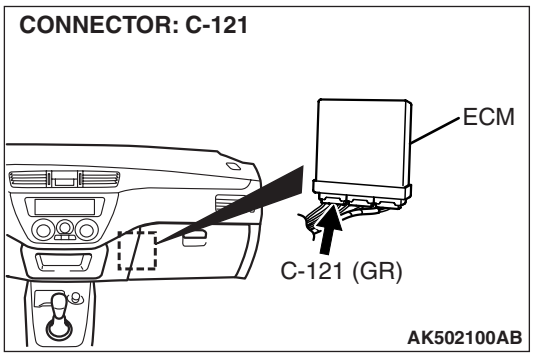

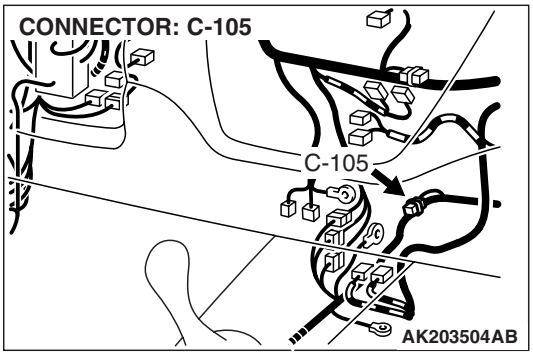

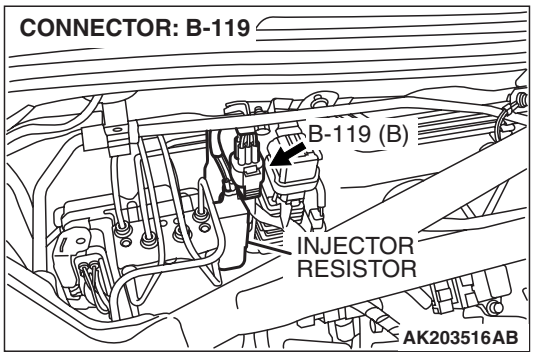

CIRCUIT OPERATION

- The power for the injector is supplied by the No. 4 terminal of the MFI relay via an injector resistor.
- The ECM controls the injector by turning the power transistor in the ECM "ON" and "OFF".

TECHNICAL DESCRIPTION

- The amount of fuel injected by the injector is controlled by the amount of continuity time the coil is grounded by the ECM.
- A surge voltage is generated when the injectors are driven and the current flowing to the injector coil is shut off.
- The ECM checks this surge voltage.

DESCRIPTIONS OF MONITOR METHODS

- Off-surge does not occur after injector is operated.

MONITOR EXECUTION

- Continuous

MONITOR EXECUTION CONDITIONS (Other monitor and Sensor)

Other Monitor (There is no temporary DTC stored in memory for the item monitored below)

- Not applicable

Sensor (The sensor below is determined to be normal)

- Not applicable

DTC SET CONDITIONS

Logic Flow Chart

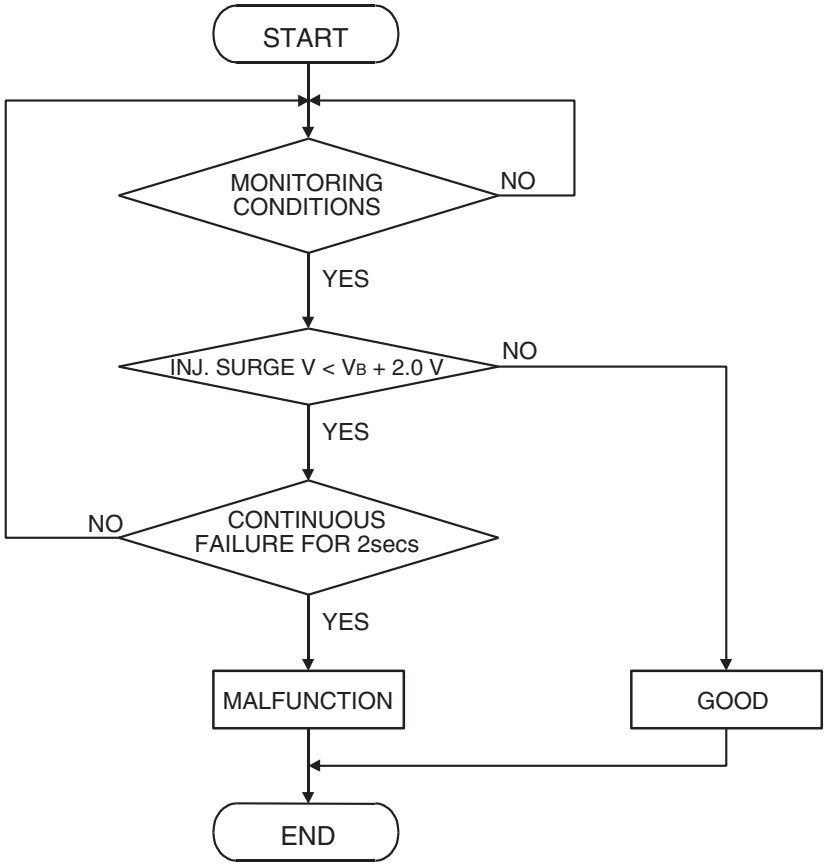

AK204052

Check Condition

- Engine is running.

Judgment Criterion

- Injector coil surge voltage (battery positive voltage + 2 volts) has not been detected for 2 seconds.

OBD-II DRIVE CYCLE PATTERN

Refer to Diagnostic Function –OBD-II Drive Cycle – Pattern 23 P.13A-12.

TROUBLESHOOTING HINTS (The most likely causes for this code to be set are:)

- Injector failed.
- Injector resistor failed.
- Open or shorted injector circuit, harness damage, or connector damage.
- ECM failed.

DIAGNOSIS

Required Special Tools:

- MB991958: Scan Tool (M.U.T.-III Sub Assembly)
  - MB991824: V.C.I.
  - MB991827: USB Cable
  - MB991911: Main Harness B
- MB991348: Test Harness Set

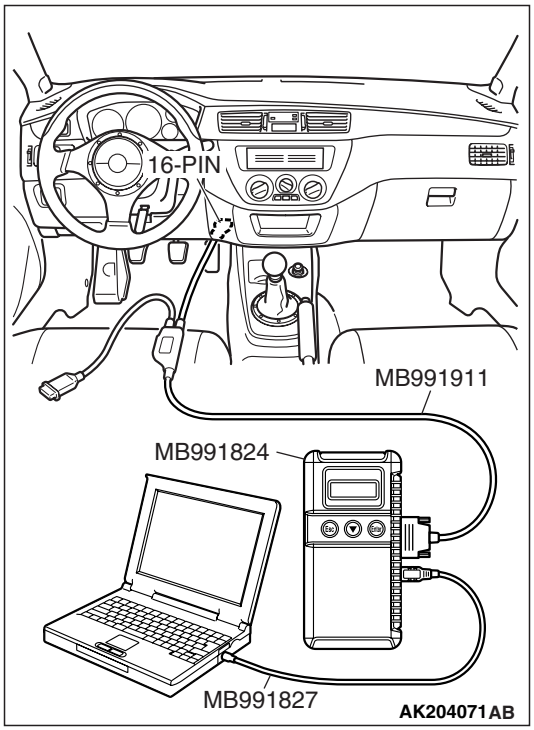

STEP 1. Using scan tool MB991958, check actuator test item 01, 02, 03, 04: Injectors.

⚠ CAUTION

To prevent damage to scan tool MB991958, always turn the ignition switch to the "LOCK" (OFF) position before connecting or disconnecting scan tool MB991958.

(1) Connect scan tool MB991958 to the data link connector.
(2) Start the engine and run at idle.
(3) Set scan tool MB991958 to the actuator testing mode for item 01, 02, 03, 04 Injectors.
(4) Warm up the engine to normal operating temperature: 80° C to 95° C (176° F to 203° F).
- The idle should become slightly rougher.

(5) Turn the ignition switch to the "LOCK" (OFF) position.

Q: Is the actuator operating properly?

YES : It can be assumed that this malfunction is intermittent. Refer to GROUP 00, How to Use Troubleshooting/Inspection Service Points –How to Cope with Intermittent Malfunctions P.00-13.

NO : Go to Step 2.

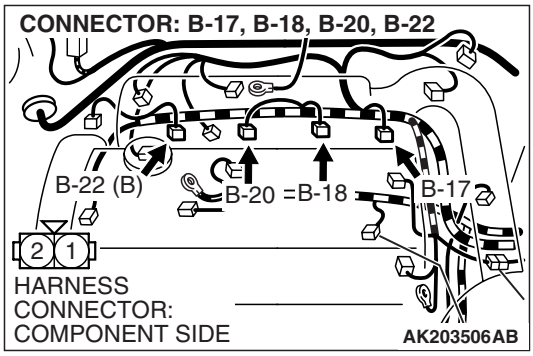

STEP 2. Check the harness connector at injector for damage.

a. Check connector B-22 at No. 1 cylinder.
b. Check connector B-20 at No. 2 cylinder.
c. Check connector B-18 at No. 3 cylinder.
d. Check connector B-17 at No. 4 cylinder.

Q: Is the harness connector in good condition?

YES : Go to Step 3.

NO : Repair or replace it. Refer to GROUP 00E, Harness Connector Inspection P.00E-2. Then go to Step 14.

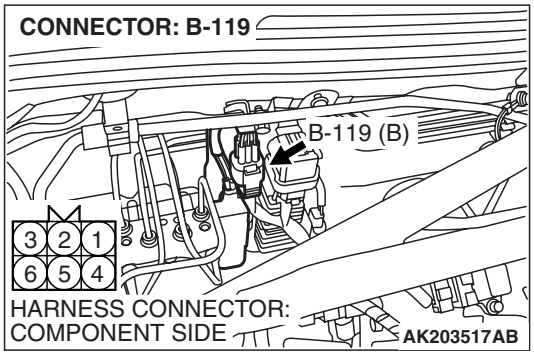

STEP 3. Check harness connector B-119 at injector resistor for damage.

Q: Is the harness connector in good condition?

YES : Go to Step 4.

NO : Repair or Replace it. Refer to GROUP 00E, Harness Connector Inspection P.00E-2. Then go to Step 14.

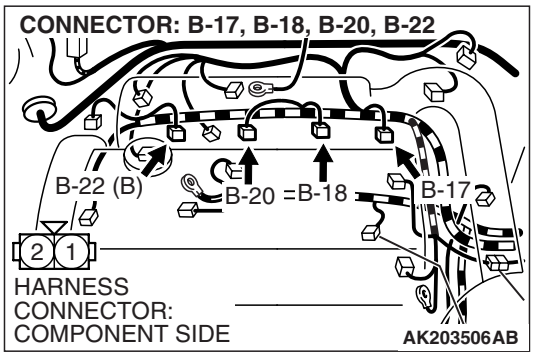

STEP 4. Check the injector.

(1) Disconnect the injector connector B-22 <No. 1 cylinder> or B-20 <No. 2 cylinder> or B-18 <No. 3 cylinder> or B-17 <No.4 cylinder>.

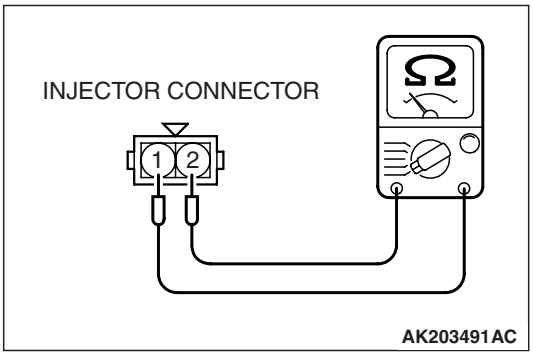

(2) Measure the resistance between injector side connector terminal No. 1 and No. 2.

Standard value: 2 – 3 ohms [at 20° C (68° F)]

Q: Is the measured resistance between 2 and 3 ohms [at 20° C (68° F)]?

YES : Go to Step 5.

NO : Replace the injector. Then go to Step 14.

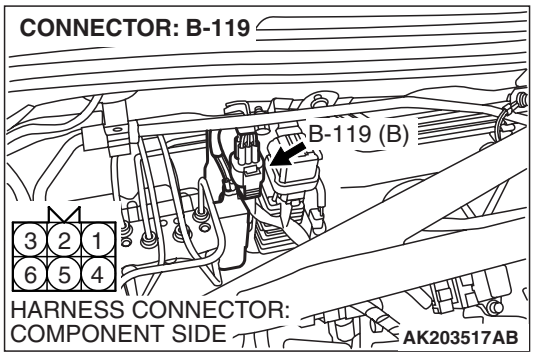

STEP 5. Check the injector resistor.

(1) Disconnect the injector resistor connector B-119.

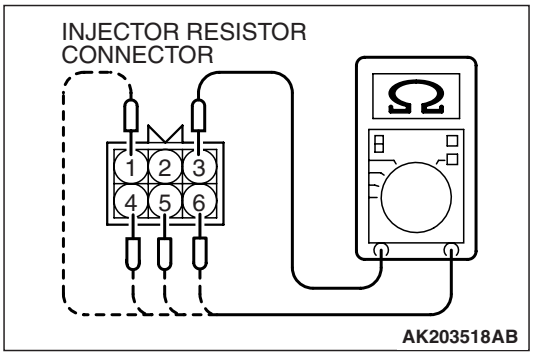

(2) Measure the resistance between the terminals in the connector of the injector resistor.

Standard value:

Measured terminals	Resistance
1 – 3	5.8 – 6.2 ohms [at 20° C (68° F)]
4 – 3	
5 – 3	
6 – 3	

Q: Is the measured resistance between 5.8 and 6.2 ohms [at 20° C (68° F)]?

YES : Go to Step 6.

NO : Replace the injector resistor. Then go to Step 14.

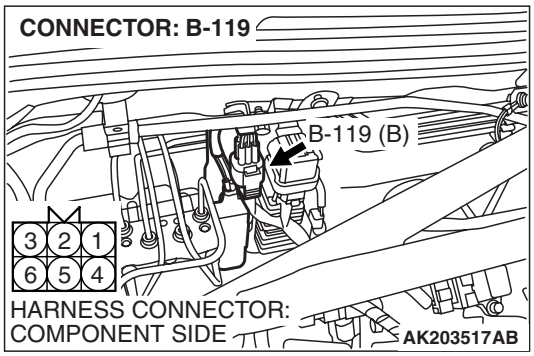

STEP 6. Measure the power supply voltage at injector resistor.

(1) Disconnect the connector B-119 and measure the harness side.

(2) Turn the ignition switch to the "ON" position.

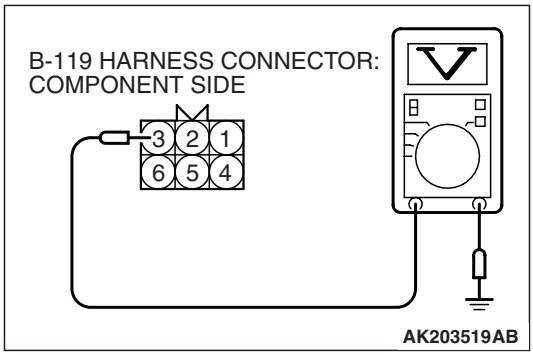

(3) Measure the voltage between terminal No. 3 and ground.
- Voltage should be battery positive voltage.

(4) Turn the ignition switch to the "LOCK" (OFF) position.

Q: Is battery positive voltage (approximately 12 volts) present?

YES : Go to Step 8.

NO : Go to Step 7.

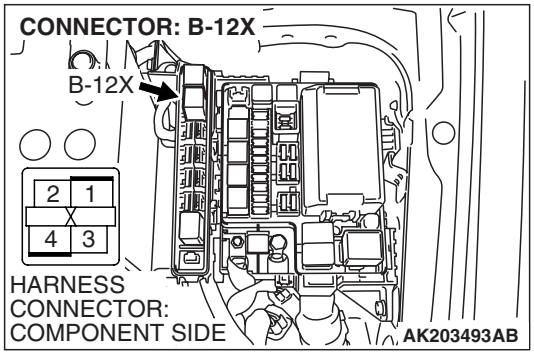

STEP 7. Check harness connector B-12X at MFI relay for damage.

Q: Is the harness connector in good condition?

YES : Check harness connector C-105 at intermediate connector for damage, and repair or replace as required. Refer to GROUP 00E, Harness Connector Inspection P.00E-2. If the intermediate connector is in good condition, repair the harness wire between MFI relay connector B-12X (terminal No. 4) and injector resistor connector B-119 (terminal No. 3) because of open circuit or short circuit to ground. Then go to Step 14.

NO : Repair or replace it. Refer to GROUP 00E, Harness Connector Inspection P.00E-2. Then go to Step 14.

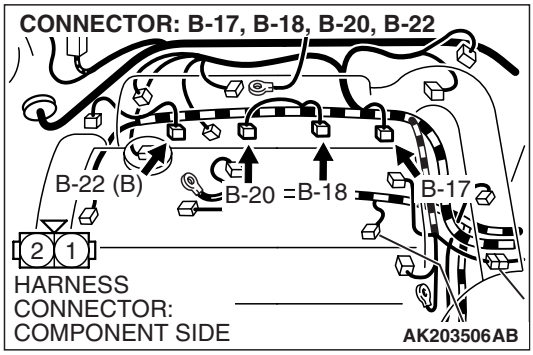

STEP 8. Measure the power supply voltage at injector connector.

(1) Disconnect connector B-22 <No. 1 cylinder> or B-20 <No. 2 cylinder> or B-18 <No. 3 cylinder> or B-17 <No. 4 cylinder> and measure at the harness side.

(2) Turn the ignition switch to the "ON" position.

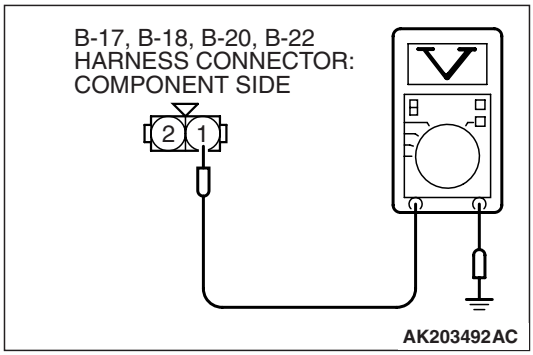

(3) Measure the voltage between terminal No. 1 and ground.
- Voltage should be battery positive voltage.

(4) Turn the ignition switch to the "LOCK" (OFF) position.

Q: Is battery positive voltage (approximately 12 volts) present?

YES : Go to Step 9.

NO : Repair harness wire between injector resistor connector and injector connector because of open circuit or short circuit to ground.

a. Repair harness wire between injector resistor connector B-119 (terminal No. 1) and injector connector B-22 (terminal No. 1) when checking No. 1 cylinder.

b. Repair harness wire between injector resistor connector B-119 (terminal No. 4) and injector connector B-20 (terminal No. 1) when checking No. 2 cylinder.

c. Repair harness wire between injector resistor connector B-119 (terminal No. 5) and injector connector B-18 (terminal No. 1) when checking No. 3 cylinder.

d. Repair harness wire between injector resistor connector B-119 (terminal No. 6) and injector connector B-17 (terminal No. 1) when checking No. 4 cylinder.

Then go to Step 14.

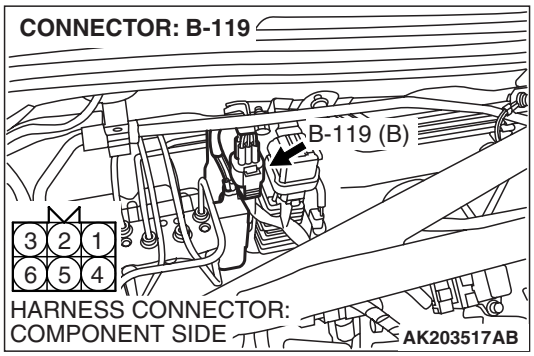

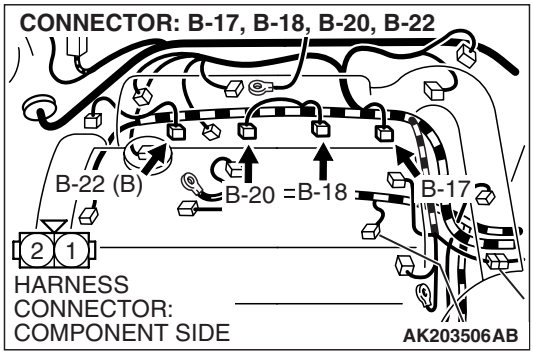

STEP 9. Check for harness damage between injector resistor connector and injector connector.

a. Check the harness wire between injector resistor connector B-119 (terminal No. 1) and injector connector B-22 (terminal No. 1) at No. 1 cylinder.
b. Check the harness wire between injector resistor connector B-119 (terminal No. 4) and injector connector B-20 (terminal No. 1) at No. 2 cylinder.
c. Check the harness wire between injector resistor connector B-119 (terminal No. 5) and injector connector B-18 (terminal No. 1) at No. 3 cylinder.
d. Check the harness wire between injector resistor connector B-119 (terminal No. 6) and injector connector B-17 (terminal No. 1) at No. 4 cylinder.

Q: Is the harness wire in good condition?

YES : Go to Step 10.
NO : Repair it. Then go to Step 14.

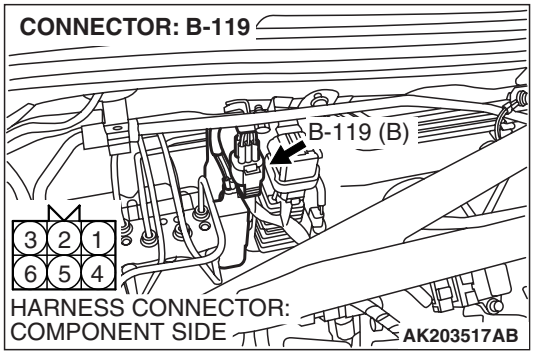

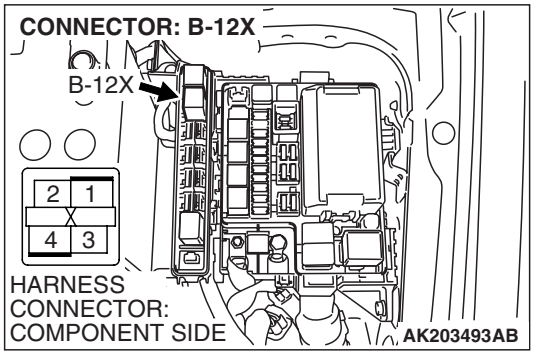

STEP 10. Check for harness damage between MFI relay connector B-12X (terminal No. 4) and injector resistor connector B-119 (terminal No. 3).

NOTE: Check harness after checking intermediate connector C-105. If the intermediate connector is damaged, repair or replace it. Refer to GROUP 00E, Harness Connector Inspection P.00E-2. Then go to Step 14.

Q: Is the harness wire in good condition?

YES : Go to Step 11.
NO : Repair it. Then go to Step 14.

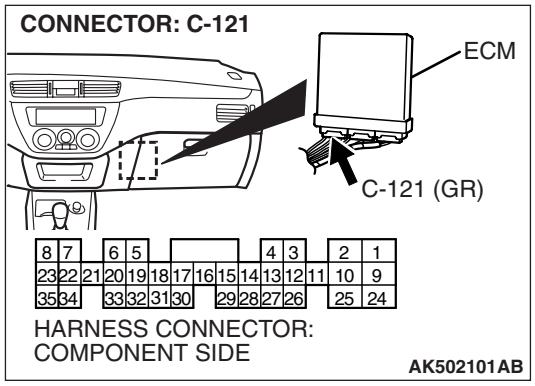

STEP 11. Check harness connector C-121 at ECM for damage.

Q: Is the harness connector in good condition?

YES : Go to Step 12.

NO : Repair or replace it. Refer to GROUP 00E, Harness Connector Inspection P.00E-2. Then go to Step 14.

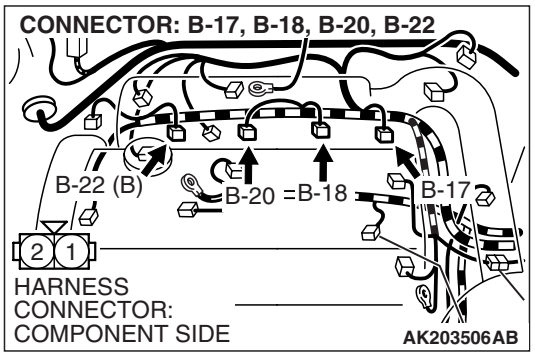

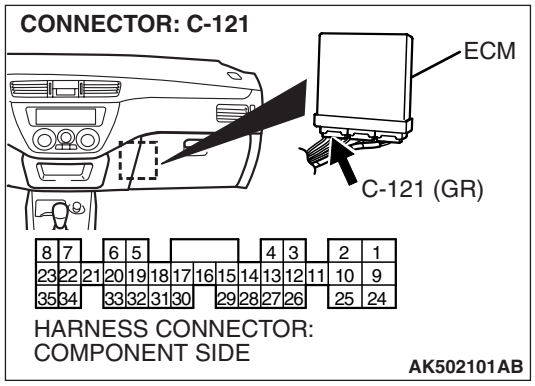

STEP 12. Check for open circuit and short circuit to ground and harness damage between injector connector and ECM connector.

a. Check the harness wire between injector connector B-22 (terminal No. 2) and ECM connector C-121 (terminal No. 1) at No. 1 cylinder.
b. Check the harness wire between injector connector B-20 (terminal No. 2) and ECM connector C-121 (terminal No. 9) at No. 2 cylinder.
c. Check the harness wire between injector connector B-18 (terminal No. 2) and ECM connector C-121 (terminal No. 24) at No. 3 cylinder.
d. Check the harness wire between injector connector B-17 (terminal No. 2) and ECM connector C-121 (terminal No. 2) at No. 4 cylinder.

Q: Is the harness wire in good condition?

YES : Go to Step 13.

NO : Repair it. Then go to Step 14.

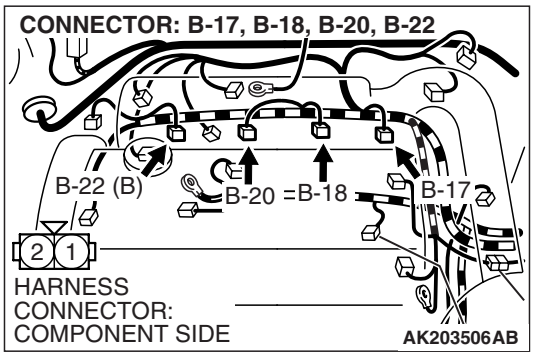

STEP 13. Using the oscilloscope, check the injector.

(1) Disconnect the injector connector B-22 <No. 1 cylinder> or B-20 <No. 2 cylinder> or B-18 <No. 3 cylinder> or B-17 <No. 4 cylinder> and connect the test harness special tool (MB991348) in between. (All terminals should be connected.)

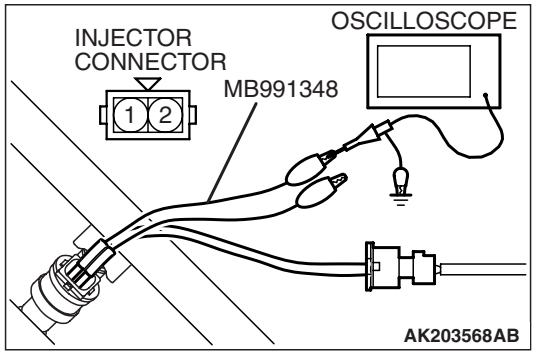

(2) Connect the oscilloscope probe to the injector side connector terminal No. 2.

NOTE: When measuring with the ECM side connector, connect an oscilloscope probe to the each of the following terminals.

- *ECM terminal No. 1 when checking No. 1 cylinder.*
- *ECM terminal No. 9 when checking No. 2 cylinder.*
- *ECM terminal No. 24 when checking No. 3 cylinder.*
- *ECM terminal No. 2 when checking No. 4 cylinder.*

(3) Start the engine and run at idle.

(4) Measure the waveform.
- The waveform should show a normal pattern similar to the illustration.

(5) Turn the ignition switch to the "LOCK" (OFF) position.

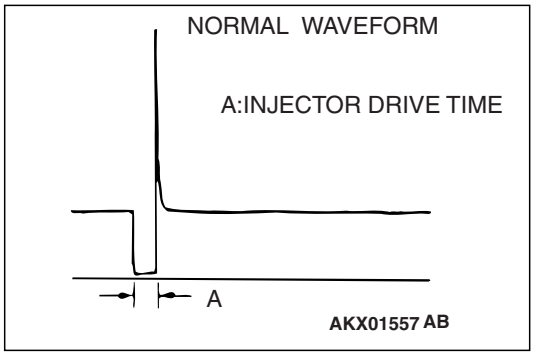

Q: Is the waveform normal?

YES : It can be assumed that this malfunction is intermittent. Refer to GROUP 00, How to Use Troubleshooting/Inspection Service Points –How to Cope with Intermittent Malfunctions P.00-13.

NO : Replace the ECM. Then go to Step 14.

STEP 14. Test the OBD-II drive cycle.

(1) Carry out a test drive with the drive cycle pattern. Refer to GROUP 13A, Diagnostic Function –OBD-II Drive Cycle – Pattern 23 P.13A-12.

(2) Check the diagnostic trouble code (DTC).

Q: Are DTC P0201, P0202, P0203 and P0204 sets?

YES : Retry the troubleshooting.

NO : The inspection is complete.

DTC P0234: Turbocharger Wastegate System Malfunction

TECHNICAL DESCRIPTION

- The ECM checks that the engine is not overcharged by always monitoring intake air volume.
- The ECM protects the engine by shutting off fuel when an overcharged condition is detected.

DESCRIPTIONS OF MONITOR METHODS

- It detects overcharging failure by monitoring intake air volume.

MONITOR EXECUTION

- Continuous

DTC SET CONDITIONS

Logic Flow Chart

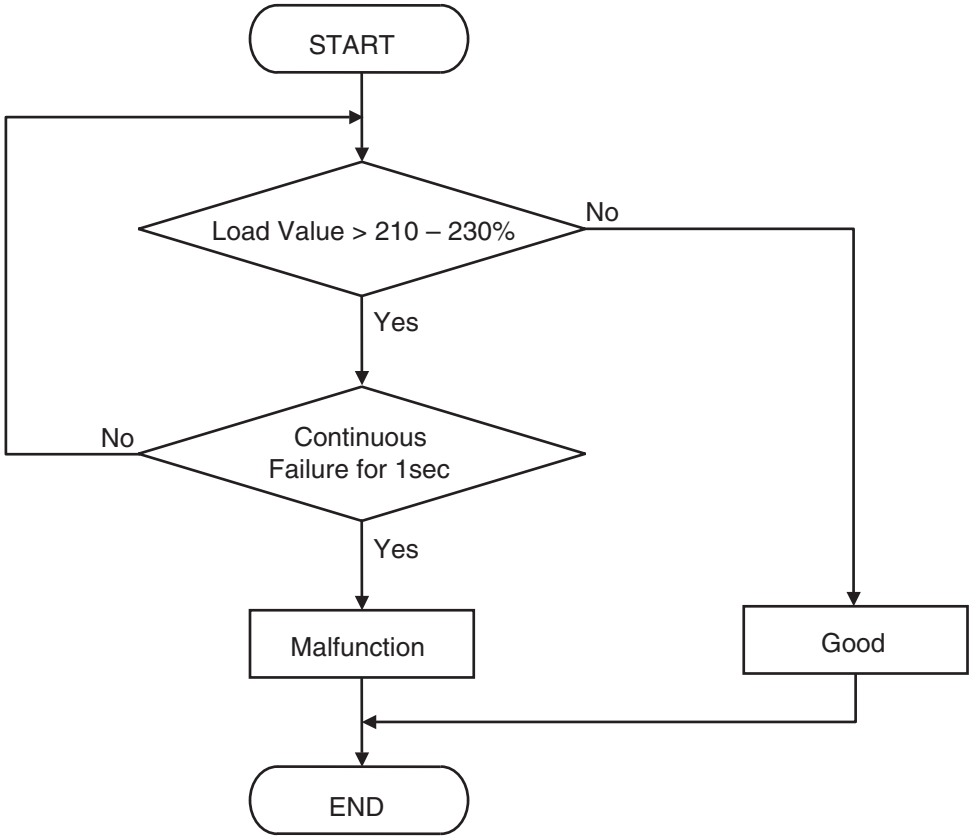

AK204374

Check Condition, Judgement Criterion

- Volumetric efficiency is higher than 210 – 230 percent.

MONITOR EXECUTION CONDITIONS (Other monitor and Sensor)

Other Monitor (There is no temporary DTC stored in memory for the item monitored below)

- Turbocharger wastegate solenoid monitor

Sensor (The sensor below is determined to be normal)

- Volume airflow sensor
- Intake air temperature sensor
- Barometric pressure sensor
- Throttle position sensor

OBD-II DRIVE CYCLE PATTERN

Refer to Diagnostic Function –OBD-II Drive Cycle – Pattern 16.

TSB Revision

TROUBLESHOOTING HINTS (The most likely causes for this code to be set are:)

- Turbocharger wastegate actuator failed.
- Charging pressure control system failed.
- ECM failed.

DIAGNOSIS

Required Special Tools:

- MB991958: Scan Tool (M.U.T.-III Sub Assembly)
  - MB991824: V.C.I.
  - MB991827: USB Cable
  - MB991911: Main Harness B

STEP 1. Check the intake charge pressure.

Refer to GROUP 15, On-vehicle Service –Intake Charge Pressure Check P.15-4.

Q: Are there any abnormalities?

YES : Repair or replace it. Then go to Step 3.
NO : Go to Step 2.

STEP 2. Check the charge pressure control system.

Refer to GROUP 15, On-vehicle Service –Intake Charge Pressure Control System Check P.15-5.

Q: Are there any abnormalities?

YES : .Repair or replace it. Then go to Step 3.
NO : Go to Step 3.

STEP 3. Test the OBD-II drive cycle.

(1) Carry out test drive with the drive cycle pattern. Refer to Diagnostic Function –OBD-II Drive Cycle –Pattern 16 P.13A-12.
(2) Check the diagnostic trouble code (DTC).

Q: Is the DTC P0234 set?

YES : Retry the troubleshooting.
NO : The inspection is complete.

DTC P0243: Turbocharger Wastegate Solenoid Circuit

Turbocharger Westegate Solenoid Circuit

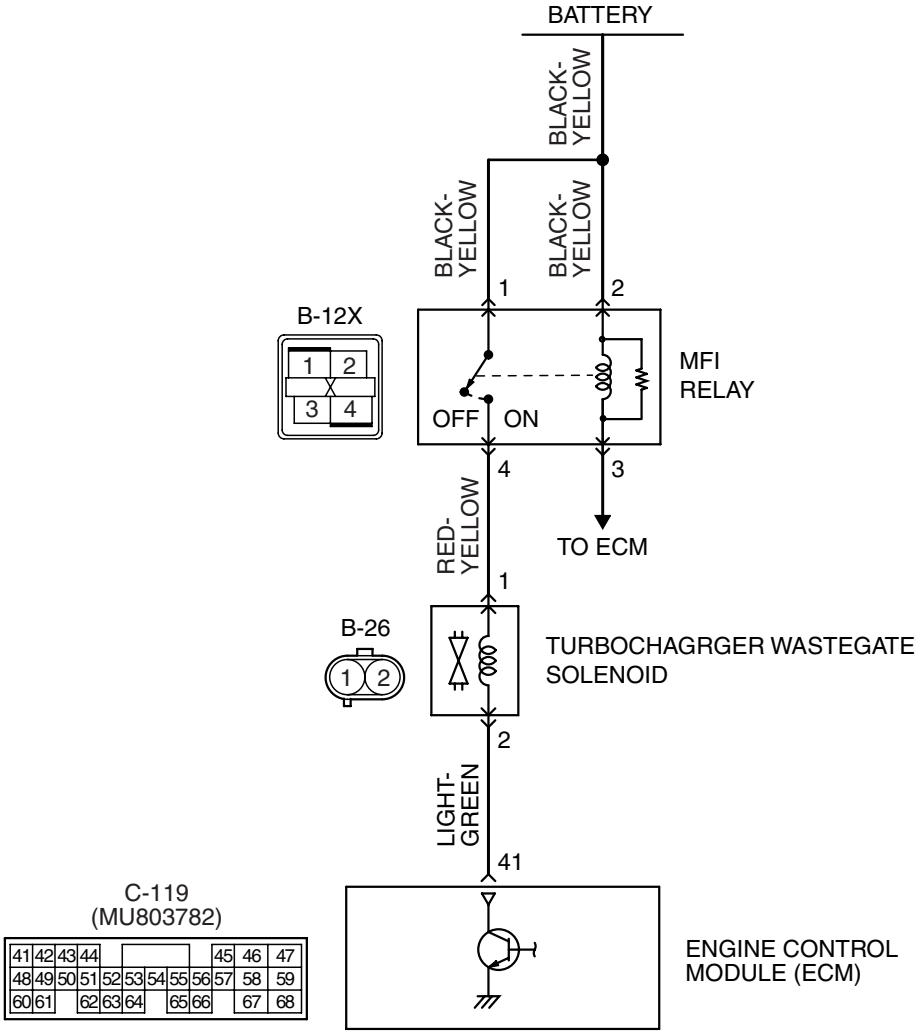

AK502070

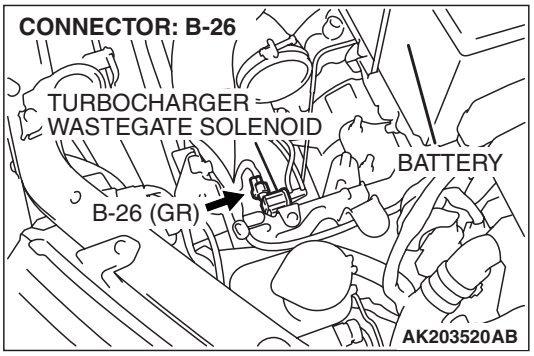

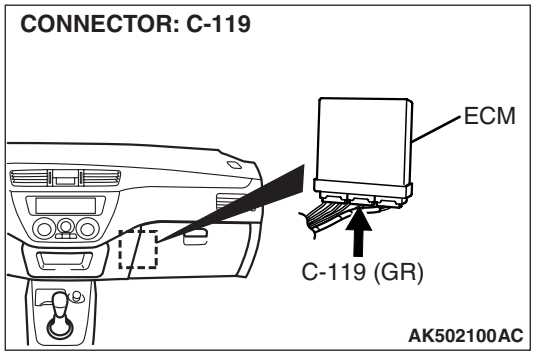

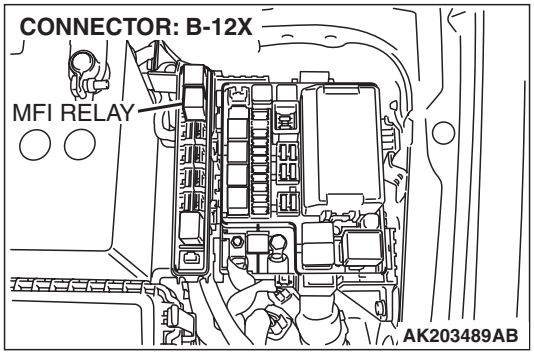

CIRCUIT OPERATION

- The turbocharger wastegate solenoid power is supplied from the MFI relay (terminal No. 4).
- The ECM controls the turbocharger wastegate solenoid ground by turning the power transistor in the ECM "ON" and "OFF".

TECHNICAL DESCRIPTION

- To judge if there is open circuit in the turbocharger wastegate solenoid drive circuit, ECM measures the surge voltage of the turbocharger wastegate solenoid coil.
- The ECM drives the turbocharger wastegate solenoid. After the solenoid is turned off, the ECM will check if the solenoid coil produces a surge voltage of 2 volts or more.

DESCRIPTIONS OF MONITOR METHODS

- If a surge current is not generated in the coil after the turbocharger wastegate solenoid has been actuated, an open circuit is determined to have occurred.

MONITOR EXECUTION

- Continuous

MONITOR EXECUTION CONDITIONS (Other monitor and Sensor)

Other Monitor (There is no temporary DTC stored in memory for the item monitored below)

- Not applicable

Sensor (The sensor below is determined to be normal)

- Not applicable

DTC SET CONDITIONS

Logic Flow Chart

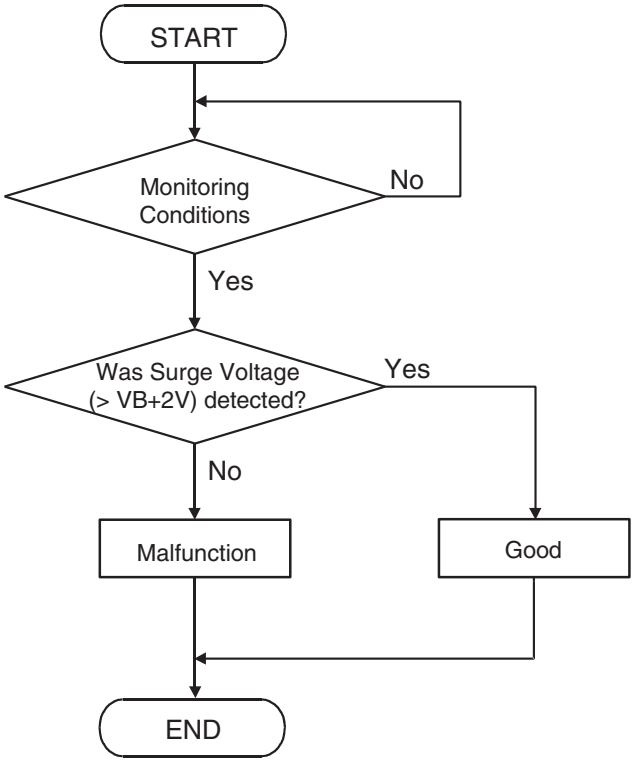

AK305546

Check Conditions

- Engine is being cranked.
- Battery positive voltage is at between 10 and 16 volts.

Judgment Criteria

- The turbocharger wastegate solenoid coil surge voltage (battery positive voltage +2 volts) is not detected for 0.2 second.
- Only one monitor during one drive cycle.

Check Conditions

- Battery positive voltage is at between 10 and 16 volts.
- ON duty cycle of the turbocharger wastegate solenoid is between 10 at 90 percent.
- Fuel pressure solenoid is OFF.
- More than 1 second has elapsed after the above mentioned conditions have been met.

Judgment Criterion

- The turbocharger wastegate solenoid coil surge voltage (battery positive voltage +2 volts) is not detected for 1 second.

OBD-II DRIVE CYCLE PATTERN

Refer to Diagnostic Function –OBD-II Drive Cycle – Pattern 23 P.13A-12.

TROUBLESHOOTING HINTS (The most likely causes for this code to be set are:)

- Turbocharger wastegate solenoid failed.
- Open or shorted turbocharger wastegate solenoid circuit, or connector damage.
- ECM failed.

DIAGNOSIS

Required Special Tools:

- MB991958: Scan Tool (M.U.T.-III Sub Assembly)
  - MB991824: V.C.I.
  - MB991827: USB Cable
  - MB991911: Main Harness B

STEP 1. Using scan tool MB991958, check actuator test item 10: turbocharger wastegate solenoid.

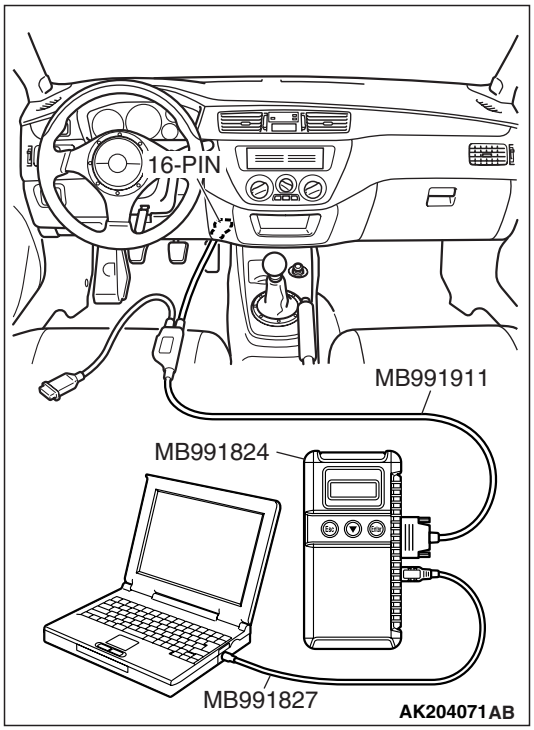

⚠ CAUTION

To prevent damage to scan tool MB991958, always turn the ignition switch to the "LOCK" (OFF) position before connecting or disconnecting scan tool MB991958.

(1) Connect scan tool MB991958 to the data link connector.
(2) Turn the ignition switch to the "ON" position.
(3) Set scan tool MB991958 to the actuator test mode for item 12, turbocharger wastegate solenoid.
  - An operation sound should be heard and vibration should be felt when the turbocharger wastegate solenoid is operated.

(4) Turn the ignition switch to the "LOCK" (OFF) position.

Q: Is the solenoid operating properly?

YES : It can be assumed that this malfunction is intermittent. Refer to GROUP 00, How to Use Troubleshooting/Inspection Service Points –How to Cope with Intermittent Malfunctions P.00-13.

NO : Go to Step 2.

STEP 2. Check harness connector B-26 at the turbocharger wastegate solenoid for damage.

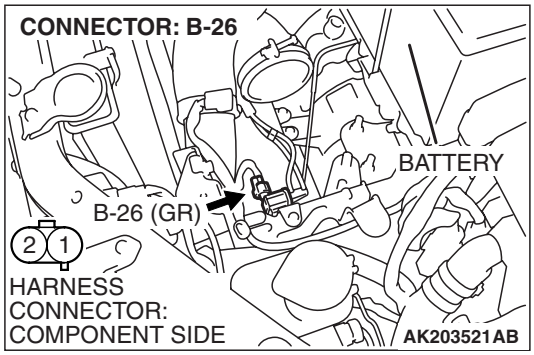

Q: Is the harness connector in good condition?

YES : Go to Step 3.

NO : Repair or replace it. Refer to GROUP 00E, Harness Connector Inspection P.00E-2. Then go to Step 12.

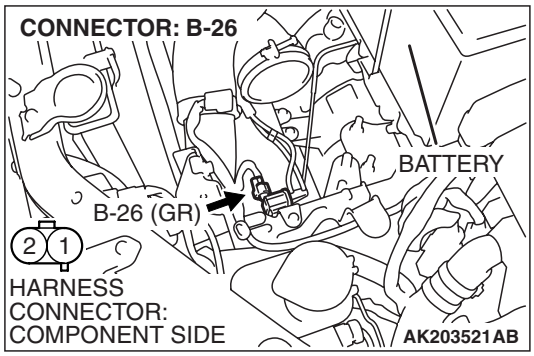

STEP 3 Check the turbocharger wastegate solenoid.

(1) Disconnect the turbocharger wastegate solenoid connector B-26.

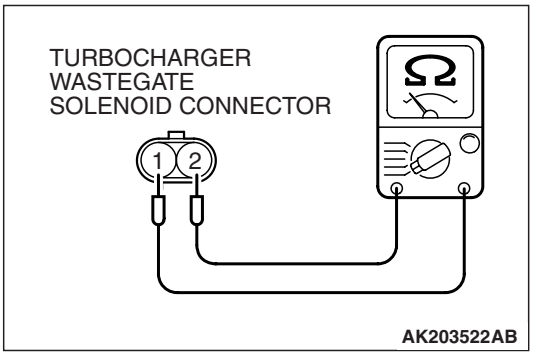

(2) Measure the resistance between turbocharger wastegate solenoid side connector terminal No. 1 and No. 2.

Standard value: 29 – 35 ohms [at 20° C (68° F)]

Q: Is the measured resistance between 29 and 35 ohms [at 20° C (68° F)]?

YES : Go to Step 4.

NO : Replace the turbocharger wastegate solenoid. Then go to Step 12.

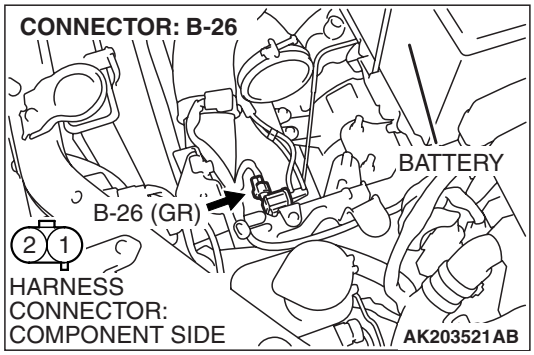

STEP 4. Measure the power supply voltage at turbocharger wastegate solenoid harness side connector B-26.

(1) Disconnect connector B-26 and measure at the harness side.

(2) Turn the ignition switch to the "ON" position.

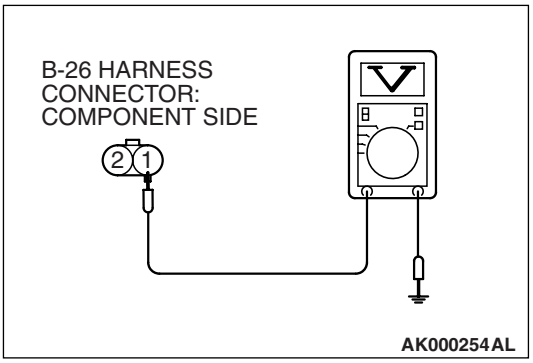

(3) Measure the voltage between terminal No. 1 and ground.
- Voltage should be battery positive voltage.

(4) Turn the ignition switch to the "LOCK" (OFF) position.

Q: Is battery positive voltage (approximately 12 volts) present?

YES : Go to Step 6.

NO : Go to Step 5.

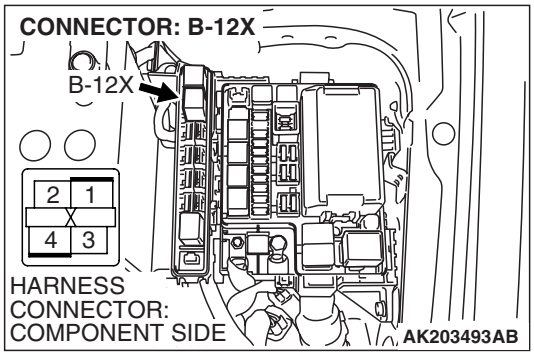

STEP 5. Check harness connector B-12X at MFI relay for damage.

Q: Is the harness connector in good condition?

YES : Repair harness wire between MFI relay connector B-12X (terminal No. 4) and turbocharger wastegate solenoid connector B-26 (terminal No. 1) because of open circuit or short circuit to ground. Then go to Step 12.

NO : Repair or replace it. Refer to GROUP 00E, Harness Connector Inspection P.00E-2. Then go to Step 12.

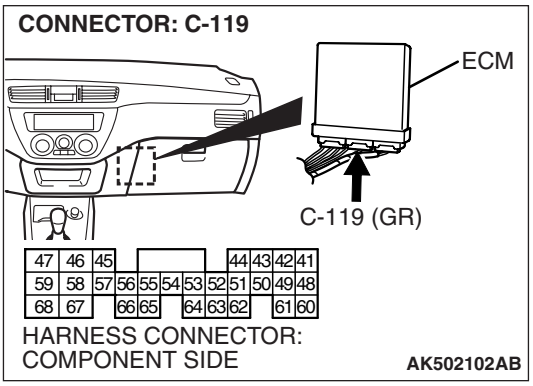

STEP 6. Measure the power supply voltage at ECM connector C-119 by backprobing.

(1) Do not disconnect connector C-119.

(2) Turn the ignition switch to the "ON" position.

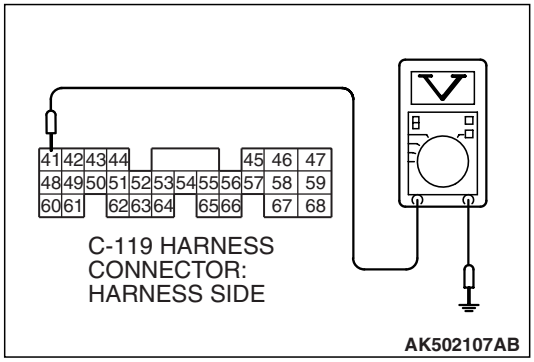

(3) Measure the voltage between terminal No. 41 and ground by backprobing.
- Voltage should be battery positive voltage.

(4) Turn the ignition switch to the "LOCK" (OFF) position.

Q: Is battery positive voltage (approximately 12 volts) present?

YES : Go to Step 9.

NO : Go to Step 7.

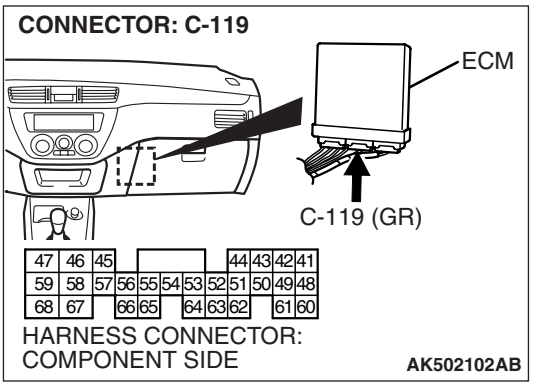

STEP 7. Check harness connector C-119 at ECM for damage.

Q: Is the harness connector in good condition?

YES : Go to Step 8.

NO : Repair or replace it. Refer to GROUP 00E, Harness Connector Inspection P.00E-2. Then go to Step 12.

STEP 8. Check for open circuit and short circuit to ground between turbocharger wastegate solenoid connector B-26 (terminal No. 2) and ECM connector C-119 (terminal No. 41).

Q: Is the harness wire in good condition?

YES : Replace the ECM. Then go to Step 12.

NO : Repair it. Then go to Step 12.

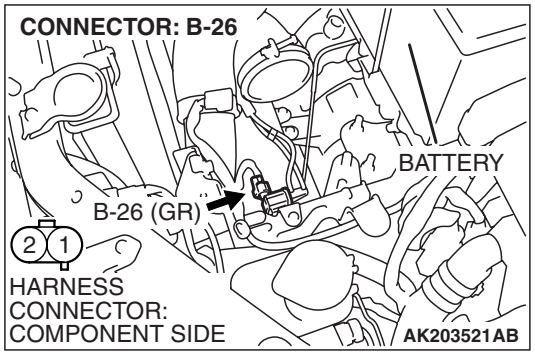

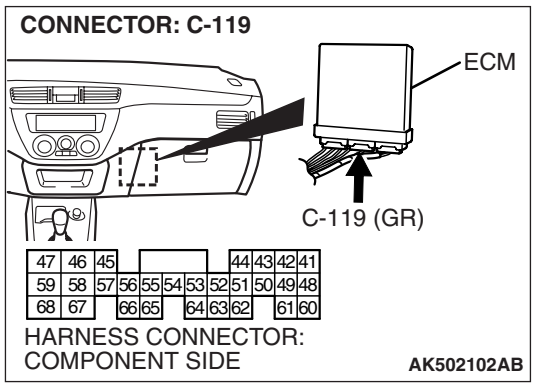

STEP 9. Check harness connector C-119 at ECM for damage.

Q: Is the harness connector in good condition?

YES : Go to Step 10.

NO : Repair or replace it. Refer to GROUP 00E, Harness Connector Inspection P.00E-2. Then go to Step 12.

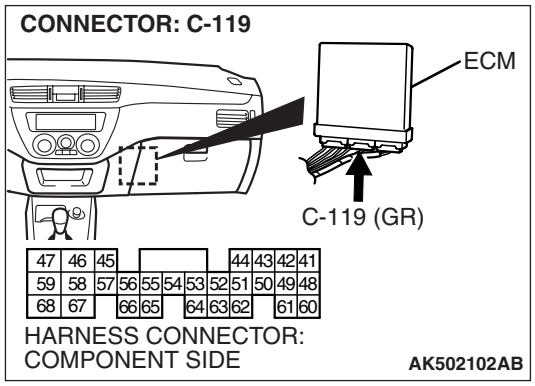

STEP 10. Check for harness damage between MFI relay connector B-12X (terminal No. 4) and turbocharger wastegate solenoid connector B-26 (terminal No. 1).

Q: Is the harness wire in good condition?

YES : Go to Step 11.

NO : Repair it. Then go to Step 12.

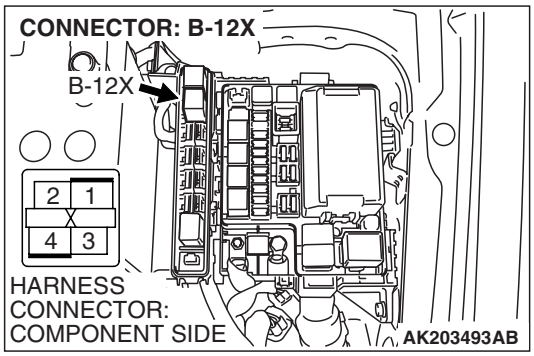

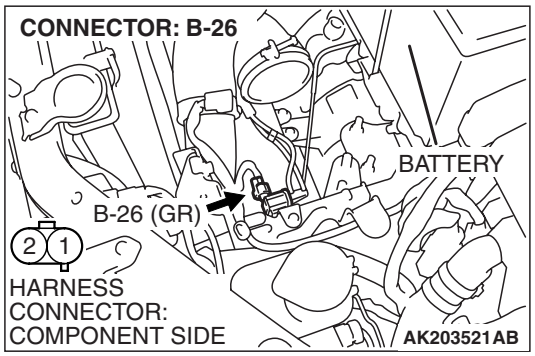

STEP 11. Check for harness damage between turbocharger wastegate solenoid connector B-26 (terminal No. 2) and ECM connector C-119 (terminal No. 41).

Q: Is the harness wire in good condition?

YES : Replace the ECM. Then go to Step 12.

NO : Repair it. Then go to Step 12.

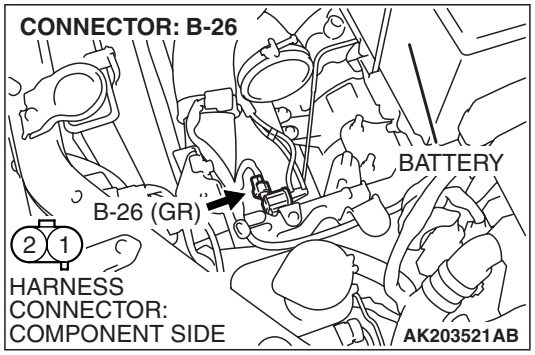

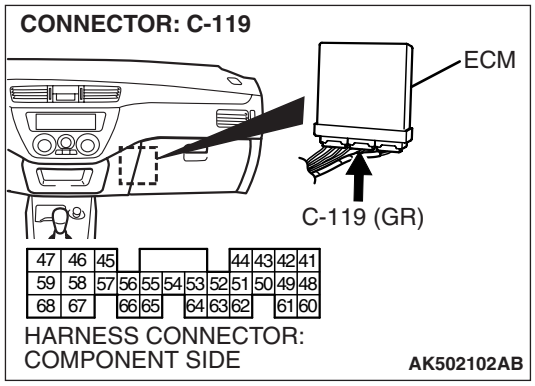

STEP 12. Test the OBD-II drive cycle.

(1) Carry out a test drive with the drive cycle pattern. Refer to GROUP 13A, Diagnostic Function –OBD-II Drive Cycle – Pattern 23 P.13A-12.

(2) Check the diagnostic trouble code (DTC).

Q: Is DTC P0243 set?

YES : Retry the troubleshooting.
NO : The inspection is complete.

DTC P0300: Random/Multiple Cylinder Misfire Detected

Random Misfire Circuit

- Refer to, DTC P0201 – P0204 Injector Circuit Malfunction P.13A-323.

CIRCUIT OPERATION

- Refer to, DTC P0201 – P0204 Injector Circuit Malfunction P.13A-323.

TECHNICAL DESCRIPTION

- If a misfire occurs while the engine is running, the engine speed changes for an instant.
- The ECM checks for such changes in engine speed.

DESCRIPTIONS OF MONITOR METHODS

- Monitor angular acceleration of crankshaft and detect malfunction when negative variation of the angular acceleration is large.

MONITOR EXECUTION

- Continuous

MONITOR EXECUTION CONDITIONS (Other monitor and Sensor)

Other Monitor (There is no temporary DTC stored in memory for the item monitored below)

- Not applicable

Sensor (The sensor below is determined to be normal)

- Camshaft position sensor
- Volume airflow sensor
- Engine coolant temperature sensor
- Intake air temperature sensor
- Barometric pressure sensor
- Throttle position sensor

DTC SET CONDITIONS

Logic Flow Chart

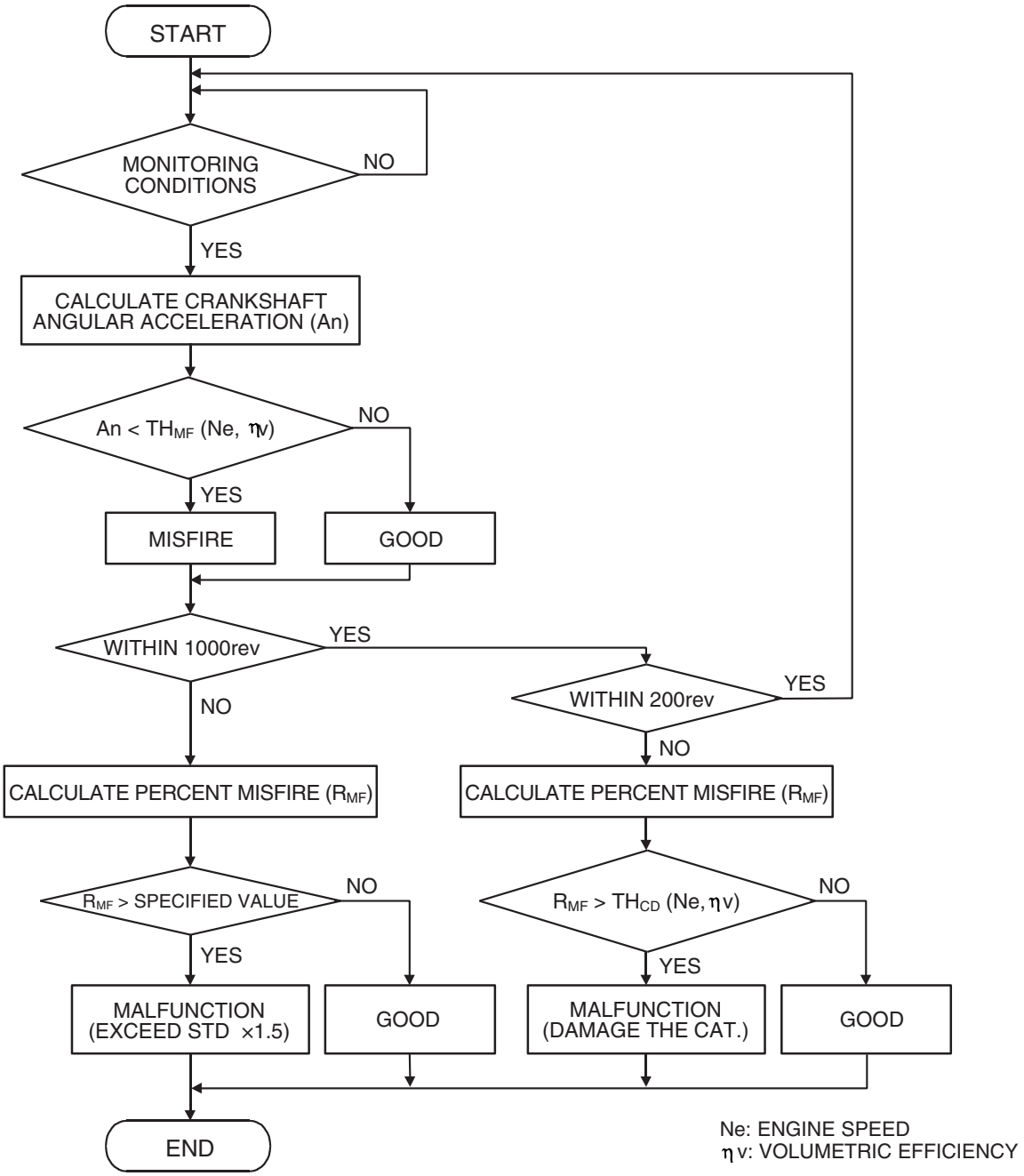

Check Conditions

- Engine speed is between 500 and 7,000 r/min.
- Engine coolant temperature is higher than –10° C (14° F).
- Intake air temperature is higher than – 40° C (–40° F).
- Barometric pressure is higher than 76 kPa (22.4 in.Hg).
- Volumetric efficiency is at between 15 and 160 percent.
- Adaptive learning is complete for the vane which generates a crankshaft position signal.

TSB Revision

- While the engine is running, excluding gear shifting, deceleration, sudden acceleration/deceleration and A/C compressor switching.
- The throttle deviation is –0.59 volt/10 ms to + 0.59 volt/10 ms.

Judgement Criteria (change in the angular acceleration of the crankshaft is used for misfire detection).

- Misfire has occurred more frequently than allowed during the last 200 revolutions [when the catalyst temperature is higher than 950° C (1742° F)].

or

- Misfire has occurred in 22 or more of the last 1,000 revolutions (corresponding to 1.5 times the limit of emission standard).

OBD-II DRIVE CYCLE PATTERN

Refer to Diagnostic Function –OBD-II Drive Cycle – Pattern 14 P.13A-12.

TROUBLESHOOTING HINTS (The most likely causes for this code to be set are:)

- Ignition system related part(s) failed.
- Poor crankshaft position sensor.
- Incorrect air/fuel ratio.
- Low compression pressure.
- Skipping of timing belt teeth.
- EGR system and EGR valve failed.
- ECM failed.

DIAGNOSIS

Required Special Tools:

- MB991958: Scan Tool (M.U.T.-III Sub Assembly)
  - MB991824: V.C.I.
  - MB991827: USB Cable
  - MB991911: Main Harness B

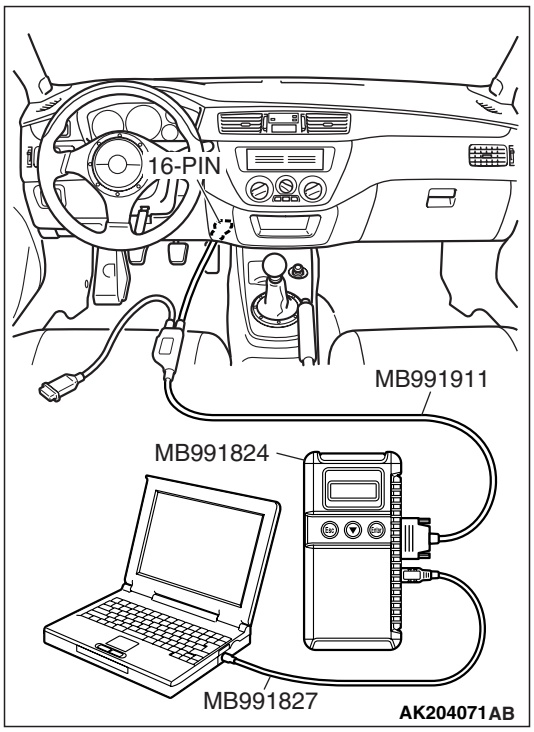

STEP 1. Using scan tool MB991958, check data list item 22: Crankshaft Position Sensor.

⚠ CAUTION

To prevent damage to scan tool MB991958, always turn the ignition switch to the "LOCK" (OFF) position before connecting or disconnecting scan tool MB991958.

(1) Connect scan tool MB991958 to the data link connector.
(2) Start the engine and run at idle.
(3) Set scan tool MB991958 to the data reading mode for item 22, Crankshaft Position Sensor.
(4) Check the waveform of the crankshaft position sensor while keeping the engine speed constant.
  - The pulse width should be constant.
(5) Turn the ignition switch to the "LOCK" (OFF) position.

Q: Is the sensor operating properly?

YES : Go to Step 2.
NO : Refer to, DTC P0335 –Crankshaft Position Sensor Circuit Malfunction P.13A-361.

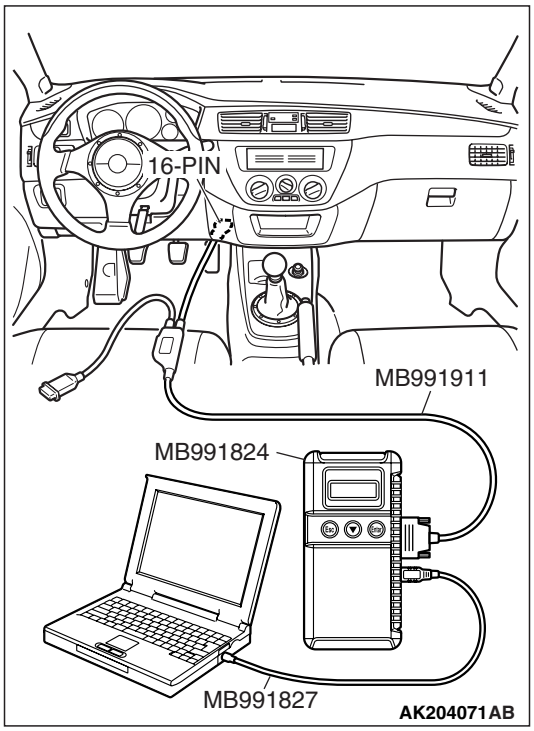

STEP 2. Using scan tool MB991958, check data list item 81: Long-Term Fuel Trim (trim).

(1) Start the engine and run at idle.

(2) Set scan tool MB991958 to the data reading mode for item 81, Long-Term Fuel Trim (trim).

- The fuel trim should be between –12.5 and + 12.5 when the load is 2,500 r/min (during closed loop) after the engine is warmed.

(3) Turn the ignition switch to the "LOCK" (OFF) position.

Q: Is the specification normal?

YES : Go to Step 3.

NO : Refer to, DTC P0171 –System too Lean P.13A-285, DTC P0172 –System too Rich P.13A-293.

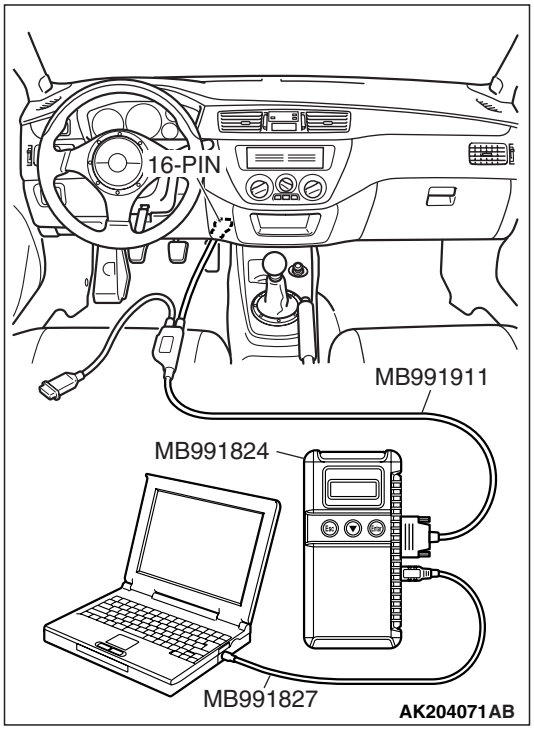

STEP 3. Using scan tool MB991958, check data list item 82: Short-Term Fuel Trim (trim).

(1) Start the engine and run at idle.

(2) Set scan tool MB991958 to the data reading mode for item 82, Short-Term Fuel Trim (trim).

- The fuel trim should be between –20 and + 20 when the load is 2,500 r/min (during closed loop) after the engine is warmed.

(3) Turn the ignition switch to the "LOCK" (OFF) position.

Q: Is the specification normal?

YES : Go to Step 4.

NO : Refer to, DTC P0171 –System too Lean P.13A-285, DTC P0172 –System too Rich P.13A-293.

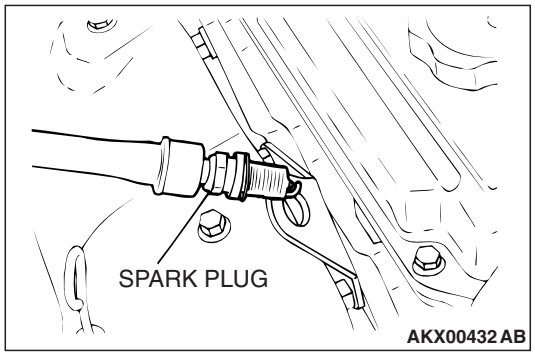

STEP 4. Check the ignition coil spark.

(1) Check each ignition coil spark.
(2) Remove the intake manifold.
(3) Remove the spark plug and connect to the spark plug cable.
(4) Ground the spark plug side electrode securely.
- When the engine is cranked, the spark plug should spark.

Q: Did it spark?

YES : Go to Step 7.
NO : Go to Step 5.

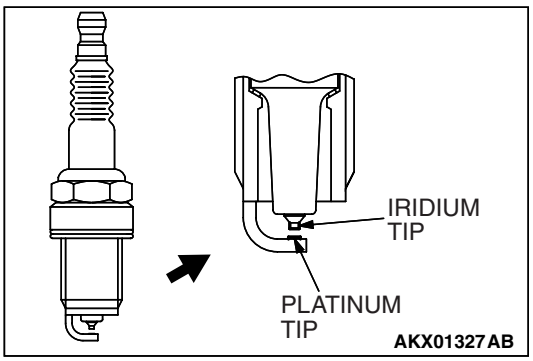

STEP 5. Check the spark plugs.

⚠ CAUTION

Do not attempt to adjust the gap of the iridium plug. Cleaning of the iridium plug may result in damage to the iridium and platinum tips. Therefore, if carbon deposits must be removed, use a plug cleaner and complete cleaning within 20 seconds to protect the electrode. Do not use a wire brush.

(1) Check the plug gap and replace if the limit is exceeded.

Standard value: 0.6 – 0.7 mm (0.024 – 0.028 inch)
Limit: 0.85 mm (0.030 inch)

Q: Is the plug gap at the standard value?

YES : Go to Step 6.
NO : Replace the faulty spark plug. Then go to Step 13.

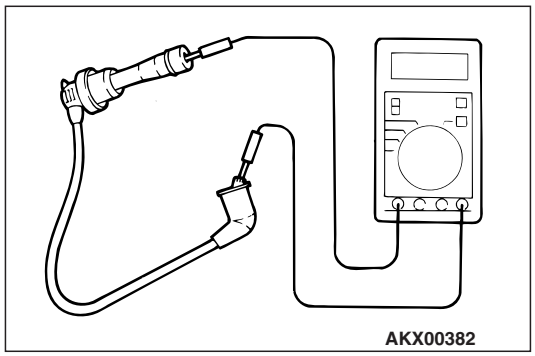

STEP 6. Check the spark plug cable.

(1) Check the cap and coating for cracks.
(2) Measure the resistance.

Limit: maximum 19 kΩ

Q: Is the measured resistance less than 19 kΩ?

YES : Refer to GROUP 13A, INSPECTION PROCEDURE 33 –Ignition Circuit System P.13A-813.
NO : Replace the faulty spark plug cable. Then go to Step 13.

STEP 7. Check the injector.

(1) Disconnect the injector connector.

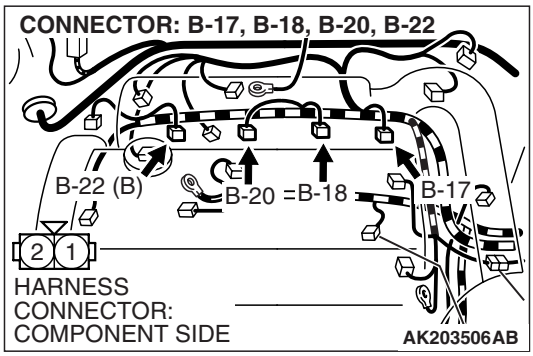

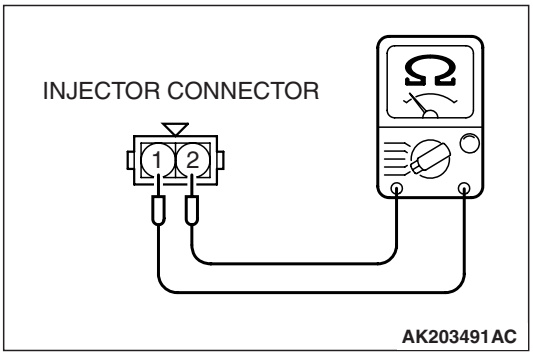

(2) Measure the resistance between each injector side connector terminal No. 1 and No. 2.

Standard value: 2 – 3 ohms [at 20° C (68° F)]

Q: Is the measured resistance between 2 and 3 ohms [at 20° C (68° F)]?

YES : Go to Step 8.

NO : Replace the faulty injector. Then go to Step 13.

STEP 8. Check harness connectors B-17, B-18, B-20, B-22 at injector for damage.

Q: Is the harness connector in good condition?

YES : Go to Step 9.

NO : Repair or replace the faulty injector connector. Refer to GROUP 00E, Harness Connector Inspection P.00E-2. Then go to Step 13.

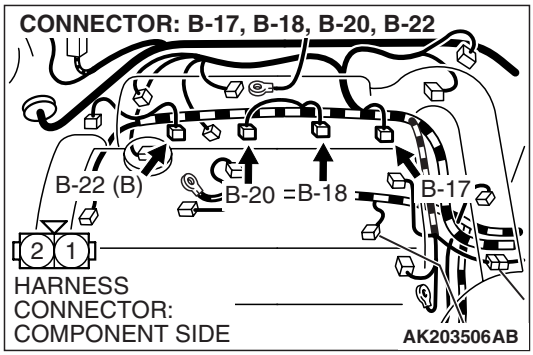

STEP 9. Check harness connector C-121 at ECM for damage.

Q: Is the harness connector in good condition?

YES : Go to Step 10.

NO : Repair or replace it. Refer to GROUP 00E, Harness Connector Inspection P.00E-2. Then go to Step 13.

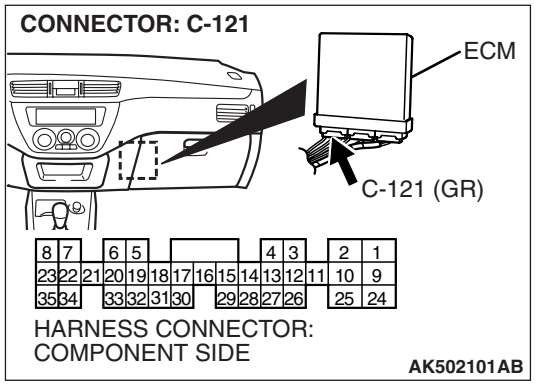

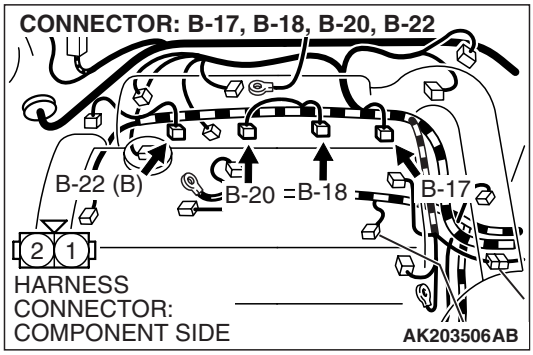

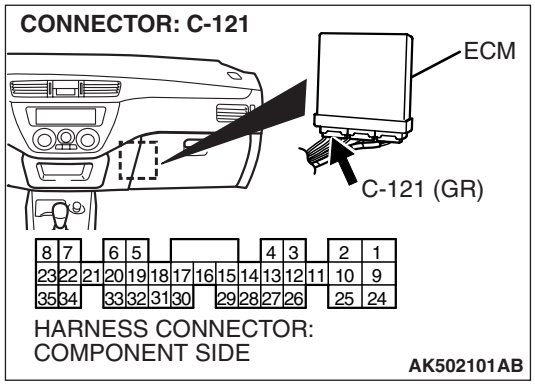

STEP 10. Check for harness damage between injector connector and ECM connector.

a. Check the harness wire between injector connector B-22 (terminal No. 2) and ECM connector C-121 (terminal No. 1) at No. 1 cylinder.
b. Check the harness wire between injector connector B-20 (terminal No. 2) and ECM connector C-121 (terminal No. 9) at No. 2 cylinder.
c. Check the harness wire between injector connector B-18 (terminal No. 2) and ECM connector C-121 (terminal No. 24) at No. 3 cylinder.
d. Check the harness wire between injector connector B-17 (terminal No. 2) and ECM connector C-121 (terminal No. 2) at No. 4 cylinder.

Q: Is the harness wire in good condition?

YES : Go to Step 11.
NO : Repair it. Then go to Step 13.

STEP 11. Check the following items.

(1) Check the following items, and repair or replace the defective component.
   a. Check for skipped timing belt teeth.
   b. Check compression.
   c. EGR valve failed.

Q: Are there any abnormalities?

YES : Repair or replace it. Then go to Step 13.
NO : Go to Step 12.

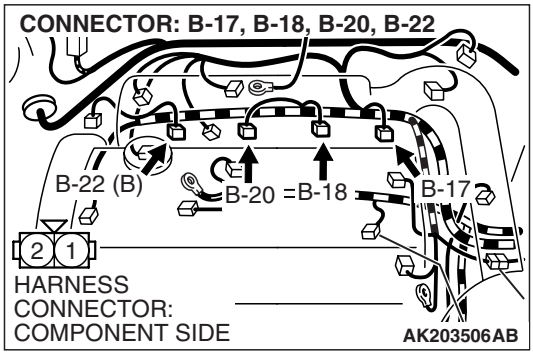

STEP 12. Replace the injector.

(1) Replace the injector.
(2) Carry out a test drive with the drive cycle pattern. Refer to GROUP 13A, Diagnostic Function –OBD-II Drive Cycle – Pattern 14 P.13A-12.
(3) Check the diagnostic trouble code (DTC).

Q: Is DTC P0300 set?

YES : Replace the ECM. Then go to Step 13.
NO : The inspection is complete.

STEP 13. Test the OBD-II drive cycle.

(1) Carry out a test drive with the drive cycle pattern. Refer to GROUP 13A, Diagnostic Function –OBD-II Drive Cycle – Pattern 14 P.13A-12.

(2) Check the diagnostic trouble code (DTC).

Q: Is DTC P0300 set?

YES : Retry the troubleshooting.
NO : The inspection is complete.

DTC P0301: Cylinder 1 Misfire Detected, DTC P0302: Cylinder 2 Misfire Detected, DTC P0303: Cylinder 3 Misfire Detected, DTC P0304: Cylinder 4 Misfire Detected

Misfire Detected Circuit

- Refer to, DTC P0201 –P0204 Injector Circuit Malfunction P.13A-323.

CIRCUIT OPERATION

- Refer to, DTC P0201 –P0204 Injector Circuit Malfunction P.13A-323.

TECHNICAL DESCRIPTION

- If a misfire occurs while the engine is running, the engine speed changes for an instant.
- The ECM checks for such changes in engine speed.

DESCRIPTIONS OF MONITOR METHODS

- Monitor angular acceleration of crankshaft and detect malfunction when negative variation of the angular acceleration is large.

MONITOR EXECUTION

- Continuous

MONITOR EXECUTION CONDITIONS (Other monitor and Sensor)

Other Monitor (There is no temporary DTC stored in memory for the item monitored below)

- Not applicable

Sensor (The sensor below is determined to be normal)

- Camshaft position sensor
- Volume airflow sensor
- Engine coolant temperature sensor
- Intake air temperature sensor
- Barometric pressure sensor
- Throttle position sensor

DTC SET CONDITIONS

Logic Flow Chart

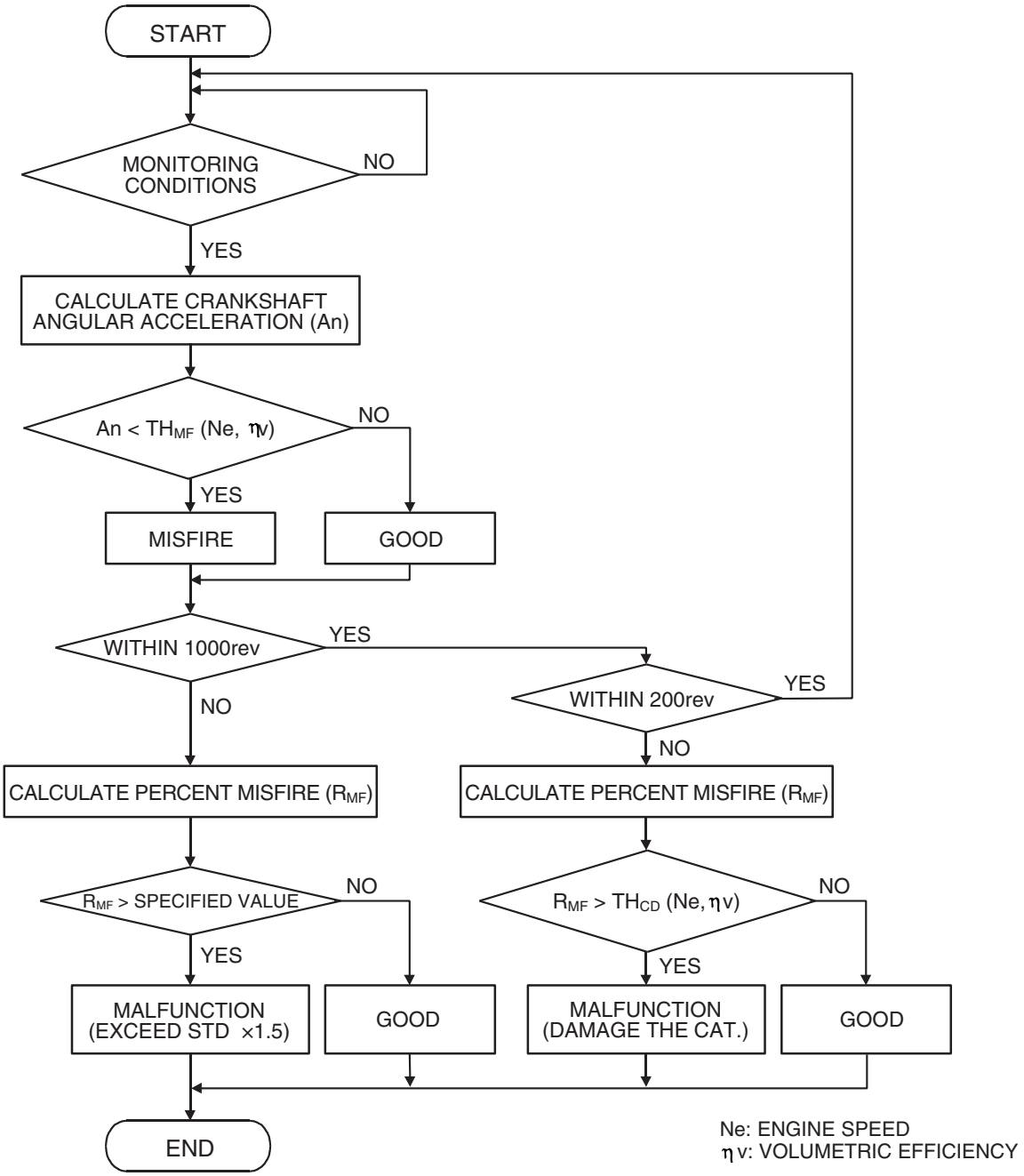

Check Conditions

- Engine speed is between 500 and 7,000 r/min.
- Engine coolant temperature is higher than –10° C (14° F).
- Intake air temperature is higher than – 40° C (–40° F).
- Barometric pressure is higher than 76 kPa (22.4 in.Hg).
- Volumetric efficiency is at between 15 and 160 percent.
- Adaptive learning is complete for the vane which generates a crankshaft position signal.

TSB Revision

- While the engine is running, excluding gear shifting, deceleration, sudden acceleration/deceleration and A/C compressor switching.
- The throttle deviation is –0.59 volt/10ms to + 0.59 volt/10ms.

Judgement Criteria (change in the angular acceleration of the crankshaft is used for misfire detection).

- Misfire has occurred more frequently than allowed during the last 200 revolutions [when the catalyst temperature is higher than 950° C (1,742° F)].

or

- Misfire has occurred in 22 or more of the last 1,000 revolutions (corresponding to 1.5 times the limit of emission standard).

OBD-II DRIVE CYCLE PATTERN

Refer to Diagnostic Function –OBD-II Drive Cycle – Pattern 14 P.13A-12.

TROUBLESHOOTING HINTS (The most likely causes for this code to be set are:)

- Ignition system related part(s) failed.
- Low compression pressure.
- Injector failed.
- ECM failed.

DIAGNOSIS

STEP 1. Check the spark plugs.

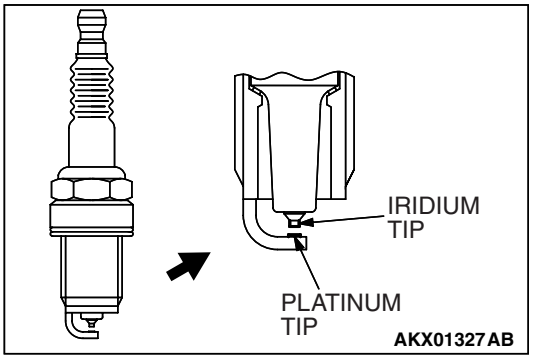

⚠ CAUTION

Do not attempt to adjust the gap of the iridium plug. Cleaning of the iridium plug may result in damage to the iridium and platinum tips. Therefore, if carbon deposits must be removed, use a plug cleaner and complete cleaning within 20 seconds to protect the electrode. Do not use a wire brush.

(1) For the right bank cylinder, remove the intake manifold.
(2) Check the plug gap and replace if the limit is exceeded.

Standard value: 0.6 – 0.7 mm (0.024 – 0.028 inch)
Limit: 0.85 mm (0.030 inch)

Q: Is the plug gap at the standard value?

YES : Go to Step 2.
NO : Replace the spark plug. Then go to Step 9.

STEP 2. Check the spark plug cable.

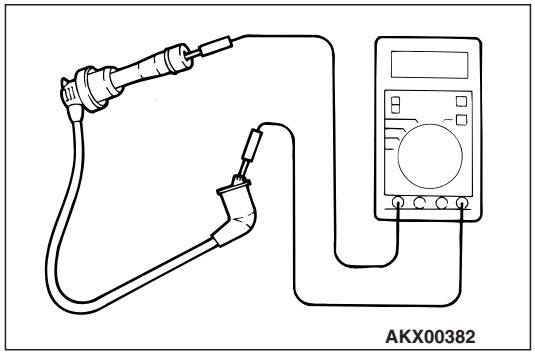

(1) Check the cap and coating for cracks.
(2) Measure the resistance.

Limit: maximum 19 kΩ

Q: Is the measured resistance less than 19 kΩ?

YES : Go to Step 3.
NO : Replace the spark plug cable. Then go to Step 9.

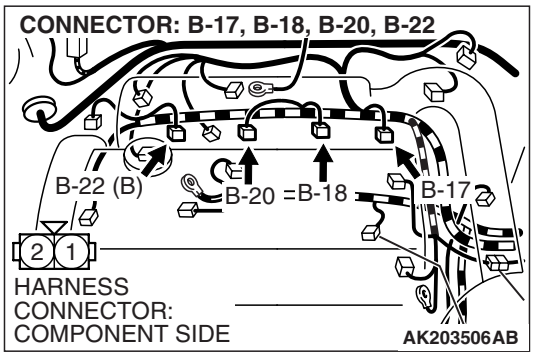

STEP 3. Check the injector.

(1) Disconnect the injector connector B-22 <No. 1 cylinder>, B-20 <No. 2 cylinder>, B-18 <No. 3 cylinder>, B-17 <No. 4 cylinder>.

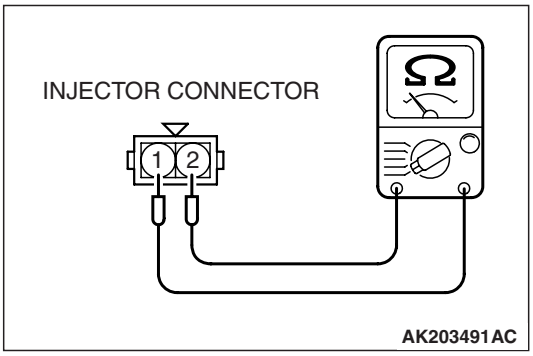

(2) Measure the resistance between injector side connector terminal No. 1 and No. 2.

Standard value: 2 – 3 ohms [at 20° C (68° F)]

Q: Is the measured resistance between 2 and 3 ohms [at 20° C (68° F)]?

YES : Go to Step 4.

NO : Replace the injector. Then go to Step 9.

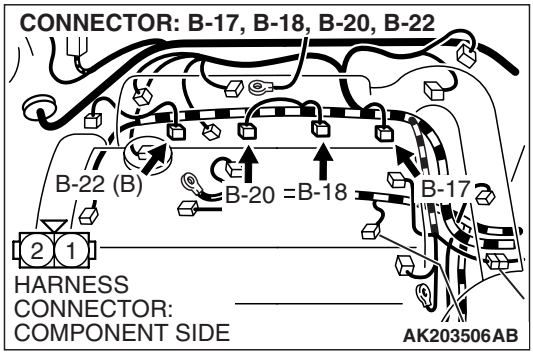

STEP 4. Check harness connector at injector for damage.

a. Check harness connector B-22 at No. 1 cylinder.
b. Check harness connector B-20 at No. 2 cylinder.
c. Check harness connector B-18 at No. 3 cylinder.
d. Check harness connector B-17 at No. 4 cylinder.

Q: Is the harness connector in good condition?

YES : Go to Step 5.

NO : Repair or replace the injector. Refer to GROUP 00E, Harness Connector Inspection P.00E-2. Then go to Step 9.

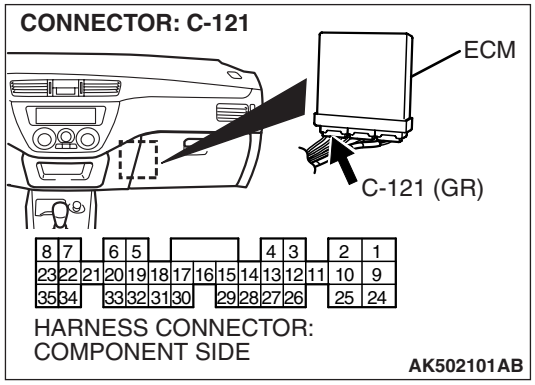

STEP 5. Check harness connector C-121 at ECM for damage.

Q: Is the harness connector in good condition?

YES : Go to Step 6.

NO : Repair or replace it. Refer to GROUP 00E, Harness Connector Inspection P.00E-2. Then go to Step 9

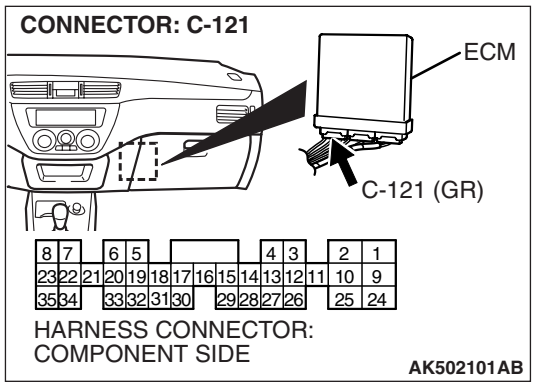

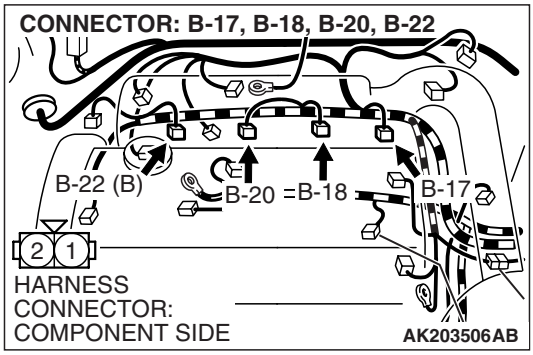

STEP 6. Check for harness damage between injector connector and ECM connector.

a. Check the harness wire between injector connector B-22 (terminal No. 2) and ECM connector C-121 (terminal No. 1) at No. 1 cylinder.
b. Check the harness wire between injector connector B-20 (terminal No. 2) and ECM connector C-121 (terminal No. 9) at No. 2 cylinder.
c. Check the harness wire between injector connector B-18 (terminal No. 2) and ECM connector C-121 (terminal No. 24) at No. 3 cylinder.
d. Check the harness wire between injector connector B-17 (terminal No. 2) and ECM connector C-121 (terminal No. 2) at No. 4 cylinder.

Q: Is the harness wire in good condition?

YES : Go to Step 7.
NO : Repair it. Then go to Step 9.

STEP 7. Check the compression.

Refer to GROUP 11A, On-Vehicle Service –Compression Pressure Check P.11A-10.

Q: Are there any abnormalities?

YES : Repair or replace it. Then go to Step 9.
NO : Go to Step 8.

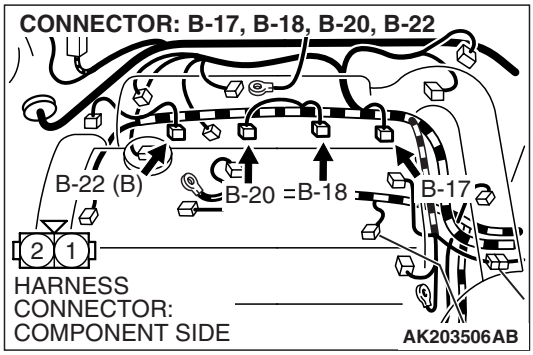

STEP 8. Replace the injector.

(1) Replace the injector.
(2) Carry out a test drive with the drive cycle pattern. Refer to GROUP 13A, Diagnostic Function –OBD-II Drive Cycle – Pattern 14 P.13A-12.
(3) Check the diagnostic trouble code (DTC).

Q: Are DTC P0301, P0302, P0303 and P0304 sets?

YES : Replace the ECM. Then go to Step 9.
NO : The inspection is complete.

STEP 9. Test the OBD-II drive cycle.

(1) Carry out a test drive with the drive cycle pattern. Refer to GROUP 13A, Diagnostic Function –OBD-II Drive Cycle – Pattern 14 P.13A-12.

(2) Check the diagnostic trouble code (DTC).

Q: Are DTC P0301, P0302, P0303 and P0304 sets?

YES : Retry the troubleshooting.

NO : The inspection is complete.

DTC P0325: Knock Sensor Circuit

Knock Sensor Circuit

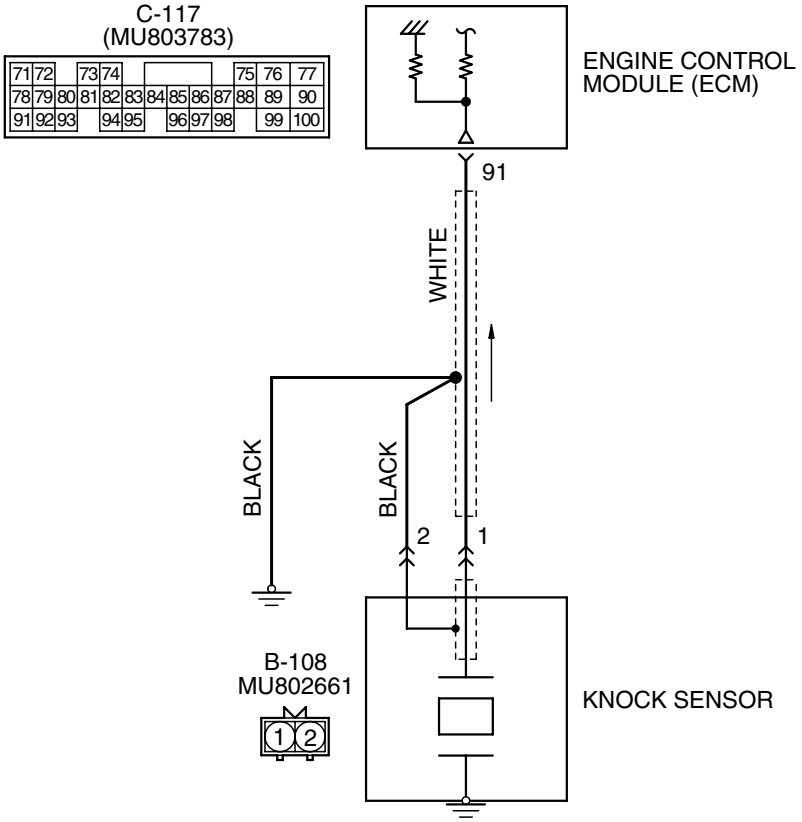

AK502071

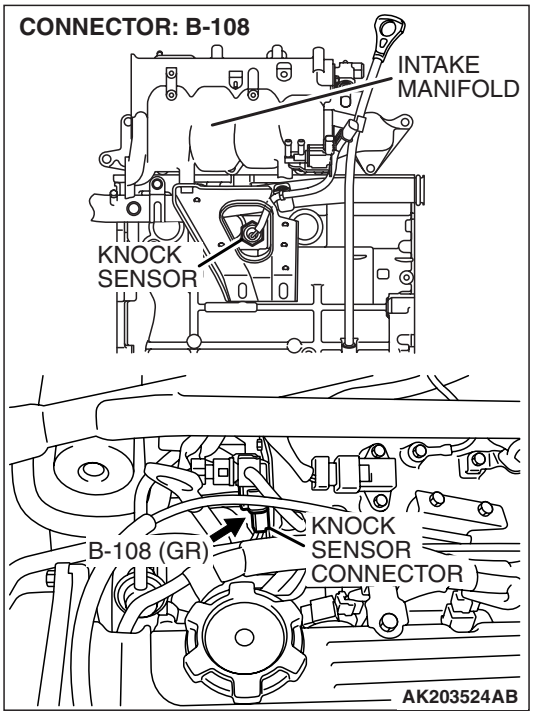

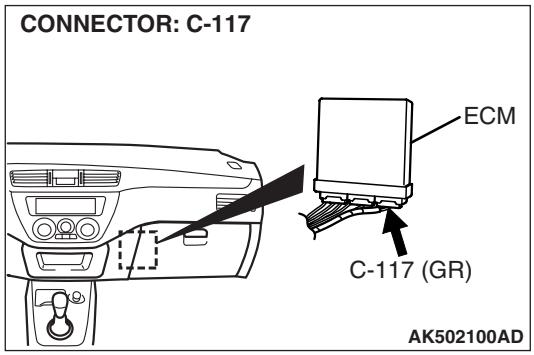

CIRCUIT OPERATION

- The knock sensor sends a signal voltage to the ECM (terminal No. 91).

TECHNICAL DESCRIPTION

- The knock sensor converts the vibration of the cylinder block into a voltage and outputs it. If there is a malfunction of the knock sensor, the voltage output will not change.
- The ECM checks whether the voltage output changes.

DTC SET CONDITIONS

Check Conditions

- 2 seconds or more have passed since the engine starting sequence was completed.
- Engine speed is higher than 2,500 r/min.
- Volumetric efficiency is higher than 25 percent.

Judgement Criterion

- Knock sensor output voltage (knock sensor peak voltage in each 1/2 turn of the crankshaft) has not changed more than 0.06 volt in the last consecutive 200 periods.

TROUBLESHOOTING HINTS (The most likely causes for this code to be set are:)

- Knock sensor failed.
- Open or shorted knock sensor circuit, harness damage, or connector damage.
- ECM failed.

DIAGNOSIS

Required Special Tools:

- MB991958: Scan Tool (M.U.T.-III Sub Assembly)
  - MB991824: V.C.I.
  - MB991827: USB Cable
  - MB991911: Main Harness B

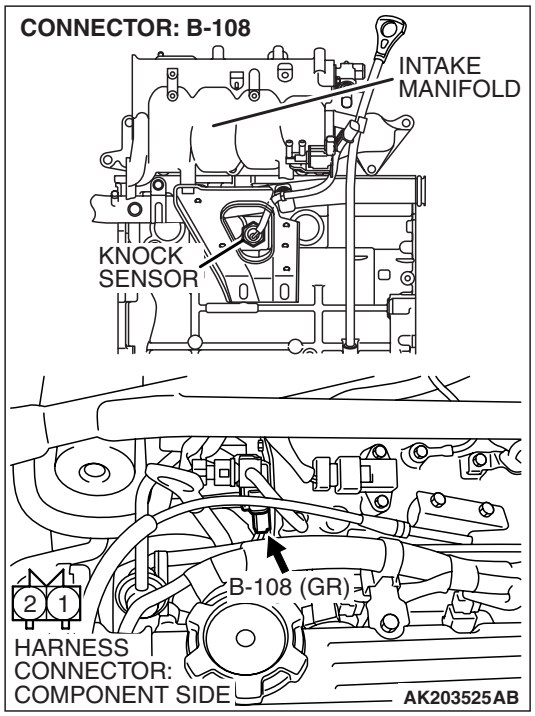

STEP 1. Check harness connector B-108 at the knock sensor for damage.

Q: Is the harness connector in good condition?

YES : Go to Step 2.

NO : Repair or replace it. Refer to GROUP 00E, Harness Connector Inspection P.00E-2. Then go to Step 6.

STEP 2. Check for continuity at knock sensor harness side connector B-108.

(1) Disconnect connector B-108 and measure at the harness side.

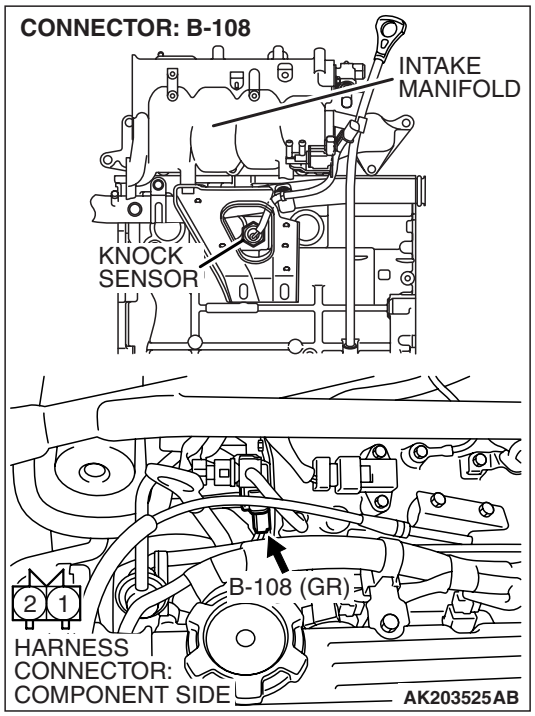

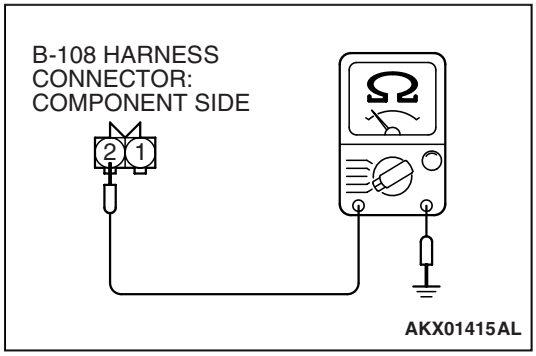

(2) Check for the continuity between terminal No. 2 and ground.
- Should be less than 2 ohms.

Q: Does continuity exist?

YES : Go to Step 3.

NO : Repair harness wire between knock sensor connector B-108 (terminal No. 2) and ground because of open circuit or harness damage. Then go to Step 6.

STEP 3. Check harness connector C-117 at ECM for damage.

Q: Is the harness connector in good condition?

YES : Go to Step 4.

NO : Repair or replace it. Refer to GROUP 00E, Harness Connector Inspection P.00E-2. Then go to Step 6.

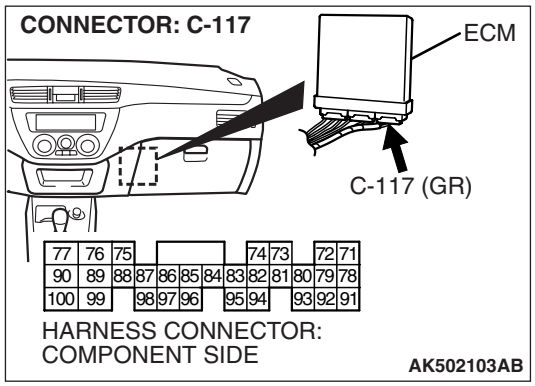

STEP 4. Check for open circuit and short circuit to ground and harness damage between knock sensor connector B-108 (terminal No. 1) and ECM connector C-117 (terminal No. 91).

Q: Is the harness wire in good condition?

YES : Go to Step 5.

NO : Repair it. Then go to Step 6.

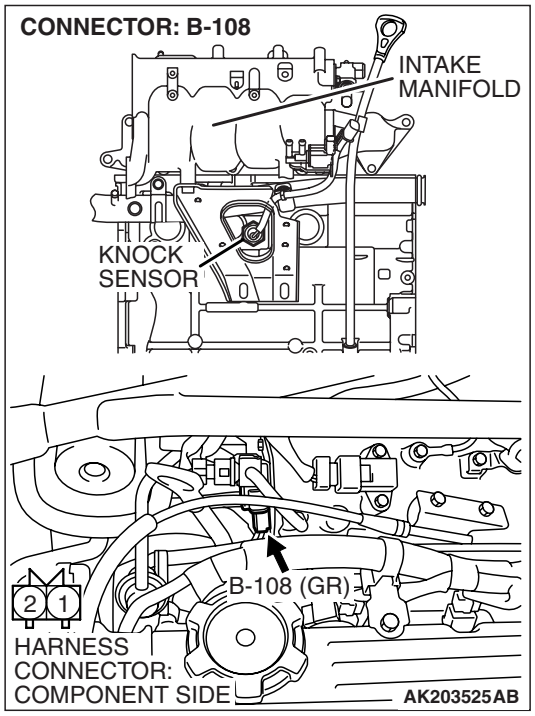

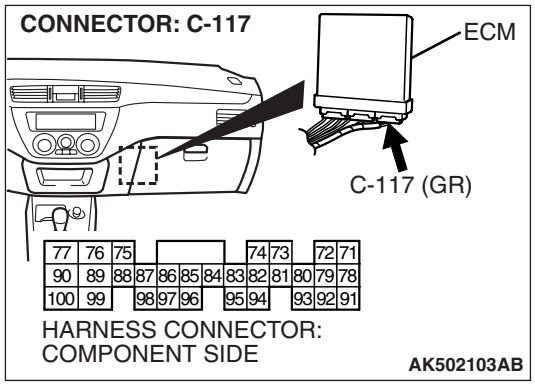

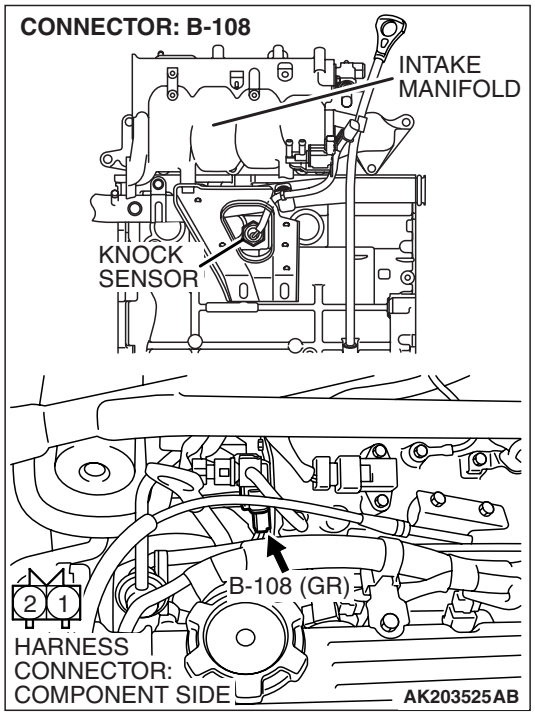

STEP 5. Check the knock sensor.

(1) Disconnect the knock sensor connector B-108.
(2) Start the engine and run at idle.
(3) Measure the voltage between knock sensor side connector terminal No. 1 (output) and No. 2 (ground).
(4) Gradually increase the engine speed.
- The voltage increases with the increase in the engine speed.

(5) Turn the ignition switch to the "LOCK"(OFF) position.

Q: Is the sensor operating properly?

YES : Replace the ECM. Then go to Step 6.
NO : Replace the knock sensor. Then go to Step 6.

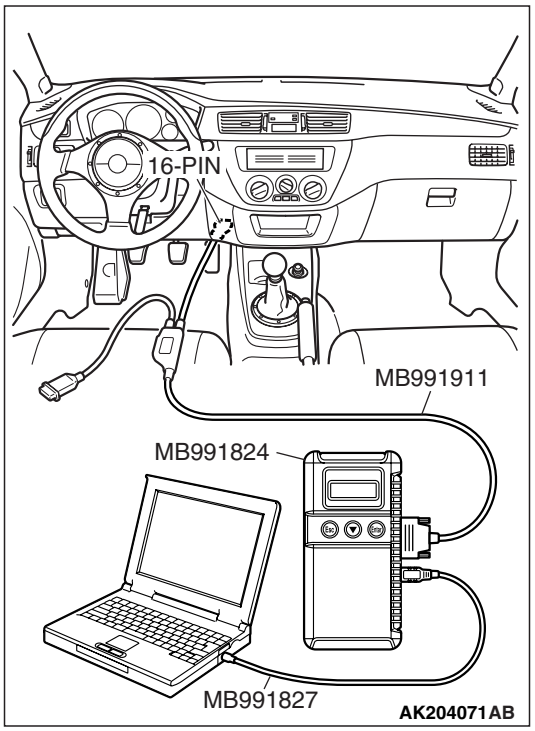

STEP 6. Using scan tool MB991958, read the diagnostic trouble code (DTC).

⚠ CAUTION

To prevent damage to scan tool MB991958, always turn the ignition switch to the "LOCK" (OFF) position before connecting or disconnecting scan tool MB991958.

(1) Connect scan tool MB991958 to the data link connector.
(2) Turn the ignition switch to the "ON" position.
(3) Erase the DTC.
(4) Test drive under the following conditions:
- Engine speed: 2,000 – 5,000r/min
- Engine load: 40% or more
- Drive a minimum of 3 seconds after the above conditions have been met.

(5) After completing the test drive, read the DTC. Turn the ignition switch to the "LOCK" (OFF) position.

Q: Is DTC P0325 set?

YES : Retry the troubleshooting.
NO : The inspection is complete.

DTC P0335: Crankshaft Position Sensor Circuit

Crankshaft Position Sensor Circuit

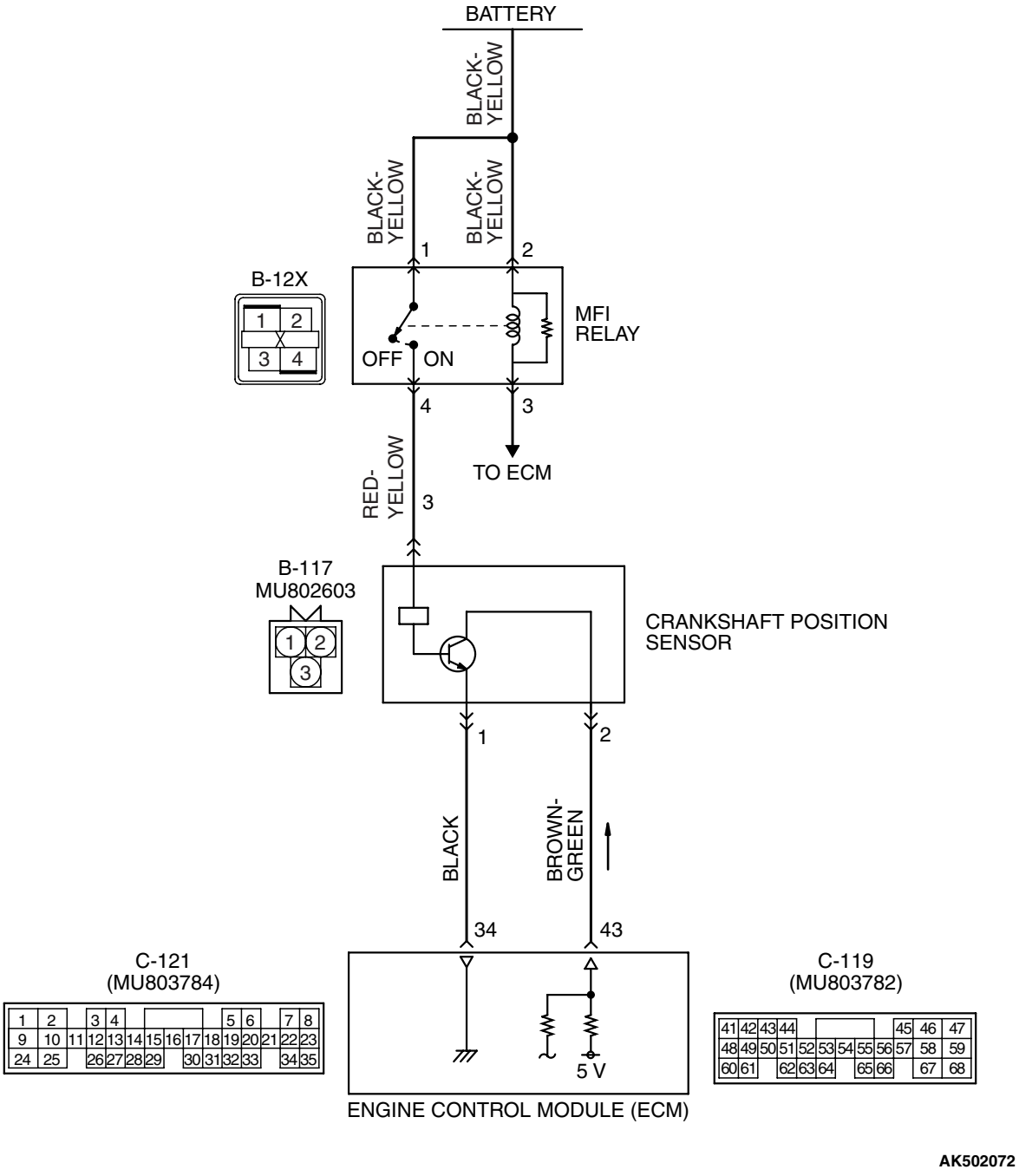

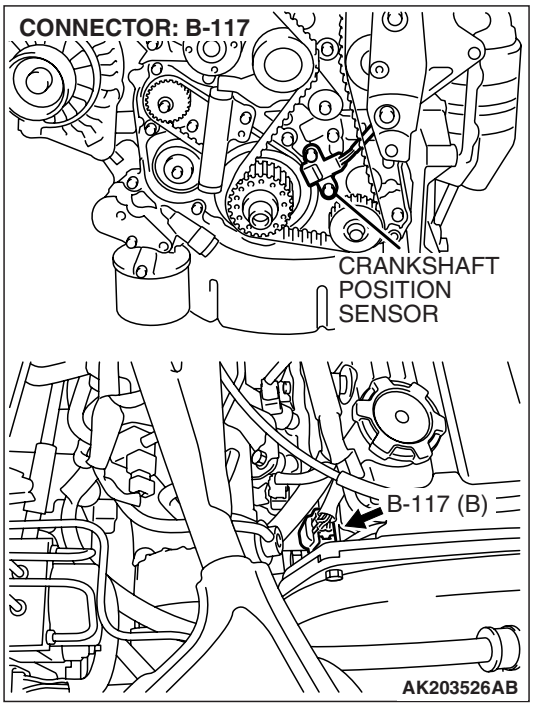

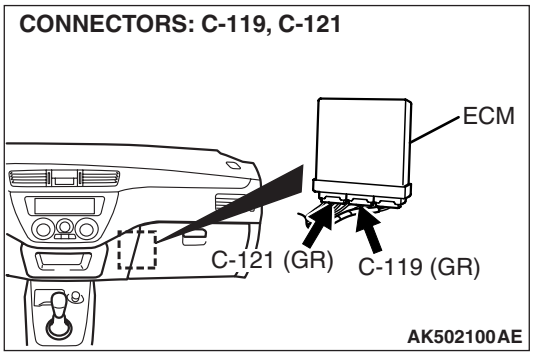

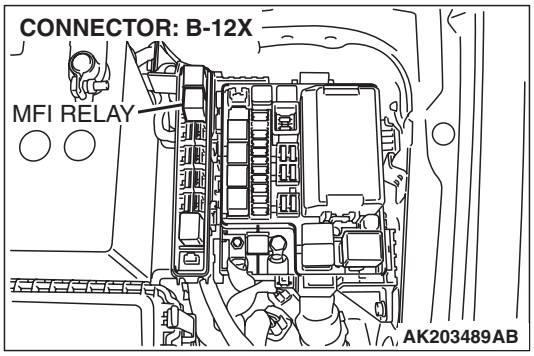

CIRCUIT OPERATION

- The crankshaft position sensor power is supplied from the MFI relay (terminal No. 4).
- Terminal No. 1 of the crankshaft position sensor is grounded with ECM (terminal No. 34).
- A 5-volt voltage is applied on the crankshaft position sensor output terminal (terminal No. 2) from the ECM (terminal No. 43). The crankshaft position sensor generates a pulse signal when the output terminal is opened and grounded.

TECHNICAL DESCRIPTION

- The crankshaft position sensor detects the crank angle (position) of each cylinder, and converts that data to pulse signals, which are then input to the ECM.
- When the engine is running, the crankshaft position sensor outputs a pulse signal.
- The ECM checks whether pulse signal is input while the engine is cranking.

DESCRIPTIONS OF MONITOR METHODS

- Crankshaft position sensor signal does not change.
- Crankshaft position sensor signal is not normal pattern.

MONITOR EXECUTION

- Continuous

MONITOR EXECUTION CONDITIONS (Other monitor and Sensor)

Other Monitor (There is no temporary DTC stored in memory for the item monitored below)

- Not applicable

Sensor (The sensor below is determined to be normal)

- Not applicable

DTC SET CONDITIONS <Range/Performance problem-alignment>

Logic Flow Chart

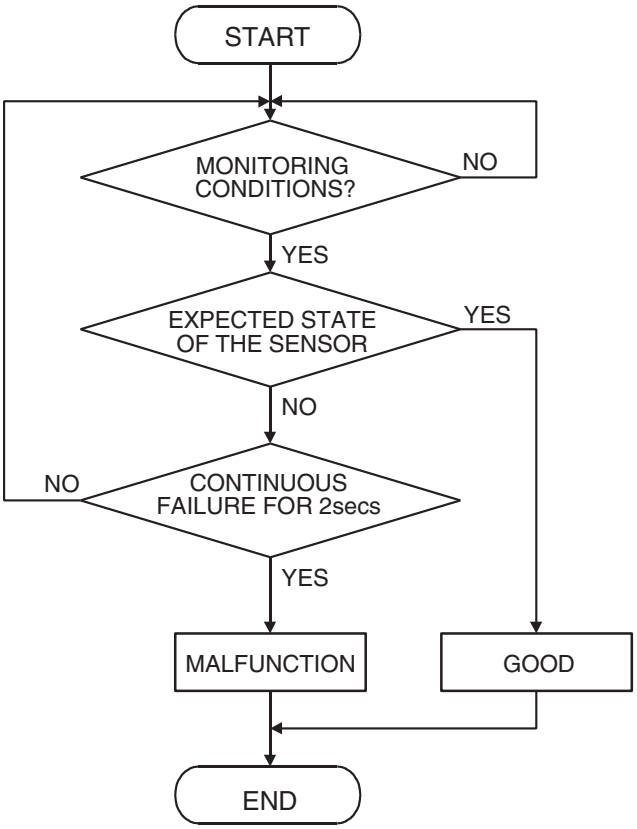

AK301446

Check Condition

- Engine is being cranked.

Judgment Criterion

- Crankshaft position sensor output voltage has not changed (no pulse signal is input) for 2 seconds.

DTC SET CONDITIONS <Circuit Continuity>

Logic Flow Chart

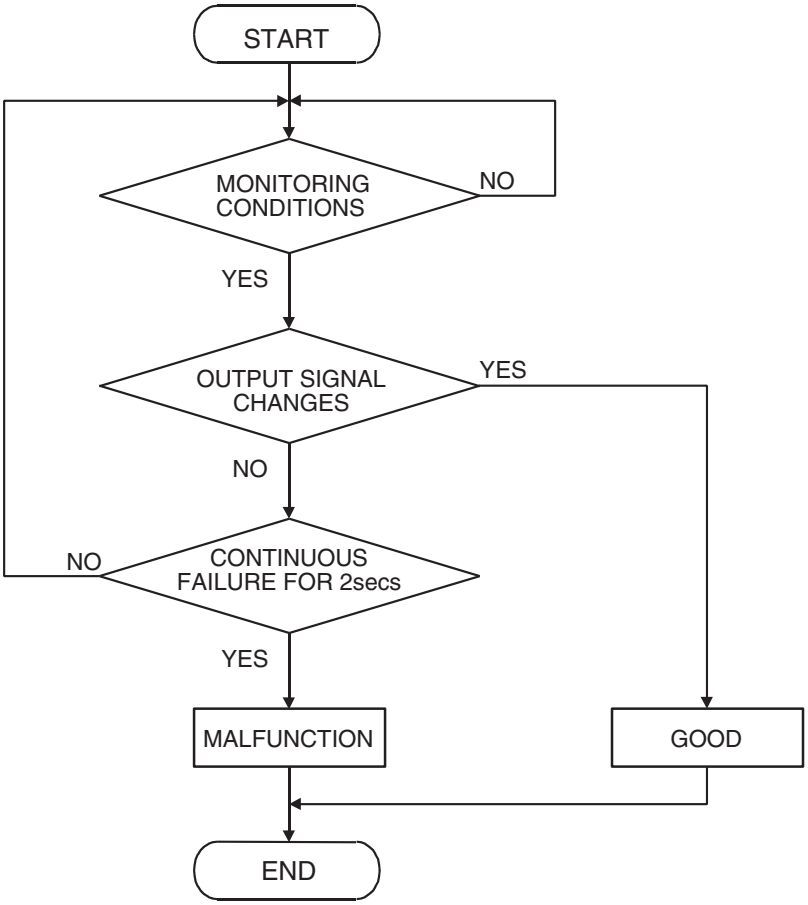

AK301487

Check Condition, Judgment Criterion

- Normal signal pattern has not been input for cylinder identification from the crankshaft position sensor signal and camshaft position sensor signal for 2 seconds.

OBD-II DRIVE CYCLE PATTERN

Refer to Diagnostic Function –OBD-II Drive Cycle – Pattern 23 P.13A-12.

TROUBLESHOOTING HINTS (The most likely causes for this code to be set are:)

- Crankshaft position sensor failed.
- Open or shorted crankshaft position sensor circuit, or connector damage.
- ECM failed.

DIAGNOSIS

Required Special Tools:

- MB991958: Scan Tool (M.U.T.-III Sub Assembly)
  - MB991824: V.C.I.
  - MB991827: USB Cable
  - MB991911: Main Harness B
- MD998478: Test Harness (3 pin, triangle)

TSB Revision

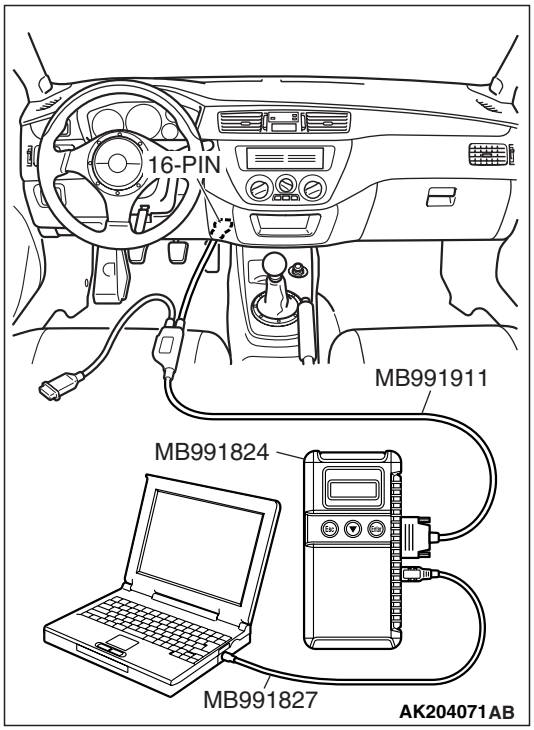

STEP 1. Using scan tool MB991958, check data list item 22: Crankshaft Position Sensor.

⚠ CAUTION

To prevent damage to scan tool MB991958, always turn the ignition switch to the "LOCK" (OFF) position before connecting or disconnecting scan tool MB991958.

(1) Connect scan tool MB991958 to the data link connector.
(2) Start the engine and run at idle.
(3) Set scan tool MB991958 to the data reading mode for item 22, Crankshaft Position Sensor.
- The tachometer and engine speed indicated on the scan tool should match.

(4) Turn the ignition switch to the "LOCK" (OFF) position.

Q: Is the sensor operating properly?

YES : It can be assumed that this malfunction is intermittent. Refer to GROUP 00, How to Use Troubleshooting/Inspection Service Points –How to Cope with Intermittent Malfunctions P.00-13.

NO : Go to Step 2.

STEP 2. Using the oscilloscope, check the crankshaft position sensor.

(1) Disconnect the crankshaft position sensor intermediate connector B-117, and connect test harness special tool (MD998478) in between.

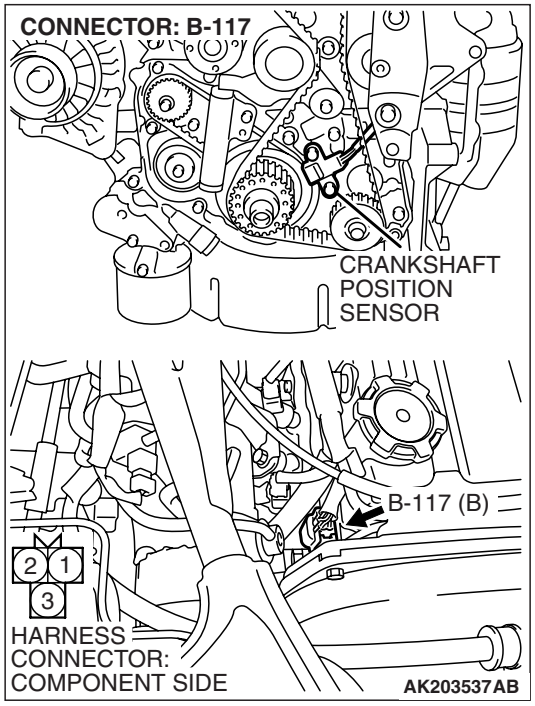

(2) Connect the oscilloscope probe to the crankshaft position sensor side connector terminal No. 2.

NOTE: Connect the oscilloscope probe to terminal No. 43 by backprobing when measuring with the ECM connector.

(3) Start the engine and run at idle.

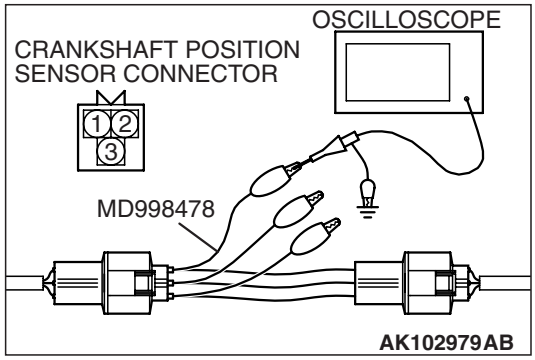

(4) Check the waveform.
- The waveform should show a pattern similar to the illustration.

(5) Turn the ignition switch to the "LOCK" (OFF) position.

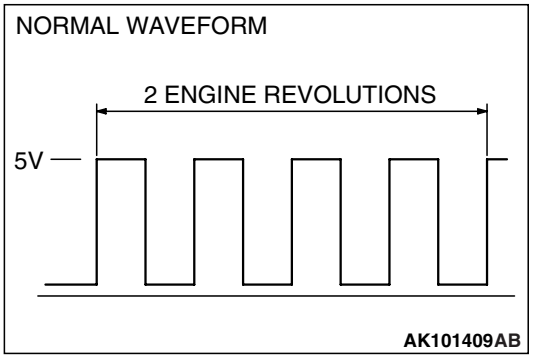

Q: Is the waveform normal?

YES : Go to Step 3.
NO : Go to Step 5.

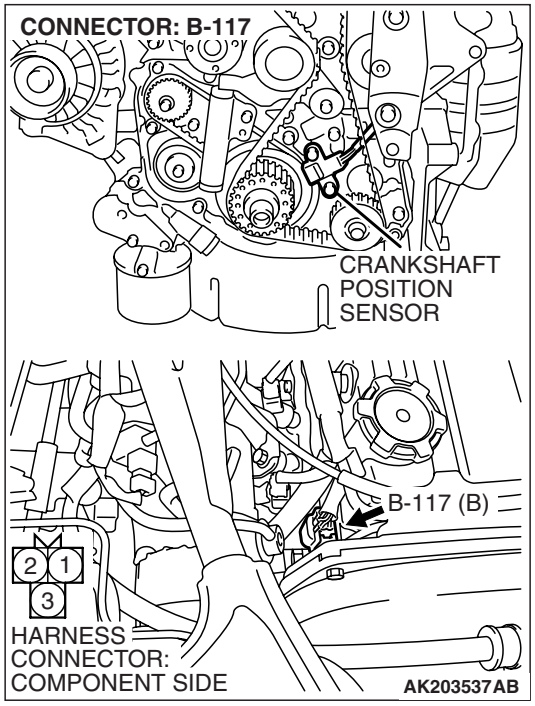

STEP 3. Check harness connector B-117 at the crankshaft position sensor for damage.

Q: Is the harness connector in good condition?

YES : Go to Step 4.

NO : Repair or replace it. Refer to GROUP 00E, Harness Connector Inspection P.00E-2. Then go to Step 21.

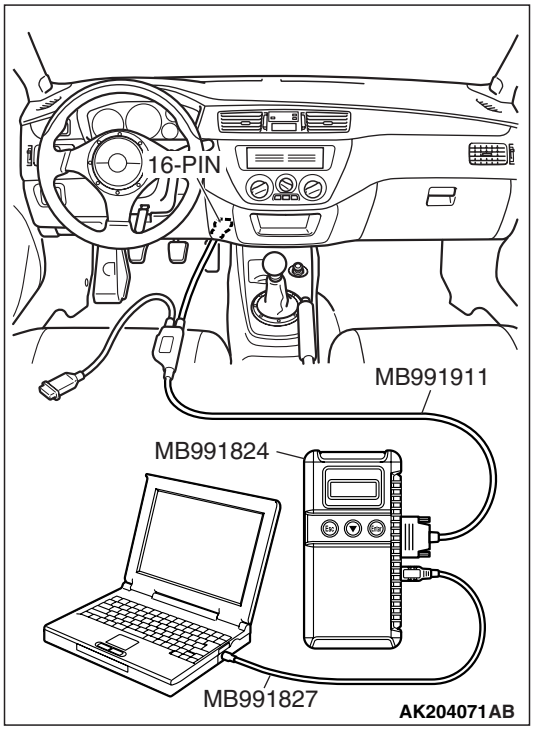

STEP 4. Using scan tool MB991958, check data list item 22: Crankshaft Position Sensor.

⚠ CAUTION

To prevent damage to scan tool MB991958, always turn the ignition switch to the "LOCK" (OFF) position before connecting or disconnecting scan tool MB991958.

(1) Connect scan tool MB991958 to the data link connector.
(2) Turn the ignition switch to the "ON" position.
(3) Set scan tool MB991958 to the data reading mode for item 22, Crankshaft Position Sensor.
- The tachometer and engine speed indicated on the scan tool should match.

(4) Turn the ignition switch to the "LOCK" (OFF) position.

Q: Is the sensor operating properly?

YES : It can be assumed that this malfunction is intermittent. Refer to GROUP 00, How to Use Troubleshooting/Inspection Service Points –How to Cope with Intermittent Malfunctions P.00-13.

NO : Replace the ECM. Then go to Step 21.

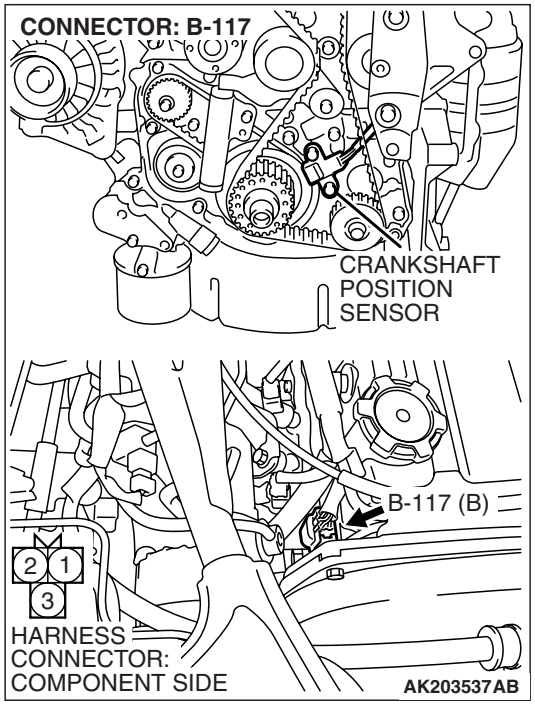

STEP 5. Check harness connector B-117 at the crankshaft position sensor for damage.

Q: Is the harness connector in good condition?

YES : Go to Step 6.

NO : Repair or replace it. Refer to GROUP 00E, Harness Connector Inspection P.00E-2. Then go to Step 21.

STEP 6. Measure the sensor supply voltage at crankshaft position sensor harness side connector B-117.

(1) Disconnect connector B-117 and measure at the harness side.

(2) Turn the ignition switch to the "ON" position.

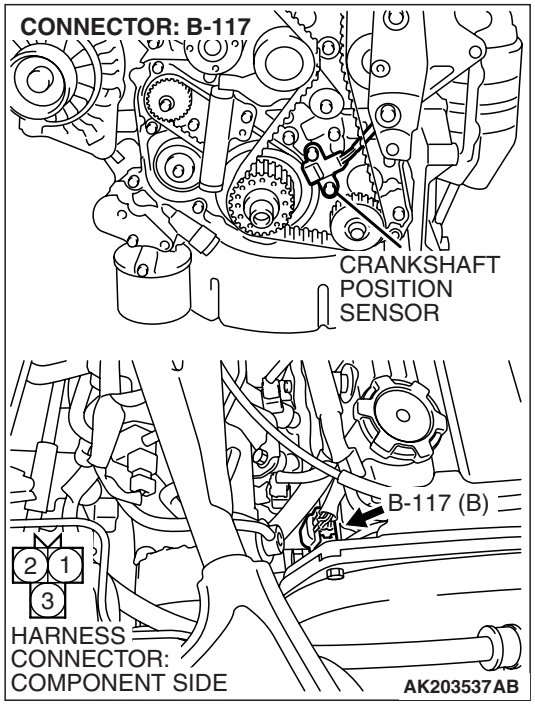

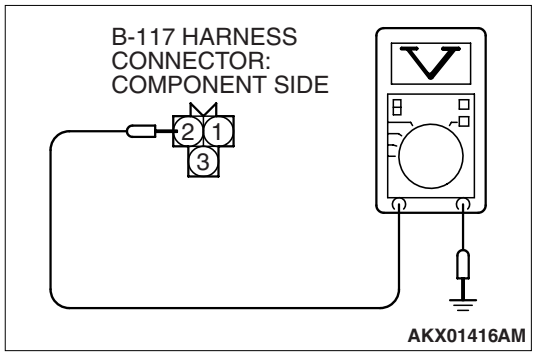

(3) Measure the voltage between terminal No. 2 and ground.
- Voltage should be between 4.8 and 5.2 volts.

(4) Turn the ignition switch to the "LOCK" (OFF) position.

Q: Is the measured voltage between 4.8 and 5.2 volts?

YES : Go to Step 11.

NO : Go to Step 7.

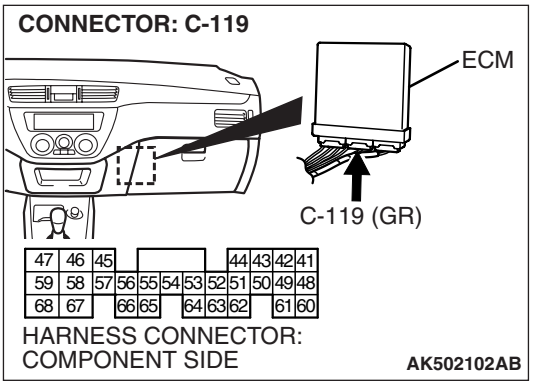

STEP 7. Measure the sensor supply voltage at ECM connector C-119 by backprobing.

(1) Do not disconnect the ECM connector C-119.
(2) Disconnect the crankshaft position sensor connector B-117.
(3) Turn the ignition switch to the "ON" position.

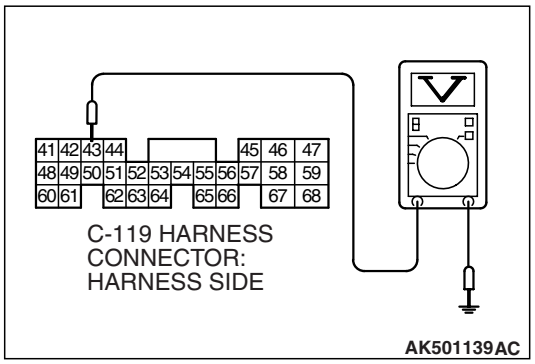

(4) Measure the voltage between terminal No. 43 and ground by backprobing.
- Voltage should be between 4.8 and 5.2 volts.

(5) Turn the ignition switch to the "LOCK" (OFF) position.

Q: Is the measured voltage between 4.8 and 5.2 volts?

YES : Go to Step 8.
NO : Go to Step 9.

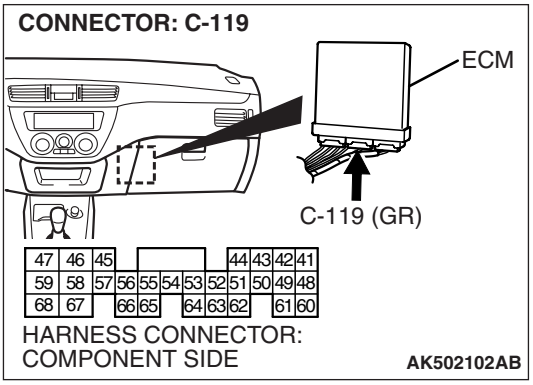

STEP 8. Check harness connector C-119 at ECM for damage.

Q: Is the harness connector in good condition?

YES : Repair harness wire between crankshaft position sensor connector B-117 (terminal No. 2) and ECM connector C-119 (terminal No. 43) because of open circuit. Then go to Step 21.
NO : Repair or replace it. Refer to GROUP 00E, Harness Connector Inspection P.00E-2. Then go to Step 21.

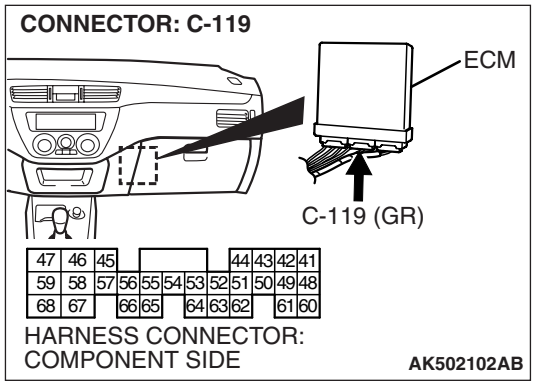

STEP 9. Check harness connector C-119 at ECM for damage.

Q: Is the harness connector in good condition?

YES : Go to Step 10.

NO : Repair or replace it. Refer to GROUP 00E, Harness Connector Inspection P.00E-2. Then go to Step 21.

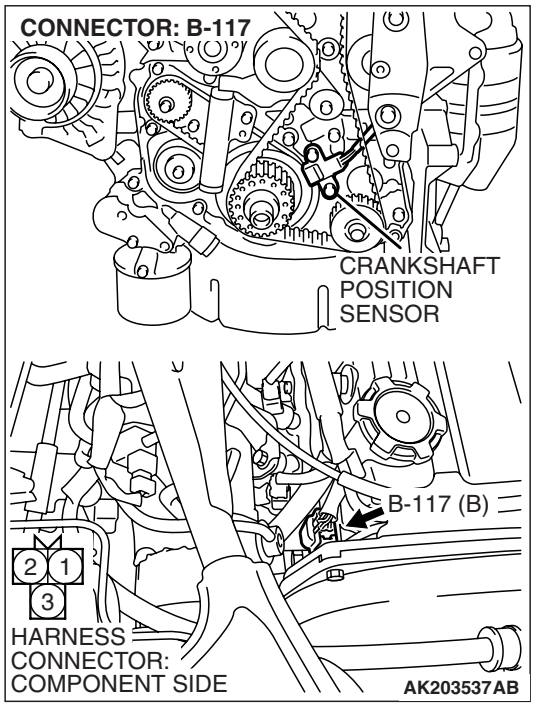

STEP 10. Check for short circuit to ground between crankshaft position sensor connector B-117 (terminal No. 2) and ECM connector C-119 (terminal No. 43).

Q: Is the harness wire in good condition?

YES : Replace the ECM. Then go to Step 21.

NO : Repair it. Then go to Step 21.

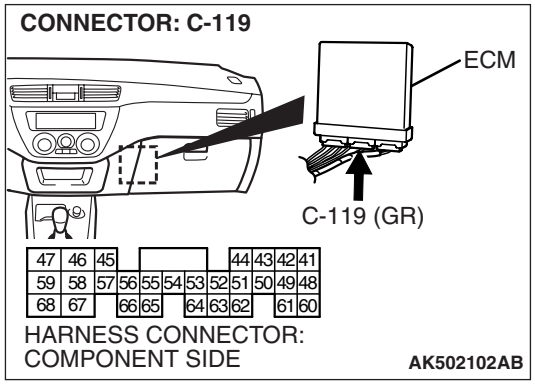

STEP 11. Measure the power supply voltage at crankshaft position sensor harness side connector B-117.

(1) Disconnect connector B-117 and measure at the harness side.

(2) Turn the ignition switch to the "ON" position.

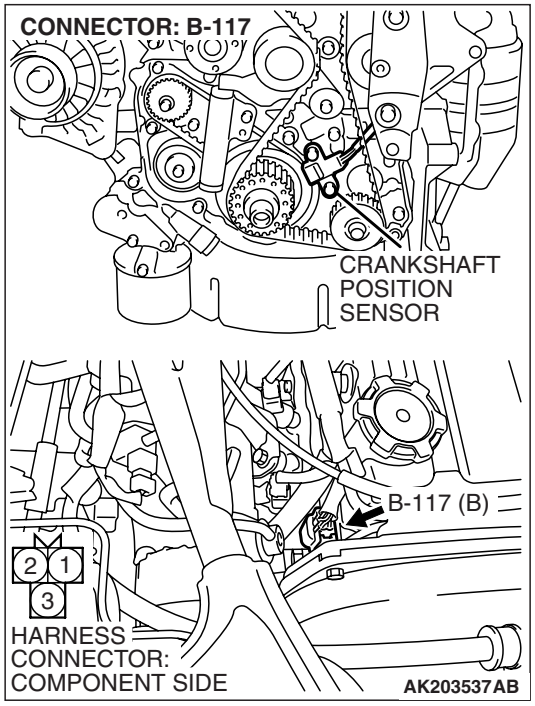

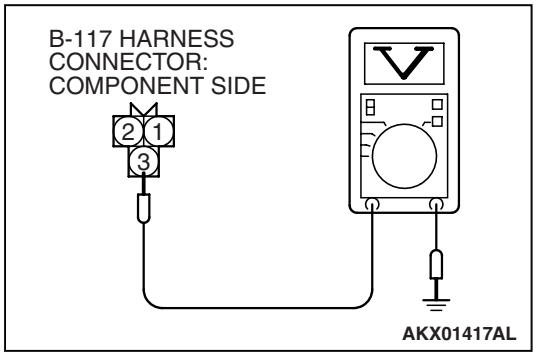

(3) Measure the voltage between terminal No. 3 and ground.
- Voltage should be battery positive voltage.

(4) Turn the ignition switch to the "LOCK" (OFF) position.

Q: Is battery positive voltage (approximately 12 volts) present?

YES : Go to Step 13.

NO : Go to Step 12.

STEP 12. Check harness connector B-12X at MFI relay for damage.

Q: Is the harness connector in good condition?

YES : Repair harness wire between MFI relay connector B-12X (terminal No. 4) and crankshaft position sensor connector B-117 (terminal No. 3) because of open circuit or short circuit to ground. Then go to Step 21.

NO : Repair or replace it. Refer to GROUP 00E, Harness Connector Inspection P.00E-2. Then go to Step 21.

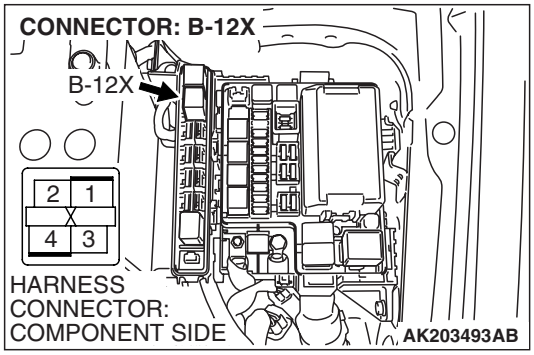

STEP 13. Check for continuity at crankshaft position sensor harness side connector B-117.

(1) Disconnect connector B-117 and measure at the harness side.

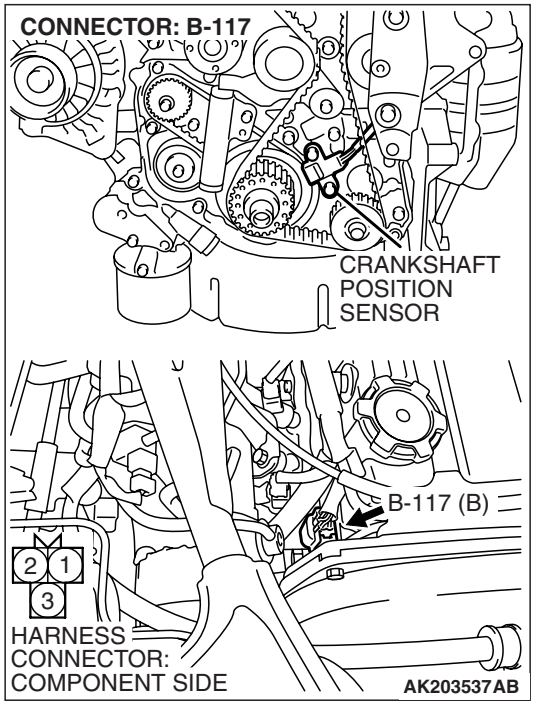

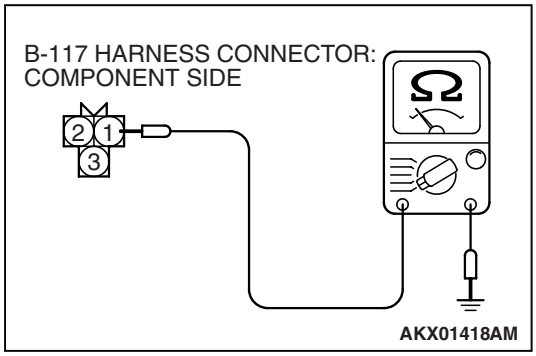

(2) Check for the continuity between terminal No. 1 and ground.
- Should be less than 2 ohms.

Q: Does continuity exist?

YES : Go to Step 16.
NO : Go to Step 14.

STEP 14. Check harness connector C-121 at ECM for damage.

Q: Is the harness connector in good condition?

YES : Go to Step 15.
NO : Repair or replace it. Refer to GROUP 00E, Harness Connector Inspection P.00E-2. Then go to Step 21.

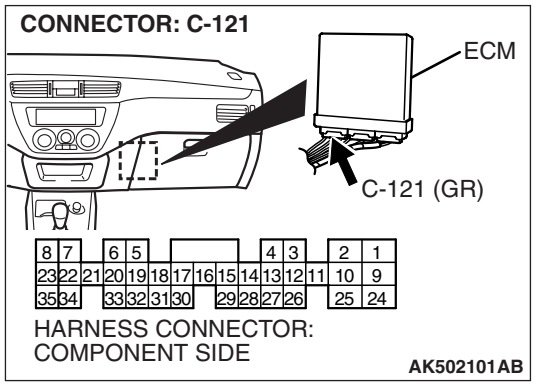

STEP 15. Check for open circuit and harness damage between crankshaft position sensor connector B-117 (terminal No. 1) and ECM connector C-121 (terminal No. 34).

Q: Is the harness wire in good condition?

YES : Replace the ECM. Then go to Step 21.

NO : Repair it. Then go to Step 21.

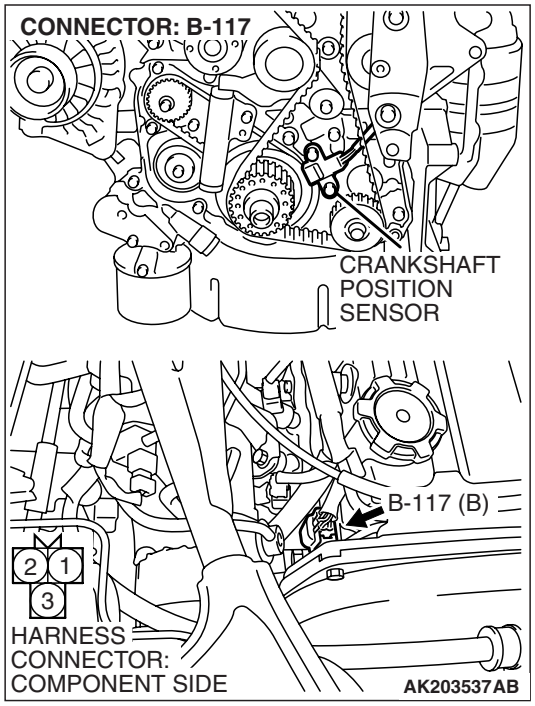

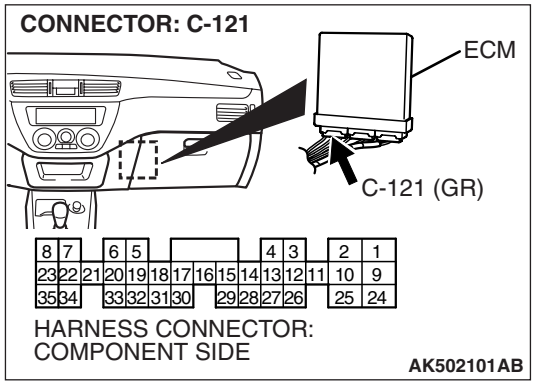

STEP 16. Check harness connector B-12X at the MFI relay for damage.

Q: Is the harness connector in good condition?

YES : Go to Step 17.

NO : Repair or replace it. Refer to GROUP 00E, Harness Connector Inspection P.00E-2. Then go to Step 21.

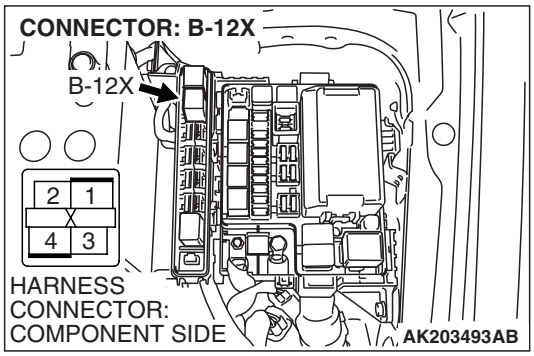

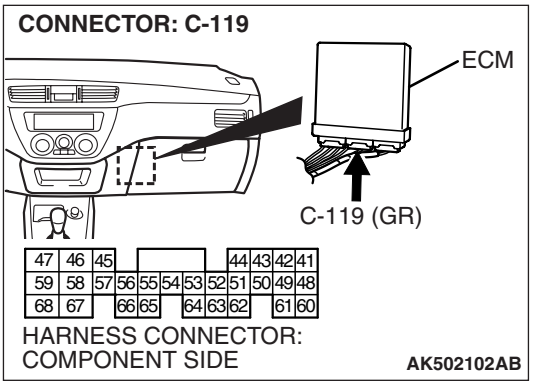

STEP 17. Check harness connector C-119 at ECM for damage.

Q: Is the harness connector in good condition?

YES : Go to Step 18.

NO : Repair or replace it. Refer to GROUP 00E, Harness Connector Inspection P.00E-2. Then go to Step 21.

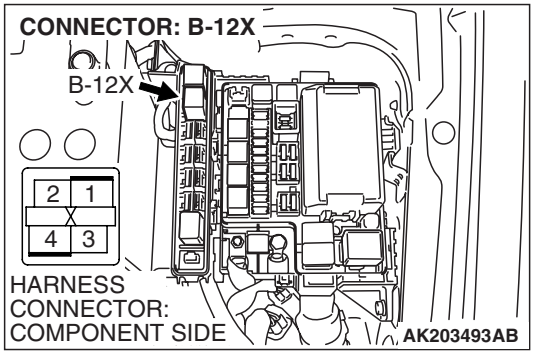

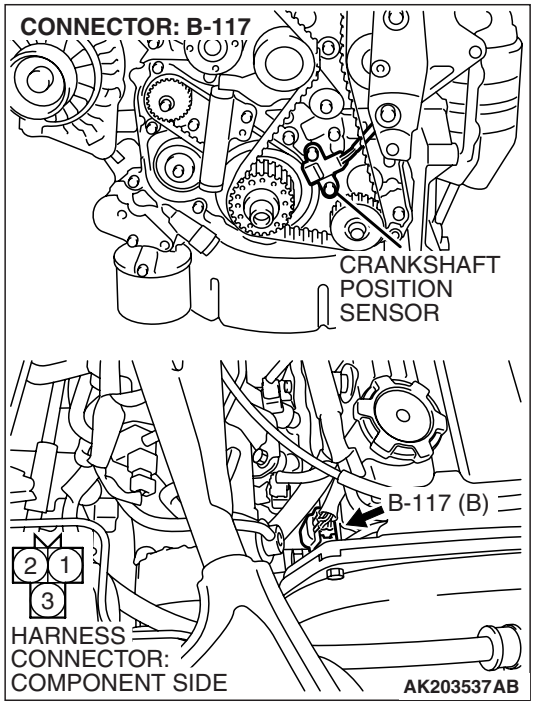

STEP 18. Check for harness damage between MFI relay connector B-12X (terminal No. 4) and crankshaft position sensor connector B-117 (terminal No. 3).

Q: Is the harness wire in good condition?

YES : Go to Step 19.

NO : Repair it. Then go to Step 21.

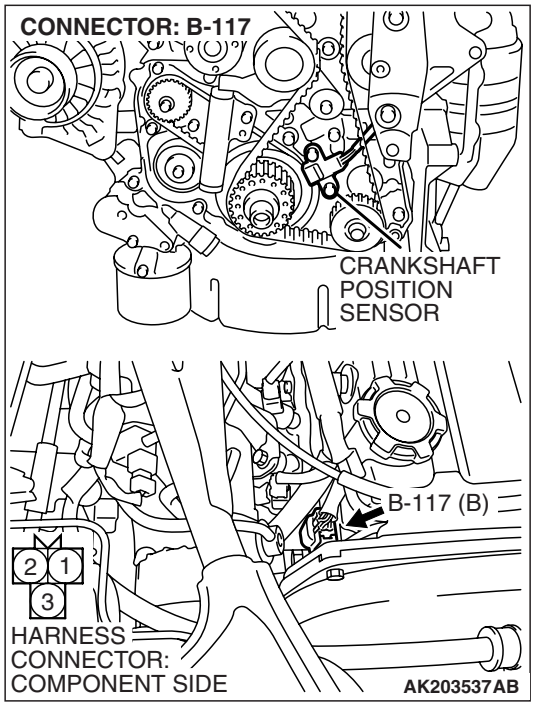

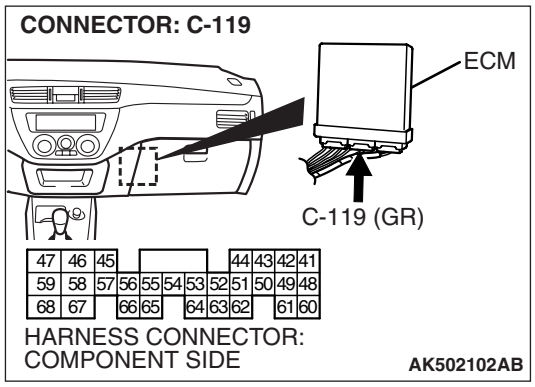

STEP 19. Check for harness damage between crankshaft position sensor connector B-117 (terminal No. 2) and ECM connector C-119 (terminal No. 43).

Q: Is the harness wire in good condition?

YES : Go to Step 20.

NO : Repair it. Then go to Step 21.

STEP 20. Check the crankshaft sensing blade.

Q: Is the crankshaft sensing blade in a good condition?

YES : Replace the crankshaft position sensor. Then go to Step 21.

NO : Replace it. Then go to Step 21.

STEP 21. Test the OBD-II drive cycle.

(1) Carry out a test drive with the drive cycle pattern. Refer to GROUP 13A, Diagnostic Function –OBD-II Drive Cycle – Pattern 23 P.13A-12.

(2) Check the diagnostic trouble code (DTC).

Q: Is DTC P0335 set?

YES : Retry the troubleshooting.

NO : The inspection is complete.

DTC P0340: Exhaust Camshaft Position Sensor Circuit

Exhaust Camshaft Position Sensor Circuit

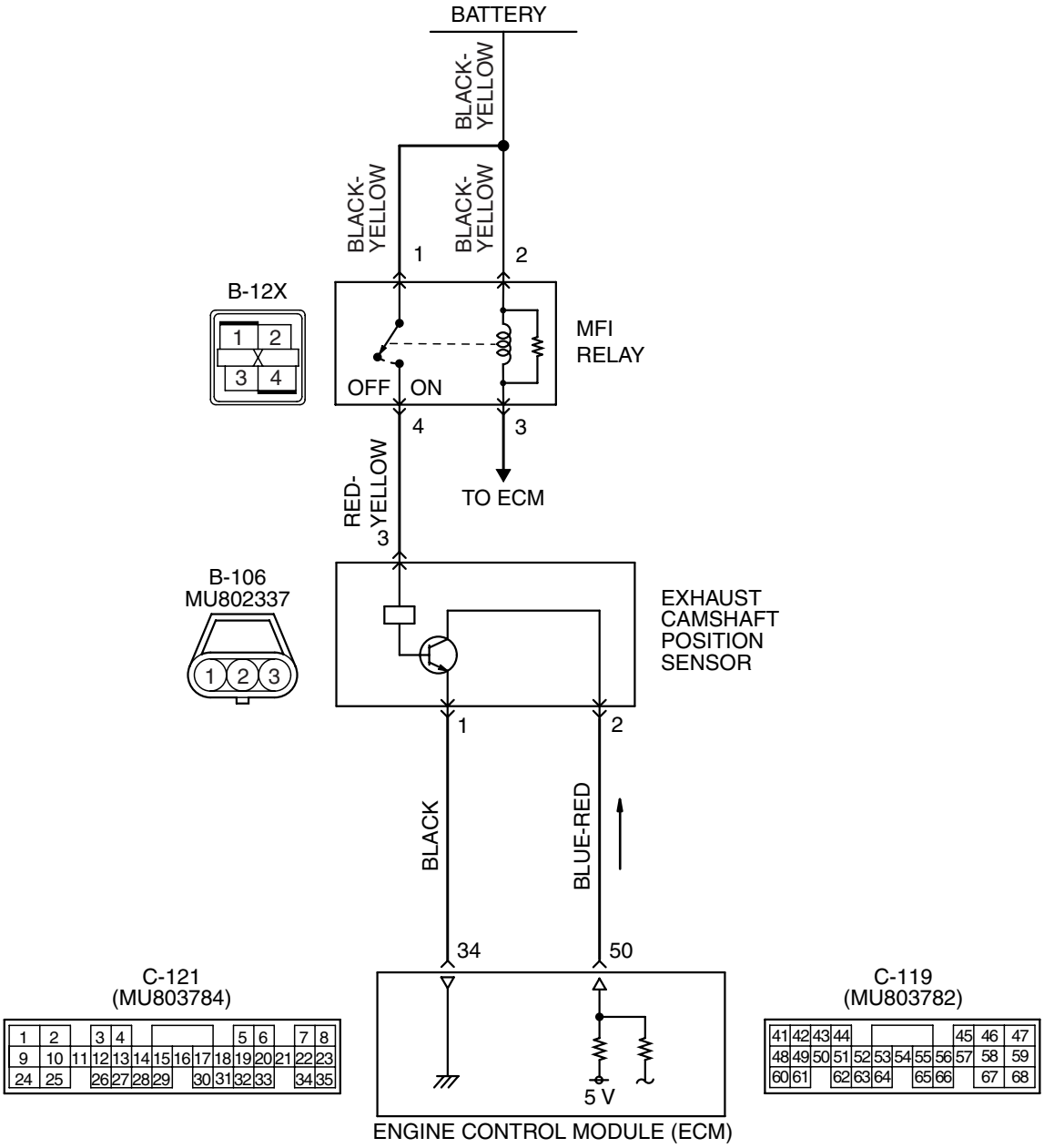

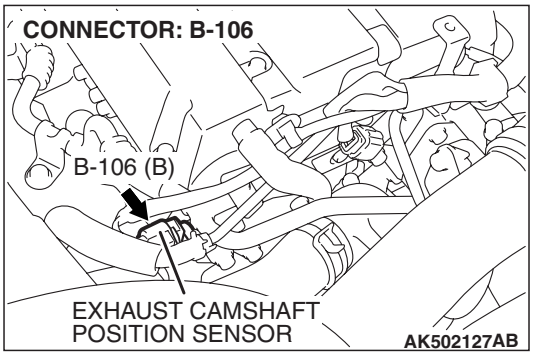

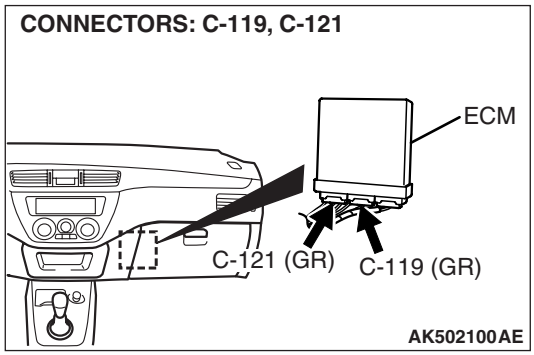

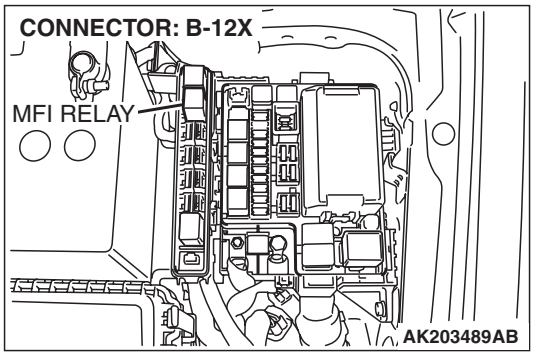

CIRCUIT OPERATION

- The exhaust camshaft position sensor power is supplied from the MFI relay (terminal No. 4).
- Terminal No. 1 of the exhaust camshaft position sensor is grounded with ECM (terminal No. 34).
- A 5-volt voltage is applied on the exhaust camshaft position sensor output terminal (terminal No. 2) from the ECM (terminal No. 50). The exhaust camshaft position sensor generates a pulse signal when the output terminal is opened and grounded.

TECHNICAL DESCRIPTION

- The exhaust camshaft position sensor functions to detect the top dead center position of the number 1 cylinder and to convert that data to pulse signals that are input to the ECM.
- When the engine is running, the exhaust camshaft position sensor outputs a pulse signal.
- The ECM checks whether pulse signal is input while the engine is cranking.

DESCRIPTIONS OF MONITOR METHODS

- Exhaust camshaft position sensor signal does not change.
- Exhaust camshaft position sensor signal is not normal pattern.

MONITOR EXECUTION

- Continuous

MONITOR EXECUTION CONDITIONS (Other monitor and Sensor)

Other Monitor (There is no temporary DTC stored in memory for the item monitored below)

- Not applicable

Sensor (The sensor below is determined to be normal)

- Not applicable

DTC SET CONDITIONS <Range/Performance problem-alignment>

Logic Flow Chart

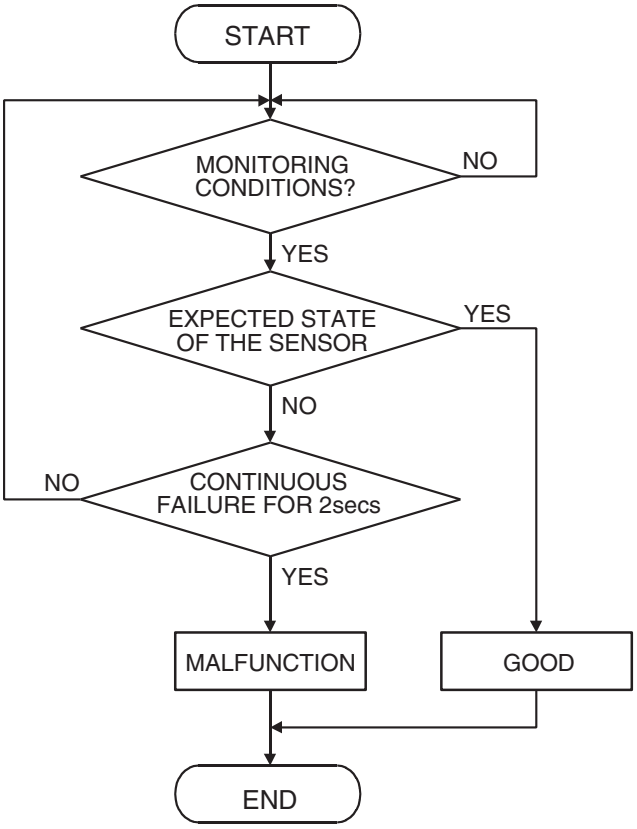

AK301447

Check Condition

- Engine speed is higher than 50 r/min.

Judgment Criterion

- Exhaust camshaft position sensor output voltage has not changed (no pulse signal is input) for 2 seconds.

DTC SET CONDITIONS <Circuit continuity>

Logic Flow Chart

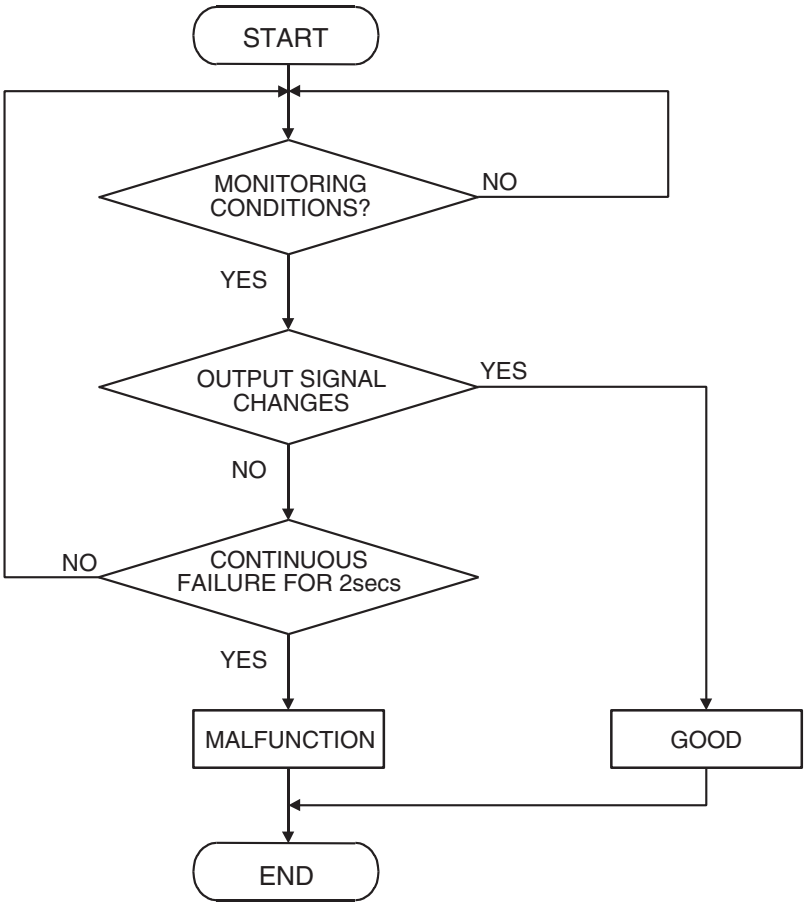

AK301448

Check Condition
- Engine speed is higher than 50 r/min.

Judgment Criterion
- Normal signal pattern has not been input for cylinder identification from the crankshaft position sensor signal and exhaust camshaft position sensor signal for 2 seconds.

OBD-II DRIVE CYCLE PATTERN

Refer to, Diagnostic Function –OBD-II Drive Cycle – Pattern 23 P.13A-12.

TROUBLESHOOTING HINTS (The most likely causes for this code to be set are:)

- Exhaust camshaft position sensor failed.
- Open or shorted exhaust camshaft position sensor circuit, harness damage, or connector damage.
- ECM failed.

DIAGNOSIS

Required Special Tool:
- MB991709: Test Harness Set

STEP 1. Using the oscilloscope, check the exhaust camshaft position sensor.

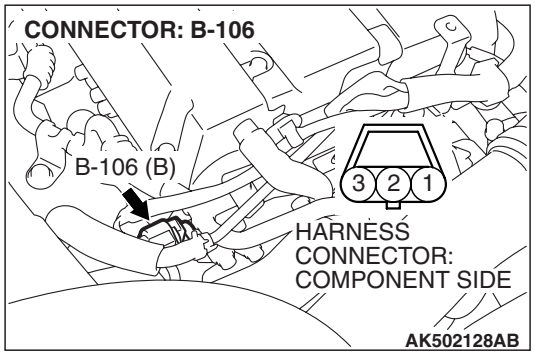

(1) Disconnect the exhaust camshaft position sensor connector B-106, and connect test harness special tool (MB991709) in between. (All terminals should be connected.)

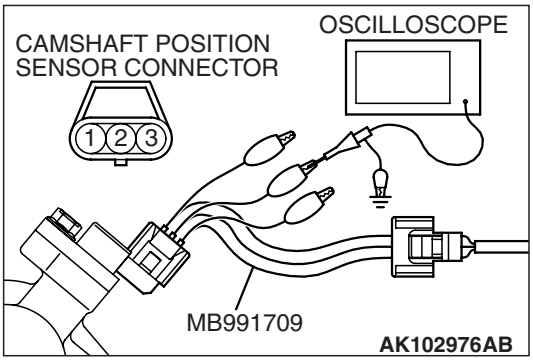

(2) Connect the oscilloscope probe to the exhaust camshaft position sensor side connector terminal No. 2.

NOTE: When measuring with the ECM side connector, connect an oscilloscope probe to terminal No. 50.

(3) Start the engine and run at idle.

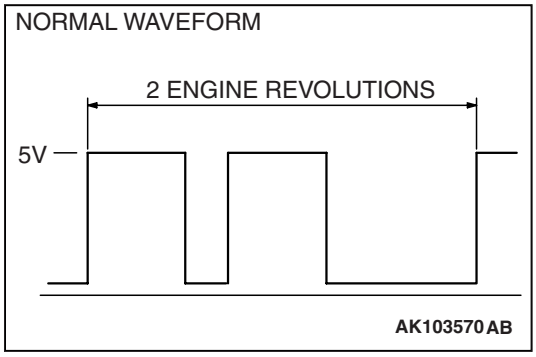

(4) Check the waveform.
- The waveform should show a pattern similar to the illustration.

(5) Turn the ignition switch to the "LOCK" (OFF) position.

Q: Is the waveform normal?

YES : Go to Step 2..
NO : Go to Step 4.

STEP 2. Check harness connector B-106 at exhaust camshaft position sensor for damage.

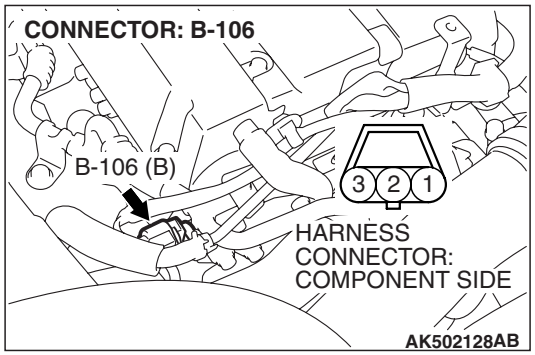

Q: Is the harness connector in good condition?

YES : Go to Step 3.
NO : Repair or replace it. Refer to GROUP 00E, Harness Connector Inspection P.00E-2. Then go to Step 20.

STEP 3. Check the trouble symptoms.

(1) Carry out a test drive with the drive cycle pattern. Refer to GROUP 13A, Diagnostic Function –OBD-II Drive Cycle – Pattern 23 P.13A-12.

(2) Check the diagnostic trouble code (DTC).

Q: Is DTC P0340 set?

YES : Replace the ECM. Then go to Step 20.

NO : It can be assumed that this malfunction is intermittent. Refer to GROUP 00, How to Use Troubleshooting/Inspection Service Points –How to Cope with Intermittent Malfunctions P.00-13.

STEP 4. Check harness connector B-106 at exhaust camshaft position sensor for damage.

Q: Is the harness connector in good condition?

YES : Go to Step 5.

NO : Repair or replace it. Refer to GROUP 00E, Harness Connector Inspection P.00E-2. Then go to Step 20.

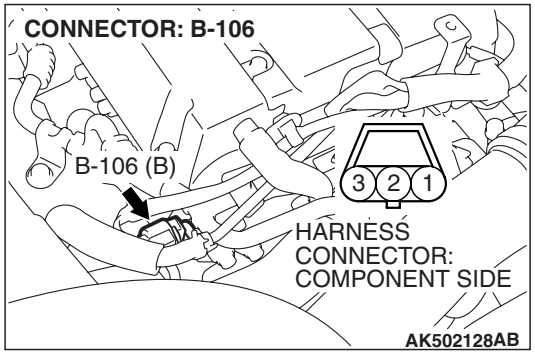

STEP 5. Measure the sensor supply voltage at exhaust camshaft position sensor connector B-106.

(1) Disconnect connector B-106 and measure at the harness side.

(2) Turn the ignition switch to the "ON" position.

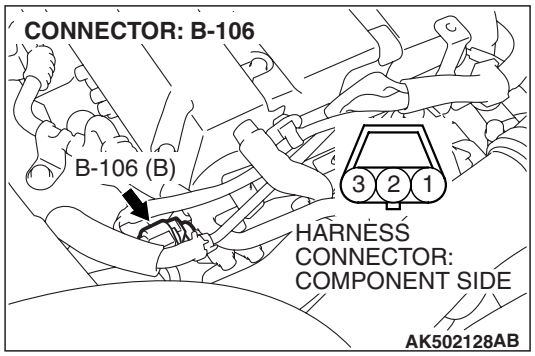

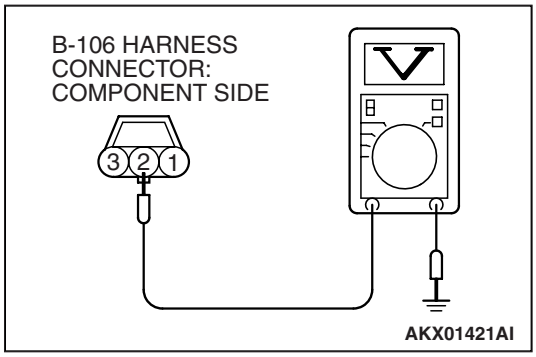

(3) Measure the voltage between terminal No. 2 and ground.
- Voltage should be between 4.8 and 5.2 volts.

(4) Turn the ignition switch to the "LOCK" (OFF) position.

Q: Is the measured voltage between 4.8 and 5.2 volts?

YES : Go to Step 10.

NO : Go to Step 6.

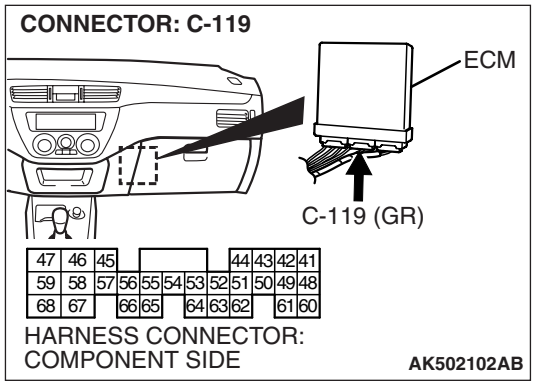

STEP 6. Measure the sensor supply voltage at ECM connector C-119 by backprobing.

(1) Do not disconnect the ECM connector C-119.
(2) Disconnect the exhaust camshaft position sensor connector B-106.
(3) Turn the ignition switch to the "ON" position.

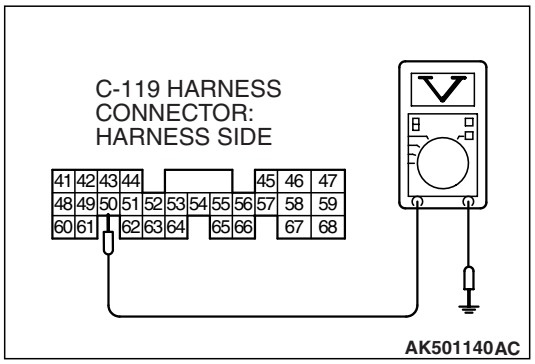

(4) Measure the voltage between terminal No. 50 and ground by backprobing.
- Voltage should be between 4.8 and 5.2 volts.

(5) Turn the ignition switch to the "LOCK" (OFF) position.

Q: Is the measured voltage between 4.8 and 5.2 volts?

YES : Go to Step 7.
NO : Go to Step 8.

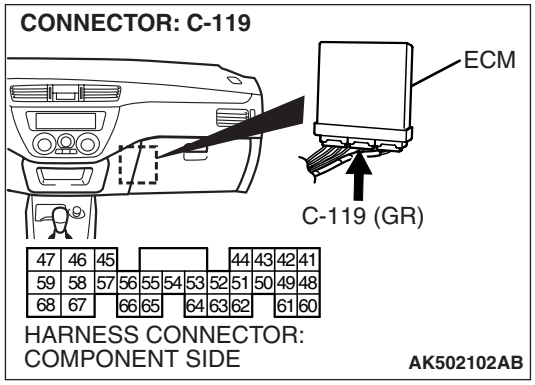

STEP 7. Check harness connector C-119 at ECM for damage.

Q: Is the harness connector in good condition?

YES : Repair harness wire between exhaust camshaft position sensor connector B-106 (terminal No. 2) and ECM connector C-119 (terminal No. 50) because of open circuit. Then go to Step 20.
NO : Repair or replace it. Refer to GROUP 00E, Harness Connector Inspection P.00E-2. Then go to Step 20.

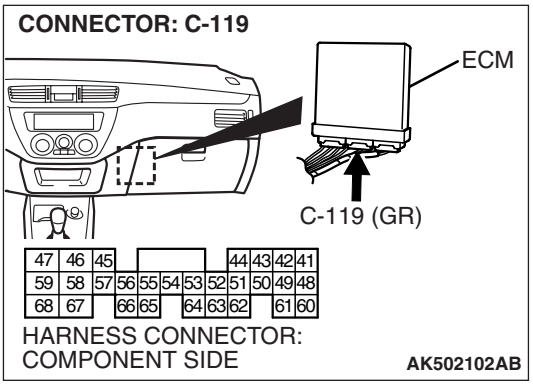

STEP 8. Check harness connector C-119 at ECM for damage.

Q: Is the harness connector in good condition?

YES : Go to Step 9.

NO : Repair or replace it. Refer to GROUP 00E, Harness Connector Inspection P.00E-2. Then go to Step 20.

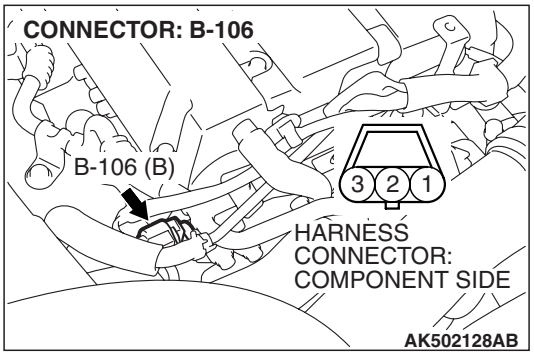

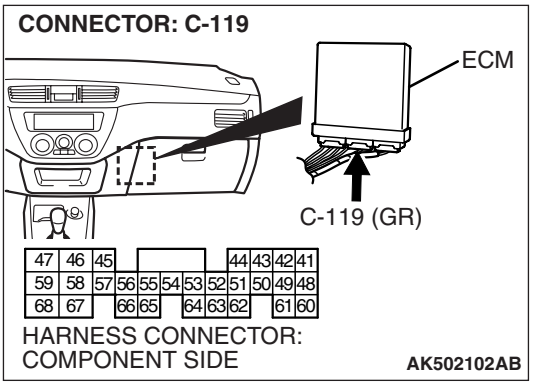

STEP 9. Check for short circuit to ground between exhaust camshaft position sensor connector B-106 (terminal No. 2) and ECM connector C-119 (terminal No. 50).

Q: Is the harness wire in good condition?

YES : Replace the ECM. Then go to Step 20.

NO : Repair it. Then go to Step 20.

STEP 10. Measure the power supply voltage at exhaust camshaft position sensor connector B-106.

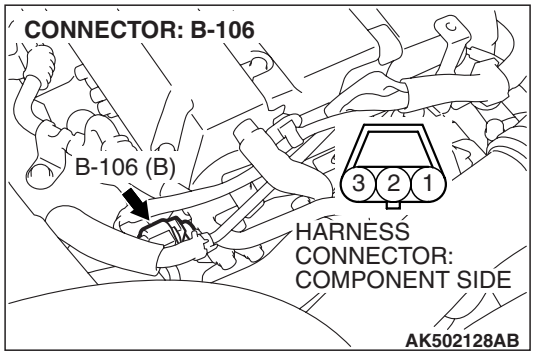

(1) Disconnect connector B-106 and measure at the harness side.
(2) Turn the ignition switch to the "ON" position.

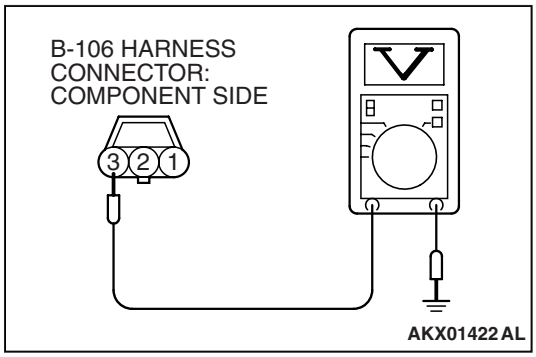

(3) Measure the voltage between terminal No. 3 and ground.
- Voltage should be battery positive voltage.

(4) Turn the ignition switch to the "LOCK" (OFF) position.

Q: Is battery positive voltage (approximately 12 volts) present?

YES : Go to Step 12.
NO : Go to Step 11.

STEP 11. Check harness connector B-12X at MFI relay for damage.

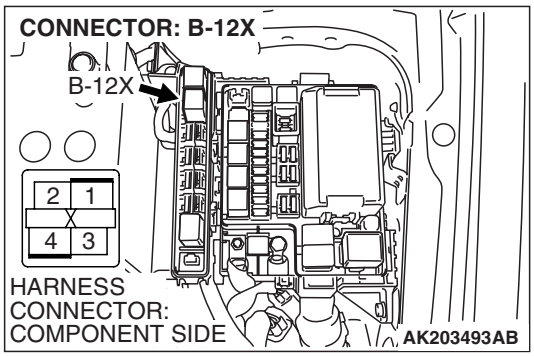

Q: Is the harness connector in good condition?

YES : Repair harness wire between MFI relay connector B-12X (terminal No. 4) and exhaust camshaft position sensor connector B-106 (terminal No. 3) because of open circuit or short circuit to ground. Then go to Step 20.
NO : Repair or replace it. Refer to GROUP 00E, Harness Connector Inspection P.00E-2. Then go to Step 20.

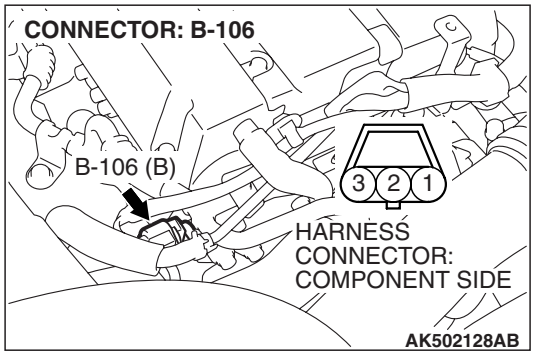

STEP 12. Check for continuity at exhaust camshaft position sensor connector B-106.

(1) Disconnect connector B-106 and measure at the harness side.

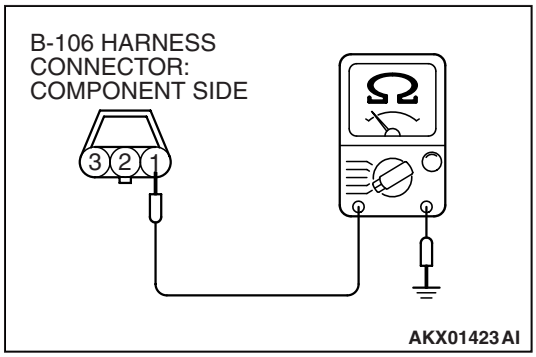

(2) Check for the continuity between terminal No. 1 and ground.
- Should be less than 2 ohms.

Q: Does continuity exist?

YES : Go to Step 15.
NO : Go to Step 13.

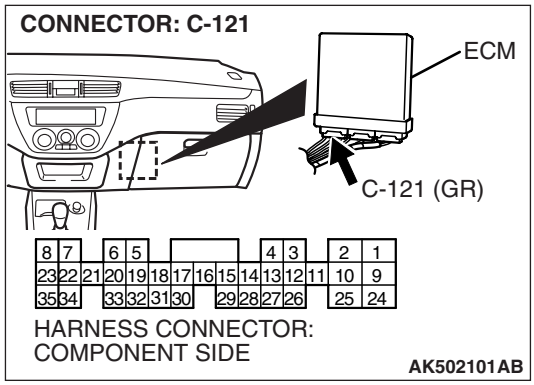

STEP 13. Check harness connector C-121 at ECM for damage.

Q: Is the harness connector in good condition?

YES : Go to Step 14.
NO : Repair or replace it. Refer to GROUP 00E, Harness Connector Inspection P.00E-2. Then go to Step 20.

STEP 14. Check for open circuit and harness damage between exhaust camshaft position sensor connector B-106 (terminal No. 1) and ECM connector C-121 (terminal No. 34).

Q: Is the harness wire in good condition?

YES : Replace the ECM. Then go to Step 20.

NO : Repair it. Then go to Step 20.

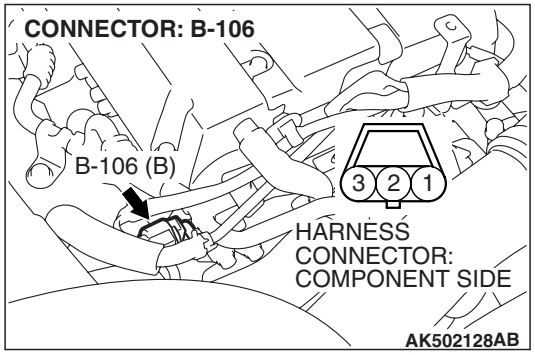

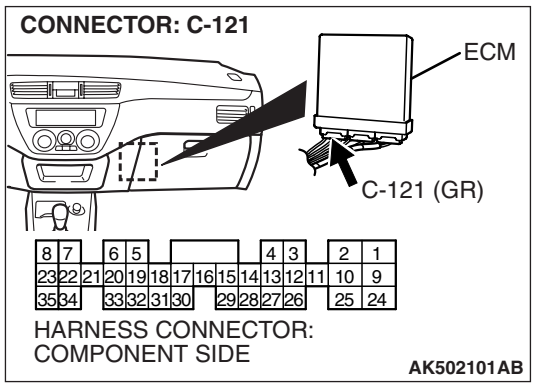

STEP 15. Check harness connector B-12X at the MFI relay for damage.

Q: Is the harness connector in good condition?

YES : Go to Step 16.

NO : Repair or replace it. Refer to GROUP 00E, Harness Connector Inspection P.00E-2. Then go to Step 20.

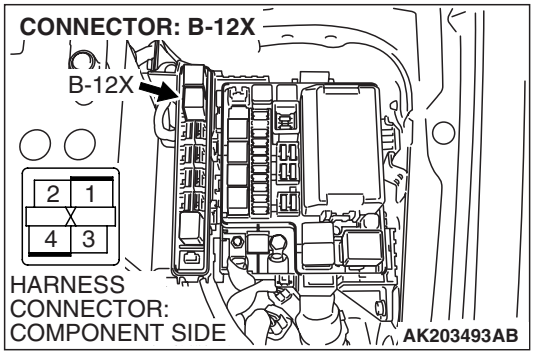

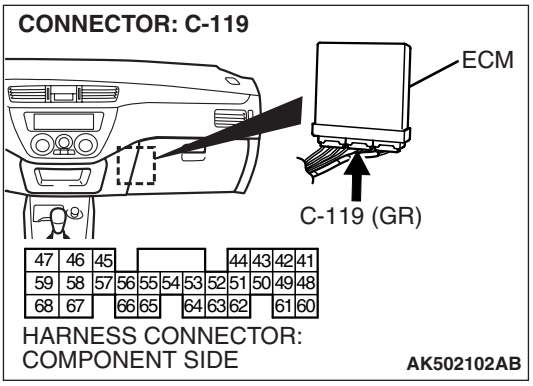

STEP 16. Check harness connector C-119 at ECM for damage.

Q: Is the harness connector in good condition?

YES : Go to Step 17.

NO : Repair or replace it. Refer to GROUP 00E, Harness Connector Inspection P.00E-2. Then go to Step 20.

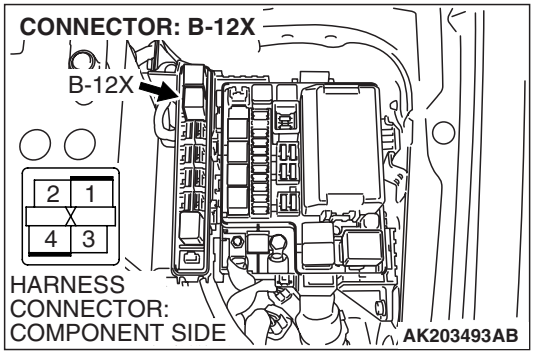

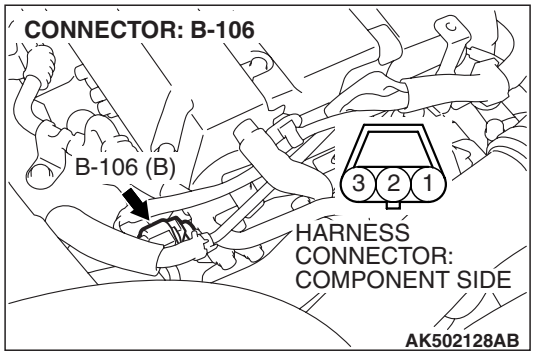

STEP 17. Check for harness damage between MFI relay connector B-12X (terminal No. 4) and exhaust camshaft position sensor connector B-106 (terminal No. 3).

Q: Is the harness wire in good condition?

YES : Go to Step 18.

NO : Repair it. Then go to Step 20.

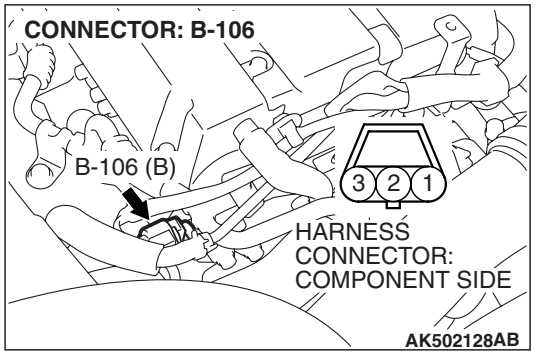

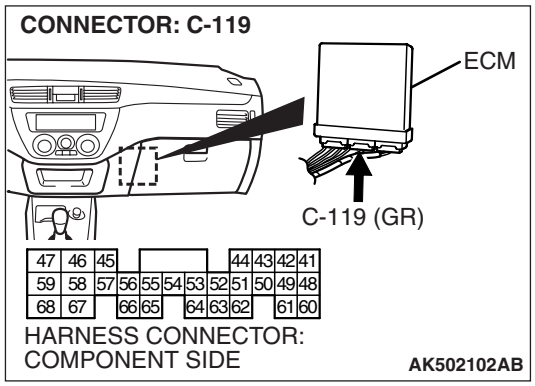

STEP 18. Check for harness damage between exhaust camshaft position sensor connector B-106 (terminal No. 2) and ECM connector C-119 (terminal No. 50).

Q: Is the harness wire in good condition?

YES : Go to Step 19.

NO : Repair it. Then go to Step 20.

STEP 19. Check the exhaust camshaft position sensing cylinder.

Q: Is the exhaust camshaft position sensing cylinder in a good condition?

YES : Replace the exhaust camshaft position sensor. Then go to Step 20.

NO : Repair it. Then go to Step 20.

STEP 20. Test the OBD-II drive cycle.

(1) Carry out a test drive with the drive cycle pattern. Refer to GROUP 13A, Diagnostic Function –OBD-II Drive Cycle – Pattern 23 P.13A-12.

(2) Check the diagnostic trouble code (DTC).

Q: Is DTC P0340 set?

YES : Retry the troubleshooting.

NO : The inspection is complete.

DTC P0365: Intake Camshaft Position Sensor Circuit

Intake Camshaft Position Sensor Circuit

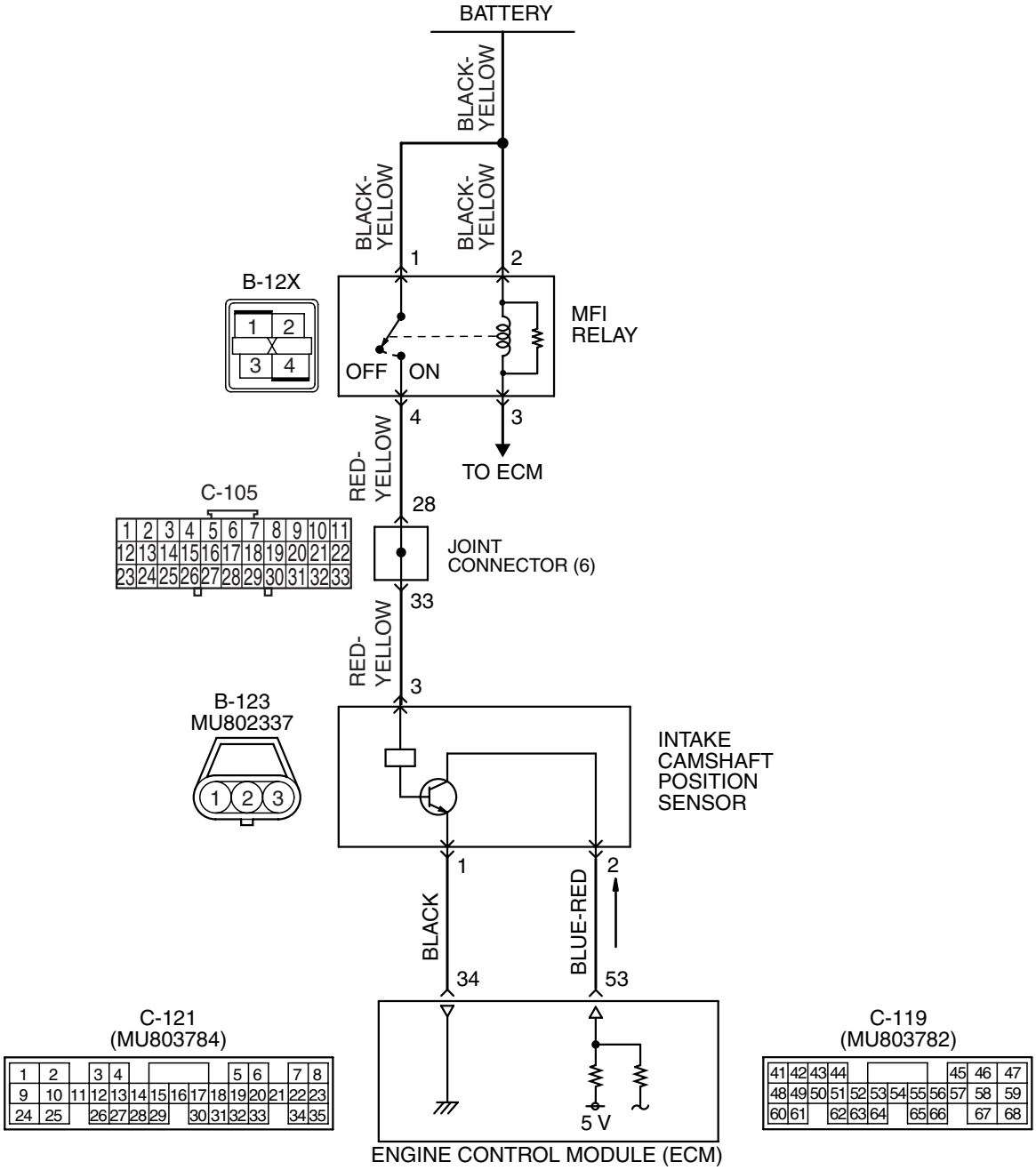

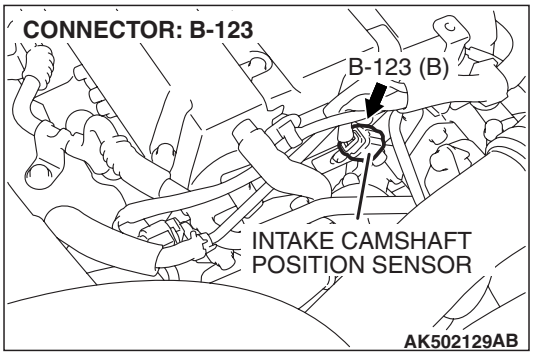

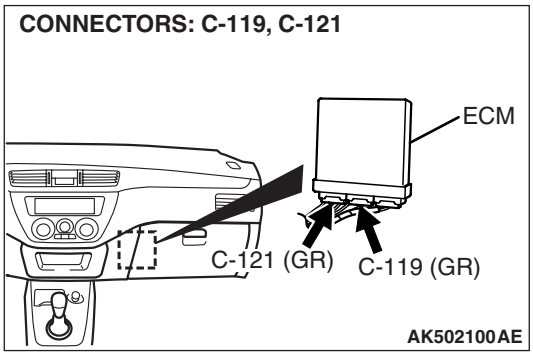

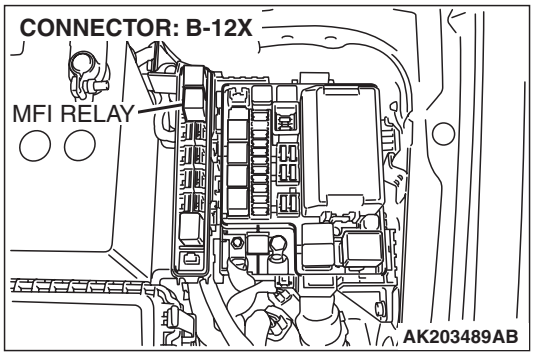

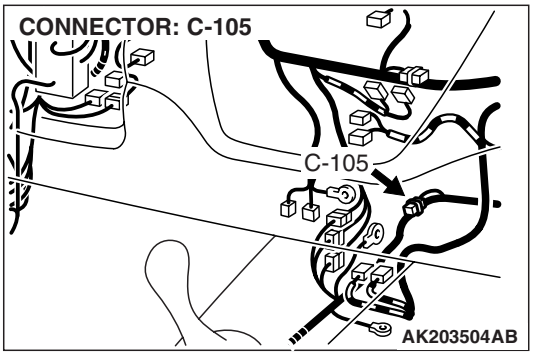

CIRCUIT OPERATION

- The intake camshaft position sensor power is supplied from the MFI relay (terminal No. 4).
- Terminal No. 1 of the intake camshaft position sensor is grounded with ECM (terminal No. 34).
- A 5-volt voltage is applied on the intake camshaft position sensor output terminal (terminal No. 2) from the ECM (terminal No. 53). The intake camshaft position sensor generates a pulse signal when the output terminal is opened and grounded.

TECHNICAL DESCRIPTION

- The intake camshaft position sensor functions to detect the top dead center position of the number 1 cylinder and to convert that data to pulse signals that are input to the ECM.
- When the engine is running, the intake camshaft position sensor outputs a pulse signal.
- The ECM checks whether pulse signal is input while the engine is cranking.

DESCRIPTIONS OF MONITOR METHODS

- Intake camshaft position sensor signal does not change.
- Intake camshaft position sensor signal is not normal pattern.

MONITOR EXECUTION

- Continuous

MONITOR EXECUTION CONDITIONS (Other monitor and Sensor)

Other Monitor (There is no temporary DTC stored in memory for the item monitored below)

- Not applicable

Sensor (The sensor below is determined to be normal)

- Not applicable

DTC SET CONDITIONS <Range/Performance problem-alignment>

Logic Flow Chart

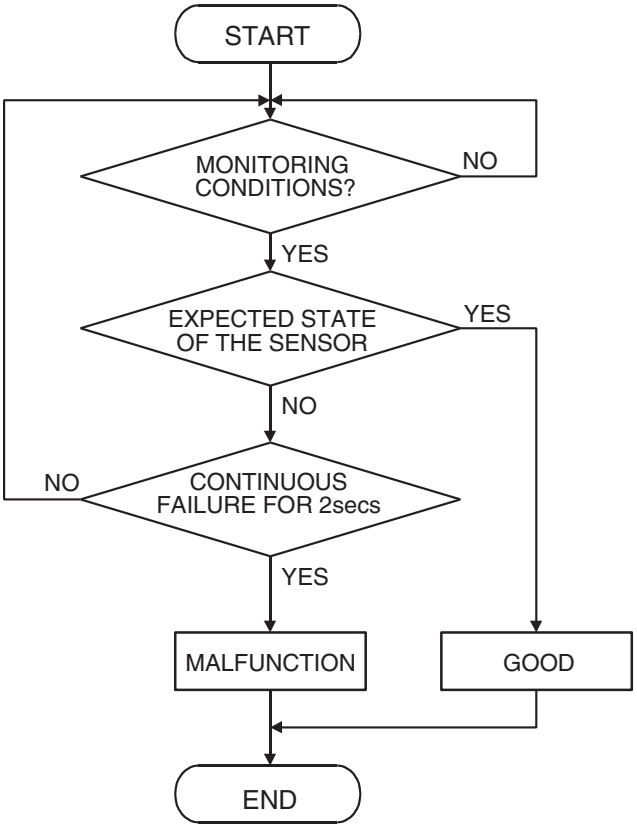

AK301447

Check Condition

- Engine speed is higher than 50 r/min.

Judgment Criterion

- Intake camshaft position sensor output voltage has not changed (no pulse signal is input) for 2 seconds.

DTC SET CONDITIONS <Circuit continuity>

LOGIC FLOW CHART

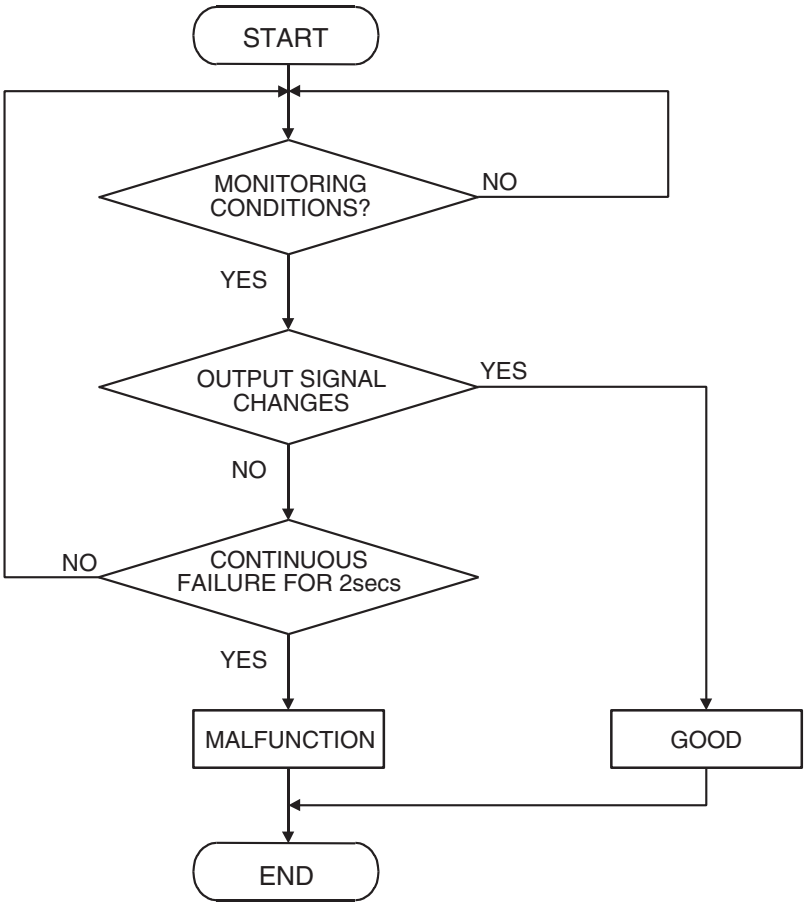

AK301448

Check Condition

- Engine speed is higher than 50 r/min.

Judgment Criterion

- Normal signal pattern has not been input for cylinder identification from the crankshaft position sensor signal and intake camshaft position sensor signal for 2 seconds.

OBD-II DRIVE CYCLE PATTERN

Refer to, Diagnostic Function –OBD-II Drive Cycle – Pattern 23 P.13A-12.

TROUBLESHOOTING HINTS (The most likely causes for this code to be set are:)

- Intake camshaft position sensor failed.
- Open or shorted intake camshaft position sensor circuit, harness damage, or connector damage.
- ECM failed.

DIAGNOSIS

Required Special Tool:

- MB991709: Test Harness Set

STEP 1. Using the oscilloscope, check the intake camshaft position sensor.

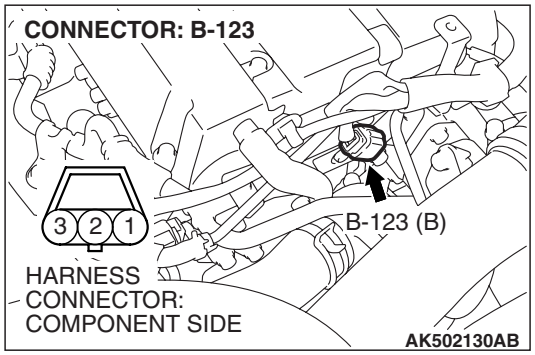

(1) Disconnect the intake camshaft position sensor connector B-106, and connect test harness special tool (MB991709) in between. (All terminals should be connected.)

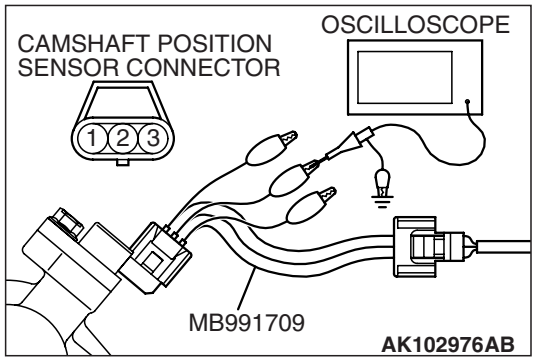

(2) Connect the oscilloscope probe to the intake camshaft position sensor side connector terminal No. 2.

NOTE: When measuring with the ECM side connector, connect an oscilloscope probe to terminal No. 53.

(3) Start the engine and run at idle.

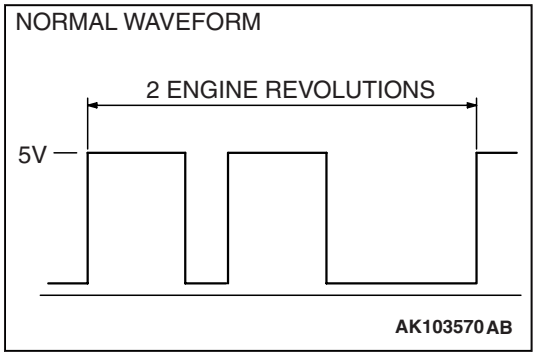

(4) Check the waveform.
- The waveform should show a pattern similar to the illustration.

(5) Turn the ignition switch to the "LOCK" (OFF) position.

Q: Is the waveform normal?

YES : Go to Step 2..
NO : Go to Step 4.

STEP 2. Check harness connector B-123 at intake camshaft position sensor for damage.

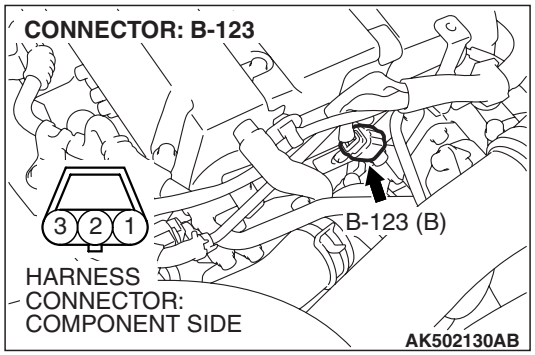

Q: Is the harness connector in good condition?

YES : Go to Step 3.
NO : Repair or replace it. Refer to GROUP 00E, Harness Connector Inspection P.00E-2. Then go to Step 20.

STEP 3. Check the trouble symptoms.

(1) Carry out a test drive with the drive cycle pattern. Refer to GROUP 13A, Diagnostic Function –OBD-II Drive Cycle – Pattern 23 P.13A-12.

(2) Check the diagnostic trouble code (DTC).

Q: Is DTC P0365 set?

YES : Replace the ECM. Then go to Step 20.

NO : It can be assumed that this malfunction is intermittent. Refer to GROUP 00, How to Use Troubleshooting/Inspection Service Points –How to Cope with Intermittent Malfunctions P.00-13.

STEP 4. Check harness connector B-123 at intake camshaft position sensor for damage.

Q: Is the harness connector in good condition?

YES : Go to Step 5.

NO : Repair or replace it. Refer to GROUP 00E, Harness Connector Inspection P.00E-2. Then go to Step 20.

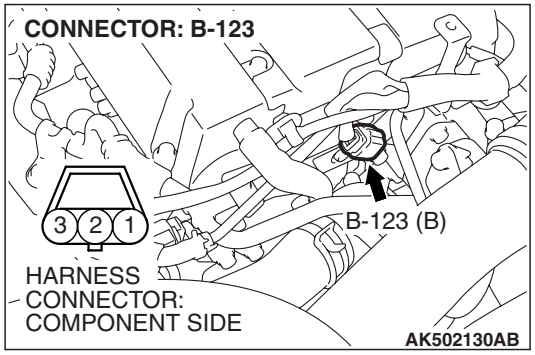

STEP 5. Measure the sensor supply voltage at intake camshaft position sensor connector B-123.

(1) Disconnect connector B-123 and measure at the harness side.

(2) Turn the ignition switch to the "ON" position.

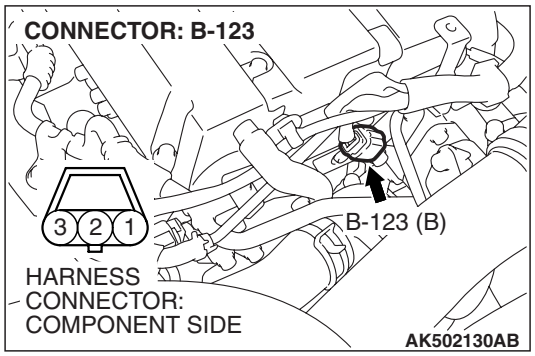

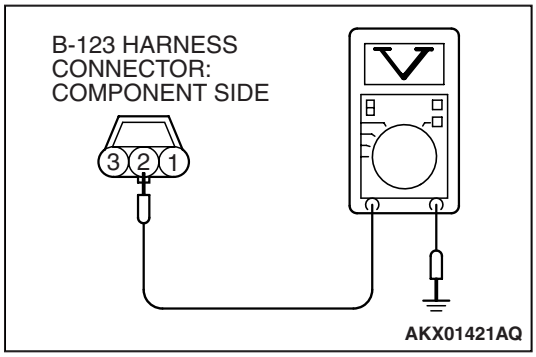

(3) Measure the voltage between terminal No. 2 and ground.
- Voltage should be between 4.8 and 5.2 volts.

(4) Turn the ignition switch to the "LOCK" (OFF) position.

Q: Is the measured voltage between 4.8 and 5.2 volts?

YES : Go to Step 10.

NO : Go to Step 6.

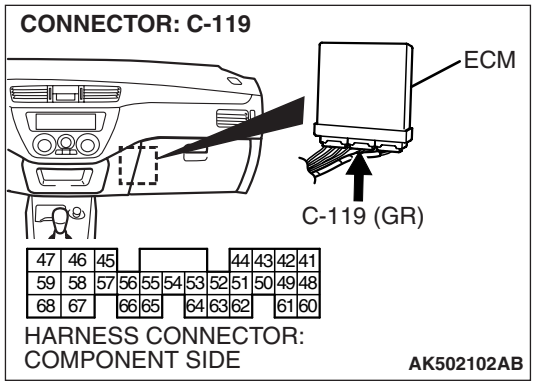

STEP 6. Measure the sensor supply voltage at ECM connector C-119 by backprobing.

(1) Do not disconnect the ECM connector C-119.
(2) Disconnect the intake camshaft position sensor connector B-123.
(3) Turn the ignition switch to the "ON" position.

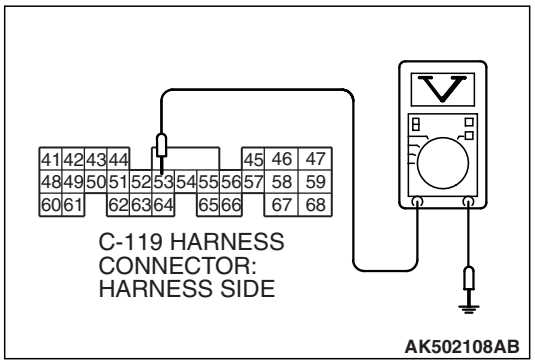

(4) Measure the voltage between terminal No. 53 and ground by backprobing.
- Voltage should be between 4.8 and 5.2 volts.

(5) Turn the ignition switch to the "LOCK" (OFF) position.

Q: Is the measured voltage between 4.8 and 5.2 volts?

YES : Go to Step 7.
NO : Go to Step 8.

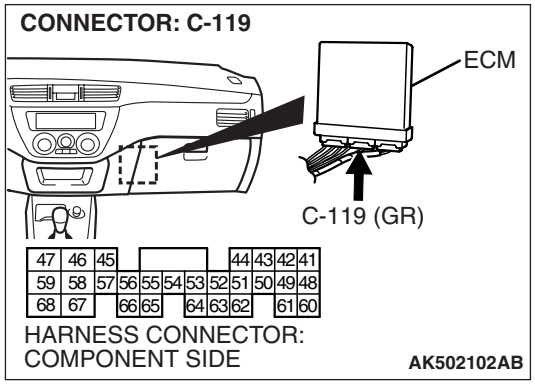

STEP 7. Check harness connector C-119 at ECM for damage.

Q: Is the harness connector in good condition?

YES : Repair harness wire between intake camshaft position sensor connector B-123 (terminal No. 2) and ECM connector C-119 (terminal No. 53) because of open circuit. Then go to Step 20.
NO : Repair or replace it. Refer to GROUP 00E, Harness Connector Inspection P.00E-2. Then go to Step 20.

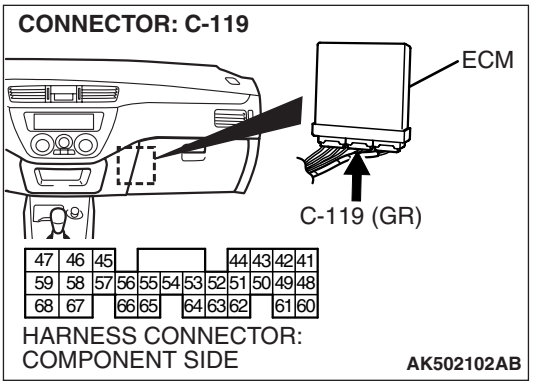

STEP 8. Check harness connector C-119 at ECM for damage.

Q: Is the harness connector in good condition?

YES : Go to Step 9.

NO : Repair or replace it. Refer to GROUP 00E, Harness Connector Inspection P.00E-2. Then go to Step 20.

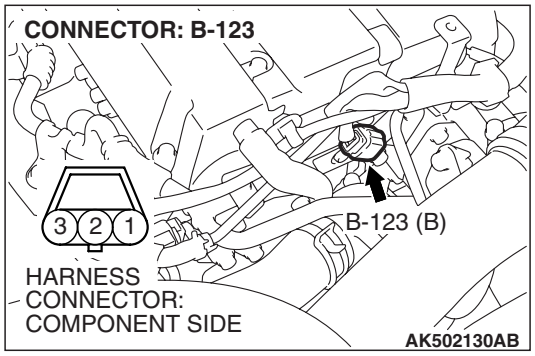

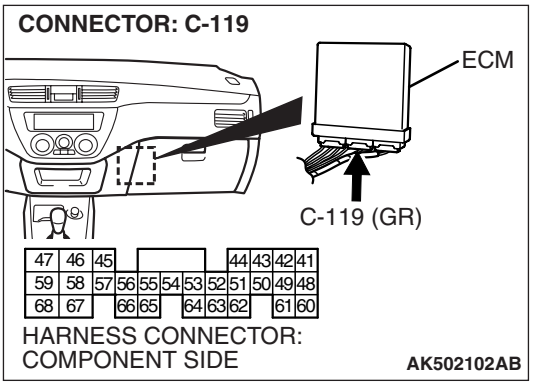

STEP 9. Check for short circuit to ground between intake camshaft position sensor connector B-123 (terminal No. 2) and ECM connector C-119 (terminal No. 53).

Q: Is the harness wire in good condition?

YES : Replace the ECM. Then go to Step 20.

NO : Repair it. Then go to Step 20.

STEP 10. Measure the power supply voltage at intake camshaft position sensor connector B-123.

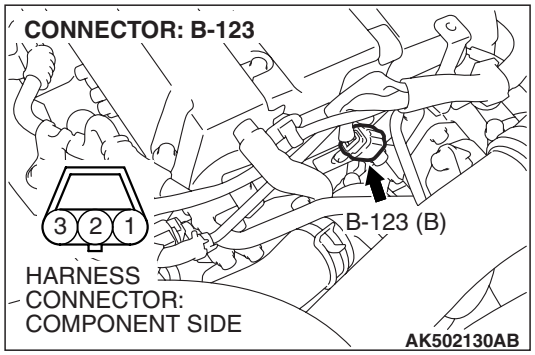

(1) Disconnect connector B-123 and measure at the harness side.
(2) Turn the ignition switch to the "ON" position.

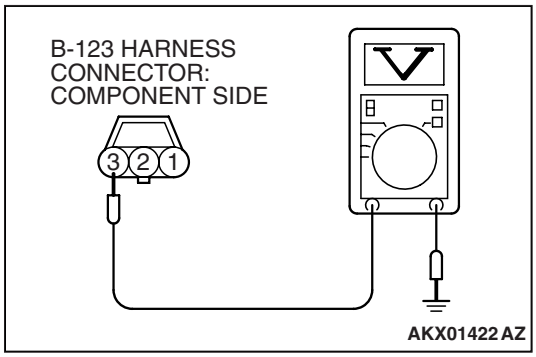

(3) Measure the voltage between terminal No. 3 and ground.
- Voltage should be battery positive voltage.

(4) Turn the ignition switch to the "LOCK" (OFF) position.

Q: Is battery positive voltage (approximately 12 volts) present?

YES : Go to Step 12.
NO : Go to Step 11.

STEP 11. Check harness connector B-12X at MFI relay for damage.

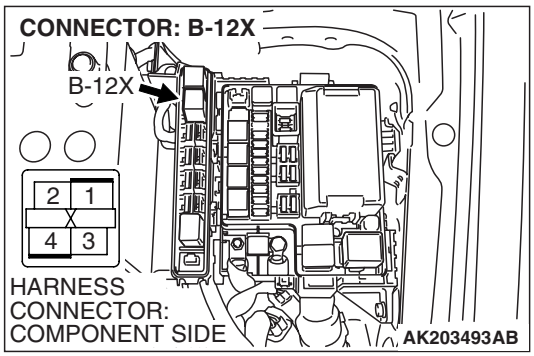

NOTE: Check harness after checking intermediate connector C-105. If the intermediate connector is damaged, repair or replace it. Refer to GROUP 00E, Harness Connector Inspection P.00E-2. Then go to Step 20.

Q: Is the harness connector in good condition?

YES : Repair harness wire between MFI relay connector B-12X (terminal No. 4) and intake camshaft position sensor connector B-123 (terminal No. 3) because of open circuit or short circuit to ground. Then go to Step 20.
NO : Repair or replace it. Refer to GROUP 00E, Harness Connector Inspection P.00E-2. Then go to Step 20.

STEP 12. Check for continuity at intake camshaft position sensor connector B-123.

(1) Disconnect connector B-123 and measure at the harness side.

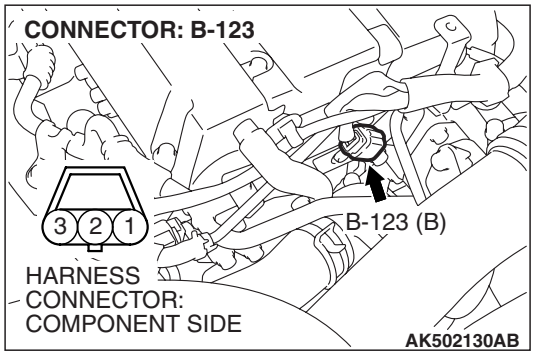

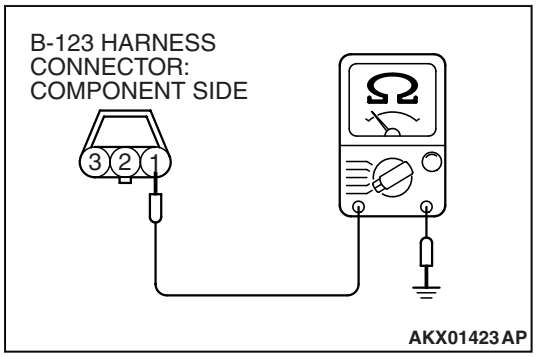

(2) Check for the continuity between terminal No. 1 and ground.
- Should be less than 2 ohms.

Q: Does continuity exist?

YES : Go to Step 15.
NO : Go to Step 13.

STEP 13. Check harness connector C-121 at ECM for damage.

Q: Is the harness connector in good condition?

YES : Go to Step 14.
NO : Repair or replace it. Refer to GROUP 00E, Harness Connector Inspection P.00E-2. Then go to Step 20.

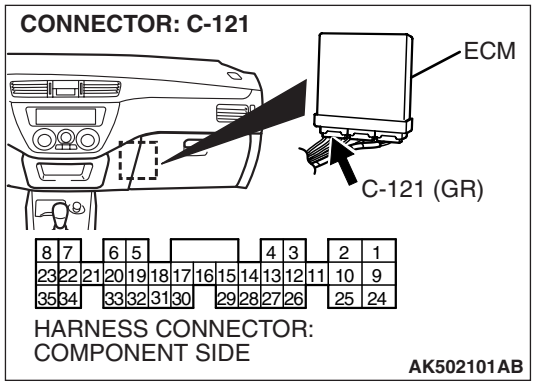

STEP 14. Check for open circuit and harness damage between intake camshaft position sensor connector B-123 (terminal No. 1) and ECM connector C-121 (terminal No. 34).

Q: Is the harness wire in good condition?

YES : Replace the ECM. Then go to Step 20.

NO : Repair it. Then go to Step 20.

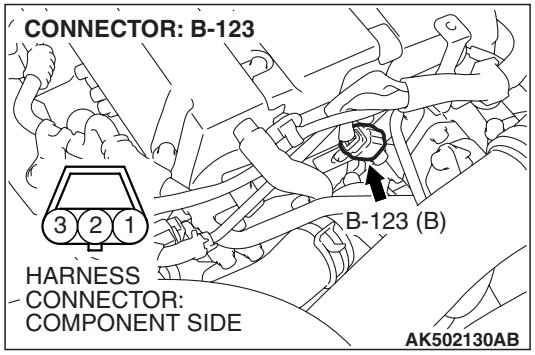

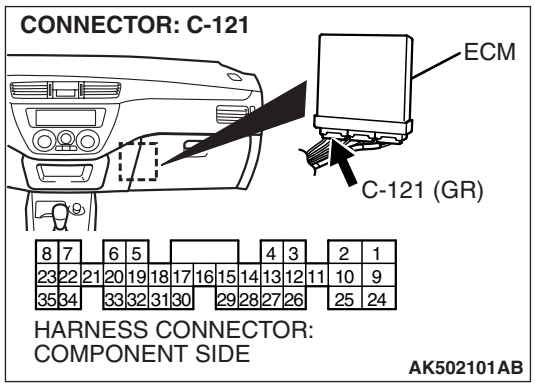

STEP 15. Check harness connector B-12X at the MFI relay for damage.

Q: Is the harness connector in good condition?

YES : Go to Step 16.

NO : Repair or replace it. Refer to GROUP 00E, Harness Connector Inspection P.00E-2. Then go to Step 20.

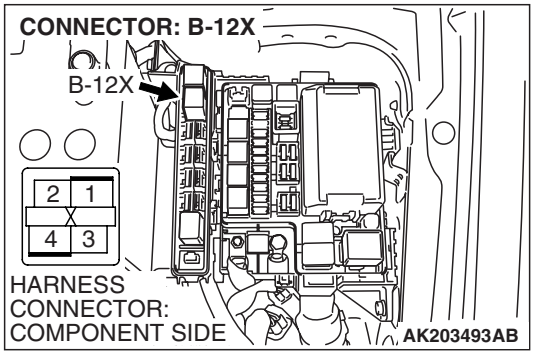

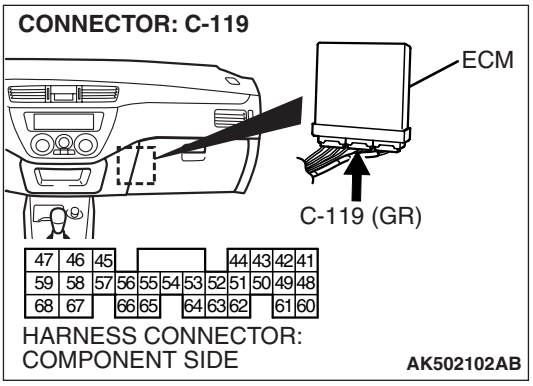

STEP 16. Check harness connector C-119 at ECM for damage.

Q: Is the harness connector in good condition?

YES : Go to Step 17.

NO : Repair or replace it. Refer to GROUP 00E, Harness Connector Inspection P.00E-2. Then go to Step 20.

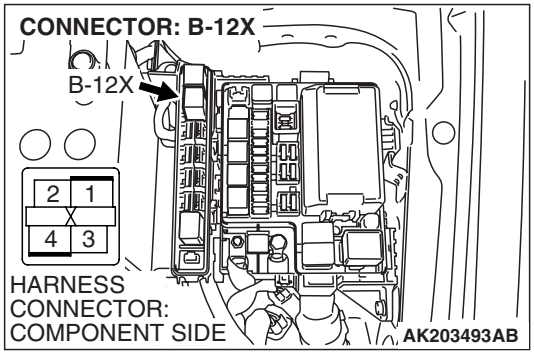

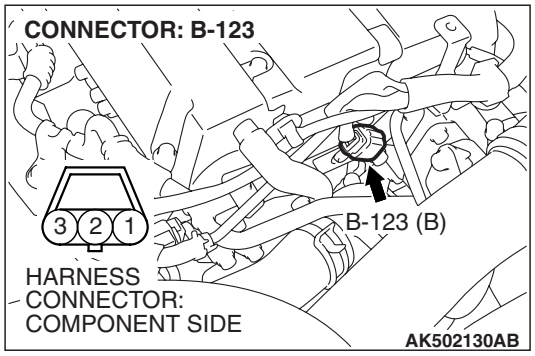

STEP 17. Check for harness damage between MFI relay connector B-12X (terminal No. 4) and intake camshaft position sensor connector B-123 (terminal No. 3).

Q: Is the harness wire in good condition?

YES : Go to Step 18.

NO : Repair it. Then go to Step 20.

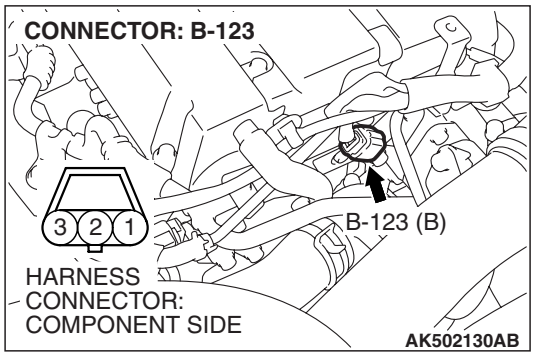

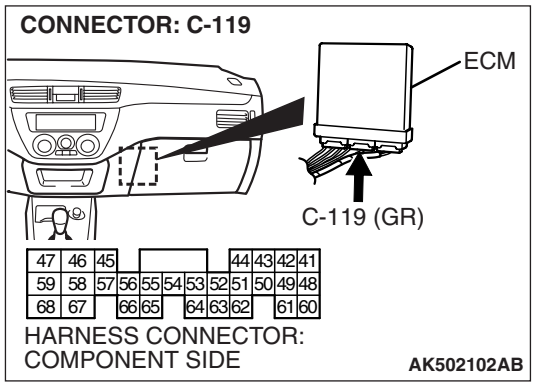

STEP 18. Check for harness damage between intake camshaft position sensor connector B-123 (terminal No. 2) and ECM connector C-119 (terminal No. 53).

Q: Is the harness wire in good condition?

YES : Go to Step 19.

NO : Repair it. Then go to Step 20.

STEP 19. Check the intake camshaft position sensing cylinder.

Q: Is the intake camshaft position sensing cylinder in a good condition?

YES : Replace the intake camshaft position sensor. Then go to Step 20.

NO : Repair it. Then go to Step 20.

STEP 20. Test the OBD-II drive cycle.

(1) Carry out a test drive with the drive cycle pattern. Refer to GROUP 13A, Diagnostic Function –OBD-II Drive Cycle – Pattern 23 P.13A-12.

(2) Check the diagnostic trouble code (DTC).

Q: Is DTC P0365 set?

YES : Retry the troubleshooting.

NO : The inspection is complete.

DTC P0401: EGR Flow Insufficient Detected

TECHNICAL DESCRIPTION

- When the EGR vacuum regulator solenoid valve switches from ‘‘OFF’’ to ‘‘ON’’ while the engine is running, EGR gas flows.
- The ECM checks how the EGR gas flow signal changes.

DESCRIPTIONS OF MONITOR METHODS

- Small manifold pressure change during exhaust gas recirculation (EGR) operation from closed to open.

MONITOR EXECUTION

- Continuous

MONITOR EXECUTION CONDITIONS (Other monitor and Sensor)

Other Monitor (There is no temporary DTC stored in memory for the item monitored below.)

- EGR vacuum regulator solenoid valve monitor

Sensor (The sensor below is determined to be normal.)

- Volume airflow sensor
- Engine coolant temperature sensor
- Intake air temperature sensor
- Barometric pressure sensor
- Throttle position sensor
- Manifold absolute pressure sensor

DTC SET CONDITIONS

Logic Flow Chart

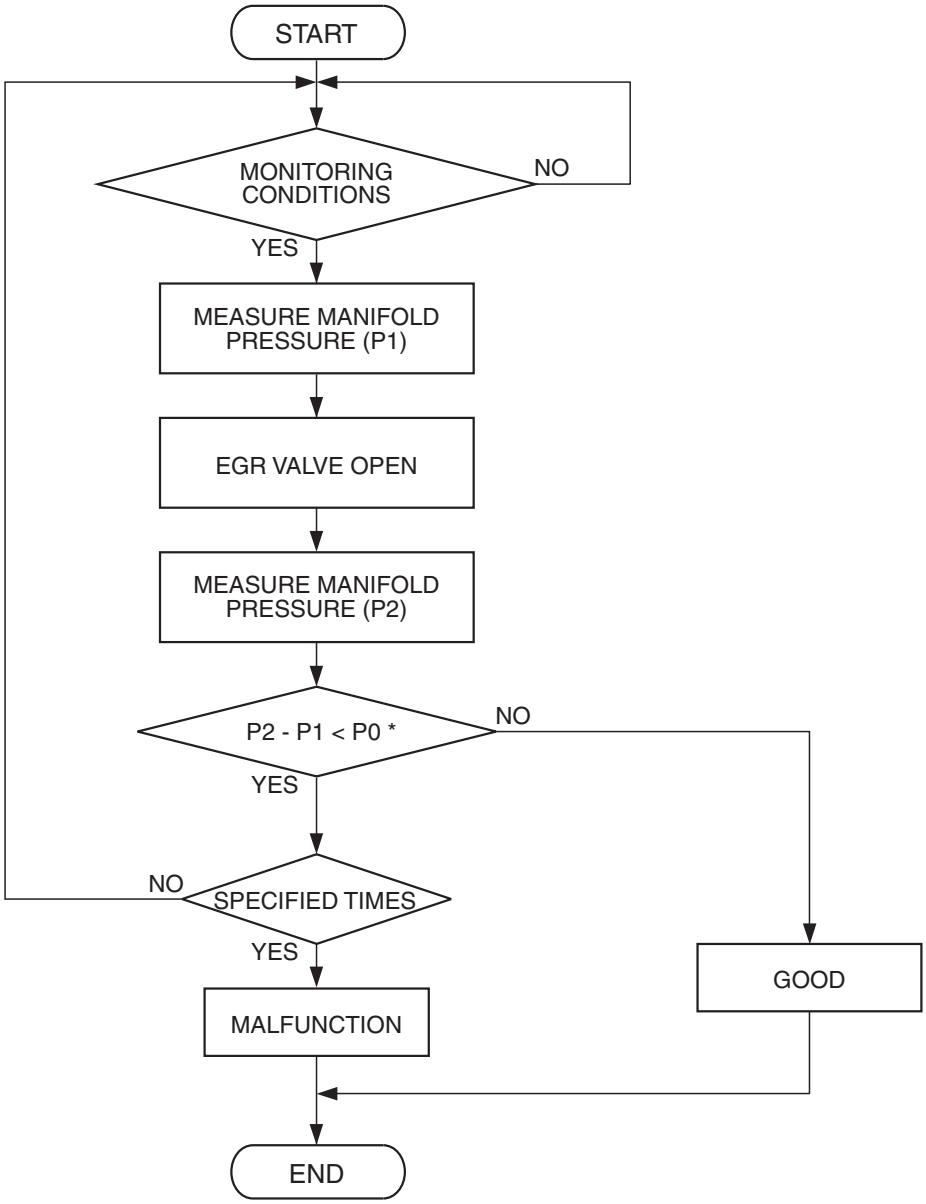

P0 : THRESHOLD VALUE

AK204016

Check Conditions

- At least 20 seconds have passed since the last monitor was completed.
- Engine coolant temperature is higher than 76° C (169° F).
- Engine speed is at between 1,000 and 2,000 r/min.
- Intake air temperature is higher than –10° C (14° F)
- Barometric pressure is higher than 76 kPa (22.4 in. Hg).
- Vehicle speed is 1.5 km/h (1.0 mph) or more.
- At least 90 seconds have passed since manifold absolute pressure sensor output voltage fluctuated 1.5 volts or more.
- The throttle valve is closed.

TSB Revision

- Volumetric efficiency is lower than 20 percent.
- While fual being shut off.
- The ECM monitors for this condition for 3 cycles of 2 seconds each during the drive cycle.

Judgment Criterion

- When intake manifold pressure fluctuations width is lower than 2.9 kPa (0.86 in. Hg). When the EGR vacuum regulator solenoid valve is turned ON.

OBD-II DRIVE CYCLE PATTERN

Refer to Diagnostic Function –OBD-II Drive Cycle – Pattern 3 P.13A-12.

TROUBLESHOOTING HINTS (The most likely causes for this code to be set are:)

- EGR valve does not open.
- EGR control vacuum is too low.
- EGR vacuum regulator solenoid valve failed.
- Open or shorted EGR vacuum regulator solenoid valve circuit, or connector damage.
- Manifold absolute pressure sensor failed.
- ECM failed.

DIAGNOSIS

Required Special Tools:

- MB991958: Scan Tool (M.U.T.-III Sub Assembly)
  - MB991824: V.C.I
  - MB991827: USB Cable
  - MB991911: Main Harness B

STEP 1. Check the EGR system.

Refer to GROUP 17, Emission Control System –Exhaust Gas Recirculation (EGR) System –EGR System Check 3 P.17-17.

Q: Are there any abnormalities?

YES : Repair it. Then go to Step 3.
NO : Go to Step 2.

STEP 2. Using scan tool MB991958, check data list item 95: Manifold Absolute Pressure Sensor.

⚠ CAUTION

To prevent damage to scan tool MB991958, always turn the ignition switch to the "LOCK" (OFF) position before connecting or disconnecting scan tool MB991958.

(1) Connect scan tool MB991958 to the data link connector.
(2) Start the engine and run at idle.
(3) Set scan tool MB991958 to the data reading mode for item 95, Manifold Absolute Pressure Sensor.
(4) Warm up the engine to normal operating temperature: 80° C to 95° C (176° F to 203° F).
  - Should be between 54 – 68 kPa (15.9 – 20.0 in.Hg) at engine idling.
(5) Turn the ignition switch to the "LOCK" (OFF) position.

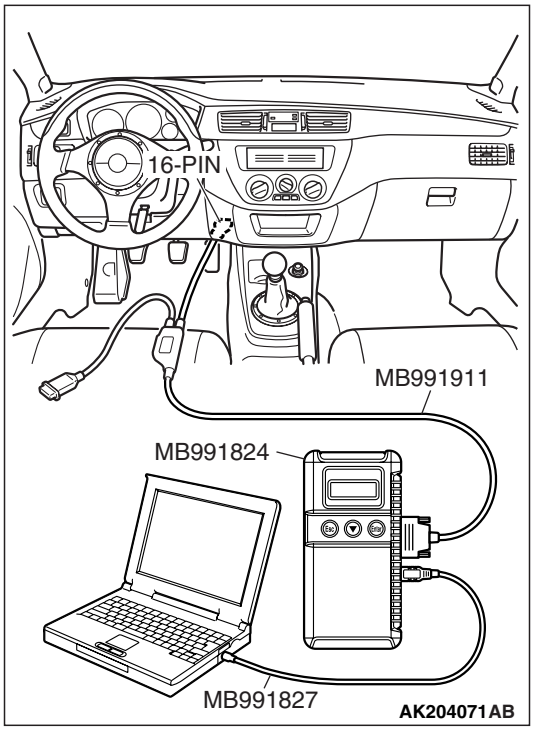

Q: Is the sensor operating properly?

YES : Clean the EGR valve and EGR passage. Then go to step 3.
NO : Refer to DTC P0106 –Manifold Absolute Pressure Sensor Circuit Range/Performance Problem P.13A-107, DTC P0107 –Manifold Absolute Pressure Sensor Circuit Low Input P.13A-116, DTC P0108 – Manifold Absolute Pressure Sensor Circuit High Input P.13A-129.

STEP 3. Test the OBD-II drive cycle.

(1) Carry out a test drive with the drive cycle pattern. Refer to GROUP 13A, Diagnostic Function –OBD-II Drive Cycle – Pattern 3 P.13A-12.

(2) Check the diagnostic trouble code (DTC).

Q: Is DTC P0401 set?

YES : Retry the troubleshooting.

NO : The inspection is complete.

DTC P0403: EGR Control Circuit

EGR Vacuum Regulator Solenoid Valve Circuit

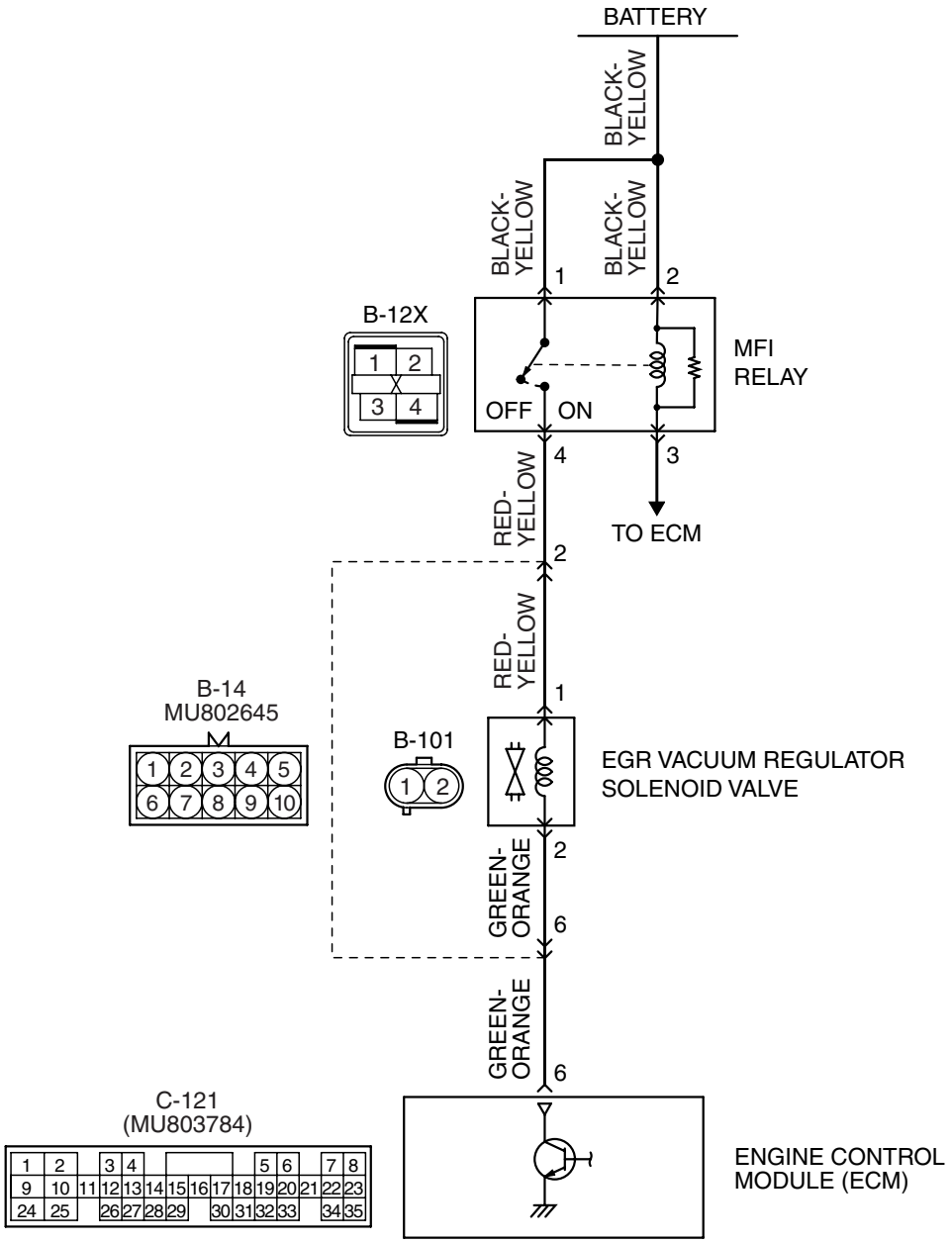

TSB Revision

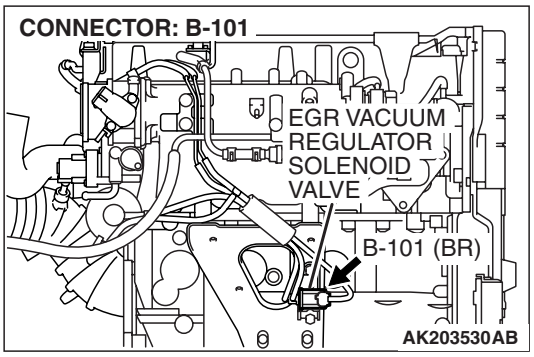

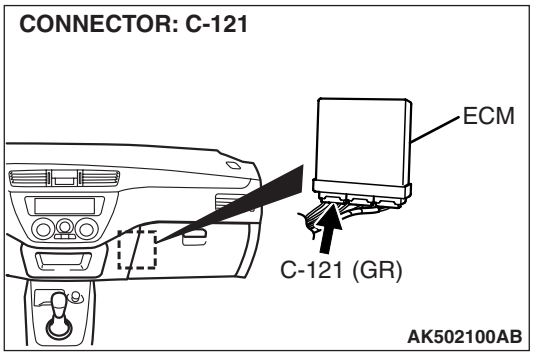

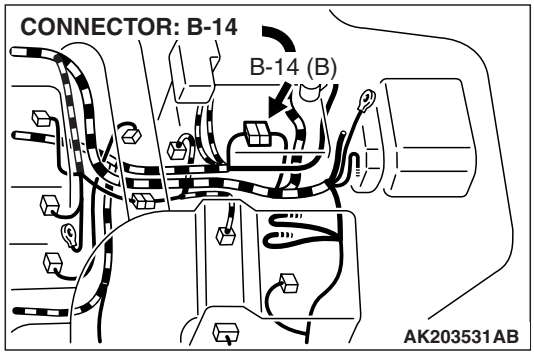

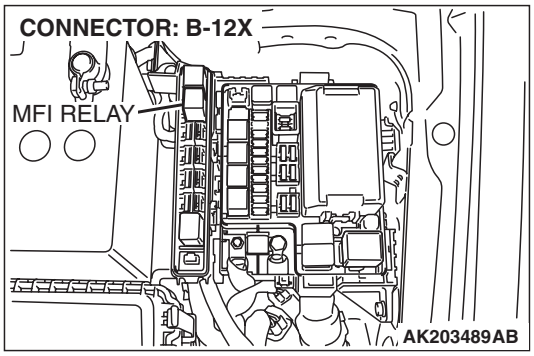

CIRCUIT OPERATION

- The EGR vacuum regulator solenoid valve power is supplied from the MFI relay (terminal No. 4).
- The ECM controls the EGR vacuum regulator solenoid valve ground by turning the power transistor in the ECM "ON" and "OFF".

TECHNICAL DESCRIPTION

- To judge if there is open circuit in the EGR vacuum regulator solenoid valve drive circuit, ECM measures the surge voltage of the EGR vacuum regulator solenoid valve coil.
- The ECM drives the EGR vacuum regulator solenoid valve. After the solenoid is turned off, the ECM will check if the solenoid coil produces a surge voltage of 2 volts or more.

DESCRIPTIONS OF MONITOR METHODS

- Off-surge does not occur after solenoid is operated on to off.

MONITOR EXECUTION

- Continuous

MONITOR EXECUTION CONDITIONS (Other monitor and Sensor)

Other Monitor (There is no temporary DTC stored in memory for the item monitored below)

- Not applicable

Sensor (The sensor below is determined to be normal)

- Not applicable

DTC SET CONDITIONS

Logic Flow Chart

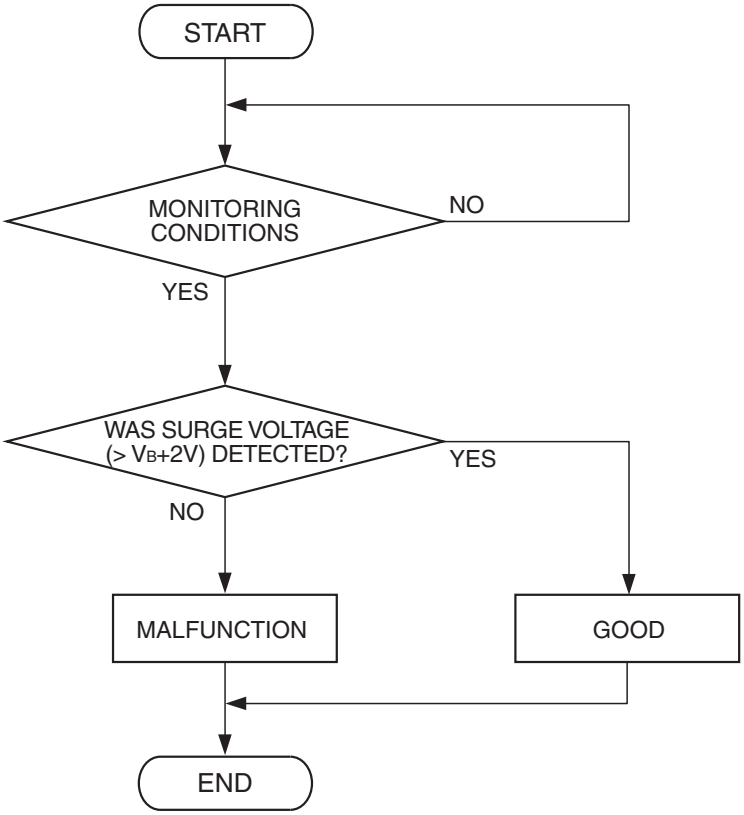

AK204017

Check Conditions

- Engine is being cranked.
- Battery positive voltage is at between 10 and 16.5 volts.

Judgment Criteria

- The EGR vacuum regulator solenoid valve coil surge voltage (battery positive voltage +2 volts) is not detected for 0.2 second.
- The ECM monitors for this condition once during the drive cycle.

Check Conditions

- Battery positive voltage is at between 10 and 16.5 volts.
- ON duty cycle of the EGR vacuum regulator solenoid valve is between 10 and 90 percent.
- ON duty cycle of the evaporative emission purge solenoid is 0 percent.
- Evaporative emission ventilation solenoid is OFF.
- More than 1 second has elapsed after the above mentioned conditions have been met.

Judgment Criterion

- The EGR vacuum regulator solenoid valve coil surge voltage (battery positive voltage + 2 volts) is not detected for 1 second. When the EGR vacuum regulator solenoid valve is turned OFF.

OBD-II DRIVE CYCLE PATTERN

Refer to Diagnostic Function –OBD-II Drive Cycle – Pattern 23 P.13A-12.

TROUBLESHOOTING HINTS (The most likely causes for this code to be set are:)

- EGR vacuum regulator solenoid valve failed.
- Open or shorted EGR vacuum regulator solenoid valve circuit, harness damage, or connector damage.
- ECM failed.

DIAGNOSIS

Required Special Tools:

- MB991958: Scan Tool (M.U.T.-III Sub Assembly)
  - MB991824: V.C.I.
  - MB991827: USB Cable
  - MB991911: Main Harness B

STEP 1. Using scan tool MB991958, check actuator test item 10: EGR vacuum regulator solenoid valve.

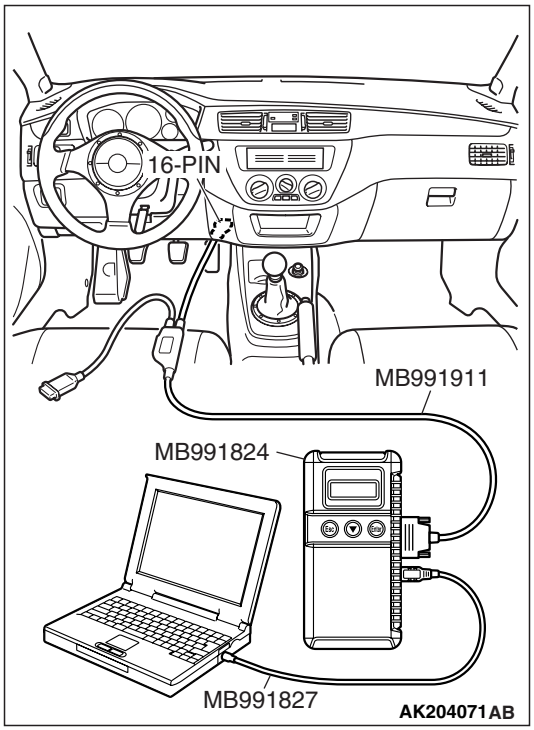

⚠ CAUTION

To prevent damage to scan tool MB991958, always turn the ignition switch to the "LOCK" (OFF) position before connecting or disconnecting scan tool MB991958.

(1) Connect scan tool MB991958 to the data link connector.
(2) Turn the ignition switch to the "ON" position.
(3) Set scan tool MB991958 to the actuator test mode for item 10, EGR vacuum regulator solenoid valve.
  - An operation sound should be heard and vibration should be felt when the EGR vacuum regulator solenoid valve is operated.

(4) Turn the ignition switch to the "LOCK" (OFF) position.

Q: Is the solenoid operating properly?

YES : It can be assumed that this malfunction is intermittent. Refer to GROUP 00, How to Use Troubleshooting/Inspection Service Points –How to Cope with Intermittent Malfunctions P.00-13.

NO : Go to Step 2.

STEP 2. Check harness connector B-101 at the EGR vacuum regulator solenoid valve for damage.

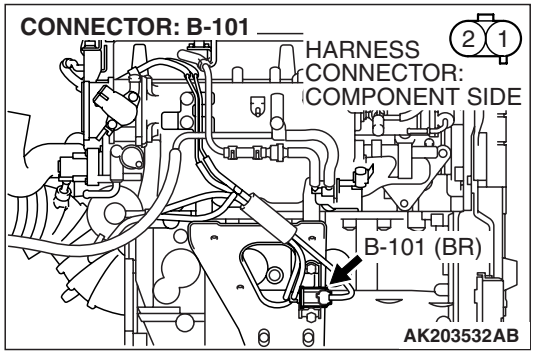

Q: Is the harness connector in good condition?

YES : Go to Step 3.

NO : Repair or replace it. Refer to GROUP 00E, Harness Connector Inspection P.00E-2. Then go to Step 12.

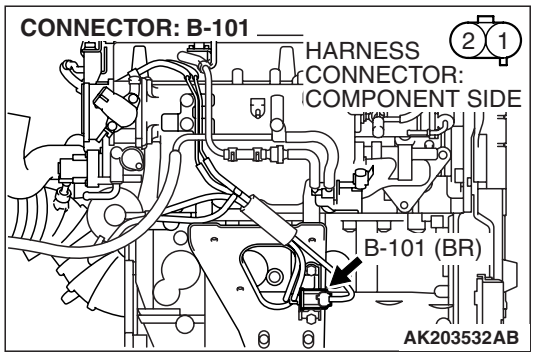

STEP 3 Check the EGR vacuum regulator solenoid valve.

(1) Disconnect the EGR vacuum regulator solenoid valve connector B-101.

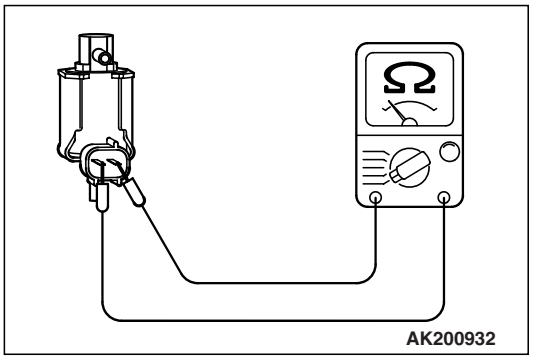

(2) Measure the resistance between EGR vacuum regulator solenoid valve side connector terminal No. 1 and No. 2.

Standard value: 29 – 35 ohms [at 20° C (68° F)]

Q: Is the measured resistance between 29 and 35 ohms [at 20° C (68° F)]?

YES : Go to Step 4.

NO : Replace the EGR vacuum regulator solenoid valve. Then go to Step 12.

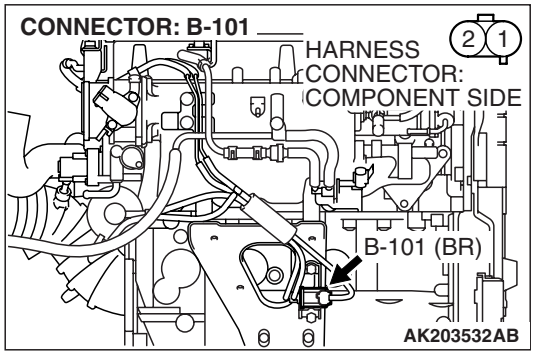

STEP 4. Measure the power supply voltage at EGR vacuum regulator solenoid valve harness side connector B-101.

(1) Disconnect connector B-101 and measure at the harness side.

(2) Turn the ignition switch to the "ON" position.

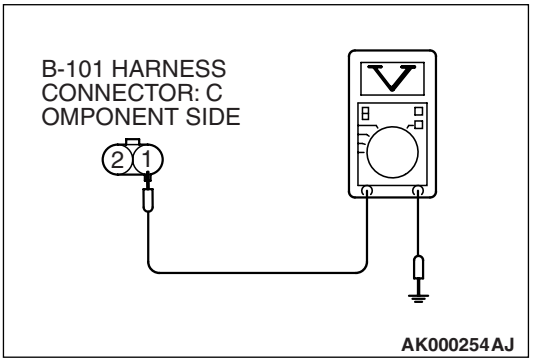

(3) Measure the voltage between terminal No. 1 and ground.
- Voltage should be battery positive voltage.

(4) Turn the ignition switch to the "LOCK" (OFF) position.

Q: Is battery positive voltage (approximately 12 volts) present?

YES : Go to Step 6.

NO : Go to Step 5.

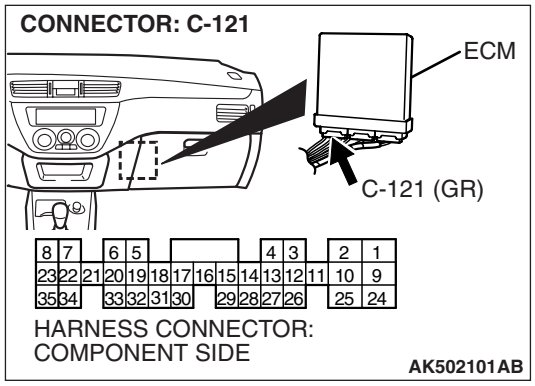

STEP 5. Check harness connector B-12X at MFI relay for damage.

Q: Is the harness connector in good condition?

YES : Check harness connector B-14 at the intermediate connector for damage, and repair or replace as required. Refer to GROUP 00E, Harness Connector Inspection P.00E-2. If the intermediate connector is in good condition, repair harness wire between MFI relay connector B-12X (terminal No. 4) and EGR vacuum regulator solenoid valve connector B-101 (terminal No. 1) because of open circuit or short circuit to ground. Then go to Step 12.

NO : Repair or replace it. Refer to GROUP 00E, Harness Connector Inspection P.00E-2. Then go to Step 12.

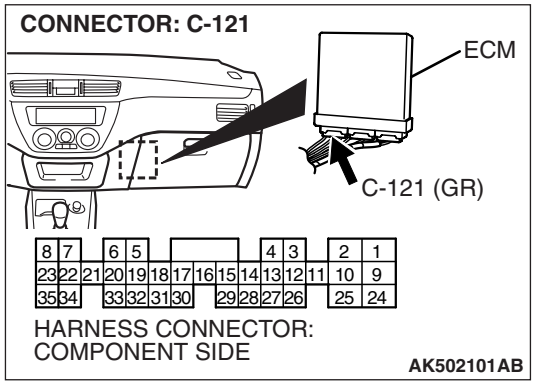

STEP 6. Measure the power supply voltage at ECM connector C-121 by backprobing.

(1) Do not disconnect connector C-121.

(2) Turn the ignition switch to the "ON" position.

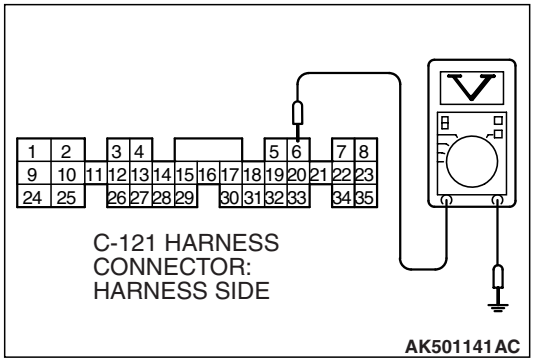

(3) Measure the voltage between terminal No. 6 and ground by backprobing.
- Voltage should be battery positive voltage.

(4) Turn the ignition switch to the "LOCK" (OFF) position.

Q: Is battery positive voltage (approximately 12 volts) present?

YES : Go to Step 9.

NO : Go to Step 7.

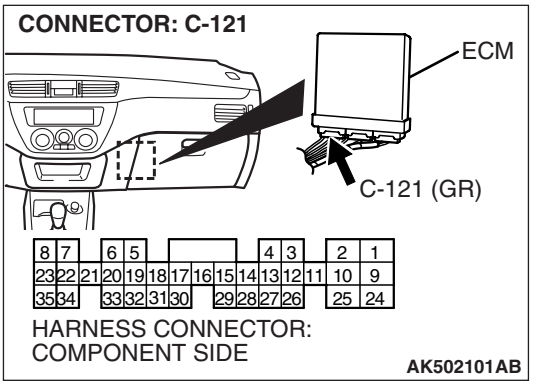

STEP 7. Check harness connector C-121 at ECM for damage.

Q: Is the harness connector in good condition?

YES : Go to Step 8.

NO : Repair or replace it. Refer to GROUP 00E, Harness Connector Inspection P.00E-2. Then go to Step 12.

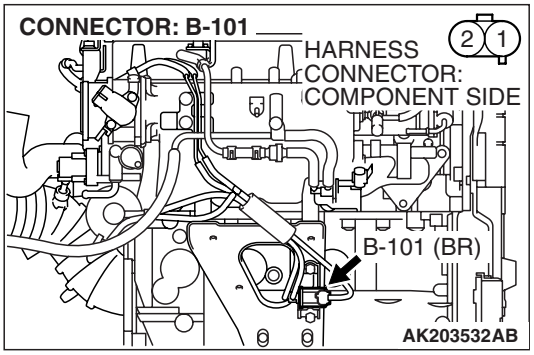

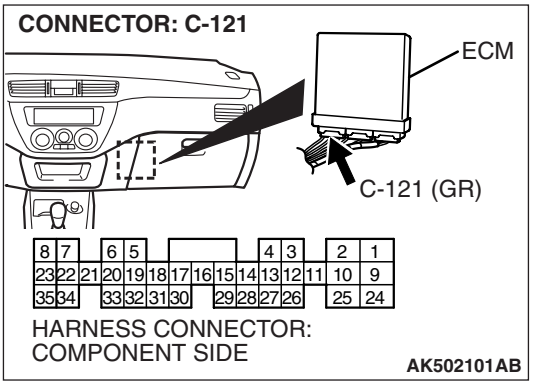

STEP 8. Check for open circuit and short circuit to ground between EGR vacuum regulator solenoid valve connector B-101 (terminal No. 2) and ECM connector C-121 (terminal No. 6).

NOTE: Check harness after checking intermediate connector B-14. If the intermediate connector is damaged, repair or replace it. Refer to GROUP 00E, Harness Connector Inspection P.00E-2. Then go to Step 14.

Q: Is the harness wire in good condition?

YES : Replace the ECM. Then go to Step 12.

NO : Repair it. Then go to Step 12.

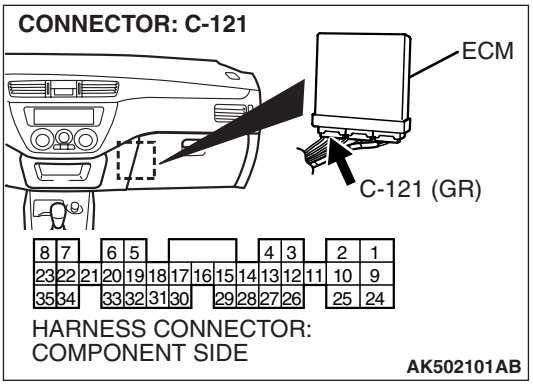

STEP 9. Check harness connector C-121 at ECM for damage.

Q: Is the harness connector in good condition?

YES : Go to Step 10.

NO : Repair or replace it. Refer to GROUP 00E, Harness Connector Inspection P.00E-2. Then go to Step 12.

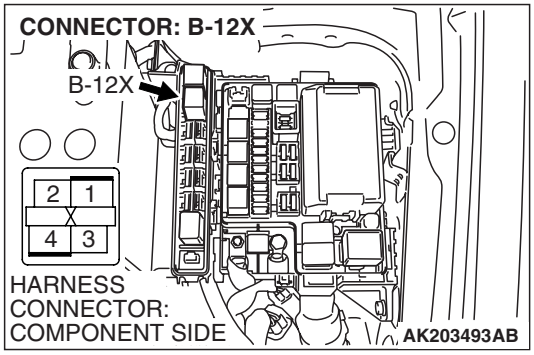

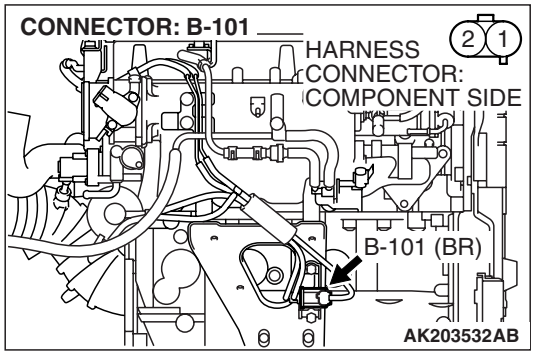

STEP 10. Check for harness damage between MFI relay connector B-12X (terminal No. 4) and EGR vacuum regulator solenoid valve connector B-101 (terminal No. 1).

NOTE: Check harness after checking intermediate connector B-14. If the intermediate connector is damaged, repair or replace it. Refer to GROUP 00E, Harness Connector Inspection P.00E-2. Then go to Step 14.

Q: Is the harness wire in good condition?

YES : Go to Step 11.

NO : Repair it. Then go to Step 12.

STEP 11. Check for harness damage between EGR vacuum regulator solenoid valve connector B-101 (terminal No. 2) and ECM connector C-121 (terminal No. 6).

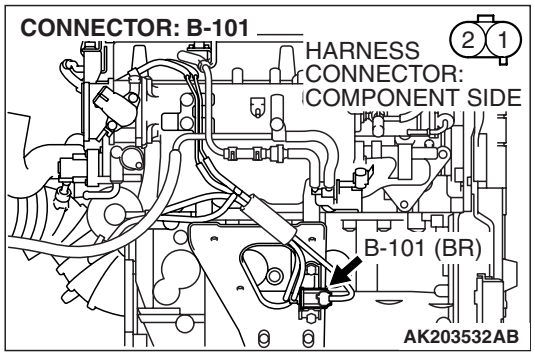

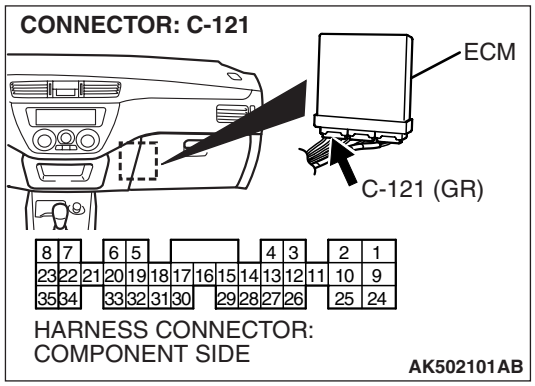

NOTE: Check harness after checking intermediate connector B-14. If the intermediate connector is damaged, repair or replace it. Refer to GROUP 00E, Harness Connector Inspection P.00E-2. Then go to Step 14.

Q: Is the harness wire in good condition?

YES : Replace the ECM. Then go to Step 12.
NO : Repair it. Then go to Step 12.

STEP 12. Test the OBD-II drive cycle.

(1) Carry out a test drive with the drive cycle pattern. Refer to GROUP 13A, Diagnostic Function –OBD-II Drive Cycle – Pattern 23 P.13A-12.
(2) Check the diagnostic trouble code (DTC).

Q: Is DTC P0403 set?

YES : Retry the troubleshooting.
NO : The inspection is complete.

DTC P0420: Catalyst Efficiency Below Threshold

TECHNICAL DESCRIPTION

- The signal from the rear heated oxygen sensor differs from the front heated oxygen sensor. That is because the catalytic converter purifies exhaust gas. When the catalytic converter has deteriorated, the signal from the front heated oxygen sensor becomes similar to the rear heated oxygen sensor.
- The ECM compares the output of the front and rear heated oxygen sensor signals.

DESCRIPTIONS OF MONITOR METHODS

- Front and rear heated oxygen sensor rich/lean switching frequency are nearly equal.

MONITOR EXECUTION

- Continuous

MONITOR EXECUTION CONDITIONS (Other monitor and Sensor)

Other Monitor (There is no temporary DTC stored in memory for the item monitored below)

- Heated oxygen sensor (front) monitor
- Heated oxygen sensor (rear) monitor
- Heated oxygen sensor heater (front) monitor
- Heated oxygen sensor heater (rear) monitor
- Misfire monitor
- Fuel system monitor
- Air/fuel ratio feedback system monitor

Sensor (The sensor below is determined to be normal)

- Volume air flow sensor
- Barometric pressure sensor
- Intake air temperature sensor
- Engine coolant temperature sensor
- Throttle position sensor
- Accelerator position sensor

DTC SET CONDITIONS

Logic Flow Chart

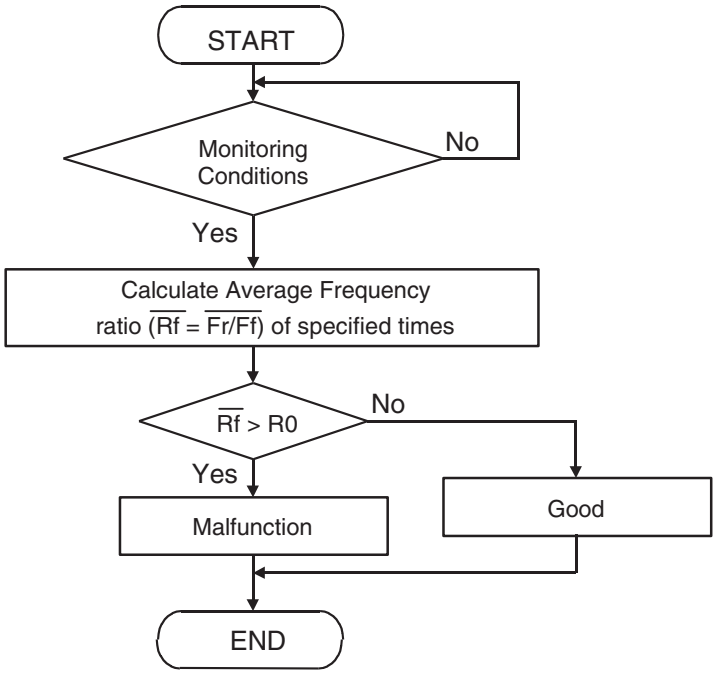

AK200875

TSB Revision

Check Conditions

- Engine speed is lower than 3,500 r/min.
- Volume air flow sensor output frequency is between 94 and 238 Hz.
- The throttle valve is open.
- More than 3 seconds have elapsed after the above mentioned three conditions have been met.
- Intake air temperature is higher than –10° C (14° F).
- Barometric pressure is higher than 76 kPa (22.4 in. Hg).
- Under the closed loop air/fuel ratio control.
- Vehicle speed is 1.5 km/h (1.0 mph) or more.
- Short-term fuel trim is higher than –25 percent and lower than + 25 percent.
- The cumulative volume air flow sensor output frequency is higher than 10,000 Hz.
- The ECM monitors for this condition for 7 cycles of 10 seconds each during the drive cycle.

Judgment Criterion

- The frequency ratio of heated oxygen sensor (rear) and heated oxygen sensor (front) is more than 0.3.

OBD-II DRIVE CYCLE PATTERN

Refer to Diagnostic Function –OBD-II Drive Cycle – Pattern 4 P.13A-12.

TROUBLESHOOTING HINTS (The most likely causes for this code to be set are:)

- Catalytic converter deteriorated.
- Heated oxygen sensor failed.
- Exhaust leak.
- ECM failed.

DIAGNOSIS

Required Special Tools:

- MB991958: Scan Tool (M.U.T.-III Sub Assembly)
  - MB991824: V.C.I.
  - MB991827: USB Cable
  - MB991911: Main Harness B

STEP 1. Check for exhaust leaks.

Q: Are there any abnormalities?

YES : Repair it. Then go to Step 7.
NO : Go to Step 2.

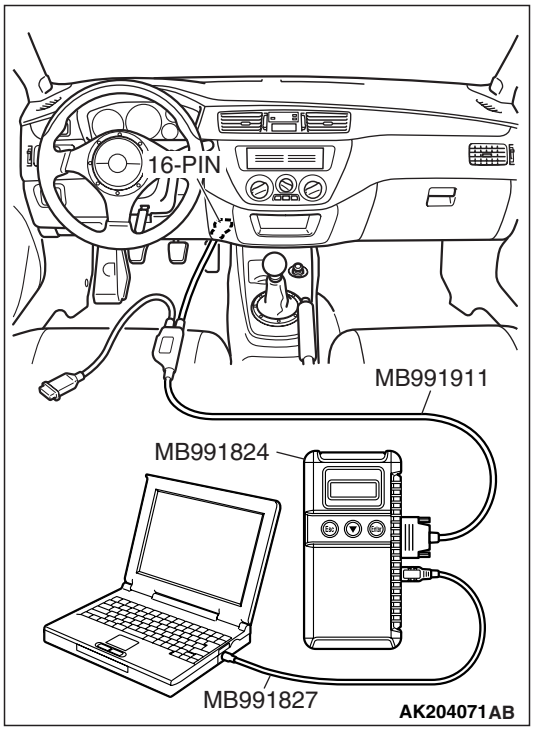

STEP 2. Using scan tool MB991958, check data list item 59: Heated Oxygen Sensor (rear).

⚠ CAUTION

To prevent damage to scan tool MB991958, always turn the ignition switch to the "LOCK" (OFF) position before connecting or disconnecting scan tool MB991958.

(1) Connect scan tool MB991958 to the data link connector.
(2) Start the engine and run at idle.
(3) Set scan tool MB991958 to the data reading mode for item 59, Heated Oxygen Sensor (rear).
  a. Transaxle: 2nd speed
  b. Drive with wide open throttle
  c. Engine: 3,500 r/min or more
  - The output voltage should be between 0.6 and 1.0 volt.
(4) Turn the ignition switch to the "LOCK" (OFF) position.

Q: Is the sensor operating properly?

YES : Go to Step 3.

NO : Refer to, DTC P0136 –Heated Oxygen Sensor Circuit (sensor 2) P.13A-258, DTC P0137 –Heated Oxygen Sensor Circuit Low Voltage (sensor 2) P.13A-269, DTC P0138 –Heated Oxygen Sensor Circuit High Voltage (sensor 2) P.13A-275, DTC P0139 –Heated Oxygen Sensor Circuit Slow Response (sensor 2) P.13A-279, DTC P0140 –Heated Oxygen Sensor Circuit No Activity Detected (sensor 2) P.13A-282.

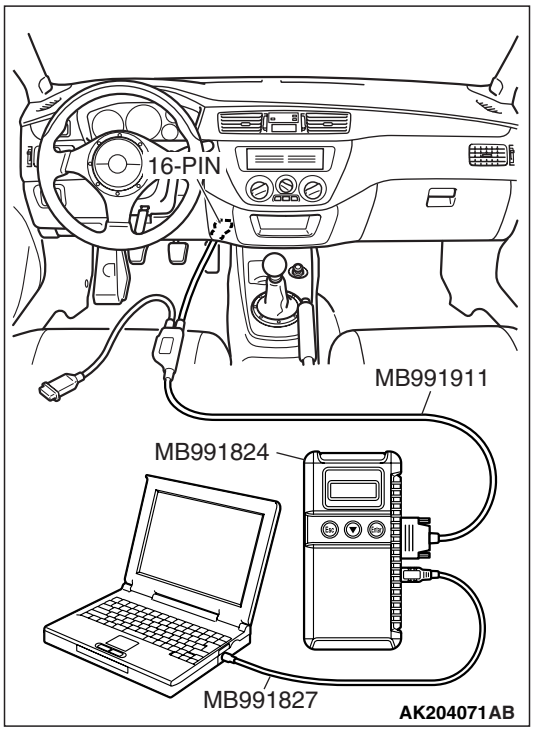

STEP 3. Using scan tool MB991958, check data list item 11: Heated Oxygen Sensor (front).

(1) Start the engine and run at idle.
(2) Set scan tool MB991958 to the data reading mode for item 11, Heated Oxygen Sensor (front).
  - Warm up the engine. When the engine is revved, the output voltage should be 0.6 to 1.0 volt.
(3) Turn the ignition switch to the "LOCK" (OFF) position.

Q: Is the sensor operating properly?

YES : Go to Step 4.

NO : Refer to, DTC P0130 –Heated Oxygen Sensor Circuit (sensor 1) P.13A-216, DTC P0131 –Heated Oxygen Sensor Circuit Low Voltage (sensor 1) P.13A-231, DTC P0132 –Heated Oxygen Sensor Circuit High Voltage (sensor 1) P.13A-238, DTC P0133 –Heated Oxygen Sensor Circuit Slow Response (sensor 1) P.13A-243, DTC P0134 –Heated Oxygen Sensor Circuit No Activity Detected (sensor 1) P.13A-249.

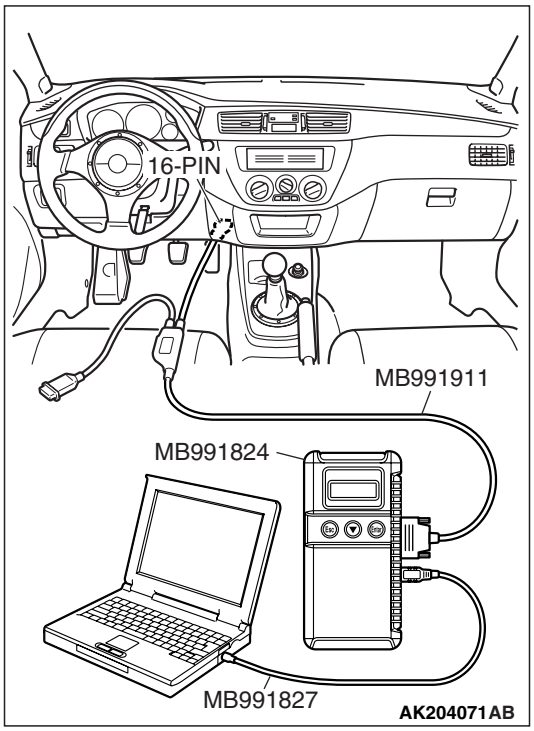

STEP 4. Using scan tool MB991958, check data list item 11: Heated Oxygen Sensor (front).

(1) Start the engine and run at idle.
(2) Set scan tool MB991958 to the data reading mode for item 11, Heated Oxygen Sensor (front).
(3) Keep the engine speed at 2,000 r/min.
- 0 – 0.4 and 0.6 – 1.0 volt should alternate 15 times or more within 10 seconds.

(4) Turn the ignition switch to the "LOCK" (OFF) position.

Q: Is the sensor operating properly?

YES : Go to Step 5.
NO : Replace the heated oxygen sensor (front). Then go to Step 7.

STEP 5. Test the OBD-II drive cycle.

(1) Carry out a test drive with the drive cycle pattern. Refer to GROUP 13A, Diagnostic Function –OBD-II Drive Cycle – Pattern 4 P.13A-12.
(2) Check the diagnostic trouble code (DTC).

Q: Is DTC P0420 set?

YES : Replace the catalytic converter. Then go to Step 6.
NO : The inspection is complete.

STEP 6. Test the OBD-II drive cycle.

(1) Carry out a test drive with the drive cycle pattern. Refer to GROUP 13A, Diagnostic Function –OBD-II Drive Cycle – Pattern 4 P.13A-12.
(2) Check the diagnostic trouble code (DTC).

Q: Is DTC P0420 set?

YES : Replace the ECM. Then go to Step 7.
NO : The inspection is complete.

STEP 7. Test the OBD-II drive cycle.

(1) Carry out a test drive with the drive cycle pattern. Refer to GROUP 13A, Diagnostic Function –OBD-II Drive Cycle – Pattern 4 P.13A-12.
(2) Check the diagnostic trouble code (DTC).

Q: Is DTC P0420 set?

YES : Retry the troubleshooting.
NO : The inspection is complete.

DTC P0441: Evaporative Emission Control System Incorrect Purge Flow

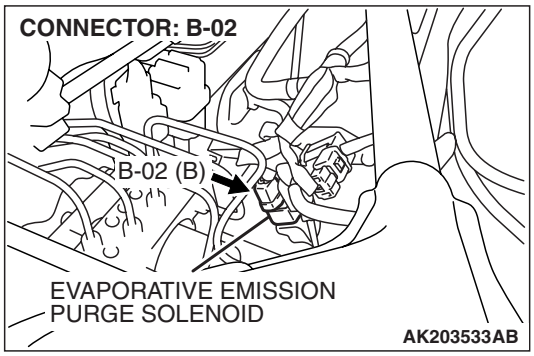

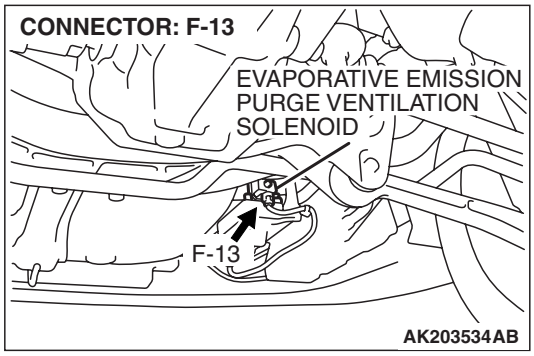

TECHNICAL DESCRIPTION

- ECM detects stuck open conditon of evaporative emission purge solenoid valve and stuck closed condition of evaporative emission ventilation solenoid by pressure change in fuel tank
- Stuck open evaporative emission purge solenoid is judged through monitoring leak of evaporative emission system.
- Stuck closed evaporative emission ventilation solenoid is judged after 20 seconds from end of monitoring leak of evaporative emission system, or of usual operation of evaporative emission purge solenoid from ON to OFF.

DESCRIPTIONS OF MONITOR METHODS

- Fuel tank pressure decreases largely during purge-cut.

MONITOR EXECUTION

- Continuous

MONITOR EXECUTION CONDITIONS (Other monitor and Sensor)

Other Monitor (There is no temporary DTC stored in memory for the item monitored below)

- Fuel tank pressure sensor monitor

Sensor (The sensor below is determined to be normal)

- Not applicable

DTC SET CONDITIONS

Logic Flow Chart

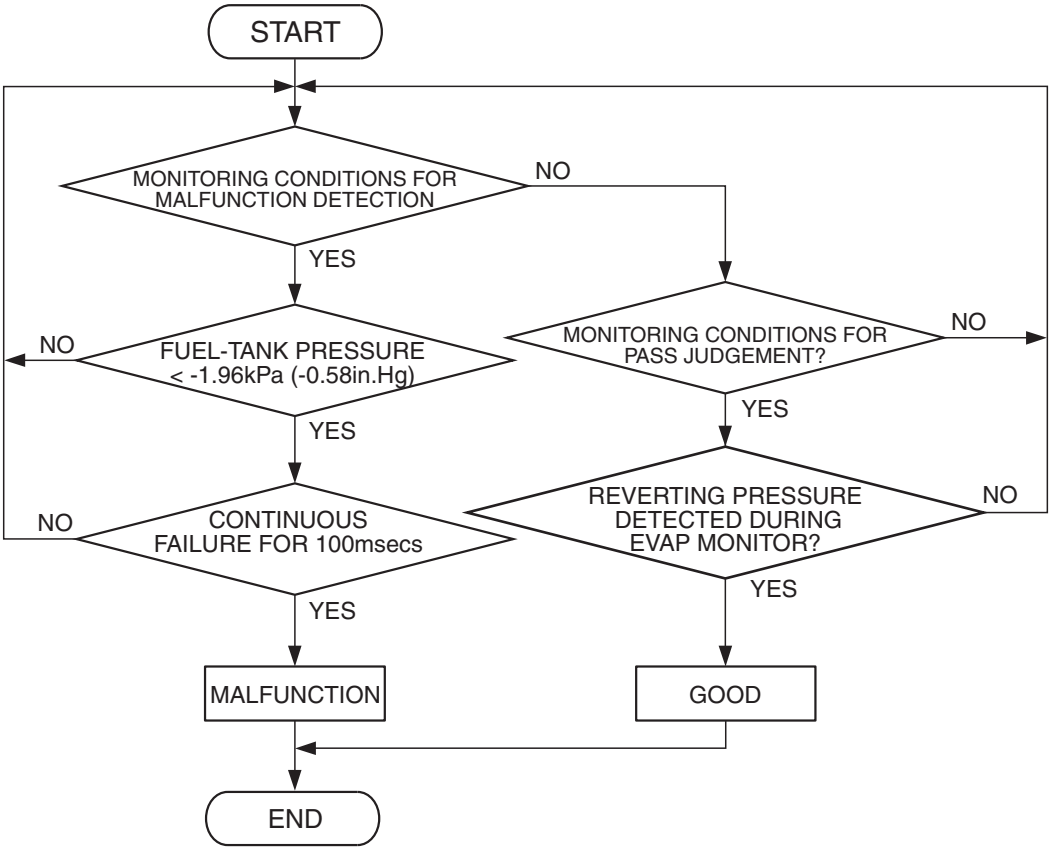

AK302230

Check Conditions

- ON duty cycle of the evaporative emission purge solenoid is 0 percent.
- 20 seconds have elapsed from the time the duty cycle of the evaporative emission purge solenoid has turned to 0 percent.

Judgment Criterion

- The pressure in the fuel tank is –1.96 kPa (–0.58 in.Hg) or less for 0.1 second.

OBD-II DRIVE CYCLE PATTERN

Refer to Diagnostic Function –OBD-II Drive Cycle – Pattern 5 P.13A-12.

TROUBLESHOOTING HINTS (The most likely causes for this code to be set are:)

- Evaporative emission purge solenoid failed.
- Evaporative emission ventilation solenoid failed.
- Fuel tank differencial pressure sensor circuit ralated part(s) failed.

DIAGNOSIS

Required Special Tools:

- MB991958: Scan Tool (M.U.T.-III Sub Assembly)
  - MB991824: V.C.I.
  - MB991827: USB Cable
  - MB991911: Main Harness B

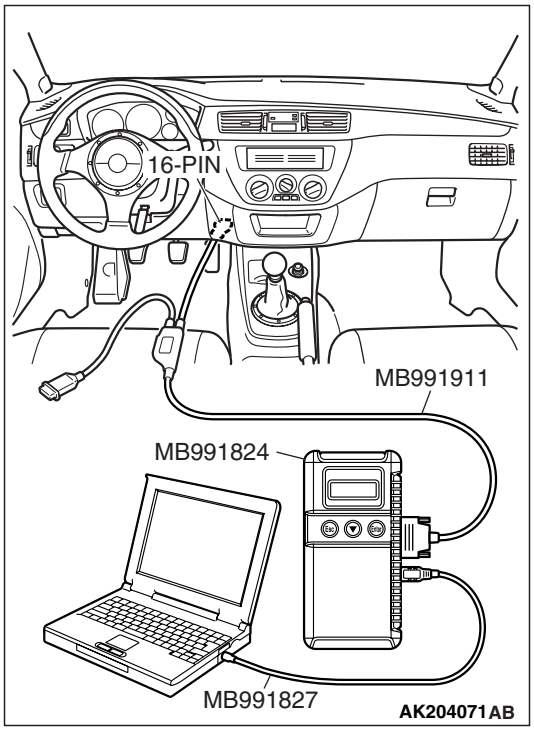

STEP 1. Using scan tool MB991958, read the diagnostic trouble code (DTC).

⚠ CAUTION

To prevent damage to scan tool MB991958, always turn the ignition switch to the "LOCK" (OFF) position before connecting or disconnecting scan tool MB991958.

(1) Connect scan tool MB991958 to the data link connector.
(2) Turn the ignition switch to the "ON" position.
(3) Read the DTC.
(4) Turn the ignition switch to the "LOCK" (OFF) position.

Q: Is DTC P0451 set?

YES : Refer to, DTC P0451 –Evaporative Emission System Pressure Sensor Range/Performance P.13A-471.

NO : Go to Step 2.

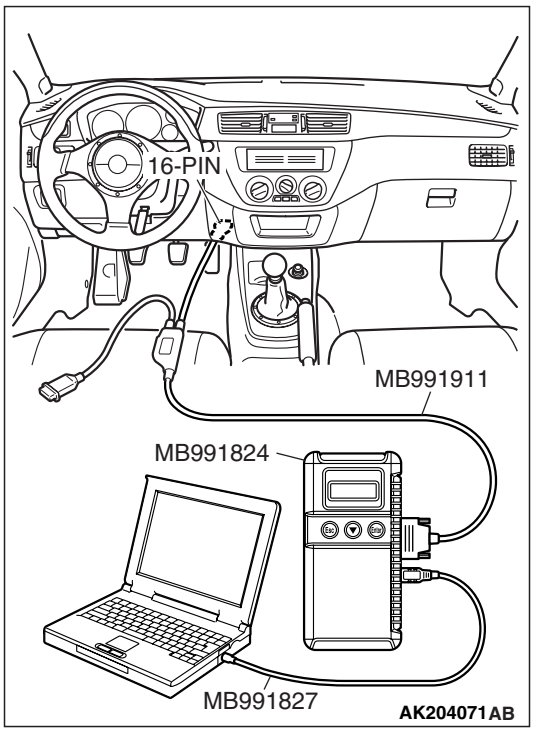

STEP 2. Using scan tool MB991958, check data list item 73: Fuel Tank Differential Pressure Sensor.

(1) Turn the ignition switch to the "ON" position.
(2) Remove the fuel cap.
(3) Set scan tool MB991958 to the data reading mode for item 73, Fuel Tank Differencial Pressure Sensor.
- The fuel tank differencial pressures should be –3.3 to 3.3 kPa (–0.97 to 0.97 in.Hg).

(4) Turn the ignition switch to the "LOCK" (OFF) position.

Q: Is the fuel tank pressure between –3.3 and 3.3 kPa (–0.97 to 0.97 in.Hg)?

YES : Go to Step 3.

NO : Refer to, DTC P0451 –Evaporative Emission System Pressure Sensor Range/Performance P.13A-471.

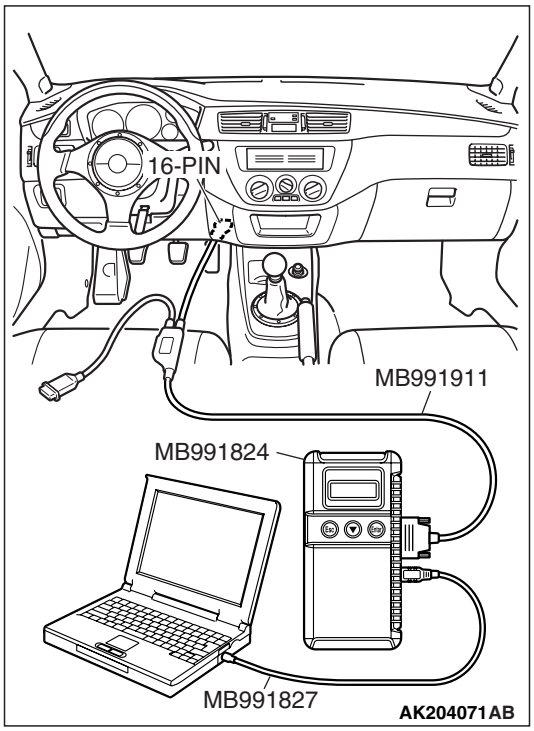

STEP 3. Using scan tool MB991958, check actuator test item 08: Evaporative Emission Purge Solenoid.

(1) Turn the ignition switch to the "ON" position.

(2) Set scan tool MB991958 to the actuator test mode for item 08, Evaporative Emission Purge Solenoid.

- An operation sound should be heard and vibration should be felt when the evaporative emission purge solenoid is operated.

(3) Turn the ignition switch to the "LOCK" (OFF) position.

Q: Is the solenoid operating properly?

YES : Go to Step 4..

NO : Replace the evaporative emission purge solenoid. Then go to Step 5.

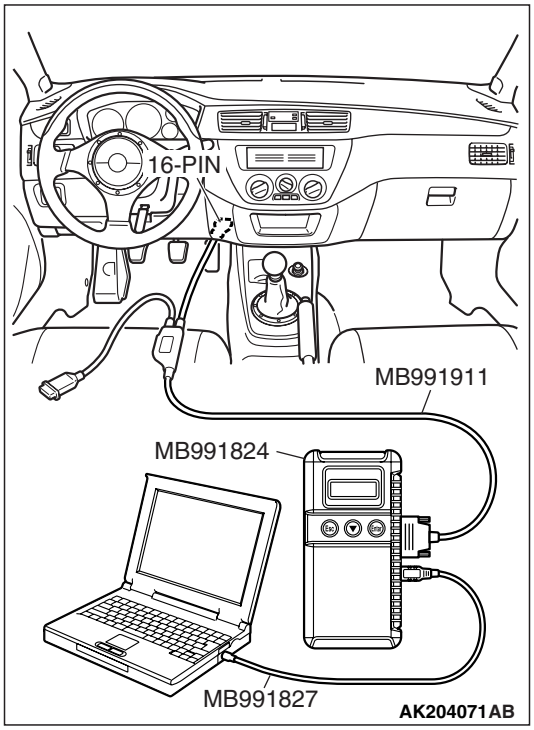

STEP 4. Using scan tool MB991958, check actuator test item 29: Evaporative Emission Ventilation Solenoid.

(1) Turn the ignition switch to the "ON" position.

(2) Set scan tool MB991958 to the actuator test mode for item 29, Evaporative Emission Ventilation Solenoid.

- An operation sound should be heard and vibration should be felt when the evaporative emission ventilation solenoid is operated.

(3) Turn the ignition switch to the "LOCK" (OFF) position.

Q: Is the solenoid operating properly?

YES : Repair or replace the vent hose and air filter. Then go to Step 5.

NO : Replace the evaporative emission ventilation solenoid. Then go to Step 5.

STEP 5. Test the OBD-II drive cycle.

(1) Carry out a test drive with the drive cycle pattern. (Refer to GROUP 13A, Diagnostic Function –OBD-II Drive Cycle – Pattern 5 P.13A-12.

(2) Read the diagnostic trouble code.

Q: Is DTC P0441 set?

YES : Go to Step 1.

NO : The inspection is complete.

DTC P0442: Evaporative Emission System Leak Detected (Small Leak)

SYSTEM DIAGRAM

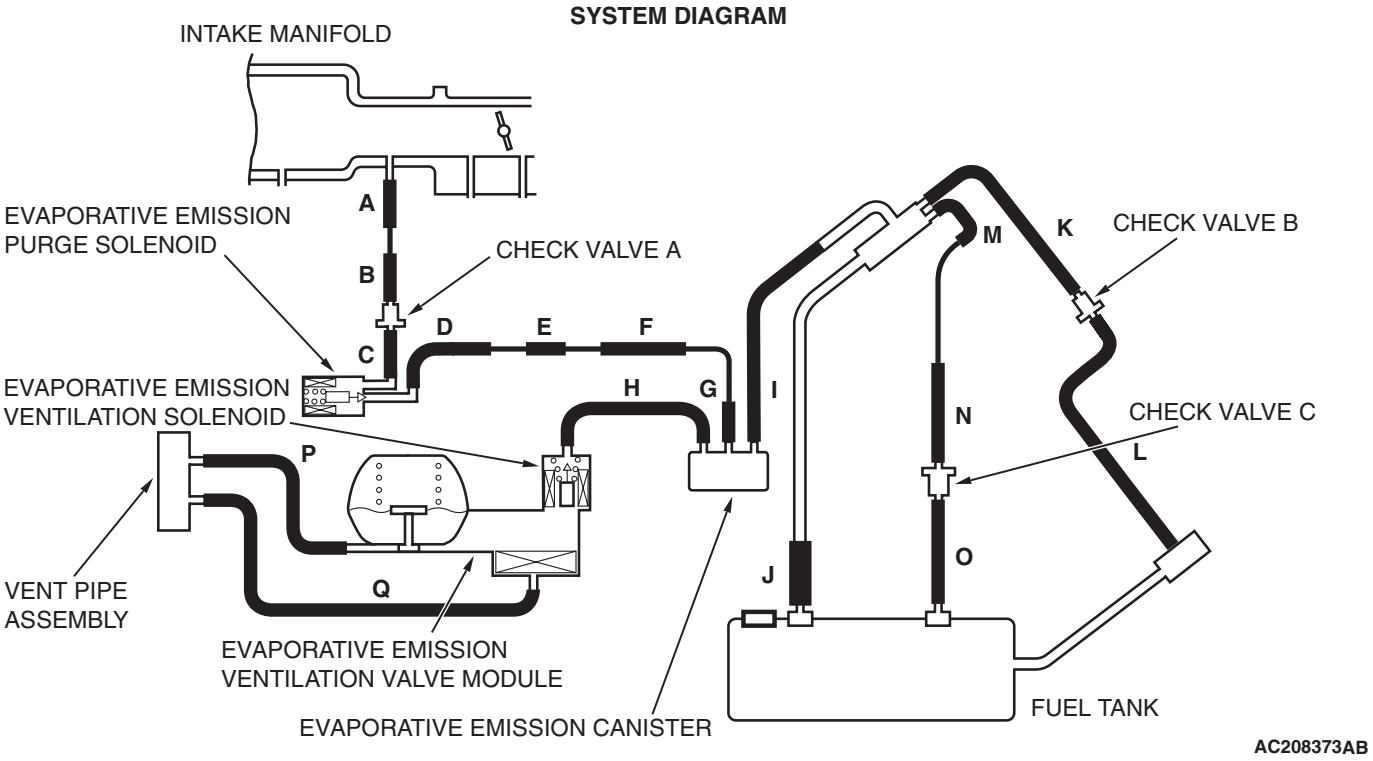

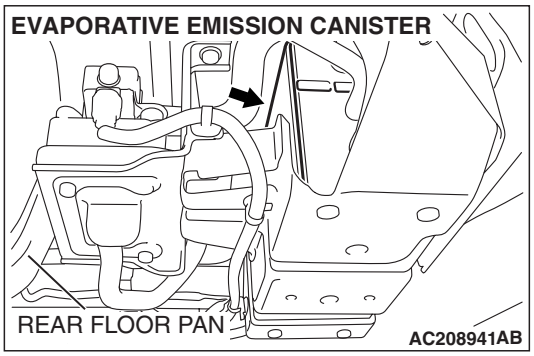

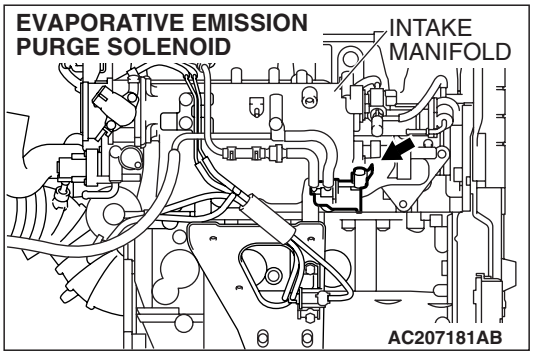

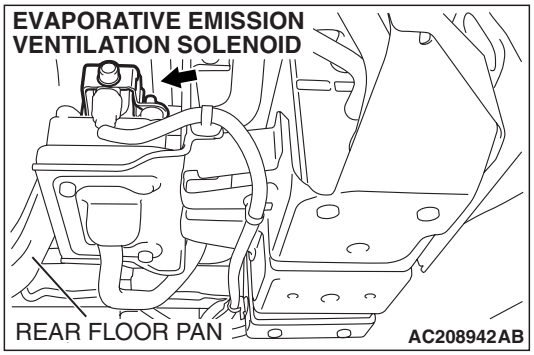

TECHNICAL DESCRIPTION

- The ECM monitors the Evaporative Emission (EVAP) System pressure.
- The ECM controls the evaporative emission ventilation solenoid. It closes the evaporative emission ventilation solenoid to seal the evaporative emission canister side of the system.
- The evaporative emission purge solenoid is opened to allow manifold vacuum to create low pressure (vacuum) in the EVAP system.
- When the EVAP system develops a vacuum of 2 kPa (0.29 psi), the evaporative emission purge solenoid is closed and the fuel system vacuum is maintained at 2 kPa (0.29 psi).
- The ECM determines whether there is a leak in the EVAP system by monitoring the vacuum inside the fuel tank.
- The test is stopped when fuel vapor pressure exceeds predetermined limits.

DESCRIPTIONS OF MONITOR METHODS

Measure reverting pressure after depressurizing by intake manifold negative pressure and detect malfunction if reverting pressure rises largely.

MONITOR EXECUTION

Once per driving cycle.

MONITOR EXECUTION CONDITIONS (OTHER MONITOR AND SENSOR)

Other Monitor (There is no temporary DTC stored in memory for the item monitored below)

- Evaporative emission purge solenoid monitor
- Evaporative emission purge system monitor
- Fuel tank differential pressure sensor monitor
- Evaporative emission ventilation solenoid monitor
- Fuel level sensor monitor
- Fuel temperature sensor monitor

Sensor (The sensors below are determined to be normal)

- Volume airflow sensor
- Barometric pressure sensor
- Intake air temperature sensor
- Engine coolant temperature sensor

LOGIC FLOW CHARTS (Monitor Sequence)

0.04in, 0.02in GROSS LEAK MONITOR

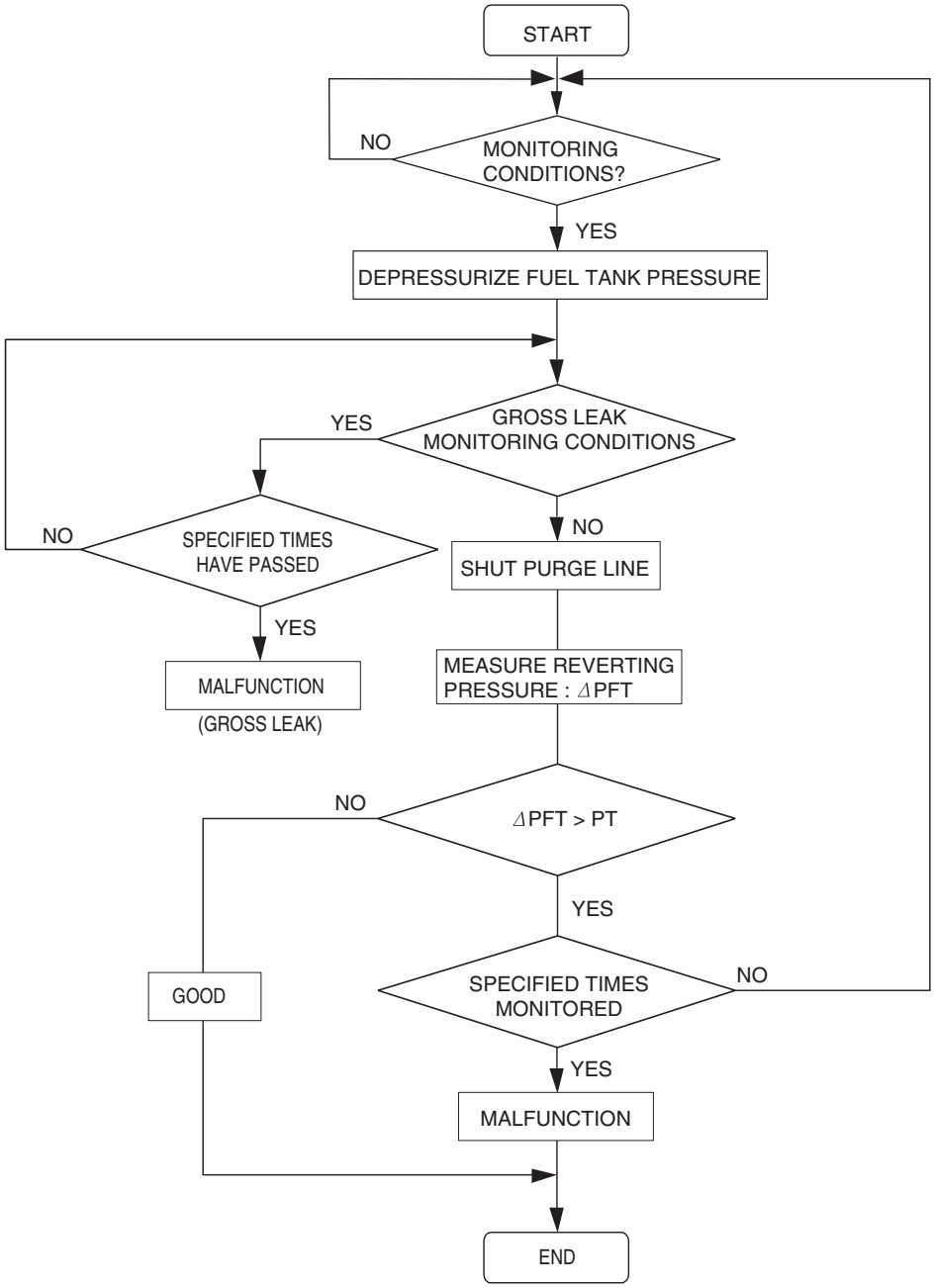

AC306649

DTC SET CONDITIONS

Remaining fuel amount is 15 – 40 percent of capacity (fuel level sensor output signal voltage is 1.4 – 2.4 volts).

Check Conditions A: At Start up

- Intake air temperature is 36° C (97° F) or less when the engine is started.
- The engine coolant temperature is 36° C (97° F) or less when the engine is started.

Check Conditions B: For Test to Run

- Fuel temperature is less than 36° C (97° F), and with in 800 seconds have elapsed since the engine was started.
- Engine coolant temperature is greater than 60° C (140° F).
- Power steering pressure switch: "OFF"
- Barometric pressure is greater than 76 kPa (11 psi).
- Fuel tank differential pressure sensor output voltage is 1 to 4 volts.
- Vehicle speed is greater than or equal to 20 km/h (12.4 mph).

Check Conditions C: For Test to Stop

- Intake air temperature is greater than –10° C (14° F).
- When the evaporative emission purge solenoid and evaporative emission ventilation solenoid are closed, the pressure in the fuel tank is less than 451 Pa (0.065 psi).
- The pressure fluctuation is less than 647 Pa (0.094 psi).
- 10 seconds have elapsed from the start of the previous monitoring.
- Monitoring time: 75 – 125 seconds.

Judgement Criteria

- Internal pressure of the fuel tank has changed more than 785 Pa (0.114 psi) in 20 seconds after the tank and vapor line were closed.
- ECM monitors for this condition once during drive cycle.

DTC SET CONDITIONS

Remaining fuel amount is 40 – 85 percent of capacity (fuel level sensor output voltage is 2.4 – 3.7 volts).

Check Conditions A: At Start up

- Intake air temperature is less than 36° C (97° F) when the engine is started.
- The engine coolant temperature is less than 36° C (97° F) when the engine is started.

Check Conditions B: For Test to Run

- The fuel temperature is less than 36° C (97° F).
- Barometric pressure is greater than 76 kPa (11 psi).
- Fuel tank differential pressure sensor output voltage is 1 to 4 volts.

Check Conditions C: For Test to Stop

- Intake air temperature is greater than –10° C (14 ° F).
- Engine coolant temperature is greater than 20° C (68° F).
- When the evaporative emission purge solenoid and evaporative emission ventilation solenoid are closed, the pressure in the fuel tank is less than 324 Pa (0.047 psi).
- 10 seconds have elapsed from the start of the previous monitoring.
- Monitoring time: 10 – 14 minutes.

Judgement Criteria

- Internal pressure of the fuel tank has changed more than 1.96 kPa (0.285 psi) 128 seconds after the purge and ventilation solenoids were closed.
- ECM monitors for this condition once during drive cycle.

OBD-II DRIVE CYCLE PATTERN

Refer to Diagnostic Function –OBD-II Drive Cycle – Pattern 5 P.13A-12.

TROUBLESHOOTING HINTS (THE MOST LIKELY CAUSES FOR THIS CODE TO BE SET ARE:)

- Loose fuel cap.
- Fuel cap relief pressure is incorrect.
- Evaporative emission canister seal is leaking.
- Fuel tank, purge line or vapor line seal is leaking.
- Evaporative emission ventilation solenoid does not seal.
- Evaporative emission purge solenoid does not seal.

DIAGNOSIS

Required Special Tools:

- MB991958: Scan Tool (M.U.T.-III Sub Assembly)
  - MB991824: V.C.I.
  - MB991827: USB Cable
  - MB991911: Main Harness B

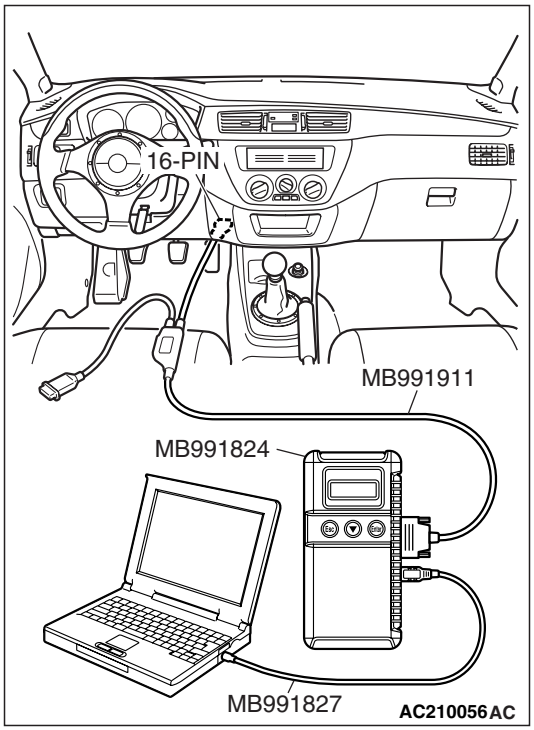

STEP 1. Using scan tool MB991958, check the evaporative emission system monitor test.

⚠ CAUTION

- **To prevent damage to scan tool MB991958, always turn the ignition switch to the "LOCK" (OFF) position before connecting or disconnecting scan tool MB991958.**
- **During this test, the ECM will automatically increase the engine speed to 1,600 r/min or greater. Check that the transaxle is set to the neutral position.**

(1) Connect scan tool MB991958 to the data link connector.
(2) Turn the ignition switch to the "ON" position.
(3) Erase the DTCs using scan tool MB991958.
(4) Check that the fuel cap is securely closed. (Tighten until three clicks are heard.)
(5) Start the engine.
(6) Select "System Test."
(7) Select "Evap Leak Mon."
(8) During this test, keep the accelerator pedal at the idle position.
(9) Keep the engine speed and engine load within the specified range. When the monitor test starts, the "In Progress" item on scan tool MB991958 will change from "NO" to "YES."
(10) Turn the ignition switch to the "LOCK" (OFF) position, and disconnect scan tool MB991958.

Q: Is "Evap Leak Mon. Completed. Test Failed and DTCs Set" displayed on scan tool MB991958?

YES : A malfunction has been detected during the monitor test. Refer to the Diagnostic Trouble Code Chart and diagnose any other DTCs that are set P.13A-41. If no other DTCs have been set, go to Step 2.

NO : If "Evap Leak Mon. Completed. Test Passed" is displayed on scan tool MB991958, the evaporative emission system is working properly at this time. Explain to the customer that an improperly tightened fuel cap can cause the MIL to turn on. Return the vehicle to the customer.

NO : If "Evap Leak Mon. Discontinued. Retest again from the first" is displayed on scan tool MB991958, the EVAP monitor has been interrupted during the test. Turn the ignition switch to the "LOCK" (OFF) position once, and repeat the monitoring from Step 1.

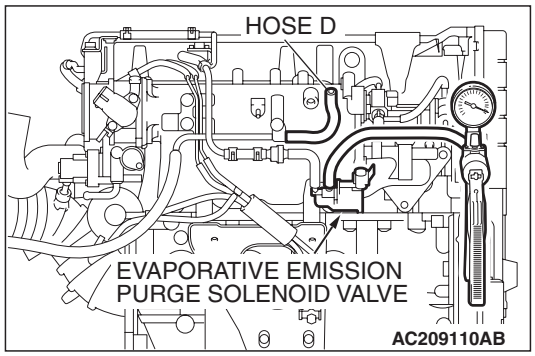

STEP 2. Check the evaporative emission purge solenoid for leaks.

(1) Disconnect hose D from the evaporative emission purge solenoid and connect a hand vacuum pump to the nipple of the evaporative emission purge solenoid.
(2) Use the hand vacuum pump to confirm that the evaporative emission purge solenoid holds vacuum.
(3) Disconnect the hand vacuum pump, and connect hose D to the evaporative emission purge solenoid.

Q: Does the evaporative emission purge solenoid hold vacuum?

YES : Go to Step 3.
NO : Replace the evaporative emission purge solenoid. Go to Step 16.

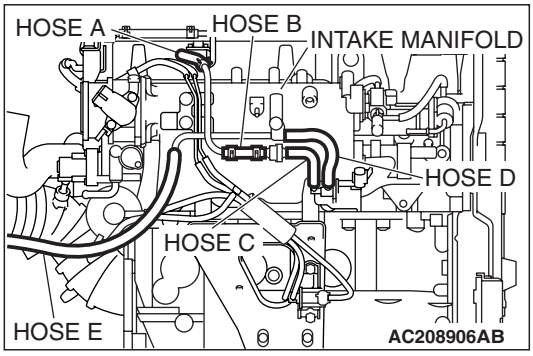

STEP 3. Check for leaks in evaporative emission system hoses A through E.

Use a hand vacuum pump to test each hose from hose A to hose E.

Q: Are the hoses in good condition?

YES : Go to Step 4.
NO : Replace any damaged hose. Go to Step 16.

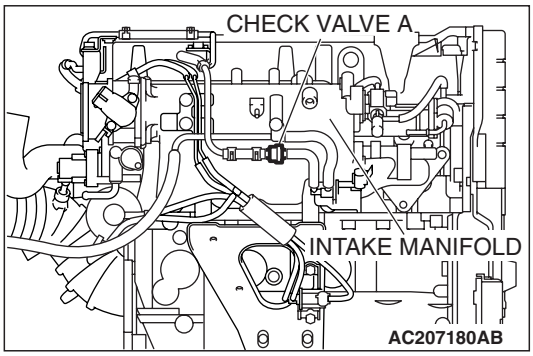

STEP 4. Test check valve A.

(1) Check valve A is a one-way check valve.

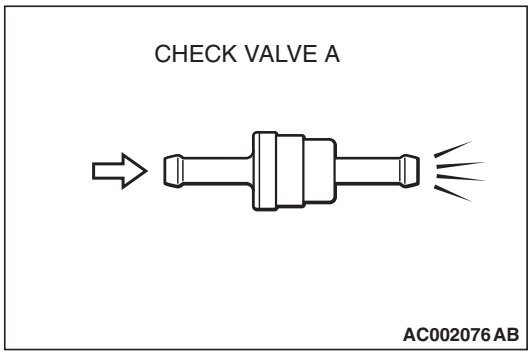

(2) Check valve A should allow air to flow in only one direction.

Q: Does check valve A allow air to pass in one direction only?

YES : Go to Step 5.
NO : Replace check valve A. Go to Step 16.

STEP 5. Check the evaporative emission ventilation solenoid and hose H using scan tool MB991958.

⚠ CAUTION

To prevent damage to scan tool MB991958, always turn the ignition switch to the "LOCK" (OFF) position before connecting or disconnecting scan tool MB991958.

(1) Connect scan tool MB991958 to the data link connector.

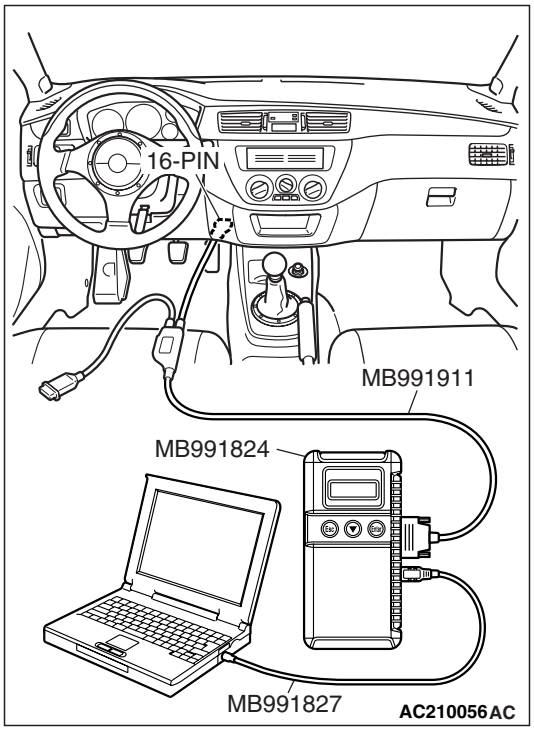

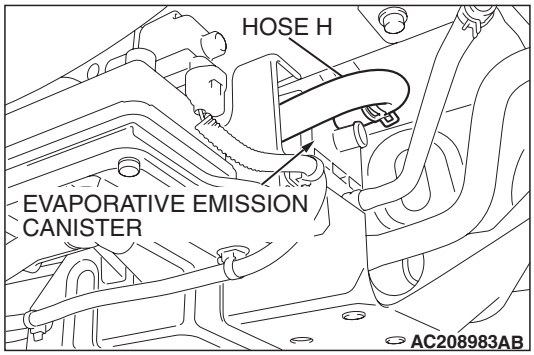

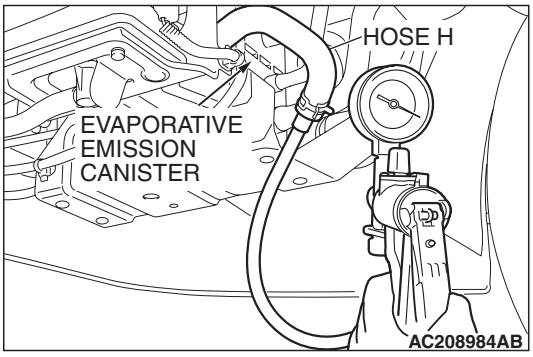

(2) Disconnect hose H from the evaporative emission canister side, and connect a hand vacuum pump.
(3) Turn the ignition switch to the "ON" position.
(4) Set scan tool MB991958 to actuator test mode for item 29: Evaporative Emission Ventilation Solenoid. While the evaporative emission ventilation solenoid is energized, operate the hand vacuum pump and confirm that the solenoid holds vacuum.
(5) Turn the ignition switch to the "LOCK" (OFF) position, and disconnect scan tool MB991958.
(6) Disconnect the hand vacuum pump, and connect hose H to the evaporative emission canister.

Q: Did the evaporative emission ventilation solenoid hold vacuum?

YES : Go to Step 7.
NO : Go to Step 6.

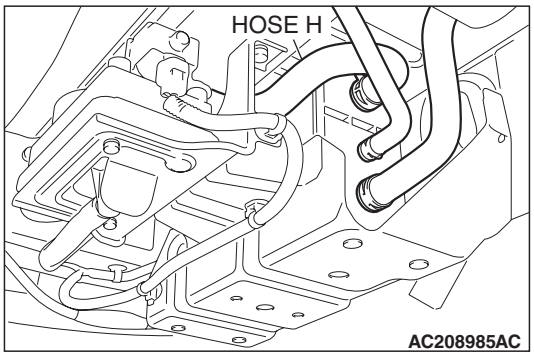

STEP 6. Check for leaks in evaporative emission system hose H.

Use a hand vacuum pump to test each hose from hose H.

Q: Are the hoses in good condition?

YES : Replace the evaporative emission ventilation solenoid. Go to Step 16.

NO : Replace hose H. Go to Step 16.

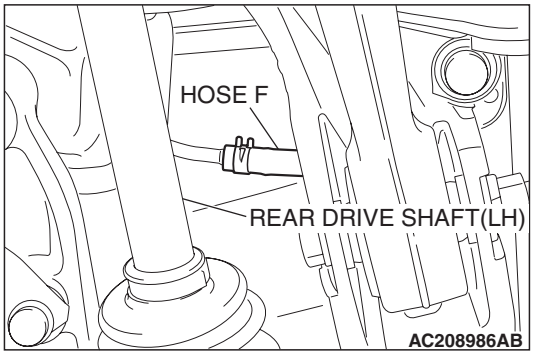

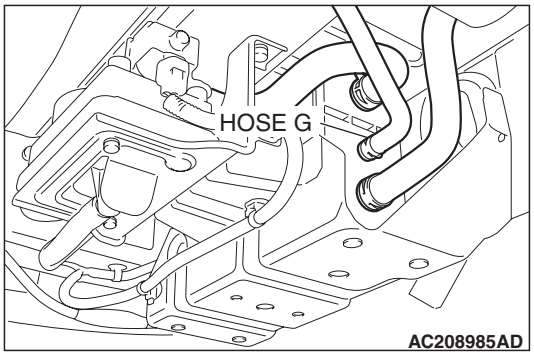

STEP 7. Check for leaks in evaporative emission system hoses F and G.

Use a hand vacuum pump to test each hose from hose F to hose G.

Q: Are the hoses in good condition?

YES : Go to Step 8.

NO : Replace the damaged hose. Go to Step 16.

STEP 8. Pressure test the evaporative emission system lines from hoses I to O.

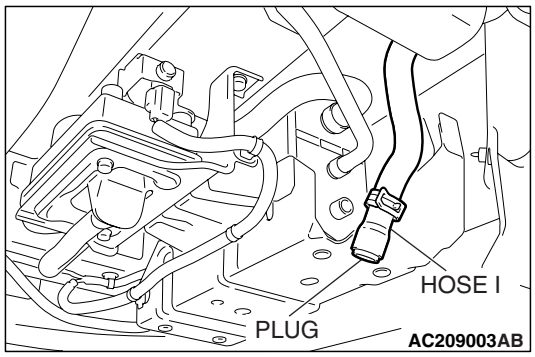

(1) Disconnect hose I from the canister, and plug hose I securely.
(2) Confirm that the evaporative emission system pressure pump (Miller number 6872A) is operating properly. Perform the self-test as described in the manufacturer's instructions.

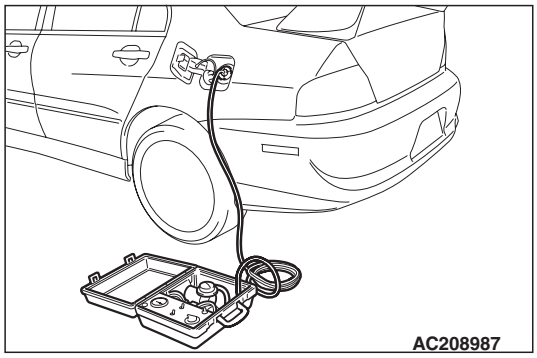

(3) Connect the evaporative emission system pressure pump to the fuel tank filler tube.
(4) Pressure test the system to determine whether any leaks are present.

NOTE: The "Pressure test" in this procedure refers to the I/M240 Simulation Test. The eight steps of this test are described in the manufacturer's instructions for the evaporative emission system pressure pump, Miller number 6872A.

(5) Disconnect the evaporative emission system pressure pump, and reinstall the fuel cap.
(6) Connect hose I to the canister.

Q: Is the evaporative emission system line free of leaks?

YES : Go to Step 15.
NO : Go to Step 9.

STEP 9. Check for leaks in evaporative emission system hoses I, K, L and M.

(1) Remove the fuel tank filler tube protector (Refer to GROUP 13B, Fuel Tank P.13B-13).

(2) Perform a leakage test with a hand vacuum pump on each hose I, K, L and M.

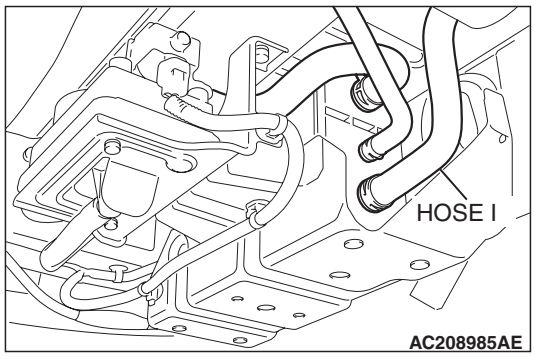

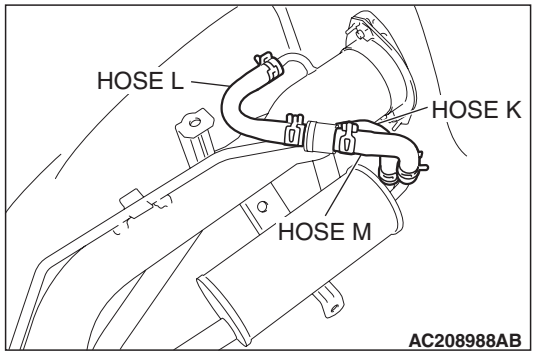

Q: Do the hoses hold vacuum?

YES : Go to Step 10.

NO : Replace any damaged hose, and reinstall the fuel tank filler tube protector. Refer to GROUP 13B, Fuel Tank P.13B-13. Go to Step 16.

STEP 10. Test check valve B.

(1) Check valve B is a one-way check valve.

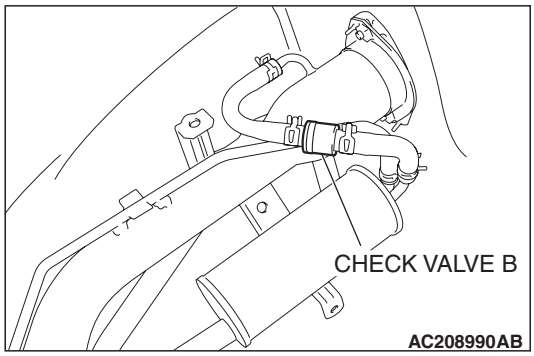

(2) Check valve B should allow air to flow in only one direction.

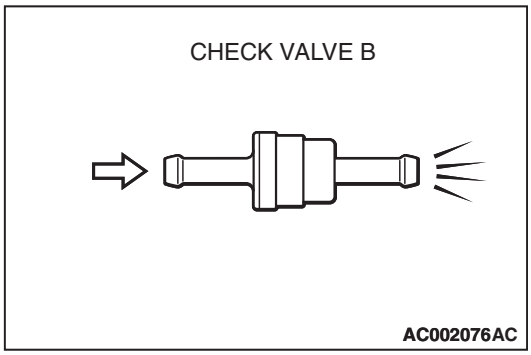

Q: Does check valve B allow air to pass in one direction only?

YES : Go to Step 11.

NO : Replace check valve B, and reinstall the fuel tank filler tube protector. Refer to GROUP 13B, Fuel Tank P.13B-13. Go to Step 16.

STEP 11. Check for leaks in evaporative emission system hoses J, N and O.

(1) Remove the fuel tank (Refer to GROUP 13B, Fuel Tank P.13B-13).

(2) Perform a leakage test with a hand vacuum pump on each hose J, N and O.

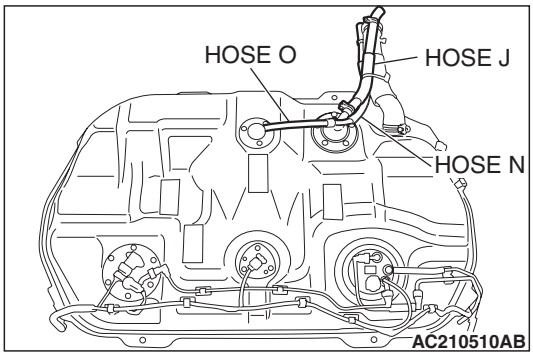

Q: Do the hoses hold vacuum?

YES : Go to Step 12.

NO : Replace any damaged hose, and reinstall the fuel tank. Refer to GROUP 13B, Fuel Tank P.13B-13. Go to Step 16.

STEP 12. Test check valve C.

(1) Check valve C is a one-way check valve.

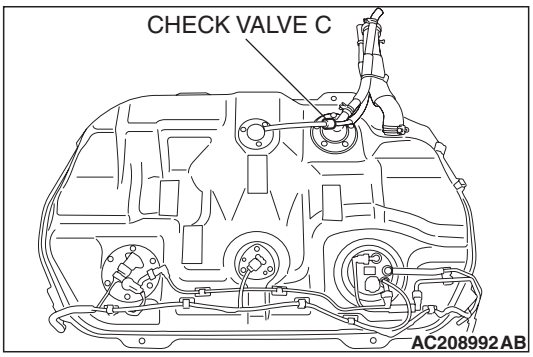

(2) Check valve C should allow air to flow in only one direction.

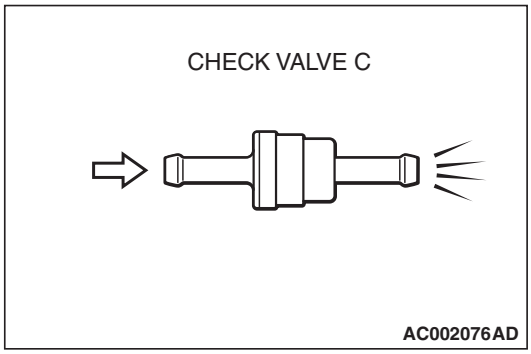

Q: Does check valve C allow air to pass in one direction only?

YES : Go to Step 13.

NO : Replace check valve C, and reinstall the fuel tank and the fuel tank filler tube protector. Refer to GROUP 13B, Fuel Tank P.13B-13. Go to Step 16.

STEP 13. Check for leaks in the fuel tank.

(1) Visually check for cracks or other leaks in the fuel tank.

NOTE: Carefully check the fuel pump assembly and the differential pressure sensor installation in the fuel tank.

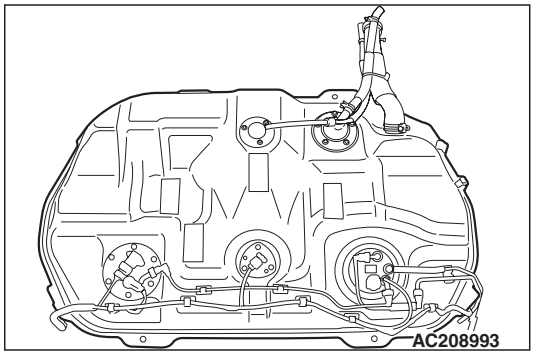

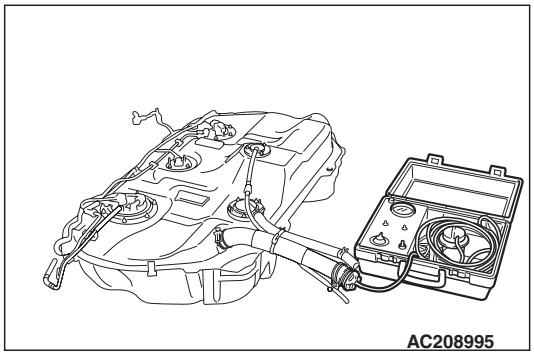

(2) Connect an evaporative emission system pressure pump (Miller number 6872A) to the filler hose.

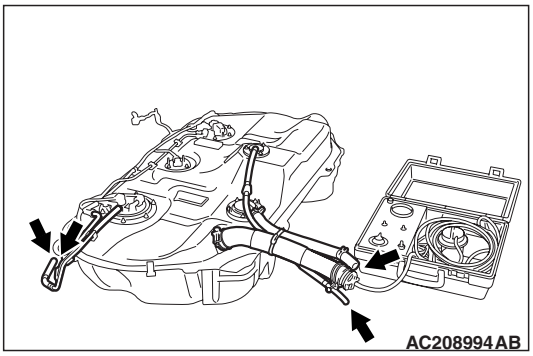

(3) Plug the hose shown in the illustration.

NOTE: If these items are not securely plugged here, the fuel could leak in the next step.

(4) Pressurize the fuel tank with the evaporative emission system pressure pump.

(5) In the pressurized state, check for leaks by applying a soapy water solution to each section and look for bubbles.

Q: Are any leaks found?

YES : When there is a leak from the attachment points of the fuel pump assembly, fuel tank differential pressure sensor, leveling valve or fuel tank rollover valve, reassemble the leaked parts and check again that there are no leaks. Then reinstall the fuel tank. Go to Step 16 .

YES : When there is a leak from the fuel tank, replace the fuel tank. Refer to GROUP 13B, Fuel Tank P.13B-13. Go to Step 16.

NO : When there is no leak, reinstall the fuel tank, refer to GROUP 13B, Fuel Tank P.13B-13. Go to Step 14.

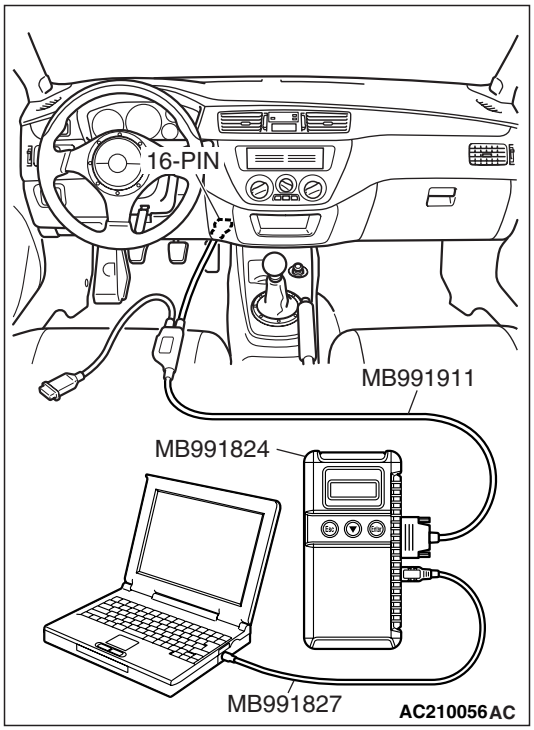

STEP 14. Using scan tool MB991958, check the evaporative emission system monitor test.

⚠ CAUTION

- **To prevent damage to scan tool MB991958, always turn the ignition switch to the "LOCK" (OFF) position before connecting or disconnecting scan tool MB991958.**
- **During this test, the ECM automatically increases the engine speed to 1,600 r/min or greater. Check that the transaxle is set to the neutral position.**

(1) Connect scan tool MB991958 to the data link connector.
(2) Turn the ignition switch to the "ON" position.
(3) Erase the DTCs using scan tool MB991958.
(4) Check that the fuel cap is securely closed. (Tighten until three clicks are heard.)
(5) Start the engine.
(6) Select "System Test."
(7) Select "Evap Leak Mon."
(8) During the test, keep the accelerator pedal at the idle position.
(9) Keep the engine speed and engine load within the specified range. When the monitor test starts, the "In Progress" item on scan tool MB991958 will change from "NO" to "YES."
(10) Turn the ignition switch to the "LOCK" (OFF) position. Disconnect scan tool MB991958.

Q: Is "Evap Leak Mon. Completed. Test Failed and DTCs Set" displayed on scan tool MB991958?

YES : Replace the ECM. Go to Step 16.

NO : If "Evap Leak Mon. Completed. Test Passed" is displayed on scan tool MB991958, the evaporative emission system is working properly at this time. Go to Step 16.

NO : If "Evap Leak Mon. Discontinued. Retest again from the first" is displayed on scan tool MB991958, the EVAP monitor has been interrupted during the test. Turn the ignition switch to the "LOCK" (OFF) position once, and repeat the monitoring from Step 14.

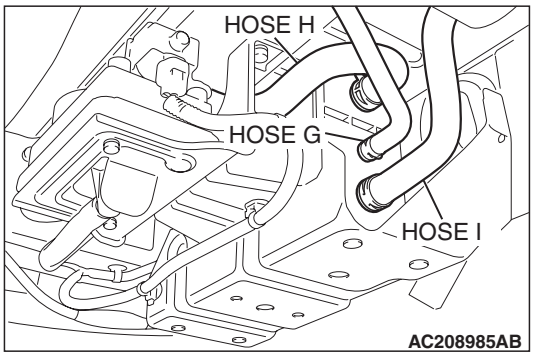

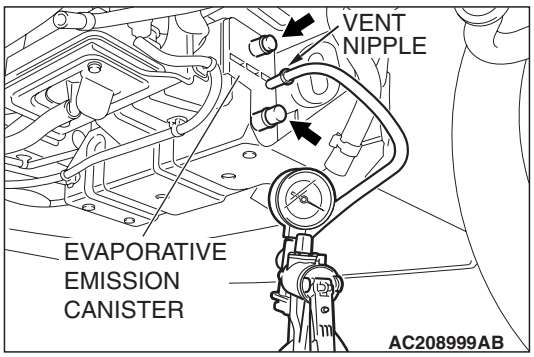

STEP 15. Check for leaks in the evaporative emission canister.

(1) Disconnect hoses G, H and I from the evaporative emission canister side, and connect a hand vacuum pump to the evaporative emission canister instead of hose G, and plug the other nipples.
(2) Apply a pressure on the hand vacuum pump, and confirm that air is maintained.
(3) Disconnect the hand vacuum pump, and connect hoses G, H and I to the canister.

Q: Does the evaporative emission canister hold vacuum?

YES : Go to Step 14.
NO : Replace the evaporative emission canister. Refer to GROUP 17, Evaporative Emission Canister and Fuel Tank Pressure Relief Valve P.17-21. Go to Step 16 .

STEP 16. Perform the OBD-II drive cycle.

(1) Confirm the repair by performing the appropriate drive cycle. Refer to Diagnostic Function –OBD-II Drive Cycle – Pattern 5 P.13A-12.
(2) Read the diagnostic trouble code (DTC).

Q: Is DTC P0442 set?

YES : Return to Step 1.
NO : The procedure is complete.

DTC P0443: Evaporative Emission Control System Purge Control Valve Circuit

Evaporative Emission Purge Solenoid Circuit

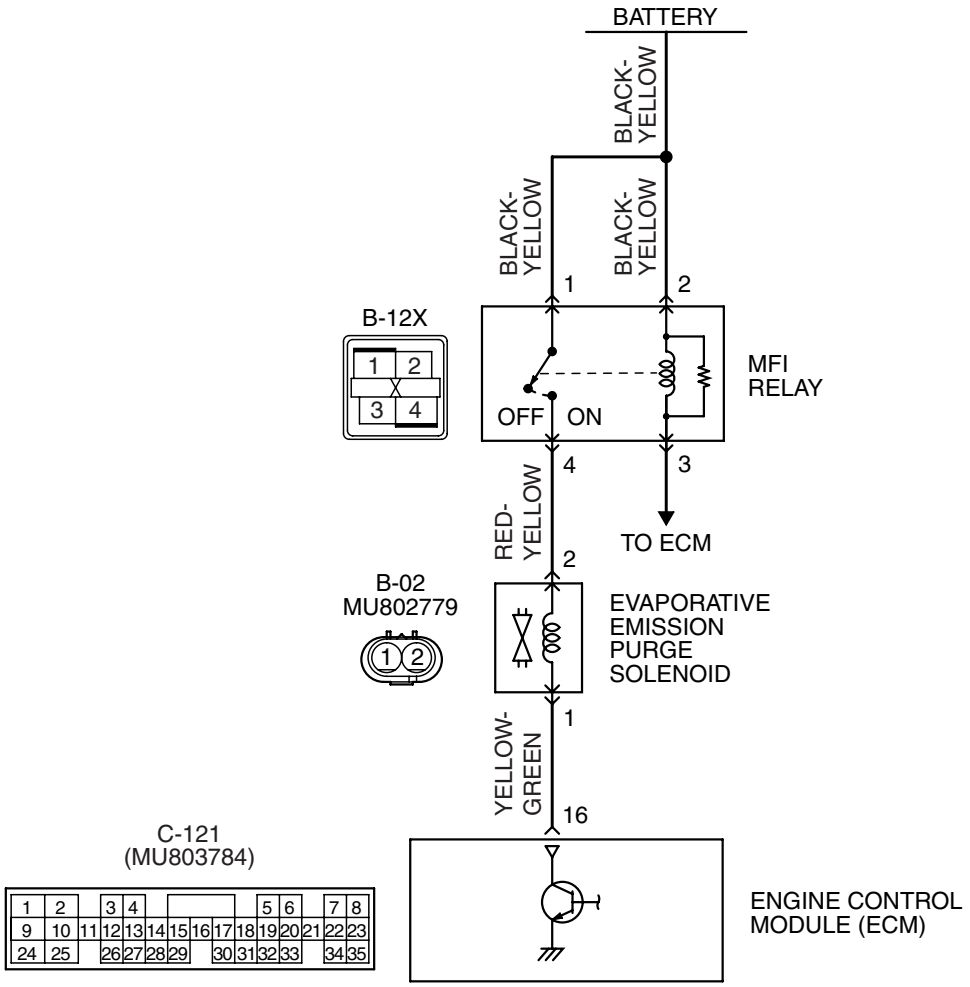

AK502075

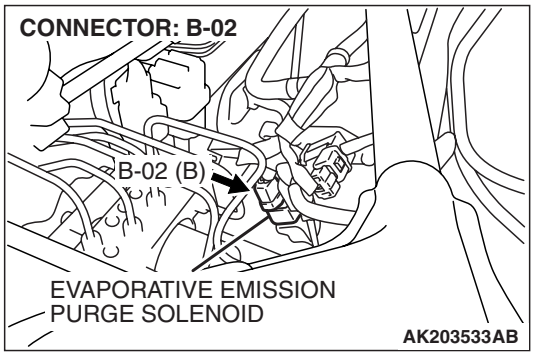

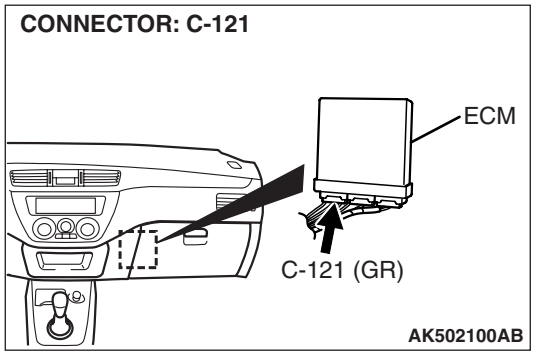

TSB Revision

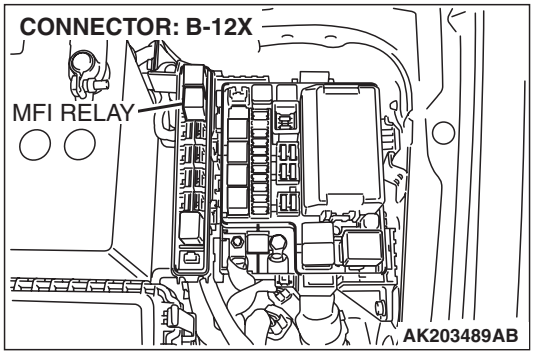

CIRCUIT OPERATION

- Power to the evaporative emission purge solenoid power is supplied from the MFI relay (terminal No. 4).
- The ECM controls ground evaporative emission purge solenoid by turning the power transistor in the ECM "ON" and "OFF".

TECHNICAL DESCRIPTION

- To judge if there is open circuit in the evaporative emission purge solenoid drive circuit, ECM measures the surge voltage of the evaporative emission purge solenoid coil.
- The ECM drives the evaporative emission purge solenoid. After the solenoid is turned off, the ECM will check if the solenoid coil produces a surge voltage of 2 volts or more.

DESCRIPTIONS OF MONITOR METHODS

- Off-surge does not occur after solenoid is operated from on to off.

MONITOR EXECUTION

- Continuous

MONITOR EXECUTION CONDITIONS (Other monitor and Sensor)

Other Monitor (There is no temporary DTC stored in memory for the item monitored below)

- Not applicable

Sensor (The sensor below is determined to be normal)

- Not applicable

DTC SET CONDITIONS

LOGIC FLOW CHART

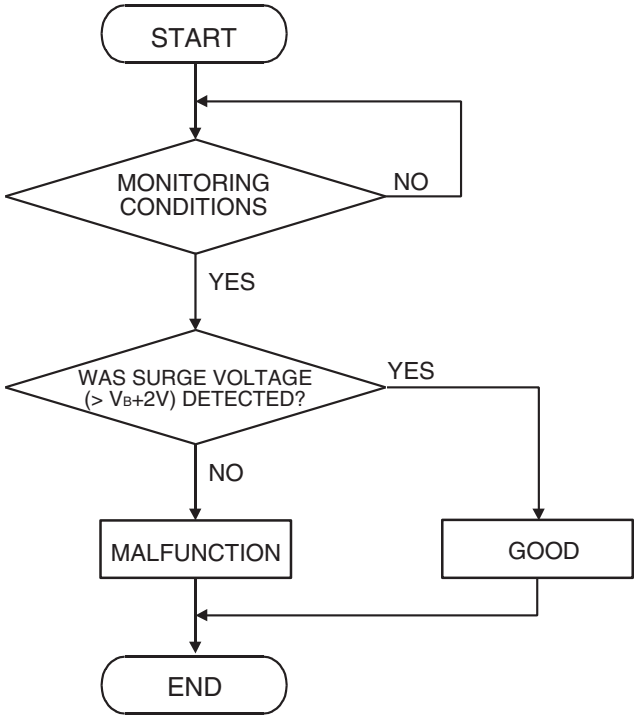

AK301449

Check Conditions
- Engine is being cranked.
- Battery positive voltage is at between 10 and 16.5 volts.

Judgment Criteria
- The evaporative emission purge solenoid coil surge voltage (battery positive voltage + 2 volts) is not detected for 0.2 second.
- The ECM monitors for this condition once during the drive cycle.

Check Conditions
- Battery positive voltage is at between 10 and 16.5 volts.
- ON duty cycle of the evaporative emission purge solenoid is between 10 and 90 percent.
- ON duty cycle of the EGR vacuum regulator solenoid valve is 0 percent.
- Evaporative emission ventilation solenoid is OFF.
- More than 1 second has elapsed after the above mentioned conditions have been met.

Judgment Criterion
- The evaporative emission purge solenoid coil surge voltage (battery positive voltage + 2 volts) is not detected for 1 second. When the evaporative emission purge solenoid is turned OFF.

OBD-II DRIVE CYCLE PATTERN

Refer to Diagnostic Function –OBD-II Drive Cycle – Pattern 23 P.13A-12.

TROUBLESHOOTING HINTS (The most likely causes for this code to be set are:)

- Evaporative emission purge solenoid failed.
- Open or shorted evaporative emission purge solenoid circuit, harness damage, or connector damage.
- ECM failed.

DIAGNOSIS

Required Special Tools:

- MB991958: Scan Tool (M.U.T.-III Sub Assembly)
  - MB991824: V.C.I.
  - MB991827: USB Cable
  - MB991911: Main Harness B

STEP 1. Using scan tool MB991958, check actuator test item 08: Evaporative Emission Purge Solenoid.

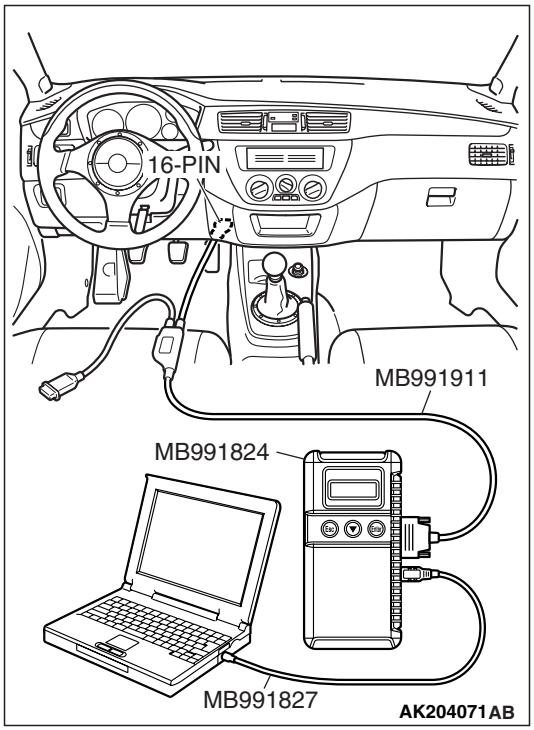

⚠ CAUTION

To prevent damage to scan tool MB991958, always turn the ignition switch to the "LOCK" (OFF) position before connecting or disconnecting scan tool MB991958.

(1) Connect scan tool MB991958 to the data link connector.
(2) Turn the ignition switch to the "ON" position.
(3) Set scan tool MB991958 to the actuator test mode for item 08, Evaporative Emission Purge Solenoid.
  - An operation sound should be heard and vibration should be felt when the evaporative emission purge solenoid is operated.

(4) Turn the ignition switch to the "LOCK" (OFF) position.

Q: Is the solenoid operating properly?

YES : It can be assumed that this malfunction is intermittent. Refer to GROUP 00, How to Use Troubleshooting/Inspection Service Points –How to Cope with Intermittent Malfunctions P.00-13.

NO : Go to Step 2.

STEP 2. Check harness connector B-02 at the evaporative emission purge solenoid for damage.

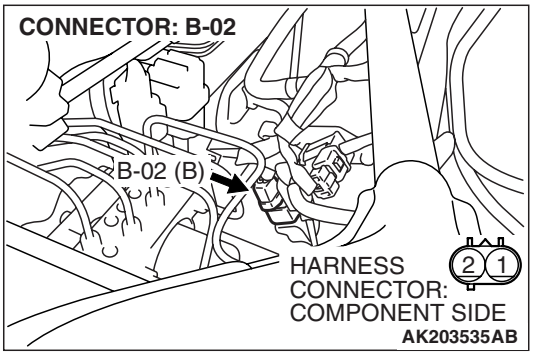

Q: Is the harness connector in good condition?

YES : Go to Step 3.

NO : Repair or replace it. Refer to GROUP 00E, Harness Connector Inspection P.00E-2. Then go to Step 12.

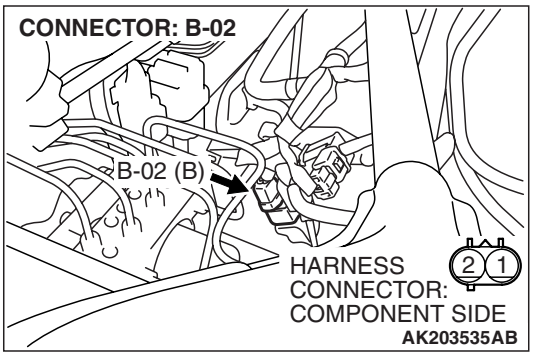

STEP 3. Check the evaporative emission purge solenoid.

(1) Disconnect the evaporative emission purge solenoid connector B-02.

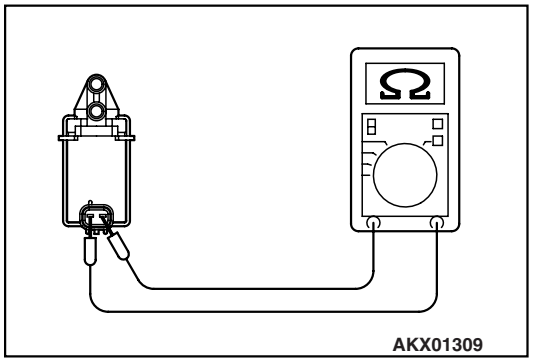

(2) Measure the resistance between evaporative emission purge solenoid side connector terminal No. 1 and No. 2.

Standard value: 30 – 34 ohms [at 20° C (68° F)]

Q: Is the measured resistance between 30 and 34 ohms [at 20° C (68° F)]?

YES : Go to Step 4.

NO : Replace the evaporative emission purge solenoid. Then go to Step 12.

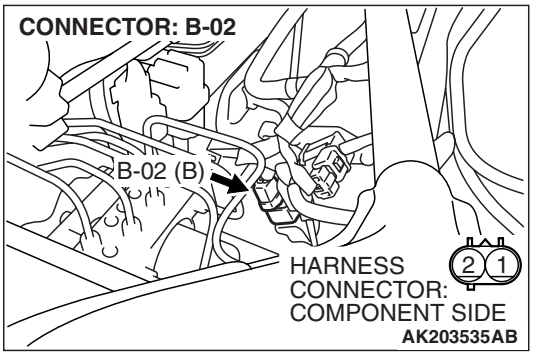

STEP 4. Measure the power supply voltage at evaporative emission purge solenoid harness side connector B-02.

(1) Disconnect connector B-02 and measure at the harness side.

(2) Turn the ignition switch to the "ON" position.

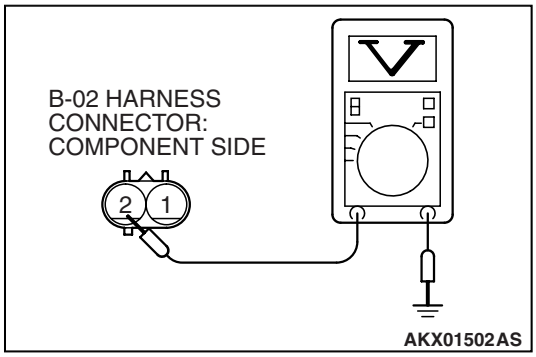

(3) Measure the voltage between terminal No. 2 and ground.
- Voltage should be battery positive voltage.

(4) Turn the ignition switch to the "LOCK" (OFF) position.

Q: Is battery positive voltage (approximately 12 volts) present?

YES : Go to Step 6.

NO : Go to Step 5.

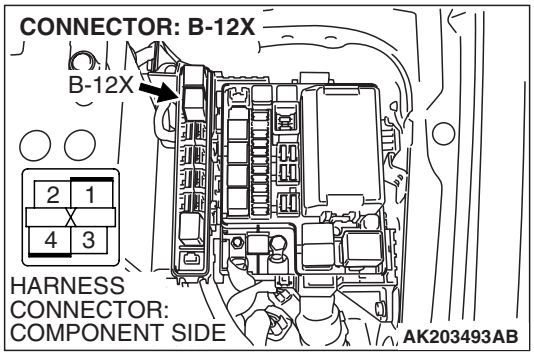

STEP 5. Check harness connector B-12X at MFI relay for damage.

Q: Is the harness connector in good condition?

YES : Repair harness wire between MFI relay connector B-12X (terminal No. 4) and evaporative emission purge solenoid connector B-02 (terminal No. 2) because of open circuit or short circuit to ground. Then go to Step 12.

NO : Repair or replace it. Refer to GROUP 00E, Harness Connector Inspection P.00E-2. Then go to Step 12.

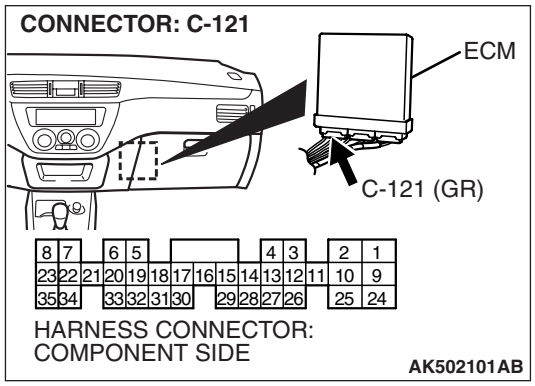

STEP 6. Measure the power supply voltage at ECM connector C-121 by backprobing.

(1) Do not disconnect connector C-121.

(2) Turn the ignition switch to the "ON" position.

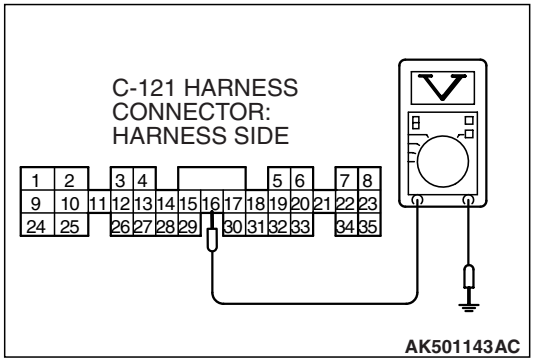

(3) Measure the voltage between terminal No. 16 and ground by backprobing.
- Voltage should be battery positive voltage.

(4) Turn the ignition switch to the "LOCK" (OFF) position.

Q: Is battery positive voltage (approximately 12 volts) present?

YES : Go to Step 9.

NO : Go to Step 7.

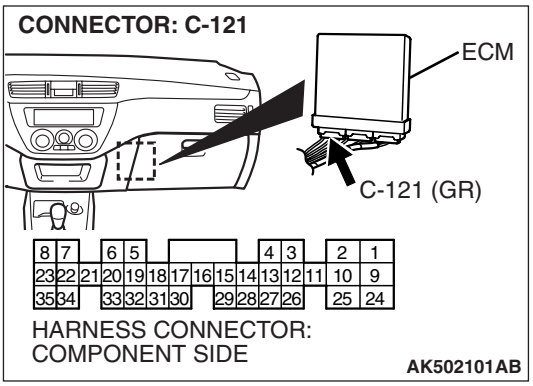

STEP 7. Check harness connector C-121 at ECM for damage.

Q: Is the harness connector in good condition?

YES : Go to Step 8.

NO : Repair or replace it. Refer to GROUP 00E, Harness Connector Inspection P.00E-2. Then go to Step 12.

STEP 8. Check for open circuit and short circuit to ground between evaporative emission purge solenoid connector B-02 (terminal No. 1) and ECM connector C-121 (terminal No. 16).

Q: Is the harness wire in good condition?

YES : Replace the ECM. Then go to Step 12.

NO : Repair it. Then go to Step 12.

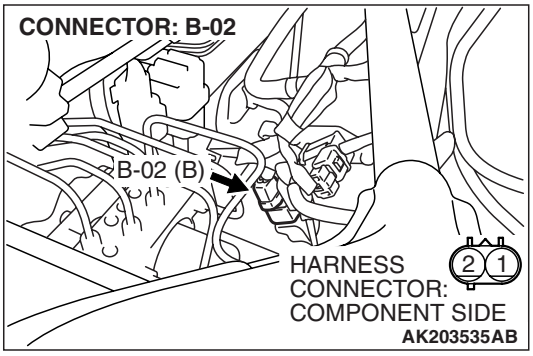

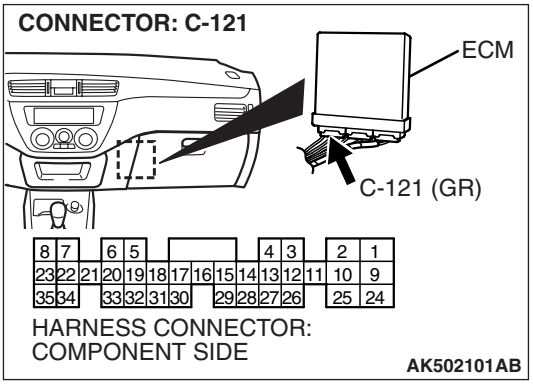

STEP 9. Check harness connector C-121 at ECM for damage.

Q: Is the harness connector in good condition?

YES : Go to Step 10.

NO : Repair or replace it. Refer to GROUP 00E, Harness Connector Inspection P.00E-2. Then go to Step 12.

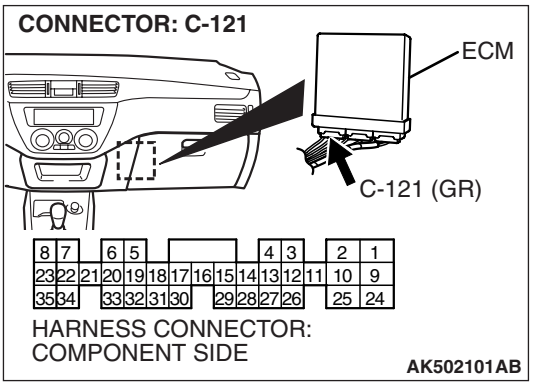

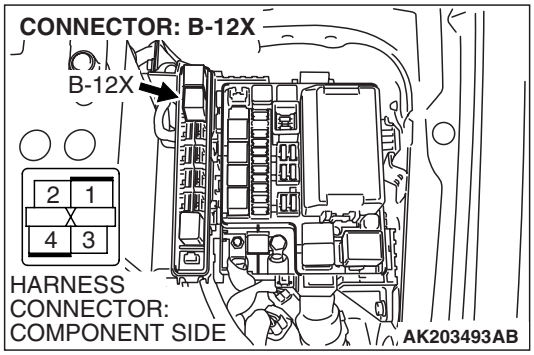

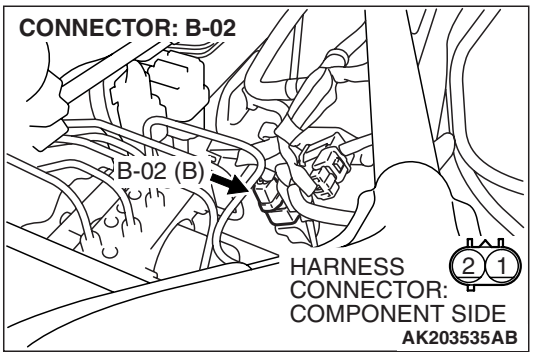

STEP 10. Check for harness damage between MFI relay connector B-12X (terminal No. 4) and evaporative emission purge solenoid connector B-02 (terminal No. 2).

Q: Is the harness wire in good condition?

YES : Go to Step 11.

NO : Repair it. Then go to Step 12.

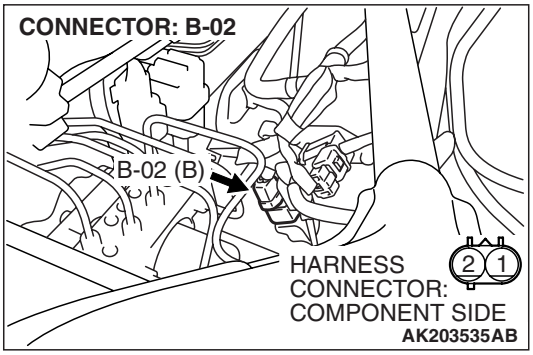

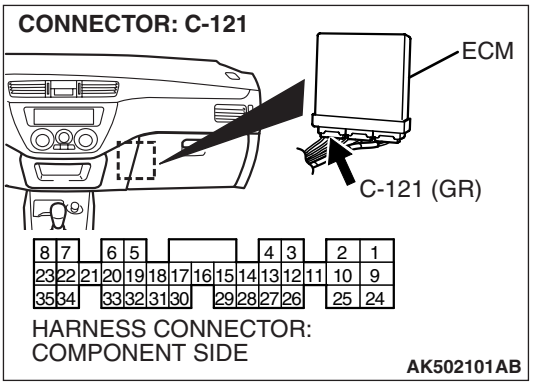

STEP 11. Check for harness damage between evaporative emission purge solenoid connector B-02 (terminal No. 1) and ECM connector C-121 (terminal No. 16).

Q: Is the harness wire in good condition?

YES : Replace the ECM. Then go to Step 12.

NO : Repair it. Then go to Step 12.

STEP 12. Test the OBD-II drive cycle.

(1) Carry out a test drive with the drive cycle pattern. Refer to GROUP 13A, Diagnostic Function –OBD-II Drive Cycle – Pattern 23 P.13A-12.

(2) Check the diagnostic trouble code (DTC).

Q: Is DTC P0443 set?

YES : Retry the troubleshooting.

NO : The inspection is complete.

DTC P0446: Evaporative Emission Control System Vent Control Circuit

Evaporative Emission Ventilation Solenoid Circuit

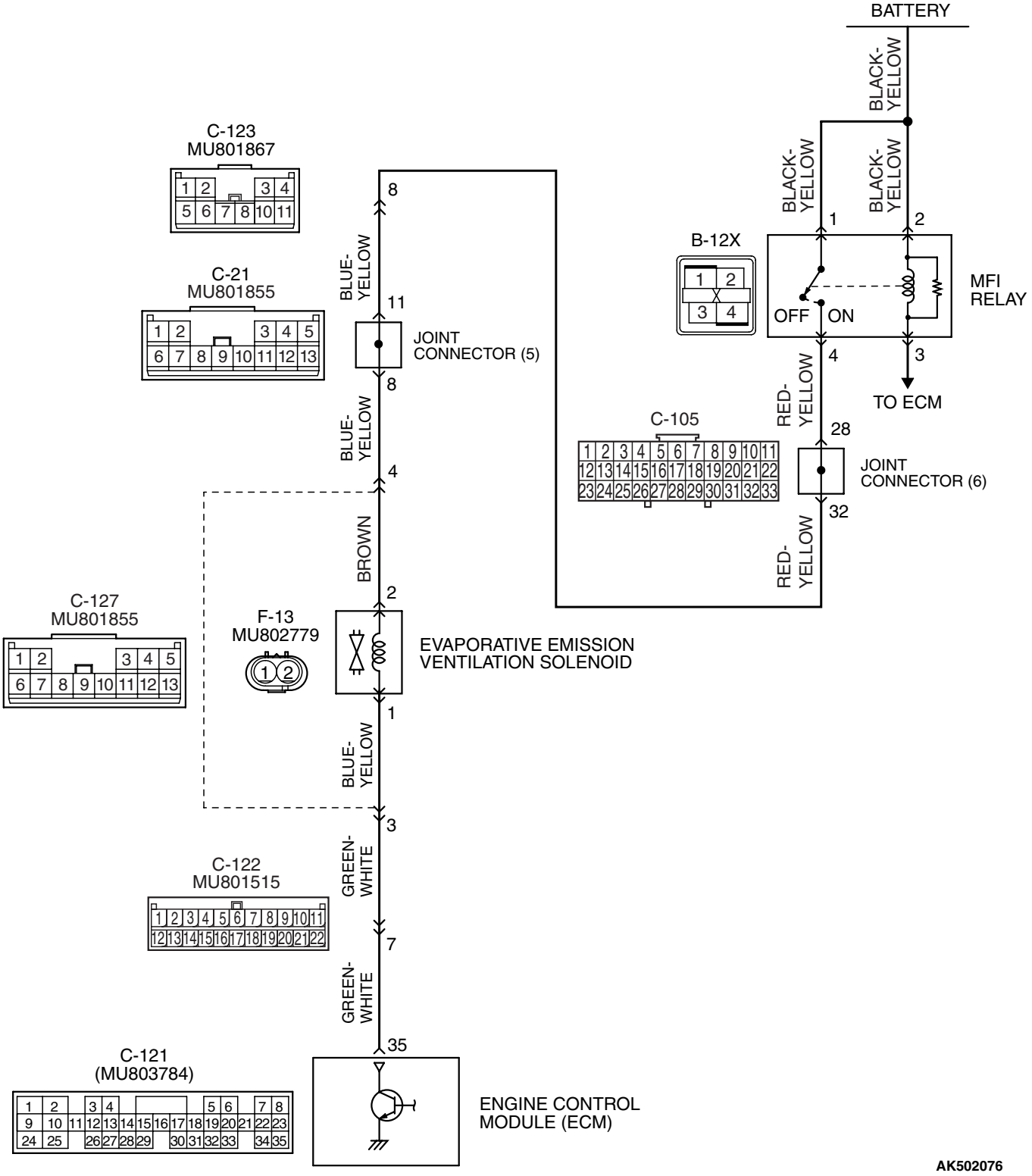

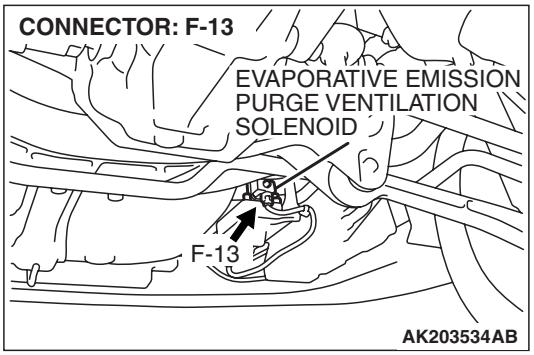

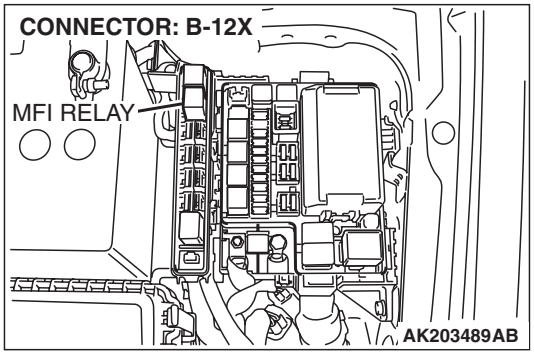

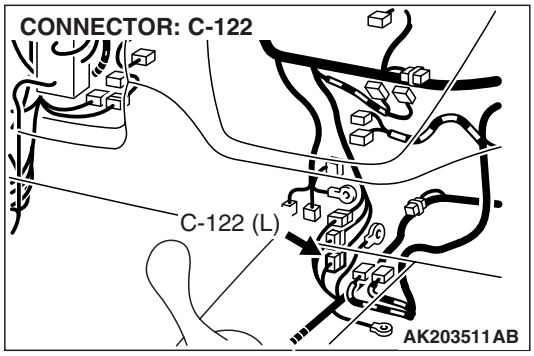

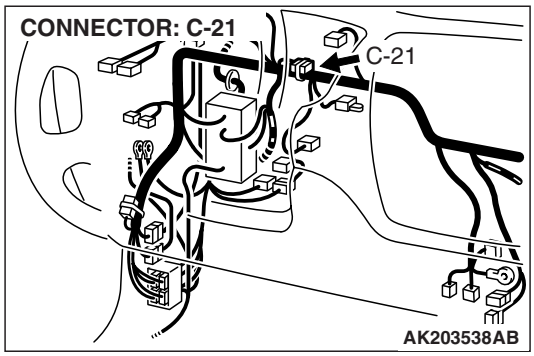

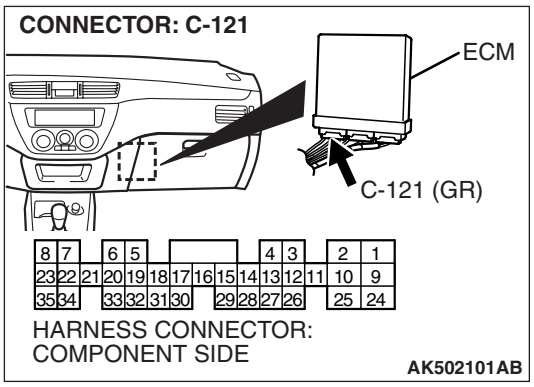

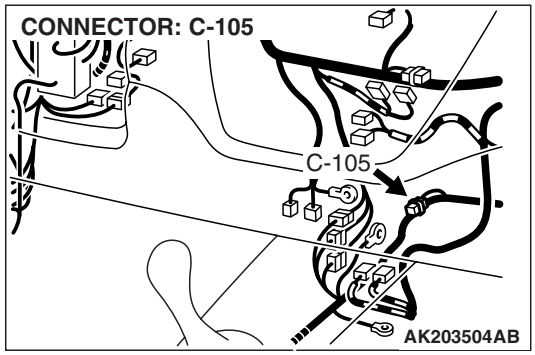

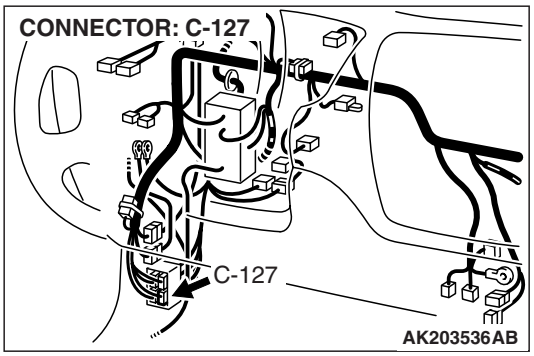

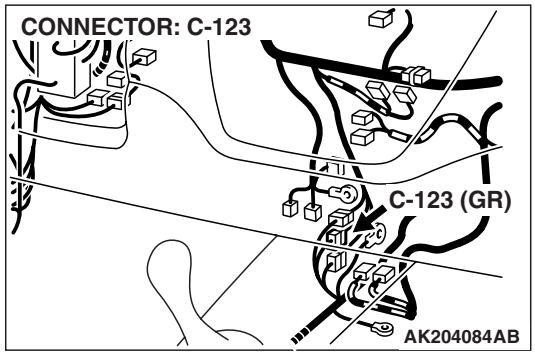

CIRCUIT OPERATION

- The evaporative emission ventilation solenoid power is supplied from the MFI relay (terminal No. 4).
- The ECM controls the evaporative emission ventilation solenoid ground by turning the power transistor in the ECM ON and OFF.

TECHNICAL DESCRIPTION

- To judge if there is open circuit in the evaporative emission ventilation solenoid drive circuit, ECM measures the surge voltage of the evaporative emission ventilation solenoid coil.
- The ECM drives the evaporative emission ventilation solenoid. After the solenoid is turned off, the ECM will check if the solenoid coil produces a surge voltage of 2 V or more.

DESCRIPTIONS OF MONITOR METHODS

- Off-surge does not occur after solenoid is operated on to off.

MONITOR EXECUTION

- Continuous

MONITOR EXECUTION CONDITIONS (Other monitor and Sensor)

Other Monitor (There is no temporary DTC stored in memory for the item monitored below)

- Not applicable

Sensor (The sensor below is determined to be normal)

- Not applicable

DTC SET CONDITIONS

Logic Flow Chart

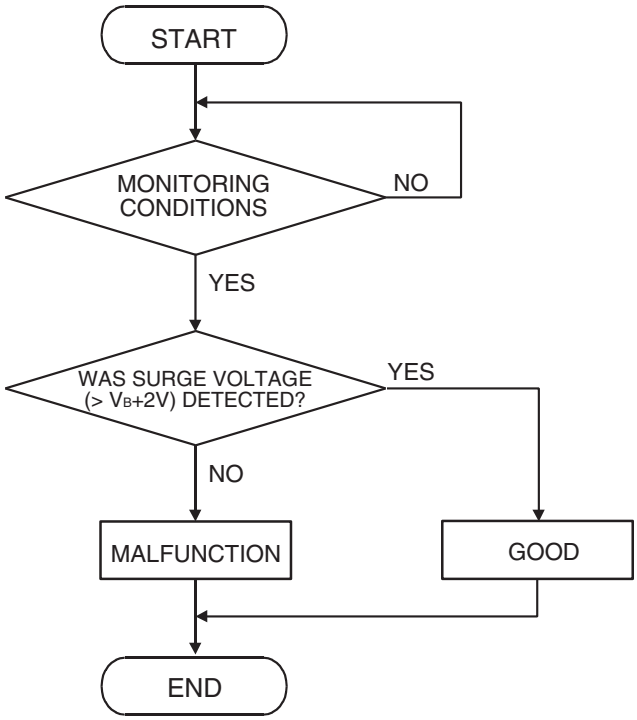

AK301449

Check Conditions

- Engine is being cranked.
- Battery positive voltage is at between 10 and 16.5 volts.

Judgment Criteria

- The evaporative emission ventilation solenoid coil surge voltage (battery positive voltage + 2 volts) is not detected for 0.2 second.
- The ECM monitors for this condition once during the drive cycle.

Check Conditions

- Battery positive voltage is at between 10 and 16.5 volts.
- ON duty cycle the evaporative emission purge solenoid is 0 percent.
- ON duty cycle of the EGR vacuum regulator solenoid valve is 0 percent.
- Evaporative emission ventilation solenoid is ON.
- More than 1 second has elapsed after the above mentioned conditions have been met.

Judgment Criterion

- The evaporative emission ventilation solenoid coil surge voltage (battery positive voltage + 2 volts) is not detected for 1 second. When the evaporative emission ventilation solenoid is turned OFF.

OBD-II DRIVE CYCLE PATTERN

Refer to Diagnostic Function –OBD-II Drive Cycle – Pattern 23 P.13A-12.

TROUBLESHOOTING HINTS (The most likely causes for this code to be set are:)

- Evaporative emission ventilation solenoid failed.
- Open or shorted evaporative emission ventilation solenoid circuit, harness damage, or connector damage.
- ECM failed.

DIAGNOSIS

Required Special Tools:

- MB991958: Scan Tool (M.U.T.-III Sub Assembly)
  - MB991824: V.C.I.
  - MB991827: USB Cable
  - MB991911: Main Harness B

STEP 1. Using scan tool MB991958, check actuator test item 29: Evaporative Emission Ventilation Solenoid.

⚠ CAUTION

To prevent damage to scan tool MB991958, always turn the ignition switch to the "LOCK" (OFF) position before connecting or disconnecting scan tool MB991958.

(1) Connect scan tool MB991958 to the data link connector.
(2) Turn the ignition switch to the "ON" position.
(3) Set scan tool MB991958 to the actuator test mode for item 29, Evaporative Emission Ventilation Solenoid.
  - An operation sound should be heard and vibration should be felt when the evaporative emission ventilation solenoid is operated.

(4) Turn the ignition switch to the "LOCK" (OFF) position.

Q: Is the solenoid operating properly?

YES : It can be assumed that this malfunction is intermittent. Refer to GROUP 00, How to Use Troubleshooting/Inspection Service Points –How to Cope with Intermittent Malfunctions P.00-13.

NO : Go to Step 2.

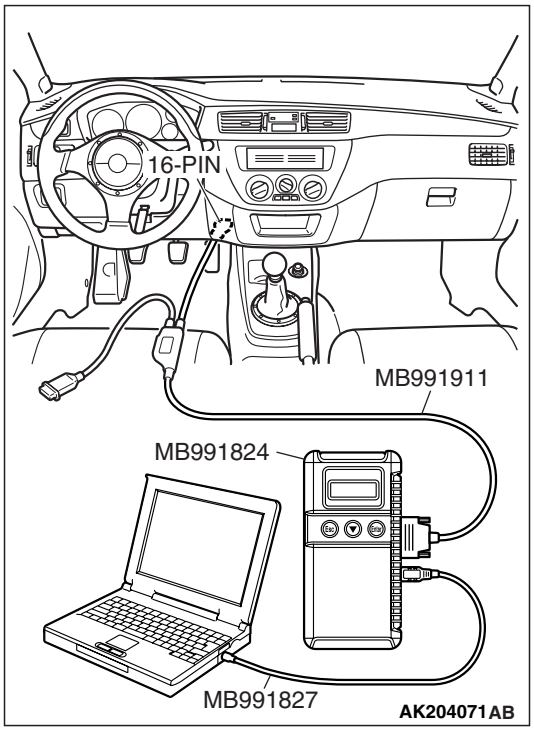

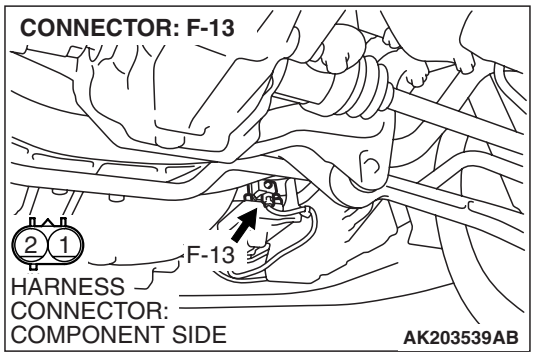

STEP 2. Check harness connector F-13 at the evaporative emission ventilation solenoid for damage.

Q: Is the harness connector in good condition?

YES : Go to Step 3.

NO : Repair or replace it. Refer to GROUP 00E, Harness Connector Inspection P.00E-2. Then go to Step 12.

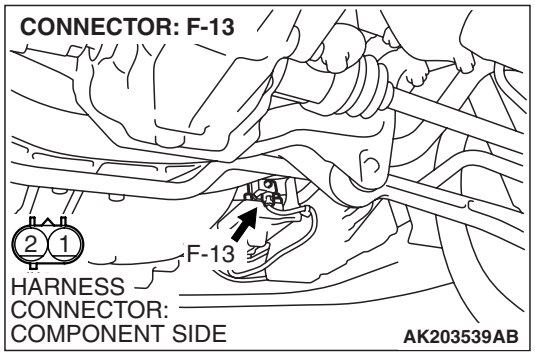

STEP 3. Check the evaporative emission ventilation solenoid.

(1) Disconnect the evaporative emission ventilation solenoid connector F-13.

(2) Measure the resistance between evaporative emission ventilation solenoid side connector terminal No. 1 and No. 2.

Standard value: 17 – 21 ohms [at 20° C (68° F)]

Q: Is the measured resistance between 17 and 21 ohms [at 20° C (68° F)]?

YES : Go to Step 4.

NO : Replace it. Then go to Step 12.

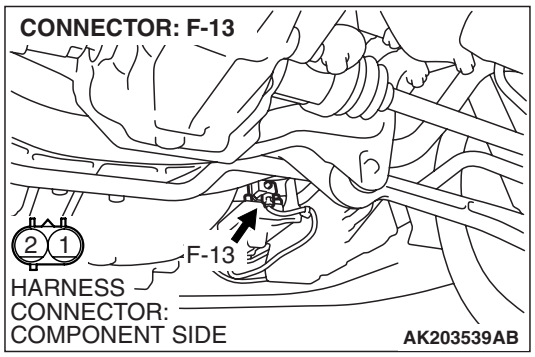

STEP 4. Measure the power supply voltage at evaporative emission ventilation solenoid harness side connector F-13.

(1) Disconnect connector F-13 and measure at the harness side.

(2) Turn the ignition switch to the "ON" position.

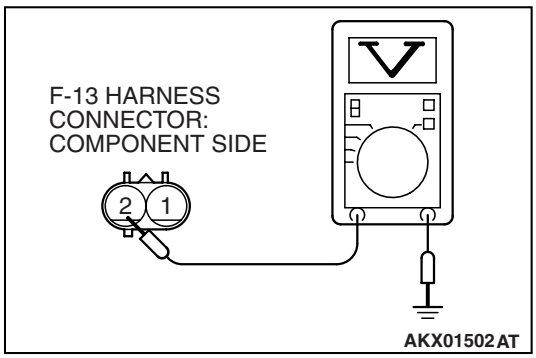

(3) Measure the voltage between terminal No. 2 and ground.
- Voltage should be battery positive voltage.

(4) Turn the ignition switch to the "LOCK" (OFF) position.

Q: Is battery positive voltage (approximately 12 volts) present?

YES : Go to Step 6.

NO : Go to Step 5.

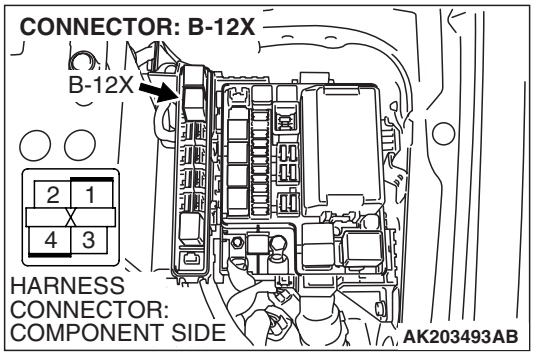

STEP 5. Check harness connector B-12X at MFI relay for damage.

Q: Is the harness connector in good condition?

YES : Check connectors C-21, C-105, C-123 and C-127 at intermediate connector for damage, and repair or replace as required. Refer to GROUP 00E, Harness Connector Inspection P.00E-2. If the intermediate connectors are in good condition, repair the eharness wire between MFI relay connector B-12X (terminal No. 4) and evaporative emission ventilation solenoid connector F-13 (terminal No. 2) because of open circuit or short circuit to ground. Then go to Step 12.

NO : Repair or replace it. Refer to GROUP 00E, Harness Connector Inspection P.00E-2. Then go to Step 12.

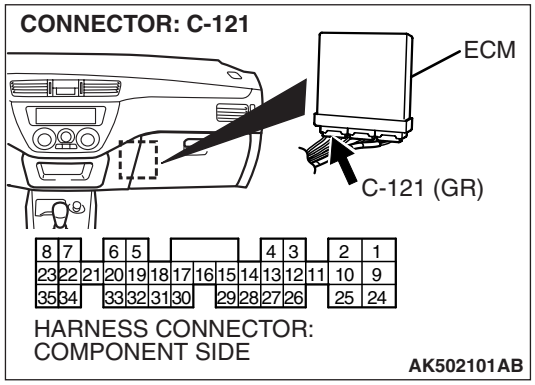

STEP 6. Measure the power supply voltage at ECM connector C-121 by backprobing.

(1) Do not disconnect connector C-121.

(2) Turn the ignition switch to the "ON" position.

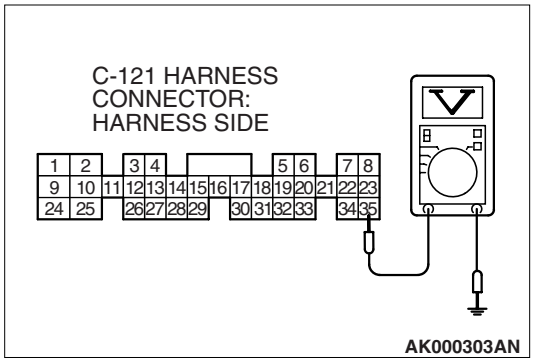

(3) Measure the voltage between terminal No. 35 and ground by backprobing.
- Voltage should be battery positive voltage.

(4) Turn the ignition switch to the "LOCK" (OFF) position.

Q: Is battery positive voltage (approximately 12 volts) present?

YES : Go to Step 9.

NO : Go to Step 7.

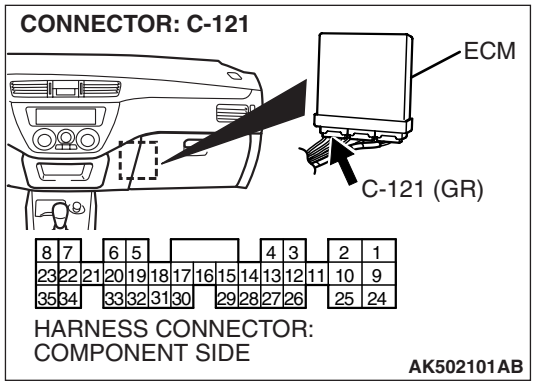

STEP 7. Check harness connector C-121 at ECM for damage.

Q: Is the harness connector in good condition?

YES : Go to Step 8.

NO : Repair or replace it. Refer to GROUP 00E, Harness Connector Inspection P.00E-2. Then go to Step 12.

STEP 8. Check for open circuit and short circuit to ground between evaporative emission ventilation solenoid connector F-13 (terminal No. 1) and ECM connector C-121 (terminal No. 35).

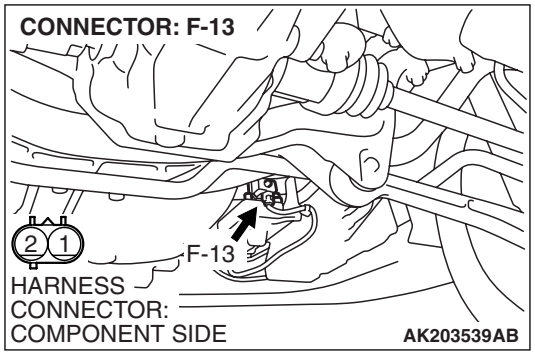

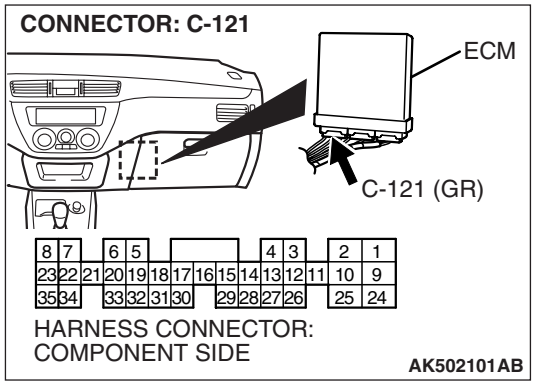

NOTE: Check harness after checking intermediate connectors C-122 and C-127. If the intermediate connectors are damaged, repair or replace them. Refer to GROUP 00E, Harness Connector Inspection P.00E-2. Then go to Step 12.

Q: Is the harness wire in good condition?

YES : Replace the ECM. Then go to Step 12.

NO : Repair it. Then go to Step 12.

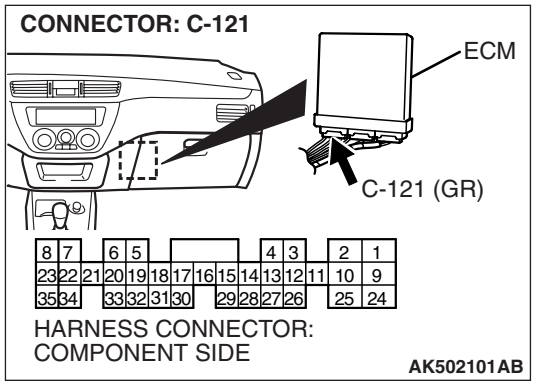

STEP 9. Check harness connector C-121 at ECM for damage.

Q: Is the harness connector in good condition?

YES : Go to Step 10.

NO : Repair or replace it. Refer to GROUP 00E, Harness Connector Inspection P.00E-2. Then go to Step 12.

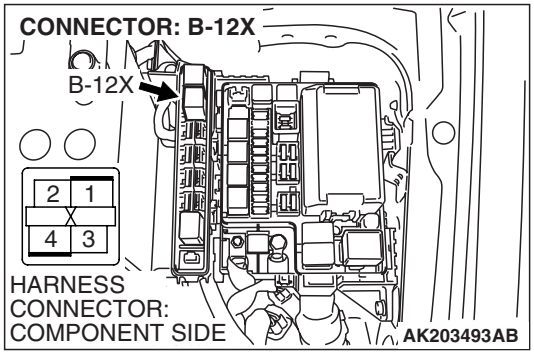

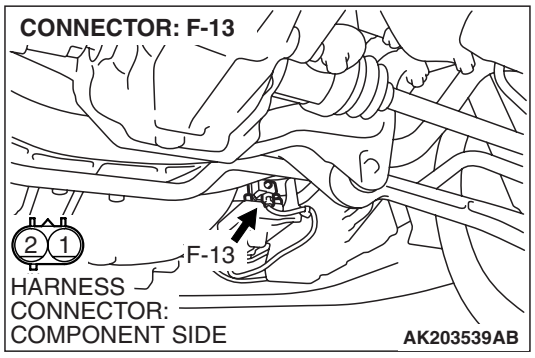

STEP 10. Check for harness damage between MFI relay connector B-12X (terminal No. 4) and evaporative emission ventilation solenoid connector F-13 (terminal No. 2).

NOTE: Check harness after checking intermediate connectors C-21, C-105, C-123 and C-127. If any of the intermediate connectors are damaged, repair or replace them. Refer to GROUP 00E, Harness Connector Inspection P.00E-2. Then go to Step 12.

Q: Is the harness wire in good condition?

YES : Go to Step 11.

NO : Repair it. Then go to Step 12.

STEP 11. Check for harness damage between evaporative emission ventilation solenoid connector F-13 (terminal No. 1) and ECM connector C-121 (terminal No. 35).

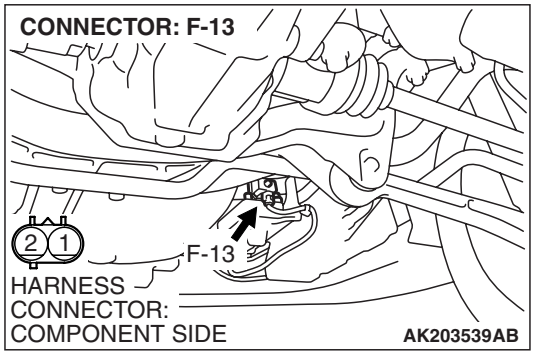

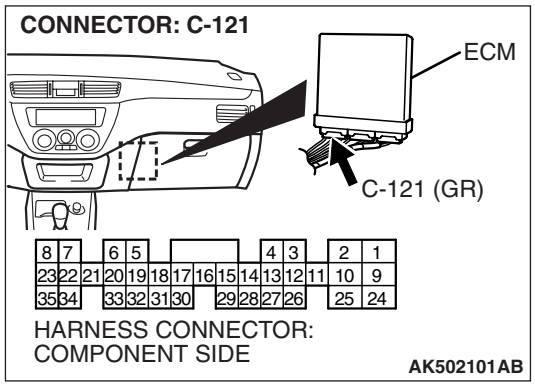

NOTE: Check harness after checking intermediate connectors C-122 and C-127. If any of the intermediate connectors are damaged, repair or replace them. Refer to GROUP 00E, Harness Connector Inspection P.00E-2. Then go to Step 12.

Q: Is the harness wire in good condition?

YES : Replace the ECM. Then go to Step 12.
NO : Repair it. Then go to Step 12.

STEP 12. Test the OBD-II drive cycle.

(1) Carry out a test drive with the drive cycle pattern. Refer to GROUP 13A, Diagnostic Function –OBD-II Drive Cycle – Pattern 23 P.13A-12.
(2) Check the diagnostic trouble code (DTC).

Q: Is DTC P0446 set?

YES : Retry the troubleshooting.
NO : The inspection is complete.

DTC P0450: Evaporative Emission System Pressure Sensor malfunction

SYSTEM DIAGRAM

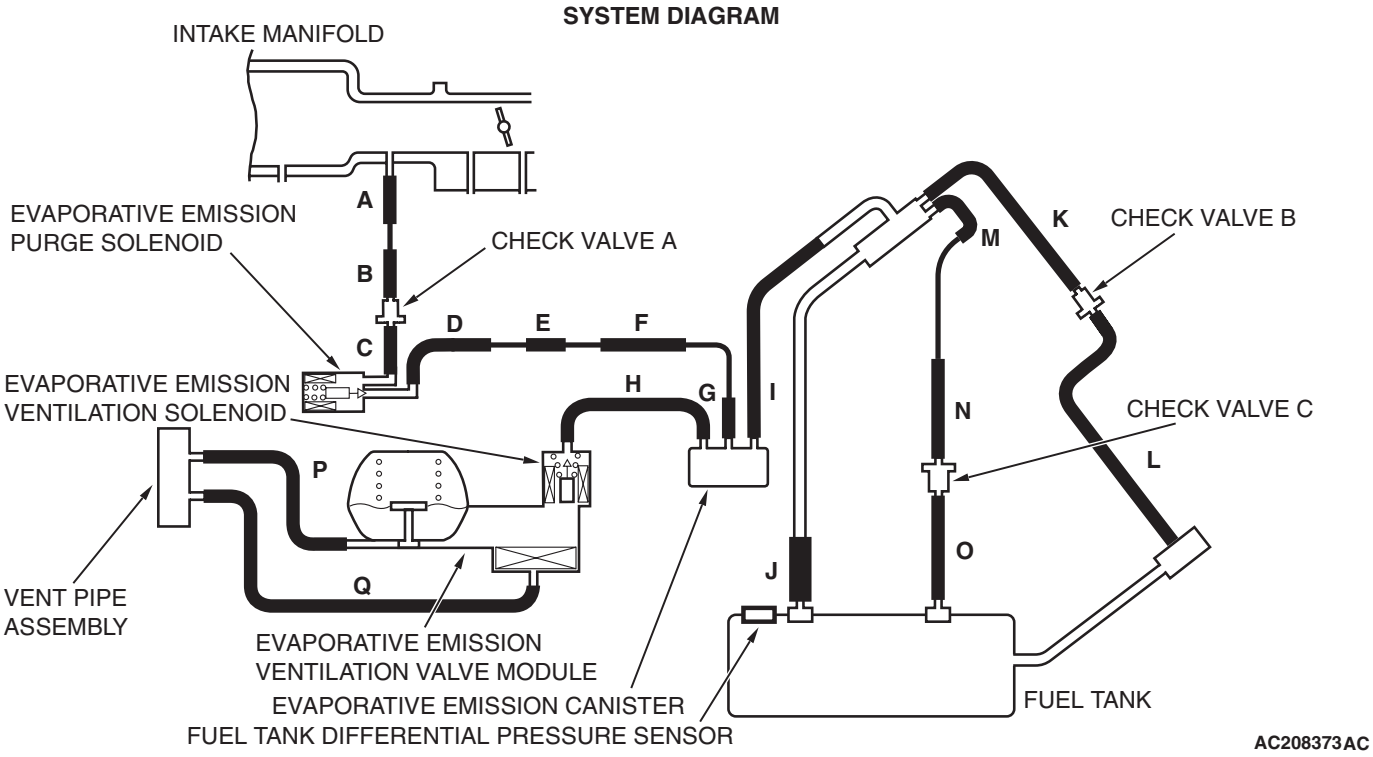

Fuel Tank Differential Pressure Sensor Circuit

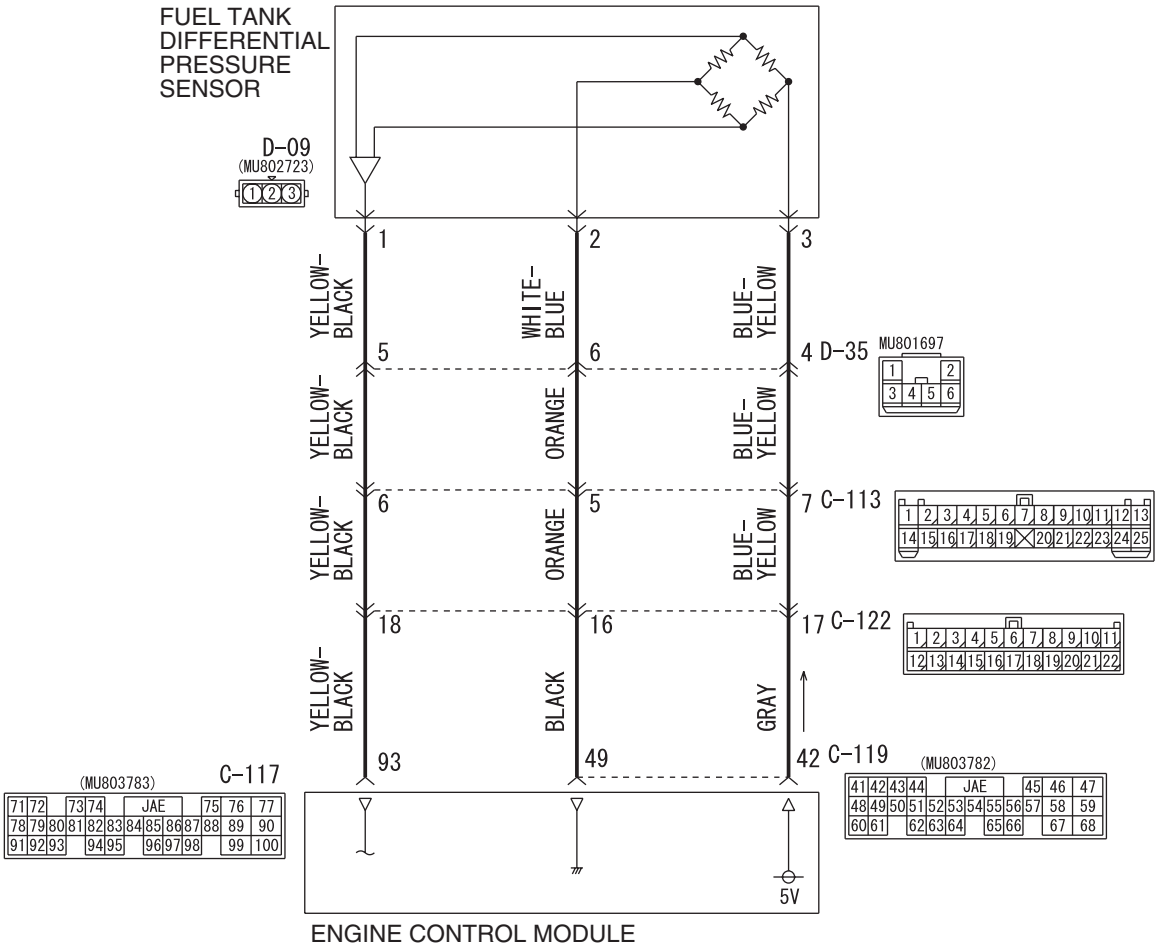

AC505150
W6J12M000A

CONNECTOR: C-113

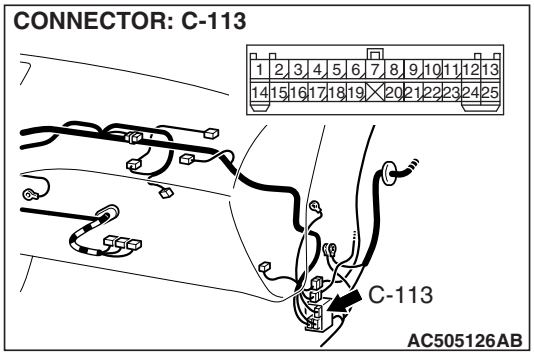

CONNECTORS: C-117, C-119

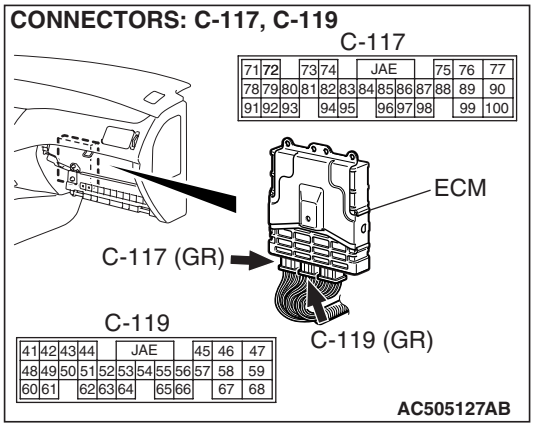

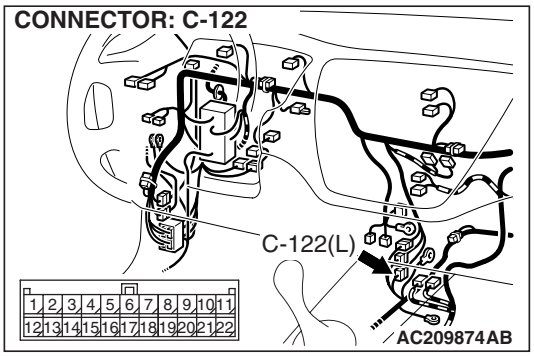

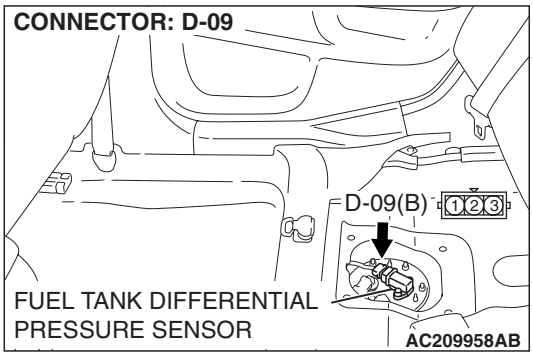

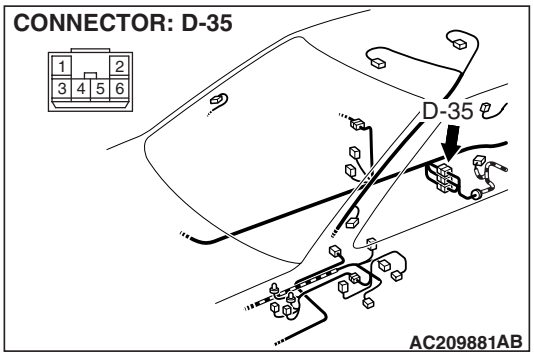

CIRCUIT OPERATION

- The ECM (terminal 42) supplies a 5-volt reference signal to the fuel tank differential pressure sensor (terminal 3). The ECM (terminal 49) supplies a ground to the fuel tank differential pressure sensor (terminal 2).
- The fuel tank differential pressure sensor (terminal 1) returns a voltage signal to the ECM (terminal 93) that is proportional to the pressure in the fuel tank.

TECHNICAL DESCRIPTION

- The ECM monitors the fuel tank differential pressure sensor output voltage.
- The ECM determines whether the fuel tank differential pressure sensor signal voltage is within normal operating parameters.

DESCRIPTIONS OF MONITOR METHODS

- Compare purge solenoid status with fuel tank differential pressure sensor output voltage.

MONITOR EXECUTION

Continuous.

MONITOR EXECUTION CONDITIONS (OTHER MONITOR AND SENSOR)

Other Monitor (There is no temporary DTC stored in memory for the item monitored below)

- Evaporative emission purge solenoid monitor
- Evaporative emission ventilation solenoid monitor
- Fuel level sensor monitor
- Fuel temperature sensor monitor

Sensor (The sensors below are determined to be normal)

- Volume airflow sensor
- Barometric pressure sensor
- Intake air temperature sensor
- Engine coolant temperature sensor

LOGIC FLOW CHARTS (Monitor Sequence)

RATIONALITY - HIGH/LOW

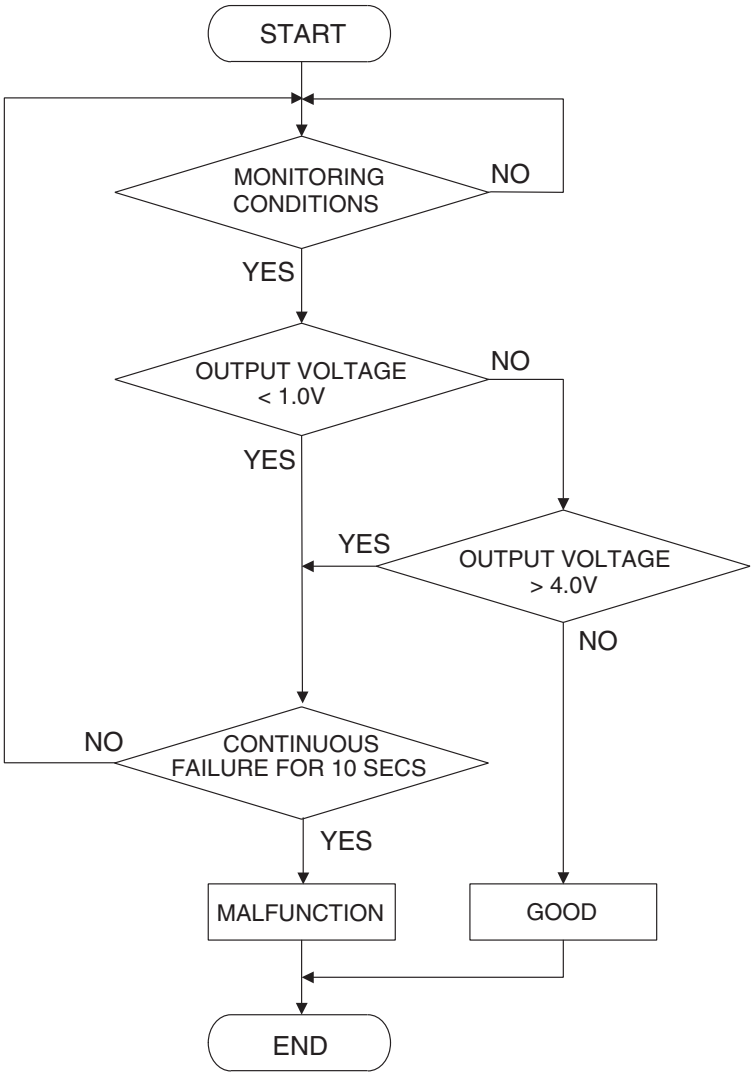

AC401446

DTC SET CONDITIONS

Check Conditions

- Intake air temperature is greater than 5° C (41° F).
- Engine speed is 1,600 r/min or greater.
- Volumetric efficiency is between 20 and 70 percent.

Judgment Criterion

- When the evaporative emission purge solenoid is off, the fuel differential pressure sensor output voltage remains 1.0 volt or less for ten seconds.

Check Conditions

- Intake air temperature is between 5° C (41° F) and 45° C (113° F) or greater.
- Engine speed is 1,600 r/min or greater.
- Volumetric efficiency is between 20 and 70 percent.

Judgment Criterion

- When the evaporative emission purge solenoid valve is fully operational (100 percent ratio), the fuel differential pressure sensor output voltage remains at 4.0 volts or greater for ten seconds.

OBD-II DRIVE CYCLE PATTERN

Refer to Diagnostic Function –OBD-II Drive Cycle – Pattern 5 P.13A-12.

TROUBLESHOOTING HINTS (THE MOST LIKELY CAUSES FOR THIS CODE TO BE SET ARE:)

- Malfunction of the fuel tank differential pressure sensor.
- A damaged harness in the fuel tank differential pressure sensor circuit.
- Malfunction of the ECM.

OVERVIEW OF TROUBLESHOOTING

- DTC P0450 can be set by a faulty fuel tank differential pressure sensor or related circuit, or ECM failure.
- To check for system blockage, do a performance test which uses a mechanical vacuum gauge and scan tool MB991958 set on the fuel tank differential pressure sensor (TANK PRS SNSR 73). The mechanical gauge reading is used to verify scan tool MB991958 reading. A comparison of the mechanical gauge with the reading on scan tool MB991958 will locate a problem in the system.

DIAGNOSIS

Required Special Tools:

- MB991958: Scan Tool (M.U.T.-III Sub Assembly)
  - MB991824: V.C.I.
  - MB991827: USB Cable
  - MB991911: Main Harness B
- MB991658: Test Harness Set

STEP 1. Using scan tool MB991958, check data list item 73: Fuel Tank Differential Pressure Sensor.

⚠ CAUTION

To prevent damage to scan tool MB991958, always turn the ignition switch to the "LOCK" (OFF) position before connecting or disconnecting scan tool MB991958.

(1) Connect scan tool MB991958 to the data link connector.

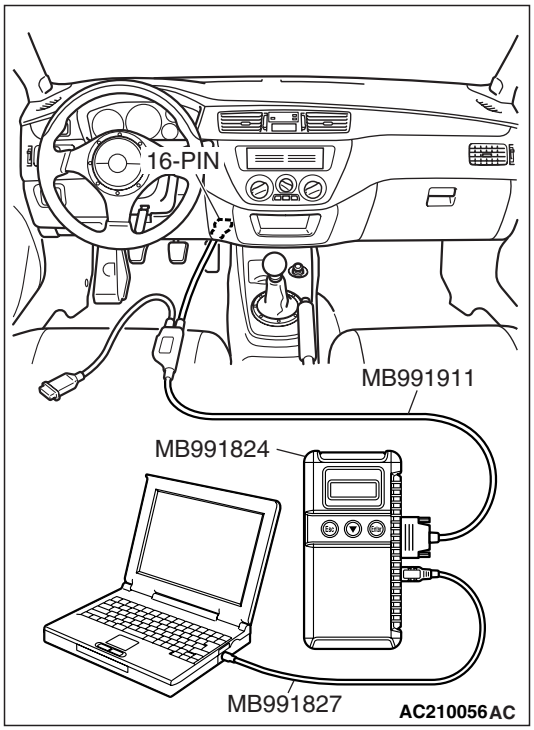

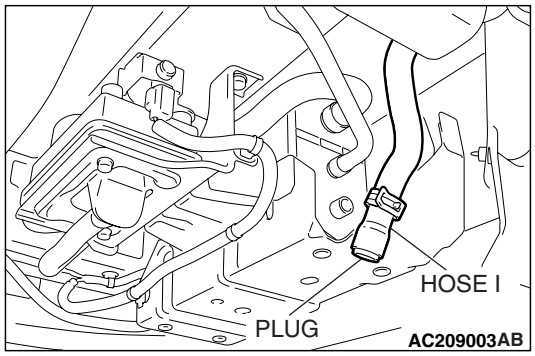

(2) Disconnect hose I from the evaporative emission canister, and plug the hose.
(3) Set scan tool MB991958 to the data reading mode for item 73, Fuel Tank Differential Pressure Sensor.
- The fuel tank pressure reading on the scan tool should be –1.5 to 1.5 kPa (–0.443 to 0.443 inHg).

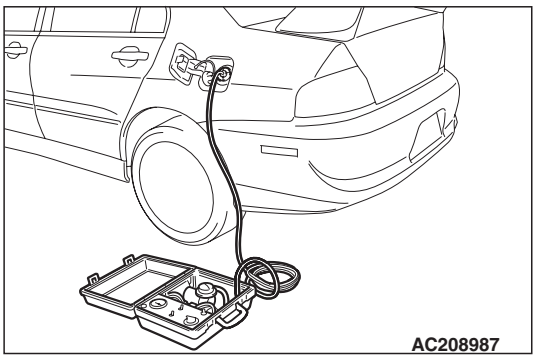

(4) Connect an evaporative emission system pressure pump (Miller number 6872A) to the fuel tank filler tube and pressurize the fuel tank.
- The fuel tank pressure reading should increase.

(5) Turn the ignition switch to the "LOCK" (OFF) position. Then disconnect scan tool MB991958.
(6) Disconnect the evaporative emission system pressure pump, and reinstall the fuel cap.
(7) Connect hose I to the canister.

Q: Is the fuel tank pressure between –1.5 and 1.5 kPa (–0.443 and 0.443 inHg)?

YES : It can be assumed that this malfunction is intermittent. Refer to GROUP 00, How to Use Troubleshooting/Inspection Service Points – Intermittent Malfunction P.00-13. Go to Step 15.

NO : Go to Step 2.

STEP 2. Measure the signal voltage at fuel tank differential pressure sensor connector D-09.

(1) Remove the rear seat assembly (Refer to GROUP 52A, Rear Seat P.52A-22).
(2) Remove the floor pan access panel.

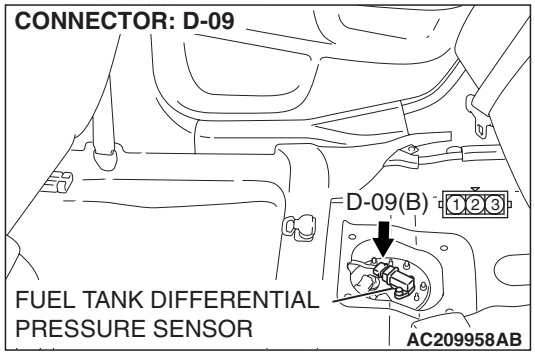

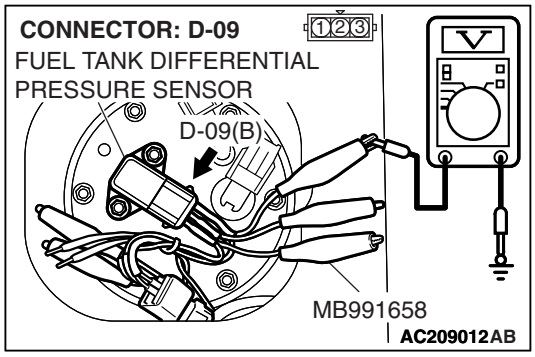

(3) Use special tool MB991658 to connect terminals 1,2 and 3 of the fuel tank differential pressure sensor connector D-09.
(4) Turn the ignition switch to the "ON" position.
(5) Remove the fuel cap.
(6) Measure the voltage between connector D-09 terminal 1 and ground.
- The measured voltage should measure between 2.0 and 3.0 volts.

(7) Turn the ignition switch to the "LOCK" (OFF) position.

Q: Is the measured voltage between 2.0 and 3.0 volts?

YES : Go to Step 3.
NO : Go to Step 7.

STEP 3. Measure the signal voltage at ECM connector C-117 by backprobing.

(1) Do not disconnect ECM connector C-117.
(2) Turn the ignition switch to the "ON" position.
(3) Remove the fuel cap.

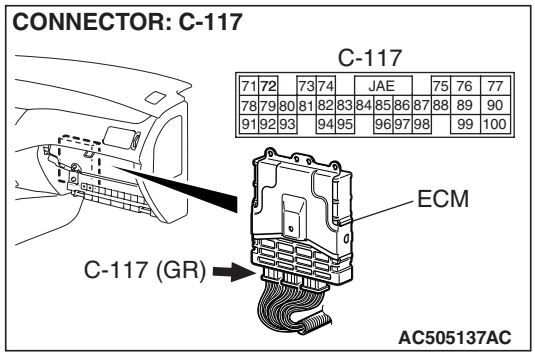

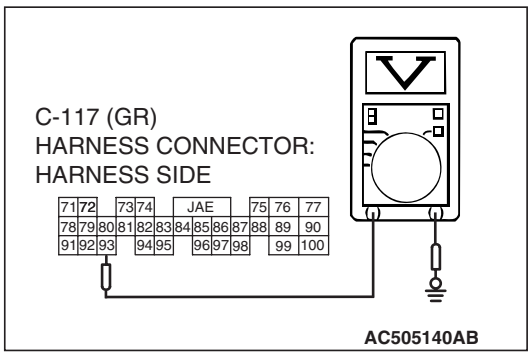

(4) Measure the voltage between connector C-117 terminal 93 and ground by backprobing.
- The measured voltage should measure between 2.0 to 3.0 volts.

(5) Turn the ignition switch to the "LOCK" (OFF) position.

Q: Is the measured voltage between 2.0 and 3.0 volts?

YES : Go to Step 4.
NO : Go to Step 5.

STEP 4. Using scan tool MB991958, check data list item 73: Fuel Tank Differential Pressure Sensor.

⚠ CAUTION

To prevent damage to scan tool MB991958, always turn the ignition switch to the "LOCK" (OFF) position before connecting or disconnecting scan tool MB991958.

(1) Connect scan tool MB991958 to the data link connector.

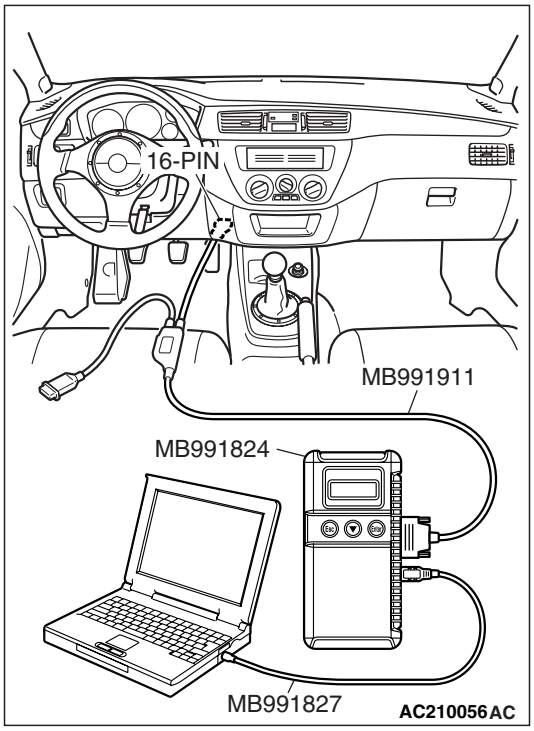

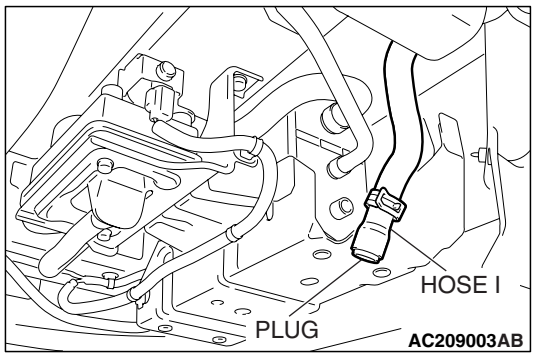

(2) Disconnect hose I from the evaporative emission canister, and plug the hose.
(3) Turn the ignition switch to the "ON" position.
(4) Remove the fuel cap.
(5) Set scan tool MB991958 to the data reading mode for item 73, Fuel Tank Differential Pressure Sensor.
   - The fuel tank pressure reading on the scan tool should be –1.5 to 1.5 kPa (–0.443 to 0.443 inHg).

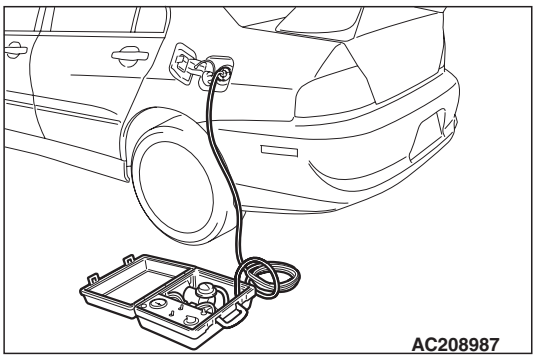

(6) Connect an evaporative emission system pressure pump (Miller number 6872A) to the fuel tank filler tube and pressurize the fuel tank.
   - The fuel tank pressure reading should increase.
(7) Turn the ignition switch to the "LOCK" (OFF) position.
(8) Disconnect the evaporative emission system pressure pump, and reinstall the fuel cap.
(9) Connect hose I to the canister.

Q: Is the fuel tank pressure between –1.5 and 1.5 kPa (–0.443 and 0.443 inHg)?

YES : It can be assumed that this malfunction is intermittent. Refer to GROUP 00, How to Use Troubleshooting/Inspection Service Points – Intermittent Malfunction P.00-13. Go to Step 15.

NO : Replace the ECM. Go to Step 15.

STEP 5. Check intermediate connectors C-113, C-122 and D-35, and ECM connector C-117, and fuel tank differential pressure sensor connector D-09 for loose, corroded or damaged terminals, or terminals pushed back in the connector.

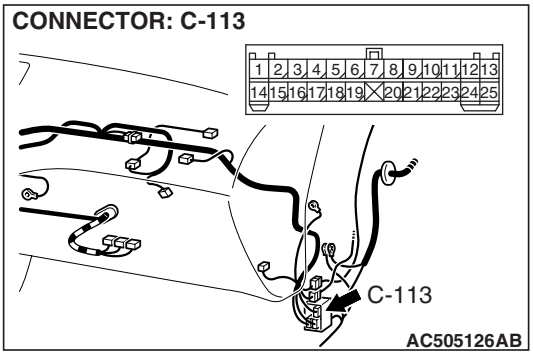

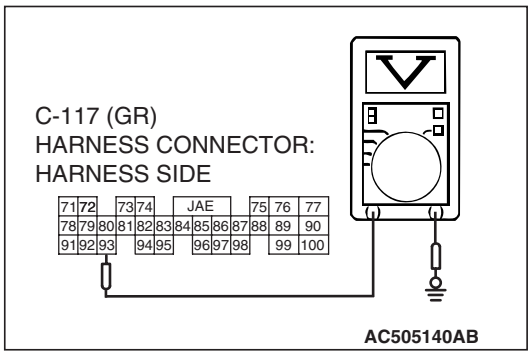

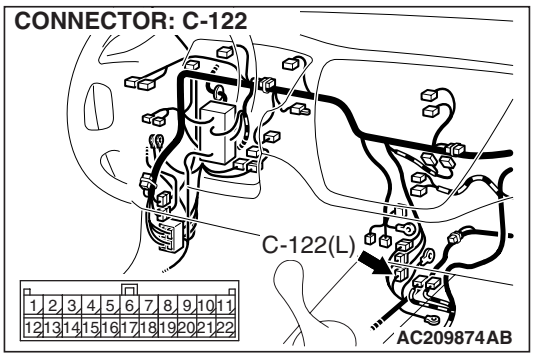

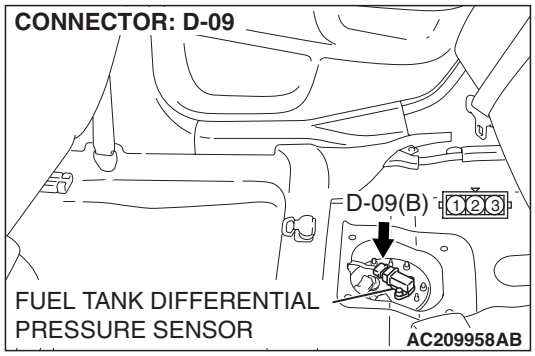

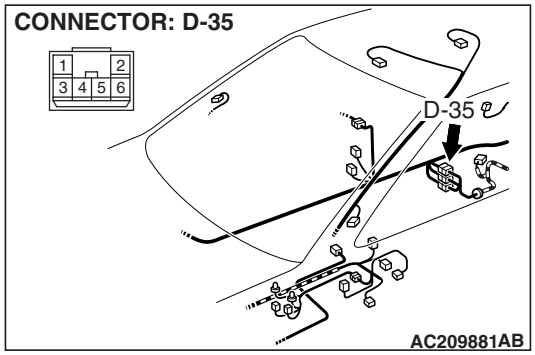

Q: Are the connectors in good condition?

YES : Go to Step 6.

NO : Repair or replace the faulty components. Refer to GROUP 00E, Harness Connector Inspection P.00E-2. Go to Step 15.

STEP 6. Check the harness wire between ECM connector C-117 terminal 93 and intermediate connector D-09 terminal 1 for damage.

Q: Is the harness wire in good condition?

YES : This malfunction is intermittent. Refer to GROUP 00, How to Use Troubleshooting/Inspection Service Points - How to Cope with Intermittent Malfunction P.00-13. Go to Step 15.

NO : Repair the damaged harness wire. Go to Step 15.

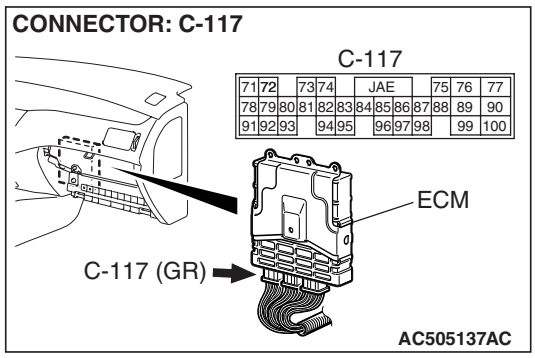

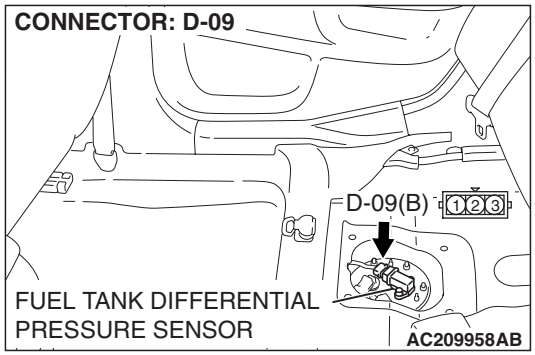

STEP 7. Measure the 5-volts reference signal at fuel tank differential pressure sensor connector D-09.

(1) Disconnect fuel tank differential pressure sensor connector D-09.

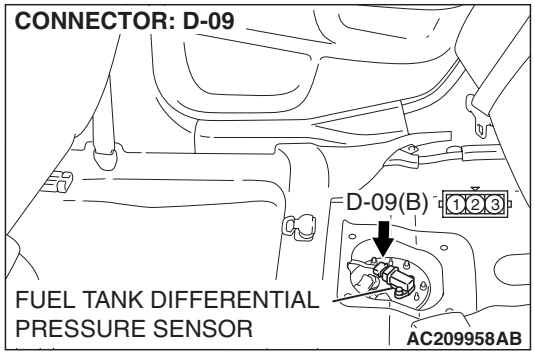

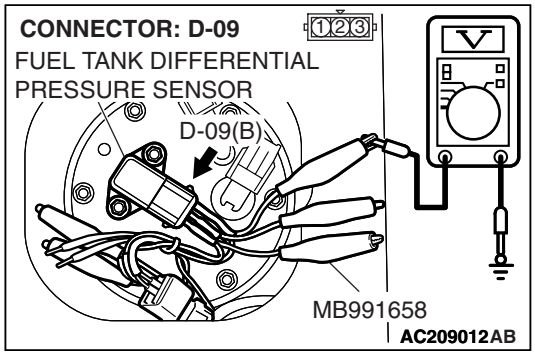

(2) Use special tool MB991658 to connect terminals 1, 2 and 3 of connector D-09.
(3) Turn the ignition switch to the "ON" position.
(4) Measure the voltage between terminal 3 and ground.
- The voltage should measure between 4.9 and 5.1 volts.

(5) Turn the ignition switch to the "LOCK" (OFF) position.

Q: Is the measured voltage between 4.9 and 5.1 volts?

YES : Go to Step 8.
NO : Go to Step 11.

STEP 8. Measure the return circuit voltage at fuel tank differential pressure sensor connector D-09.

(1) Disconnect fuel tank differential pressure sensor connector D-09.

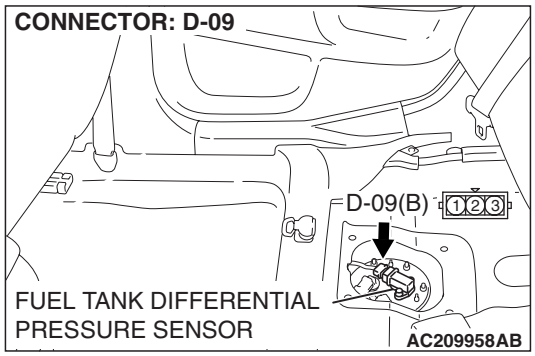

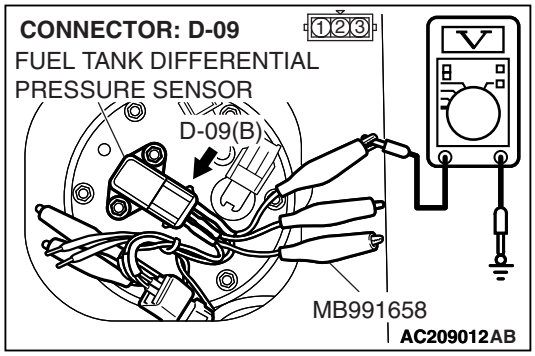

(2) Use special tool MB991658 to connect terminal 3 of connector D-09.
(3) Turn the ignition switch to the "ON" position.
(4) Measure the voltage between terminal 2 and ground.
- The voltage should measure 0.5 volt or less.

(5) Turn the ignition switch to the "LOCK" (OFF) position.

Q: Is the measure voltage 0.5 volt or less?

YES : Go to Step 9.
NO : Replace the fuel tank differential pressure sensor. Go to Step 15.

STEP 9. Check intermediate connectors C-113, C-122 and D-35, and ECM connector C-117,C-119 and fuel tank differential pressure sensor connector for D-09 loose, corroded or damaged terminals, or terminals pushed back in the connector.

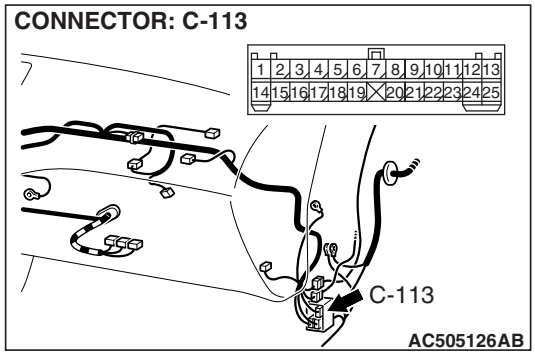

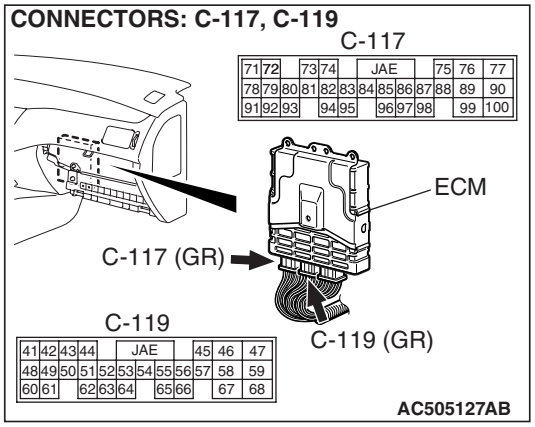

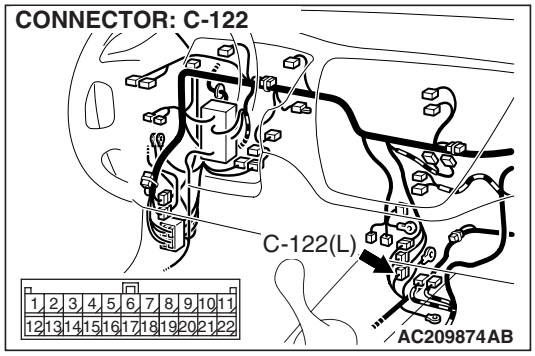

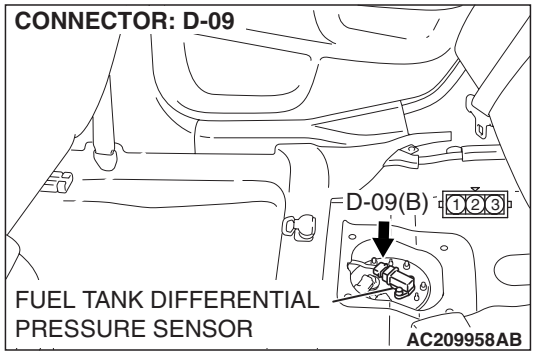

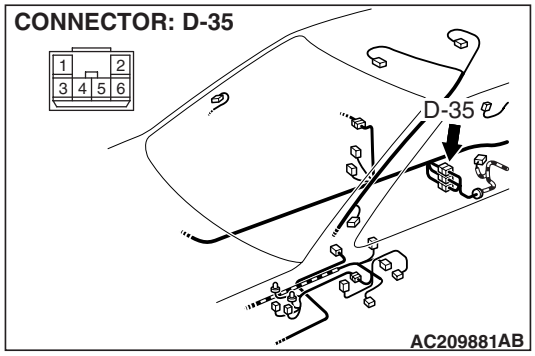

Q: Are the connectors and terminals in good condition?

YES : Go to Step 10.

NO : Repair or replace the damage components. Refer to GROUP 00E, Harness Connector Inspection P.00E-2. Go to Step 15.

STEP 10. Check the harness wire between ECM connector C-119 terminal 49 and fuel tank differential pressure sensor connector D-09 terminal 2 for damage.

Q: Is the harness wire in good condition?

YES : Replace the fuel tank differential pressure sensor. Go to Step 15.

NO : Repair or replace the harness wire. Go to Step 15.

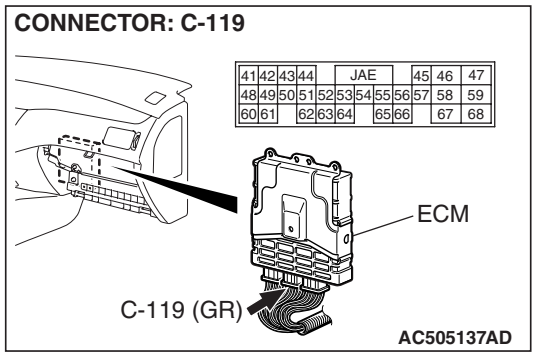

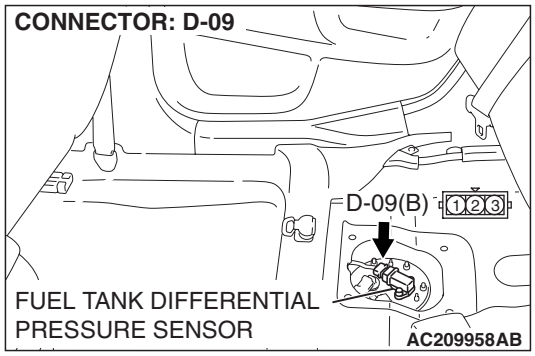

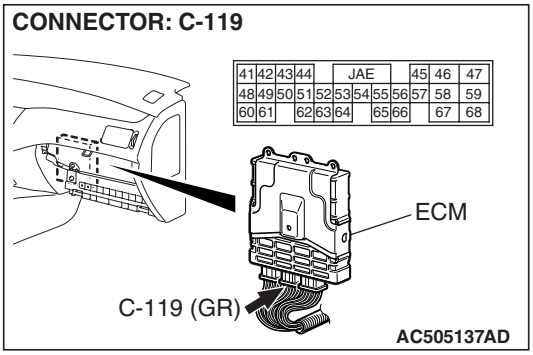

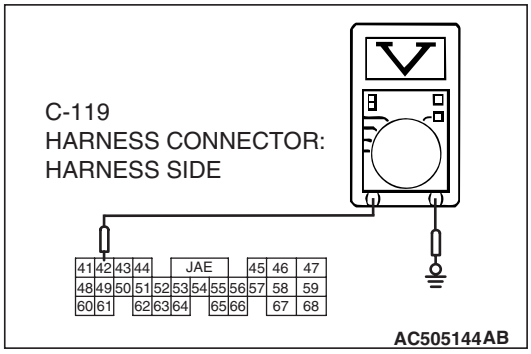

STEP 11. Measure the 5-volts reference signal at ECM connector C-119 by backprobing.

(1) Turn the ignition switch to the "ON" position.

(2) Measure the voltage between connector C-119 terminal 42 and ground by backprobing.

- The measured voltage should measure between 4.9 and 5.1 volts.

(3) Turn the ignition switch to the "LOCK" (OFF) position.

Q: Is the measured voltage between 4.9 and 5.1 volts?

YES : Go to Step 12.

NO : Go to Step 14.

STEP 12. Check intermediate connectors C-113, C-122 and D-35, and ECM connector C-119 and fuel tank differential pressure sensor connector for D-09 loose, corroded or damaged terminals, or terminals pushed back in the connector.

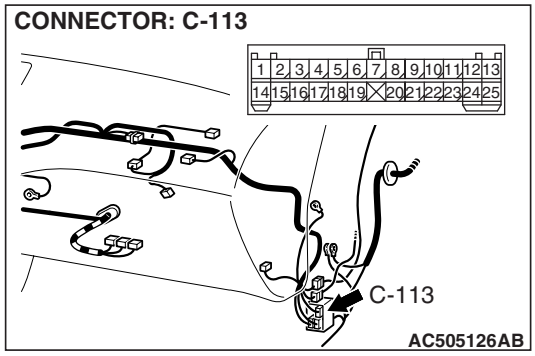

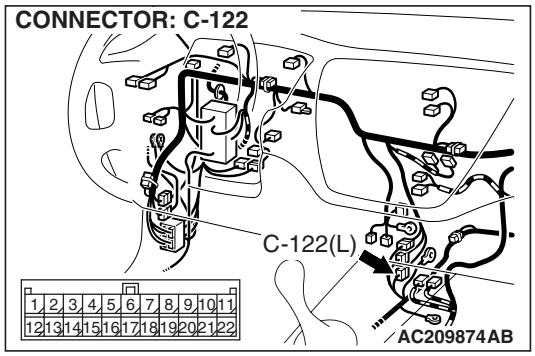

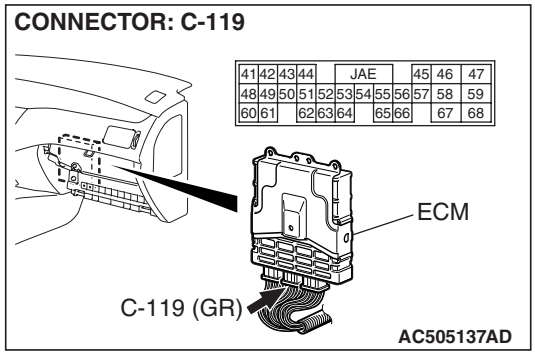

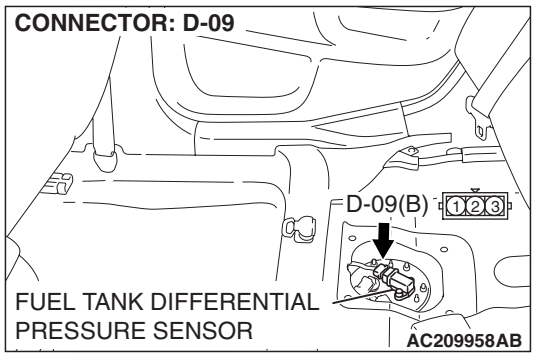

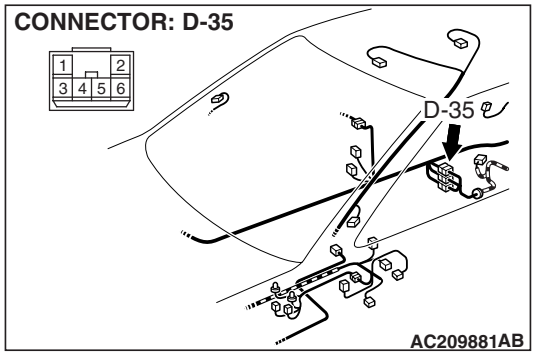

Q: Are the connectors and terminals in good condition?

YES : Go to Step 13.

NO : Repair or replace the faulty component. Go to Step 15.

STEP 13. Check the harness wire between ECM connector C-119 terminal 42 and fuel tank differential pressure sensor connector D-09 terminal 3 for damage.

Q: Is the harness wire in good condition?

YES : It can be assumed that this malfunction is intermittent. Refer to GROUP 00, How to Use Troubleshooting/Inspection Service Points - How to Cope with intermittent Malfunction P.00-13. Go to Step 15.

NO : Repair or replace the harness wire. Go to Step 15.

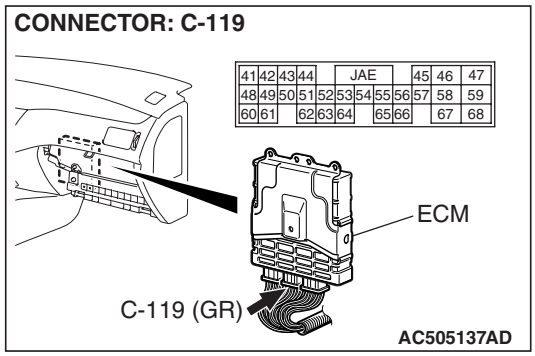

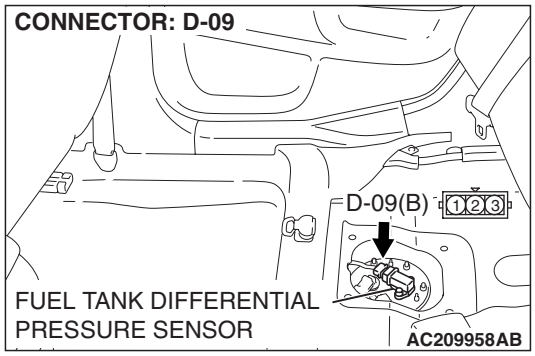

STEP 14. Check ECM connector C-119 for loose, corroded or damaged terminals, or terminals pushed back in the connector.

Q: Are the connector and terminals in good condition?

YES : Replace the ECM. Go to Step 15.

NO : Repair or replace the damaged components. Refer to GROUP 00E, Harness Connector Inspection P.00E-2. Go to Step 15.

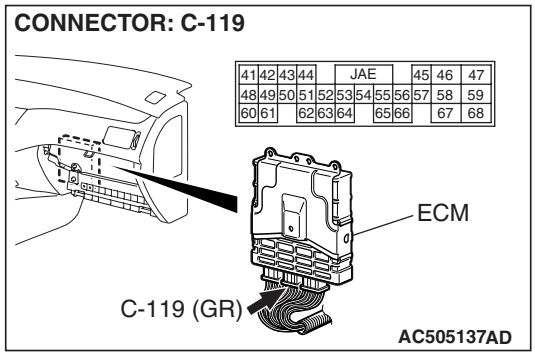

STEP 15. Perform the OBD-II drive cycle.

(1) Carry out a test drive with the drive cycle pattern. Refer to Diagnostic Function –OBD-II Drive Cycle –Pattern 5 P.13A-12.

(2) Read the diagnostic trouble code (DTC).

Q: Is DTC P0450 set?

YES : Go to Step 2.

NO : The procedure is complete.

DTC P0451: Evaporative Emission System Pressure Sensor Range/Performance

SYSTEM DIAGRAM

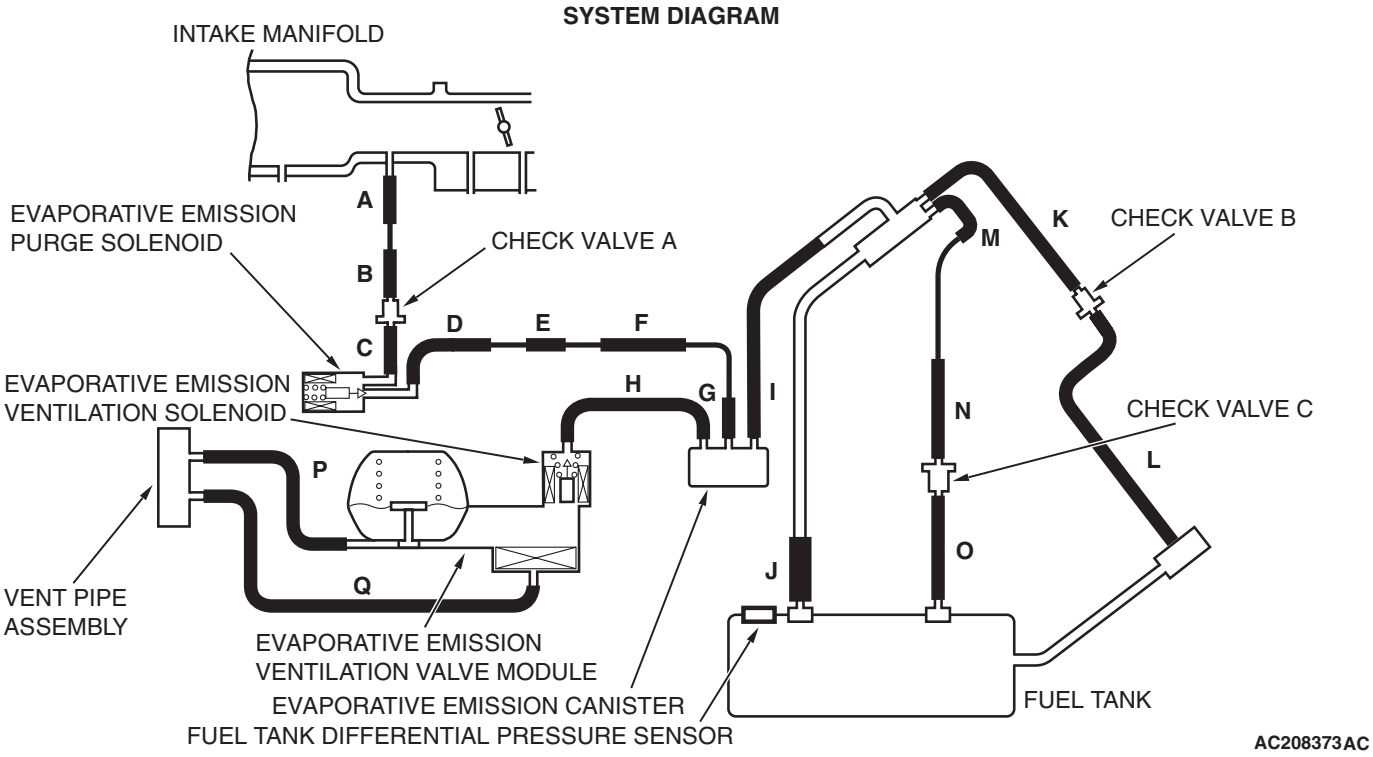

Fuel Tank Differential Pressure Sensor Circuit

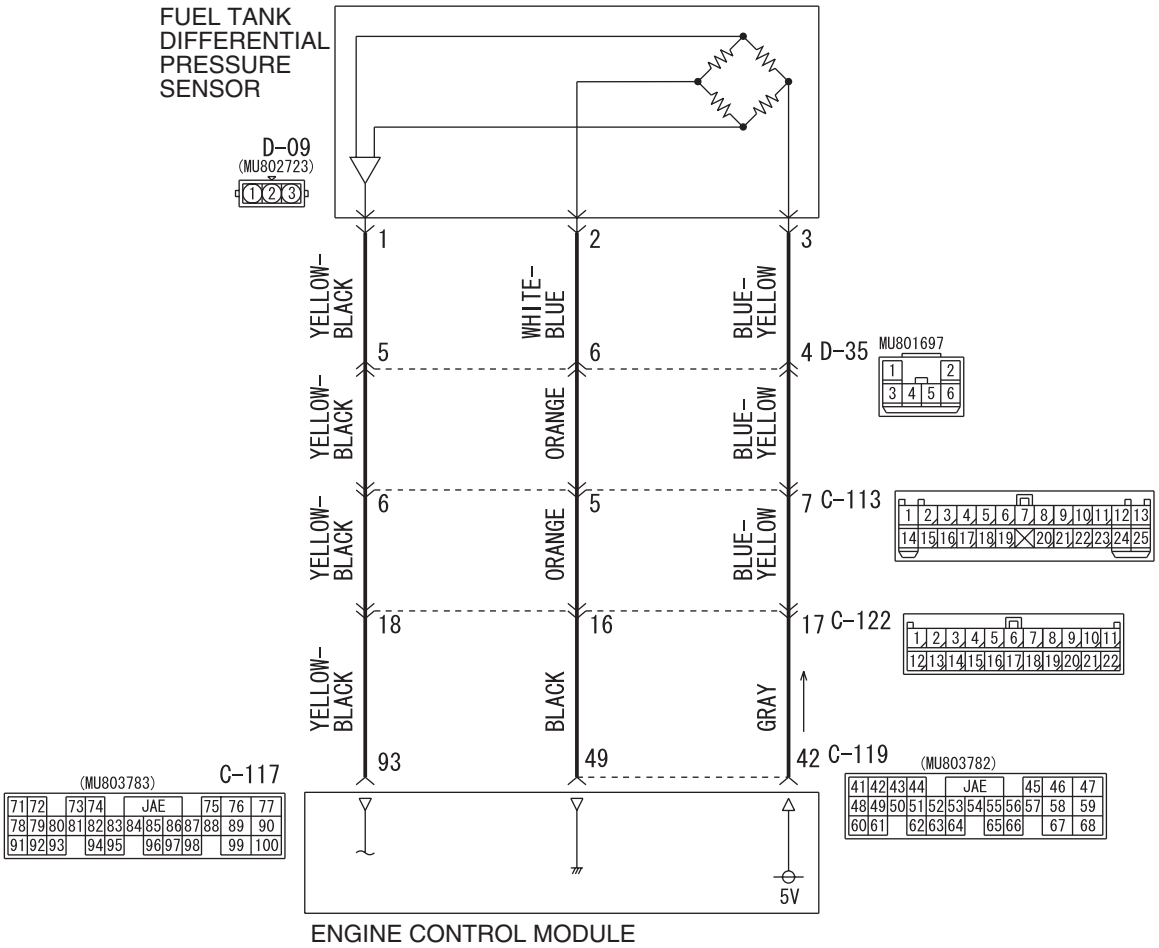

AC505150
W6J12M000A

CONNECTOR: C-113

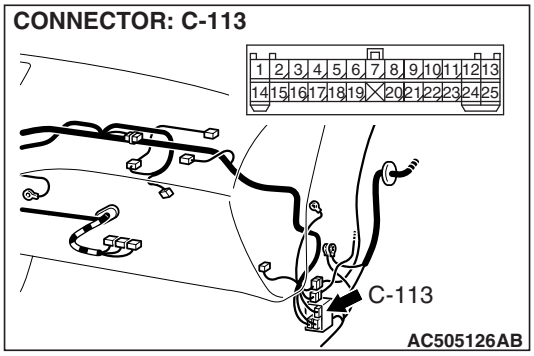

CONNECTORS: C-117, C-119

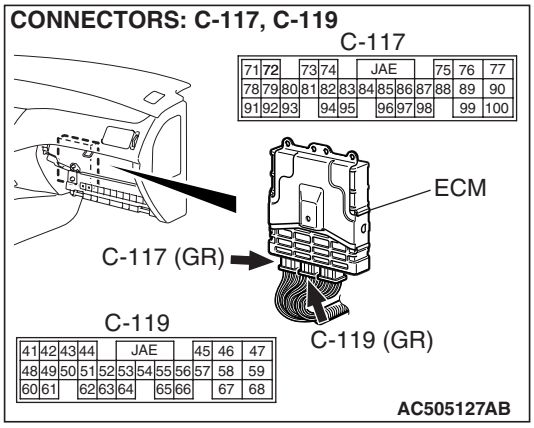

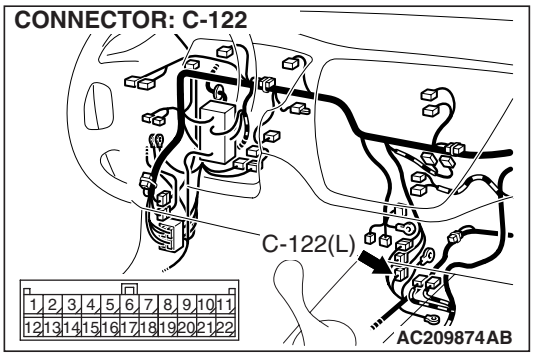

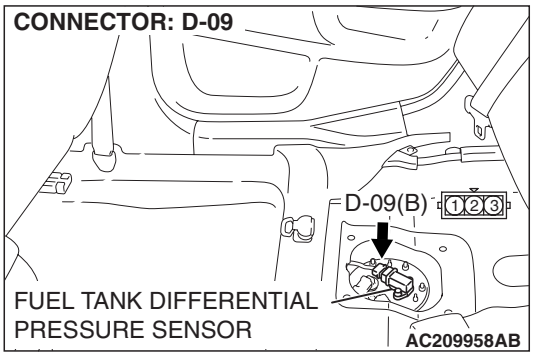

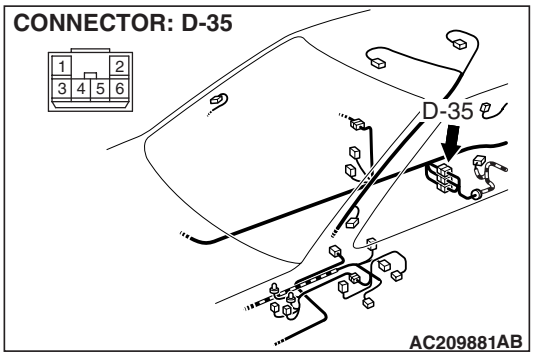

CIRCUIT OPERATION

- The ECM (terminal 42) supplies a 5-volts reference signal to the fuel tank differential pressure sensor (terminal 3). The fuel tank differential pressure sensor (terminal 2) is grounded through the ECM (terminal 49).
- The fuel tank differential pressure sensor (terminal 1) returns a voltage signal to the ECM (terminal 93) that is proportional to the pressure in the fuel tank.

TECHNICAL DESCRIPTION

- The ECM monitors the fuel tank differential pressure sensor signal voltage.
- The ECM determines whether the fuel tank differential pressure sensor signal voltage is within normal operating parameters.

DESCRIPTIONS OF MONITOR METHODS

- Detect malfunction if change of fuel tank differential pressure sensor output voltage during idling stays large during specified go/stop operations.

MONITOR EXECUTION

Immediately.

MONITOR EXECUTION CONDITIONS (OTHER MONITOR AND SENSOR)

Other Monitor (There is no temporary DTC stored in memory for the item monitored below)

- Evaporative emission purge solenoid monitor
- Evaporative emission ventilation solenoid monitor
- Fuel level sensor monitor
- Fuel temperature sensor monitor

Sensor (The sensors below are determined to be normal)

- Volume airflow sensor
- Barometric pressure sensor
- Intake air temperature sensor
- Engine coolant temperature sensor

LOGIC FLOW CHARTS (Monitor Sequence)

RATIONALITY - NOISE

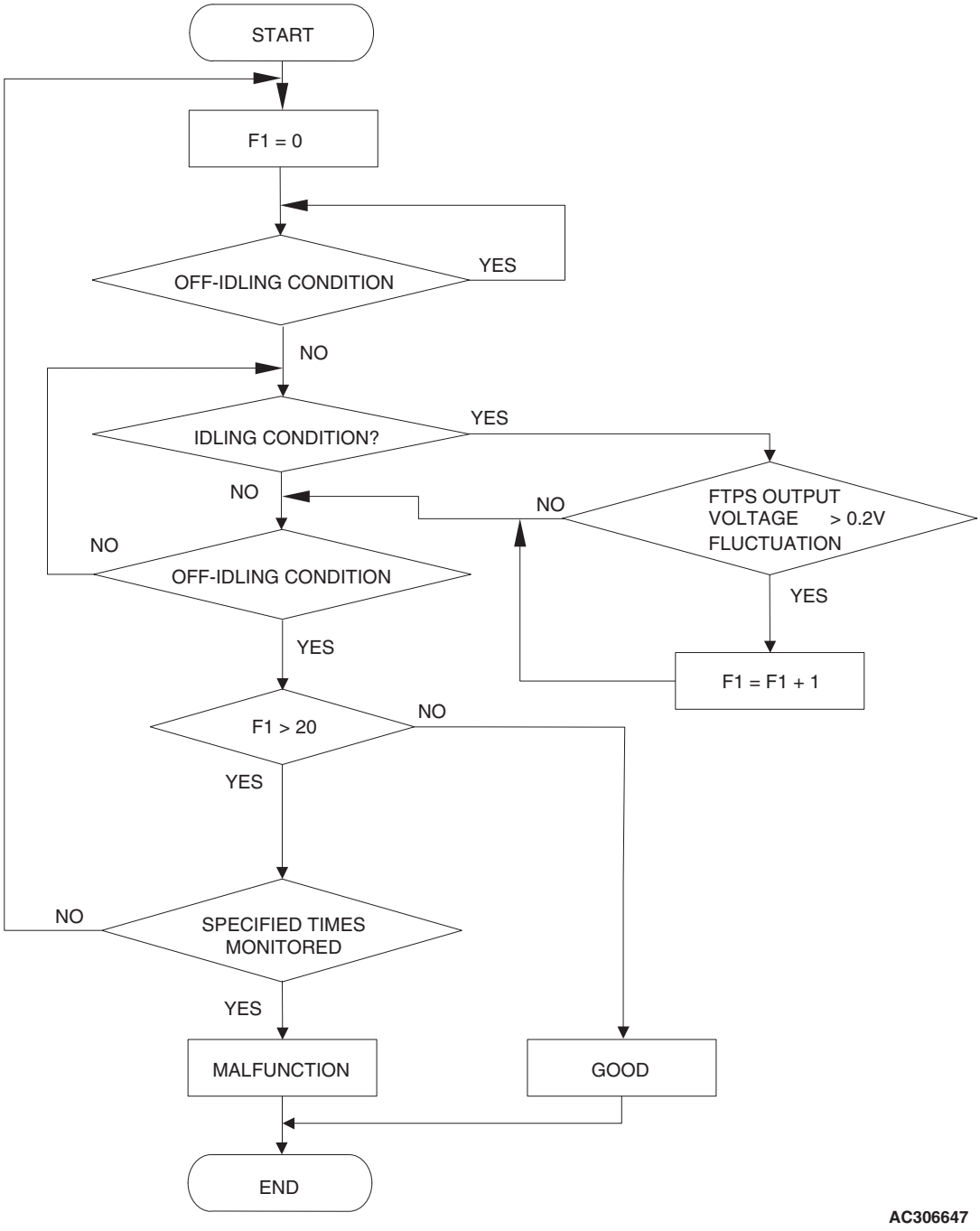

DTC SET CONDITIONS

Check Conditions:

- Throttle valve is closed.
- Vehicle speed is 1.5 km/h (0.93 mph) or less.

Judgement Criteria

- If the voltage signal from the fuel tank differential pressure sensor changes by 0.2 volt or more, DTC P0451 will set. The code may also set if a sudden pressure fluctuation occurs twenty times while the engine is idling, and then eight consecutive times during normal driving.

  NOTE: If the number of sudden pressure fluctuations does not reach twenty during any one period of engine idling, or if the ignition switch is turned OFF, the counter will reset to zero.

  NOTE: The conditions for deviating from idling operation are as follows:

  - *Vehicle speed is 50 km/h (31 mph) or greater.*

OBD-II DRIVE CYCLE PATTERN

Refer to Diagnostic Function –OBD-II Drive Cycle – Pattern 15 P.13A-12.

TROUBLESHOOTING HINTS (THE MOST LIKELY CAUSES FOR THIS CODE TO BE SET ARE:)

- Malfunction of the fuel tank differential pressure sensor.
- A damaged harness in the fuel tank differential pressure sensor circuit.
- Malfunction of the ECM.

OVERVIEW OF TROUBLESHOOTING

- DTC P0451 can be set by a faulty fuel differential pressure sensor or related circuit, or ECM failure.
- To check a system blockage, do a performance test which uses a mechanical vacuum gauge and scan tool MB991958 set on the fuel tank differential pressure sensor (TANK PRS SNSR 73). The mechanical gauge reading is used to verify scan tool MB991958 reading. A comparison of the mechanical gauge to scan tool MB991958 determines the problem in the system.

DIAGNOSIS

Required Special Tools:

- MB991958: Scan Tool (M.U.T.-III Sub Assembly)
  - MB991824: V.C.I.
  - MB991827: USB Cable
  - MB991911: Main Harness B
- MB991658: Test Harness Set

STEP 1. Using scan tool MB991958, check data list item 73: Fuel Tank Differential Pressure Sensor.

⚠ CAUTION

To prevent damage to scan tool MB991958, always turn the ignition switch to the "LOCK" (OFF) position before connecting or disconnecting scan tool MB991958.

(1) Connect scan tool MB991958 to the data link connector.

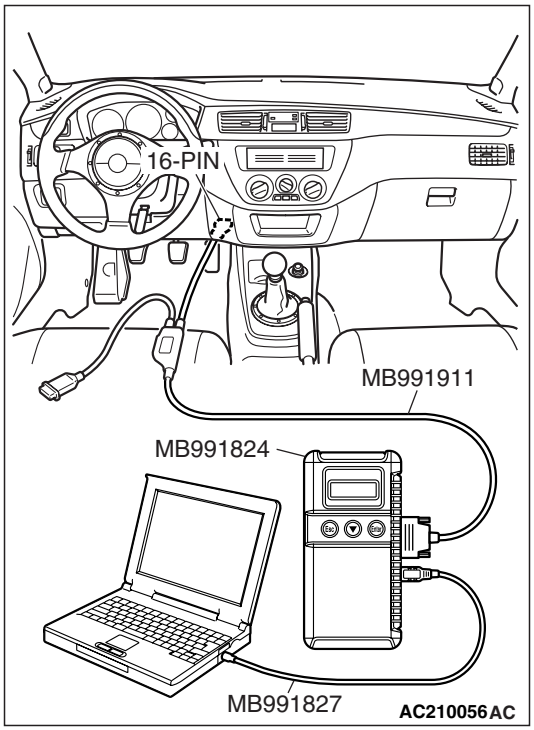

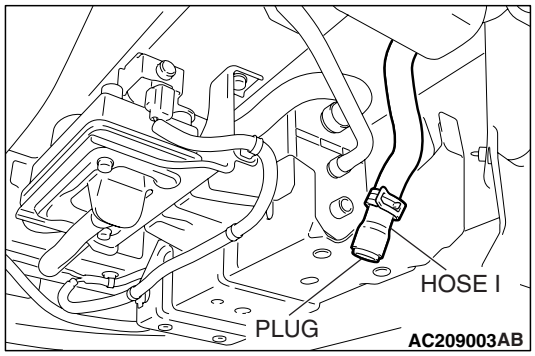

(2) Disconnect hose I from the evaporative emission canister, and plug the hose.
(3) Set scan tool MB991958 to the data reading mode for item 73, Fuel Tank Differential Pressure Sensor.
- The fuel tank pressure reading on the scan tool should be – 1.5 to 1.5 kPa (–0.443 to 0.443 inHg).

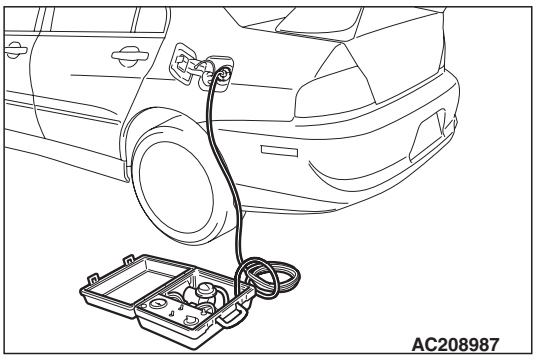

(4) Connect an evaporative emission system pressure pump (Miller number 6872A) to the fuel tank filler tube and pressurize the fuel tank.
- The fuel tank pressure reading should increase.

(5) Turn the ignition switch to the "LOCK" (OFF) position. Then disconnect scan tool MB991958.
(6) Disconnect the evaporative emission system pressure pump, and reinstall the fuel cap.
(7) Connect hose I to the canister.

Q: Is the fuel tank pressure between –1.5 and 1.5 kPa (–0.443 and 0.443 inHg)?

YES : It can be assumed that this malfunction is intermittent. Refer to GROUP 00, How to Use Troubleshooting/Inspection Service Points – Intermittent Malfunction P.00-13. Go to Step 15.

NO : Go to Step 2.

STEP 2. Measure the signal voltage at fuel tank differential pressure sensor connector D-09.

(1) Remove the rear seat assembly (Refer to GROUP 52A, Rear Seat P.52A-22).
(2) Remove the floor pan access panel.

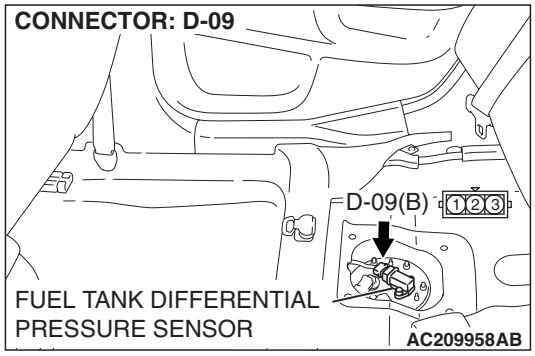

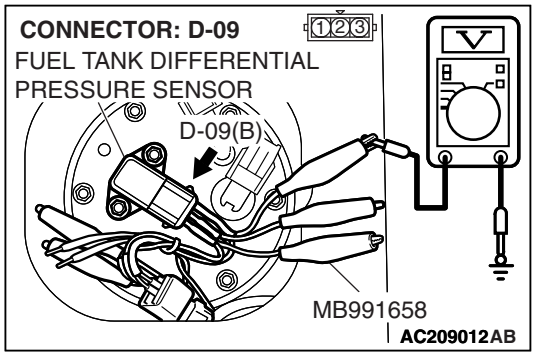

(3) Use special tool Test Harness Set (MB991658) to connect terminals 1,2 and 3 of the fuel tank differential pressure sensor connector D-09.
(4) Turn the ignition switch to the "ON" position.
(5) Remove the fuel cap.
(6) Measure the voltage between connector D-09 terminal 1 and ground.
- The measured voltage should measure between 2.0 to 3.0 volts.

(7) Turn the ignition switch to the "LOCK" (OFF) position.

Q: Is the measured voltage between 2.0 and 3.0 volts?

YES : Go to Step 3.
NO : Go to Step 7.

STEP 3. Measure the signal voltage at ECM connector C-119 by backprobing.

(1) Do not disconnect ECM connector C-119.
(2) Turn the ignition switch to the "ON" position.
(3) Remove the fuel cap.

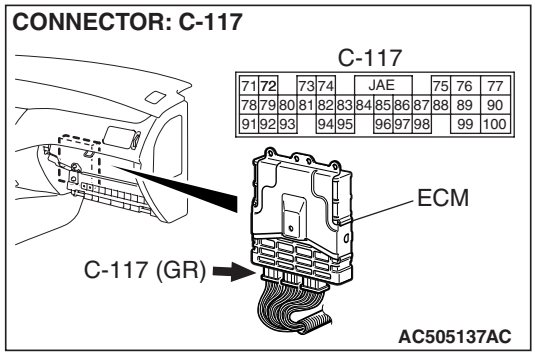

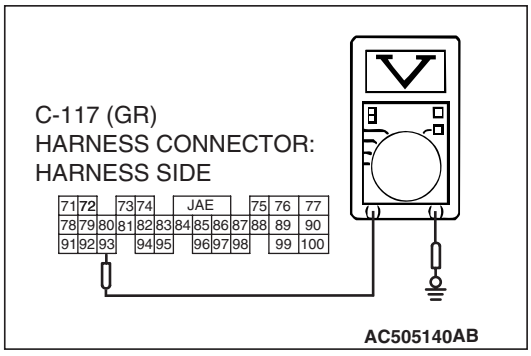

(4) Measure the voltage between connector C-119 terminal 93 and ground by backprobing.
- The measured voltage should measure between 2.0 and 3.0 volts.

(5) Turn the ignition switch to the "LOCK" (OFF) position.

Q: Is the measured voltage between 2.0 and 3.0 volts?

YES : Go to Step 4.
NO : Go to Step 5.

STEP 4. Using scan tool MB991958, check data list item 73: Fuel Tank Differential Pressure Sensor.

⚠ CAUTION

To prevent damage to scan tool MB991958, always turn the ignition switch to the "LOCK" (OFF) position before connecting or disconnecting scan tool MB991958.

(1) Connect scan tool MB991958 to the data link connector.

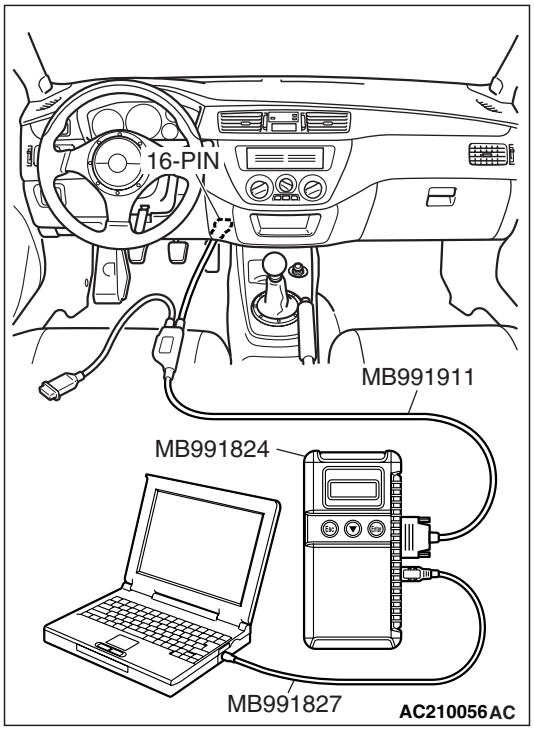

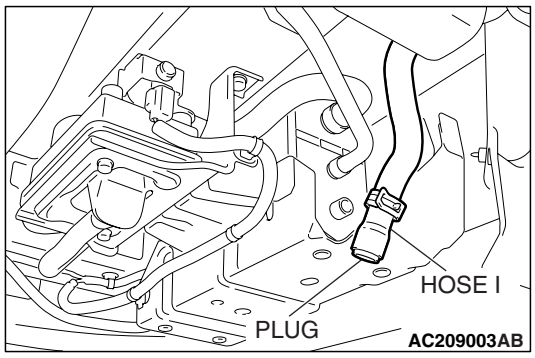

(2) Disconnect hose I from the evaporative emission canister, and plug the hose.
(3) Turn the ignition switch to the "ON" position.
(4) Remove the fuel cap.
(5) Set scan tool MB991958 to the data reading mode for item 73, Fuel Tank Differential Pressure Sensor.
   - The fuel tank pressure reading on the scan tool should be –1.5 to 1.5 kPa (–0.443 to 0.443 inHg).

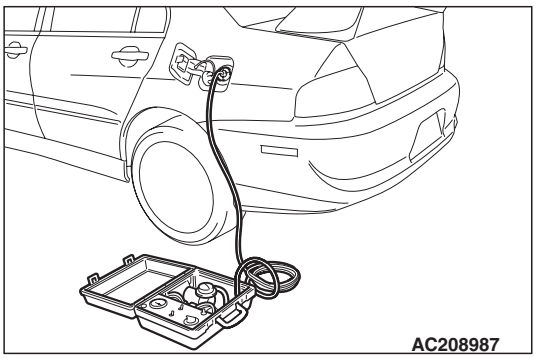

(6) Connect an evaporative emission system pressure pump (Miller number 6872A) to the fuel tank filler tube and pressurize the fuel tank.
   - The fuel tank pressure reading should increase.
(7) Turn the ignition switch to the "LOCK" (OFF) position.
(8) Disconnect the evaporative emission system pressure pump, and reinstall the fuel cap.
(9) Connect hose I to the canister.

Q: Is the fuel tank pressure between –1.5 and 1.5 kPa (–0.443 and 0.443 inHg)?

YES : It can be assumed that this malfunction is intermittent. Refer to GROUP 00, How to Use Troubleshooting/Inspection Service Points – Intermittent Malfunction P.00-13. Go to Step 15.

NO : Replace the ECM. Go to Step 15.

STEP 5. Check intermediate connectors C-113, C-122 and D-35, and ECM connector C-119, and fuel tank differential pressure sensor connector D-09 for loose, corroded or damaged terminals, or terminals pushed back in the connector.

CONNECTOR: C-113

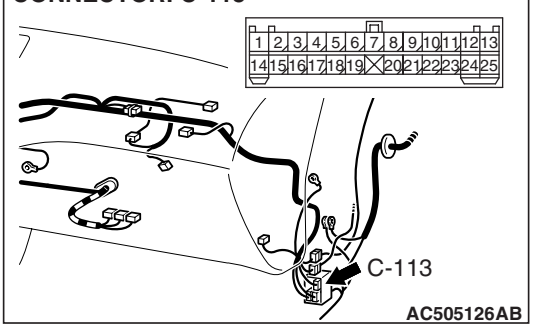

CONNECTOR: C-117

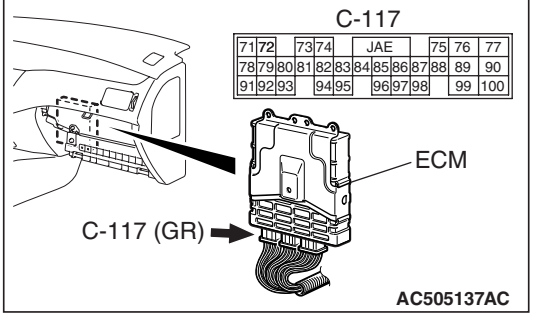

CONNECTOR: C-122

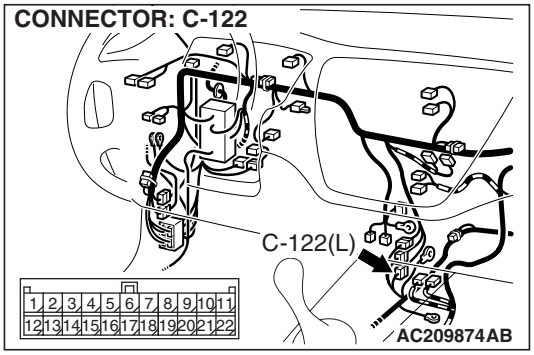

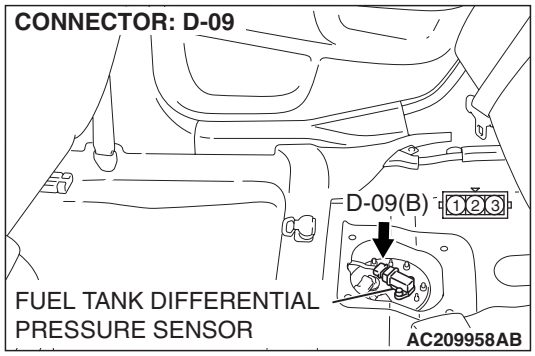

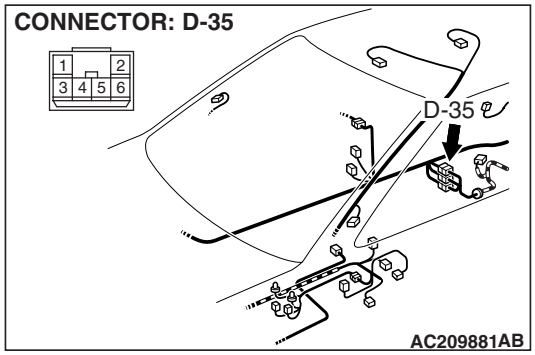

Q: Are the connectors in good condition?

YES : Go to Step 6.

NO : Repair or replace the faulty components. Refer to GROUP 00E, Harness Connector Inspection P.00E-2. Go to Step 15.

STEP 6. Check the harness wire between ECM connector C-119 terminal 93 and intermediate connector D-09 terminal 1 for damage.

Q: Is the harness wire in good condition?

YES : This malfunction is intermittent. Refer to GROUP 00, How to Use Troubleshooting/Inspection Service Points - How to Cope with Intermittent Malfunction P.00-13. Go to Step 15.

NO : Repair the damaged harness wire. Go to Step 15.

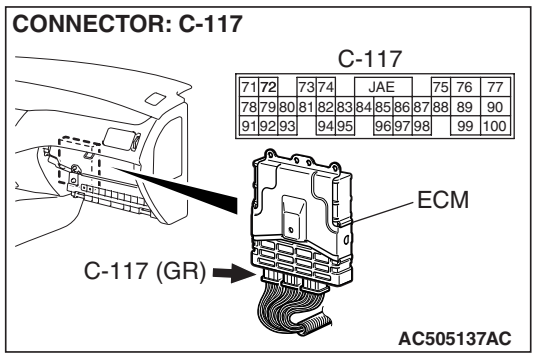

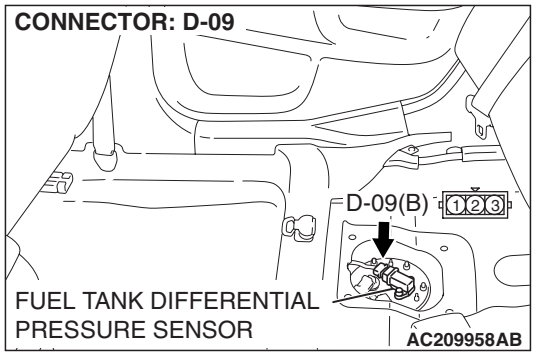

STEP 7. Measure the 5-volt reference signal at fuel tank differential pressure sensor connector D-09.

(1) Disconnect fuel tank differential pressure sensor connector D-09.

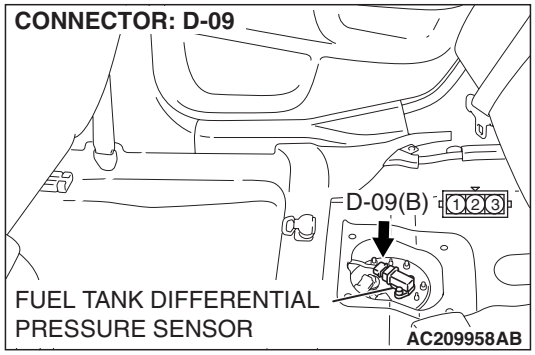

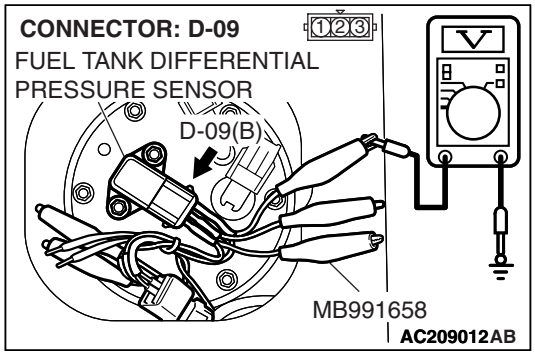

(2) Use special tool MB991658 to connect terminals 1, 2 and 3 of connector D-09.
(3) Turn the ignition switch to the "ON" position.
(4) Measure the voltage between terminal 3 and ground.
- The voltage should measure between 4.9 and 5.1 volts.

(5) Turn the ignition switch to the "LOCK" (OFF) position.

Q: Is the measured voltage between 4.9 and 5.1 volts?

YES : Go to Step 8.
NO : Go to Step 11.

STEP 8. Measure the return circuit voltage at fuel tank differential pressure sensor connector D-09.

(1) Disconnect fuel tank differential pressure sensor connector D-09.

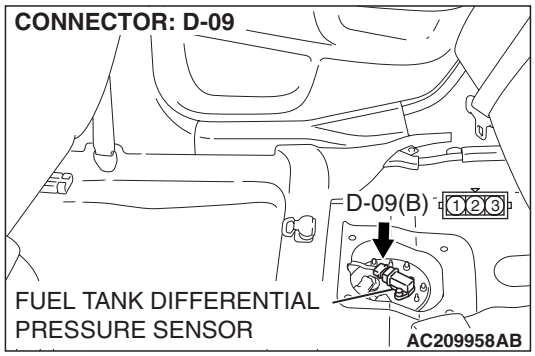

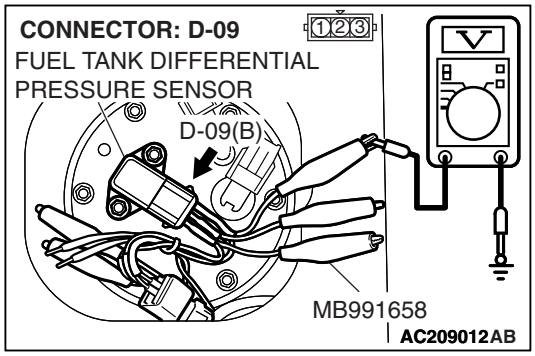

(2) Use special tool MB991658 to connect terminal 3 of connector D-09.
(3) Turn the ignition switch to the "ON" position.
(4) Measure the voltage between terminal 2 and ground.
- The voltage should measure 0.5 volt or less.

(5) Turn the ignition switch to the "LOCK" (OFF) position.

Q: Is the measure voltage 0.5 volt or less?

YES : Go to Step 9.
NO : Replace the fuel tank differential pressure sensor. Go to Step 15.

STEP 9. Check intermediate connectors C-113, C-122 and D-35, and ECM connector C-117,C-119 and fuel tank differential pressure sensor connector for D-09 loose, corroded or damaged terminals, or terminals pushed back in the connector.

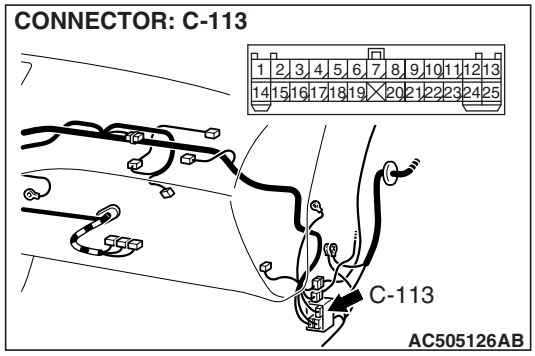

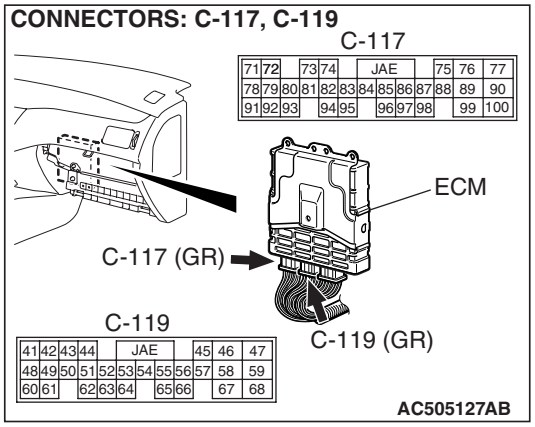

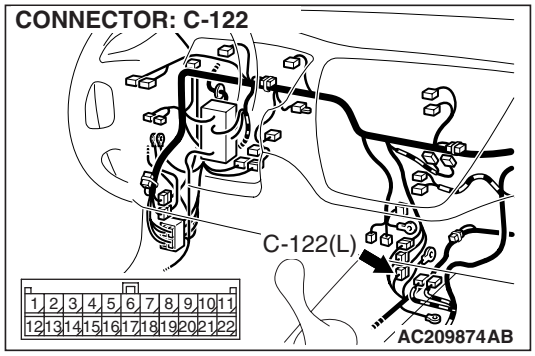

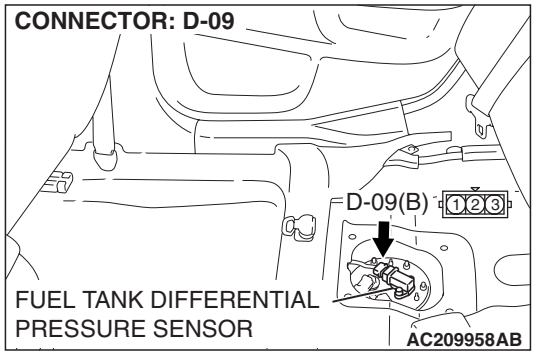

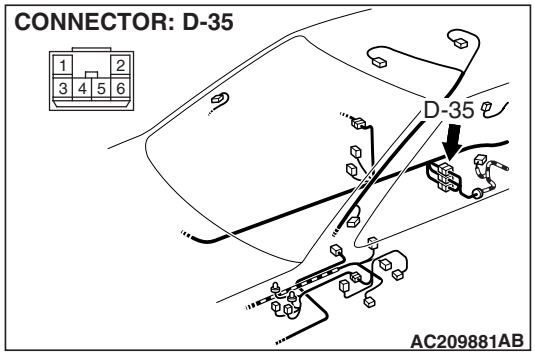

Q: Are the connectors and terminals in good condition?

YES : Go to Step 10.

NO : Repair or replace the damage components. Refer to GROUP 00E, Harness Connector Inspection P.00E-2. Go to Step 15.

STEP 10. Check the harness wire between ECM connector C-117 terminal 49 and fuel tank differential pressure sensor connector D-09 terminal 2 for damage.

Q: Is the harness wire in good condition?

YES : Replace the fuel tank differential pressure sensor. Go to Step 15.

NO : Repair or replace the harness wire. Go to Step 15.

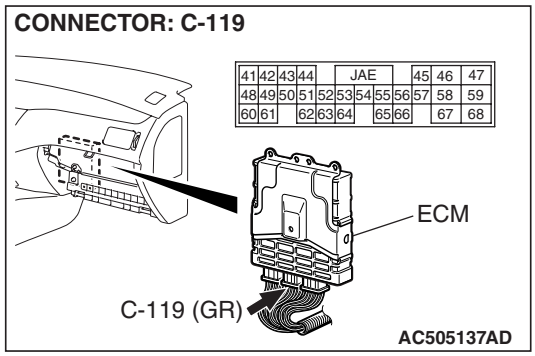

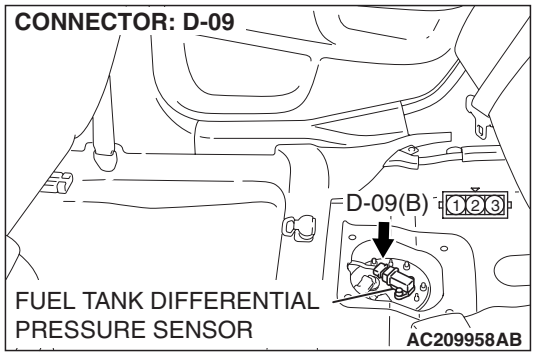

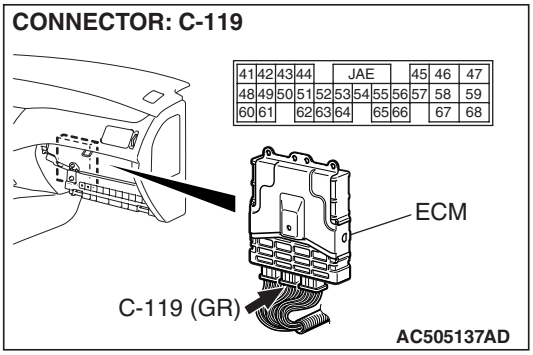

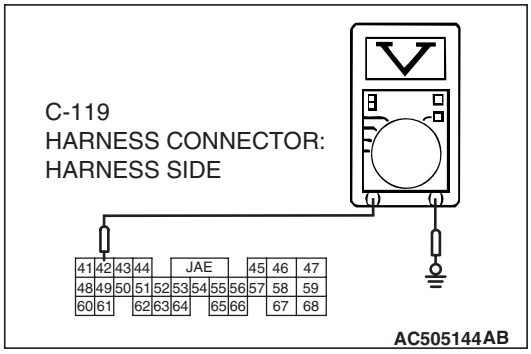

STEP 11. Measure the 5-volts reference signal at ECM connector C-117 by backprobing.

(1) Turn the ignition switch to the "ON" position.

(2) Measure the voltage between connector C-117 terminal 42 and ground by backprobing.

- The measured voltage should measure between 4.9 and 5.1 volts.

(3) Turn the ignition switch to the "LOCK" (OFF) position.

Q: Is the measured voltage between 4.9 and 5.1 volts?

YES : Go to Step 12.

NO : Go to Step 14.

STEP 12. Check intermediate connectors C-113, C-122 and D-35, and ECM connector C-117 and fuel tank differential pressure sensor connector for D-09 loose, corroded or damaged terminals, or terminals pushed back in the connector.

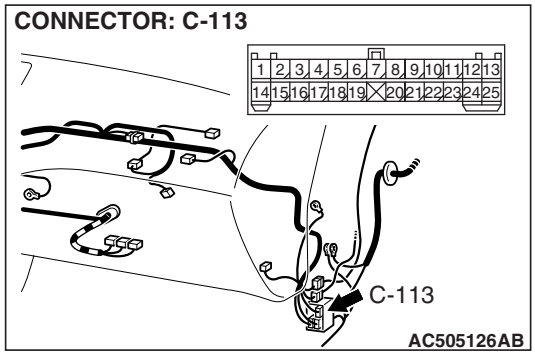

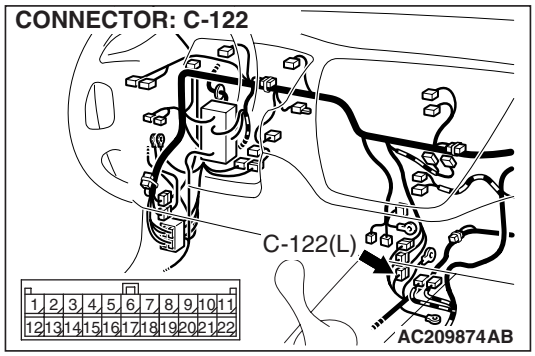

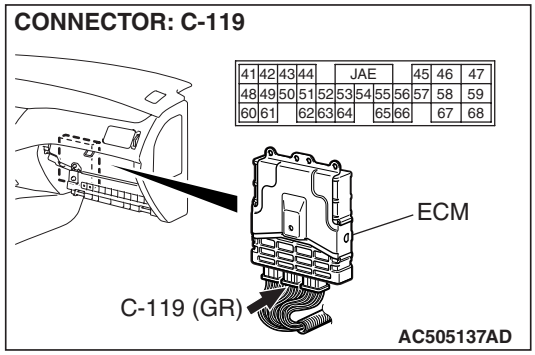

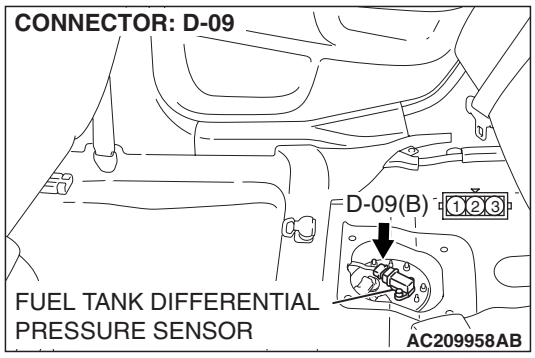

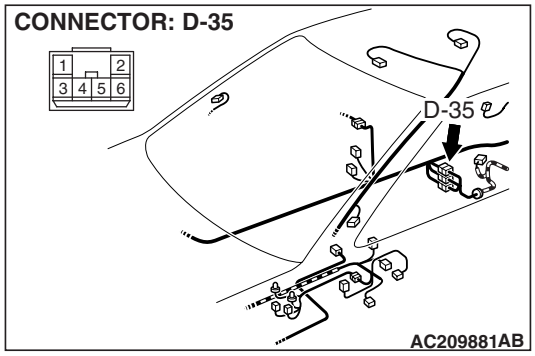

Q: Are the connectors and terminals in good condition?

YES : Go to Step 13.

NO : Repair or replace the faulty component. Go to Step 15.

STEP 13. Check the harness wire between ECM connector C-117 terminal 42 and fuel tank differential pressure sensor connector D-09 terminal 3 for damage.

Q: Is the harness wire in good condition?

YES : It can be assumed that this malfunction is intermittent. Refer to GROUP 00, How to Use Troubleshooting/Inspection Service Points - How to Cope with intermittent Malfunction P.00-13. Go to Step 15.

NO : Repair or replace the harness wire. Go to Step 15.

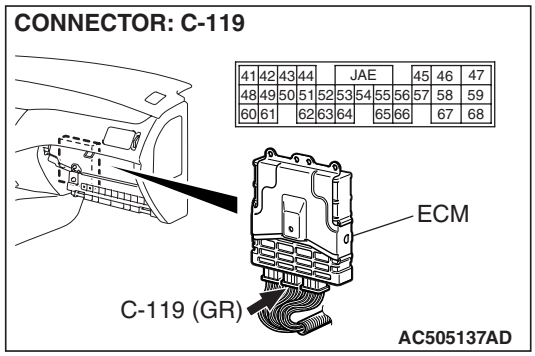

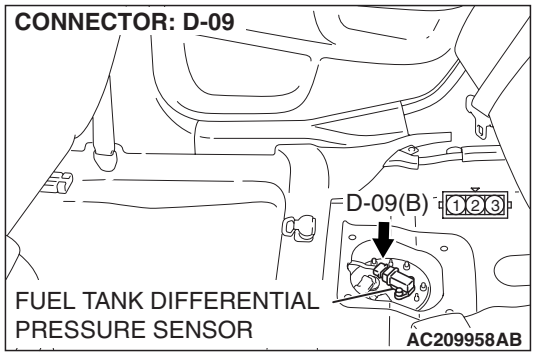

STEP 14. Check ECM connector C-117 for loose, corroded or damaged terminals, or terminals pushed back in the connector.

Q: Are the connector and terminals in good condition?

YES : Replace the ECM. Go to Step 15.

NO : Repair or replace the damaged components. Refer to GROUP 00E, Harness Connector Inspection P.00E-2. Go to Step 15.

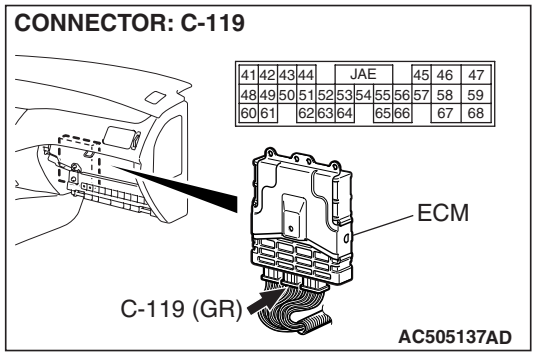

STEP 15. Perform the OBD-II drive cycle.

(1) Carry out a test drive with the drive cycle pattern. Refer to Diagnostic Function –OBD-II Drive Cycle –Pattern 15 P.13A-12.

(2) Read the diagnostic trouble code (DTC).

Q: Is DTC P0451 set?

YES : Go to Step 2.

NO : The procedure is complete.

DTC P0452: Evaporative Emission System Pressure Sensor Low Input

SYSTEM DIAGRAM

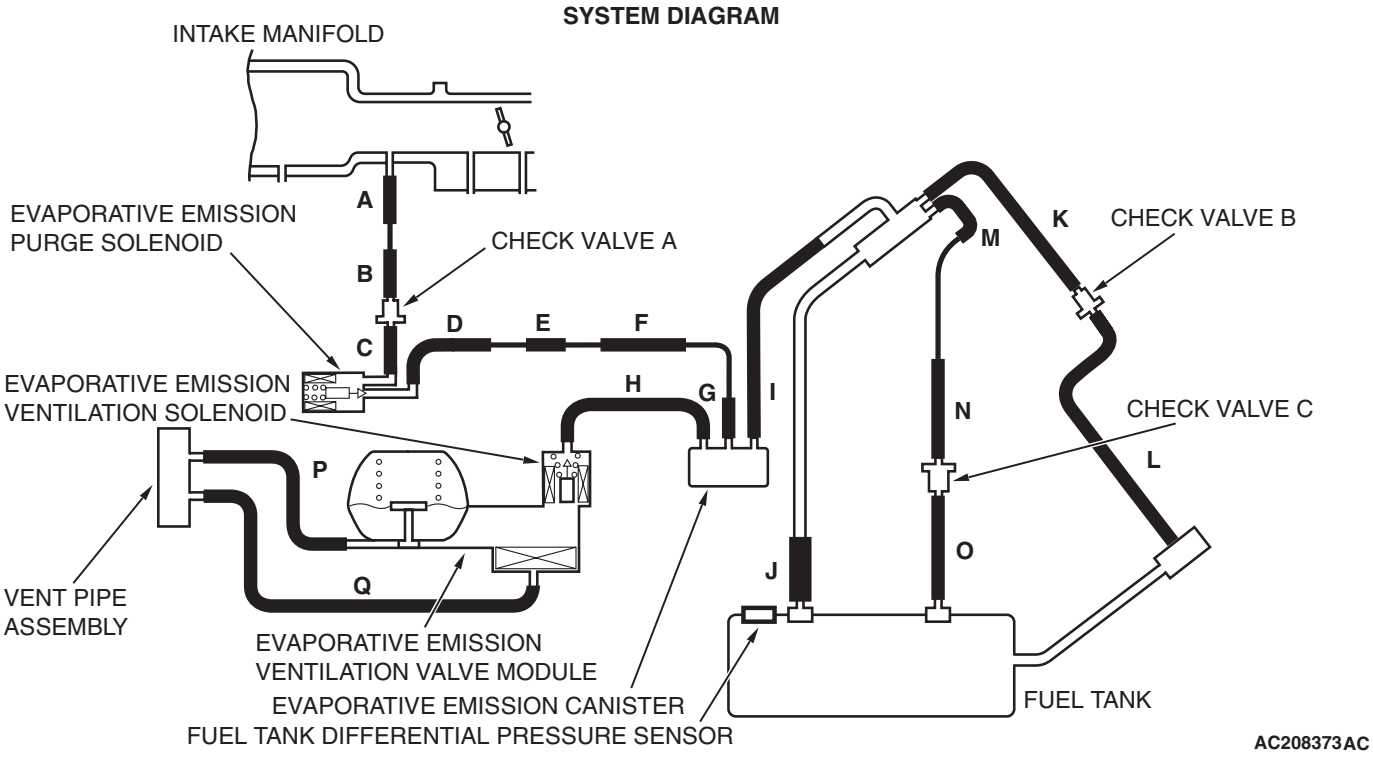

Fuel Tank Differential Pressure Sensor Circuit

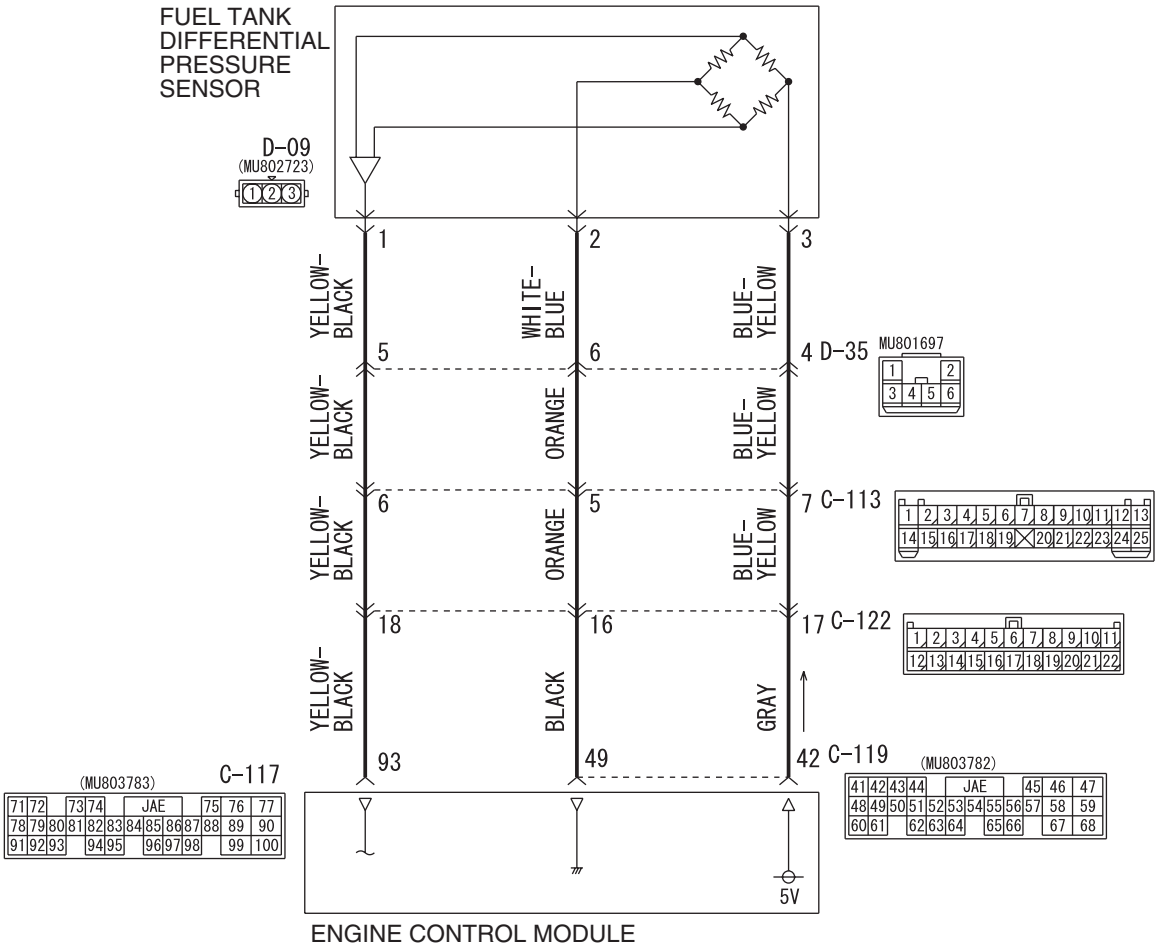

AC505150
W6J12M000A

CONNECTOR: C-113

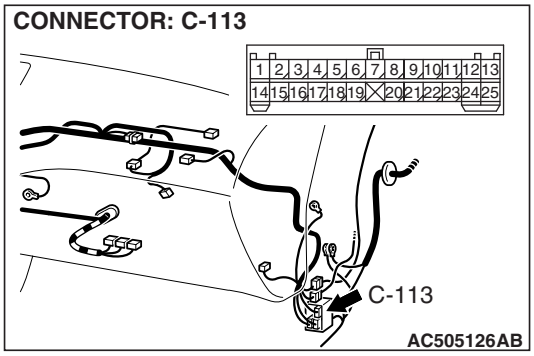

CONNECTORS: C-117, C-119

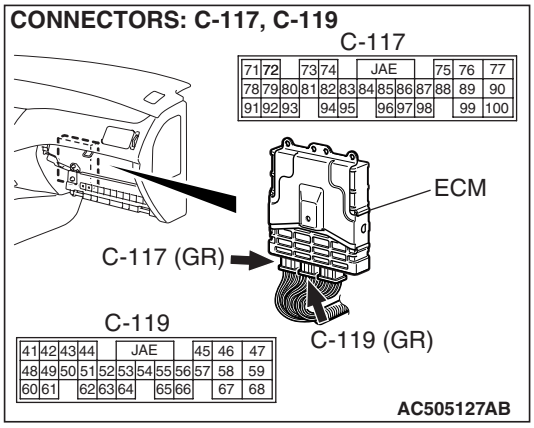

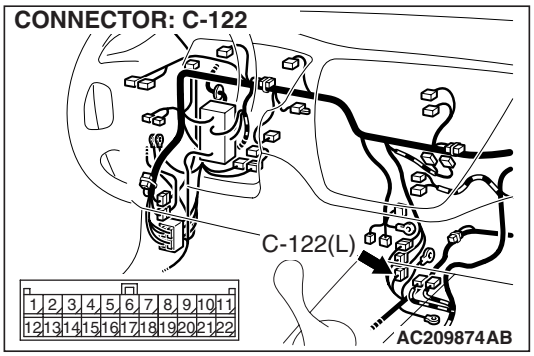

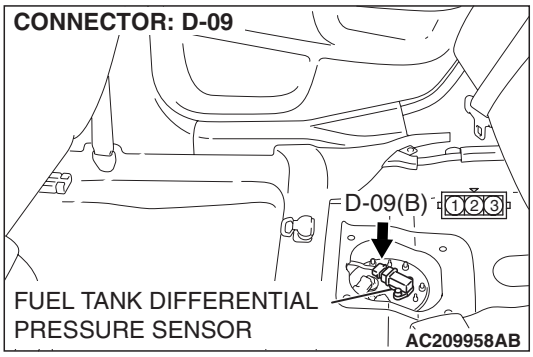

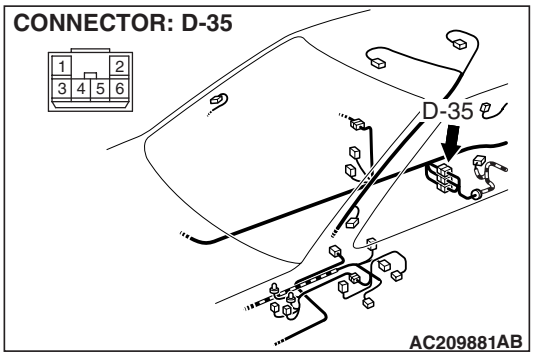

CIRCUIT OPERATION

- The ECM (terminal 42) supplies a 5-volts reference signal to the fuel tank differential pressure sensor (terminal 3). The fuel tank differential pressure sensor (terminal 2) is grounded through the ECM (terminal 49).
- The fuel tank differential pressure sensor (terminal 1) returns a voltage signal to the ECM (terminal 93) that is proportional to the pressure in the fuel tank.

TECHNICAL DESCRIPTION

- The ECM monitors the fuel tank differential pressure sensor output voltage.
- The ECM determines whether the fuel tank differential pressure sensor signal voltage is within normal operating parameters.

DESCRIPTIONS OF MONITOR METHODS

Compare purge solenoid status with fuel tank differential pressure sensor output voltage.

MONITOR EXECUTION

Continuous.

MONITOR EXECUTION CONDITIONS (OTHER MONITOR AND SENSOR)

Other Monitor (There is no temporary DTC stored in memory for the item monitored below)

- Evaporative emission purge solenoid monitor
- Evaporative emission ventilation solenoid monitor
- Fuel level sensor monitor
- Fuel temperature sensor monitor

Sensor (The sensors below are determined to be normal)

- Volume airflow sensor
- Barometric pressure sensor
- Intake air temperature sensor
- Engine coolant temperature sensor

LOGIC FLOW CHARTS (Monitor Sequence)

RANGE CHECK - MIN. / MAX.

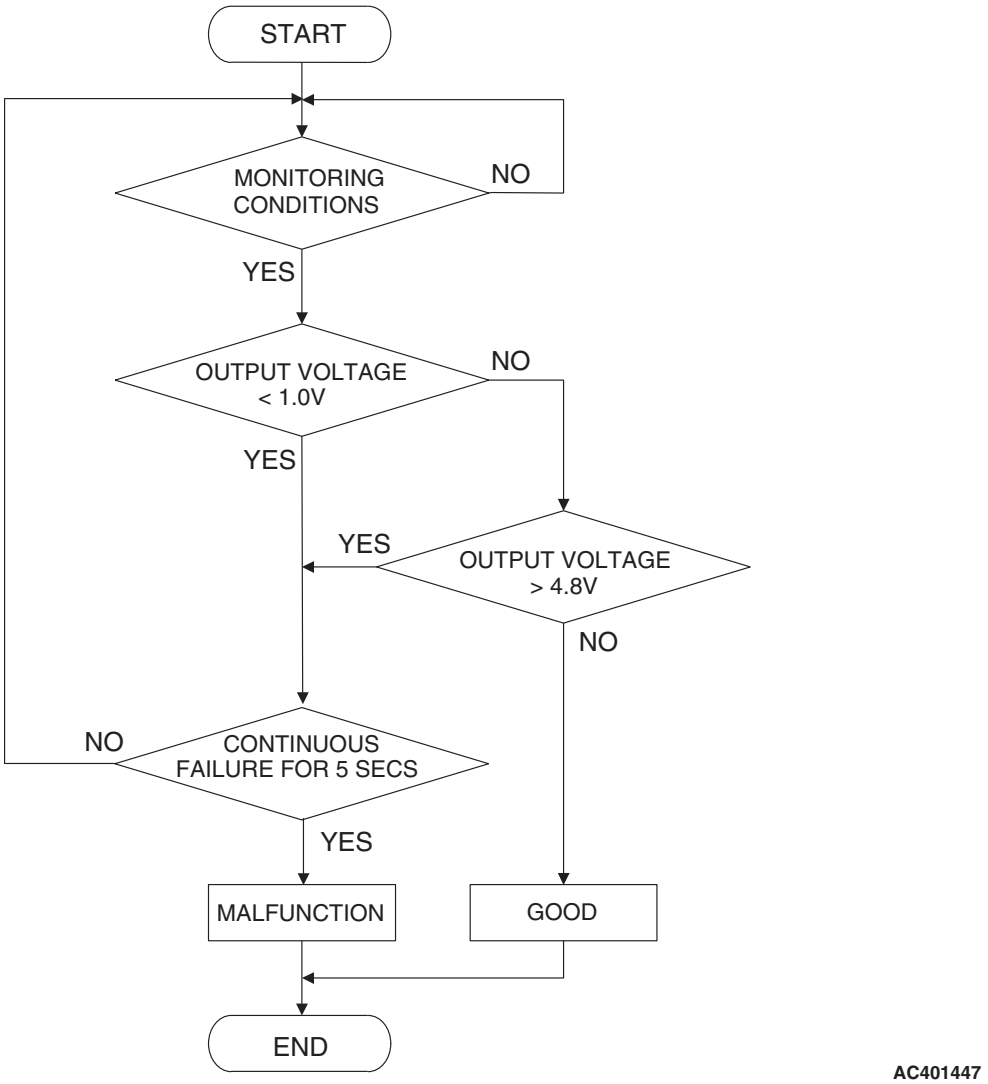

DTC SET CONDITIONS

Check Conditions:

- 2 seconds or more have passed since the starting sequence was completed.

Judgement Criterion

- The fuel tank differential pressure sensor output voltage remains 0.2 volt or less for 5 seconds.

OBD-II DRIVE CYCLE PATTERN

Refer to Diagnostic Function –OBD-II Drive Cycle – Pattern 20 P.13A-12.

TROUBLESHOOTING HINTS (THE MOST LIKELY CAUSES FOR THIS CODE TO BE SET ARE:)

- Malfunction of the fuel tank differential pressure sensor.
- A damaged harness in the fuel tank differential pressure sensor circuit.
- Malfunction of the ECM.

OVERVIEW OF TROUBLESHOOTING

- DTC P0452 can be set by a faulty fuel differential pressure sensor or related circuit, or ECM failure.
- To check a system blockage, do a performance test which uses a mechanical vacuum gauge and scan tool MB991958 set on the fuel tank differential pressure sensor (TANK PRS SNSR 73). The mechanical gauge reading is used to verify scan tool MB991958 reading. A comparison of the mechanical gauge to scan tool MB991958 determines the problem in the system.

DIAGNOSIS

Required Special Tools:

- MB991958: Scan Tool (M.U.T.-III Sub Assembly)
  - MB991824: V.C.I.
  - MB991827: USB Cable
  - MB991911: Main Harness B
- MB991658: Test Harness Set

STEP 1. Using scan tool MB991958, check data list item 73: Fuel Tank Differential Pressure Sensor.

⚠ CAUTION

To prevent damage to scan tool MB991958, always turn the ignition switch to the "LOCK" (OFF) position before connecting or disconnecting scan tool MB991958.

(1) Connect scan tool MB991958 to the data link connector.

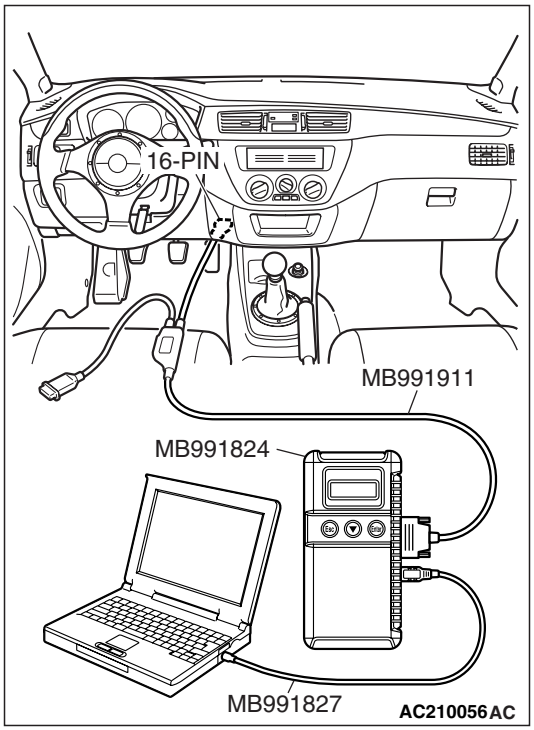

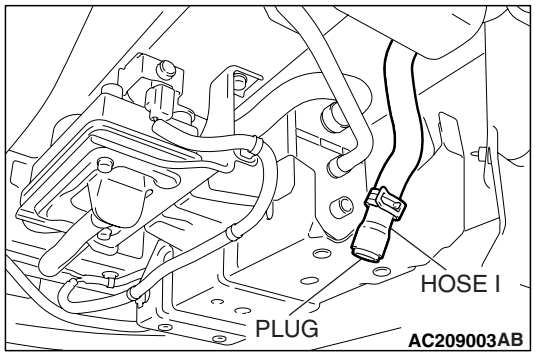

(2) Disconnect hose I from the evaporative emission canister, and plug the hose.
(3) Set scan tool MB991958 to the data reading mode for item 73, Fuel Tank Differential Pressure Sensor.
- The fuel tank pressure reading on the scan tool should be –1.5 to 1.5 kPa (–0.443 to 0.443 inHg).

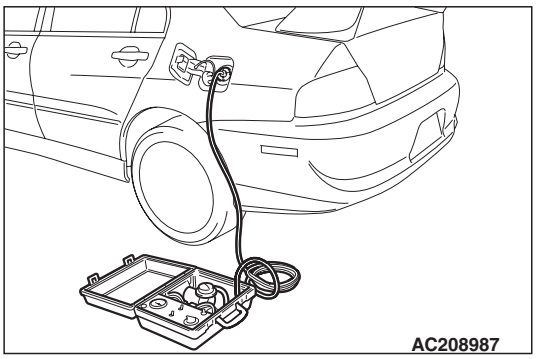

(4) Connect an evaporative emission system pressure pump (Miller number 6872A) to the fuel tank filler tube and pressurize the fuel tank.
- The fuel tank pressure reading should increase.

(5) Turn the ignition switch to the "LOCK" (OFF) position. Then disconnect scan tool MB991958.
(6) Disconnect the evaporative emission system pressure pump, and reinstall the fuel cap.
(7) Connect hose I to the canister.

Q: Is the fuel tank pressure between –1.5 and 1.5 kPa (–0.443 and 0.443 inHg)?

YES : It can be assumed that this malfunction is intermittent. Refer to GROUP 00, How to Use Troubleshooting/Inspection Service Points – Intermittent Malfunction P.00-13. Go to Step 15.

NO : Go to Step 2.

STEP 2. Measure the signal voltage at fuel tank differential pressure sensor connector D-09.

(1) Remove the rear seat assembly (Refer to GROUP 52A, Rear Seat P.52A-22).
(2) Remove the floor pan access panel.

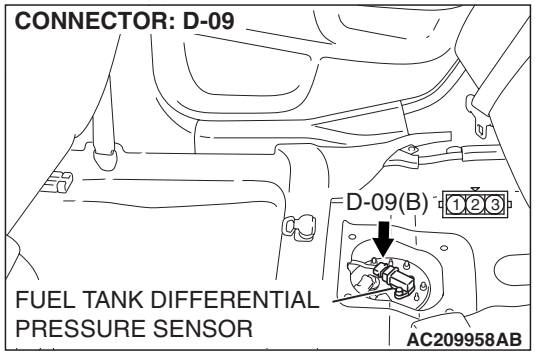

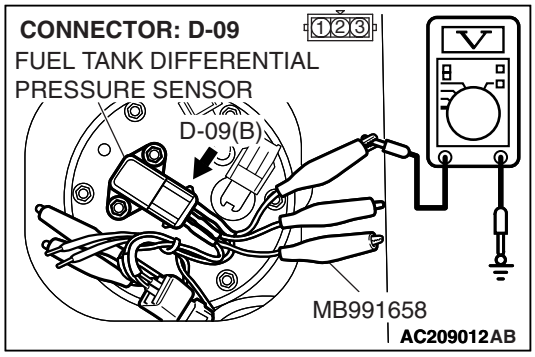

(3) Use special tool MB991658 to connect terminals 1,2 and 3 of the fuel tank differential pressure sensor connector D-09.
(4) Turn the ignition switch to the "ON" position.
(5) Remove the fuel cap.
(6) Measure the voltage between connector D-09 terminal 1 and ground.
- The measured voltage should measure between 2.0 and 3.0 volts.

(7) Turn the ignition switch to the "LOCK" (OFF) position.

Q: Is the measured voltage between 2.0 and 3.0 volts?

YES : Go to Step 3.
NO : Go to Step 7.

STEP 3. Measure the signal voltage at ECM connector C-119 by backprobing.

(1) Do not disconnect ECM connector C-119.
(2) Turn the ignition switch to the "ON" position.
(3) Remove the fuel cap.

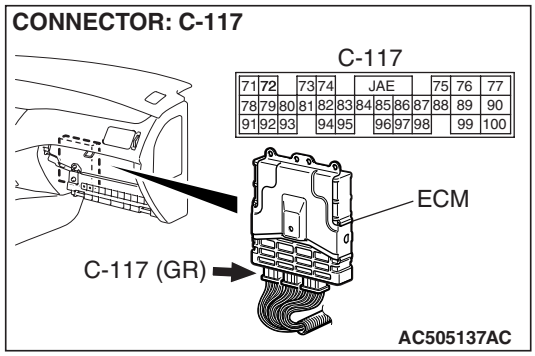

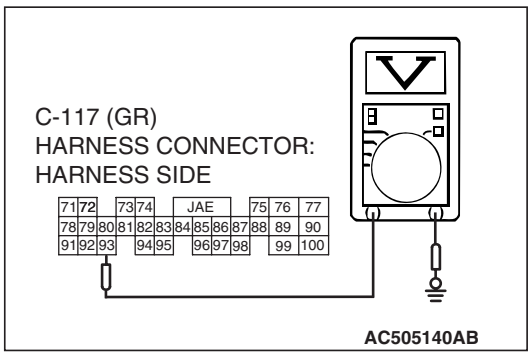

(4) Measure the voltage between connector C-119 terminal 93 and ground by backprobing.
- The measured voltage should measure between 2.0 to 3.0 volts.

(5) Turn the ignition switch to the "LOCK" (OFF) position.

Q: Is the measured voltage between 2.0 and 3.0 volts?

YES : Go to Step 4.
NO : Go to Step 5.

STEP 4. Using scan tool MB991958, check data list item 73: Fuel Tank Differential Pressure Sensor.

⚠ CAUTION

To prevent damage to scan tool MB991958, always turn the ignition switch to the "LOCK" (OFF) position before connecting or disconnecting scan tool MB991958.

(1) Connect scan tool MB991958 to the data link connector.

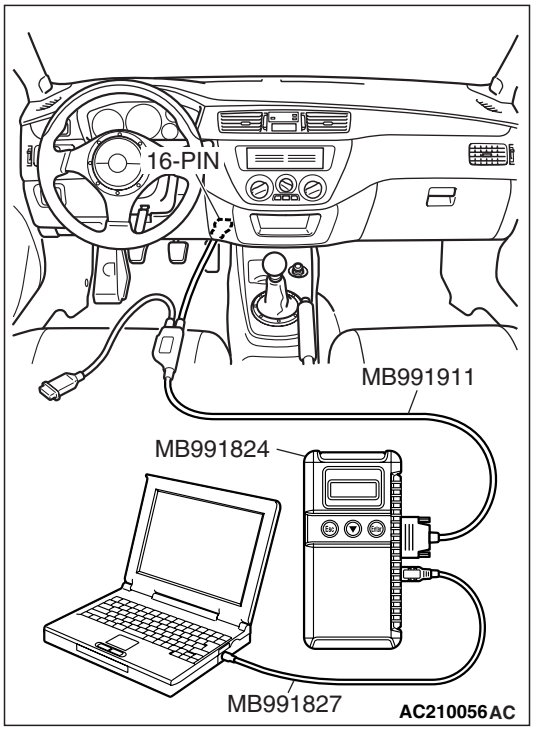

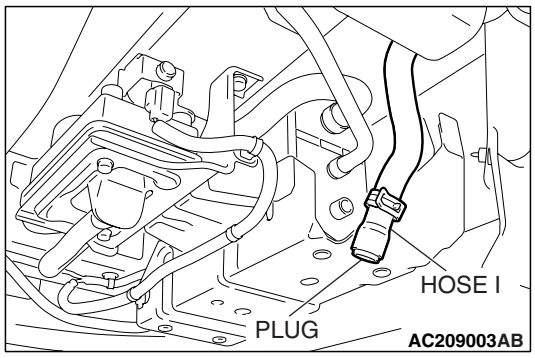

(2) Disconnect hose I from the evaporative emission canister, and plug the hose.
(3) Turn the ignition switch to the "ON" position.
(4) Remove the fuel cap.
(5) Set scan tool MB991958 to the data reading mode for item 73, Fuel Tank Differential Pressure Sensor.
   - The fuel tank pressure reading on the scan tool should be –1.5 to 1.5 kPa (–0.443 to 0.443 inHg).

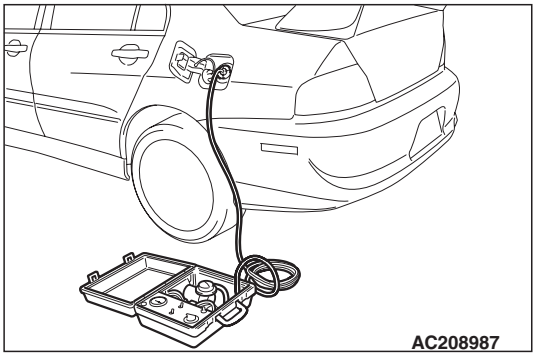

(6) Connect an evaporative emission system pressure pump (Miller number 6872A) to the fuel tank filler tube and pressurize the fuel tank.
   - The fuel tank pressure reading should increase.
(7) Turn the ignition switch to the "LOCK" (OFF) position.
(8) Disconnect the evaporative emission system pressure pump, and reinstall the fuel cap.
(9) Connect hose I to the canister.

Q: Is the fuel tank pressure between –1.5 and 1.5 kPa (–0.443 and 0.443 inHg)?

YES : It can be assumed that this malfunction is intermittent. Refer to GROUP 00, How to Use Troubleshooting/Inspection Service Points – Intermittent Malfunction P.00-13. Go to Step 15.

NO : Replace the ECM. Go to Step 15.

STEP 5. Check intermediate connectors C-113, C-122 and D-35, and ECM connector C-119, and fuel tank differential pressure sensor connector D-09 for loose, corroded or damaged terminals, or terminals pushed back in the connector.

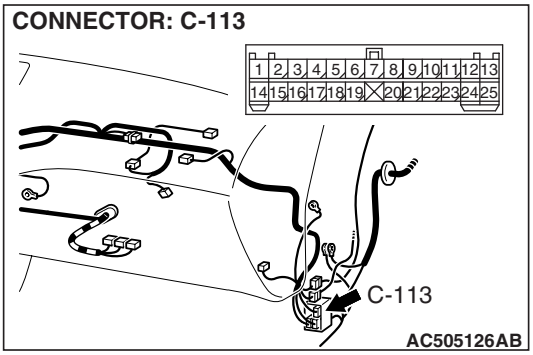

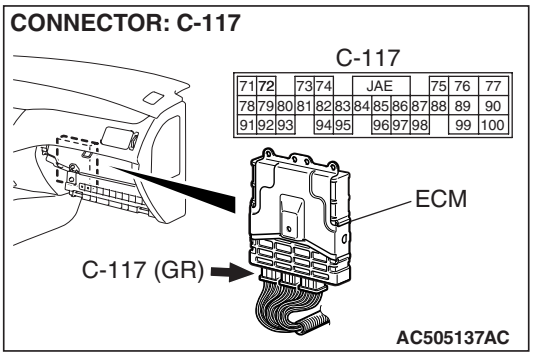

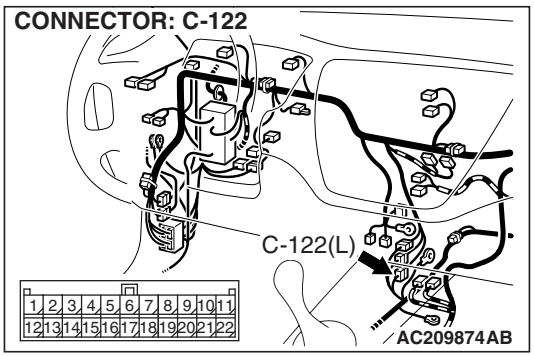

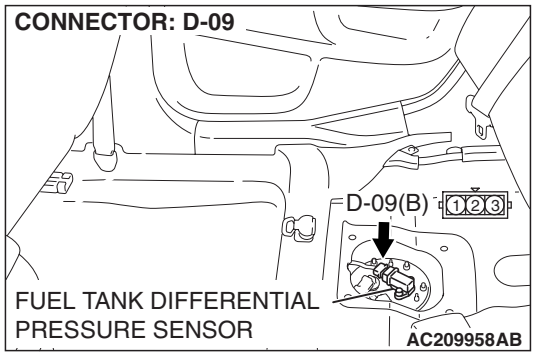

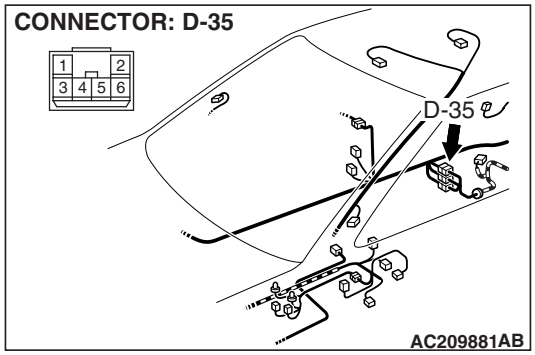

Q: Are the connectors in good condition?

YES : Go to Step 6.

NO : Repair or replace the faulty components. Refer to GROUP 00E, Harness Connector Inspection P.00E-2. Go to Step 15.

STEP 6. Check the harness wire between ECM connector C-119 terminal 93 and intermediate connector D-09 terminal 1 for damage.

Q: Is the harness wire in good condition?

YES : This malfunction is intermittent. Refer to GROUP 00, How to Use Troubleshooting/Inspection Service Points - How to Cope with Intermittent Malfunction P.00-13. Go to Step 15.

NO : Repair the damaged harness wire. Go to Step 15.

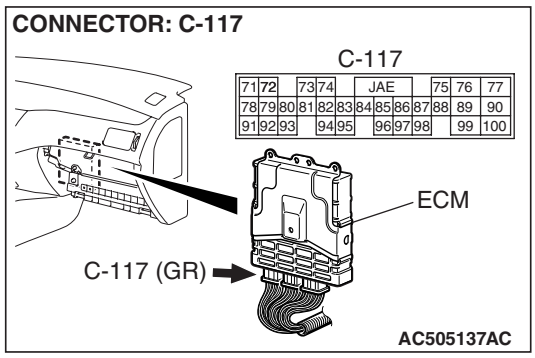

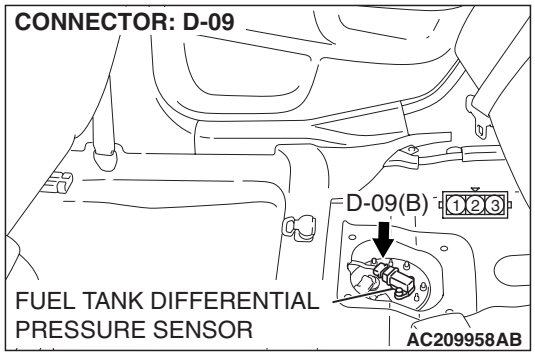

STEP 7. Measure the 5-volts reference signal at fuel tank differential pressure sensor connector D-09.

(1) Disconnect fuel tank differential pressure sensor connector D-09.

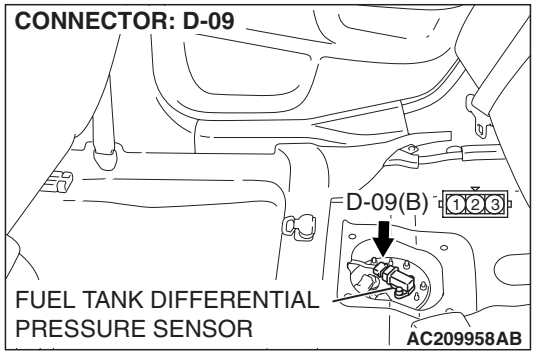

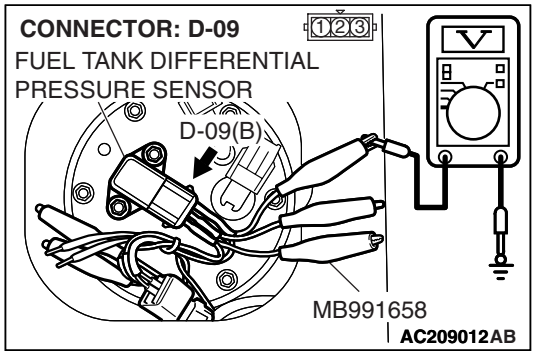

(2) Use special tool MB991658 to connect terminals 1, 2 and 3 of connector D-09.
(3) Turn the ignition switch to the "ON" position.
(4) Measure the voltage between terminal 3 and ground.
- The voltage should measure between 4.9 and 5.1 volts.

(5) Turn the ignition switch to the "LOCK" (OFF) position.

Q: Is the measured voltage between 4.9 and 5.1 volts?

YES : Go to Step 8.
NO : Go to Step 11.

STEP 8. Measure the return circuit voltage at fuel tank differential pressure sensor connector D-09.

(1) Disconnect fuel tank differential pressure sensor connector D-09.

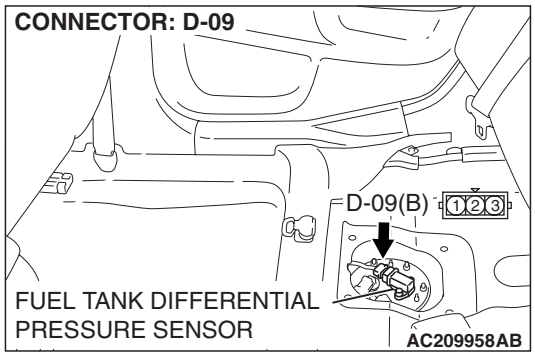

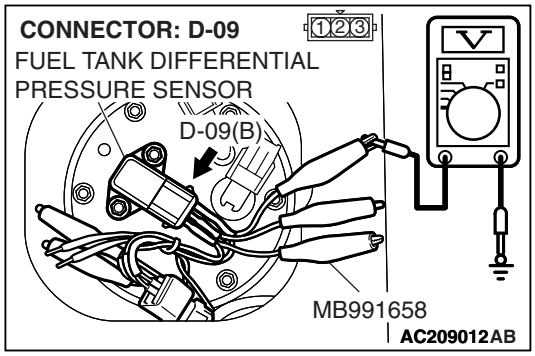

(2) Use special tool MB991658 to connect terminal 3 of connector D-09.
(3) Turn the ignition switch to the "ON" position.
(4) Measure the voltage between terminal 2 and ground.
- The voltage should measure 0.5 volt or less.

(5) Turn the ignition switch to the "LOCK" (OFF) position.

Q: Is the measure voltage 0.5 volt or less?

YES : Go to Step 9.
NO : Replace the fuel tank differential pressure sensor. Go to Step 15.

STEP 9. Check intermediate connectors C-113, C-122 and D-35, and ECM connector C-117,C-119 and fuel tank differential pressure sensor connector for D-09 loose, corroded or damaged terminals, or terminals pushed back in the connector.

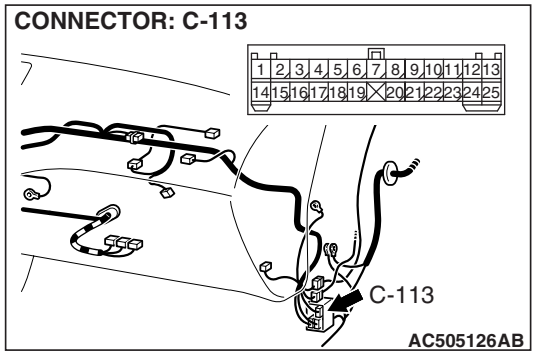

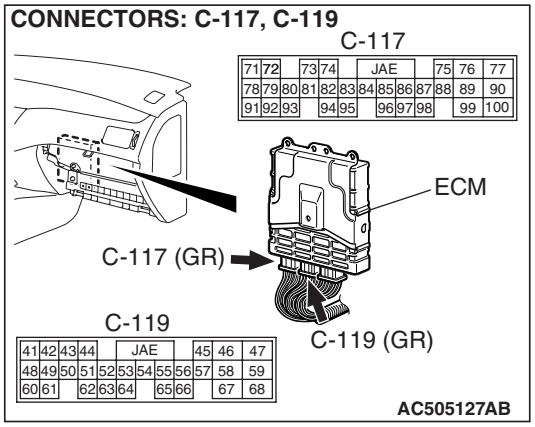

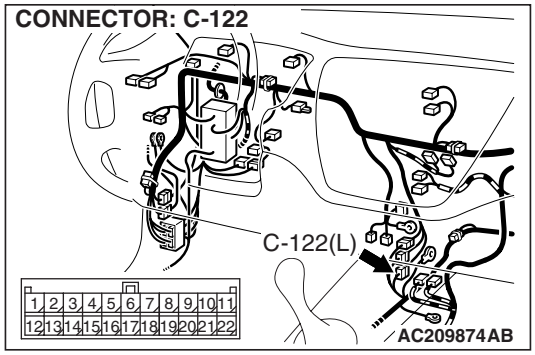

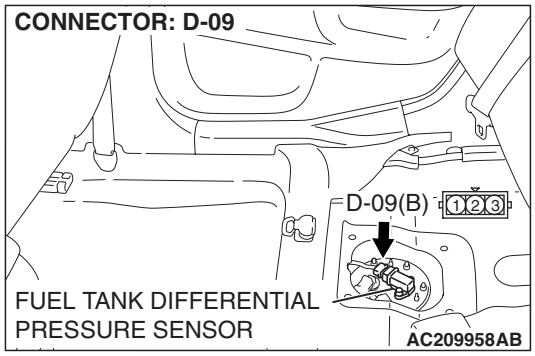

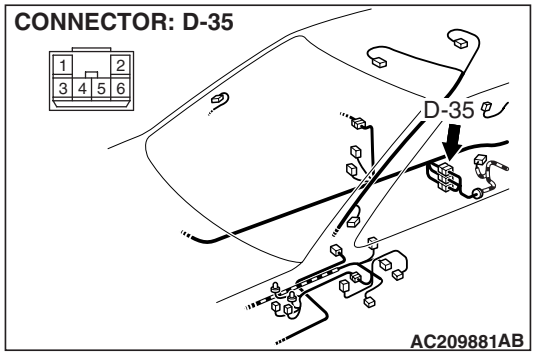

Q: Are the connectors and terminals in good condition?

YES : Go to Step 10.

NO : Repair or replace the damage components. Refer to GROUP 00E, Harness Connector Inspection P.00E-2. Go to Step 15.

STEP 10. Check the harness wire between ECM connector C-117 terminal 49 and fuel tank differential pressure sensor connector D-09 terminal 2 for damage.

Q: Is the harness wire in good condition?

YES : Replace the fuel tank differential pressure sensor. Go to Step 15.

NO : Repair or replace the harness wire. Go to Step 15.

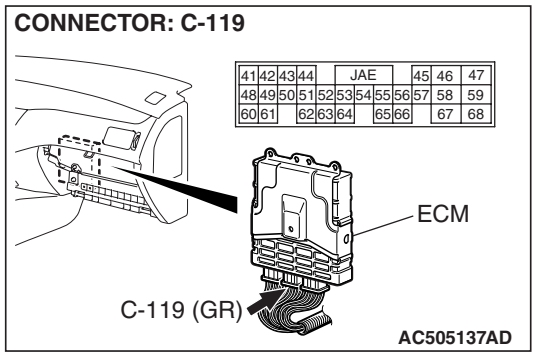

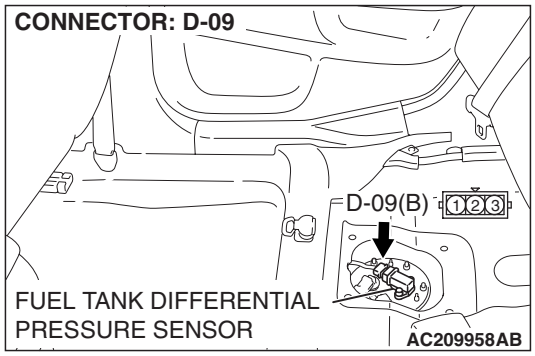

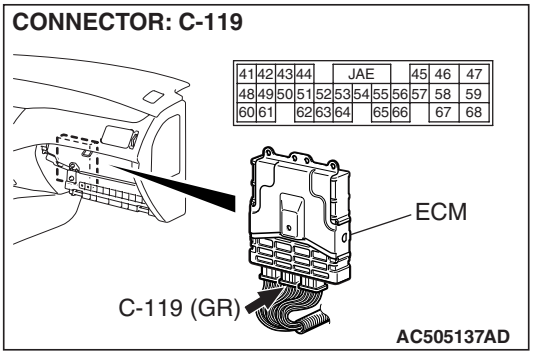

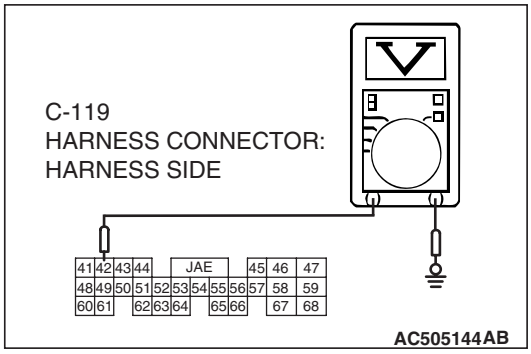

STEP 11. Measure the 5-volts reference signal at ECM connector C-117 by backprobing.

(1) Turn the ignition switch to the "ON" position.

(2) Measure the voltage between connector C-117 terminal 42 and ground by backprobing.

- The measured voltage should measure between 4.9 and 5.1 volts.

(3) Turn the ignition switch to the "LOCK" (OFF) position.

Q: Is the measured voltage between 4.9 and 5.1 volts?

YES : Go to Step 12.

NO : Go to Step 14.

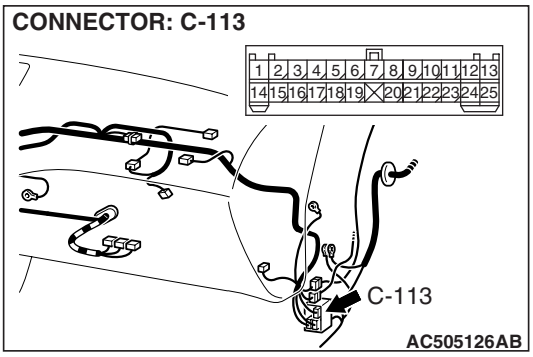

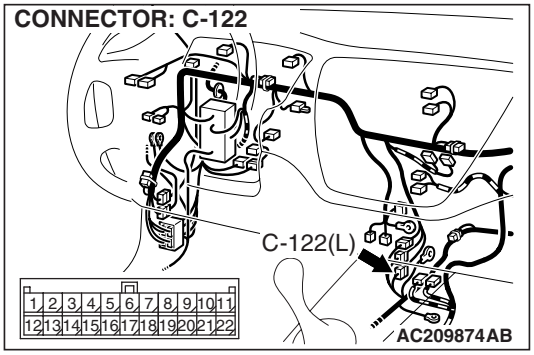

STEP 12. Check intermediate connectors C-113, C-122 and D-35, and ECM connector C-117 and fuel tank differential pressure sensor connector for D-09 loose, corroded or damaged terminals, or terminals pushed back in the connector.

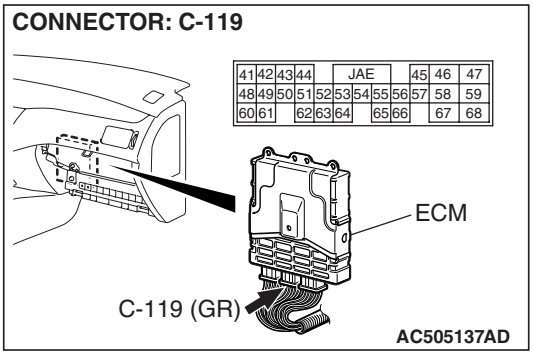

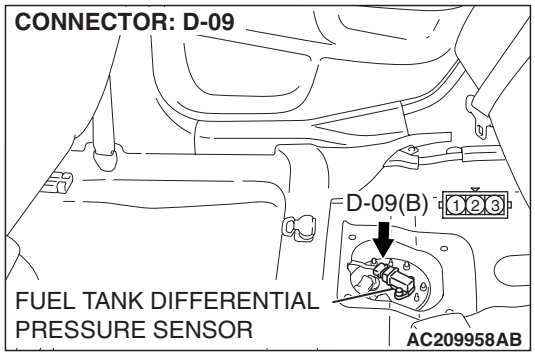

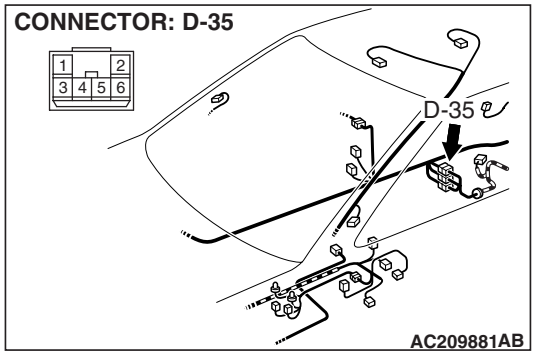

Q: Are the connectors and terminals in good condition?

YES : Go to Step 13.

NO : Repair or replace the faulty component. Go to Step 15.

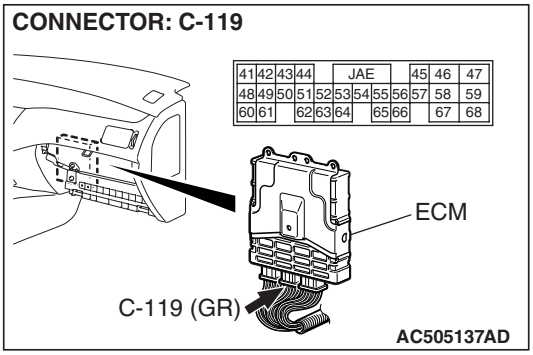

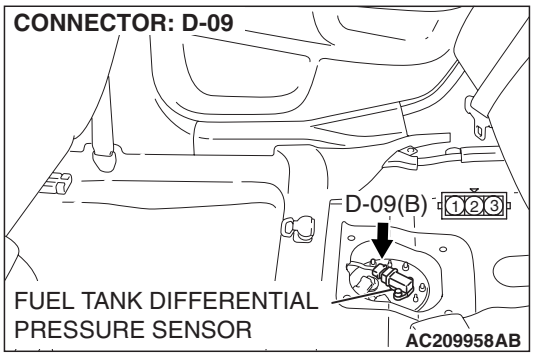

STEP 13. Check the harness wire between ECM connector C-117 terminal 42 and fuel tank differential pressure sensor connector D-09 terminal 3 for damage.

Q: Is the harness wire in good condition?

YES : It can be assumed that this malfunction is intermittent. Refer to GROUP 00, How to Use Troubleshooting/Inspection Service Points - How to Cope with intermittent Malfunction P.00-13. Go to Step 15.

NO : Repair or replace the harness wire. Go to Step 15.

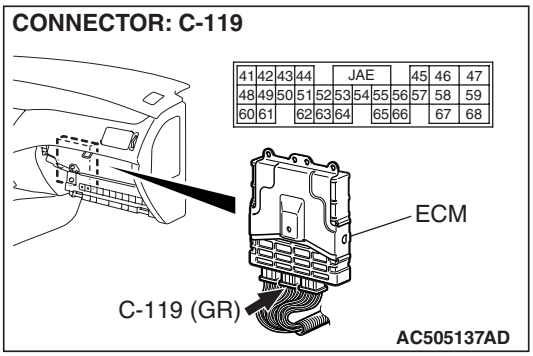

STEP 14. Check ECM connector C-117 for loose, corroded or damaged terminals, or terminals pushed back in the connector.

Q: Are the connector and terminals in good condition?

YES : Replace the ECM. Go to Step 15.

NO : Repair or replace the damaged components. Refer to GROUP 00E, Harness Connector Inspection P.00E-2. Go to Step 15.

STEP 15. Perform the OBD-II drive cycle.

(1) Carry out a test drive with the drive cycle pattern. Refer to Diagnostic Function –OBD-II Drive Cycle –Pattern 20 P.13A-12.

(2) Read the diagnostic trouble code (DTC).

Q: Is DTC P0452 set?

YES : Go to Step 2.

NO : The procedure is complete.

DTC P0453: Evaporative Emission Control System Pressure Sensor High Input

SYSTEM DIAGRAM

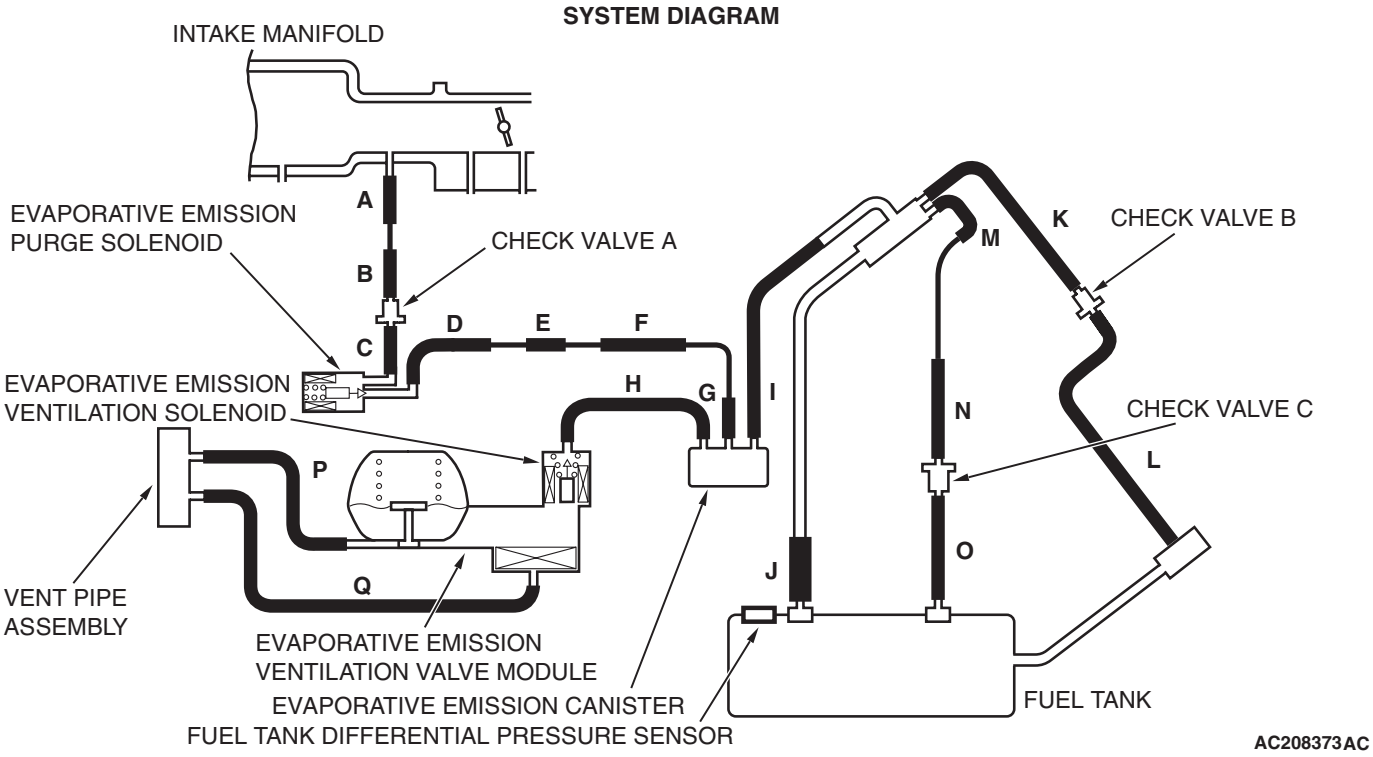

Fuel Tank Differential Pressure Sensor Circuit

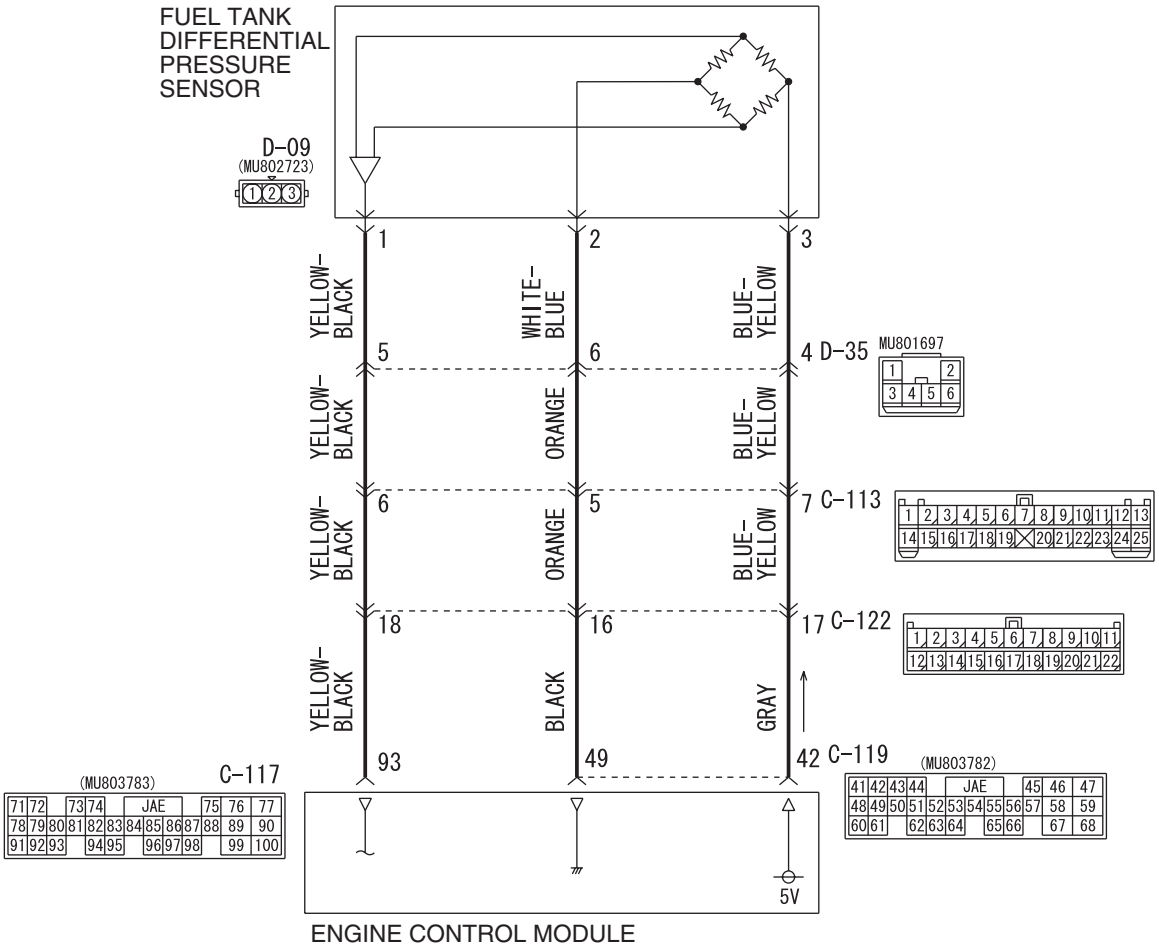

AC505150
W6J12M000A

CONNECTOR: C-113

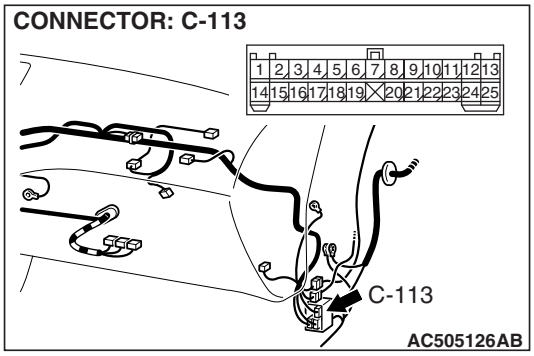

CONNECTORS: C-117, C-119

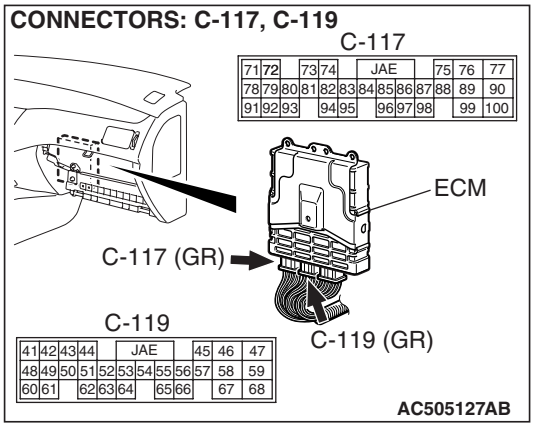

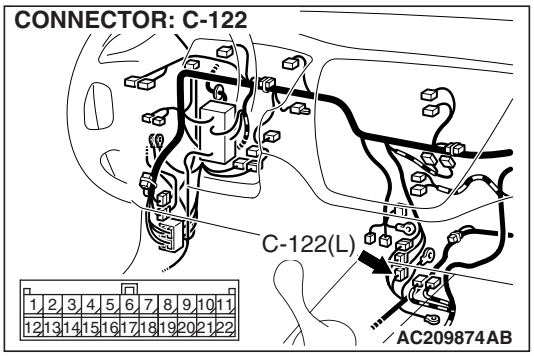

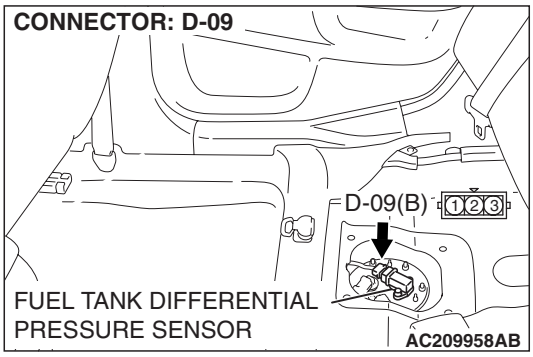

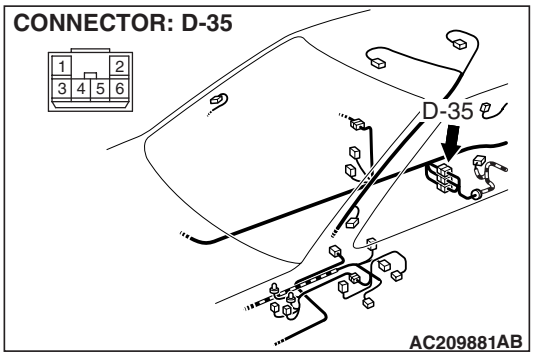

CIRCUIT OPERATION

- The ECM (terminal 42) supplies a 5-volts reference voltage to the fuel tank differential pressure sensor (terminal 3). The ECM (terminal 49) supplies a ground to the fuel tank differential pressure sensor (terminal 2).
- The ECM (terminal 93) receives a voltage signal proportional to the pressure in the fuel tank from the fuel tank differential pressure sensor (terminal 1).

TECHNICAL DESCRIPTION

- To determine whether the fuel tank differential pressure sensor is defective, the ECM monitors the fuel tank differential pressure sensor output voltage.
- Based on the test conditions and judgment criteria, the ECM determines whether the fuel tank differential pressure sensor output voltage is normal.

NOTE: In rare cases, this DTC may be also set under some fuel and driving conditions regardless of the fuel pressure sensor output voltage when the fuel system is clogged.

DESCRIPTIONS OF MONITOR METHODS

Compare purge solenoid status with fuel tank differential pressure sensor output voltage.

MONITOR EXECUTION

Continuous.

MONITOR EXECUTION CONDITIONS (OTHER MONITOR AND SENSOR)

Other Monitor (There is no temporary DTC stored in memory for the item monitored below)

- Evaporative emission purge solenoid monitor
- Evaporative emission ventilation solenoid monitor
- Fuel level sensor monitor
- Fuel temperature sensor monitor

Sensor (The sensors below are determined to be normal)

- Volume airflow sensor
- Barometric pressure sensor
- Intake air temperature sensor
- Engine coolant temperature sensor

LOGIC FLOW CHARTS (Monitor Sequence)

RANGE CHECK - MIN. / MAX.

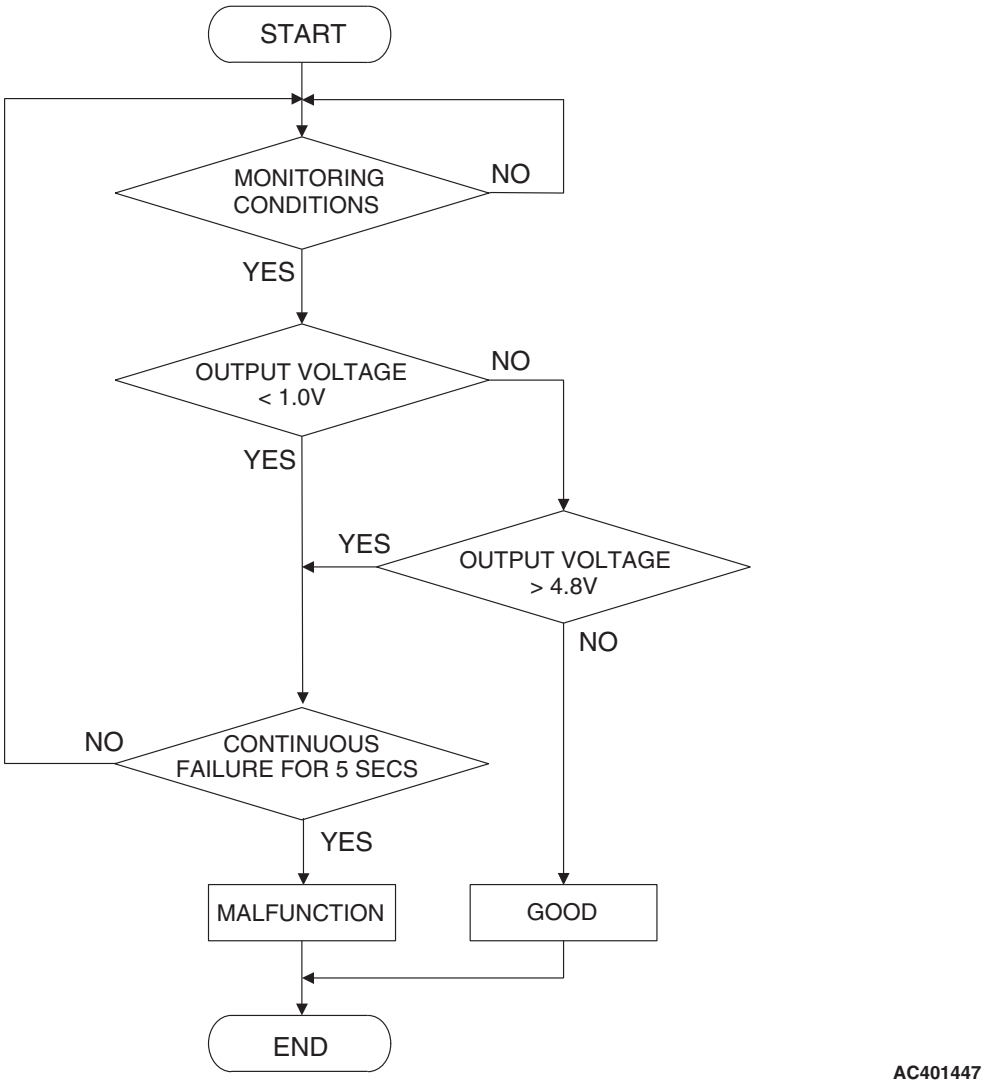

DTC SET CONDITIONS

Test Conditions: For Test to Run

- 2 seconds or more have passed since the starting sequence was completed.
- The fuel temperature is 36° C (97° F) or less.
- Remaining fuel level is 85 percent or less when the engine is started.

Judgement Criterion

- The fuel tank differential pressure sensor output voltage remains 4.8 volt or greater for 5 seconds.

OBD-II DRIVE CYCLE PATTERN

Refer to Diagnostic Function –OBD-II Drive Cycle – Pattern 20 P.13A-12.

TROUBLESHOOTING HINTS (THE MOST LIKELY CAUSES FOR THIS CODE TO BE SET ARE:)

- Malfunction of the fuel tank differential pressure sensor.
- Open or shorted fuel tank differential pressure sensor circuit.
- Malfunction of the ECM.

OVERVIEW OF TROUBLESHOOTING

- DTC P0453 can be set by a faulty fuel differential pressure sensor or related circuit, or ECM failure.
- To check a system blockage, do a performance test which uses a mechanical vacuum gauge and scan tool MB991958 set on the fuel tank differential pressure sensor (TANK PRS SNSR73.) The mechanical gauge reading is used to verify the scan tool reading. A comparison of the mechanical gauge with the reading on scan tool MB991958 will locate a problem in the system.

DIAGNOSIS

Required Special Tools:

- MB991958: Scan Tool (M.U.T.-III Sub Assembly)
  - MB991824: V.C.I.
  - MB991827: USB Cable
  - MB991911: Main Harness B
- MB991658: Test Harness Set

STEP 1. Using scan tool MB991958, check data list item 73: Fuel Tank Differential Pressure Sensor.

⚠ CAUTION

To prevent damage to scan tool MB991958, always turn the ignition switch to the "LOCK" (OFF) position before connecting or disconnecting scan tool MB991958.

(1) Connect scan tool MB991958 to the data link connector.

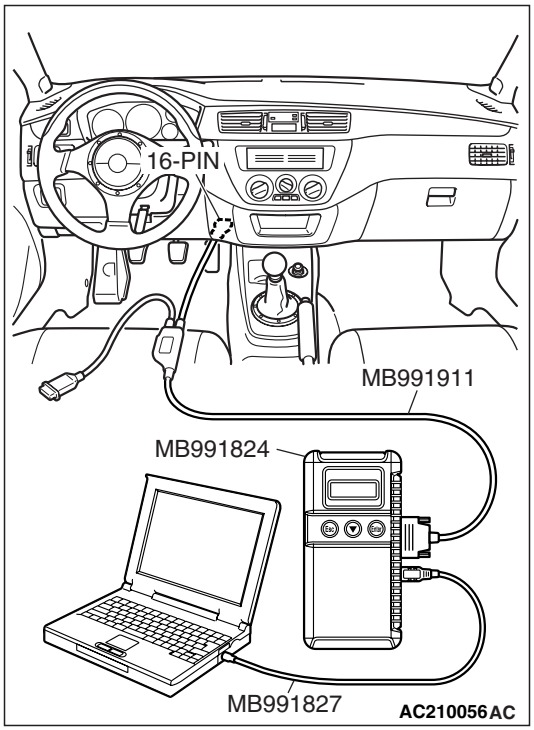

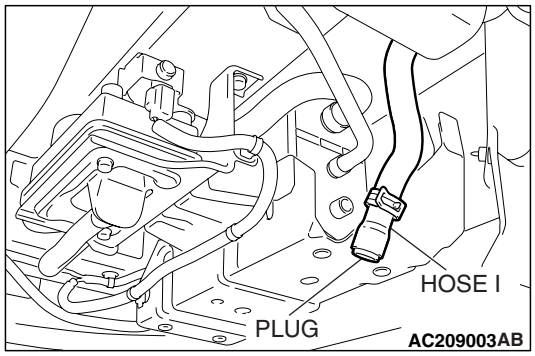

(2) Disconnect hose I from the evaporative emission canister, and plug the hose.
(3) Set scan tool MB991958 to the data reading mode for item 73, Fuel Tank Differential Pressure Sensor.
- The fuel tank pressure reading on the scan tool should be –1.5 to 1.5 kPa (–0.443 to 0.443 inHg).

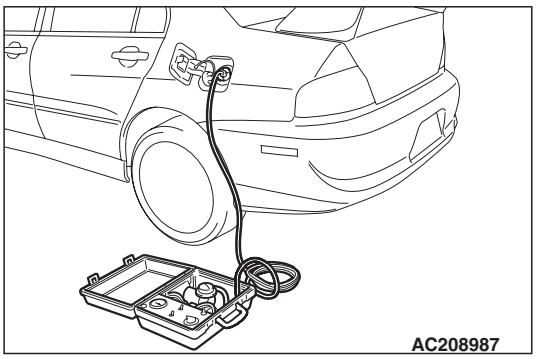

(4) Connect an evaporative emission system pressure pump (Miller number 6872A) to the fuel tank filler tube and pressurize the fuel tank.
- The fuel tank pressure reading should increase.

(5) Turn the ignition switch to the "LOCK" (OFF) position. Then disconnect scan tool MB991958.
(6) Disconnect the evaporative emission system pressure pump, and reinstall the fuel cap.
(7) Connect hose I to the canister.

Q: Is the fuel tank pressure between –1.5 and 1.5 kPa (–0.443 and 0.443 inHg)?

YES : It can be assumed that this malfunction is intermittent. Refer to GROUP 00, How to Use Troubleshooting/Inspection Service Points – Intermittent Malfunction P.00-13. Go to Step 15.

NO : Go to Step 2.

STEP 2. Measure the signal voltage at fuel tank differential pressure sensor connector D-09.

(1) Remove the rear seat assembly (Refer to GROUP 52A, Rear Seat P.52A-22).
(2) Remove the floor pan access panel.

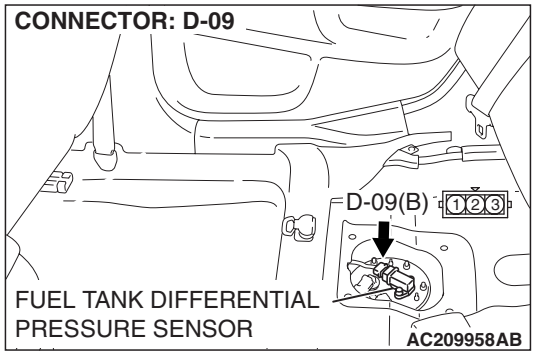

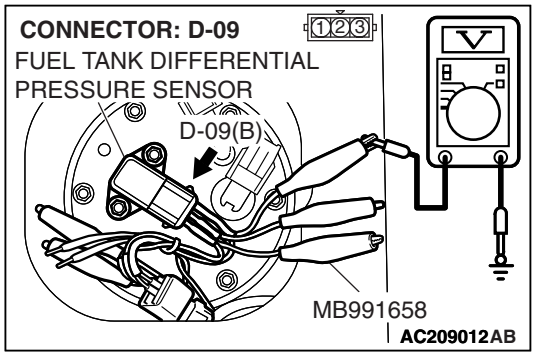

(3) Use special tool Test Harness Set (MB991658) to connect terminals 1,2 and 3 of the fuel tank differential pressure sensor connector D-09.
(4) Turn the ignition switch to the "ON" position.
(5) Remove the fuel cap.
(6) Measure the voltage between connector D-09 terminal 1 and ground.
- The measured voltage should measure between 2.0 and 3.0 volts.

(7) Turn the ignition switch to the "LOCK" (OFF) position.

Q: Is the measured voltage between 2.0 and 3.0 volts?

YES : Go to Step 3.
NO : Go to Step 7.

STEP 3. Measure the signal voltage at ECM connector C-119 by backprobing.

(1) Do not disconnect ECM connector C-119.
(2) Turn the ignition switch to the "ON" position.
(3) Remove the fuel cap.

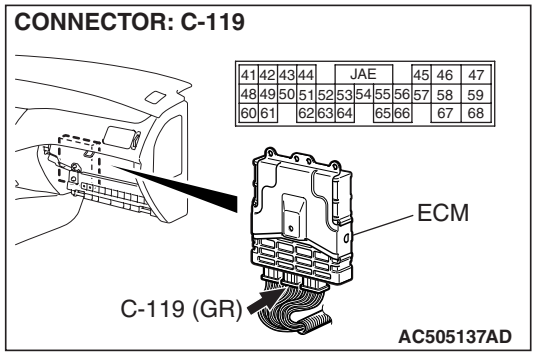

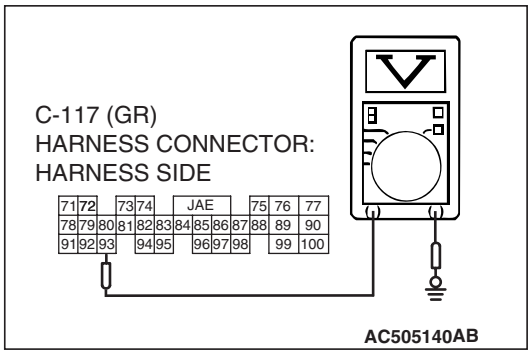

(4) Measure the voltage between connector C-119 terminal 93 and ground by backprobing.
- The measured voltage should measure between 2.0 and 3.0 volts.

(5) Turn the ignition switch to the "LOCK" (OFF) position.

Q: Is the measured voltage between 2.0 and 3.0 volts?

YES : Go to Step 4.
NO : Go to Step 5.

STEP 4. Using scan tool MB991958, check data list item 73: Fuel Tank Differential Pressure Sensor.

⚠ CAUTION

To prevent damage to scan tool MB991958, always turn the ignition switch to the "LOCK" (OFF) position before connecting or disconnecting scan tool MB991958.

(1) Connect scan tool MB991958 to the data link connector.

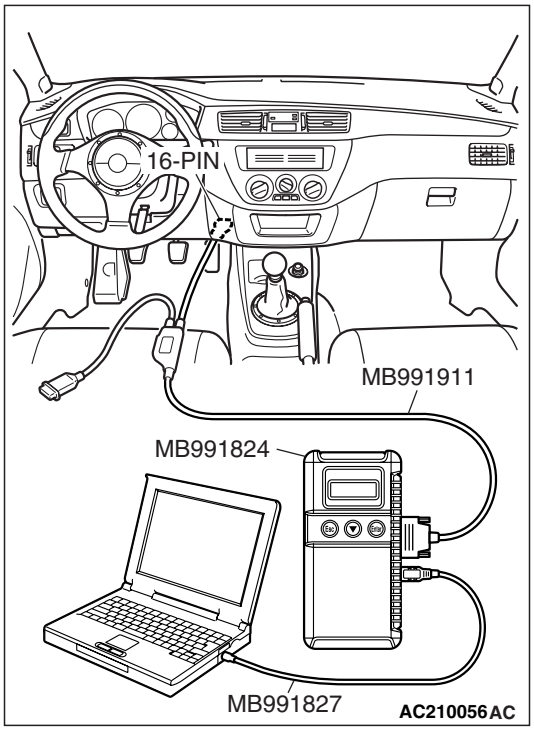

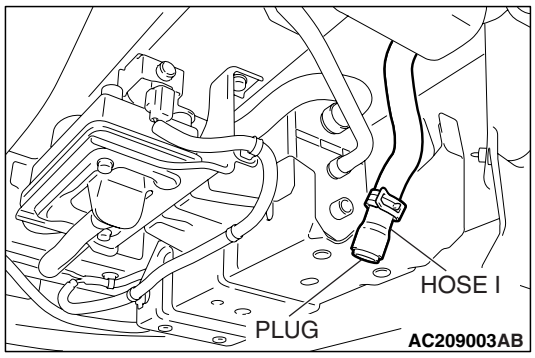

(2) Disconnect hose I from the evaporative emission canister, and plug the hose.
(3) Turn the ignition switch to the "ON" position.
(4) Remove the fuel cap.
(5) Set scan tool MB991958 to the data reading mode for item 73, Fuel Tank Differential Pressure Sensor.
   - The fuel tank pressure reading on the scan tool should be –1.5 to 1.5 kPa (–0.443 to 0.443 inHg).

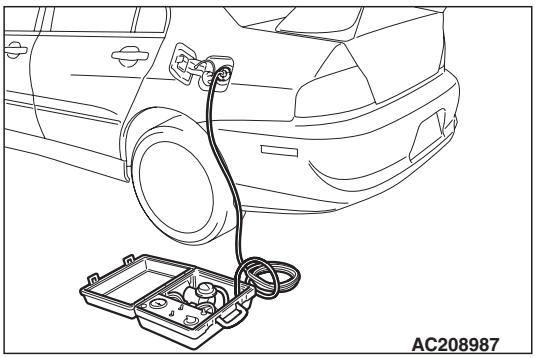

(6) Connect an evaporative emission system pressure pump (Miller number 6872A) to the fuel tank filler tube and pressurize the fuel tank.
   - The fuel tank pressure reading should increase.
(7) Turn the ignition switch to the "LOCK" (OFF) position.
(8) Disconnect the evaporative emission system pressure pump, and reinstall the fuel cap.
(9) Connect hose I to the canister.

Q: Is the fuel tank pressure between –1.5 and 1.5 kPa (–0.443 and 0.443 inHg)?

YES : It can be assumed that this malfunction is intermittent. Refer to GROUP 00, How to Use Troubleshooting/Inspection Service Points – Intermittent Malfunction P.00-13. Go to Step 15.

NO : Replace the ECM. Go to Step 15.

STEP 5. Check intermediate connectors C-113, C-122 and D-35, and ECM connector C-119, and fuel tank differential pressure sensor connector D-09 for loose, corroded or damaged terminals, or terminals pushed back in the connector.

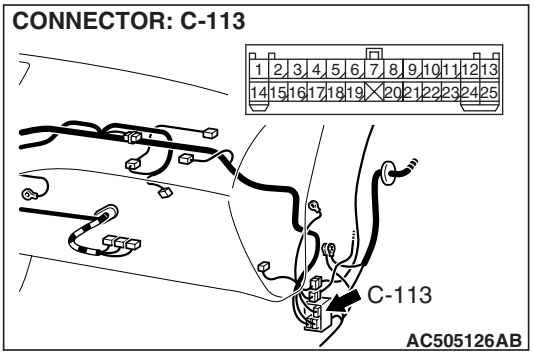

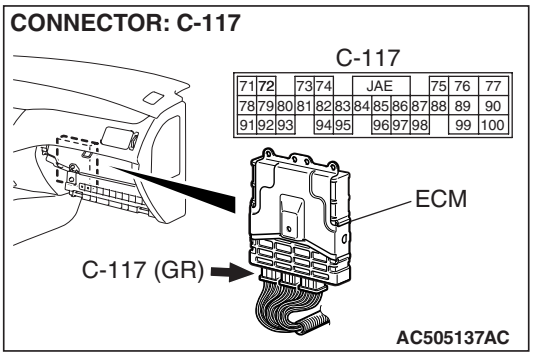

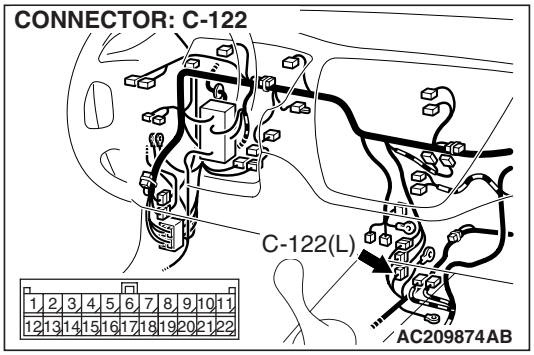

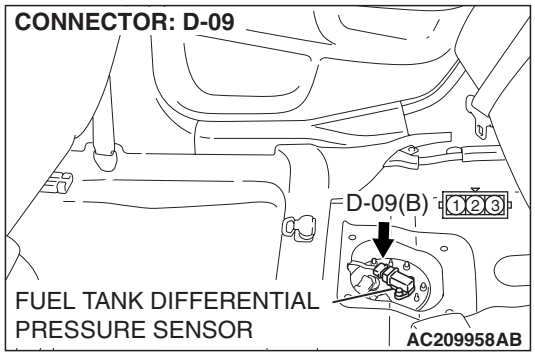

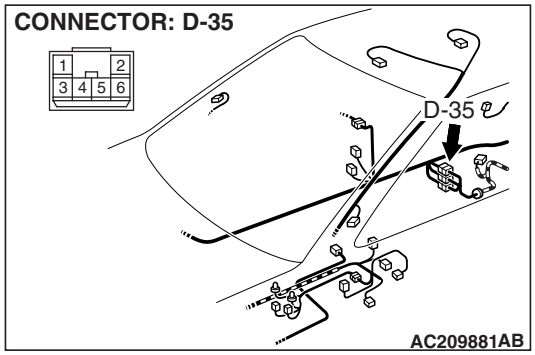

Q: Are the connectors in good condition?

YES : Go to Step 6.

NO : Repair or replace the faulty components. Refer to GROUP 00E, Harness Connector Inspection P.00E-2. Go to Step 15.

STEP 6. Check the harness wire between ECM connector C-119 terminal 93 and intermediate connector D-09 terminal 1 for damage.

Q: Is the harness wire in good condition?

YES : This malfunction is intermittent. Refer to GROUP 00, How to Use Troubleshooting/Inspection Service Points - How to Cope with Intermittent Malfunction P.00-13. Go to Step 15.

NO : Repair the damaged harness wire. Go to Step 15.

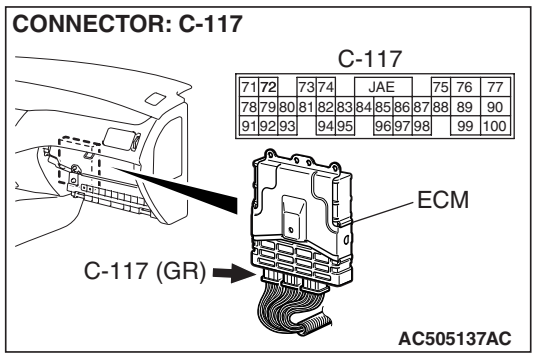

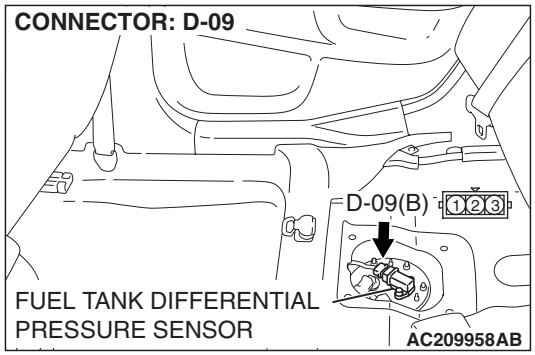

STEP 7. Measure the 5-volt reference signal at fuel tank differential pressure sensor connector D-09.

(1) Disconnect fuel tank differential pressure sensor connector D-09.

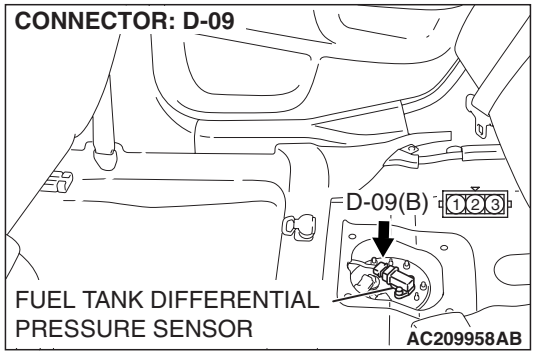

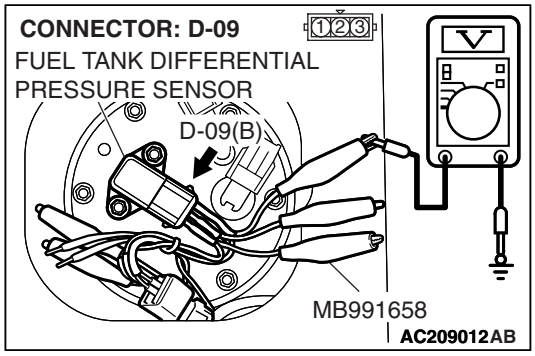

(2) Use special tool MB991658 to connect terminals 1, 2 and 3 of connector D-09.
(3) Turn the ignition switch to the "ON" position.
(4) Measure the voltage between terminal 3 and ground.
- The voltage should measure between 4.9 and 5.1 volts.

(5) Turn the ignition switch to the "LOCK" (OFF) position.

Q: Is the measured voltage between 4.9 and 5.1 volts?

YES : Go to Step 8.
NO : Go to Step 11.

STEP 8. Measure the return circuit voltage at fuel tank differential pressure sensor connector D-09.

(1) Disconnect fuel tank differential pressure sensor connector D-09.

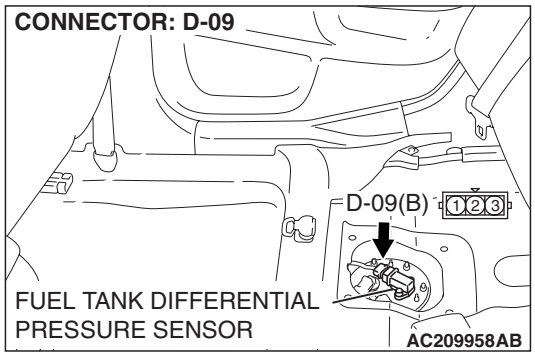

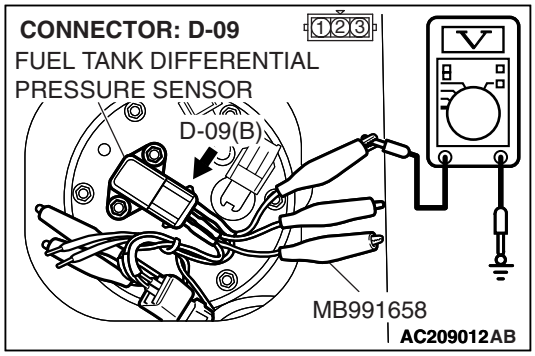

(2) Use special tool MB991658 to connect terminal 3 of connector D-09.
(3) Turn the ignition switch to the "ON" position.
(4) Measure the voltage between terminal 2 and ground.
- The voltage should measure 0.5 volt or less.

(5) Turn the ignition switch to the "LOCK" (OFF) position.

Q: Is the measure voltage 0.5 volt or less?

YES : Go to Step 9.
NO : Replace the fuel tank differential pressure sensor. Go to Step 15.

STEP 9. Check intermediate connectors C-113, C-122 and D-35, and ECM connector C-117,C-119 and fuel tank differential pressure sensor connector for D-09 loose, corroded or damaged terminals, or terminals pushed back in the connector.

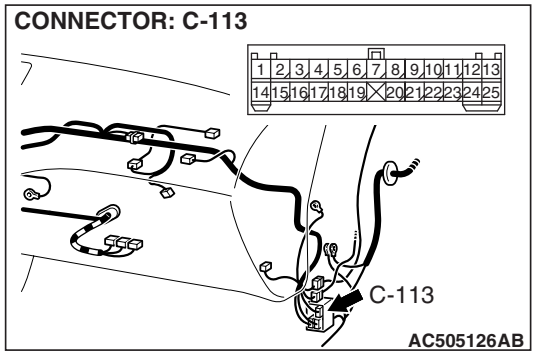

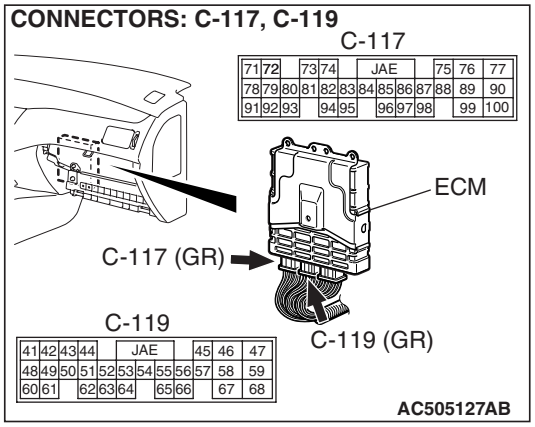

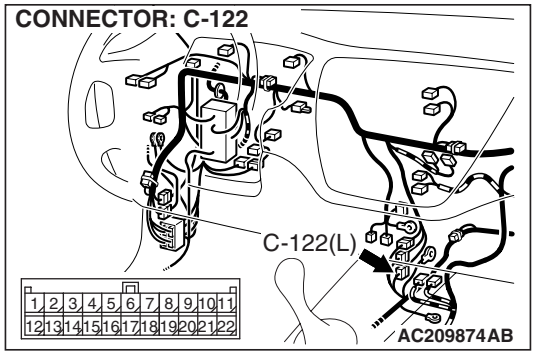

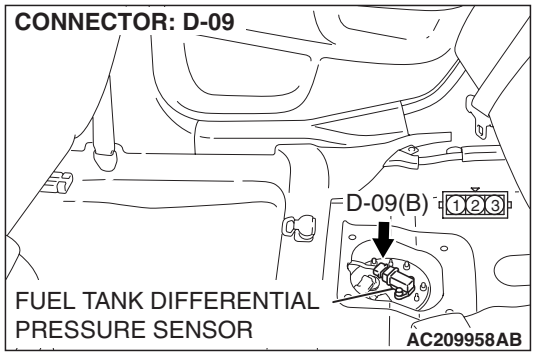

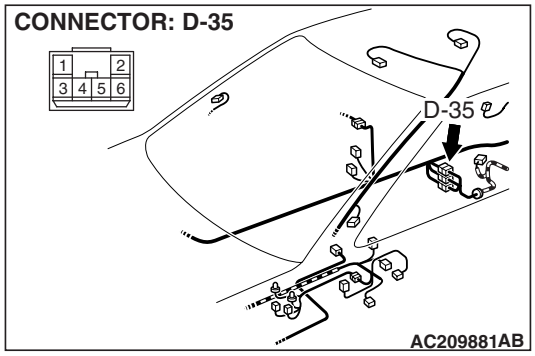

Q: Are the connectors and terminals in good condition?

YES : Go to Step 10.

NO : Repair or replace the damage components. Refer to GROUP 00E, Harness Connector Inspection P.00E-2. Go to Step 15.

STEP 10. Check the harness wire between ECM connector C-117 terminal 49 and fuel tank differential pressure sensor connector D-09 terminal 2 for damage.

Q: Is the harness wire in good condition?

YES : Replace the fuel tank differential pressure sensor. Go to Step 15.

NO : Repair or replace the harness wire. Go to Step 15.

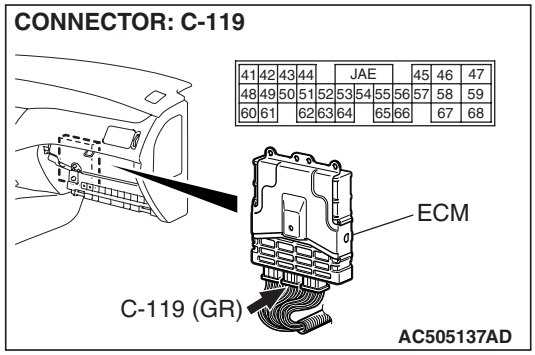

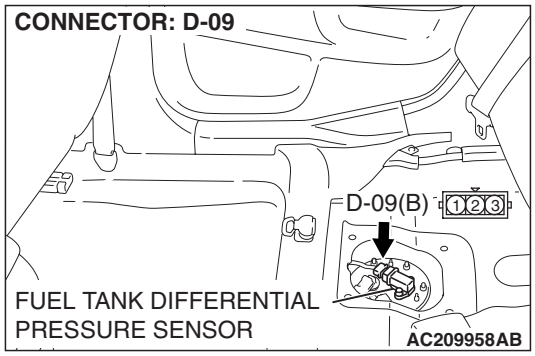

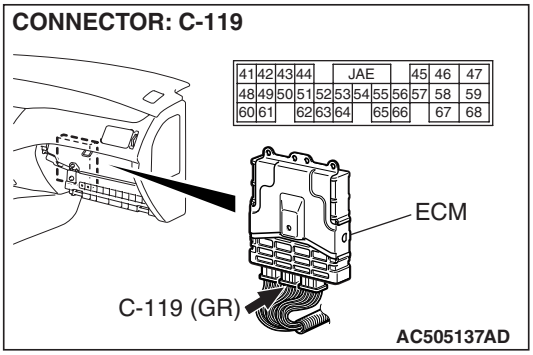

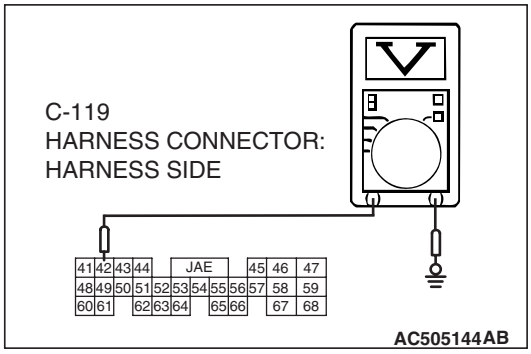

STEP 11. Measure the 5-volt reference signal at ECM connector C-117 by backprobing.

(1) Turn the ignition switch to the "ON" position.

(2) Measure the voltage between connector C-117 terminal 42 and ground by backprobing.

- The measured voltage should measure between 4.9 and 5.1 volts.

(3) Turn the ignition switch to the "LOCK" (OFF) position.

Q: Is the measured voltage between 4.9 and 5.1 volts?

YES : Go to Step 12.

NO : Go to Step 14.

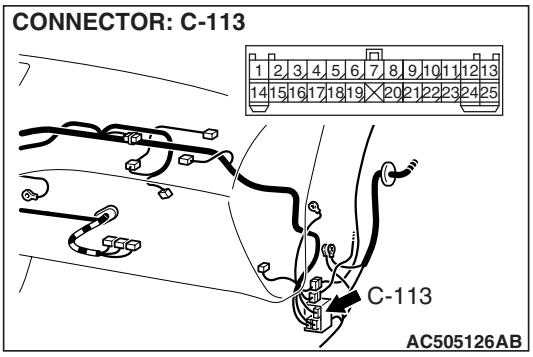

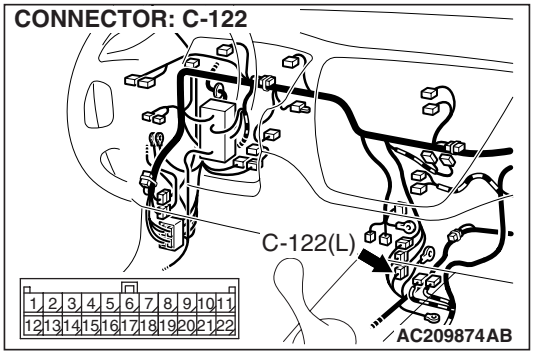

STEP 12. Check intermediate connectors C-113, C-122 and D-35, and ECM connector C-117 and fuel tank differential pressure sensor connector for D-09 loose, corroded or damaged terminals, or terminals pushed back in the connector.

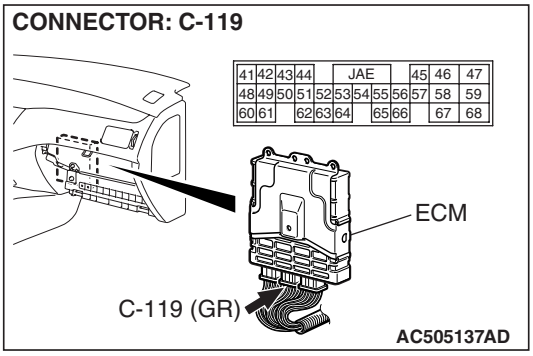

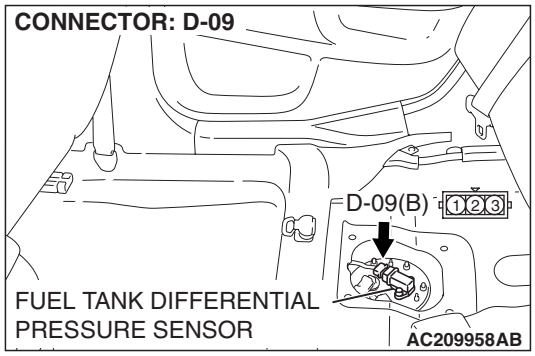

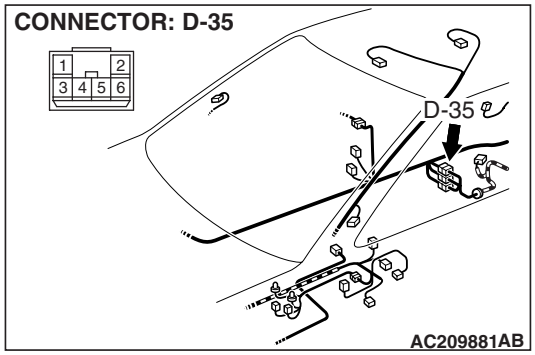

Q: Are the connectors and terminals in good condition?

YES : Go to Step 13.

NO : Repair or replace the faulty component. Go to Step 15.

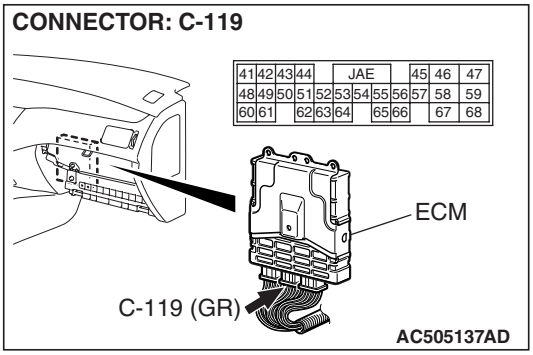

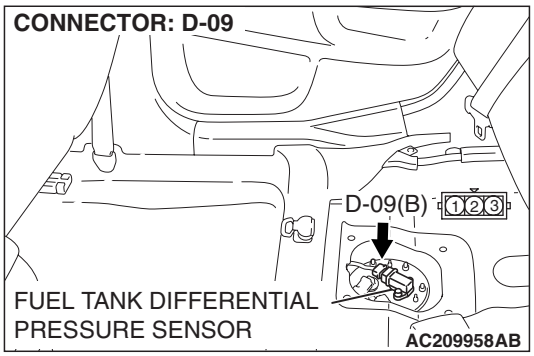

STEP 13. Check the harness wire between ECM connector C-117 terminal 42 and fuel tank differential pressure sensor connector D-09 terminal 3 for damage.

Q: Is the harness wire in good condition?

YES : It can be assumed that this malfunction is intermittent. Refer to GROUP 00, How to Use Troubleshooting/Inspection Service Points - How to Cope with intermittent Malfunction P.00-13. Go to Step 15.

NO : Repair or replace the harness wire. Go to Step 15.

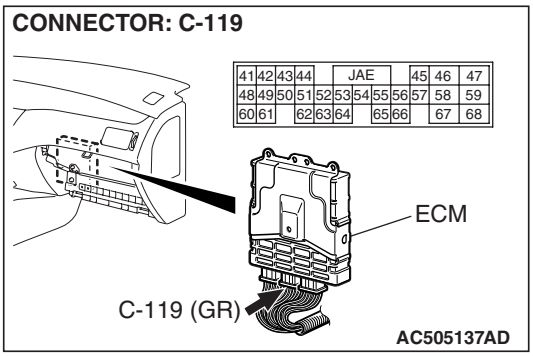

STEP 14. Check ECM connector C-117 for loose, corroded or damaged terminals, or terminals pushed back in the connector.

Q: Are the connector and terminals in good condition?

YES : Replace the ECM. Go to Step 15.

NO : Repair or replace the damaged components. Refer to GROUP 00E, Harness Connector Inspection P.00E-2. Go to Step 15.

STEP 15. Perform the OBD-II drive cycle.

(1) Carry out a test drive with the drive cycle pattern. Refer to Diagnostic Function –OBD-II Drive Cycle –Pattern 20 P.13A-12.

(2) Read the diagnostic trouble code (DTC).

Q: Is DTC P0453 set?

YES : Go to Step 2.

NO : The procedure is complete.

DTC P0455: Evaporative Emission System Leak Detected (Gross Leak)

SYSTEM DIAGRAM

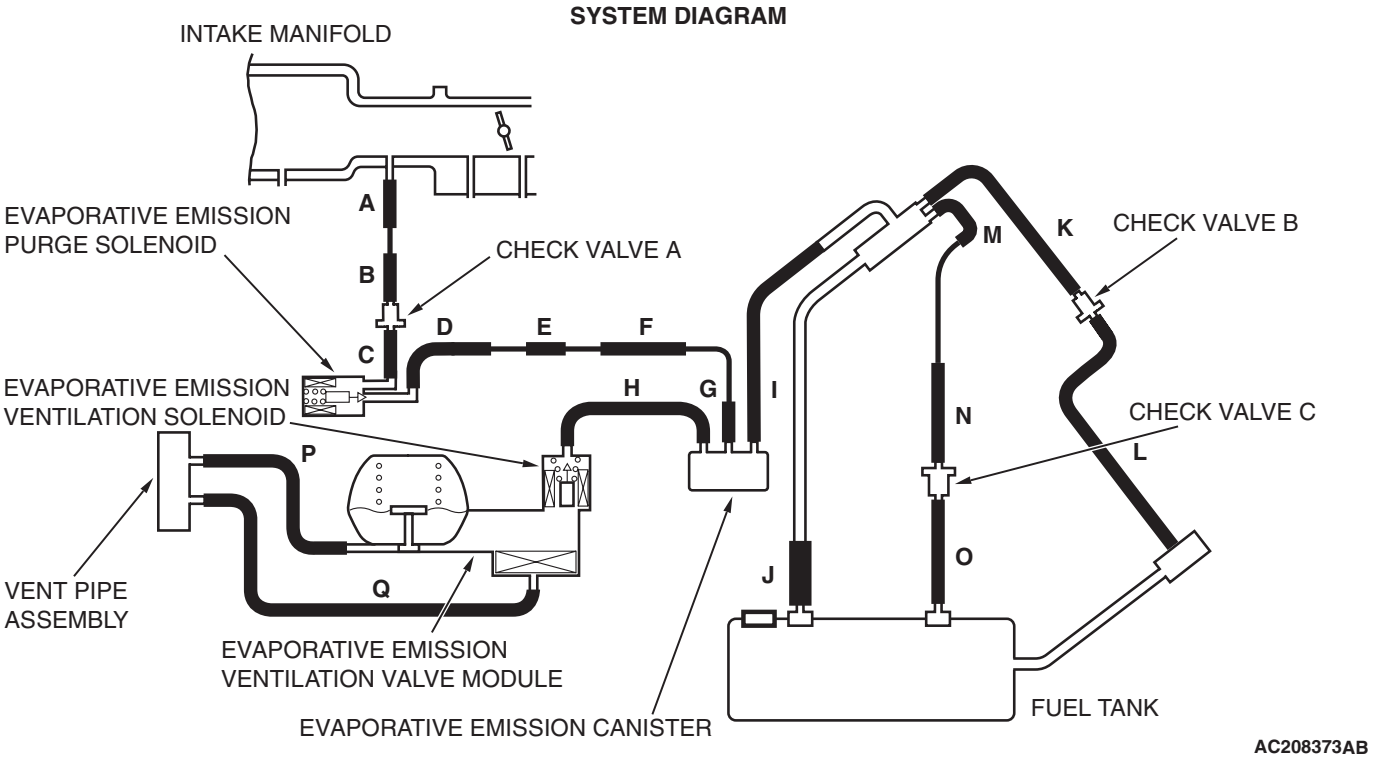

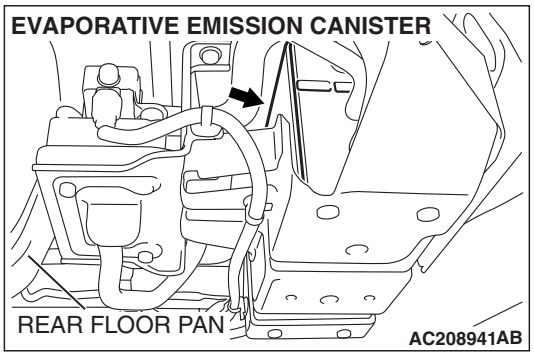

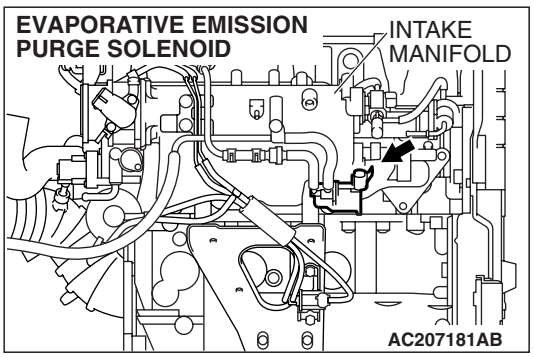

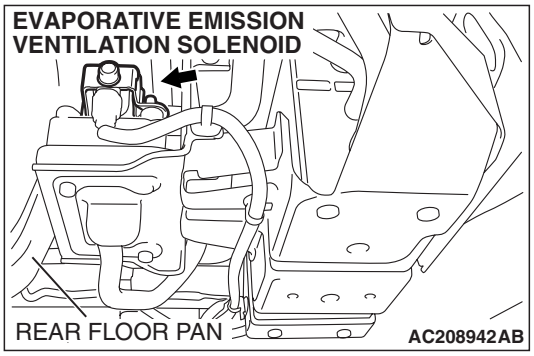

TECHNICAL DESCRIPTION

- The fuel tank may be under a slight pressure or vacuum depending on the state of the evaporative emission (EVAP) system. The ECM monitors and responds to these pressure/vacuum changes. If the pressure/vacuum varies from the specified range, the ECM will set DTC P0455.
- The ECM energizes the evaporative emission ventilation solenoid to shut off the evaporative emission canister outlet port.
- The evaporative emission purge solenoid is activated to apply engine manifold vacuum to the EVAP system.
- When the fuel system develops a vacuum of 2 kPa (0.29 psi), the evaporative emission purge solenoid is turned "off" and the fuel system vacuum is maintained at 2 kPa (0.29 psi).
- The ECM determines whether there is a leak or clog in the fuel system by measuring the change in vacuum inside the fuel tank.
- The test is stopped when fuel vapor pressure is determined to be too high.

DESCRIPTIONS OF MONITOR METHODS

- Depressurizing EVAP system by intake manifold negative pressure is impossible within specified period.

MONITOR EXECUTION

- Once per driving cycle.

MONITOR EXECUTION CONDITIONS (OTHER MONITOR AND SENSOR)

Other Monitor (There is no temporary DTC stored in memory for the item monitored below)

- Evaporative emission purge solenoid monitor
- Evaporative emission purge system monitor
- Fuel tank differential pressure sensor monitor
- Evaporative emission ventilation solenoid monitor
- Fuel level sensor monitor
- Fuel temperature sensor monitor

Sensor (The sensors below are determined to be normal)

- Volume airflow sensor
- Barometric pressure sensor
- Intake air temperature sensor
- Engine coolant temperature sensor

LOGIC FLOW CHARTS (Monitor Sequence)

0.04in, 0.02in GROSS LEAK MONITOR

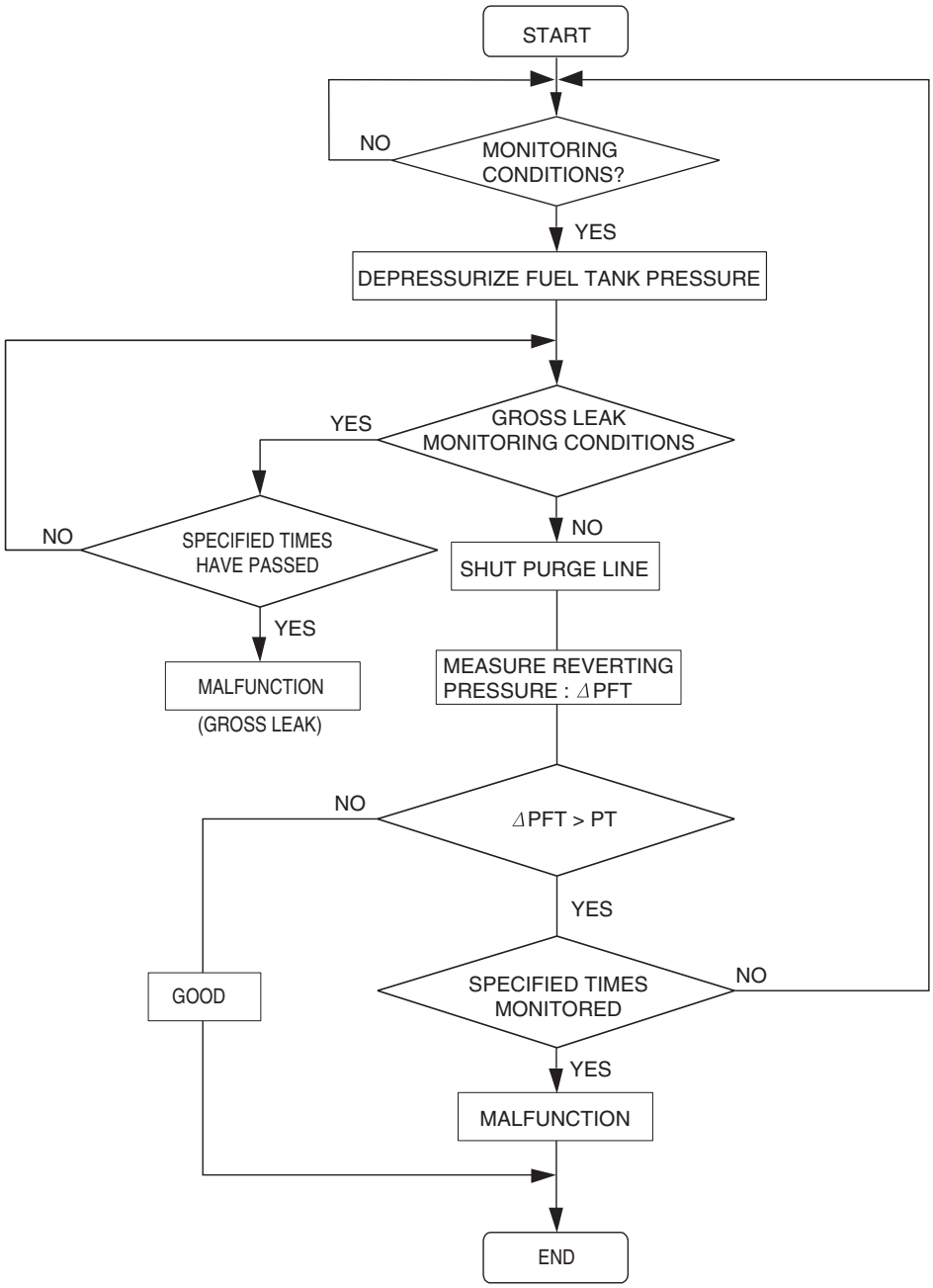

AC306649

DTC SET CONDITIONS

Check Conditions A: At Start up

- Intake air temperature is 36° C (97° F) or less upon engine start up.
- The engine coolant temperature is 36° C (97° F) or less upon engine start up.

Check Conditions B: For Test to Run

- Engine coolant temperature is greater than 60° C (140° F) When the amount of remaining fuel is 15 – 40 percent of capacity upon engine start up.
- Engine coolant temperature is greater than 20° C (68° F) when the amount of remaining fuel is 40 – 85 percent of capacity upon engine start up.
- The engine speed is greater than or equal to 1,600 r/min.

- Barometric pressure is greater than 76 kPa (11 psi).
- Volumetric efficiency is between 20 and 70 percent.
- The fuel temperature is 36° C (97° F) or less.
- The fuel tank differential pressure sensor output voltage is 1 – 4 volts.

Check Conditions C: For Test to Stop

- The intake air temperature is greater than 5° C (41° F).
- When the evaporative emission purge solenoid and evaporative emission ventilation solenoid are closed, the pressure in the fuel tank rises to 451 Pa (0.065 psi) or less and the amount of remaining fuel is 15 – 40 percent of capacity upon engine start up.
- When the evaporative emission purge solenoid and evaporative emission ventilation solenoid are closed, the pressure in the fuel tank rises to 324 Pa (0.047 psi) or less and the amount of remaining fuel is 40 – 85 percent of capacity upon engine start up.
- 10 seconds have elapsed from the start of the previous monitoring.
- Monitoring time: 170 seconds.

Judgement Criterion

- The fuel tank internal pressure is greater than 2 kPa (0.29 psi) after the evaporative emission purge solenoid has been driven when the fuel tank and vapor line were closed.

OBD-II DRIVE CYCLE PATTERN

Refer to Diagnostic Function –OBD-II Drive Cycle – Pattern 5 P.13A-12.

TROUBLESHOOTING HINTS (THE MOST LIKELY CAUSES FOR THIS CODE TO BE SET ARE:)

- Loose fuel cap.
- Fuel cap relief pressure is incorrect.
- Fuel overflow limiter valve failed.
- Purge line or vapor line is clogged.
- Fuel tank, purge line or vapor line seal failed.
- Evaporative emission purge solenoid valve failed.
- Evaporative emission ventilation solenoid valve failed.
- Fuel tank differential pressure sensor failed.
- Evaporative emission canister seal is faulty.
- Evaporative emission canister is clogged.

DIAGNOSIS

Required Special Tools:

- MB991958: Scan Tool (M.U.T.-III Sub Assembly)
  - MB991824: V.C.I.
  - MB991827: USB Cable
  - MB991911: Main Harness B

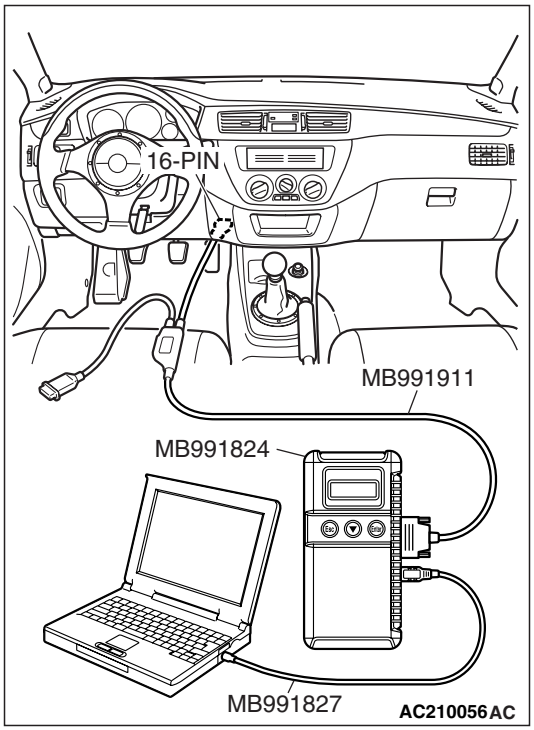

STEP 1. Using scan tool MB991958, check the evaporative emission system monitor test.

⚠ CAUTION

- **To prevent damage to scan tool MB991958, always turn the ignition switch to the "LOCK" (OFF) position before connecting or disconnecting scan tool MB991958.**
- **During this test, the ECM will automatically increase the engine speed to 1,600 r/min or greater. Check that the transaxle is set to the neutral position.**

(1) Connect scan tool MB991958 to the data link connector.
(2) Turn the ignition switch to the "ON" position.
(3) Erase the DTCs using scan tool MB991958.
(4) Check that the fuel cap is securely closed. (Tighten until three clicks are heard.)
(5) Start the engine.
(6) Select "System Test."
(7) Select "Evap Leak Mon."
(8) During this test, keep the accelerator pedal at the idle position.
(9) Keep the engine speed and engine load within the specified range. When the monitor test starts, the "In Progress" item on scan tool MB991958 will change from "NO" to "YES."
(10) Turn the ignition switch to the "LOCK" (OFF) position, and disconnect scan tool MB991958.

Q: Is "Evap Leak Mon. Completed. Test Failed and DTCs Set" displayed on scan tool MB991958?

YES : A malfunction has been detected during the monitor test. Refer to the Diagnostic Trouble Code Chart and diagnose any other DTCs that are set P.13A-41. If no other DTC's have been set, go to Step 2.

NO : If "Evap Leak Mon. Completed. Test Passed" is displayed on scan tool MB991958, the evaporative emission system is working properly at this time. Explain to the customer that an improperly tightened fuel cap can cause the MIL to turn on. Return the vehicle to the customer.

NO : If "Evap Leak Mon. Discontinued. Retest again from the first" is displayed on scan tool MB991958, the EVAP monitor has been interrupted during the test. Turn the ignition switch to the "LOCK" (OFF) position once, and repeat the monitoring from Step 1.

STEP 2. Using scan tool MB991958, check actuator test item 08: Evaporative Emission Purge Solenoid Valve.

⚠ CAUTION

To prevent damage to scan tool MB991958, always turn the ignition switch to the "LOCK" (OFF) position before connecting or disconnecting scan tool MB991958.

(1) Connect scan tool MB991958 to the data link connector.

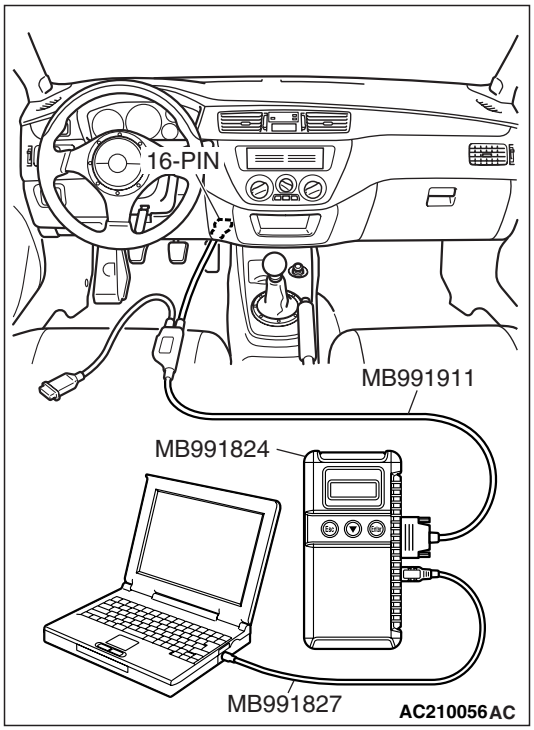

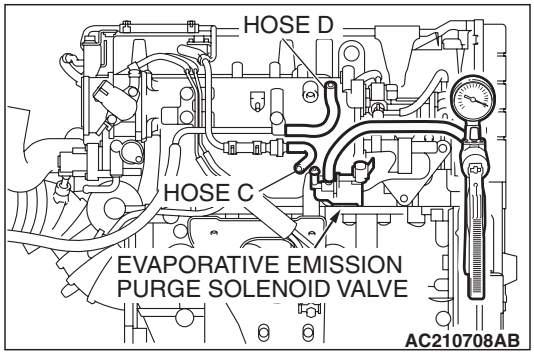

(2) Disconnect hoses C and D from the evaporative emission purge solenoid valve side, and connect the hand vacuum pump to the evaporative emission purge solenoid valve instead of hose D.
(3) Turn the ignition switch to the "ON" position.
(4) Set scan tool MB991958 to actuator test mode for item 08: Evaporative Emission Purge Solenoid Valve. When the evaporative emission purge solenoid valve is operated, apply a pressure on the hand vacuum pump and confirm that air is blown from the other side nipple.
(5) Turn the ignition switch to the "LOCK" (OFF) position.
(6) Disconnect the hand vacuum pump, and connect hoses C and D to the evaporative emission purge solenoid valve.

Q: Is the solenoid valve in good condition?

YES : Go to Step 3.
NO : Replace the evaporative emission purge solenoid valve. Go to Step 21.

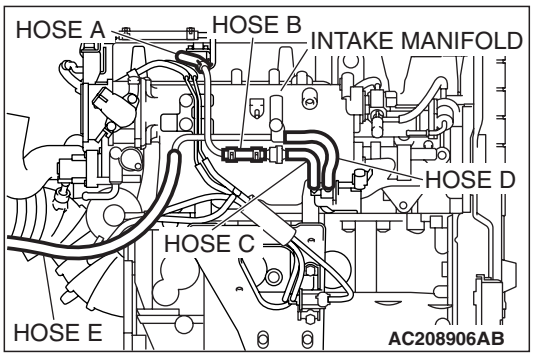

STEP 3. Check for leaks and clogging in evaporative emission system hoses A through E.

Use a hand vacuum pump to test each hose from hose A to hose E.

Q: Are the hoses in good condition?

YES : Go to Step 4.

NO : Replace the damaged hose. Go to Step 21.

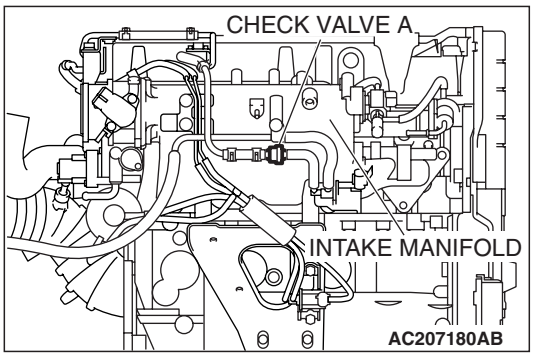

STEP 4. Test check valve A.

(1) Check valve A is a one-way check valve.

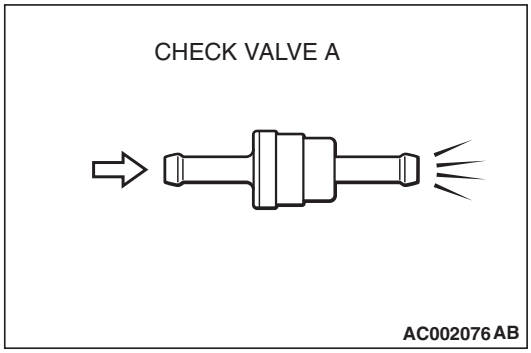

(2) Check valve A should allow air to flow in only one direction.

Q: Does check valve A allow air to pass in one direction only?

YES : Go to Step 5.

NO : Replace check valve A. Go to Step 21.

STEP 5. Using scan tool MB991958, check the evaporative emission ventilation solenoid and hose H.

⚠ CAUTION

To prevent damage to scan tool MB991958, always turn the ignition switch to the "LOCK" (OFF) position before connecting or disconnecting scan tool MB991958.

(1) Connect scan tool MB991958 to the data link connector.

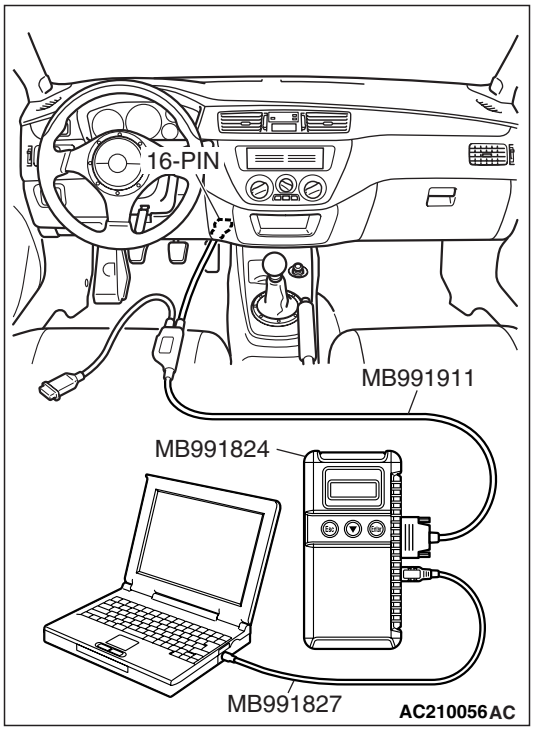

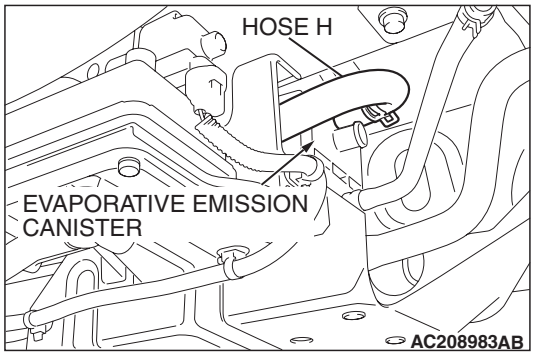

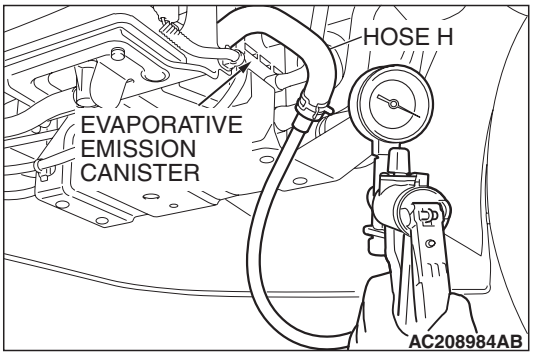

(2) Disconnect hose H from the evaporative emission canister side, and connect a hand vacuum pump.
(3) Turn the ignition switch to the "ON" position.
(4) Set scan tool MB991958 to actuator test mode for item 29: Evaporative Emission Ventilation Solenoid Valve. While the evaporative emission ventilation solenoid valve is activated, operate the hand vacuum pump and confirm that the solenoid holds vacuum.
(5) Turn the ignition switch to the "LOCK" (OFF) position and disconnect scan tool MB991958.
(6) Disconnect the hand vacuum pump, and connect hose H to the evaporative emission canister.

Q: Did the evaporative emission ventilation solenoid and hose F hold vacuum?

YES : Go to Step 7.
NO : Go to Step 6.

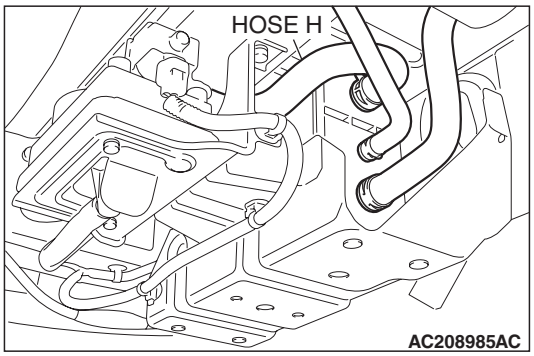

STEP 6. Check for leaks in the evaporative emission system hose H.

Perform a vacuum test using a hand vacuum pump on hose H.

Q: Is the hose in good condition?

YES : Replace the evaporative emission ventilation solenoid. Refer to GROUP 17, Evaporative Emission Canister and Fuel Tank Pressure Relief Valve P.17-21. Go to Step 21.

NO : Replace the damaged hose. Go to Step 21.

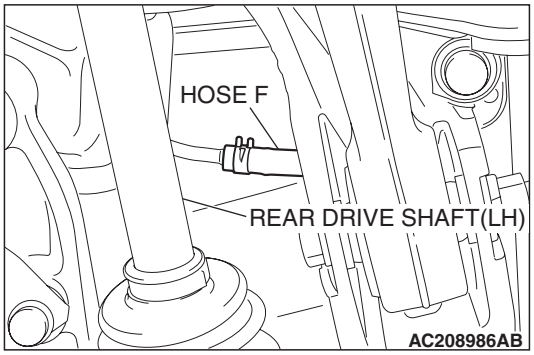

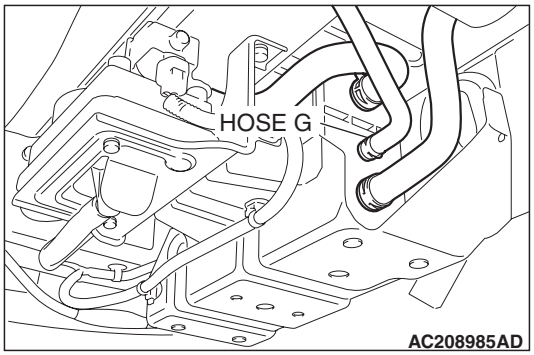

STEP 7. Check for leaks and clogging in evaporative emission system hoses F and G.

Perform a vacuum test using a hand vacuum pump on hoses F and G.

Q: Are the hoses in good condition?

YES : Go to Step 8.

NO : Replace the damaged hose. Go to Step 21.

STEP 8. Pressure test the evaporative emission system lines from hoses I to O.

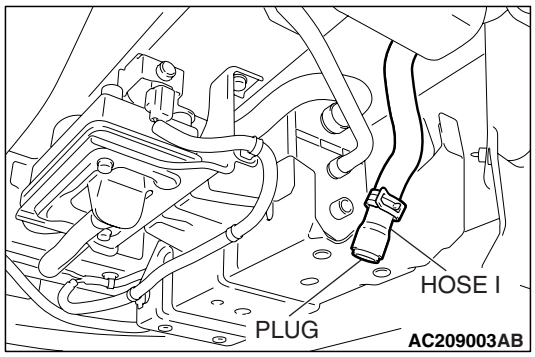

(1) Disconnect hose I from the canister, and plug hose I securely.
(2) Confirm that the evaporative emission system pressure pump (Miller number 6872A) is operating properly. Perform the self-test as described in the manufacturer's instructions.
(3) Remove the fuel cap.

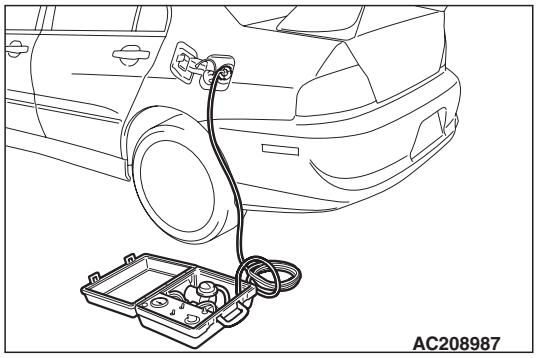

(4) Connect the evaporative emission system pressure pump to the fuel tank filler tube.
(5) Pressure test the system to determine whether any leaks are present.

NOTE: The "Pressure test" in this procedure refers to the I/M240 Simulation Test. The eight steps of this test are described in the manufacturer's instructions for the evaporative emission system pressure pump, Miller number 6872A.

(6) Disconnect the evaporative emission system pressure pump, and reinstall the fuel cap.
(7) Connect hose I to the canister.

Q: Is the evaporative emission system line free of leaks?

YES : Go to Step 15.
NO : Go to Step 9.

STEP 9. Check for vacuum leaks in evaporative emission system hoses I, K, L and M.

(1) Remove the fuel tank filler tube protector (Refer to GROUP 13B, Fuel Tank P.13B-13).

(2) Perform a leakage test with a hand vacuum pump on each hose from hoses I, K, L and M.

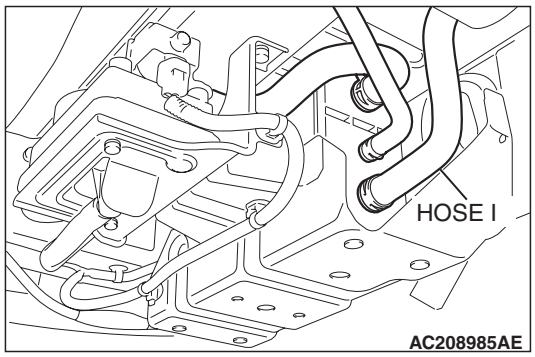

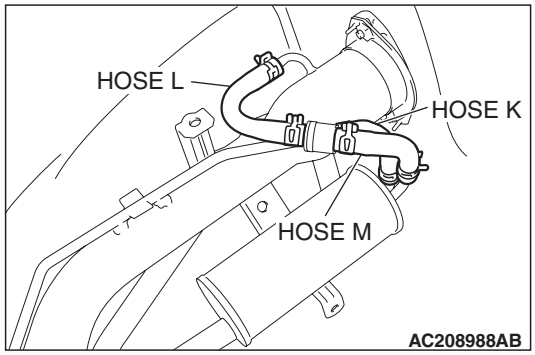

Q: Do the hoses hold vacuum?

YES : Go to Step 10.

NO : Replace the damaged hose, and reinstall the fuel tank filler tube protector. Refer to GROUP 13B, Fuel Tank P.13B-13. Go to Step 21.

STEP 10. Test check valve B.

(1) Check valve B is a one-way check valve.

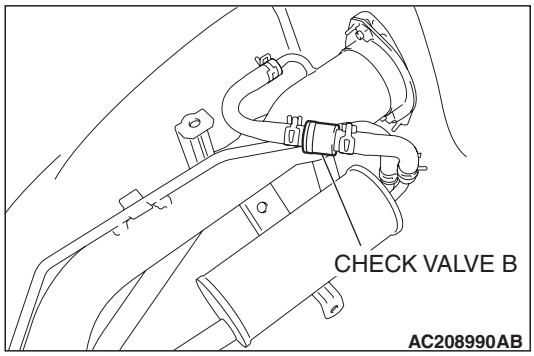

(2) Check valve B should allow air to flow in only one direction.

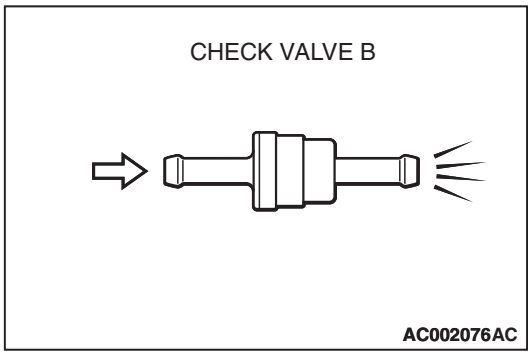

Q: Does check valve B allow air to pass in one direction only?

YES : Go to Step 11.

NO : Replace check valve B, and reinstall the fuel tank filler tube protector. Refer to GROUP 13B, Fuel Tank P.13B-13. Go to Step 21.

STEP 11. Check for vacuum leaks in evaporative emission system hoses J, N and O.

(1) Remove the fuel tank (Refer to GROUP 13B, Fuel Tank P.13B-13).

(2) Perform a leakage test with a hand vacuum pump on each hose J, N and O.

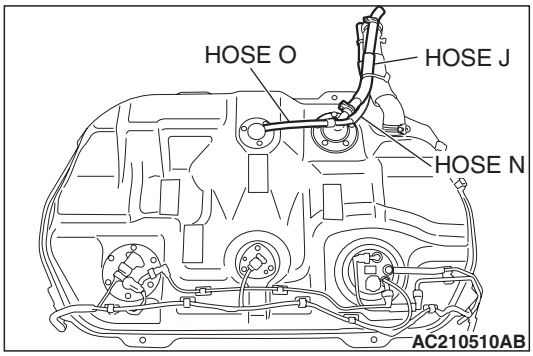

Q: Are the hoses in good condition?

YES : Go to Step 12.

NO : Replace the damaged hose, and reinstall the fuel tank. Refer to GROUP 13B, Fuel Tank P.13B-13. Go to Step 21.

STEP 12. Test check valve C.

(1) Check valve C is a one-way check valve.

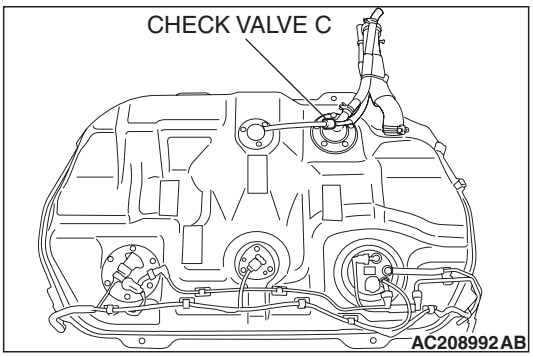

(2) Check valve C should allow air to flow in only one direction.

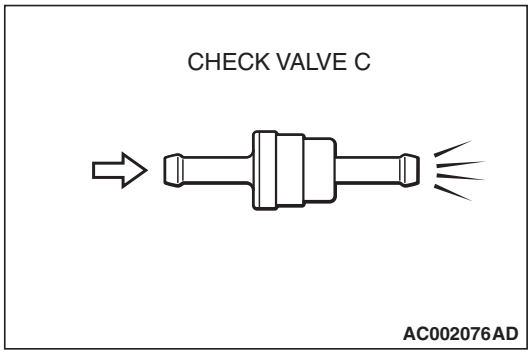

Q: Does check valve C allow air to pass in one direction only?

YES : Go to Step 13.

NO : Replace check valve C, and reinstall the fuel tank and the fuel tank filler tube protector. Refer to GROUP 13B, Fuel Tank P.13B-13. Go to Step 21 .

STEP 13. Check for leaks in the fuel tank.

(1) Visually check for cracks or other leaks in the fuel tank.

NOTE: Carefully check the fuel pump assembly and the differential pressure sensor installation in the fuel tank.

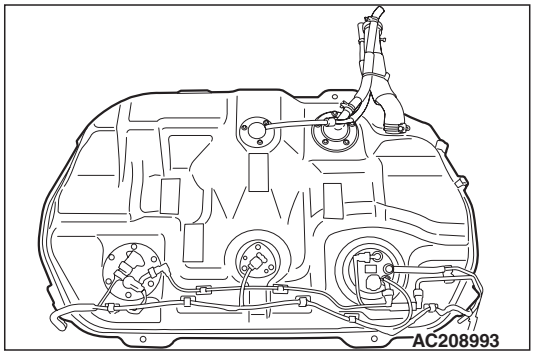

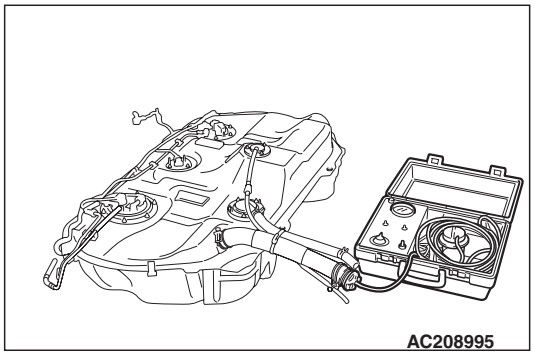

(2) Connect an evaporative emission system pressure pump (Miller number 6872A) to the filler hose.

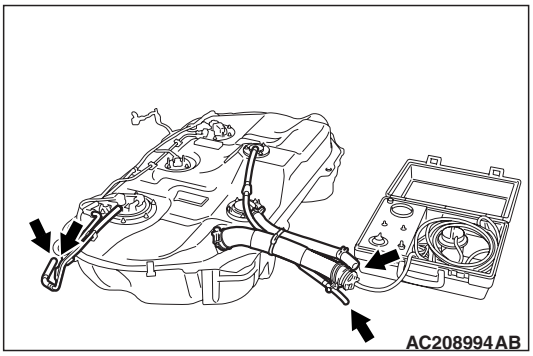

(3) Plug the hose shown in the illustration.

NOTE: If these items are not securely plugged here, the fuel could leak in the next step.

(4) Pressurize the fuel tank with the evaporative emission system pressure pump.

(5) In the pressurized state, check for leaks by applying a soapy water solution to each section and look for bubbles.

Q: Are any leaks found?

YES : When there is a leak from the attachment points of the fuel pump assembly, fuel tank differential pressure sensor, leveling valve or fuel tank rollover valve, reassemble the leaked parts and check again that there are no leaks. Then reinstall the fuel tank. Go to Step 21 .

YES : When there is a leak from the fuel tank, replace the fuel tank. Refer to GROUP 13B, Fuel Tank P.13B-13. Go to Step 21.

NO : When there is no leak, reinstall the fuel tank, refer to GROUP 13B, Fuel Tank P.13B-13. Go to Step 14.

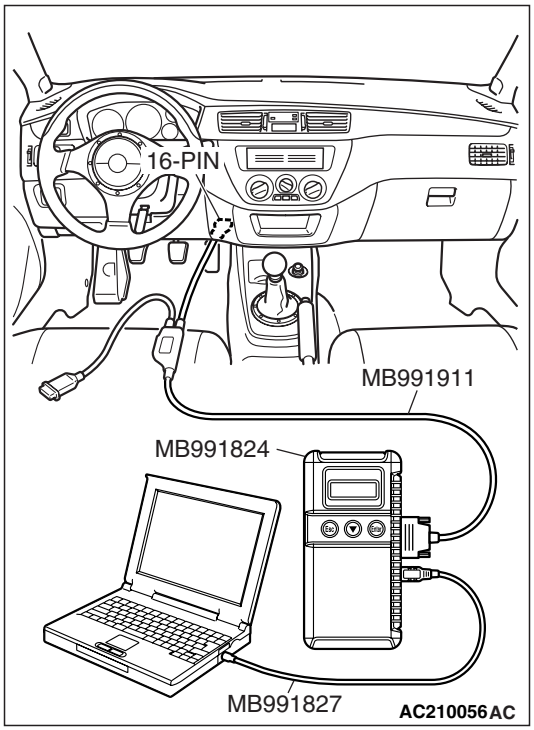

STEP 14. Using scan tool MB991958, check the evaporative emission system monitor test.

⚠ CAUTION

- **To prevent damage to scan tool MB991958, always turn the ignition switch to the "LOCK" (OFF) position before connecting or disconnecting scan tool MB991958.**
- **During this test, the ECM automatically increases the engine speed to 1,600 r/min or greater. Check that the transaxle is set to the neutral position.**

(1) Connect scan tool MB991958 to the data link connector.
(2) Turn the ignition switch to the "ON" position.
(3) Erase the DTCs using scan tool MB991958.
(4) Check that the fuel cap is securely closed. (Tighten until three clicks are heard.)
(5) Start the engine.
(6) Select "System Test."
(7) Select "Evap Leak Mon."
(8) During the test, keep the accelerator pedal at the idle position.
(9) Keep the engine speed and engine load within the specified range. When the monitor test starts, the "In Progress" item on scan tool MB991958 will change from "NO" to "YES."
(10) Turn the ignition switch to the "LOCK" (OFF) position. Disconnect scan tool MB991958.

Q: Is "Evap Leak Mon. Completed. Test Failed and DTCs Set" displayed on scan tool MB991958?

YES : Replace the ECM. Go to Step 21.

NO : If "Evap Leak Mon. Completed. Test Passed" is displayed on scan tool MB991958, the evaporative emission system is working properly at this time. Go to Step 21.

NO : If "Evap Leak Mon. Discontinued. Retest again from the first" is displayed on scan tool MB991958, the EVAP monitor has been interrupted during the test. Turn the ignition switch to the "LOCK" (OFF) position once, and repeat the monitoring from Step 14.

STEP 15. Pressure test for clogging in evaporator line from hoses I to O.

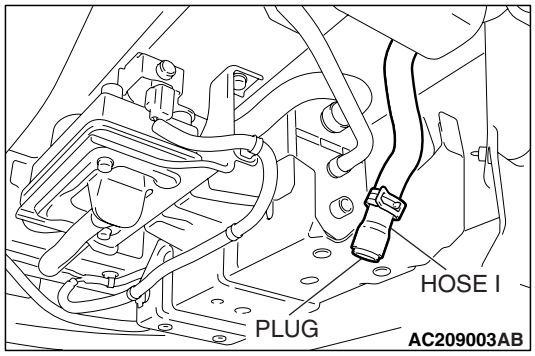

(1) Disconnect hose I from the canister side, and plug the hose.
(2) Remove the fuel cap.

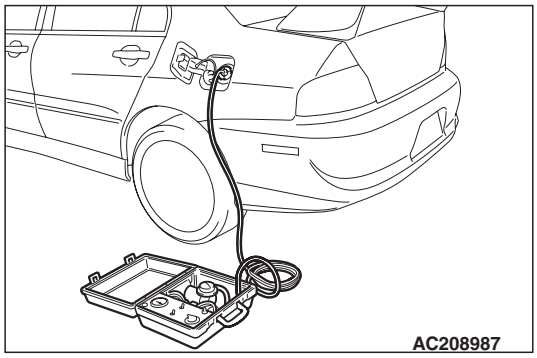

(3) Connect the evaporative emission system pressure pump (Miller number 6872A) to the fuel tank filler tube and apply pressure.

NOTE: "Pressure test" in this procedure refers to the I/M240 Simulation Test (8 simple steps) described in the evaporative emission system pressure pump (Miller number 6872A) manufacture's instructions located in the lid of the pump box.

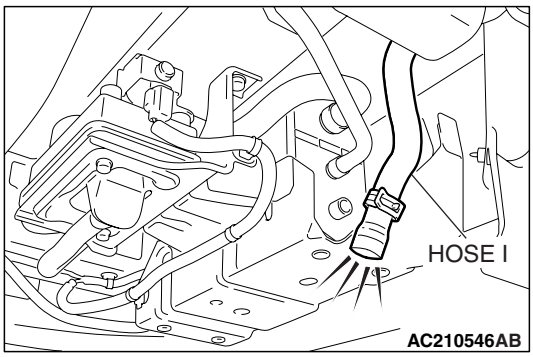

(4) After it is confirmed that pressure maintained, unplug hose I.
(5) Disconnect the evaporative emission system pressure pump, and reinstall the fuel cap.
(6) Connect hose I to the evaporative emission canister.

Q: Is air blown from hose I?

YES : Go to Step 20.
NO : Go to Step 16.

STEP 16. Check for clogging in the evaporator line hoses I, K,L and M.

(1) Remove the fuel tank filler tube protector (Refer to GROUP 13B, Fuel Tank P.13B-13).

(2) The clogging test with a hand vacuum pump on each hose from hoses I,K,L and M.

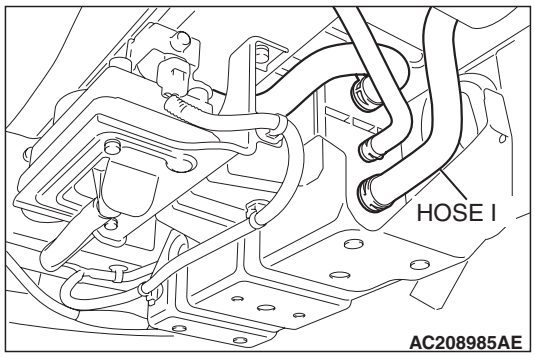

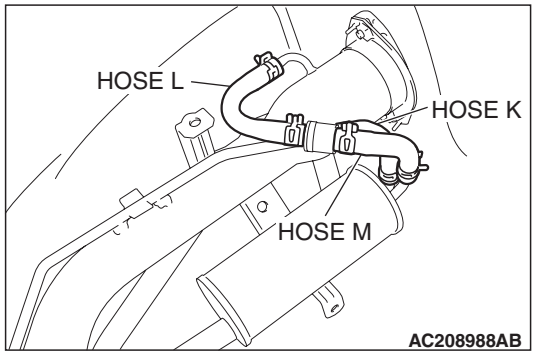

Q: Are the hoses in good condition?

YES : Go to Step 17.

NO : Replace the damaged hose, and the fuel tank filler tube protector. Refer to GROUP 13B, Fuel Tank P.13B-13. Go to Step 21.

STEP 17. Test check valve B.

(1) Check valve B is a one-way check valve.

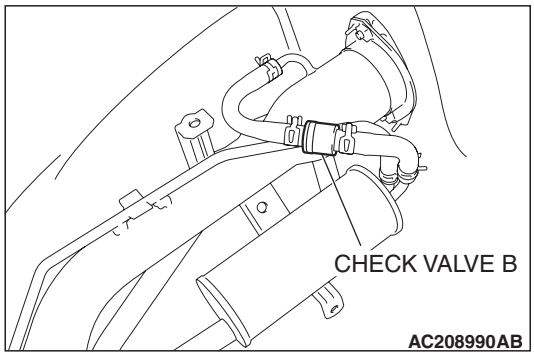

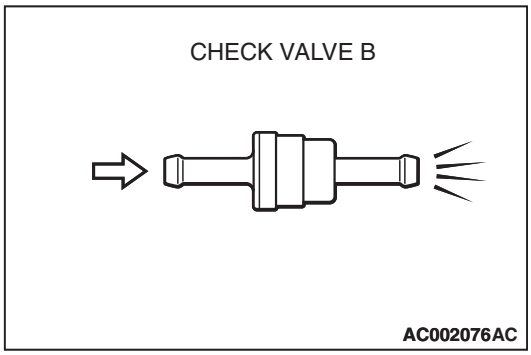

(2) Check valve B should allow air to flow in only one direction.

Q: Does check valve B allow air to pass in one direction only?

YES : Go to Step 18.

NO : Replace check valve B, and reinstall the fuel tank filler tube protector. Refer to GROUP 13B, Fuel Tank P.13B-13. Go to Step 21.

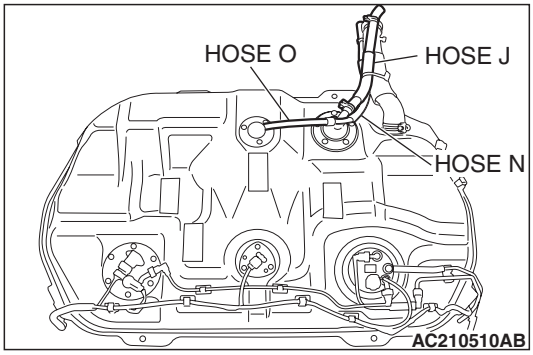

STEP 18. Check for clogging in the evaporator line from hoses J,N and O.

Remove the fuel tank (Refer to GROUP 13B, Fuel Tank P.13B-13).

Q: Are the hoses in good condition?

YES : Go to Step 19.

NO : Replace the damaged hose, and reinstall the fuel tank. Refer to GROUP 13B, Fuel Tank P.13B-13. Go to Step 21.

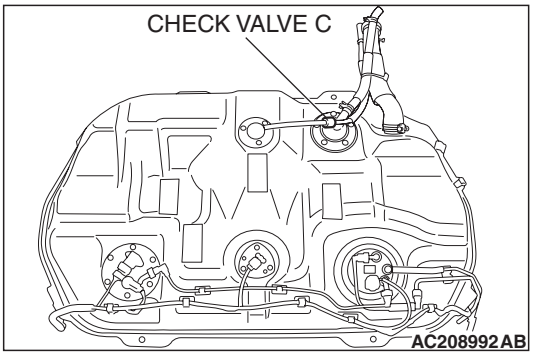

STEP 19. Test check valve C.

(1) Check valve C is a one-way check valve.

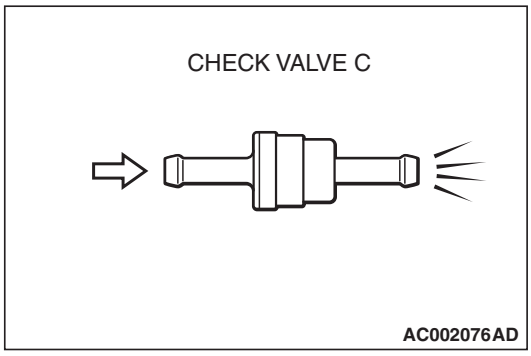

(2) Check valve C should allow air to flow in only one direction.

Q: Does check valve C allow air to pass in one direction only?

YES : Go to Step 21.

NO : Replace check valve C, reinstall the fuel tank and the fuel tank filler tube protector. Refer to GROUP 13B, Fuel Tank P.13B-13. Go to Step 21.

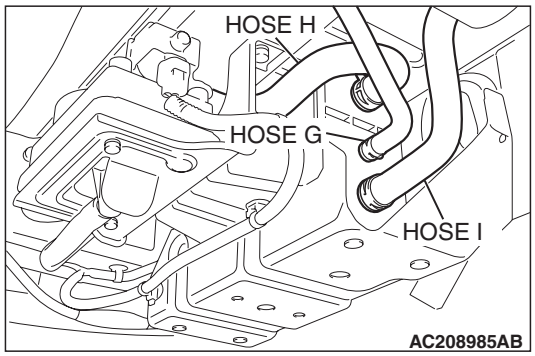

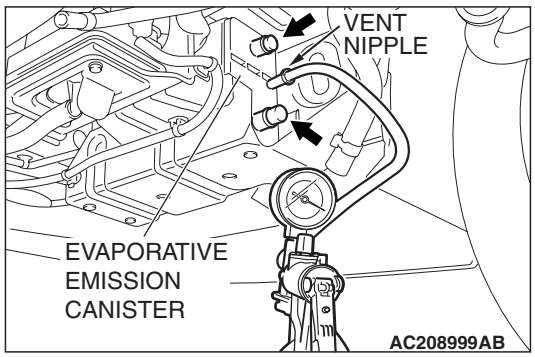

STEP 20. Check the evaporative emission canister for leaks and clogging.

(1) Disconnect hoses G, H and I from the canister side, and connect a hand vacuum pump to the canister instead of hose G, and plug the other nipples.
(2) Apply a pressure on the hand vacuum pump, and confirm that air is maintained.
(3) Disconnect the hand vacuum pump, and connect hoses G, H and I to the canister.

Q: Is the evaporative emission canister in good condition?

YES : Go to Step 14.
NO : Replace the canister. Refer to GROUP 17, Evaporative Emission Canister and Fuel Tank Pressure Relief Valve P.17-21. Go to Step 21.

STEP 21. Perform the OBD-II drive cycle.

(1) Confirm the repair by performing the appropriate drive cycle. Refer to Diagnostic Function –OBD-II Drive Cycle – Pattern 5 P.13A-12.
(2) Read the diagnostic trouble code (DTC).

Q: Is DTC P0455 set?

YES : Return to Step 1.
NO : The procedure is complete.

DTC P0456: Evaporative Emission System Leak Detected (Very Small Leak)

SYSTEM DIAGRAM

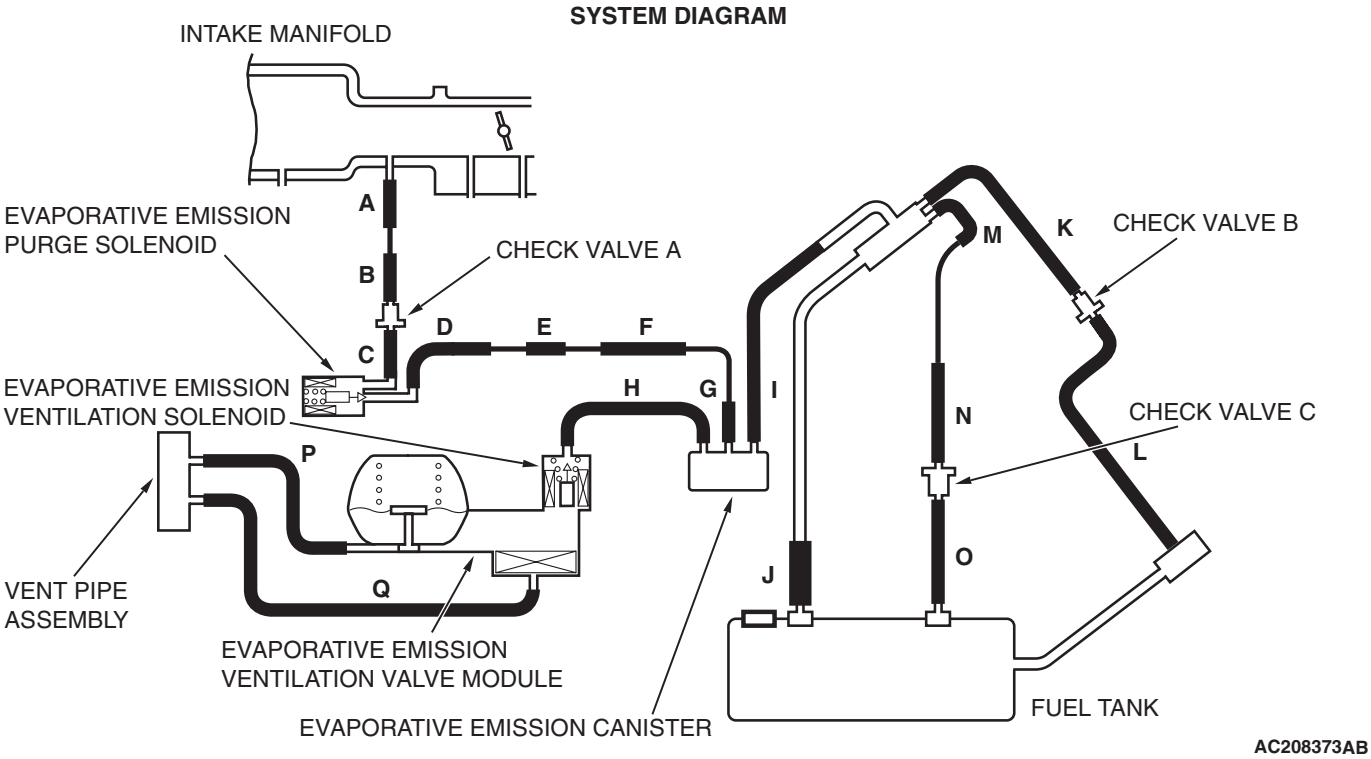

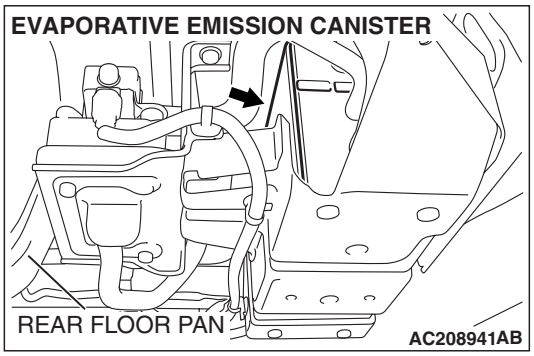

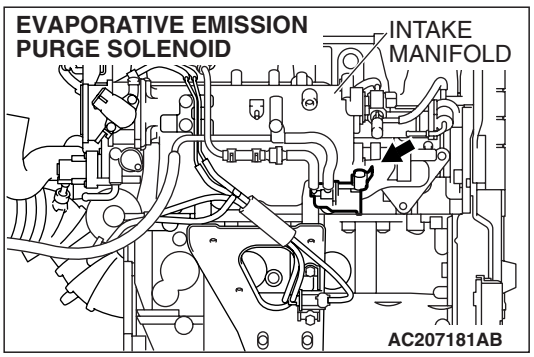

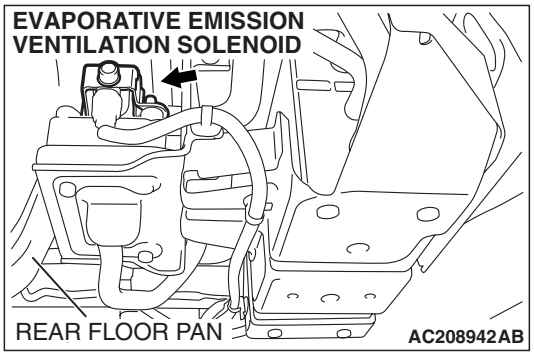

TECHNICAL DESCRIPTION

- The ECM monitors the Evaporative Emission (EVAP) System pressure.
- The evaporative emission purge solenoid is opened to allow manifold vacuum to create low pressure (vacuum) in the EVAP system.
- The ECM controls the evaporative emission ventilation solenoid. It closes the evaporative emission ventilation solenoid to seal the evaporative emission canister side of the system.

- When the EVAP system develops a vacuum of 2 kPa (0.29 psi), the evaporative emission purge solenoid is closed and the fuel system vacuum is maintained at 2 kPa (0.29 psi).
- The ECM determines whether there is a leak in the EVAP system by monitoring the vacuum inside the fuel tank.
- The test is stopped when fuel vapor pressure exceeds predetermined limits.

DESCRIPTIONS OF MONITOR METHODS

- Measure reverting pressure after depressurizing by intake manifold negative pressure and detect malfunction if reverting pressure rises largely.

MONITOR EXECUTION

- Once per driving cycle.

MONITOR EXECUTION CONDITIONS (OTHER MONITOR AND SENSOR)

Other Monitor (There is no temporary DTC stored in memory for the item monitored below)

- Evaporative emission purge solenoid monitor
- Evaporative emission purge system monitor
- Fuel tank differential pressure sensor monitor
- Evaporative emission ventilation solenoid monitor
- Fuel level sensor monitor
- Fuel temperature sensor monitor

Sensor (The sensors below are determined to be normal)

- Volume airflow sensor
- Barometric pressure sensor
- Intake air temperature sensor
- Engine coolant temperature sensor

LOGIC FLOW CHARTS (Monitor Sequence)

0.04in, 0.02in GROSS LEAK MONITOR

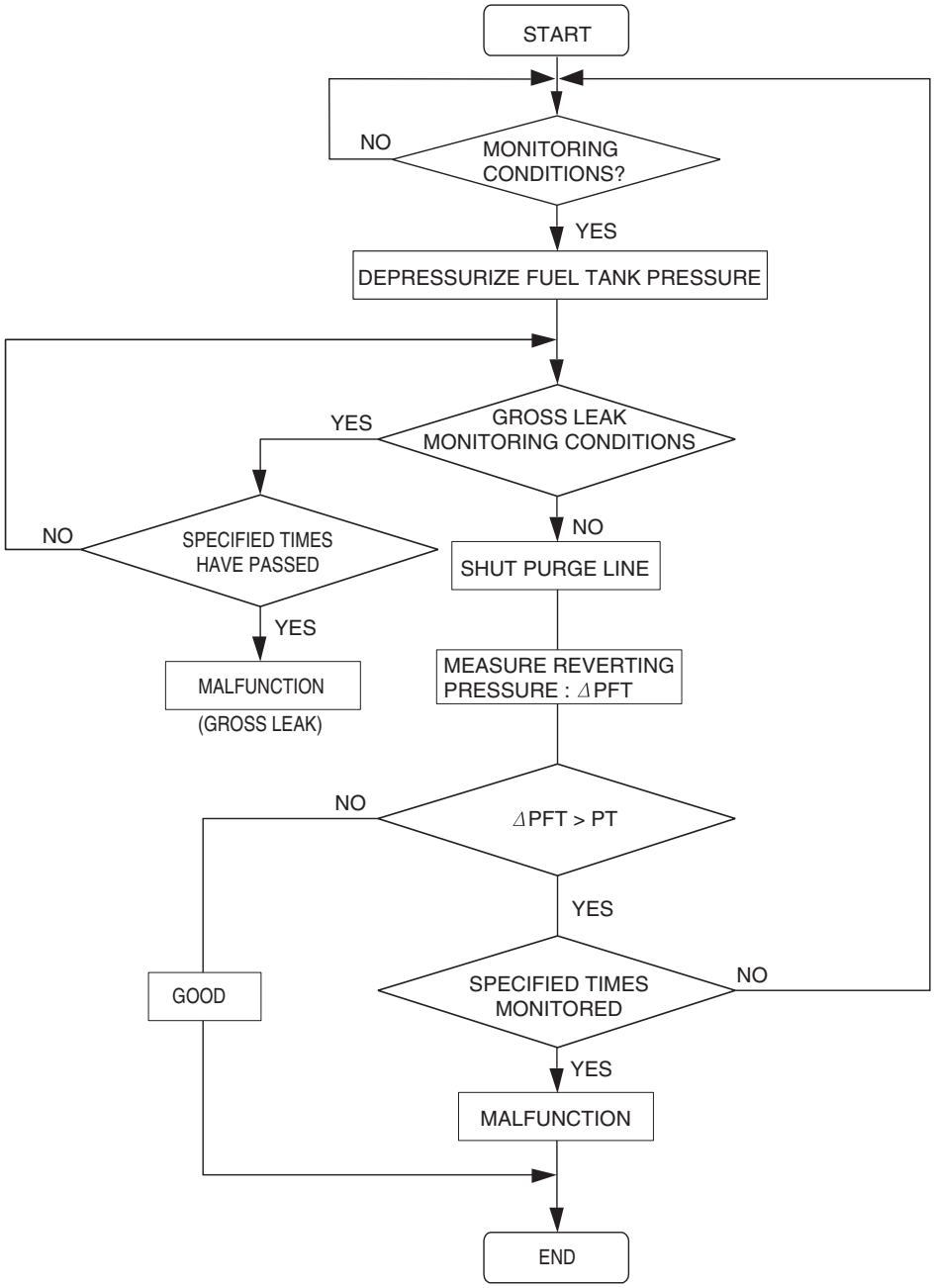

AC306649

DTC SET CONDITIONS

Check Conditions A: At Start up

- Intake air temperature is 36° C (97° F) or less when the engine is started.
- The engine coolant temperature 36° C (97° F) or less when the engine is started.
- Fuel level sensor output voltage is 2.4 – 3.7 volts when the engine is started, and the amount of remaining fuel is 40 – 85 percent of capacity.

Check Conditions B: For Test to Run

- Barometric pressure is greater than 76 kPa (11 psi).
- The fuel temperature is 33° C (91° F) or less.
- Fuel tank differential pressure sensor output voltage is 1 to 4 volts.

Check Conditions C: For Test to Stop

- Intake air temperature is greater than –10° C (14° F).
- When the evaporative emission purge solenoid and evaporative emission ventilation solenoid are closed, the pressure rises in the fuel tank is less than 324 Pa (0.047 psi).
- Engine coolant temperature is greater than 20° C (68° F).
- 10 seconds have elapsed from the start of the previous monitoring.
- Monitoring time: 10 – 14 minutes.

Judgement Criteria

- Internal pressure of the fuel tank has changed greater than 1,177 – 1,373 Pa (0.177 – 0.199 psi) in 128 seconds after the tank and vapor line were closed.
- ECM monitors for this condition once during drive cycle.

OBD-II DRIVE CYCLE PATTERN

Refer to Diagnostic Function –OBD-II Drive Cycle – Pattern 6 P.13A-12.

TROUBLESHOOTING HINTS (THE MOST LIKELY CAUSES FOR THIS CODE TO BE SET ARE:)

- Loose fuel cap.
- Fuel cap relief pressure is incorrect.
- Malfunction of the evaporative emission canister seal.
- Malfunction of the fuel tank, purge line or vapor line seal.
- Malfunction of the evaporative emission ventilation solenoid.

DIAGNOSIS

Required Special Tools:

- MB991958: Scan Tool (M.U.T.-III Sub Assembly)
  - MB991824: V.C.I.
  - MB991827: USB Cable
  - MB991911: Main Harness B

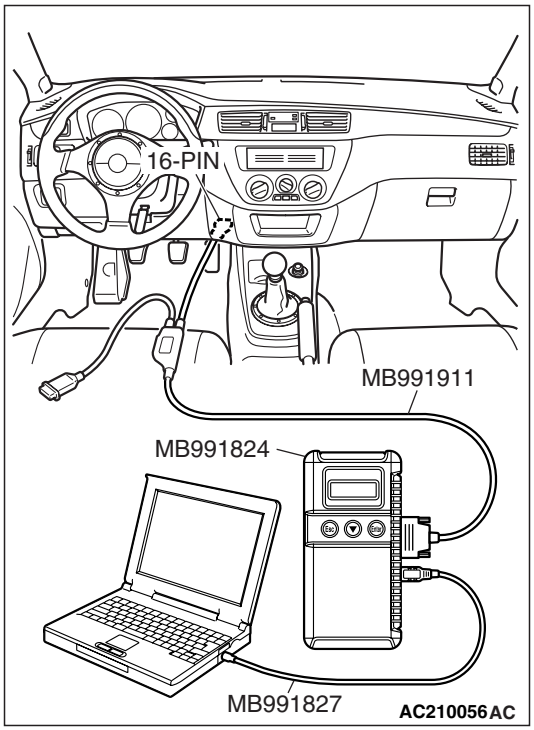

STEP 1. Using scan tool MB991958, check the evaporative emission system monitor test.

⚠ CAUTION

- **To prevent damage to scan tool MB991958, always turn the ignition switch to the "LOCK" (OFF) position before connecting or disconnecting scan tool MB991958.**
- **During this test, the ECM will automatically increase the engine speed to 1,600 r/min or greater. Check that the transaxle is set to the neutral position.**

(1) Connect scan tool MB991958 to the data link connector.
(2) Turn the ignition switch to the "ON" position.
(3) Erase the DTCs using scan tool MB991958.
(4) Check that the fuel cap is securely closed. (Tighten until three clicks are heard.)
(5) Start the engine.
(6) Select "System Test."
(7) Select "Evap Leak Mon."
(8) During this test, keep the accelerator pedal at the idle position.
(9) Keep the engine speed and engine load within the specified range. When the monitor test starts, the "In Progress" item on scan tool MB991958 will change from "NO" to "YES."
(10) Turn the ignition switch to the "LOCK" (OFF) position, and disconnect scan tool MB991958.

Q: Is "Evap Leak Mon. Completed. Test Failed and DTCs Set" displayed on scan tool MB991958?

YES : A malfunction has been detected during the monitor test. Refer to the Diagnostic Trouble Code Chart and diagnose any other DTCs that are set P.13A-41. If no other DTCs have been set, go to Step 2.

NO : If "Evap Leak Mon. Completed. Test Passed" is displayed on scan tool MB991958, the evaporative emission system is working properly at this time. Explain to the customer that an improperly tightened fuel cap can cause the MIL to turn on. Return the vehicle to the customer.

NO : If "Evap Leak Mon. Discontinued. Retest again from the first" is displayed on scan tool MB991958, the EVAP monitor has been interrupted during the test. Turn the ignition switch to the "LOCK" (OFF) position once, and repeat the monitoring from Step 1.

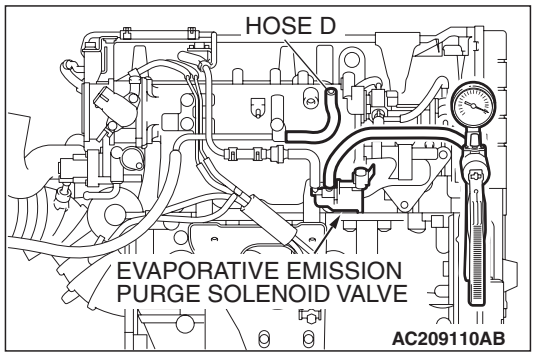

STEP 2. Check the evaporative emission purge solenoid for leaks.

(1) Disconnect hose D from the evaporative emission purge solenoid and connect a hand vacuum pump to the nipple of the evaporative emission purge solenoid.
(2) Use the hand vacuum pump to confirm that the evaporative emission purge solenoid holds vacuum.
(3) Disconnect the hand vacuum pump, and connect hose D to the evaporative emission purge solenoid.

Q: Does the evaporative emission purge solenoid hold vacuum?

YES : Go to Step 3.
NO : Replace the evaporative emission purge solenoid. Go to Step 16.

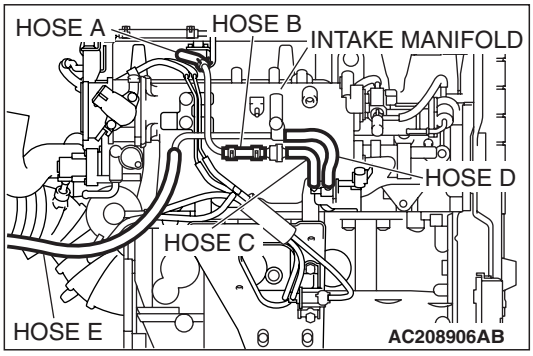

STEP 3. Check for leaks in evaporative emission system hoses A through E.

Use a hand vacuum pump to test each hose from hose A to hose E.

Q: Are the hoses in good condition?

YES : Go to Step 4.
NO : Replace any damaged hose. Go to Step 16.

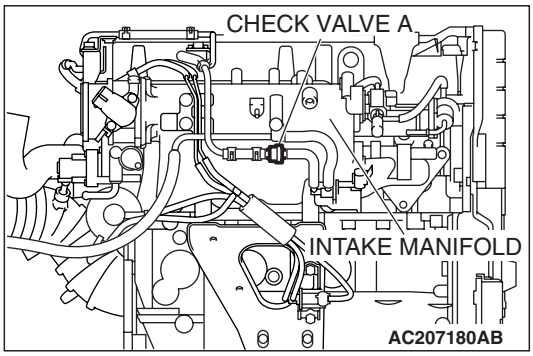

STEP 4. Test check valve A.

(1) Check valve A is a one-way check valve.

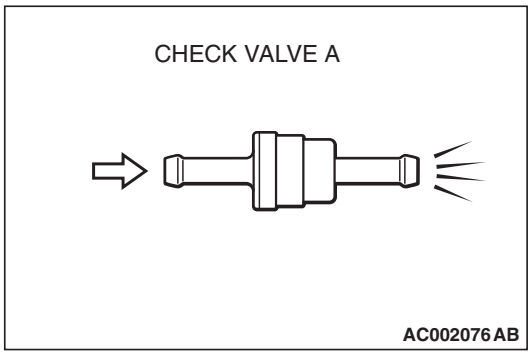

(2) Check valve A should allow air to flow in only one direction.

Q: Does check valve A allow air to pass in one direction only?

YES : Go to Step 5.
NO : Replace check valve A. Go to Step 16.

STEP 5. Check the evaporative emission ventilation solenoid and hose H using scan tool MB991958.

⚠ CAUTION

To prevent damage to scan tool MB991958, always turn the ignition switch to the "LOCK" (OFF) position before connecting or disconnecting scan tool MB991958.

(1) Connect scan tool MB991958 to the data link connector.

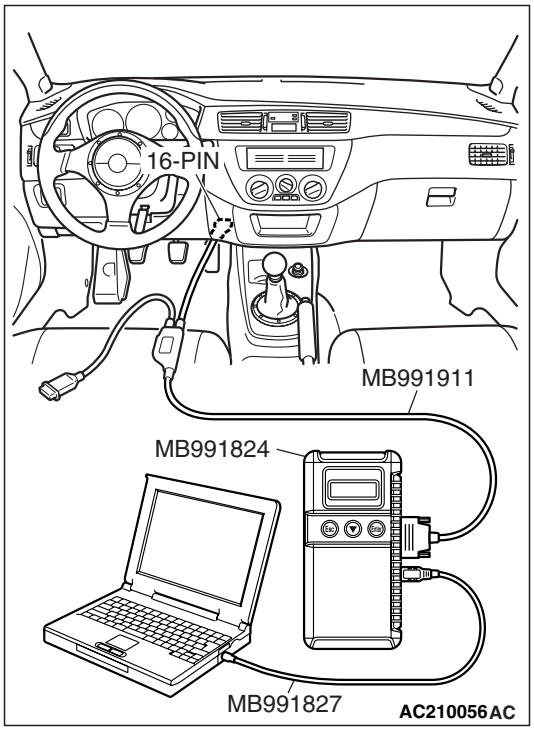

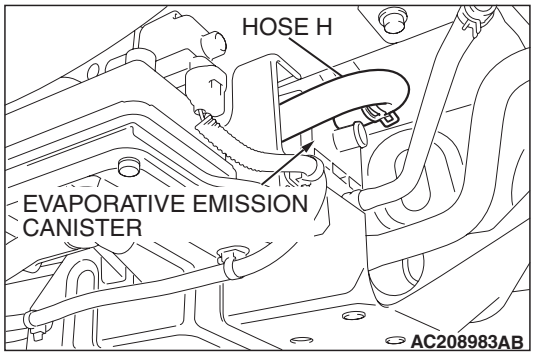

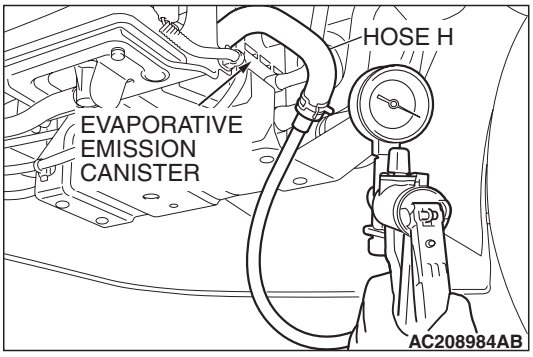

(2) Disconnect hose H from the evaporative emission canister side, and connect a hand vacuum pump.
(3) Turn the ignition switch to the "ON" position.
(4) Set scan tool MB991958 to actuator test mode for item 29: Evaporative Emission Ventilation Solenoid. While the evaporative emission ventilation solenoid is energized, operate the hand vacuum pump and confirm that the solenoid holds vacuum.
(5) Turn the ignition switch to the "LOCK" (OFF) position, and disconnect scan tool MB991958.
(6) Disconnect the hand vacuum pump, and connect hose H to the evaporative emission canister.

Q: Did the evaporative emission ventilation solenoid hold vacuum?

YES : Go to Step 7.
NO : Go to Step 6.

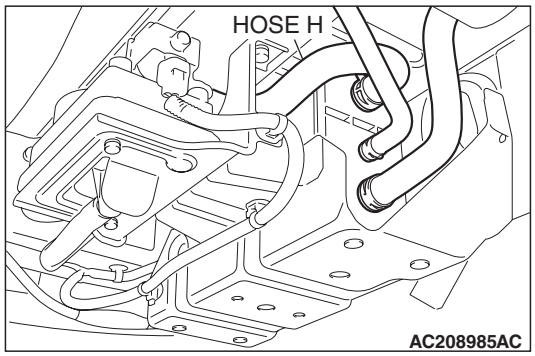

STEP 6. Check for leaks in evaporative emission system hose H.

Use a hand vacuum pump to test each hose from hose H.

Q: Are the hoses in good condition?

YES : Replace the evaporative emission ventilation solenoid. Go to Step 16.

NO : Replace hose H. Go to Step 16.

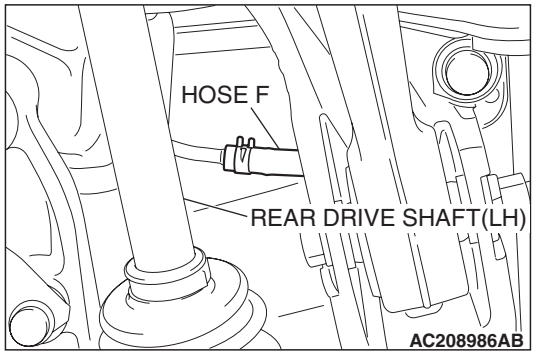

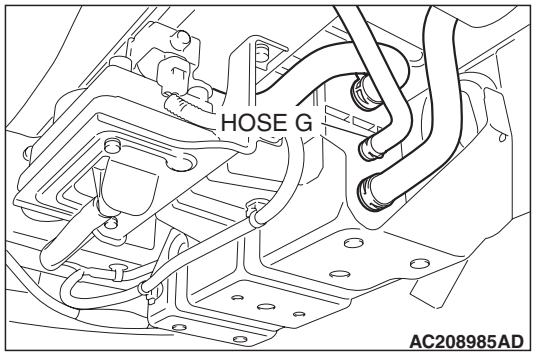

STEP 7. Check for leaks in evaporative emission system hoses F and G.

Use a hand vacuum pump to test each hose from hose F to hose G.

Q: Are the hoses in good condition?

YES : Go to Step 8.

NO : Replace the damaged hose. Go to Step 16.

STEP 8. Pressure test the evaporative emission system lines between hoses I and O through the fuel tank.

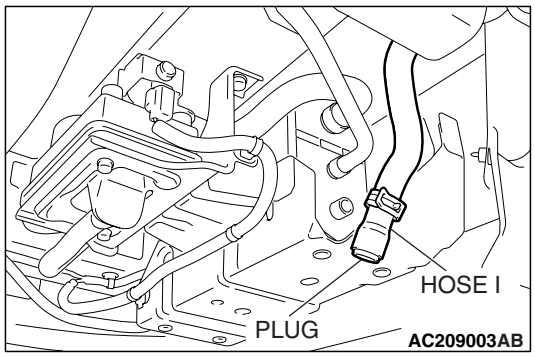

(1) Disconnect hose I from the canister, and plug hose I securely.
(2) Confirm that the evaporative emission system pressure pump (Miller number 6872A) is operating properly. Perform the self-test as described in the manufacturer's instructions.

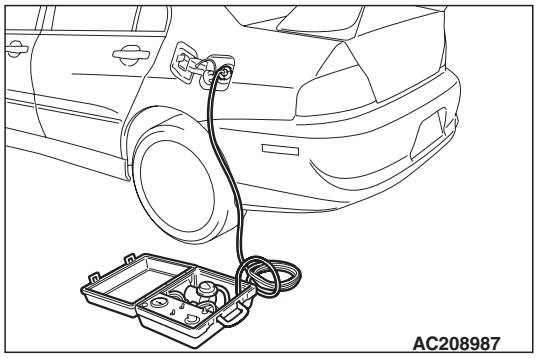

(3) Connect the evaporative emission system pressure pump to the fuel tank filler tube.
(4) Pressure test the system to determine whether any leaks are present.

NOTE: The "Pressure test" in this procedure refers to the I/M240 Simulation Test. The eight steps of this test are described in the manufacturer's instructions for the evaporative emission system pressure pump, Miller number 6872A.

(5) Disconnect the evaporative emission system pressure pump, and reinstall the fuel cap.
(6) Connect hose I to the canister.

Q: Is the evaporative emission system line free of leaks?

YES : Go to Step 15.
NO : Go to Step 9.

STEP 9. Check for leaks in evaporative emission system hoses I, K, L and M.

(1) Remove the fuel tank filler tube protector (Refer to GROUP 13B, Fuel Tank P.13B-13).

(2) Perform a leakage test with a hand vacuum pump on each hose I, K, L and M.

Q: Do the hoses hold vacuum?

YES : Go to Step 10.

NO : Replace any damaged hose, and reinstall the fuel tank filler tube protector. Refer to GROUP 13B, Fuel Tank P.13B-13. Go to Step 16.

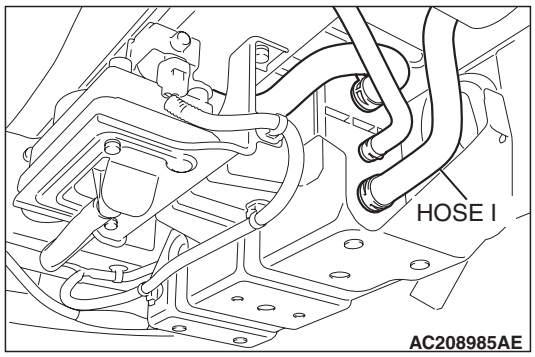

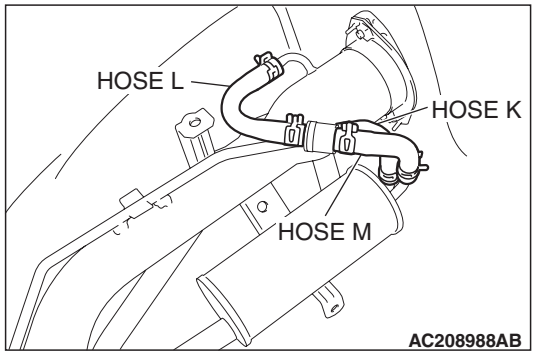

STEP 10. Test check valve B.

(1) Check valve B is a one-way check valve.

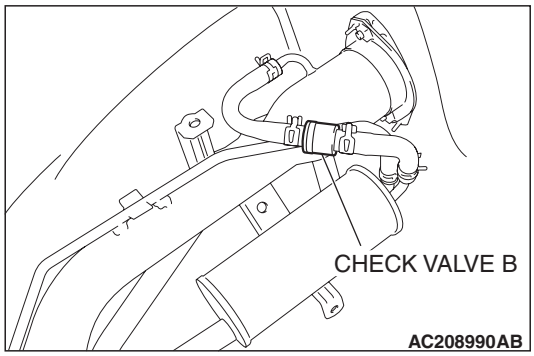

(2) Check valve B should allow air to flow in only one direction.

Q: Does check valve B allow air to pass in one direction only?

YES : Go to Step 11.

NO : Replace check valve B, and reinstall the fuel tank filler tube protector. Refer to GROUP 13B, Fuel Tank P.13B-13. Go to Step 16.

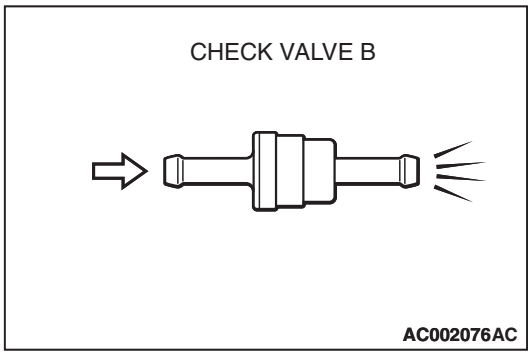

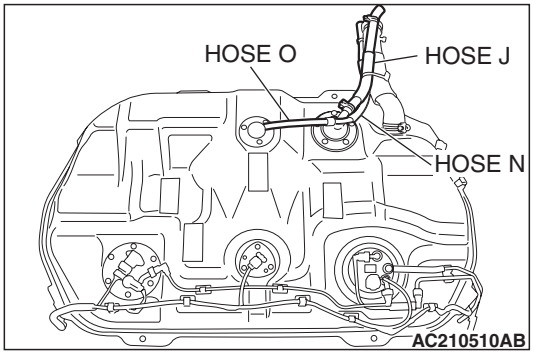

STEP 11. Check for leaks in evaporative emission system hoses J, N and O.

(1) Remove the fuel tank (Refer to GROUP 13B, Fuel Tank P.13B-13).

(2) Perform a leakage test with a hand vacuum pump on each hose J, N and O.

Q: Do the hoses hold vacuum?

YES : Go to Step 12.

NO : Replace any damaged hose, and reinstall the fuel tank. Refer to GROUP 13B, Fuel Tank P.13B-13. Go to Step 16.

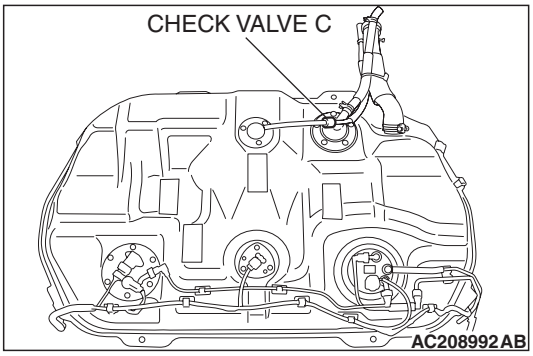

STEP 12. Test check valve C.

(1) Check valve C is a one-way check valve.

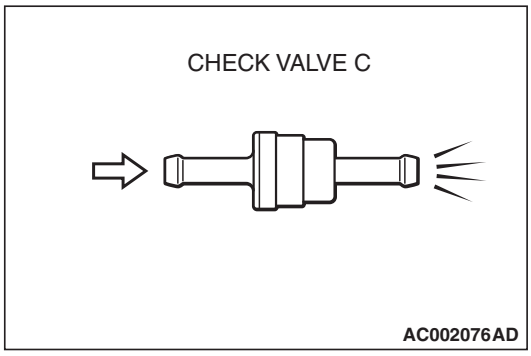

(2) Check valve C should allow air to flow in only one direction.

Q: Does check valve C allow air to pass in one direction only?

YES : Go to Step 13.

NO : Replace check valve C, and reinstall the fuel tank and the fuel tank filler tube protector. Refer to GROUP 13B, Fuel Tank P.13B-13. Go to Step 16.

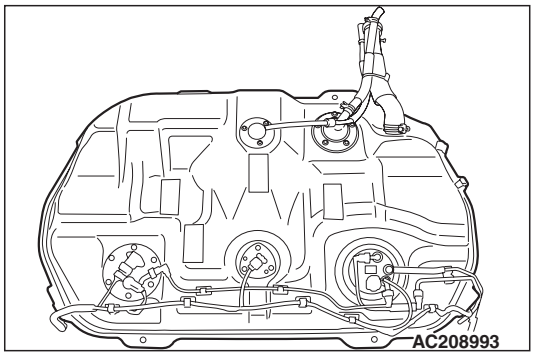

STEP 13. Check for leaks in the fuel tank.

(1) Visually check for cracks or other leaks in the fuel tank.

NOTE: Carefully check the fuel pump assembly and the differential pressure sensor installation in the fuel tank.

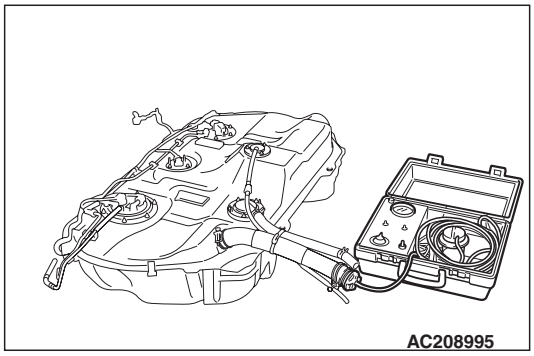

(2) Connect an evaporative emission system pressure pump (Miller number 6872A) to the filler hose.

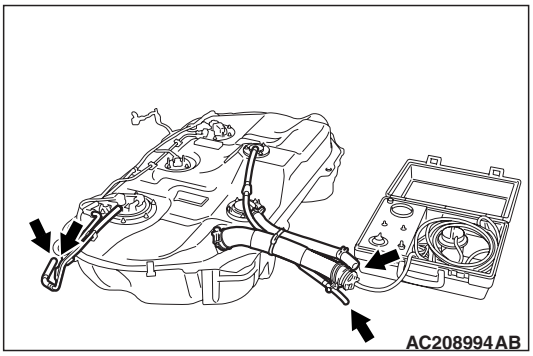

(3) Plug the hose shown in the illustration.

NOTE: If these items are not securely plugged here, the fuel could leak in the next step.

(4) Pressurize the fuel tank with the evaporative emission system pressure pump.

(5) In the pressurized state, check for leaks by applying a soapy water solution to each section and look for bubbles.

Q: Are any leaks found?

YES : When there is a leak from the attachment points of the fuel pump assembly, fuel tank differential pressure sensor, leveling valve or fuel tank rollover valve, reassemble the leaked parts and check again that there are no leaks. Then reinstall the fuel tank. Go to Step 16 .

YES : When there is a leak from the fuel tank, replace the fuel tank. Refer to GROUP 13B, Fuel Tank P.13B-13. Go to Step 16.

NO : When there is no leak, reinstall the fuel tank, refer to GROUP 13B, Fuel Tank P.13B-13. Go to Step 14.

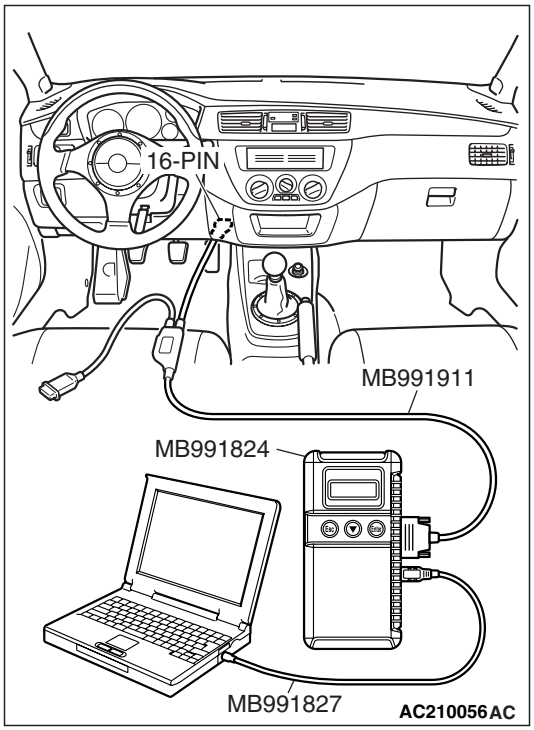

STEP 14. Using scan tool MB991958, check the evaporative emission system monitor test.

⚠ CAUTION

- **To prevent damage to scan tool MB991958, always turn the ignition switch to the "LOCK" (OFF) position before connecting or disconnecting scan tool MB991958.**
- **During this test, the ECM automatically increases the engine speed to 1,600 r/min or greater. Check that the transaxle is set to the neutral position.**

(1) Connect scan tool MB991958 to the data link connector.
(2) Turn the ignition switch to the "ON" position.
(3) Erase the DTCs using scan tool MB991958.
(4) Check that the fuel cap is securely closed. (Tighten until three clicks are heard.)
(5) Start the engine.
(6) Select "System Test."
(7) Select "Evap Leak Mon."
(8) During the test, keep the accelerator pedal at the idle position.
(9) Keep the engine speed and engine load within the specified range. When the monitor test starts, the "In Progress" item on scan tool MB991958 will change from "NO" to "YES."
(10) Turn the ignition switch to the "LOCK" (OFF) position. Disconnect scan tool MB991958.

Q: Is "Evap Leak Mon. Completed. Test Failed and DTCs Set" displayed on scan tool MB991958?

YES : Replace the ECM. Go to Step 16.

NO : If "Evap Leak Mon. Completed. Test Passed" is displayed on scan tool MB991958, the evaporative emission system is working properly at this time. Go to Step 16.

NO : If "Evap Leak Mon. Discontinued. Retest again from the first" is displayed on scan tool MB991958, the EVAP monitor has been interrupted during the test. Turn the ignition switch to the "LOCK" (OFF) position once, and repeat the monitoring from Step 14.

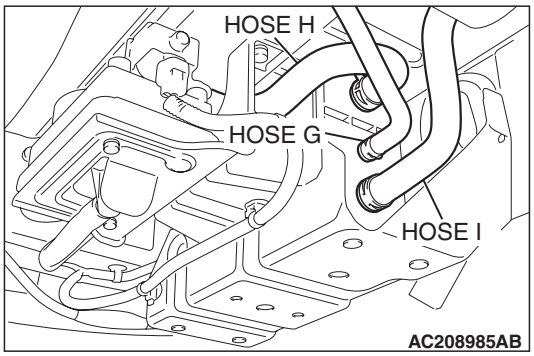

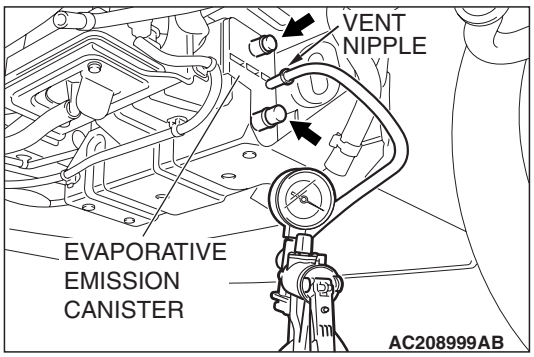

STEP 15. Check for leaks in the evaporative emission canister.

(1) Disconnect hoses G, H and I from the evaporative emission canister side, and connect a hand vacuum pump to the evaporative emission canister instead of hose G, and plug the other nipples.
(2) Apply a pressure on the hand vacuum pump, and confirm that air is maintained.
(3) Disconnect the hand vacuum pump, and connect hoses G, H and I to the canister.

Q: Does the evaporative emission canister hold vacuum?

YES : Go to Step 14.
NO : Replace the evaporative emission canister. Refer to GROUP 17, Evaporative Emission Canister and Fuel Tank Pressure Relief Valve P.17-21. Go to Step 16 .

STEP 16. Perform the OBD-II drive cycle.

(1) Confirm the repair by performing the appropriate drive cycle. Refer to Diagnostic Function –OBD-II Drive Cycle – Pattern 6 P.13A-12.
(2) Read the diagnostic trouble code (DTC).

Q: Is DTC P0456 set?

YES : Return to Step 1.
NO : The procedure is complete.

DTC P0461: Fuel Level Sensor (main) Circuit Range/Performance

Fuel Level Sensor Circuit

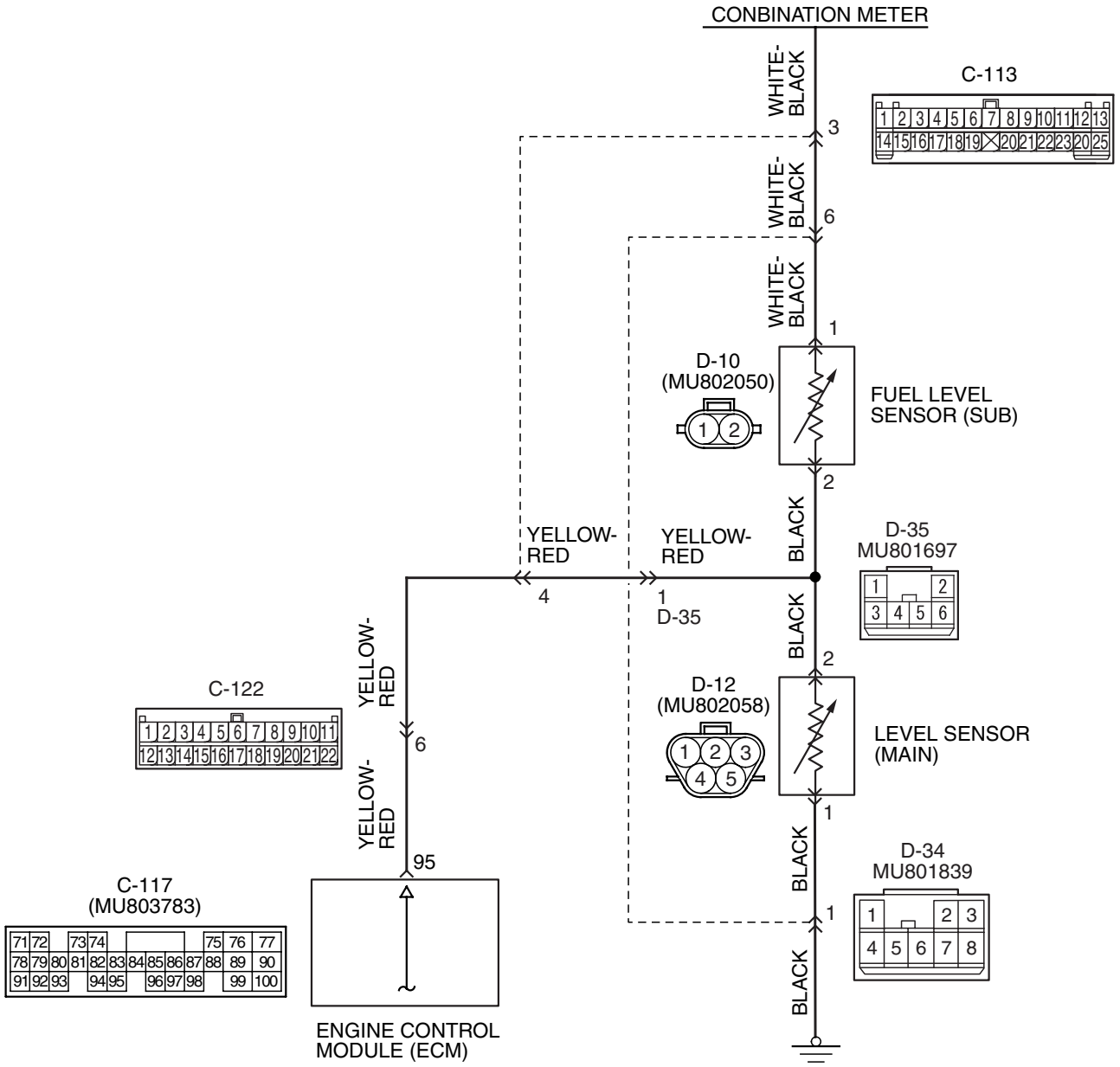

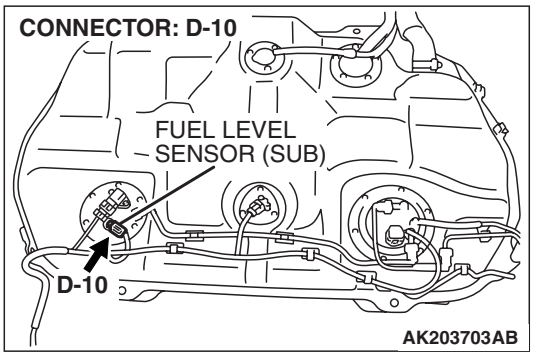

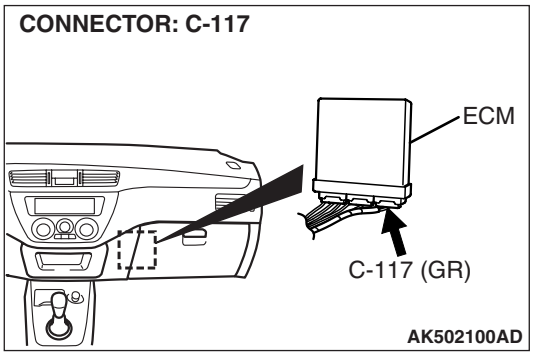

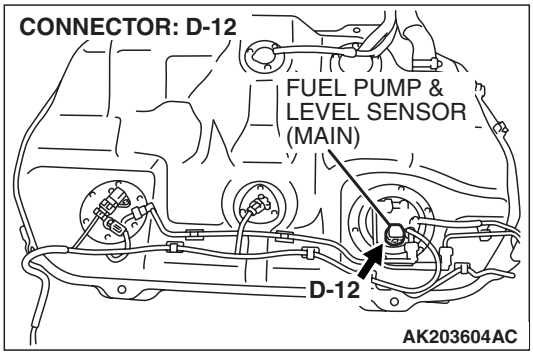

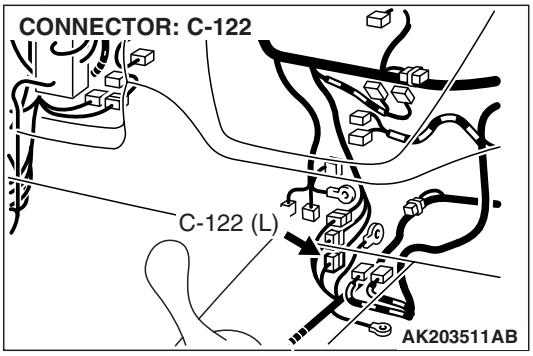

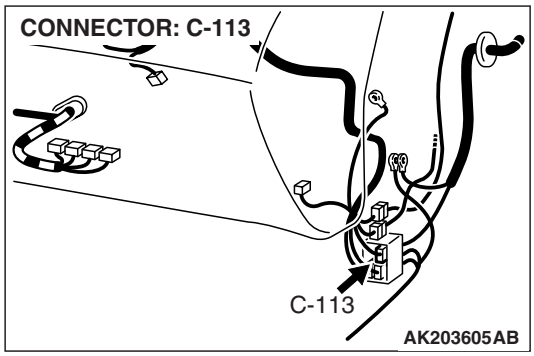

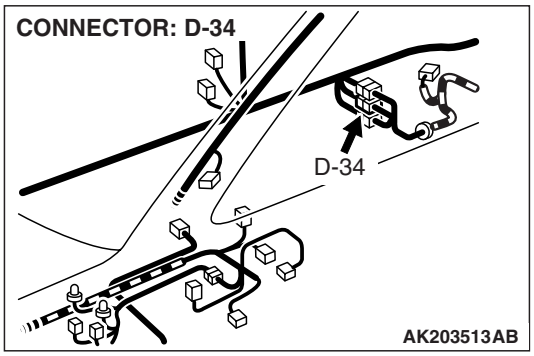

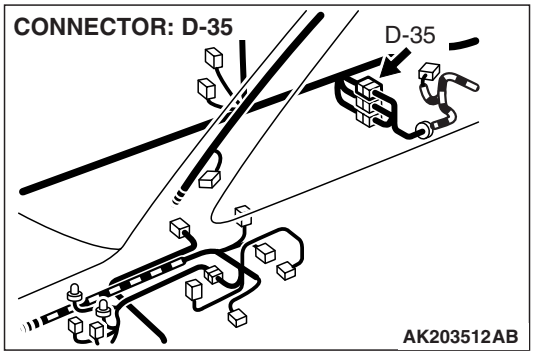

CIRCUIT OPERATION

- The fuel level sensor (main) output voltage is input in ECM (terminal No. 95).

TECHNICAL DESCRIPTION

- Branch the output voltage from the fuel level sensor circuit, and input it into ECM.
- The ECM detects the amount of fuel left in the fuel tank with this voltage, and also controls the fuel level warning light.

DESCRIPTIONS OF MONITOR METHODS

Detect malfunction if change of fuel level sensor output voltage is small when sum of fuel injection is large.

MONITOR EXECUTION

Continuous

MONITOR EXECUTION CONDITIONS (Other monitor and Sensor)

Other Monitor (There is no temporary DTC stored in memory for the item monitored below)

- Not applicable

Sensor (The sensor below is determined to be normal)

- Not applicable

DTC SET CONDITIONS

Logic Flow Chart

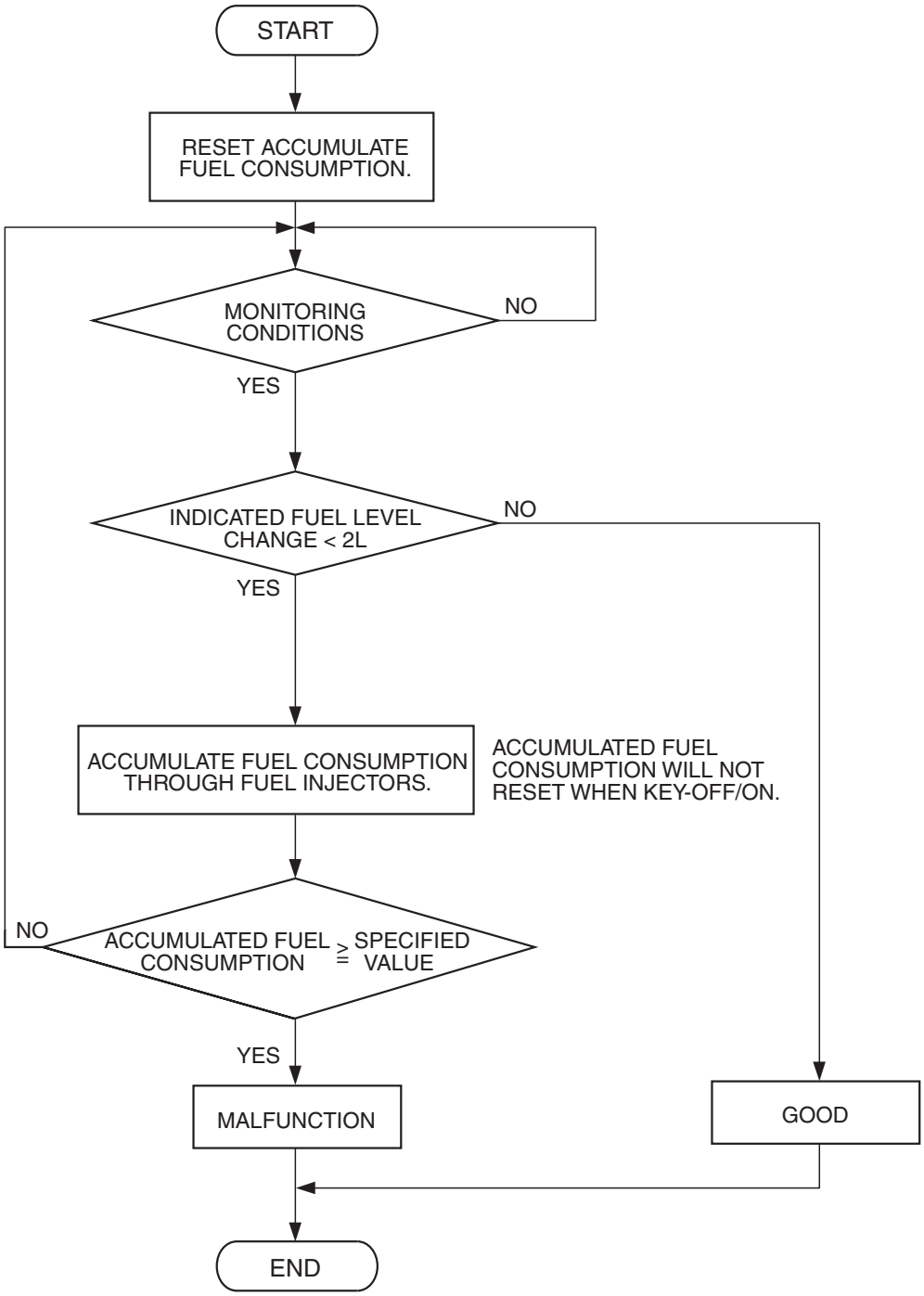

AK305544

Check Condition, Judgement Criterion

- When the fuel consumption calculated from the operation time of the injector amounts to 30 liters (7.9 gal), the diversity of the amount of fuel in tank calculated from the fuel level sensor is 2 liters (0.5 gal) or less.

OBD-II DRIVE CYCLE PATTERN

None.

TROUBLESHOOTING HINTS (The most likely causes for this code to be set are:)

- Fuel level sensor failed.
- Harness damage or connector damage in fuel level sensor circuit.
- ECM failed.

DIAGNOSIS

Required Special Tools:

- MB991958: Scan Tool (M.U.T.-III Sub Assembly)
  - MB991824: V.C.I.
  - MB991827: USB Cable
  - MB991911: Main Harness B

STEP 1. Check fuel gauge.

Q: Is the fuel gauge functioning?

YES : Go to Step 2.

NO : Refer to GROUP 54A, Chassis Electrical – Combination Meters Assembly and Vehicle Speed Sensor –Equipment Diagnosis –Symptom Chart P.54A-48.

STEP 2. Check harness connector C-117 at ECM for damage.

Q: Is the harness connector in good condition?

YES : Go to Step 3.

NO : Repair or replace it. Refer to GROUP 00E, Harness Connector Inspection P.00E-2 Then go to Step 5.

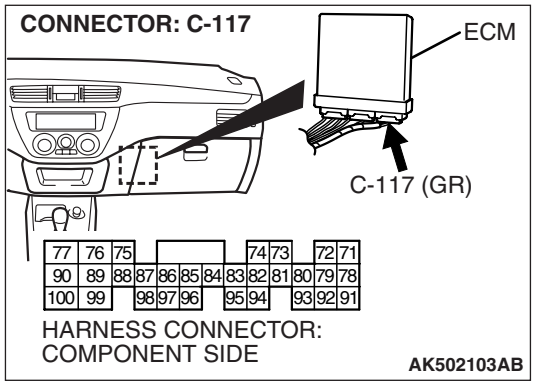

STEP 3. Check for harness damage between ECM connector C-117 (terminal No. 95) and fuel level sensor (main) connector D-12 (terminal No. 2).

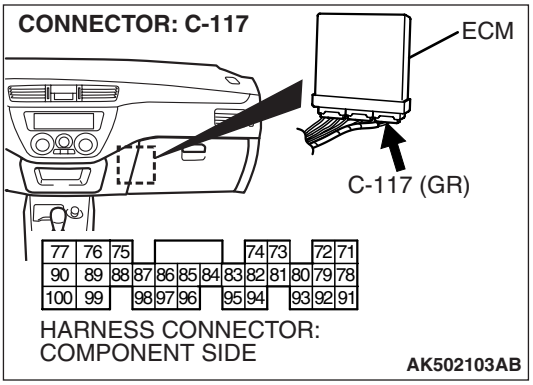

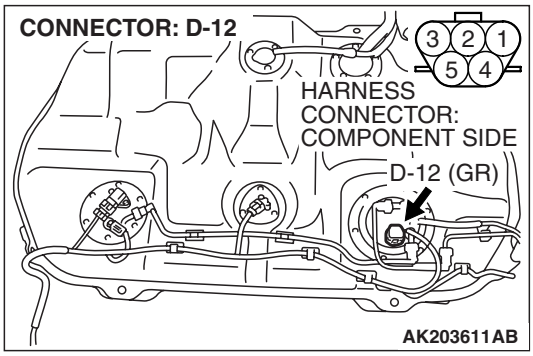

NOTE: Check harness after checking intermediate connectors C-122, C-113 and D-35. If intermediate connectors are damaged, repair or replace them. Refer to GROUP 00E, Harness Connector Inspection P.00E-2. Then go to Step 5.

Q: Is the harness wire in good condition?

YES : Go to Step 4.
NO : Repair it. Then go to Step 5.

STEP 4. Check the trouble symptoms.
Check that the fuel gauge operates correctly.

Q: Does the fuel gauge operate correctly?

YES : It can be assumed that this malfunction is intermittent. Refer to GROUP 00, How to Use Troubleshooting/Inspection Service Points –How to Cope with Intermittent Malfunctions P.00-13.
NO : Replace the ECM. Then go to Step 5.

STEP 5. Check the trouble symptoms.
Check that the fuel gauge operates correctly.

Q: Does the fuel gauge operate correctly?

YES : The inspection is complete.
NO : Retry the troubleshooting.

DTC P0462: Fuel Level Sensor Circuit Low Input

Fuel Level Sensor Circuit

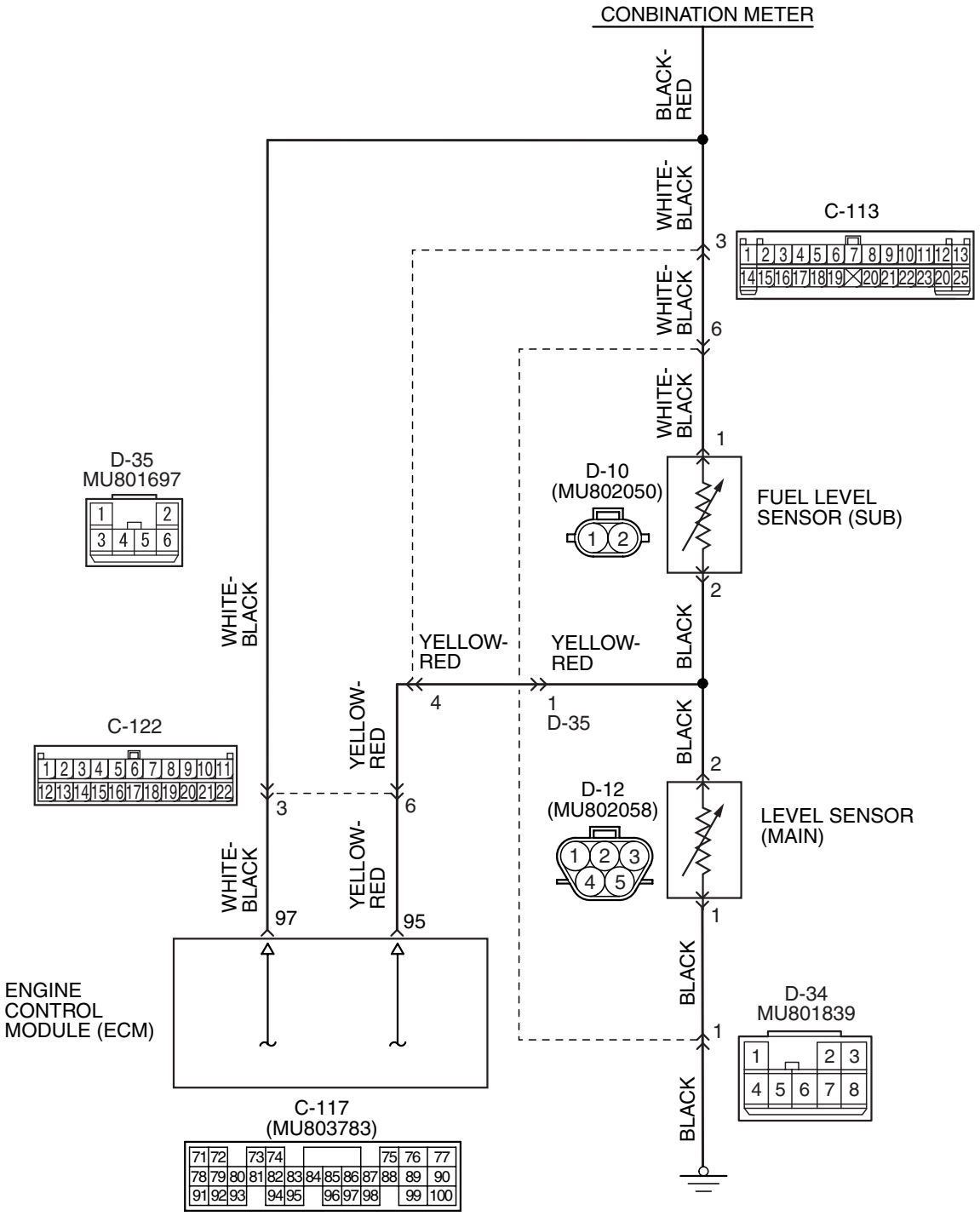

AK502079

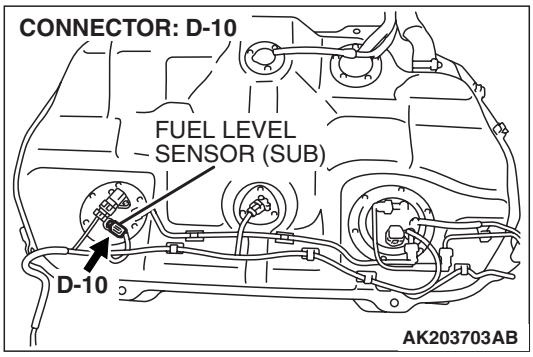

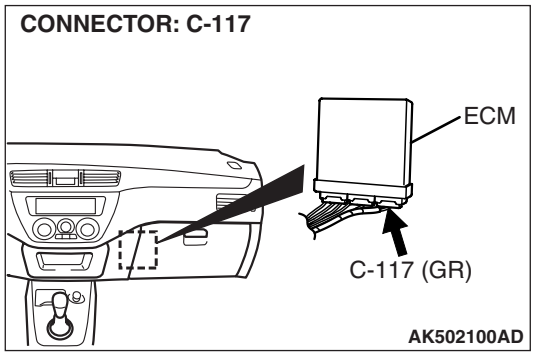

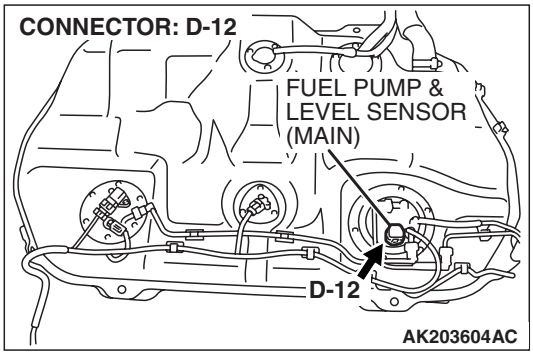

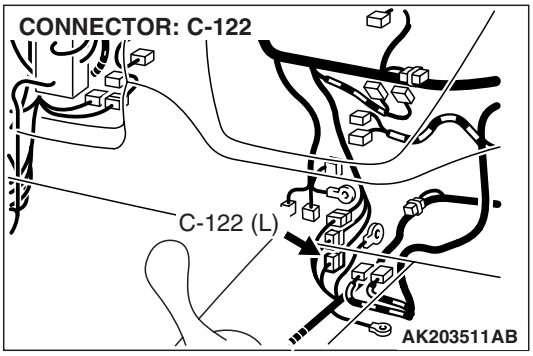

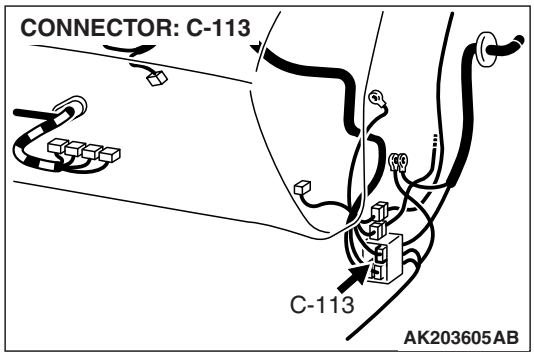

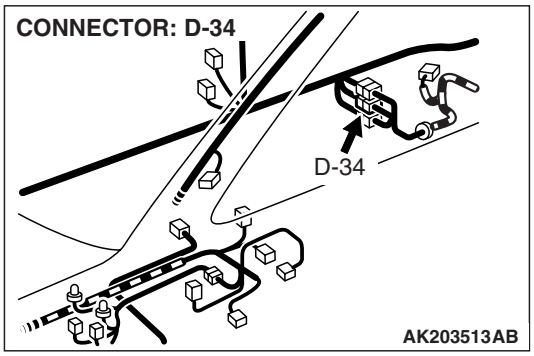

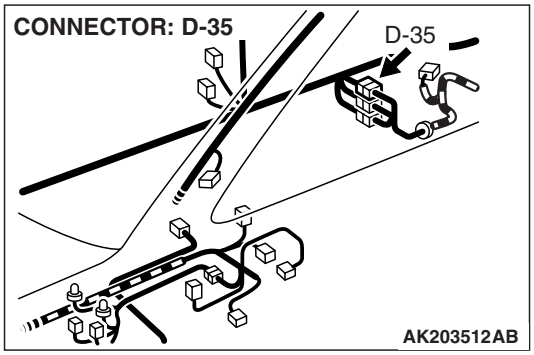

CIRCUIT OPERATION

- The fuel level sensor output voltage is input in ECM (terminal No. 97).

TECHNICAL DESCRIPTION

- Branch the output voltage from the fuel level sensor circuit, and input it into ECM.
- The ECM checks whether this voltage is within a specified range.

DESCRIPTIONS OF MONITOR METHODS

A short circuit is detected while monitoring the fuel level sensor output.

MONITOR EXECUTION

Continuous

TSB Revision

MONITOR EXECUTION CONDITIONS (Other monitor and Sensor)

Other Monitor (There is no temporary DTC stored in memory for the item monitored below)

- Not applicable

Sensor (The sensor below is determined to be normal)

- Not applicable

DTC SET CONDITIONS

Logic Flow Chart

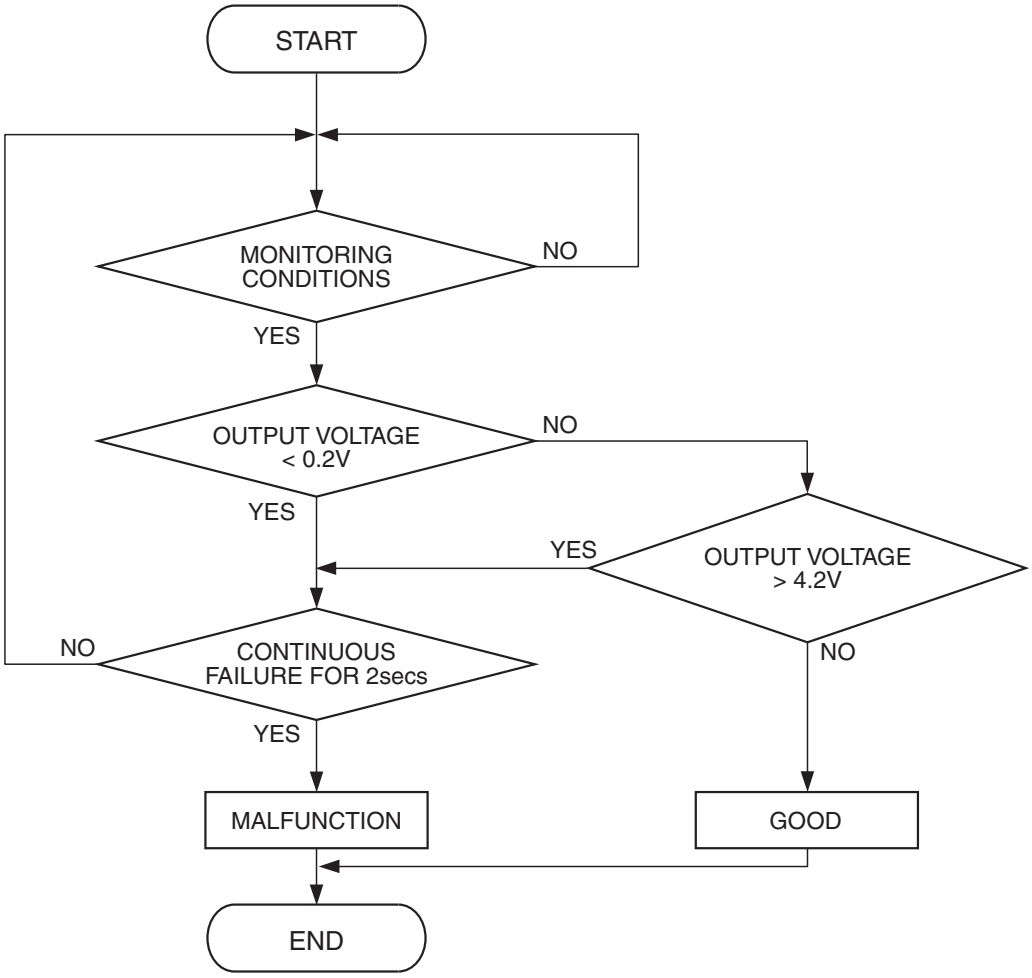

AK401549

Check Conditions

- Battery positive voltage is between 11 and 16.5 volts.
- 2 seconds or more have passed since the engine staring sequence was completed.

Judgement Criterion

- Fuel level sensor output voltage has continued to be lower than 0.2 volt for 2 seconds.

OBD-II DRIVE CYCLE PATTERN

Refer to Diagnostic Function –OBD-II Drive Cycle – Pattern 23 P.13A-12.

TROUBLESHOOTING HINTS (The most likely causes for this code to be set are:)

- Fuel level sensor failed.
- Shorted fuel level sensor circuit or connector damage.
- ECM failed.

TSB Revision

DIAGNOSIS

Required Special Tools:

- MB991958: Scan Tool (M.U.T.-III Sub Assembly)
  - MB991824: V.C.I.
  - MB991827: USB Cable
  - MB991911: Main Harness B

STEP 1. Check fuel gauge.

Q: Is the fuel gauge functioning?

YES : Go to Step 4.
NO : Go to Step 2.

STEP 2. Check harness connector C-117 at ECM and harness connector D-10 at fuel level sensor (sub) for damage.

Q: Is the harness connector in good condition?

YES : Go to Step 3.
NO : Repair or replace it. Refer to GROUP 00E, Harness Connector Inspection P.00E-2 Then go to Step 10.

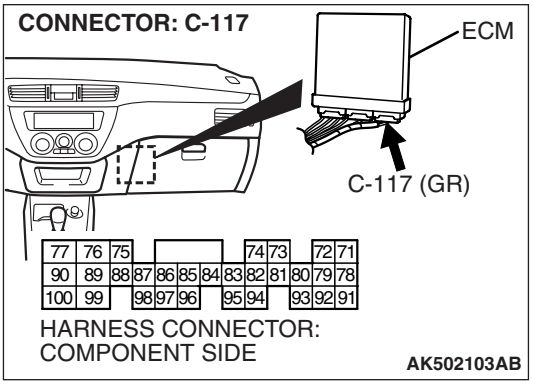

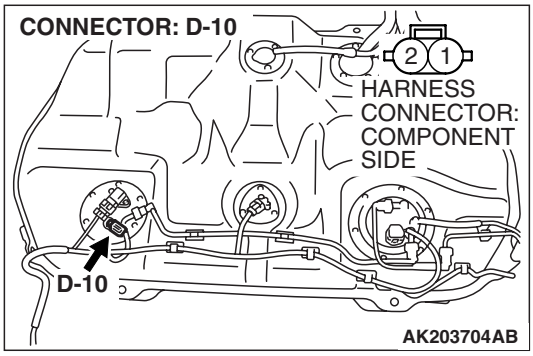

STEP 3. Check for short circuit to ground between ECM connector C-117 (terminal No. 97) and fuel level sensor (sub) connector D-10 (terminal No. 1).

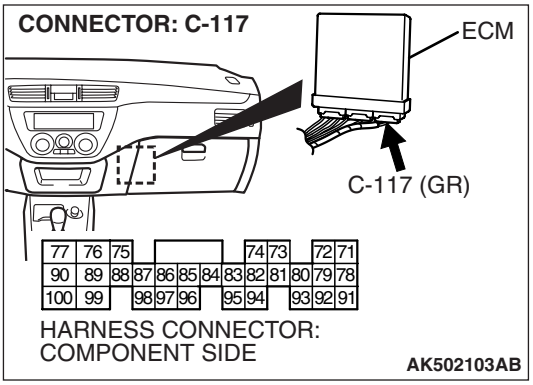

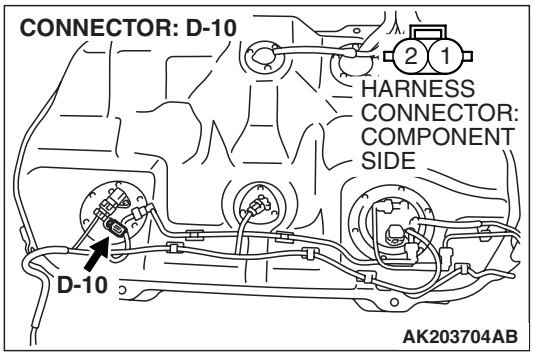

NOTE: Check harness after checking intermediate connectors C-122, C-113 and D-34. If intermediate connectors are damaged, repair or replace them. Refer to GROUP 00E, Harness Connector Inspection P.00E-2. Then go to Step 10.

Q: Is the harness wire in good condition?

YES : Refer to GROUP 54A, Chassis Electrical – Combination Meters Assembly and Vehicle Speed Sensor –Equipment Diagnosis –Symptom Chart P.54A-73.

NO : Repair it. Then go to Step 10.

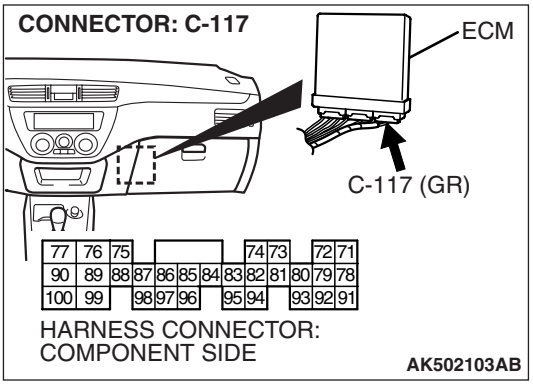

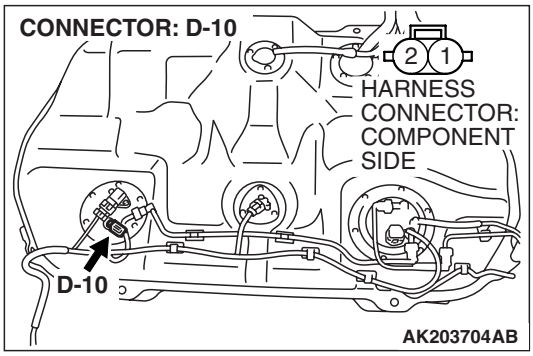

STEP 4. Check harness connector C-117 at ECM and harness connector D-10 at fuel level sensor (sub) for damage.

Q: Is the harness connector in good condition?

YES : Go to Step 5.

NO : Repair or replace it. Refer to GROUP 00E, Harness Connector Inspection P.00E-2 Then go to Step 10.

STEP 5. Check for open circuit between fuel level sensor (sub) connector D-10 (terminal No. 1) and ECM connector C-117 (terminal No. 97).

NOTE: Check harness after checking intermediate connectors C-122, C-113 and D-34. If intermediate connectors are damaged, repair or replace them. Refer to GROUP 00E, Harness Connector Inspection P.00E-2. Then go to Step 10.

Q: Is the harness wire in good condition?

YES : Go to Step 6.

NO : Repair it. Then go to Step 10.

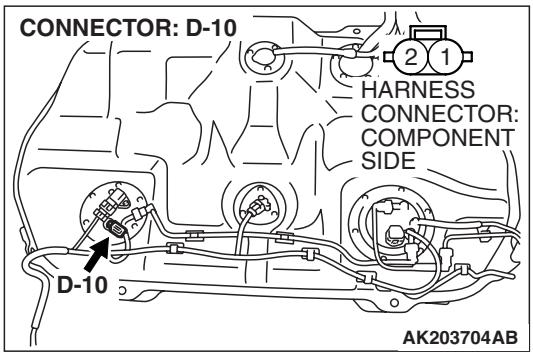

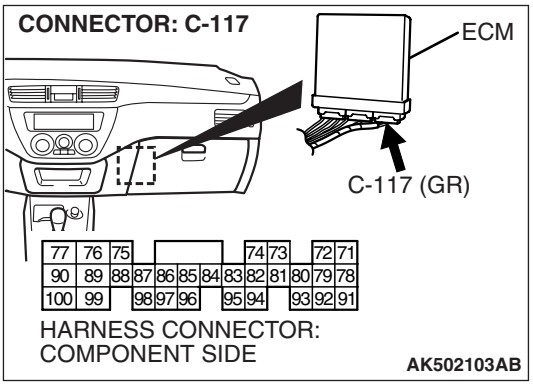

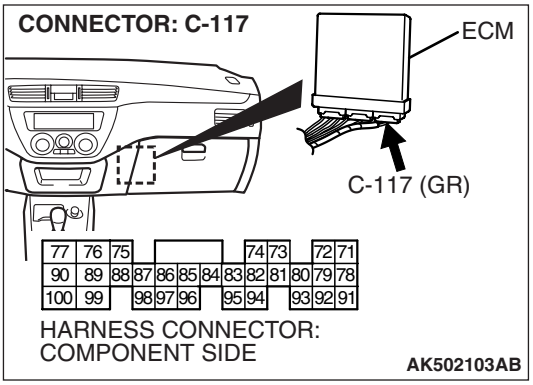

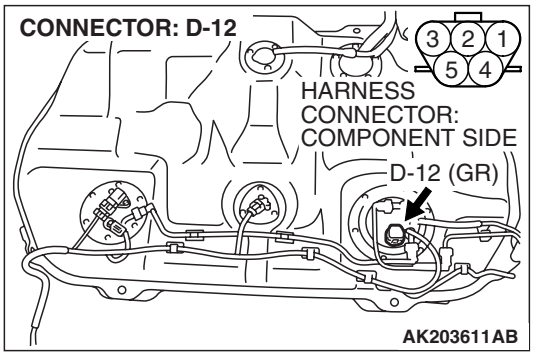

STEP 6. Check harness connector C-117 at ECM and harness connector D-12 at fuel level sensor (main) for damage.

Q: Is the harness connectors in good condition?

YES : Go to Step 7.

NO : Repair or replace it. Refer to GROUP 00E, Harness Connector Inspection P.00E-2 Then go to Step 10.

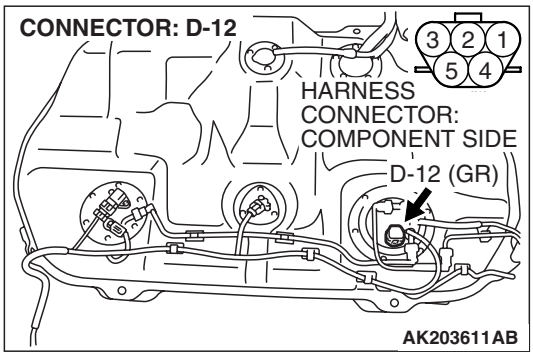

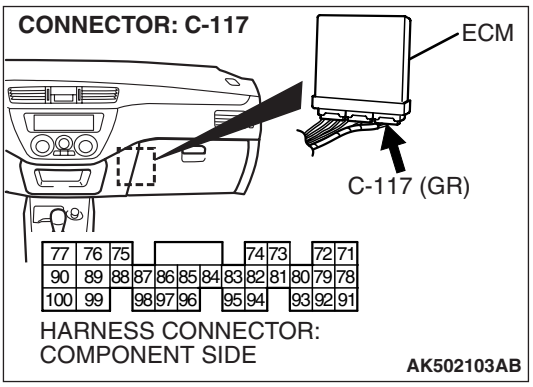

STEP 7. Check for short circuit to ground between fuel level sensor (main) connector D-12 (terminal No. 2) and ECM connector C-117 (terminal No. 95).

NOTE: Check harness after checking intermediate connectors C-122, C-113 and D-34. If intermediate connectors are damaged, repair or replace them. Refer to GROUP 00E, Harness Connector Inspection P.00E-2. Then go to Step 10.

Q: Is the harness wire in good condition?

YES : Go to Step 8.
NO : Repair it. Then go to Step 10.

STEP 8. Check for short circuit to ground between fuel level sensor (sub) connector D-10 (terminal No. 2) and fuel level sensor (main) connector D-12 (terminal No. 2).

Q: Is the harness wire in good condition?

YES : Go to Step 9.
NO : Repair it. Then go to Step 10.

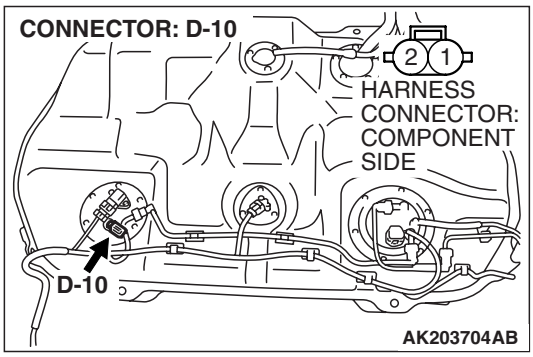

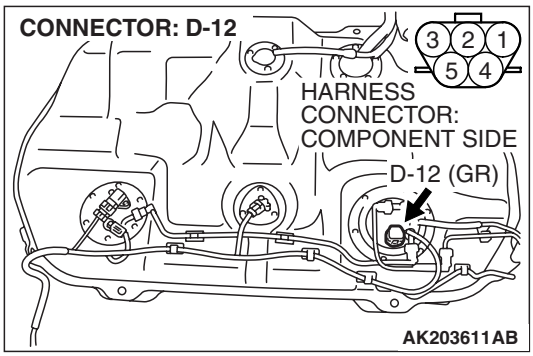

STEP 9. Check the trouble symptoms.

(1) Carry out a test drive with the drive cycle pattern. Refer to Diagnostic Function –OBD-II Drive Cycle –Pattern 23 P.13A-12.
(2) Check the diagnostic trouble code (DTC).

Q: Is DTC P0462 set?

YES : Replace the ECM. Then go to Step 10.
NO : It can be assumed that this malfunction is intermittent. Refer to GROUP 00, How to Use Troubleshooting/Inspection Service Points –How to Cope with Intermittent Malfunctions P.00-13.

STEP 10. Test the OBD-II drive cycle.

(1) Carry out a test drive with the drive cycle pattern. Refer to Diagnostic Function –OBD-II Drive Cycle –Pattern 23 P.13A-12.

(2) Check the diagnostic trouble code (DTC).

Q: Is DTC P0462 set?

YES : Retry the troubleshooting.

NO : The inspection is complete.

DTC P0463: Fuel Level Sensor Circuit High Input

Fuel Level Sensor Circuit

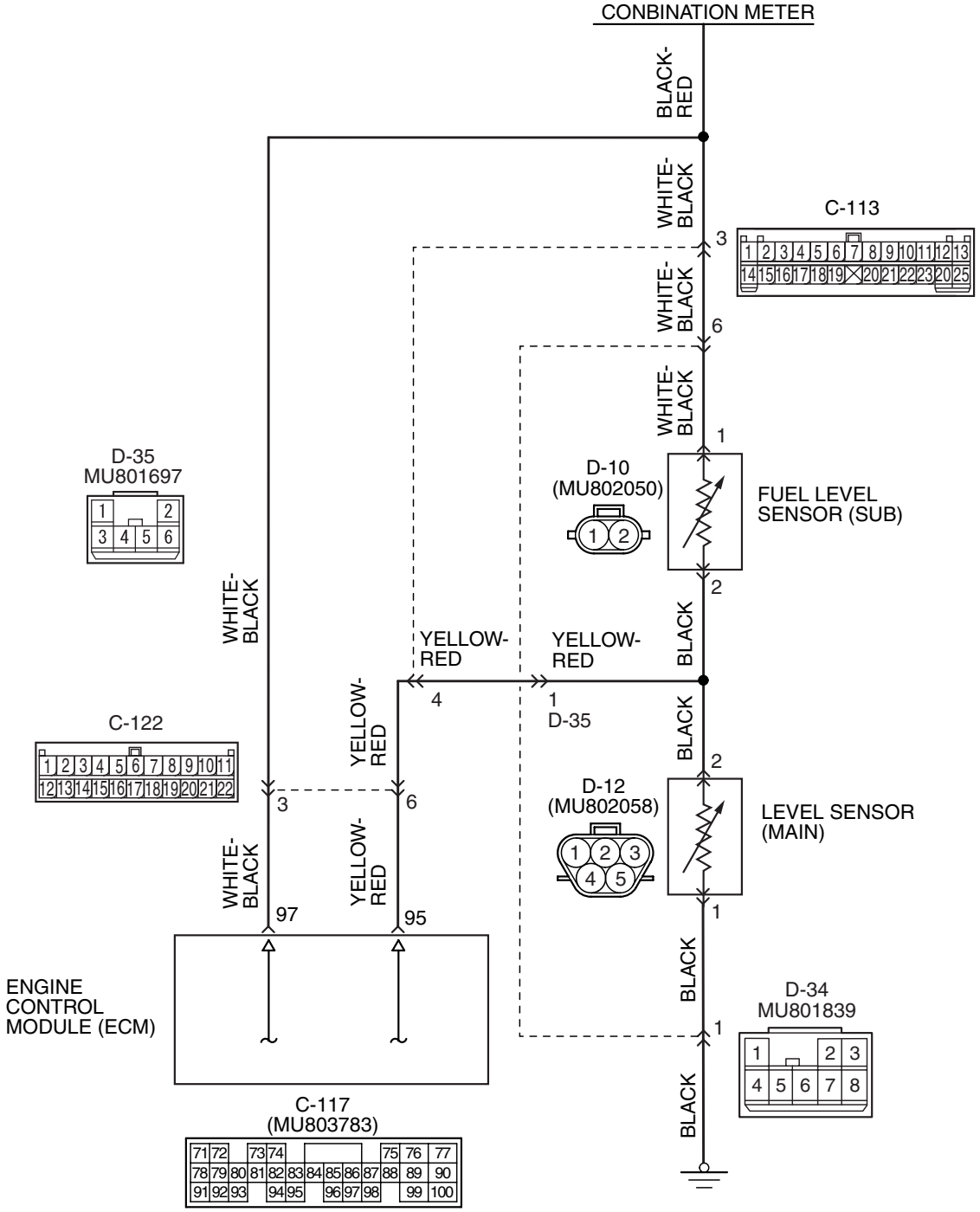

AK502079

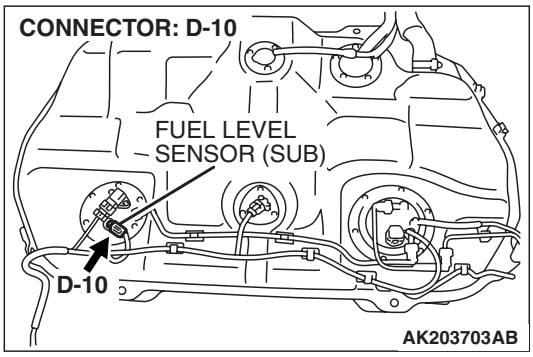

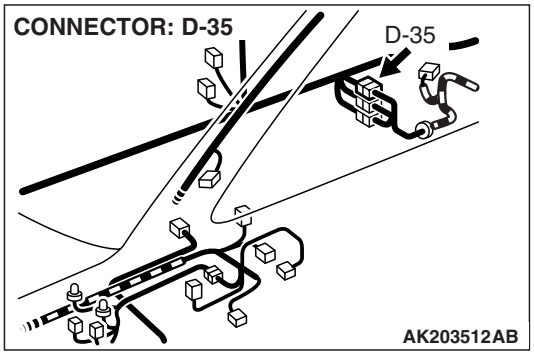

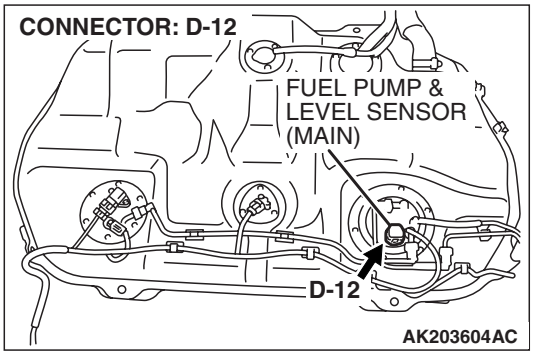

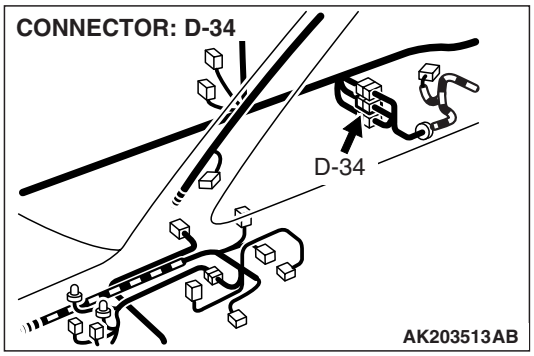

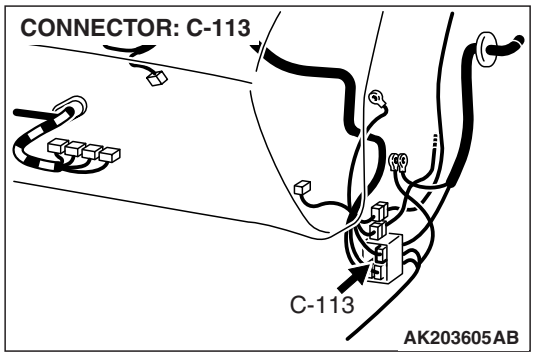

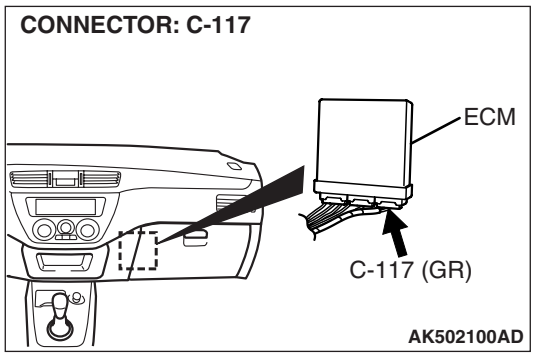

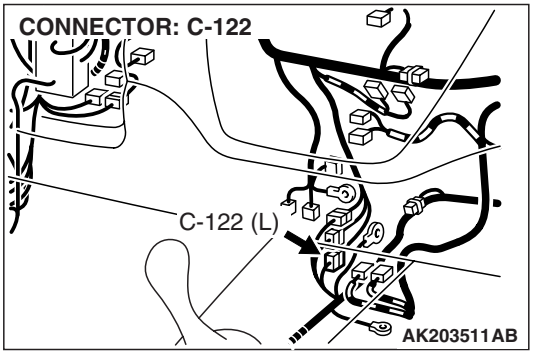

CIRCUIT OPERATION

- The fuel level sensor output voltage is input in ECM (terminal No. 97).

TECHNICAL DESCRIPTION

- Branch the output voltage from the fuel level sensor circuit, and input it into ECM.
- The ECM checks whether this voltage is within a specified range.

DESCRIPTIONS OF MONITOR METHODS

An open circuit is detected while monitoring the intake air temperature sensor output.

MONITOR EXECUTION

Continuous

MONITOR EXECUTION CONDITIONS (Other monitor and Sensor)

Other Monitor (There is no temporary DTC stored in memory for the item monitored below)

- Not applicable

Sensor (The sensor below is determined to be normal)

- Not applicable

DTC SET CONDITIONS

Logic Flow Chart

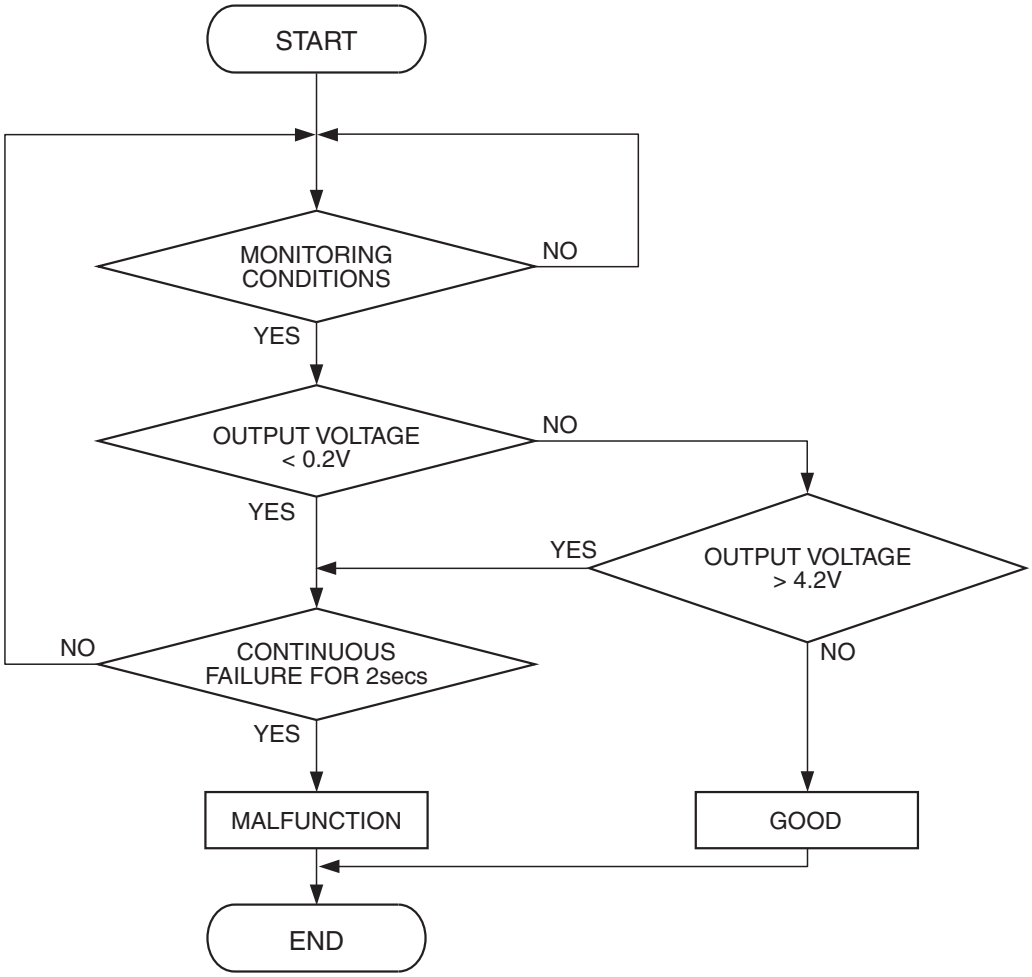

AK401549

Check Conditions

- Battery positive voltage is between 11 and 16.5 volts.
- 2 seconds or more have passed since the engine staring sequence was completed.

Judgement Criterion

- Fuel level sensor output voltage has continued to be higher than 4.2 volt for 2 seconds.

OBD-II DRIVE CYCLE PATTERN

Refer to Diagnostic Function –OBD-II Drive Cycle – Pattern 23 P.13A-12.

TROUBLESHOOTING HINTS (The most likely causes for this code to be set are:)

- Fuel level sensor failed.
- Open or shorted fuel level sensor circuit, or connector damage.
- ECM failed.

DIAGNOSIS

Required Special Tools:

- MB991958: Scan Tool (M.U.T.-III Sub Assembly)
  - MB991824: V.C.I.
  - MB991827: USB Cable
  - MB991911: Main Harness B

STEP 1. Check fuel gauge.

Q: Is the fuel gauge functioning?

YES : Go to Step 2.

NO : Refer to GROUP 54A, Chassis Electrical – Combination Meters Assembly and Vehicle Speed Sensor –Equipment Diagnosis –Symptom Chart P.54A-48.

STEP 2. Check harness connector C-117 at ECM and harness connector D-10 at fuel level sensor (sub) for damage.

Q: Is the harness connector in good condition?

YES : Go to Step 3.

NO : Repair or replace them. Refer to GROUP 00E, Harness Connector Inspection P.00E-2 Then go to Step 7.

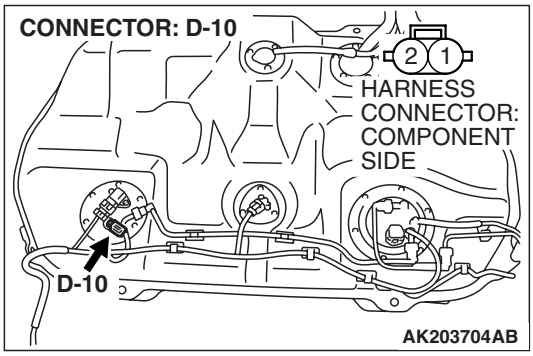

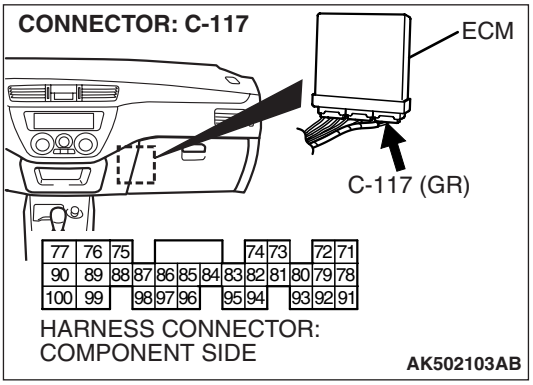

STEP 3. Check for short circuit to ground between ECM connector C-117 (terminal No. 95) and fuel level sensor (sub) connector D-10 (terminal No. 2).

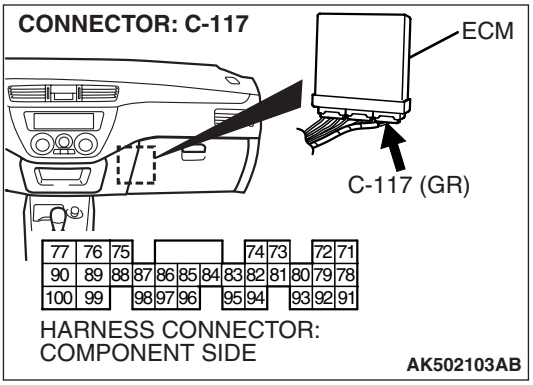

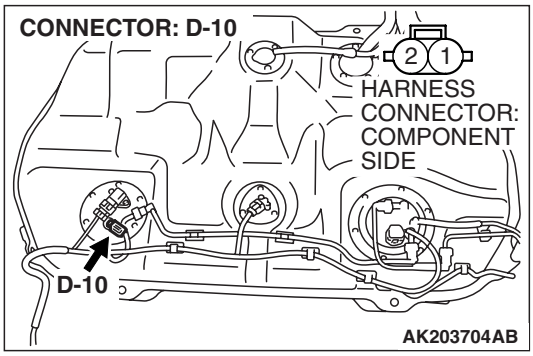

NOTE: Check harness after checking intermediate connectors C-122, C-113 and D-34. If intermediate connectors are damaged, repair or replace them. Refer to GROUP 00E, Harness Connector Inspection P.00E-2. Then go to Step 7.

Q: Is the harness wire in good condition?

YES : Go to Step 4.

NO : Repair it. Then go to Step 7.

STEP 4. Check harness connector D-12 at fuel level sensor (main) for damage.

Q: Is the harness connector in good condition?

YES : Go to Step 5.

NO : Repair or replace them. Refer to GROUP 00E, Harness Connector Inspection P.00E-2 Then go to Step 7.

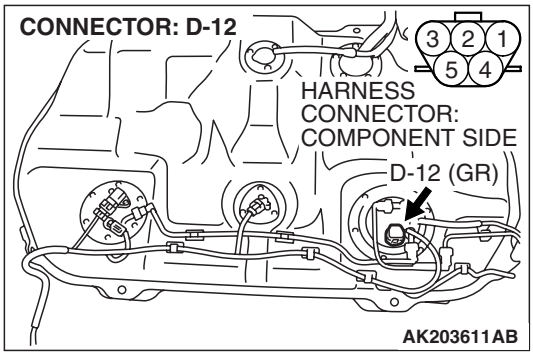

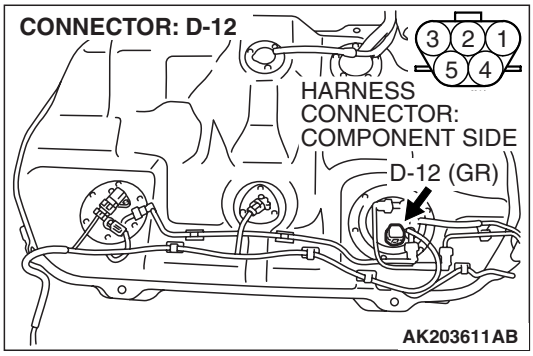

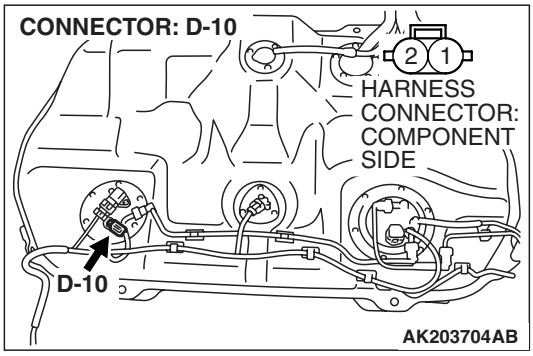

STEP 5. Check for open circuit and short circuit to ground between fuel level sensor (main) connector D-12 (terminal No. 2) and fuel level sensor (sub) connector D-10 (terminal No. 2).

Q: Is the harness wire in good condition?

YES : Go to Step 6.

NO : Repair it. Then go to Step 7.

STEP 6. Check the trouble symptoms.

(1) Carry out a test drive with the drive cycle pattern. Refer to Diagnostic Function –OBD-II Drive Cycle –Pattern 23 P.13A-12.

(2) Check the diagnostic trouble code (DTC).

Q: Is DTC P0463 set?

YES : Replace the ECM. Then go to Step 7.

NO : It can be assumed that this malfunction is intermittent. Refer to GROUP 00, How to Use Troubleshooting/Inspection Service Points –How to Cope with Intermittent Malfunctions P.00-13.

STEP 7. Test the OBD-II drive cycle.

(1) Carry out a test drive with the drive cycle pattern. Refer to Diagnostic Function –OBD-II Drive Cycle –Pattern 23 P.13A-12.

(2) Check the diagnostic trouble code (DTC).

Q: Is DTC P0463 set?

YES : Retry the troubleshooting.

NO : The inspection is complete.

DTC P0500: Vehicle Speed Sensor

Vehicle Speed Sensor Circuit

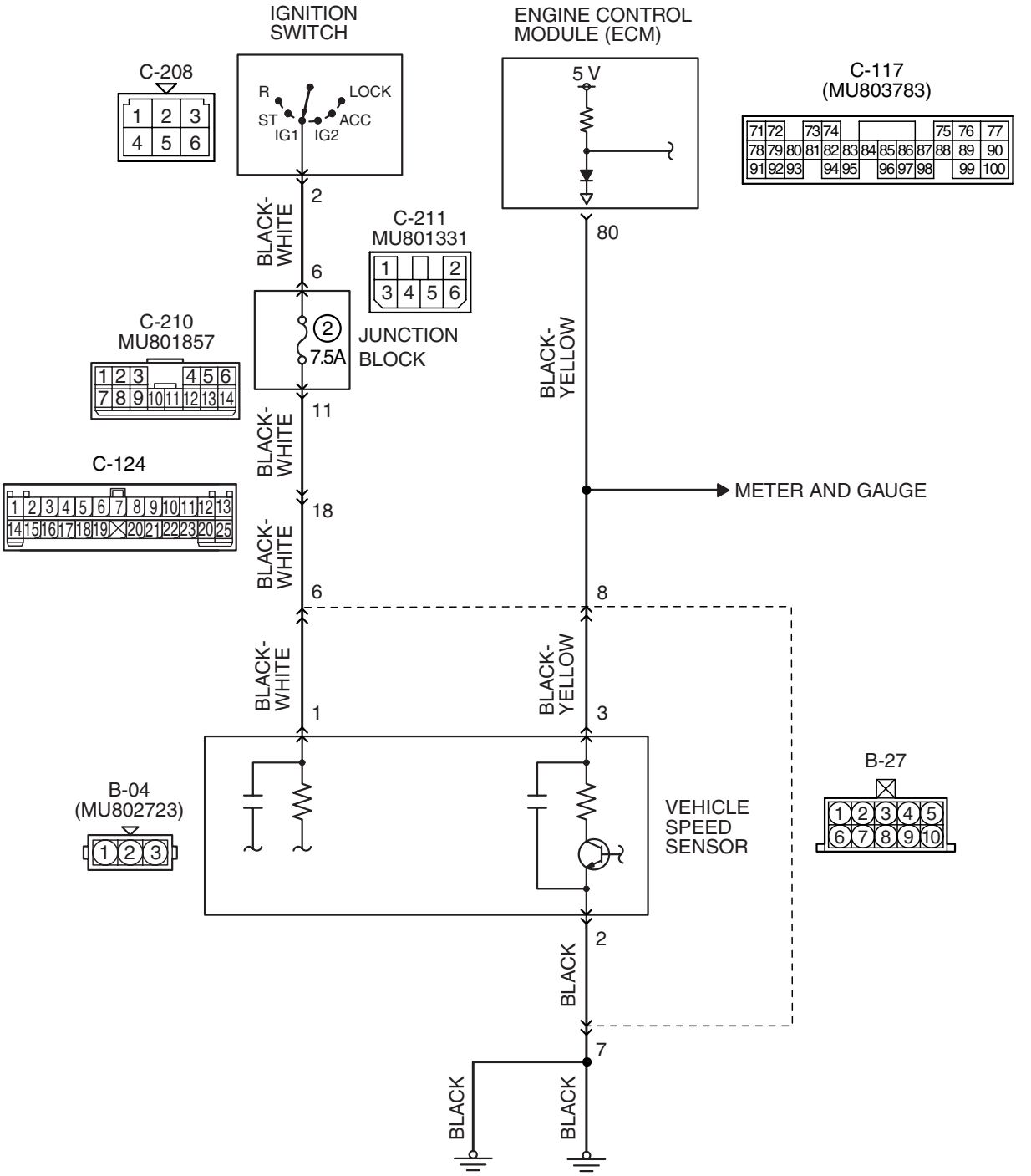

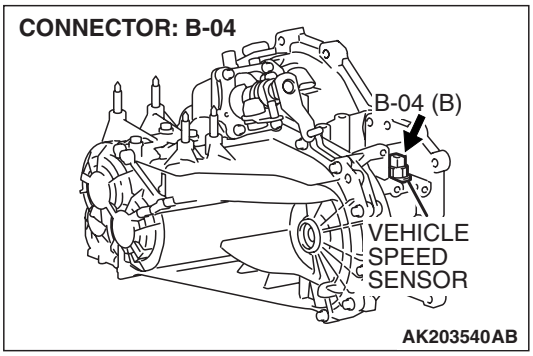

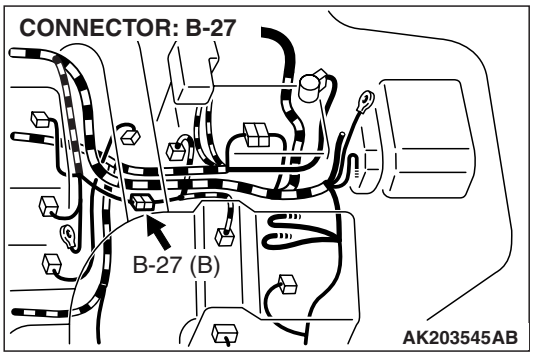

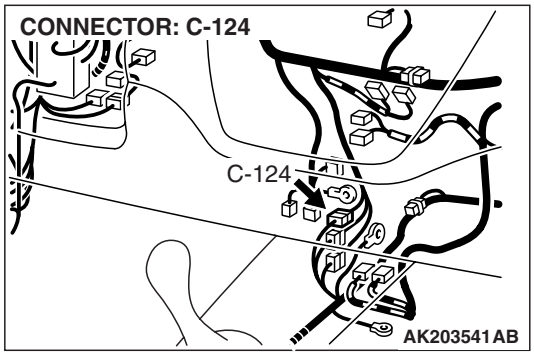

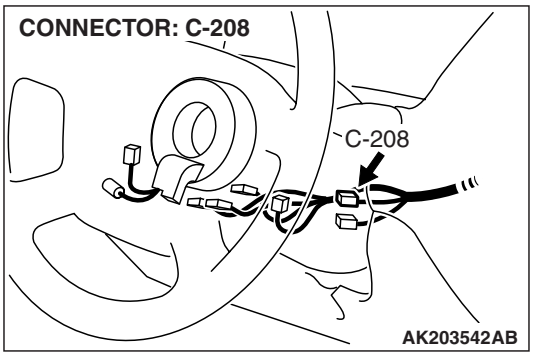

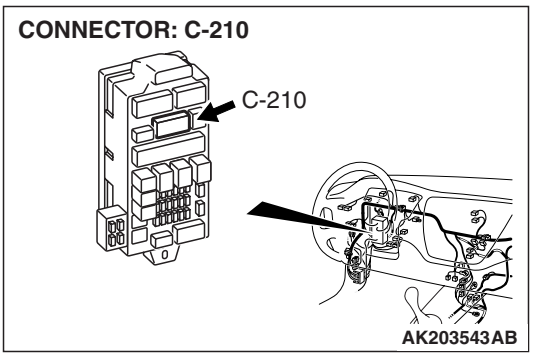

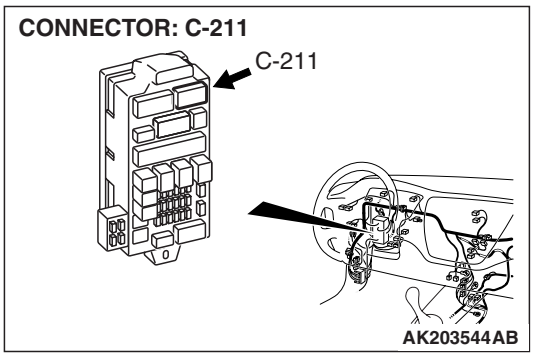

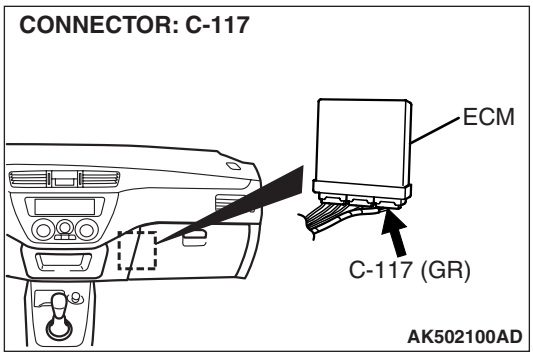

CIRCUIT OPERATION

- A 5-volt voltage is applied to the vehicle speed sensor output terminal (terminal No. 3) from the ECM (terminal No. 80). The vehicle speed sensor generates a pulse signal when the output terminal is opened and grounded.

TECHNICAL DESCRIPTION

- The vehicle speed sensor converts the vehicle speed into pulse signals and inputs them to the ECM.
- The vehicle speed sensor outputs a pulse signal while the vehicle is driven.
- The ECM checks whether the pulse signal is output.

DESCRIPTIONS OF MONITOR METHODS

- If the vehicle speed sensor output does not change while the vehicle is being driven in the medium- to high-speed range, a malfunction is determined to have occurred.

MONITOR EXECUTION

- Continuous

MONITOR EXECUTION CONDITIONS (Other monitor and Sensor)

Other Monitor (There is no temporary DTC stored in memory for the item monitored below)

- Not applicable

Sensor (The sensor below is determined to be normal)

- Volume airflow sensor

DTC SET CONDITIONS

Logic Flow Chart

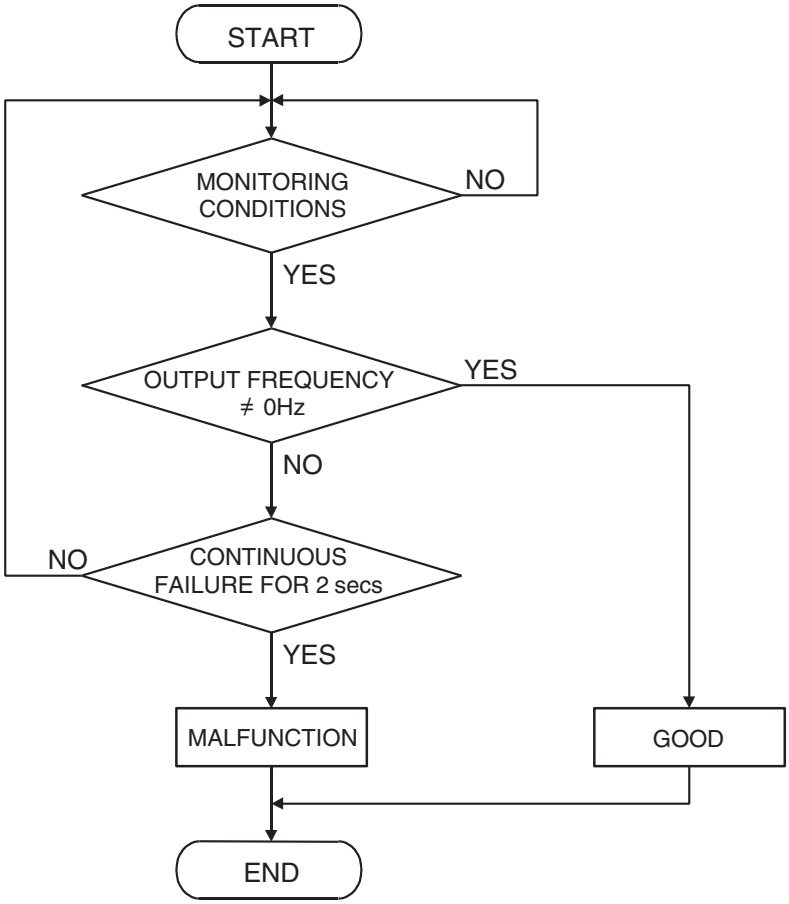

AK200919

Check Conditions

- 2 seconds or more have passed the engine starting sequence was completed.
- Engine speed is at between 2,000 and 4,000 r/min.
- Volumetric efficiency is at between 60 and 80 percent.

Judgement Criterion

- Vehicle speed sensor output voltage has not changed (no pulse signal is input) for 2 seconds.

OBD-II DRIVE CYCLE PATTERN

None

TROUBLESHOOTING HINTS (The most likely causes for this code to be set are:)

- Vehicle speed sensor failed.
- Open or shorted vehicle speed sensor circuit, harness damage, or connector damage.
- ECM failed.

DIAGNOSIS

Required Special Tools:

- MB991958: Scan Tool (M.U.T.-III Sub Assembly)
  - MB991824: V.C.I.
  - MB991827: USB Cable
  - MB991911: Main Harness B

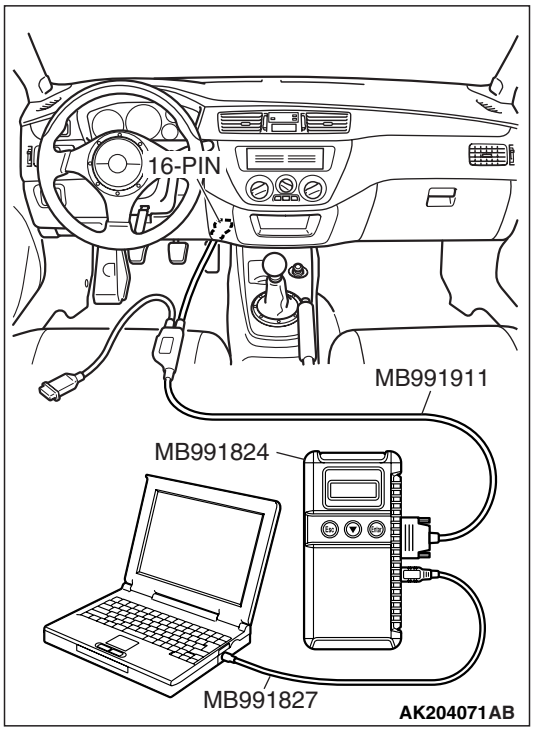

STEP 1. Using scan tool MB991958, check data list item 24: Vehicle Speed Sensor.

⚠ CAUTION

To prevent damage to scan tool MB991958, always turn the ignition switch to the "LOCK" (OFF) position before connecting or disconnecting scan tool MB991958.

(1) Connect scan tool MB991958 to the data link connector.
(2) Start the engine.
(3) Set scan tool MB991958 to the data reading mode for item 24, Vehicle Speed Sensor.
  - Check that the speedometer and MB991958 display speed match when traveling at a vehicle speed of 40 km/h (25 mph).

(4) Turn the ignition switch to the "LOCK" (OFF) position.

Q: Is the sensor operating properly?

YES : It can be assumed that this malfunction is intermittent. Refer to GROUP 00, How to Use Troubleshooting/Inspection Service Points –How to Cope with Intermittent Malfunctions P.00-13.

NO : Go to Step 2.

STEP 2. Check speedometer.

Q: Is the speedometer functioning?

YES : Go to Step 3.

NO : Go to Step 8.

STEP 3. Using the oscilloscope, check the sensor output voltage at ECM connector C-117.

(1) Do not disconnect the ECM connector C-117.
(2) Disconnect the combination meter connector and A/C-ECU connector.

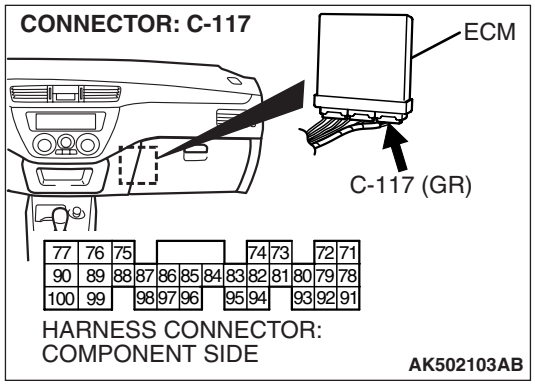

(3) Connect the oscilloscope probe to ECM terminal No. 80 by backprobing.
(4) Start the engine.

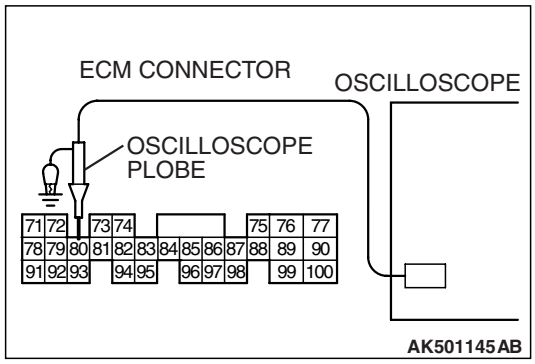

(5) Check the waveform.
- The waveform should show a pattern similar to the illustration while the vehicle is being moved.

(6) Turn the ignition switch to the "LOCK" (OFF) position.

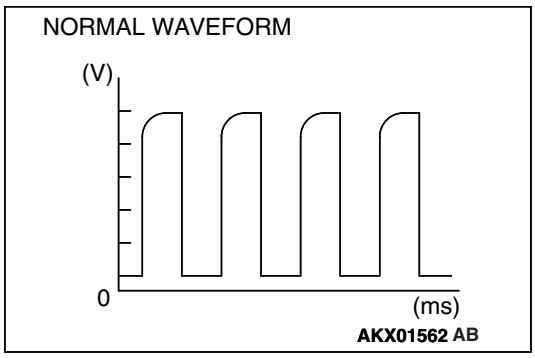

Q: Is the waveform normal?

YES : Go to Step 4.
NO : Go to Step 6.

STEP 4. Check harness connector C-117 at ECM for damage.

Q: Is the harness connector in good condition?

YES : Go to Step 5.
NO : Repair or replace it. Refer to GROUP 00E, Harness Connector Inspection P.00E-2. Then go to Step 17.

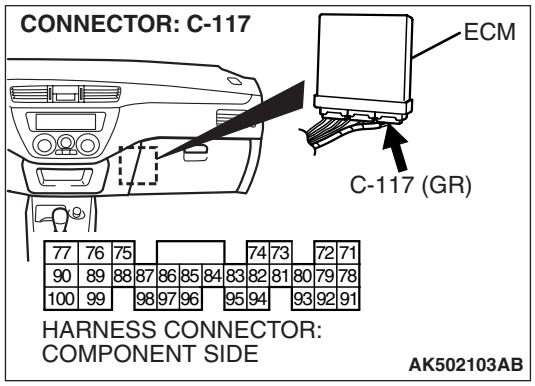

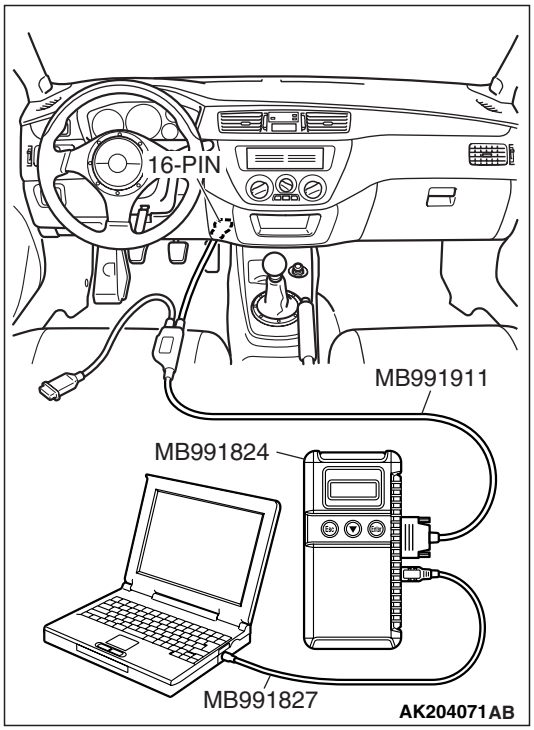

STEP 5. Using scan tool MB991958, check data list item 24: Vehicle Speed Sensor.

⚠ CAUTION

To prevent damage to scan tool MB991958, always turn the ignition switch to the "LOCK" (OFF) position before connecting or disconnecting scan tool MB991958.

(1) Connect scan tool MB991958 to the data link connector.
(2) Start the engine.
(3) Set scan tool MB991958 to the data reading mode for item 24, Vehicle Speed Sensor.
- Check that the speedometer and MB991958 display speed match when traveling at a vehicle speed of 40 km/h (25 mph).

(4) Turn the ignition switch to the "LOCK" (OFF) position.

Q: Is the sensor operating properly?

YES : It can be assumed that this malfunction is intermittent. Refer to GROUP 00, How to Use Troubleshooting/Inspection Service Points –How to Cope with Intermittent Malfunctions P.00-13.

NO : Replace the ECM. Then go to Step 17.

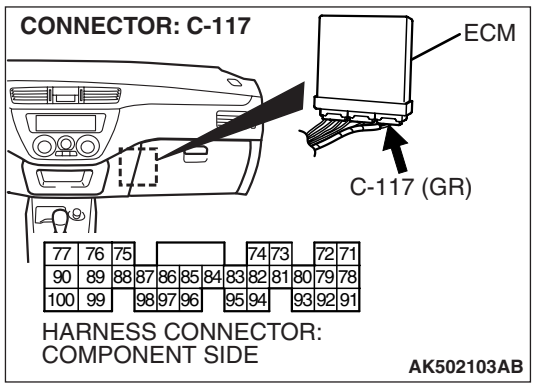

STEP 6. Measure the sensor supply voltage at ECM connector C-117 by backprobing.

(1) Do not disconnect the ECM connector C-117.
(2) Disconnect the vehicle speed sensor connector B-04.
(3) Turn the ignition switch to the "ON" position.

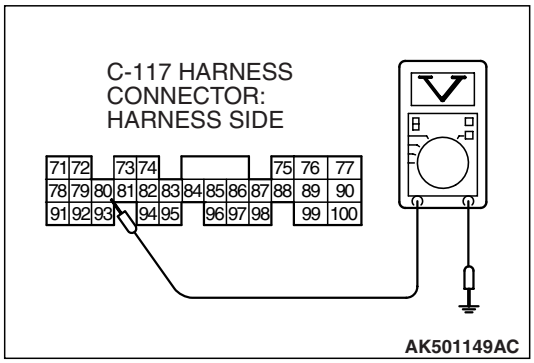

(4) Measure the voltage between terminal No. 80 and ground by backprobing.
- Voltage should be between 4.8 and 5.2 volts.

(5) Turn the ignition switch to the "LOCK" (OFF) position.

Q: Is the measured voltage between 4.8 and 5.2 volts?

YES : Go to Step 7.

NO : Replace the ECM. Then go to Step 17.

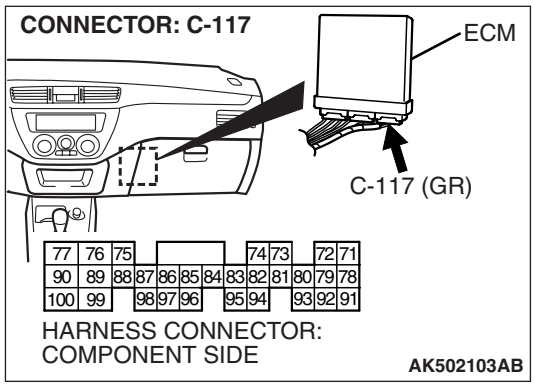

STEP 7. Check harness connector C-117 at ECM for damage.

Q: Is the harness connector in good condition?

YES : Check harness connector B-27 at intermediate connector for damage, and repair or replace as required. Refer to GROUP 00E, Harness Connector Inspection P.00E-2. If the intermediate connector is in good condition, repair harness wire between vehicle speed sensor connector B-04 (terminal No. 3) and ECM connector C-117 (terminal No. 80) because of open circuit. Then go to Step 17.

NO : Repair or replace it. Refer to GROUP 00E, Harness Connector Inspection P.00E-2. Then go to Step 17.

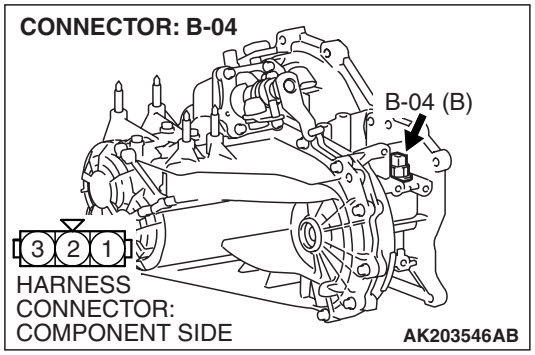

STEP 8. Check harness connector B-04 at vehicle speed sensor for damage.

Q: Is the harness connector in good condition?

YES : Go to Step 9.

NO : Repair or replace it. Refer to GROUP 00E, Harness Connector Inspection P.00E-2. Then go to Step 17.

STEP 9. Measure the power supply voltage at vehicle speed sensor harness side connector B-04.

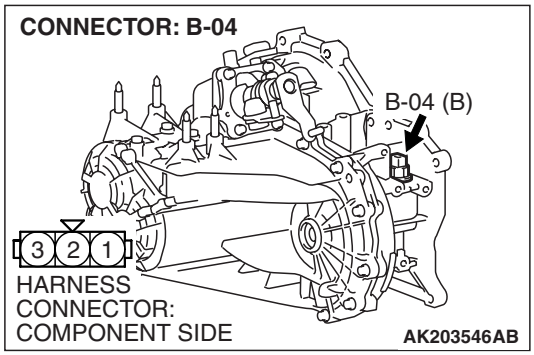

(1) Disconnect connector B-04 and measure at the harness side.
(2) Turn the ignition switch to the "ON" position.

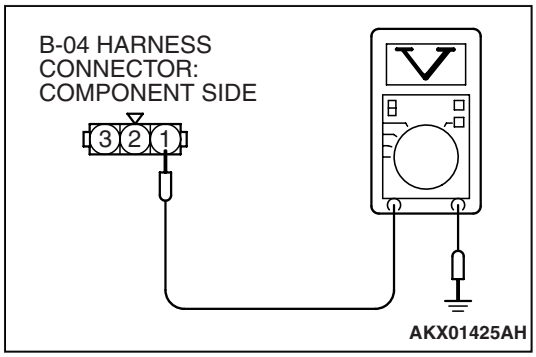

(3) Measure the voltage between terminal No. 1 and ground.
- Voltage should be battery positive voltage.

(4) Turn the ignition switch to the "LOCK" (OFF) position.

Q: Is battery positive voltage (approximately 12 volts) present?

YES : Go to Step 10.

NO : Check harness connectors C-211, C-210, C-124 and B-27 at intermediate connector for damage, and repair or replace as required. Refer to GROUP 00E, Harness Connector Inspection P.00E-2. If the intermediate connectors are in good condition, repair the harness wire between ignition switch connector C-208 (terminal No. 2) and vehicle speed sensor connector B-04 (terminal No. 1) because of open circuit or short circuit to ground. Then go to Step 17.

STEP 10. Check for continuity at vehicle speed sensor harness side connector B-04.

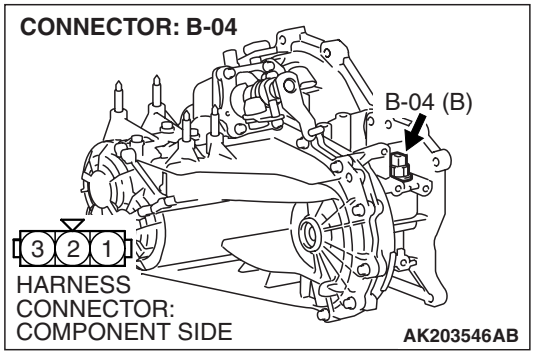

(1) Disconnect connector B-04 and measure at the harness side.

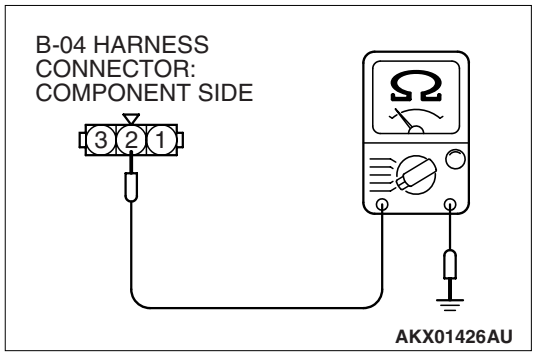

(2) Check for the continuity between terminal No. 2 and ground.
- Should be less than 2 ohms.

Q: Does continuity exist?

YES : Go to Step 11.

NO : Repair the harness wire between vehicle speed sensor connector B-04 (terminal No. 2) and ground because of an open circuit or harness damage. Then go to Step 17.

STEP 11. Measure the sensor supply voltage at vehicle speed sensor harness side connector B-04.

(1) Disconnect the vehicle speed sensor connector B-04 and measure at the harness side.
(2) Disconnect the combination meter connector and A/C-ECU connector.
(3) Turn the ignition switch to the "ON" position.

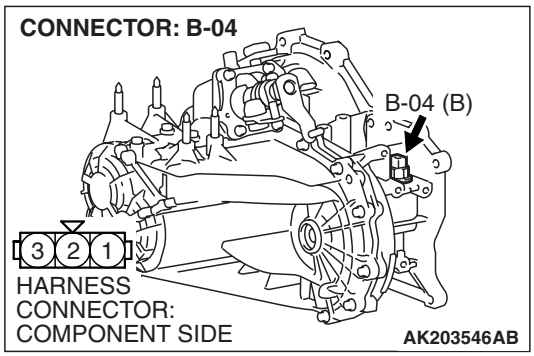

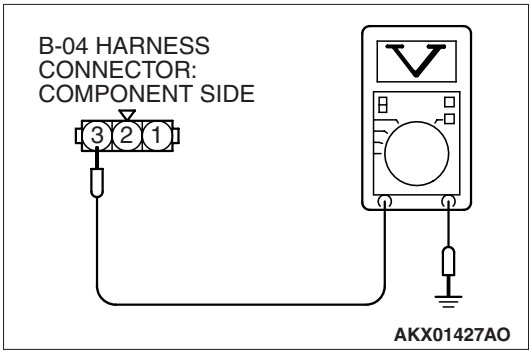

(4) Measure the voltage between terminal No. 3 and ground.
- Voltage should be between 4.8 and 5.2 volts.

(5) Turn the ignition switch to the "LOCK" (OFF) position.

Q: Is the measured voltage between 4.8 and 5.2 volts?

YES : Go to Step 12.
NO : Check connector B-27 at intermediate connector for damage, and repair or replace as the required. Refer to GROUP 00E, Harness Connector Inspection P.00E-2. If the intermediate connector is in good condition, repair the harness wire between vehicle speed sensor connector B-04 (terminal No. 3) and ECM connector C-117 (terminal No. 80) because of short circuit to ground or harness damage. Then go to Step 17.

STEP 12. Check the vehicle speed sensor.

Refer to GROUP 54A, Combination Meter –Inspection –Vehicle Speed Sensor Check P.54A-77.

Q: Is the vehicle speed sensor normal?

YES : Go to Step 13.
NO : Replace the vehicle speed sensor. Then go to Step 17.

STEP 13. Check harness connector C-117 at ECM for damage.

Q: Is the harness connector in good condition?

YES : Go to Step 14.
NO : Repair or replace it. Refer to GROUP 00E, Harness Connector Inspection P.00E-2. Then go to Step 17.

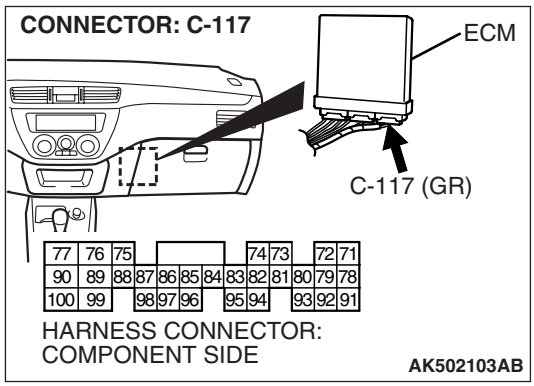

STEP 14. Check for harness damage between ignition switch connector C-208 (terminal No. 2) and vehicle speed sensor connector B-04 (terminal No. 1).

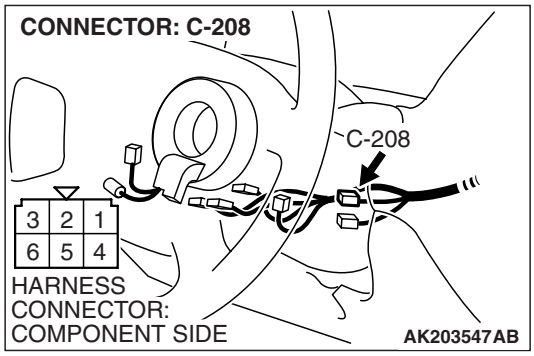

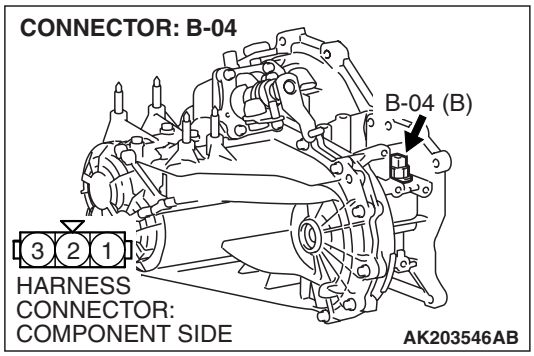

NOTE: Check harness after checking intermediate connectors C-211, C-210, C-124 and B-27. If any of the intermediate connectors are damaged, repair or replace them. Refer to GROUP 00E, Harness Connector Inspection P.00E-2. Then go to Step 17.

Q: Is the harness wire in good condition?

YES : Go to Step 15.

NO : Repair it. Then go to Step 17.

STEP 15. Check for harness damage between vehicle speed sensor connector B-04 (terminal No. 3) and ECM connector C-117 (terminal No. 80).

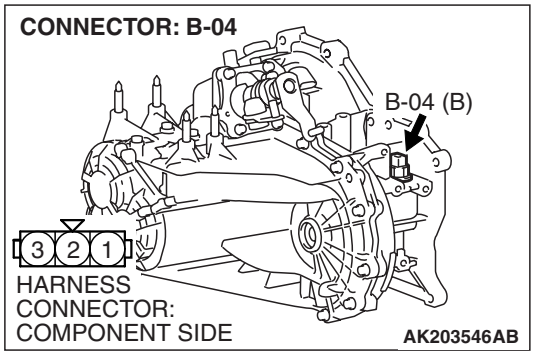

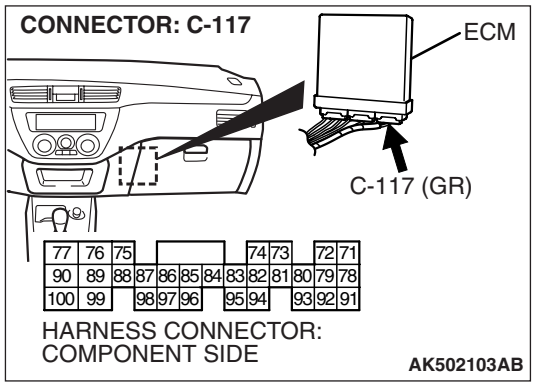

NOTE: Check the harness after checking the intermediate connector B-27. If the intermediate connector is damaged, repair or replace it. Refer to GROUP 00E, Harness Connector Inspection P.00E-2. Then go to Step 17.

Q: Is the harness wire in good condition?

YES : Go to Step 16.

NO : Repair it. Then go to Step 17.

STEP 16. Check for harness damage between vehicle speed sensor connector B-04 (terminal No. 2) and ground.

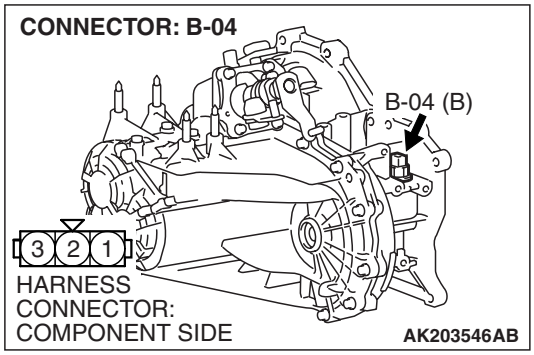

NOTE: Check the harness after checking the intermediate connector B-27. If the intermediate connector is damaged, repair or replace it. Refer to GROUP 00E, Harness Connector Inspection P.00E-2. Then go to Step 17.

Q: Is the harness wire in good condition?

YES : Check for harness wire damaged between vehicle speed sensor connector B-04 (terminal No. 3) and other system components because of a short circuit to ground. Then go to Step 17.

NO : Repair it. Then go to Step 17.

STEP 17. Using scan tool MB991958, check data list item 24: Vehicle Speed Sensor.

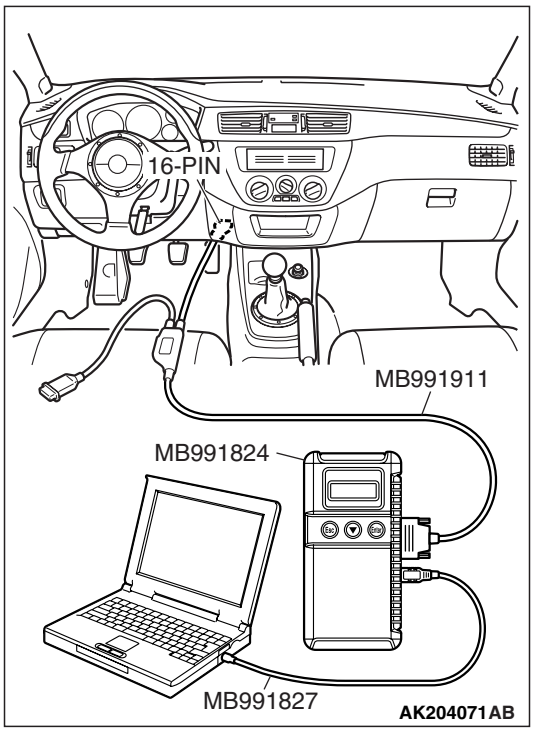

⚠ CAUTION

To prevent damage to scan tool MB991958, always turn the ignition switch to "LOCK" (OFF) position before connecting or disconnecting scan tool MB991958.

(1) Connect scan tool MB991958 to the data link connector.
(2) Start the engine.
(3) Set scan tool MB991958 to the data reading mode for item 24, Vehicle Speed Sensor.
- Check that the speedometer and MB991958 display speed match when traveling at a vehicle speed of 40 km/h (25 mph).

(4) Turn the ignition switch to the "LOCK" (OFF) position.

Q: Is the sensor operating properly?

YES : The inspection is complete.

NO : Retry the troubleshooting.

DTC P0506: Idle Control System RPM Lower Than Expected

Idle Air Control (IAC) Motor Circuit

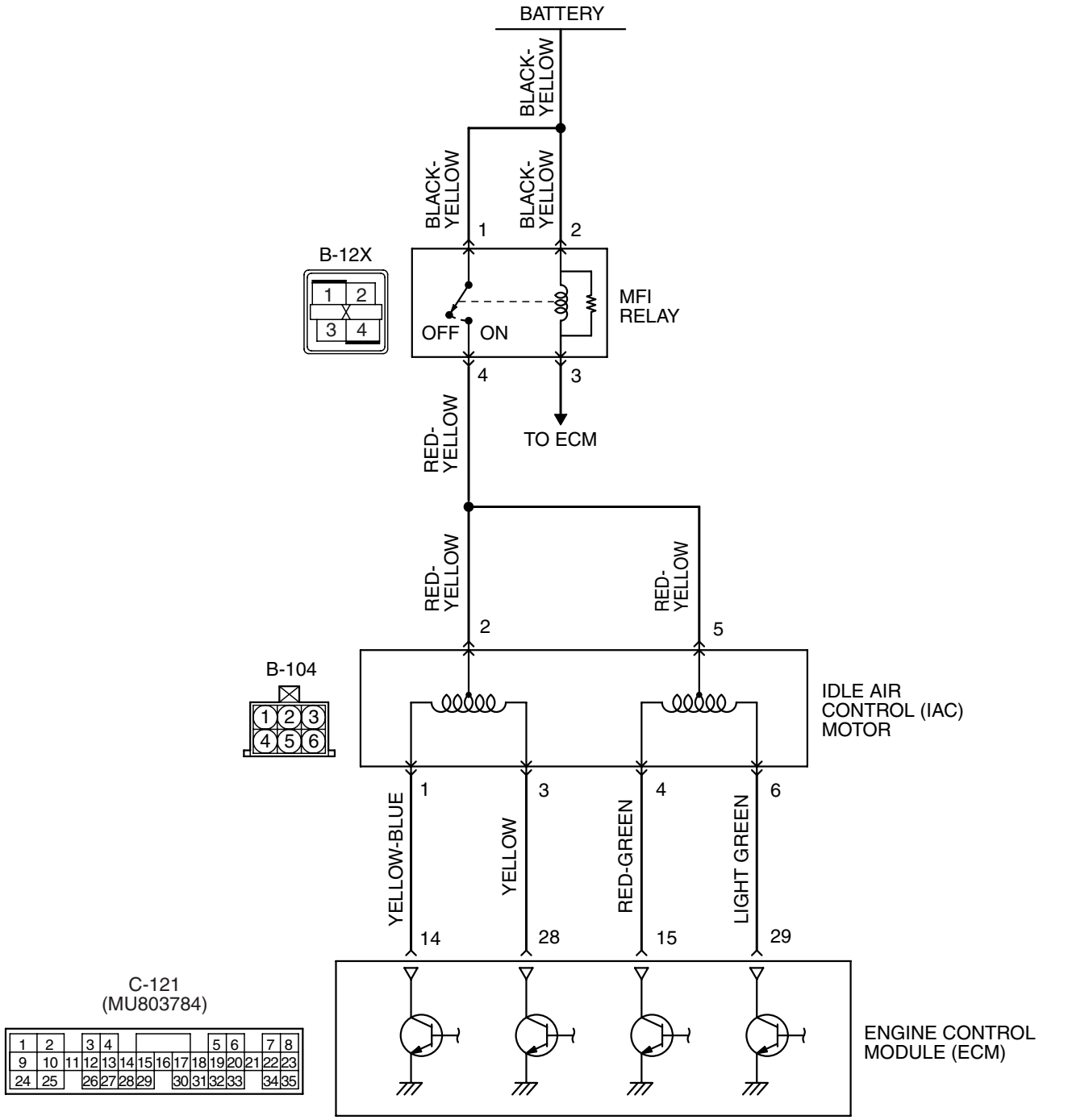

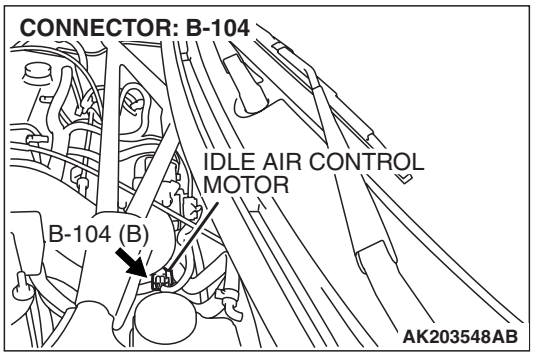

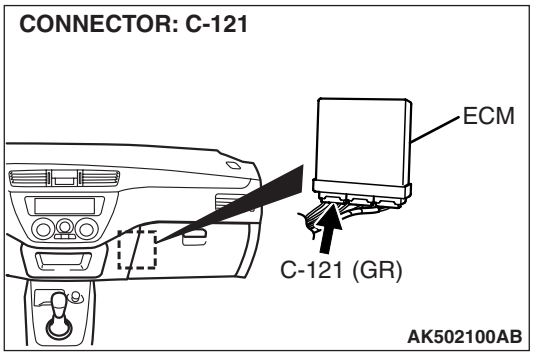

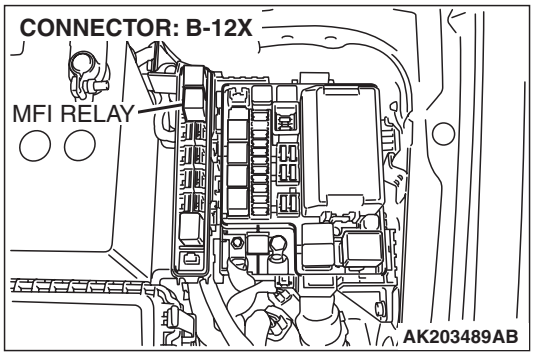

CIRCUIT OPERATION

- The idle air control motor power is supplied from the MFI relay (terminal No. 4).
- The ECM (terminals No. 14, No. 15, No. 28, No. 29) drives the stepper motor by sequentially turning "ON" the power transistors in the ECM and providing ground to the idle air control motor (terminals No. 1, No. 3, No. 4, No. 6).

TECHNICAL DESCRIPTION

- The amount of air taken in during idling is regulated by the opening and closing of the servo valve located in the air passage that bypasses the throttle body.
- If there is a malfunction of the IAC system, the actual engine speed will not be identical to the target engine speed.
- The ECM checks the difference between the actual engine speed and the target engine speed.

DESCRIPTIONS OF MONITOR METHODS

- Difference between actual and target idle speed is over the specified value.

MONITOR EXECUTION

- Continuous

MONITOR EXECUTION CONDITIONS (Other monitor and Sensor)

Other Monitor (There is no temporary DTC stored in memory for the item monitored below)

- Misfire monitor
- Exhaust gas recirculation (EGR) system monitor
- Fuel system monitor

Sensor (The sensor below is determined to be normal)

- Volume airflow sensor
- Engine coolant temperature sensor
- Intake air temperature sensor
- Barometric pressure sensor
- Throttle position sensor

DTC SET CONDITIONS

Logic Flow Chart

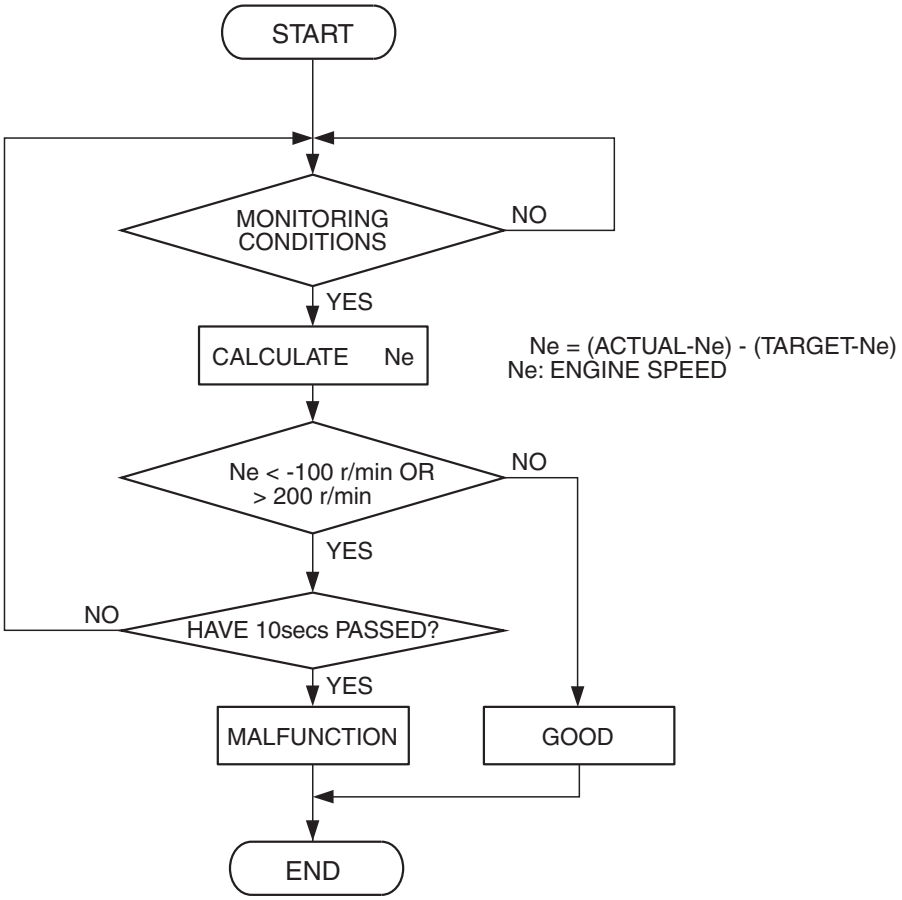

AK204002

Check Conditions

- Under the closed loop idle speed control.
- Engine coolant temperature is more than 77° C (171° F).
- Battery positive voltage is higher than 10 volts.
- Power steering pressure switch: "OFF".
- Volumetric efficiency is lower than 40 percent.
- Barometric pressure is higher than 76 kPa (22.4 in.Hg).
- Intake air temperature is higher than –10° C (14° F).
- 13 seconds have elapsed from the start of the previous monitoring.
- Target idle air control motor position is more than 100 steps.

Judgment Criterion

- The actual idle speed is more than 100 r/min lower than the target idle speed for 12 seconds.

OBD-II DRIVE CYCLE PATTERN

Refer to Diagnostic Function –OBD-II Drive Cycle – Pattern 18 P.13A-12.

TROUBLESHOOTING HINTS (The most likely causes for this code to be set are:)

- Idle air control motor failed.
- Open or shorted idle air control motor circuit, or connector damage.
- Throttle valve area is dirty.
- ECM failed.

DIAGNOSIS

Required Special Tools:

- MB991958: Scan Tool (M.U.T.-III Sub Assembly)
  - MB991824: V.C.I.
  - MB991827: USB Cable
  - MB991911: Main Harness B
- MB991709: Test Harness Set

STEP 1. Using scan tool MB991958, read the diagnostic trouble code (DTC).

⚠ CAUTION

To prevent damage to scan tool MB991958, always turn the ignition switch to the "LOCK" (OFF) position before connecting or disconnecting scan tool MB991958.

(1) Connect scan tool MB991958 to the data link connector.
(2) Turn the ignition switch to the "ON" position.
(3) Set scan tool MB991958, read the DTC.
(4) Turn the ignition switch to the "LOCK" (OFF) position.

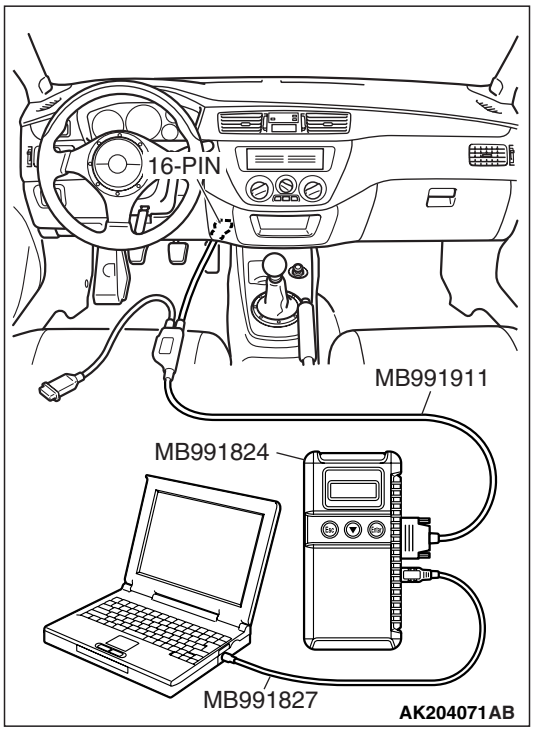

Q: Is the diagnostic trouble code other than P0506 output?

YES : Refer to GROUP 13A, Diagnostic Trouble Code Chart P.13A-41.

NO : Go to Step 2.

STEP 2. Check the throttle body. (throttle valve area)

Q: Is the throttle valve area dirty?

YES : Perform cleaning. Refer to GROUP 13A, On-vehicle Service –Throttle body (throttle valve area) cleaning P.13A-862. Then go to Step 14.

NO : Go to Step 3.

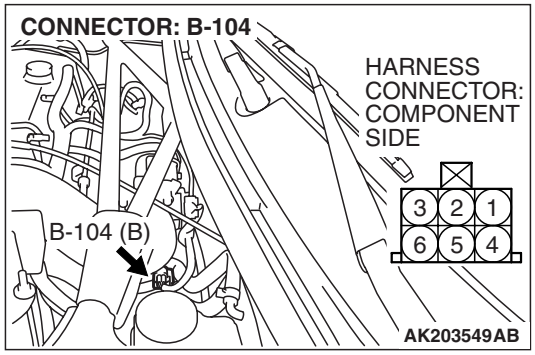

STEP 3. Check harness connector B-104 at idle air control motor for damage.

Q: Is the harness connector in good condition?

YES : Go to Step 4.

NO : Repair or replace it. Refer to GROUP 00E, Harness Connector Inspection P.00E-2. Then go to Step 14.

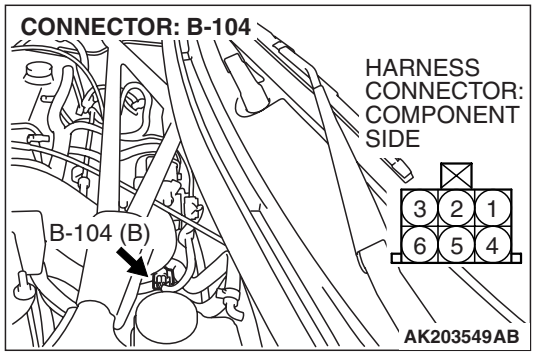

STEP 4. Measure the idle air control motor coil resistance.

(1) Disconnect the idle air control motor connector B-104.

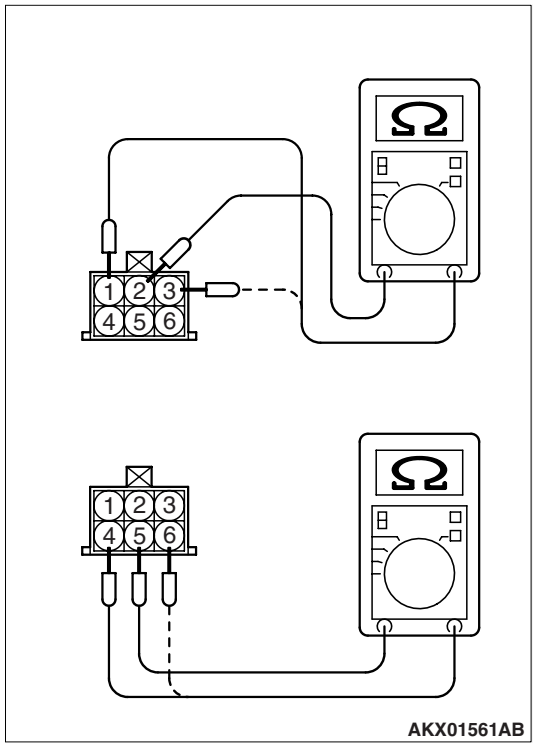

(2) Measure the resistance between idle air control motor connector terminal No. 2 and either terminal No. 1 or terminal No. 3.

Standard value: 28 – 33 ohms [at 20° C (68° F)]

(3) Measure the resistance between idle air control motor connector terminal No. 5 and either terminal No. 4 or terminal No. 6.

Standard value: 28 – 33 ohms [at 20° C (68° F)]

Q: Is the measured resistance between 28 and 33 ohms [at 20° C (68° F)]?

YES : Go to Step 5.

NO : Replace the idle air control motor. Then go to Step 14.

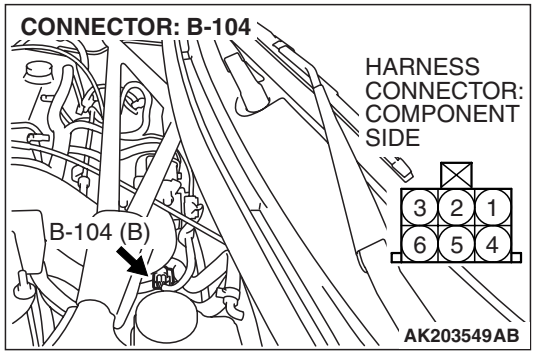

STEP 5. Measure the power supply voltage at idle air control motor harness side connector B-104.

(1) Disconnect connector B-104 and measure at the harness side.

(2) Turn the ignition switch to the "ON" position.

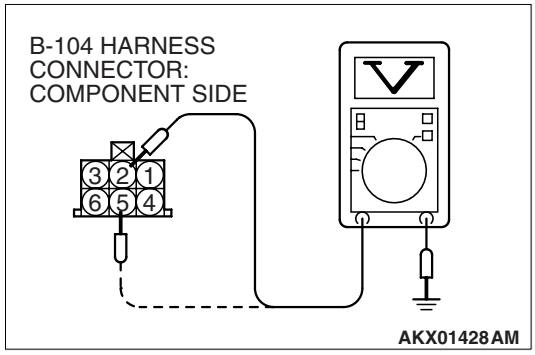

(3) Measure the voltage between terminals No. 2, No. 5 and ground.
- Voltage should be battery positive voltage.

(4) Turn the ignition switch to the "LOCK" (OFF) position.

Q: Is battery positive voltage (approximately 12 volts) present?

YES : Go to Step 7.

NO : Go to Step 6.

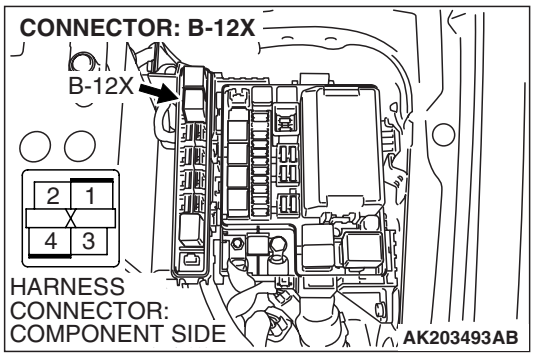

STEP 6. Check harness connector B-12X at MFI relay for damage.

Q: Is the harness connector in good condition?

YES : Repair harness wire between MFI relay connector B-12X (terminal No. 4) and idle air control motor connector B-104 (terminals No. 2, No. 5) because of open circuit or short circuit to ground. Then go to Step 14.

NO : Repair or replace it. Refer to GROUP 00E, Harness Connector Inspection P.00E-2. Then go to Step 14.

STEP 7. Measure the power supply voltage at ECM connector C-121 by backprobing.

(1) Do not disconnect connector C-121.

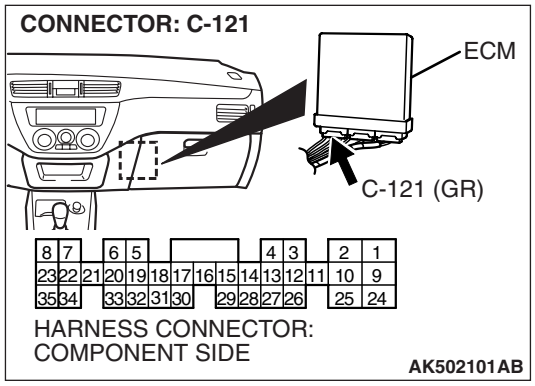

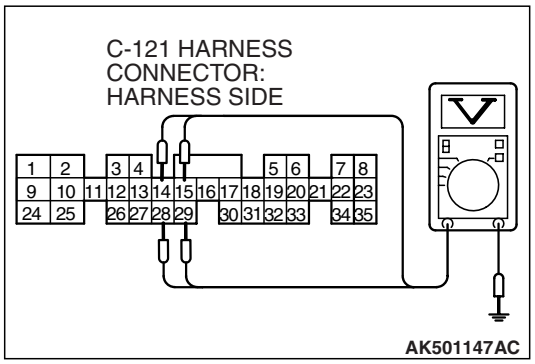

(2) Measure the voltage between terminals (No. 14, No. 15, No. 28, No. 29) and ground by backprobing.
- The voltage is 1volt or lower for approximately 3 seconds, then changes to the battery positive voltage when the Ignition switch is turned from the "LOCK" (OFF) position to the "ON" position.

(3) Turn the ignition switch to the "LOCK" (OFF) position.

Q: Is the measured voltage within the specified range?

YES : Go to Step 10.
NO : Go to Step 8.

STEP 8. Check harness connector C-121 at ECM for damage.

Q: Is the harness connector in good condition?

YES : Go to Step 9.
NO : Repair or replace it. Refer to GROUP 00E, Harness Connector Inspection P.00E-2. Then go to Step 14.

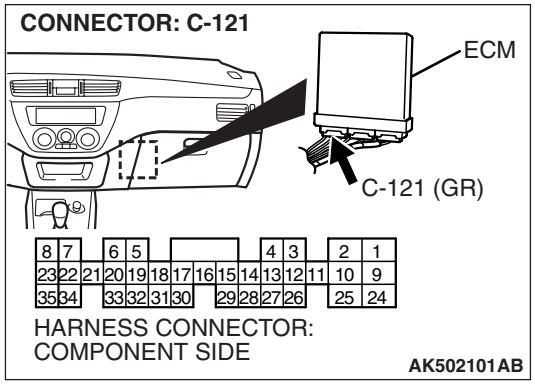

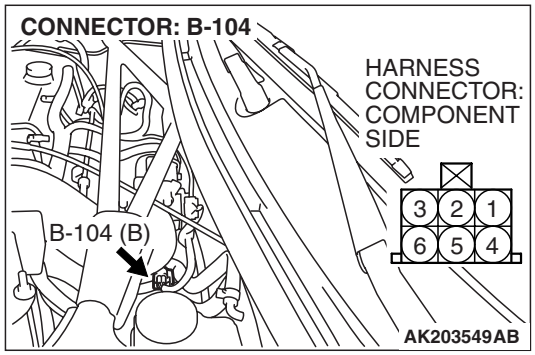

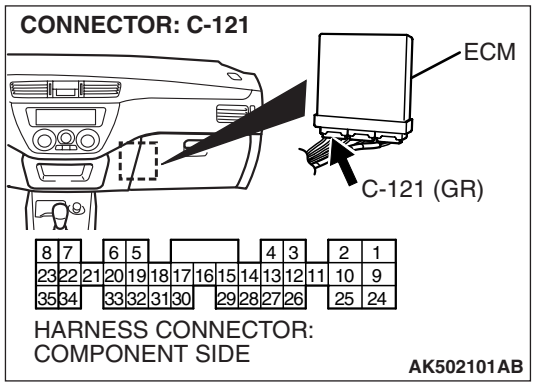

STEP 9. Check for open circuit and short circuit to ground between idle air control motor connector B-104 and ECM connector C-121.

a. Idle air control motor connector B-104 (terminal No. 1) and ECM connector C-121 (terminal No. 14).
b. Idle air control motor connector B-104 (terminal No. 3) and ECM connector C-121 (terminal No. 28).
c. Idle air control motor connector B-104 (terminal No. 4) and ECM connector C-121 (terminal No. 15).
d. Idle air control motor connector B-104 (terminal No. 6) and ECM connector C-121 (terminal No. 29).

Q: Is the harness wire in good condition?

YES : Replace the ECM. Then go to Step 14.
NO : Repair it. Then go to Step 14.

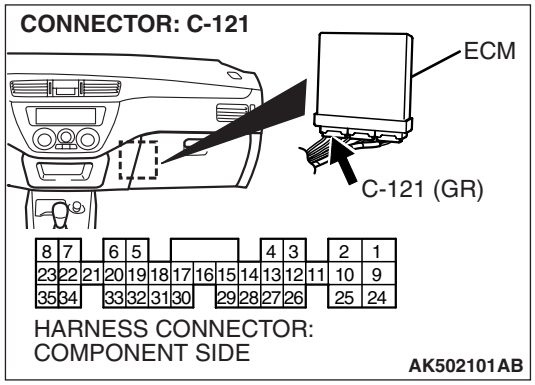

STEP 10. Check harness connector C-121 at ECM for damage.

Q: Is the harness connector in good condition?

YES : Go to Step 11.
NO : Repair or replace it. Refer to GROUP 00E, Harness Connector Inspection P.00E-2. Then go to Step 14.

STEP 11. Check the idle air control motor operation using special tool MB991709.

(1) Remove the idle air control motor.

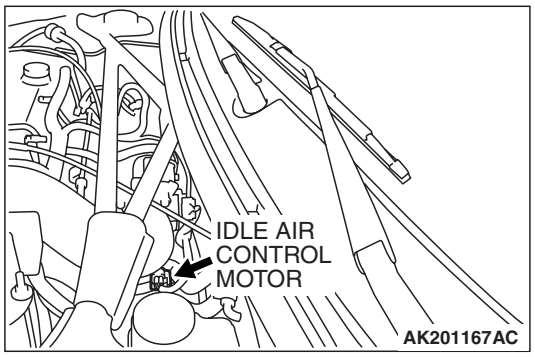

(2) Connect special tool MB991709 to the idle air control motor. (All terminals should be connected.)
(3) Use the jumper wires to connect terminal No. 2 of the idle air control motor connector to the positive battery terminal.

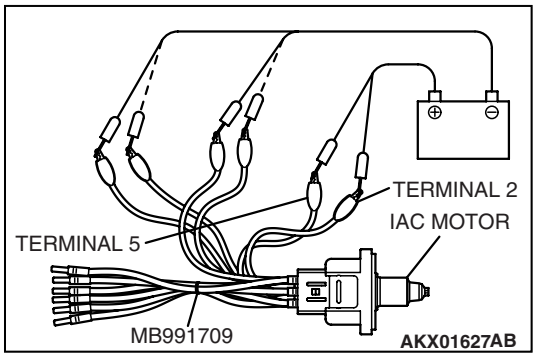

(4) Check the ensure that the motor operates when the terminals No. 1 and No. 3 of the idle air control motor connector are respectively connected to the negative battery terminal using a jumper wire.
   - Vibration should be present at each application of voltage to test clip combination.
(5) Then. Use jumper wires to connect the terminal No. 5 of the idle air control motor connector to the positive battery terminal.
(6) Check the ensure that the motor operates when the terminals No. 4 and No. 6 of the idle air control motor connector are respectively connected to the negative battery terminal using a jumper wire.
   - Vibration should be present at each application of voltage to test clip combination.
(7) Install the idle air control motor. Refer to GROUP 13A, Throttle Body Assembly –Disassembly and Assembly P.13A-884.

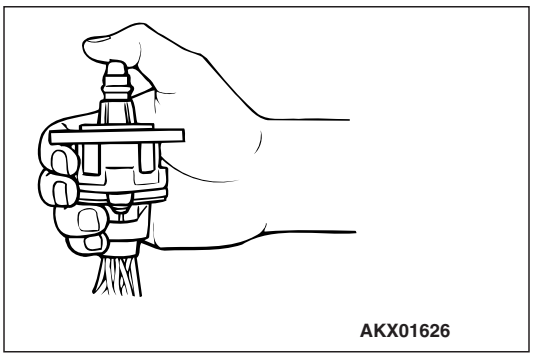

Q: Is the idle air control motor operating properly?

YES : Go to Step 12.
NO : Replace the idle air control motor. Then go to Step 14.

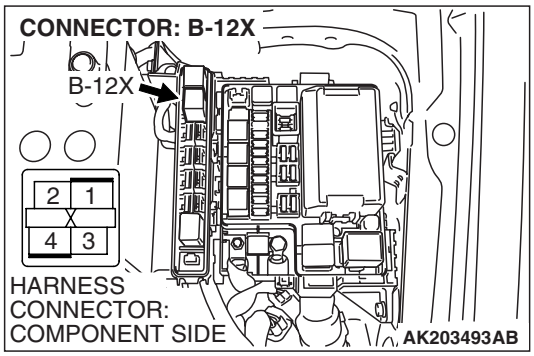

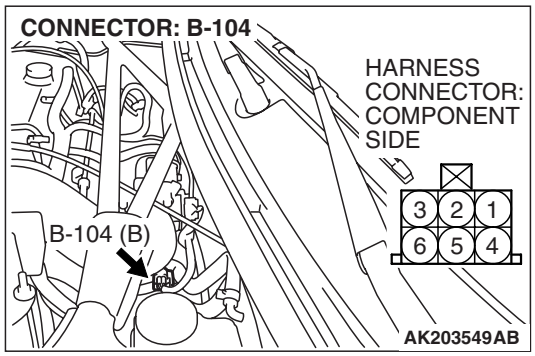

STEP 12. Check for harness damage between MFI relay connector B-12X (terminal No. 4) and idle air control motor connector B-104 (terminals No. 2, No. 5).

Q: Is the harness wire in good condition?

YES : Go to Step 13.

NO : Repair it. Then go to Step 14.

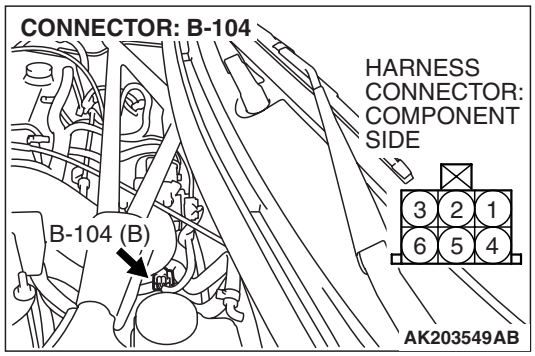

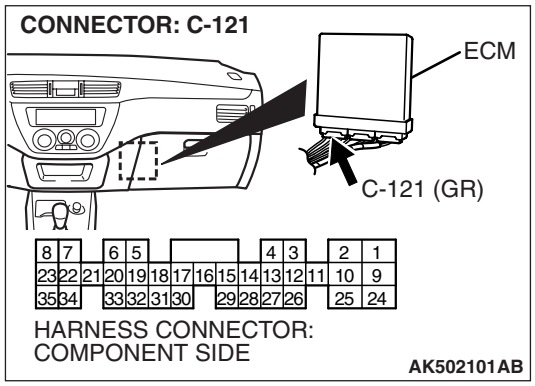

STEP 13. Check for harness damage between idle air control motor connector B-104 and ECM connector C-121.

a. Idle air control motor connector B-104 (terminal No. 1) and ECM connector C-121 (terminal No. 14).
b. Idle air control motor connector B-104 (terminal No. 3) and ECM connector C-121 (terminal No. 28).
c. Idle air control motor connector B-104 (terminal No. 4) and ECM connector C-121 (terminal No. 15).
d. Idle air control motor connector B-104 (terminal No. 6) and ECM connector C-121 (terminal No. 28).

Q: Is the harness wire in good condition?

YES : Replace the ECM. Then go to Step 14.

NO : Repair it. Then go to Step 14.

STEP 14. Test the OBD-II drive cycle.

(1) Carry out a test drive with the drive cycle pattern. Refer to GROUP 13A, Diagnostic Function –OBD-II Drive Cycle – Pattern 18 P.13A-12.

(2) Check the diagnostic trouble code (DTC).

Q: Is DTC P0506 set?

YES : Retry the troubleshooting.

NO : The inspection is complete.

DTC P0507: Idle Control System RPM Higher Than Expected

Idle Air Control (IAC) Motor Circuit

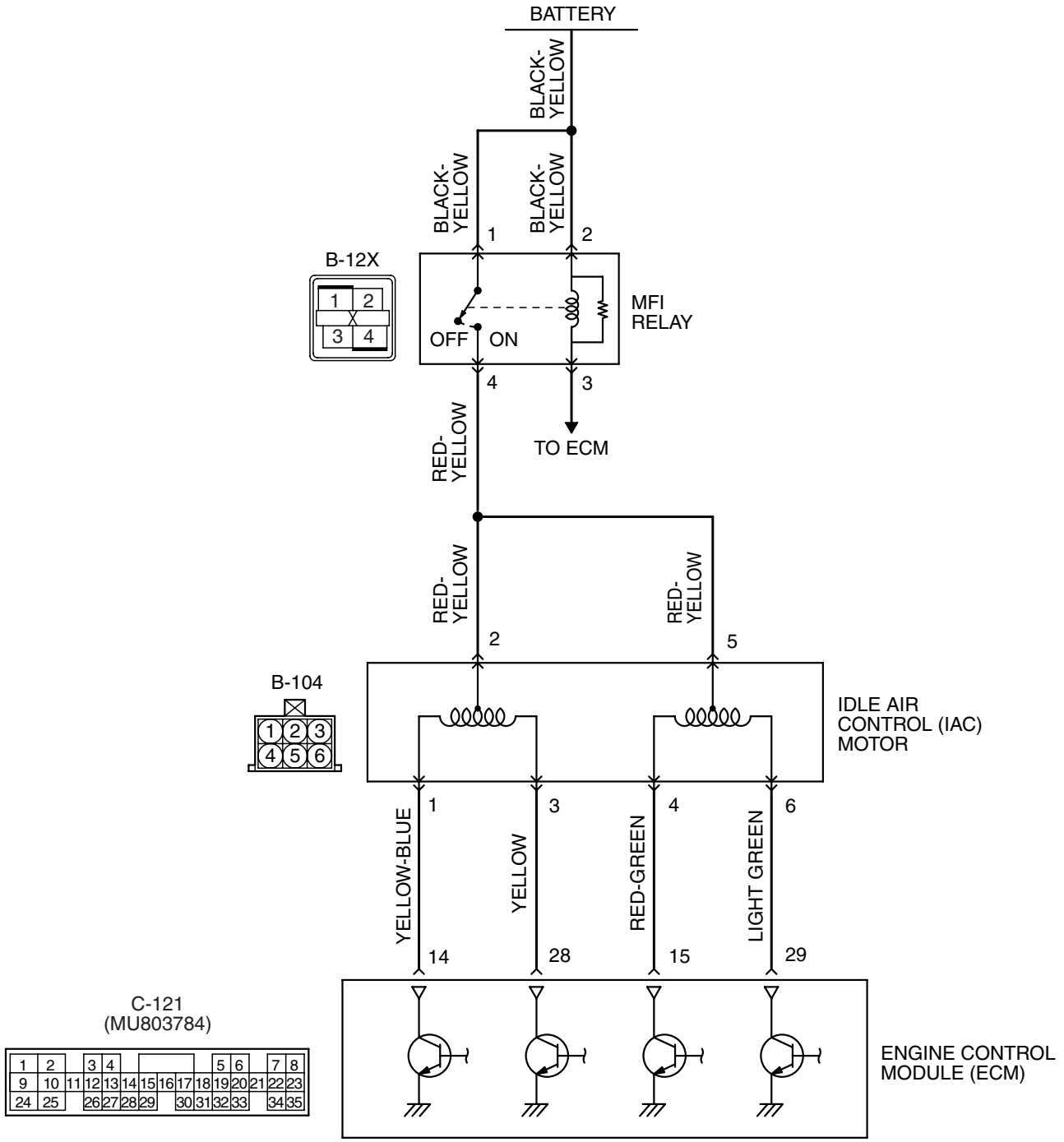

TSB Revision

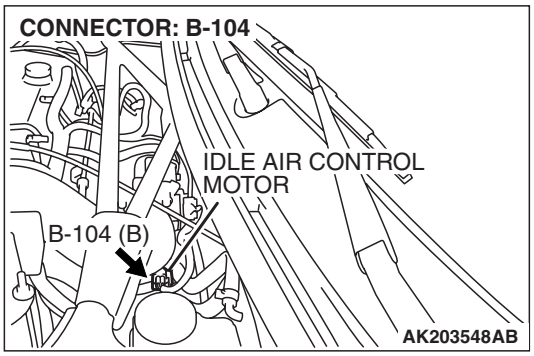

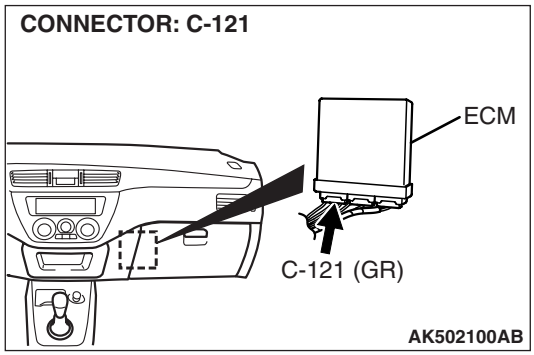

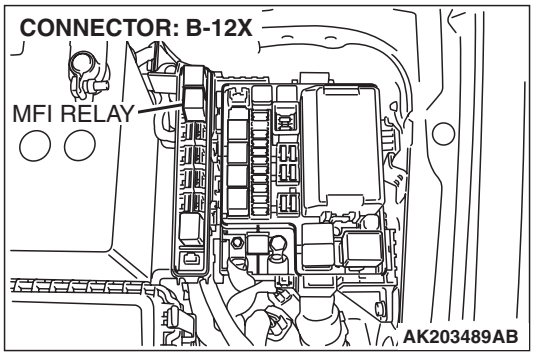

CIRCUIT OPERATION

- The idle air control motor power is supplied from the MFI relay (terminal No. 4).
- The ECM (terminals No. 14, No. 15, No. 28, No. 29) drives the stepper motor by sequentially turning "ON" the power transistors in the ECM and providing ground to the idle air control motor (terminals No. 1, No. 3, No. 4, No. 6).

TECHNICAL DESCRIPTION

- The amount of air taken in during idling is regulated by the opening and closing of the servo valve located in the air passage that bypasses the throttle body.
- If there is a malfunction of the IAC system, the actual engine speed will not be identical to the target engine speed.
- The ECM checks the difference between the actual engine speed and the target engine speed.

DESCRIPTIONS OF MONITOR METHODS

- Difference between actual and target idle speed is over the specified value.

MONITOR EXECUTION

- Continuous

MONITOR EXECUTION CONDITIONS (Other monitor and Sensor)

Other Monitor (There is no temporary DTC stored in memory for the item monitored below)

- Misfire monitor
- Exhaust gas recirculation (EGR) system monitor
- Fuel system monitor

Sensor (The sensor below is determined to be normal)

- Volume airflow sensor
- Engine coolant temperature sensor
- Intake air temperature sensor
- Barometric pressure sensor
- Throttle position sensor

DTC SET CONDITIONS

Logic Flow Chart

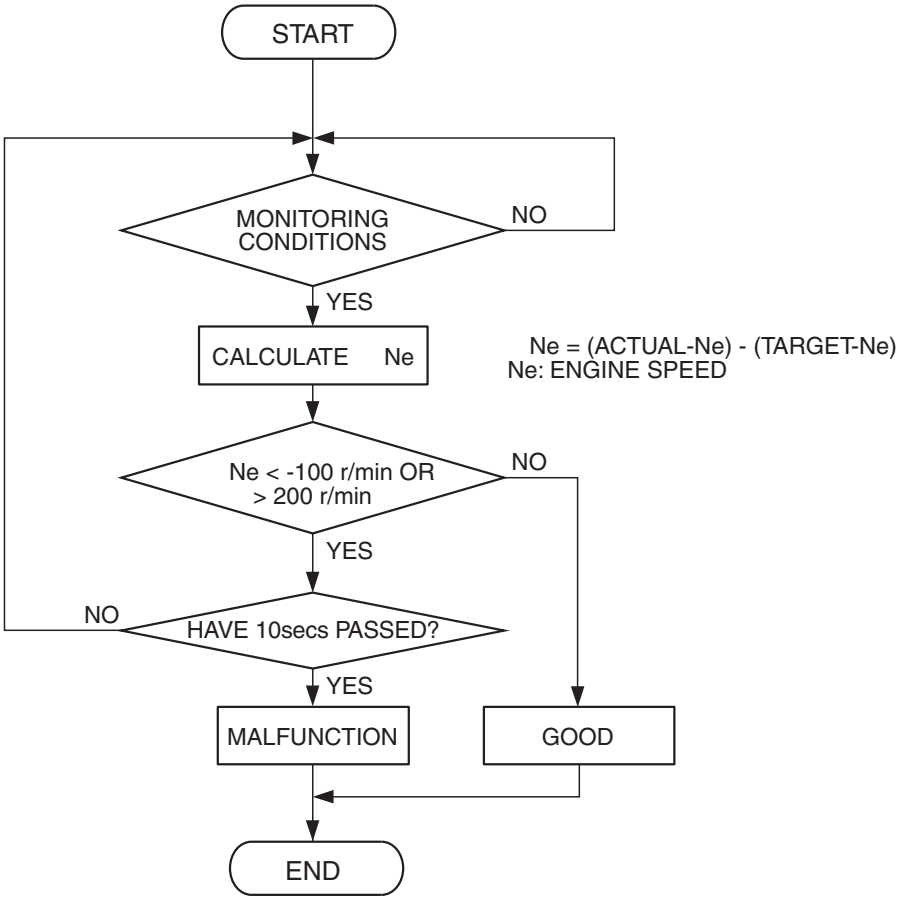

AK204002

Check Conditions

- Vehicle speed has reached 1.5 km/h (1 mph) or more at least once.
- Under the closed loop idle speed control.
- Engine coolant temperature is higher than 77° C (171° F).
- Battery positive voltage is higher than 10 volts.
- Barometric pressure is higher than 76 kPa (22.4 in.Hg).
- Intake air temperature is higher than –10° C (14° F).
- 13 seconds have elapsed from the start of the previous monitoring.
- Target idle air control motor position is 0 steps.

Judgment Criterion

- Actual idle speed has continued to be higher than the target idle speed by 200 r/min (300 r/min*) or more for 12 seconds.

*: Specs in parentheses are applicable if the maximum air temperature during the previous operation was more than 45° C (113° F).

OBD-II DRIVE CYCLE PATTERN

Refer to Diagnostic Function –OBD-II Drive Cycle – Pattern 18 P.13A-12.

TROUBLESHOOTING HINTS (The most likely causes for this code to be set are:)

- Intake system vacuum leak.
- Idle air control motor failed.
- Open or shorted idle air control motor circuit, harness damage, or connector damage.
- ECM failed.

DIAGNOSIS

Required Special Tools:

- MB991958: Scan Tool (M.U.T.-III Sub Assembly)
  - MB991824: V.C.I.
  - MB991827: USB Cable
  - MB991911: Main Harness B
- MB991709: Test Harness Set

STEP 1. Using scan tool MB991958, read the diagnostic trouble code (DTC).

⚠ CAUTION

To prevent damage to scan tool MB991958, always turn the ignition switch to the "LOCK" (OFF) position before connecting or disconnecting scan tool MB991958.

(1) Connect scan tool MB991958 to the data link connector.
(2) Turn the ignition switch to the "ON" position.
(3) Set scan tool MB991958, read the DTC.
(4) Turn the ignition switch to the "LOCK" (OFF) position.

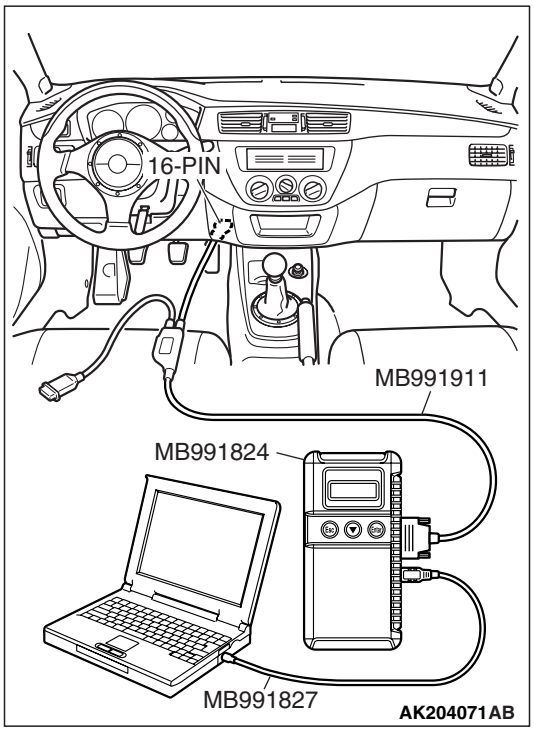

Q: Is the diagnostic trouble code other than P0507 output?

YES : Refer to GROUP 13A, Diagnostic Trouble Code Chart P.13A-41.
NO : Go to Step 2.

STEP 2. Check for intake system vacuum leaks.

Q: Are there any abnormalities?

YES : Repair or replace it. Then go to Step 14.
NO : Go to Step 3.

STEP 3. Check harness connector B-104 at idle air control motor for damage.

Q: Is the harness connector in good condition?

YES : Go to Step 4.
NO : Repair or replace it. Refer to GROUP 00E, Harness Connector Inspection P.00E-2. Then go to Step 14.

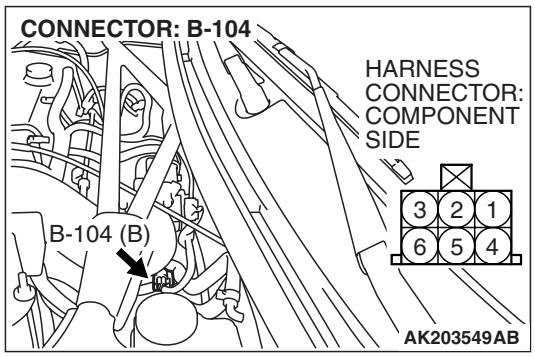

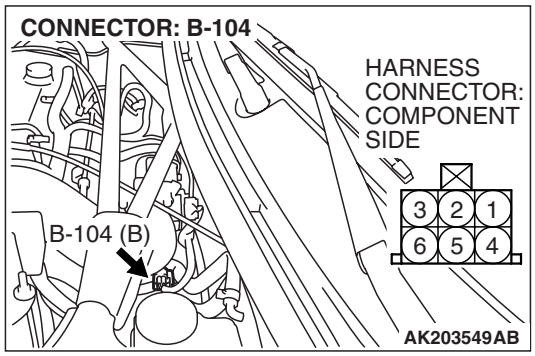

STEP 4. Measure the idle air control motor coil resistance.

(1) Disconnect the idle air control motor connector B-104.

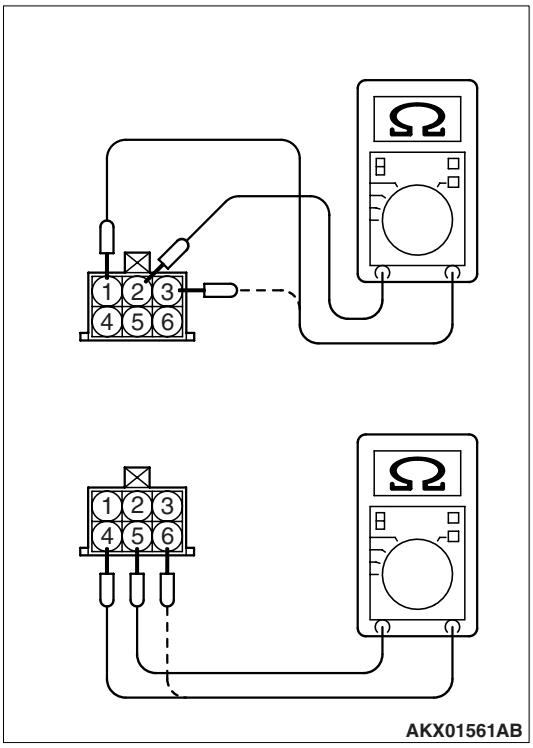

(2) Measure the resistance between idle air control motor connector terminal No. 2 and either terminal No. 1 or terminal No. 3.

Standard value: 28 – 33 ohms [at 20° C (68° F)]

(3) Measure the resistance between idle air control motor connector terminal No. 5 and either terminal No. 4 or terminal No. 6.

Standard value: 28 – 33 ohms [at 20° C (68° F)]

Q: Is the measured resistance between 28 and 33 ohms [at 20° C (68° F)]?

YES : Go to Step 5.

NO : Replace the idle air control motor. Then go to Step 14.

STEP 5. Measure the power supply voltage at idle air control motor harness side connector B-104.

(1) Disconnect connector B-104 and measure at the harness side.

(2) Turn the ignition switch to the "ON" position.

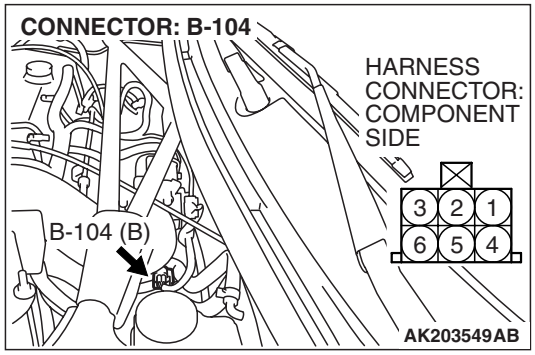

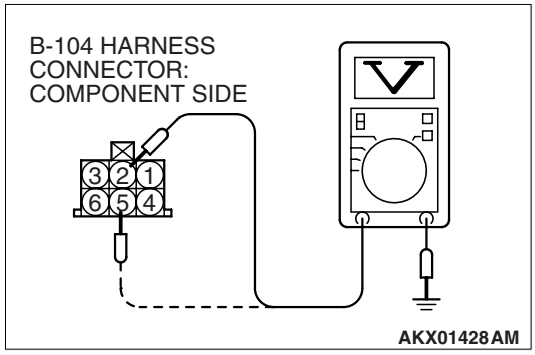

(3) Measure the voltage between terminals No. 2, No. 5 and ground.
- Voltage should be battery positive voltage.

(4) Turn the ignition switch to the "LOCK" (OFF) position.

Q: Is battery positive voltage (approximately 12 volts) present?

YES : Go to Step 7.

NO : Go to Step 6.

STEP 6. Check harness connector B-12X at MFI relay for damage.

Q: Is the harness connector in good condition?

YES : Repair harness wire between MFI relay connector B-12X (terminal No. 4) and idle air control motor connector B-104 (terminals No. 2, No. 5) because of open circuit or short circuit to ground. Then go to Step 14.

NO : Repair or replace it. Refer to GROUP 00E, Harness Connector Inspection P.00E-2. Then go to Step 14.

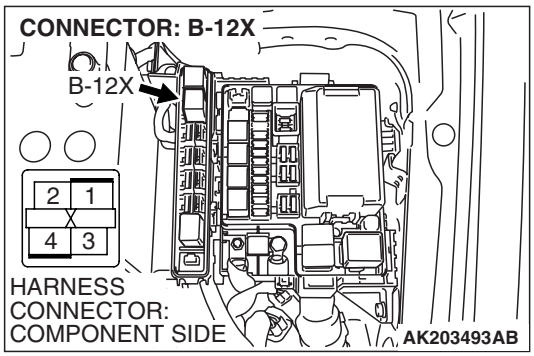

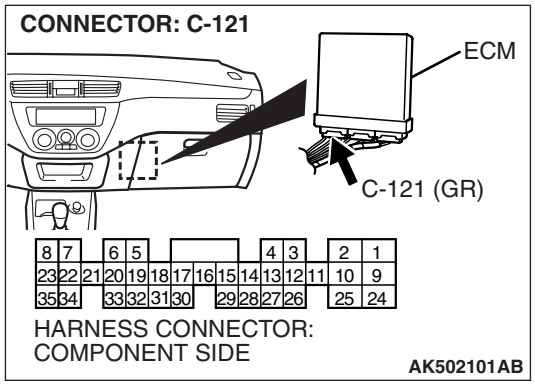

STEP 7. Measure the power supply voltage at ECM connector C-121 by backprobing.

(1) Do not disconnect connector C-121.

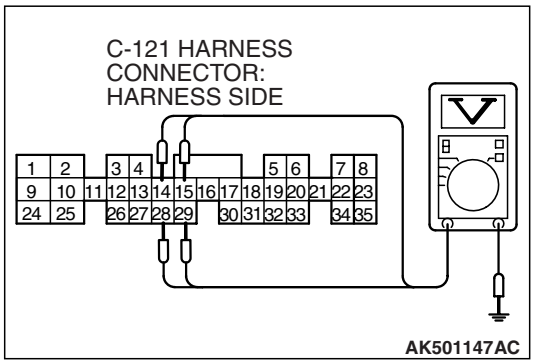

(2) Measure the voltage between terminals (No. 14, No. 15, No. 28, No. 29) and ground by backprobing.
- The voltage is 1 V or lower for approximately 3 seconds, then changes to the battery positive voltage when the Ignition switch is turned from the "LOCK" (OFF) position to the "ON" position.

(3) Turn the ignition switch to the "LOCK" (OFF) position.

Q: Is the measured voltage within the specified range?

YES : Go to Step 10.
NO : Go to Step 8.

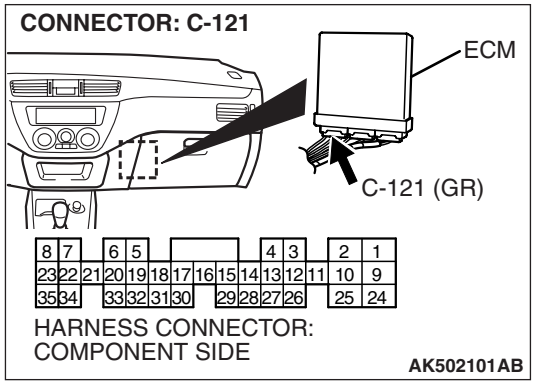

STEP 8. Check harness connector C-121 at ECM for damage.

Q: Is the harness connector in good condition?

YES : Go to Step 9.
NO : Repair or replace it. Refer to GROUP 00E, Harness Connector Inspection P.00E-2. Then go to Step 14.

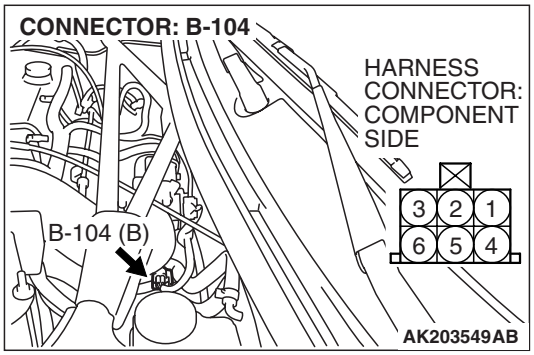

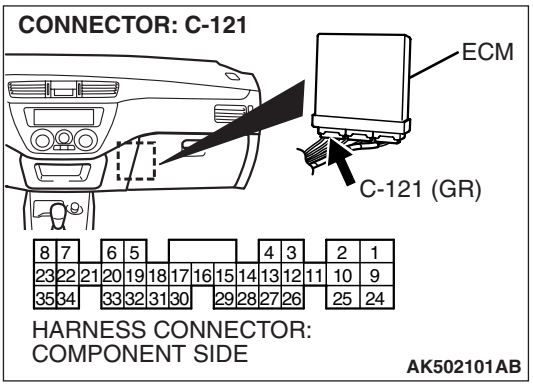

STEP 9. Check for open circuit and short circuit to ground between idle air control motor connector B-104 and ECM connector C-121.

a. Idle air control motor connector B-104 (terminal No. 1) and ECM connector C-121 (terminal No. 14).
b. Idle air control motor connector B-104 (terminal No. 3) and ECM connector C-121 (terminal No. 28).
c. Idle air control motor connector B-104 (terminal No. 4) and ECM connector C-121 (terminal No. 15).
d. Idle air control motor connector B-104 (terminal No. 6) and ECM connector C-121 (terminal No. 29).

Q: Is the harness wire in good condition?

YES : Replace the ECM. Then go to Step 14.
NO : Repair it. Then go to Step 14.

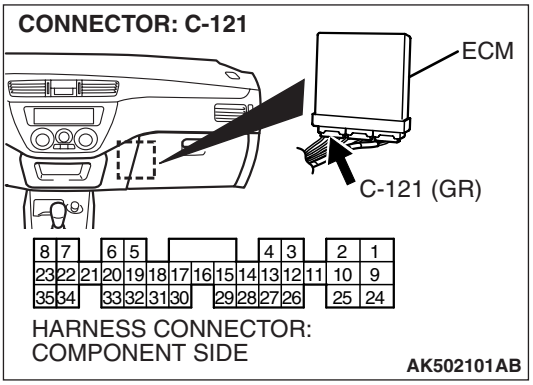

STEP 10. Check harness connector C-121 at ECM for damage.

Q: Is the harness connector in good condition?

YES : Go to Step 11.
NO : Repair or replace it. Refer to GROUP 00E, Harness Connector Inspection P.00E-2. Then go to Step 14.

STEP 11. Check the idle air control motor operation using special tool MB991709.

(1) Remove the idle air control motor.

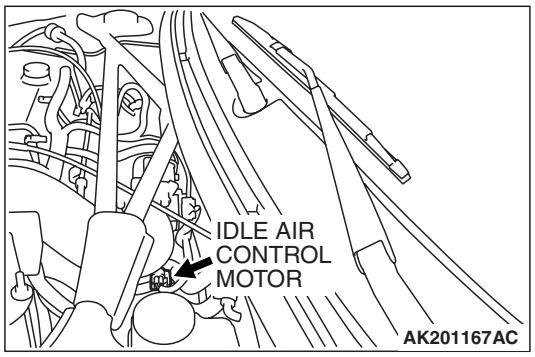

(2) Connect special tool MB991709 to the idle air control motor. (All terminals should be connected.)
(3) Use the jumper wires to connect terminal No. 2 of the idle air control motor connector to the positive battery terminal.

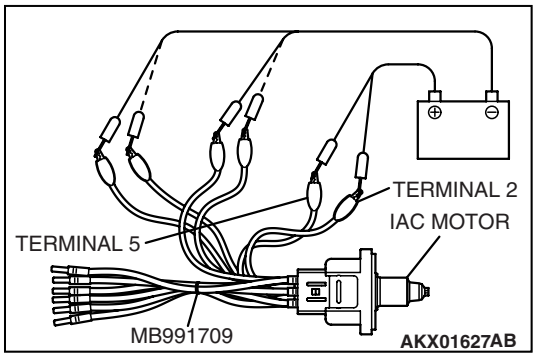

(4) Check the ensure that the motor operates when the terminals No. 1 and No. 3 of the idle air control motor connector are respectively connected to the negative battery terminal using a jumper wire.
   - Vibration should be present at each application of voltage to test clip combination.
(5) Then, use jumper wires to connect the terminal No. 5 of the idle air control motor connector to the positive battery terminal.
(6) Check to ensure that the motor operates when terminals No. 4 and No. 6 of the idle air control motor connector are respectively connected to the negative battery terminal using a jumper wire.
   - Vibration should be present at each application of voltage to test clip combination.
(7) Install the idle air control motor. Refer to GROUP 13A, Throttle Body Assembly –Disassembly and Assembly P.13A-884.

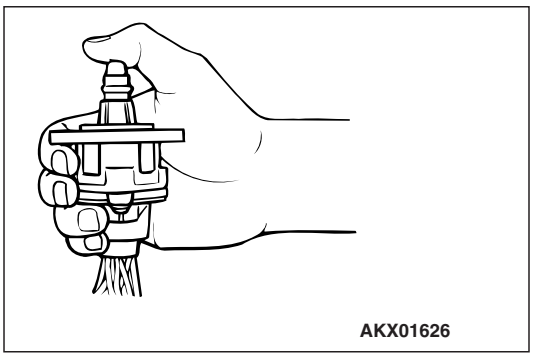

Q: Is the idle air control motor operating properly?

YES : Go to Step 12.
NO : Replace the idle air control motor. Then go to Step 14.

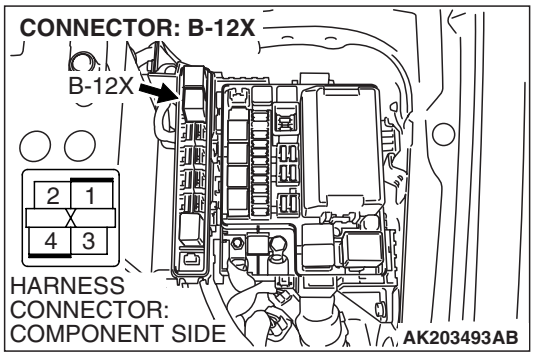

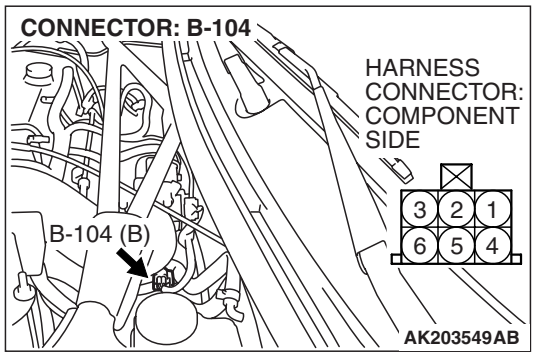

STEP 12. Check for harness damage between MFI relay connector B-12X (terminal No. 4) and idle air control motor connector B-104 (terminals No. 2, No. 5).

Q: Is the harness wire in good condition?

YES : Go to Step 13.

NO : Repair it. Then go to Step 14.

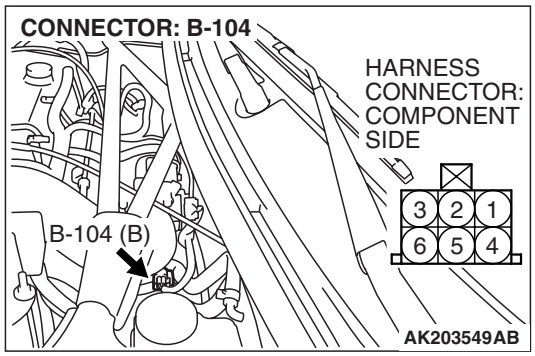

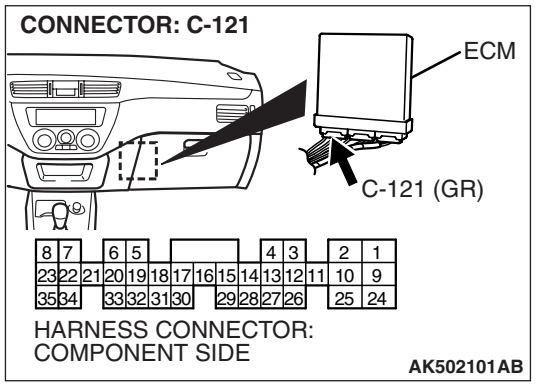

STEP 13. Check for harness damage between idle air control motor connector B-104 and ECM connector C-121.

a. Idle air control motor connector B-104 (terminal No. 1) and ECM connector C-121 (terminal No. 14).
b. Idle air control motor connector B-104 (terminal No. 3) and ECM connector C-121 (terminal No. 28).
c. Idle air control motor connector B-104 (terminal No. 4) and ECM connector C-121 (terminal No. 15).
d. Idle air control motor connector B-104 (terminal No. 6) and ECM connector C-121 (terminal No. 29).

Q: Is the harness wire in good condition?

YES : Replace the ECM. Then go to Step 14.

NO : Repair it. Then go to Step 14.

STEP 14. Test the OBD-II drive cycle.

(1) Carry out a test drive with the drive cycle pattern. Refer to GROUP 13A, Diagnostic Function –OBD-II Drive Cycle – Pattern 18 P.13A-12.

(2) Check the diagnostic trouble code (DTC).

Q: Is DTC P0507 set?

YES : Retry the troubleshooting.

NO : The inspection is complete.

DTC P0513: Immobilizer Malfunction

Immobilizer Circuit

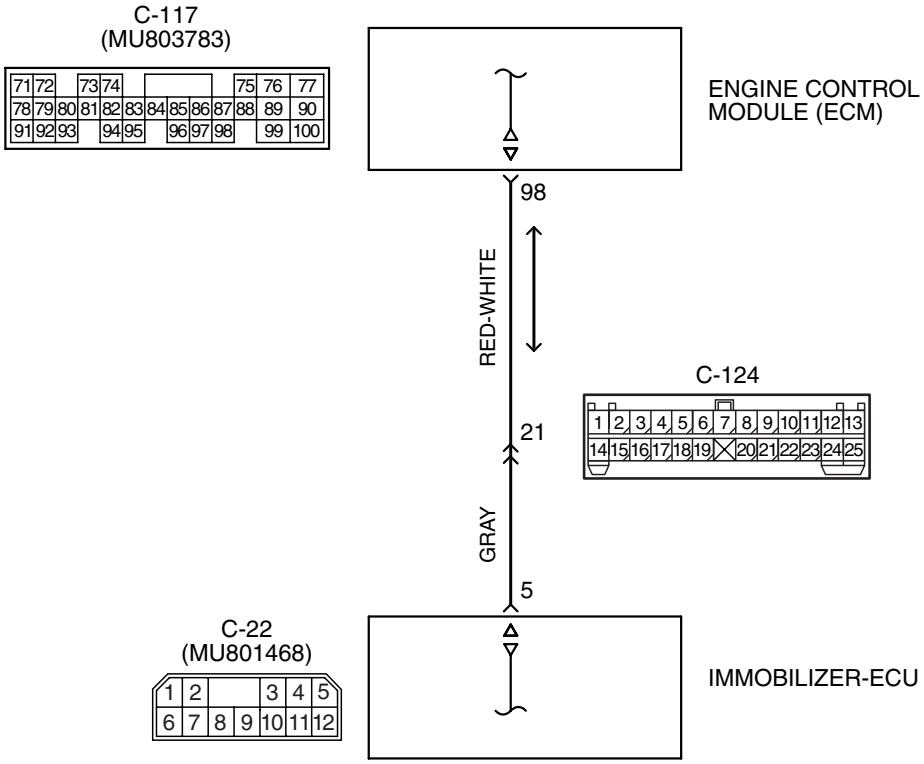

AK502082

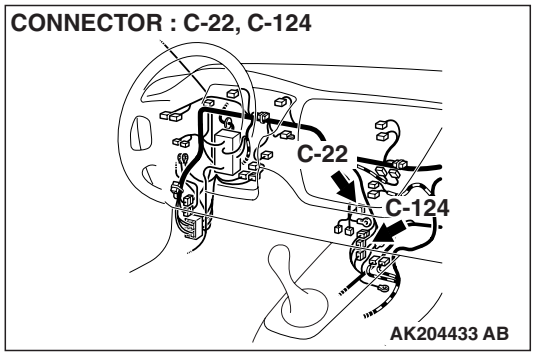

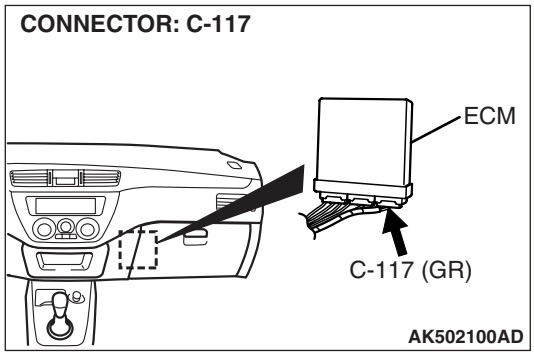

TSB Revision

TECHNICAL DESCRIPTION

- ECM monitors the communication condition with the immobilizer-ECU. When an abnormality in communication is found, ECM prevents engine start.

DTC SET CONDITIONS

Check Condition

- Ignition switch: ON

Judgement Criterion

- When the communication error between ECM and the immobilizer-ECU continues for 2 seconds or more.

TROUBLESHOOTING HINTS (The most likely causes for this code to be set are:)

- Malfunction of harness or connector.
- Malfunction of immobilizer-ECU.
- Malfunction of ECM.

DIAGNOSIS

Required Special Tools:

- MB991958: Scan Tool (M.U.T.-III Sub Assembly)
  - MB991824: V.C.I.
  - MB991827: USB Cable
  - MB991911: Main Harness B

STEP 1. Using scan tool MB991958, read the immobilizer diagnostic trouble code (DTC).

⚠ CAUTION

To prevent damage to scan tool MB991958, always turn the ignition switch to the "LOCK" (OFF) position before connecting or disconnecting scan tool MB991958.

(1) Connect scan tool MB991958 to the data link connector.
(2) Turn the ignition switch to the "ON" position.
(3) Read the immobilizer system-DTC.
(4) Turn the ignition switch to the "LOCK" (OFF) position.

Q: Is the immobilizer system –DTC is output?

YES : Refer to GROUP 54A, Ignition Switch and Immobilizer System –Diagnostic Trouble Code Chart P.54A-11.

NO : Go to Step 2.

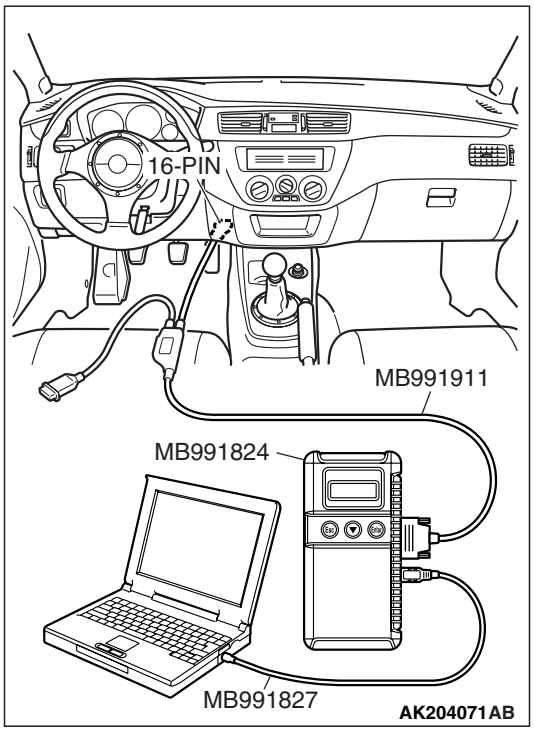

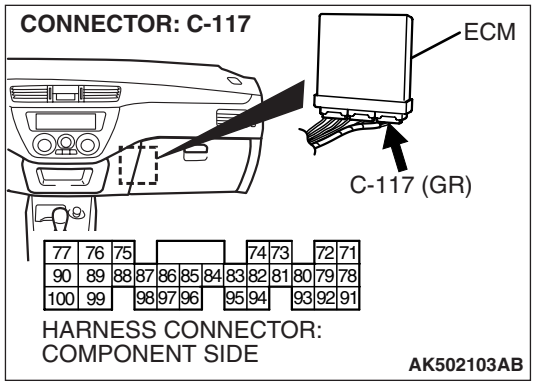

STEP 2. Check harness connector C-117 at ECM for damage.

Q: Is the connector in good condition?

YES : Go to Step 3.

NO : Repair or replace it. Refer to GROUP 00E, Harness Connector Inspection P.00E-2.Then confirm that the malfunction symptom is eliminated.

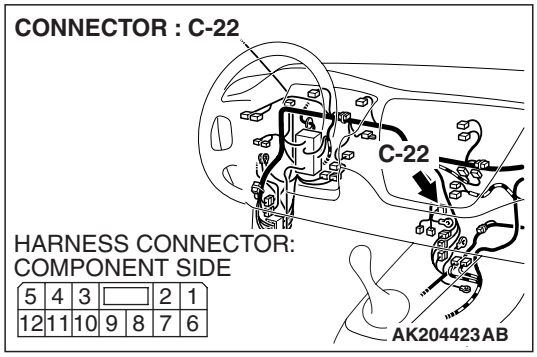

STEP 3. Check harness connector C-22 at immobilizer-ECU for damage.

Q: Is the harness connector in good condition?

YES : Go to Step 4.

NO : Repair or replace it. Refer to GROUP 00E, Harness Connector Inspection P.00E-2.Then confirm that the malfunction symptom is eliminated.

STEP 4. Check for open circuit and short circuit to ground and harness damage between ECM connector C-117 (terminal No. 98) and immobilizer-ECU connector C-22 (terminal No. 5).

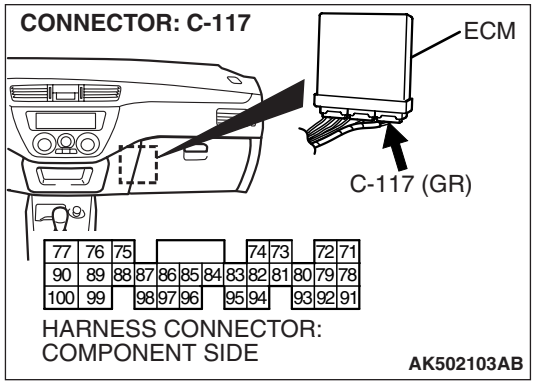

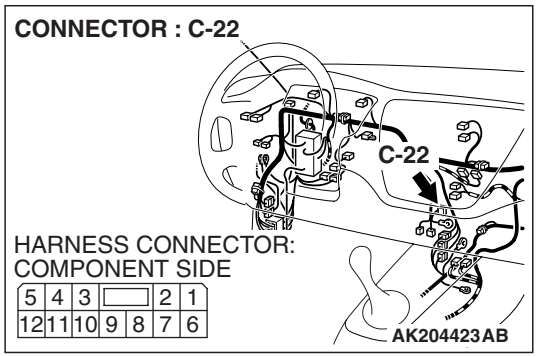

NOTE: Check harness connector after checking intermediate connector C-124. If the intermediate connector is damaged, repair or replace it. Refer to GROUP 00E, Harness Connector Inspection P.00E-2. Then confirm that the malfunction symptom is eliminated.

Q: Is the harness wire in good condition?

YES : If DTC P0513 is output again after the MFI-DTC has been erased, replace the ECM. Then check that the DTC P0513 does not reset.

NO : Repair it. Then confirm that the malfunction symptom is eliminated.

DTC P0551: Power Steering Pressure Sensor Circuit Range/Performance

Power Steering Pressure Switch Circuit

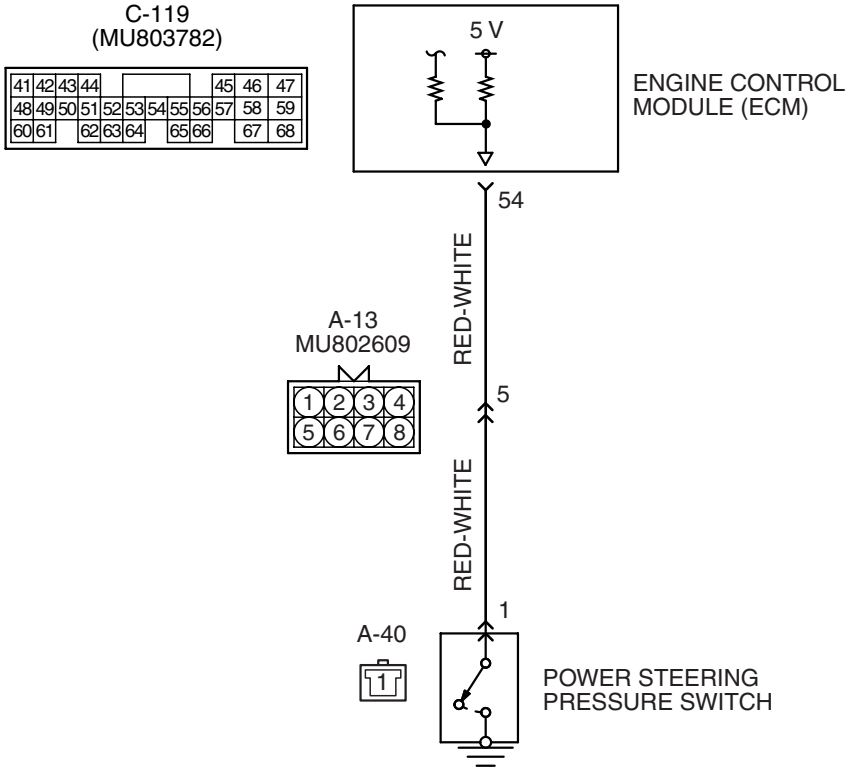

AK502083

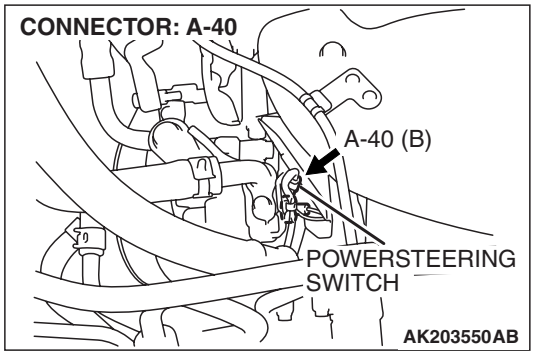

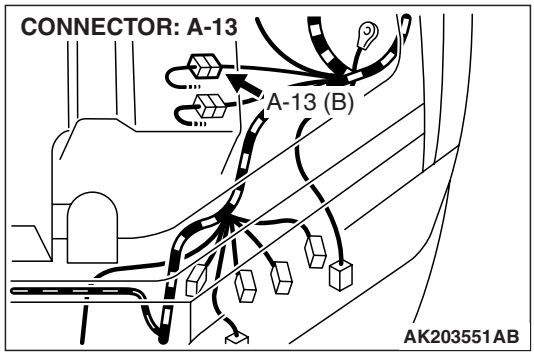

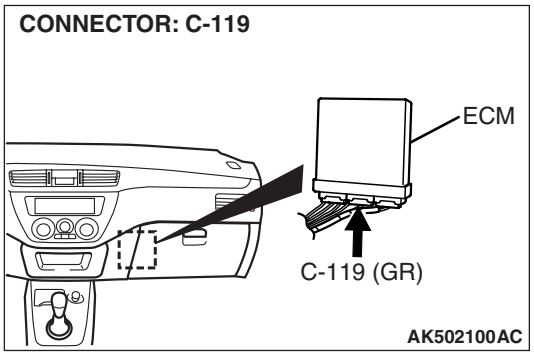

TSB Revision

CIRCUIT OPERATION

- A battery positive voltage is applied to the power steering pressure switch output terminal (terminal No. 1) from the ECM (terminal No. 54) via the resistor in the ECM.

TECHNICAL DESCRIPTION

- The power steering pressure switch converts the existence of a power steering load into a high/low voltage, and inputs it into the ECM.
- When the steering wheel is turned, hydraulic pressure rises. The power steering pressure switch closes, and the applied battery positive voltage will be grounded. With this, the power steering pressure switch output voltage will fluctuate between 0 volt and 12 volts.
- While driving with the steering wheel held straight, the power steering pressure switch turns "OFF".
- The ECM checks whether the power steering pressure switch turns "OFF" or "ON" during driving.

DESCRIPTIONS OF MONITOR METHODS

- Power steering pressure switch stays on during specified go/stop operations.

MONITOR EXECUTION

- Continuous

MONITOR EXECUTION CONDITIONS (Other monitor and Sensor)

Other Monitor (There is no temporary DTC stored in memory for the item monitored below)

- Not applicable

Sensor (The sensor below is determined to be normal)

- Engine coolant temperature sensor

DTC SET CONDITIONS

Logic Flow Chart

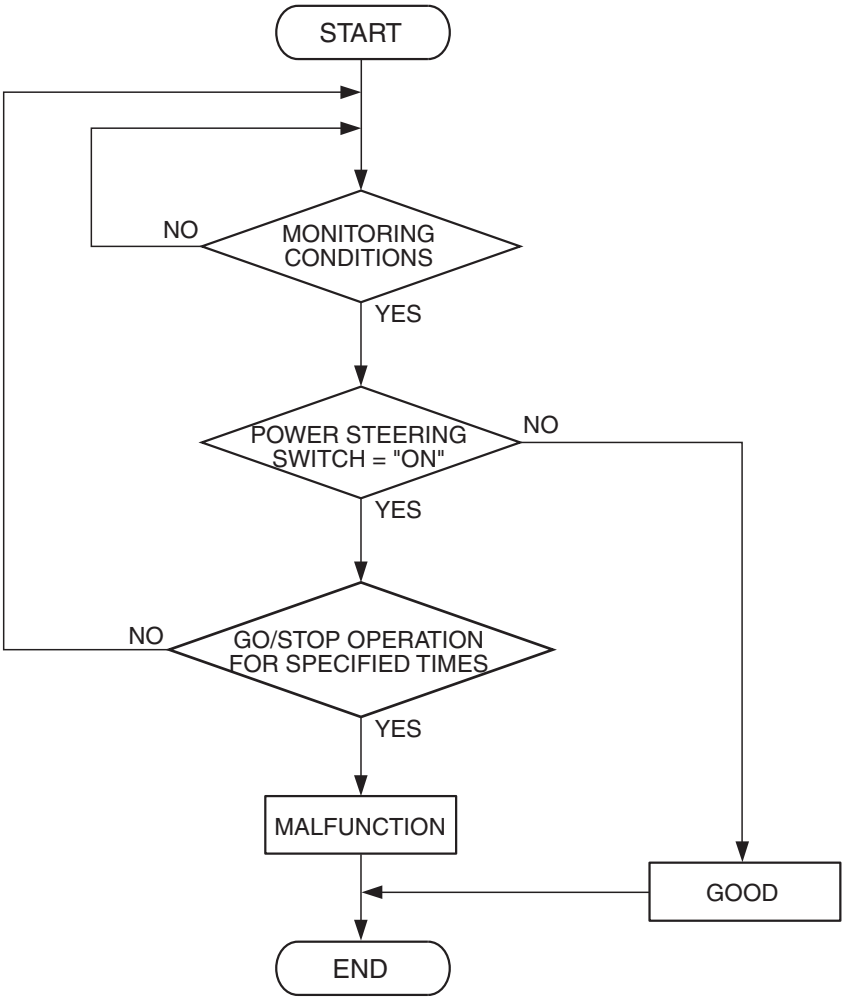

AK305583

Check Conditions

- Engine coolant temperature is higher than 62° C (144° F).
- Drive for 4 seconds or more with the vehicle speed is 50 km/h (31 mph) or more. Stop the vehicle [vehicle speed is 1.5 km/h (1 mph) or less]. Repeat 10 times or more.

Judgment Criterion

- Power steering pressure switch continues to be "ON".

OBD-II DRIVE CYCLE PATTERN

None.

TROUBLESHOOTING HINTS (The most likely causes for this code to be set are:)

- Power steering pressure switch failed.
- Open or shorted power steering pressure switch circuit, harness damage, or connector damage.
- ECM failed.

DIAGNOSIS

Required Special Tools:

- MB991958: Scan Tool (M.U.T.-III Sub Assembly)
  - MB991824: V.C.I.
  - MB991827: USB Cable
  - MB991911: Main Harness B

STEP 1. Using scan tool MB991958, check data list item 27: Power Steering Pressure Switch.

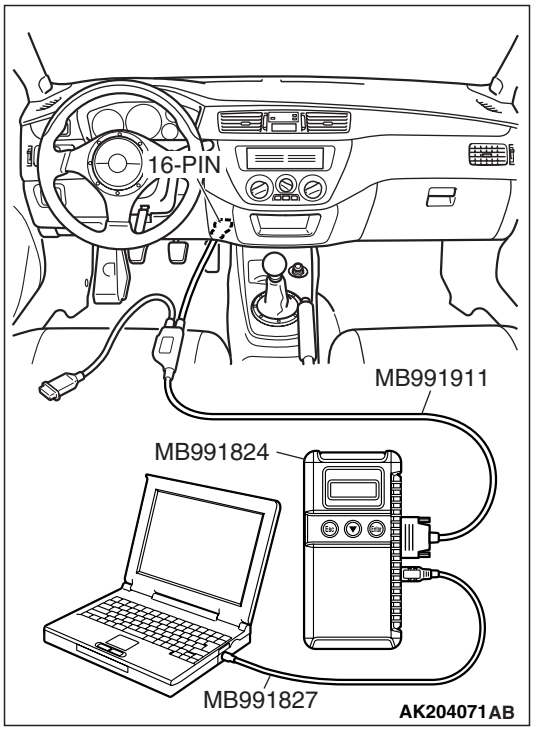

⚠ CAUTION

To prevent damage to scan tool MB991958, always turn the ignition switch to the "LOCK" (OFF) position before connecting or disconnecting scan tool MB991958.

(1) Connect scan tool MB991958 to the data link connector.
(2) Start the engine and run at idle.
(3) Set scan tool MB991958 to the data reading mode for item 27, Power Steering Pressure Switch.
  - If the steering wheel is stopped while idling, "OFF" will be displayed.
  - If the steering wheel is steered while idling, "ON" will be displayed.
(4) Turn the ignition switch to the "LOCK" (OFF) position.

Q: Is the sensor operating properly?

YES : It can be assumed that this malfunction is intermittent. Refer to GROUP 00, How to Use Troubleshooting/Inspection Service Points –How to Cope with Intermittent Malfunctions P.00-13.

NO : Go to Step 2.

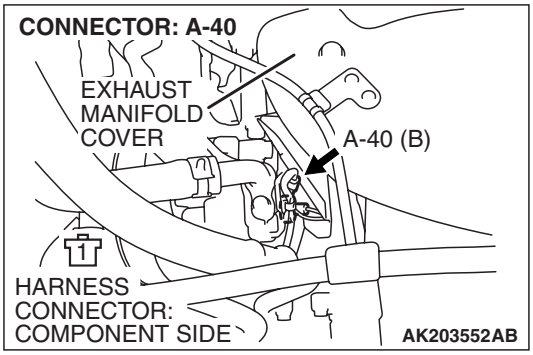

STEP 2. Measure the power supply voltage at power steering pressure switch connector A-40 by backprobing.

(1) Do not disconnect connector A-40.
(2) Start the engine and run at idle.

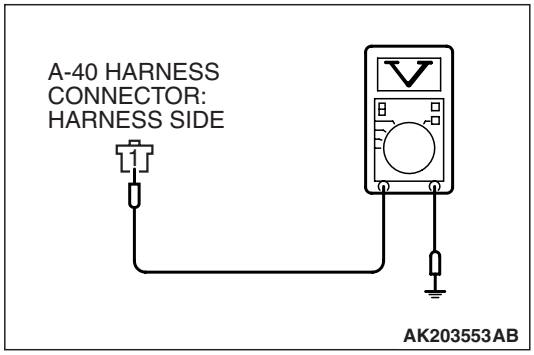

(3) Measure the voltage between terminal No. 1 and ground by backprobing.
- When steering wheel is stationary, voltage should be battery positive voltage.
- When steering wheel is turned, voltage should be 1 volt or less.

(4) Turn the ignition switch to the "LOCK" (OFF) position.

Q: Is the measured voltage within the specified range?

YES : Go to Step 3.
NO : Go to Step 5.

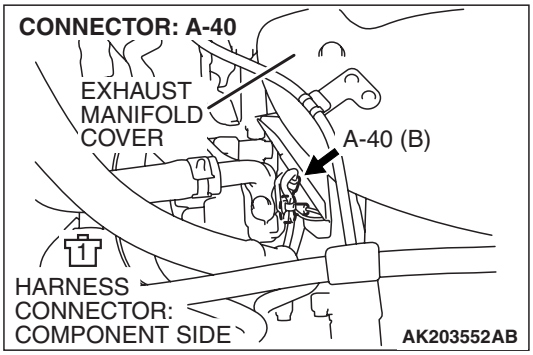

STEP 3. Check harness connector A-40 at power steering pressure switch for damage.

Q: Is the harness connector in good condition?

YES : Go to Step 4.
NO : Repair or replace it. Refer to GROUP 00E, Harness Connector Inspection P.00E-2. Then go to Step 14.

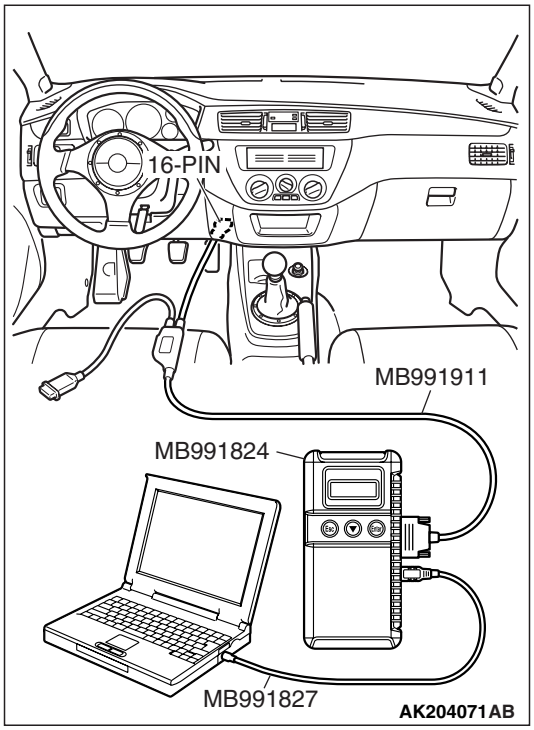

STEP 4. Using scan tool MB991958, check data list item 27: Power Steering Pressure Switch.

⚠ CAUTION

To prevent damage to scan tool MB991958, always turn the ignition switch to the "LOCK" (OFF) position before connecting or disconnecting scan tool MB991958.

(1) Connect scan tool MB991958 to the data link connector.
(2) Start the engine and run at idle.
(3) Set scan tool MB991958 to the data reading mode for item 27, Power Steering Pressure Switch.
- If the steering wheel is stopped while idling, "OFF" will be displayed.
- If the steering wheel is steered while idling, "ON" will be displayed.

(4) Turn the ignition switch to the "LOCK" (OFF) position.

Q: Is the sensor operating properly?

YES : It can be assumed that this malfunction is intermittent. Refer to GROUP 00, How to Use Troubleshooting/Inspection Service Points –How to Cope with Intermittent Malfunctions P.00-13.

NO : Replace the ECM. Then go to Step 14.

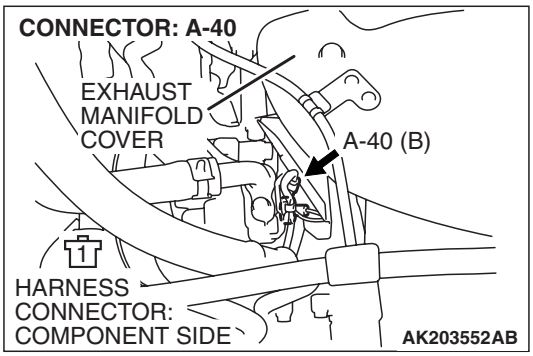

STEP 5. Check harness connector A-40 at power steering pressure switch for damage.

Q: Is the harness connector in good condition?

YES : Go to Step 6.

NO : Repair or replace it. Refer to GROUP 00E, Harness Connector Inspection P.00E-2. Then go to Step 14.

STEP 6. Measure the power supply voltage at power steering pressure switch harness side connector A-40.

(1) Disconnect connector A-40 and measure at the harness side.
(2) Turn the ignition switch to the "ON" position.

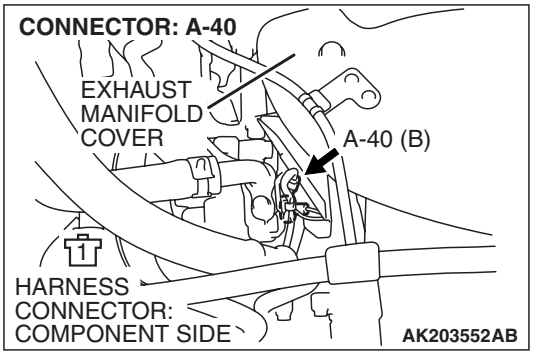

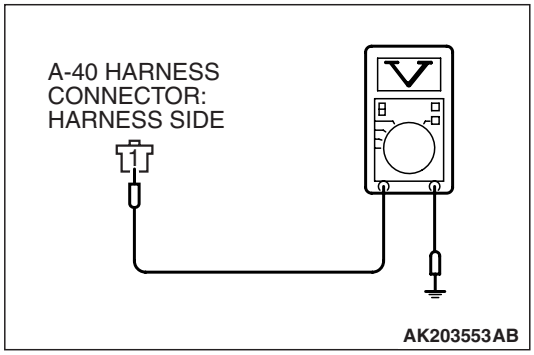

(3) Measure the voltage between terminal No. 1 and ground.
- Voltage should be battery positive voltage.

(4) Turn the ignition switch to the "LOCK" (OFF) position.

Q: Is battery positive voltage (approximately 12 volts) present?

YES : Go to Step 11.
NO : Go to Step 7.

STEP 7. Measure the power supply voltage at ECM connector C-119 by backprobing.

(1) Do not disconnect the ECM connector C-119.
(2) Disconnect the power steering pressure switch connector B-116.
(3) Turn the ignition switch to the "ON" position.

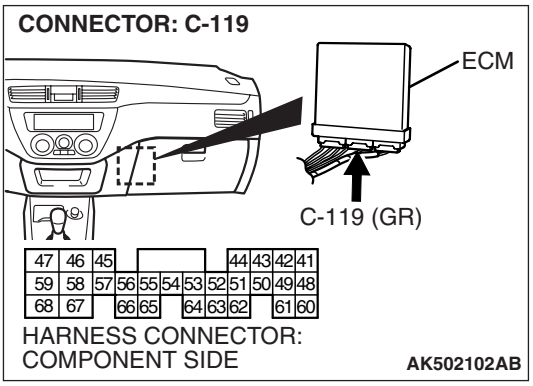

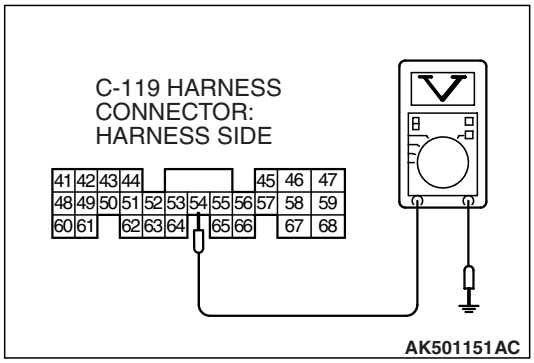

(4) Measure the voltage between terminal No. 54 and ground by backprobing.
- Voltage should be between battery positive voltage.

(5) Turn the ignition switch to the "LOCK" (OFF) position.

Q: Is battery positive voltage (approximately 12 volts) present?

YES : Go to Step 8.
NO : Go to Step 9.

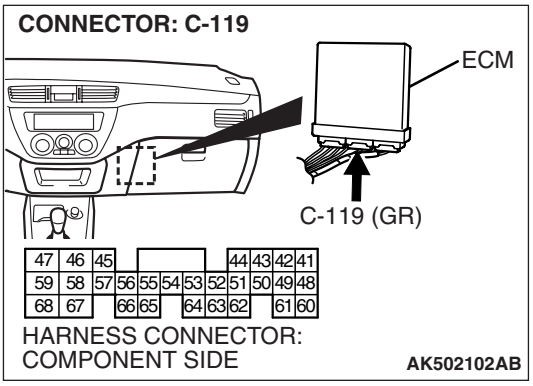

STEP 8. Check harness connector C-119 at ECM for damage.

Q: Is the harness connector in good condition?

YES : Check harness connector A-13 at the intermediate connector for damage, and repair or replace as required. Refer to GROUP 00E, Harness Connector Inspection P.00E-2. If the intermediate connector is in good condition, repair the harness wire between power steering pressure switch connector A-40 (terminal No. 1) and ECM connector C-119 (terminal No. 54) because of open circuit. Then go to Step 14.

NO : Repair or replace it. Refer to GROUP 00E, Harness Connector Inspection P.00E-2. Then go to Step 14.

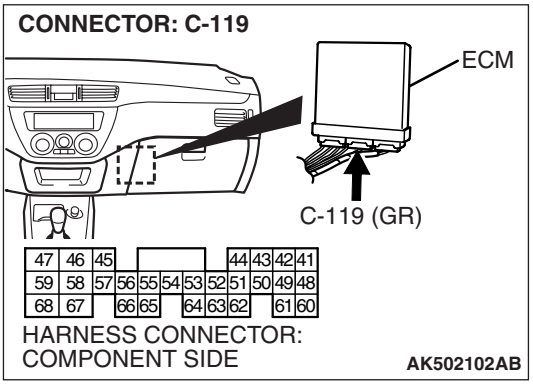

STEP 9. Check harness connector C-119 at ECM for damage.

Q: Is the harness connector in good condition?

YES : Go to Step 10.

NO : Repair or replace it. Refer to GROUP 00E, Harness Connector Inspection P.00E-2. Then go to Step 14.

STEP 10. Check for short circuit to ground between power steering pressure switch connector A-40 (terminal No. 1) and ECM connector C-119 (terminal No. 54).

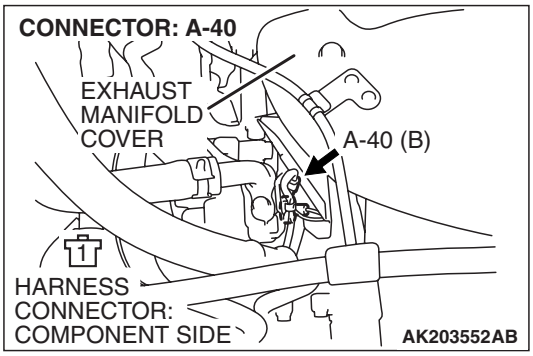

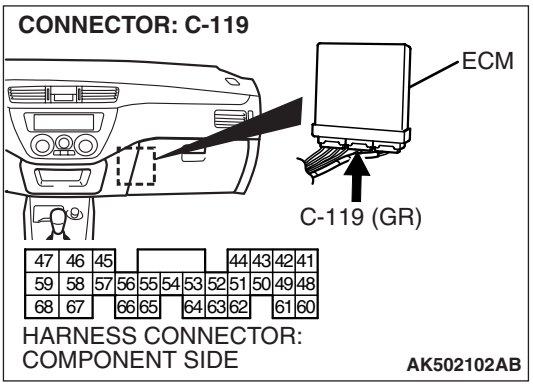

NOTE: Check the harness after checking intermediate connector A-13. If the intermediate connector is damaged, repair or replace it. Refer to GROUP 00E, Harness Connector Inspection P.00E-2. Then go to Step 14.

Q: Is the harness wire in good condition?

YES : Replace the ECM. Then go to Step 14.
NO : Repair it. Then go to Step 14.

STEP 11. Replace the power steering pressure switch.

(1) Replace the power steering pressure switch.
(2) Retest the system.
(3) Check the diagnostic trouble code (DTC).

Q: Is DTC P0551 set?

YES : Go to Step 12.
NO : Go to Step 14.

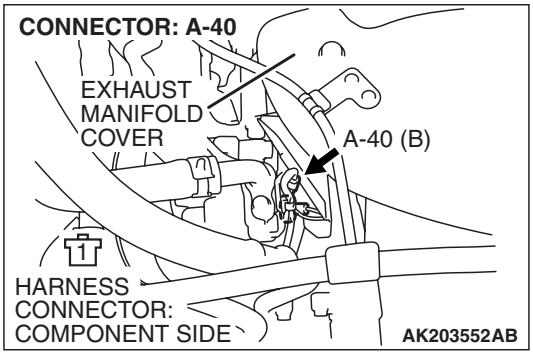

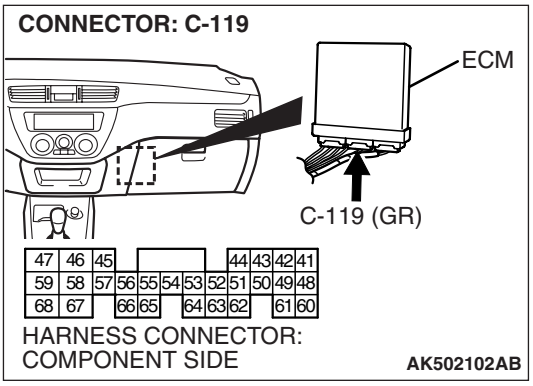

STEP 12. Check harness connector C-119 at ECM for damage.

Q: Is the harness connector in good condition?

YES : Go to Step 13.

NO : Repair or replace it. Refer to GROUP 00E, Harness Connector Inspection P.00E-2. Then go to Step 14.

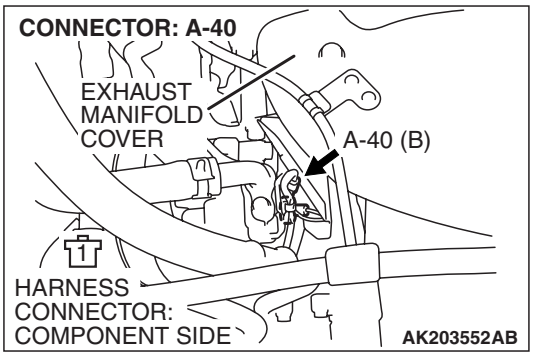

STEP 13. Check for harness damage between power steering pressure switch connector A-40 (terminal No. 1) and ECM connector C-119 (terminal No. 54).

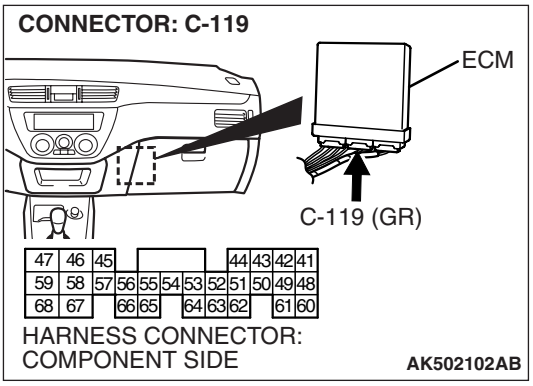

NOTE: Check the harness after checking the itermediate connector A-13. If the intermediate connector is damaged, repair or replace it. Refer to GROUP 00E, Harness Connector Inspection P.00E-2. Then go to Step 14.

Q: Is the harness wire in good condition?

YES : Replace the ECM. Then go to Step 14.

NO : Repair it. Then go to Step 14.

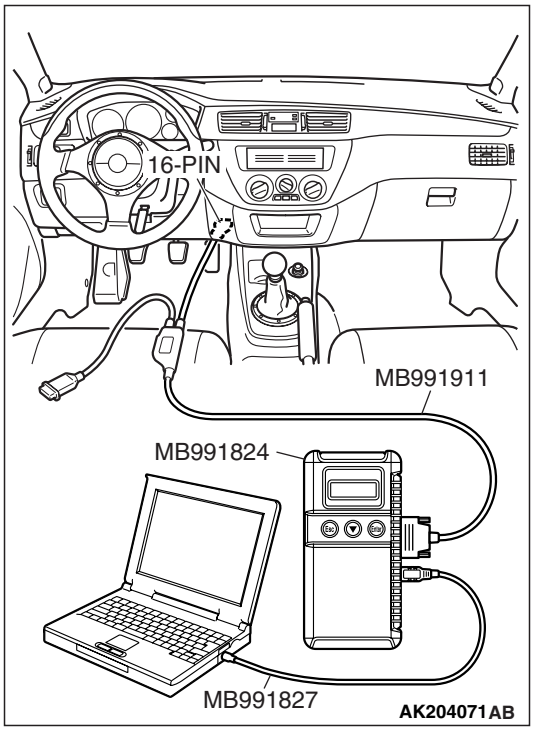

STEP 14. Using scan tool MB991958, check data list item 27: Power Steering Pressure Switch.

⚠ CAUTION

To prevent damage to scan tool MB991958, always turn the ignition switch to the "LOCK" (OFF) position before connecting or disconnecting scan tool MB991958.

(1) Connect scan tool MB991958 to the data link connector.
(2) Start the engine and run at idle.
(3) Set scan tool MB991958 to the data reading mode for item 27, Power Steering Pressure Switch.
- If the steering wheel is stopped while idling, "OFF" will be displayed.
- If the steering wheel is steered while idling, "ON" will be displayed.

(4) Turn the ignition switch to the "LOCK" (OFF) position.

Q: Is the switch operating properly?

YES : The inspection is complete.
NO : Retry the troubleshooting.

DTC P0554: Power Steering Pressure Switch Circuit Intermittent

Power Steering Pressure Switch Circuit

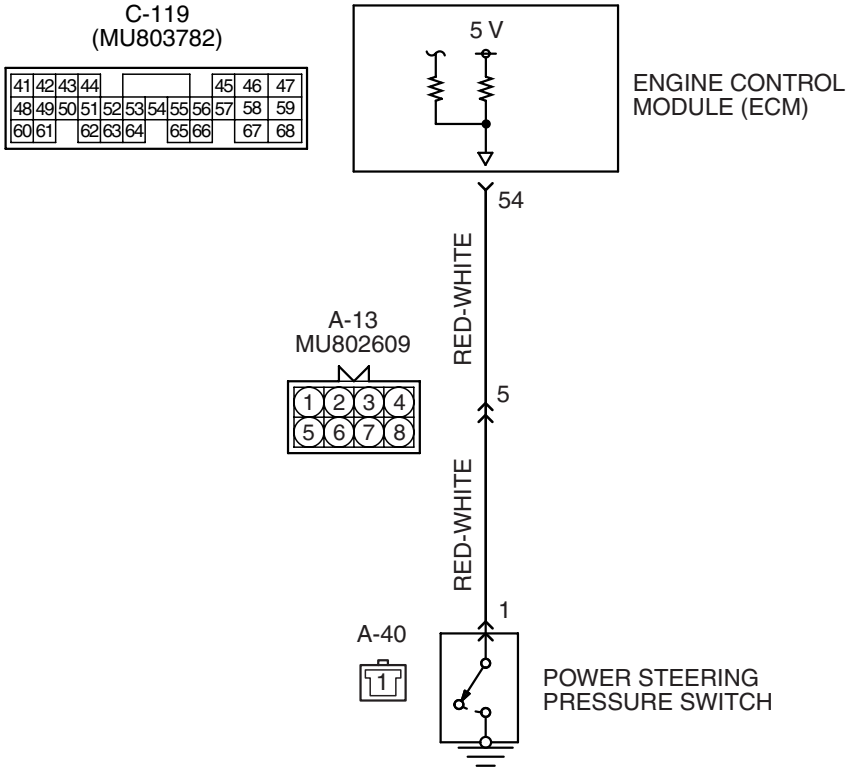

AK502083

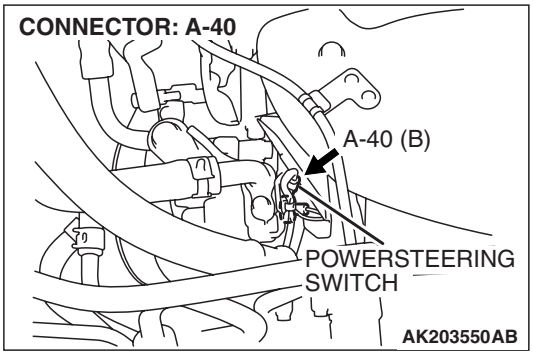

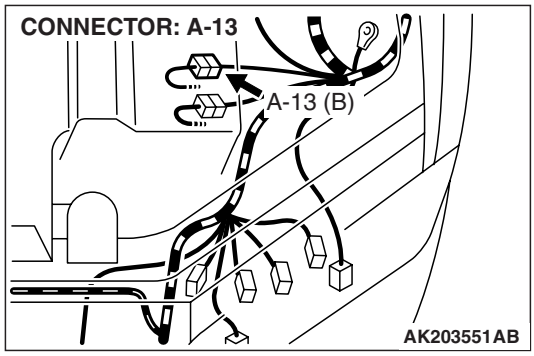

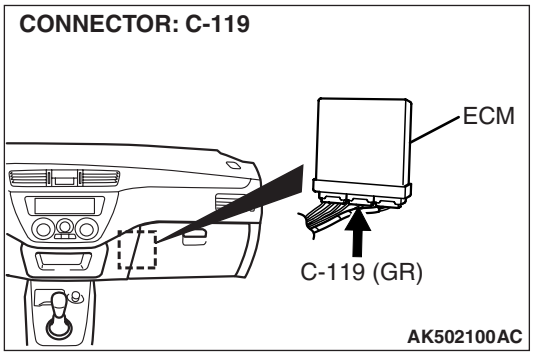

TSB Revision

CIRCUIT OPERATION

- A battery positive voltage is applied to the power steering pressure switch output terminal (terminal No. 1) from the ECM (terminal No. 54) via the resistor in the ECM.

TECHNICAL DESCRIPTION

- The power steering pressure switch converts the existence of a power steering load into a high/low voltage, and inputs it into the ECM.
- When the steering wheel is turned, hydraulic pressure rises. The power steering pressure switch closes, and the applied battery positive voltage will be grounded. With this, the power steering pressure switch output voltage will fluctuate between 0 volt and 12 volts.
- While driving with the steering wheel held straight, the power steering pressure switch turns "OFF".
- The ECM checks whether the power steering pressure switch turns "OFF" or "ON" during driving.

DESCRIPTIONS OF MONITOR METHODS

- Power steering pressure switch changes from off to on more than 10 times for 1 second.

MONITOR EXECUTION

- Continuous

MONITOR EXECUTION CONDITIONS (Other monitor and Sensor)

Other Monitor (There is no temporary DTC stored in memory for the item monitored below)

- Not applicable

Sensor (The sensor below is determined to be normal)

- Engine coolant temperature sensor

DTC SET CONDITIONS

Logic Flow Chart

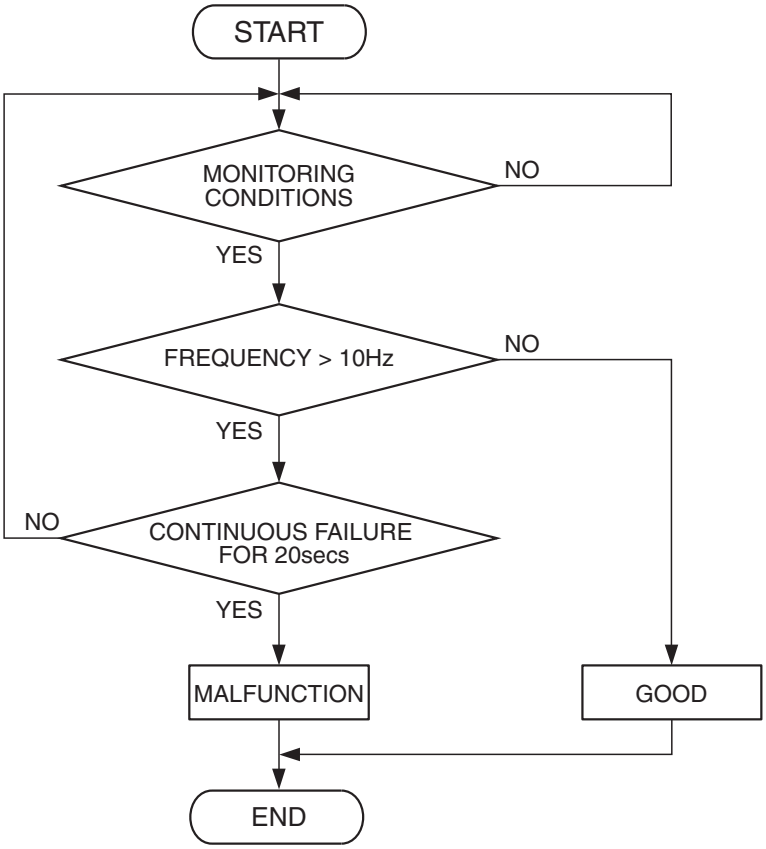

AK301790

Check Conditions

- Engine coolant temperature is higher than 62° C (144° F).
- Vehicle speed is higher than 50 km/h (31 mph).

Judgment Criterion

- The ON/OFF frequency of a power steering pressure switch is 10 Hz or more for 20 seconds.

OBD-II DRIVE CYCLE PATTERN

Refer to Diagnostic Function –OBD-II Drive Cycle – Pattern 17 P.13A-12.

TROUBLESHOOTING HINTS (The most likely causes for this code to be set are:)

- Power steering pressure switch failed.
- Incorrect power steering fluid level.
- Incorrect oil pump pressure.
- Harness damage in power steering pressure switch circuit, or connector damage.
- ECM failed.

DIAGNOSIS

Required Special Tools:

- MB991958: Scan Tool (M.U.T.-III Sub Assembly)
  - MB991824: V.C.I.
  - MB991827: USB Cable
  - MB991911: Main Harness B

STEP 1. Using scan tool MB991958, check data list item 27: Power Steering Pressure Switch.

⚠ CAUTION

To prevent damage to scan tool MB991958, always turn the ignition switch to the "LOCK" (OFF) position before connecting or disconnecting scan tool MB991958.

(1) Connect scan tool MB991958 to the data link connector.
(2) Start the engine and run at idle.
(3) Set scan tool MB991958 to the data reading mode for item 27, Power Steering Pressure Switch.
  - If the steering wheel is stopped while idling, "OFF" will be displayed.
  - If the steering wheel is steered while idling, "ON" will be displayed.

(4) Turn the ignition switch to the "LOCK" (OFF) position.

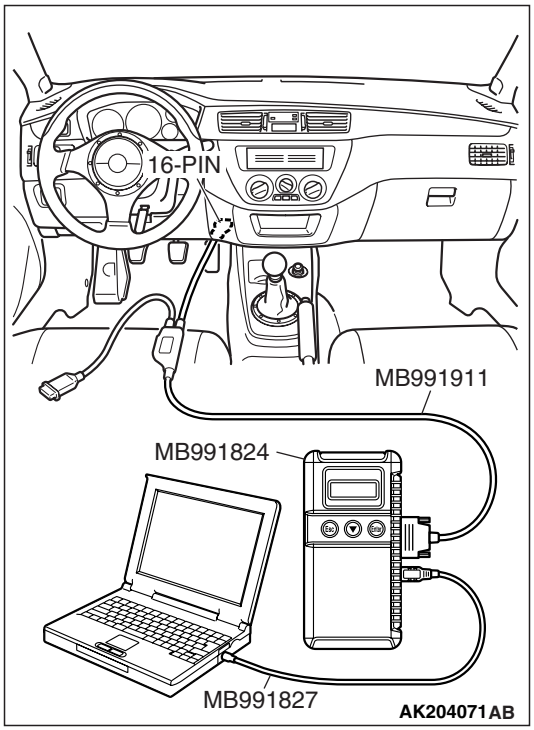

Q: Is the sensor operating properly?

YES : It can be assumed that this malfunction is intermittent. Refer to GROUP 00, How to Use Troubleshooting/Inspection Service Points –How to Cope with Intermittent Malfunctions P.00-13.

NO : Go to Step 2.

STEP 2. Check the power steering fluid level.

Refer to GROUP 37, On-vehicle Service –Fluid Level Check P.37-19.

Q: Are there any abnormalities?

YES : Go to Step 3.

NO : Repair it. Then go to Step 7.

STEP 3. Check the power steering pressure switch.

Refer to GROUP 37, On-vehicle Service –Power Steering Pressure Switch CheckP.37-22.

Q: Are there any abnormalities?

YES : Go to Step 4.

NO : Replace the power steering pressure switch. Then go to Step 7.

STEP 4. Check the oil pump pressure .

Refer to GROUP 37, On-vehicle Service - Oil Pump Pressure Test P.37-3.

Q: Are there any abnormalities?

YES : Go to Step 5.

NO : Repair it. Then go to Step 7.

STEP 5. Check harness connector A-40 at the power steering pressure switch and harness connector C-119 at ECM for damage.

Q: Is the harness connector in good condition?

YES : Go to Step 6.

NO : Repair or replace it. Refer to GROUP 00E, Harness Connector Inspection P.00E-2. Then go to Step 7.

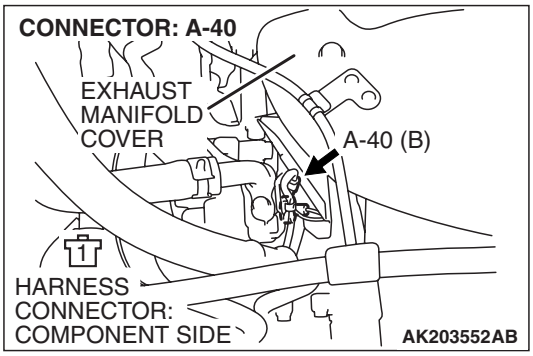

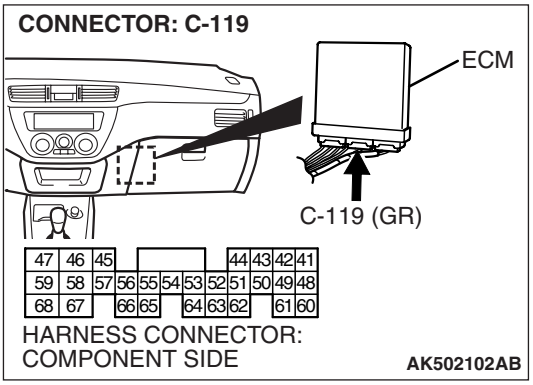

STEP 6. Check for harness damage between power steering pressure switch connector A-40 (terminal No. 1) and ECM connector C-119 (terminal No. 54).

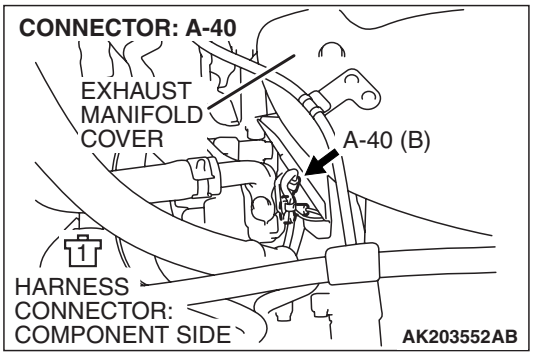

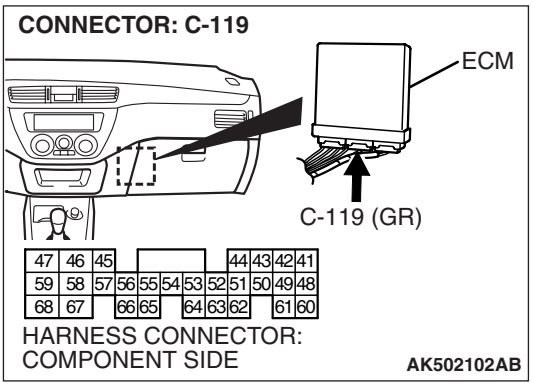

NOTE: Check harness after checking intermediate connector A-13. If intermediate connector is damaged, repair or replace it. Refer to GROUP 00E, Harness Connector Inspection P.00E-2. Then go to Step 7.

Q: Is the harness wire in good condition?

YES : Replace the ECM. Then go to Step 7.
NO : Repair it. Then go to Step 7.

STEP 7. Test the OBD-II drive cycle.

(1) Carry out test drive withe the drive cycle pattern. Refer to Diagnostic Function –OBD-II Drive Cycle –Pattern 17 P.13A-12.
(2) Check the diagnostic trouble code (DTC).

Q: Is DTC P0554 set?

YES : Retry the troubleshooting.
NO : The inspection is complete.

DTC P0603: EEPROM Malfunction

TECHNICAL DESCRIPTION

- ECM stored the information such as the idle learned value and so on in the memory of ECM.

DESCRIPTIONS OF MONITOR METHODS

To check whether the information such as the idle learned value and so on is stored in the memory of ECM.

MONITOR EXECUTION

Once per driving cycle

DTC SET CONDITIONS

Logic Flow Chart

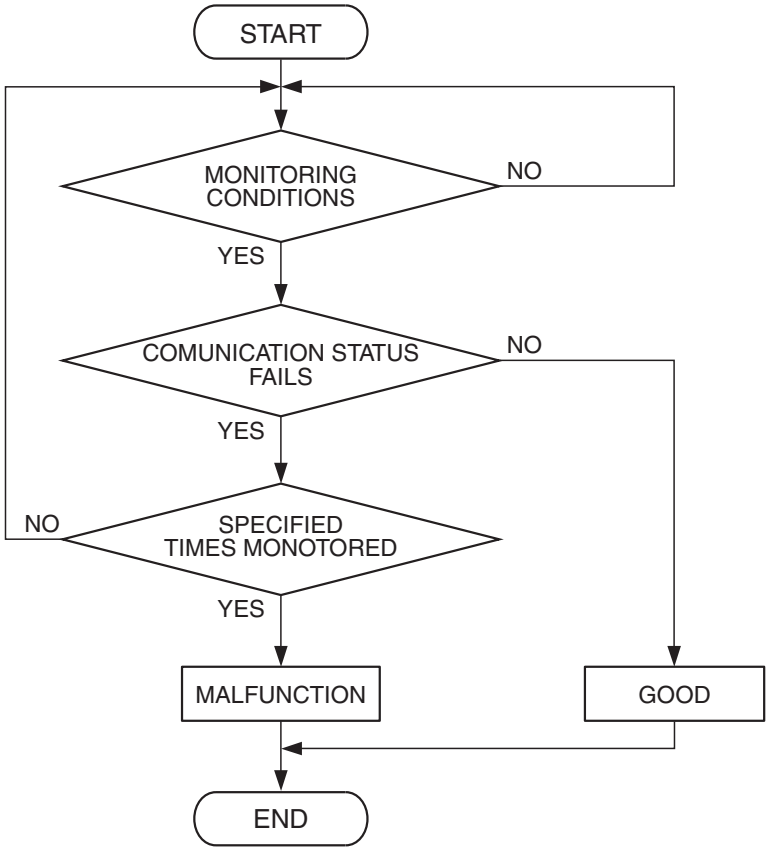

AK401535

Check Condition

- Ignition switch is in "ON" position.

MONITOR EXECUTION CONDITIONS (Other monitor and Sensor)

Other Monitor (There is no temporary DTC stored in memory for the item monitored below)

- Not applicable

Sensor (The sensor below is determined to be normal)

- Not applicable

Judgement Criterion

- The latest data that was flashed while the ignition switch was in "LOCK" (OFF) position are not stored correctly.

OBD-II DRIVE CYCLE PATTERN

None.

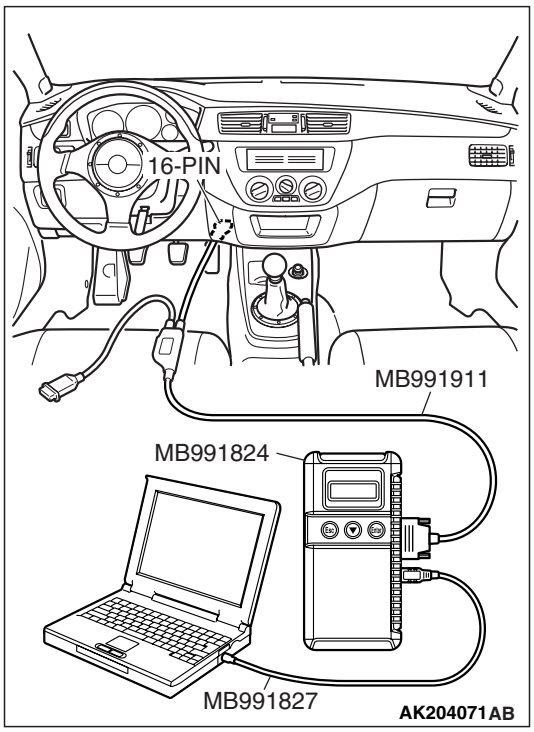

TROUBLESHOOTING HINTS (The most likely causes for this code to be set are:)

- ECM failed.

DIAGNOSIS

Required Special Tools:

- MB991958: Scan tool (M.U.T.-III Sub Assembly)
  - MB991824: V.C.I.
  - MB991827: USB Cable
  - MB991911: Main Harness B

STEP 1. Using scan tool MB991958, read the diagnostic trouble code (DTC)

⚠ CAUTION

To prevent damage to scan tool MB991958, always turn the ignition switch to the "LOCK" (OFF) position before connecting or disconnecting scan tool MB991958.

(1) Connect scan tool MB991958 to the data link connector.
(2) Turn the ignition switch to the "ON" position.
(3) After the DTC has been deleted, read the DTC again.
(4) Turn the ignition switch to the "LOCK" (OFF) position.

Q: Is DTC P0603 set?

YES : Replace the ECM.

NO : It can be assumed that this malfunction is intermittent. Refer to GROUP 00, How to Use Troubleshooting/Inspection Service Points –How to Cope with Intermittent Malfunctions P.00-13.

DTC P0622: Generator FR Terminal Circuit Malfunction

Generator Circuit

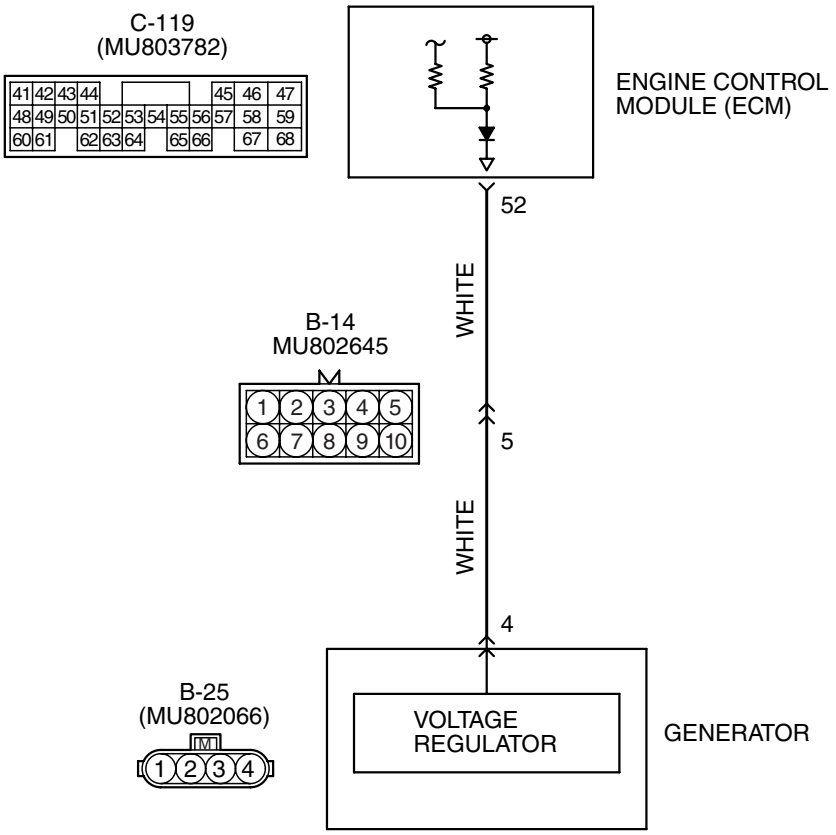

AK502084

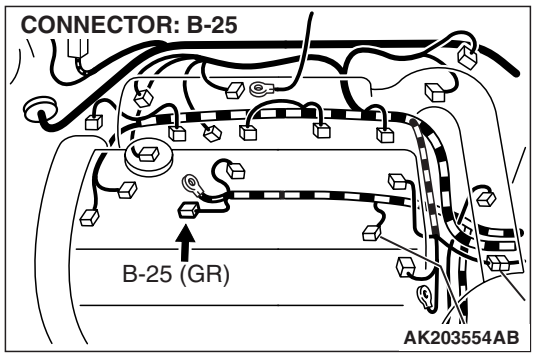

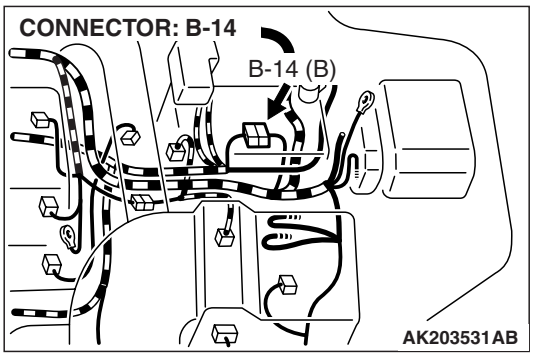

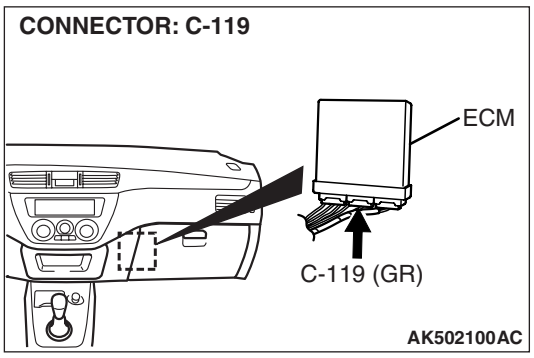

TSB Revision

CIRCUIT OPERATION

- The ECM (terminal No. 52) applies a battery positive voltage into the generator FR terminal No. 4 via resistance inside the unit.

TECHNICAL DESCRIPTION

- When the generator field coils are controlled, the generator FR terminal inputs signal to the ECM.
- The ECM detects the generator output with the input signal, and controls the idle air control motor according to the generator output.

DTC SET CONDITIONS

Check Condition

- Engine speed is higher than 50 r/min.

Judgement Criterion

- Input voltage from the generator FR terminal has continued to be approximately battery positive voltage for 20 seconds.

TROUBLESHOOTING HINTS (The most likely causes for this code to be set area:)

- Open circuit in generator FR terminal circuit.
- ECM failed.

DIAGNOSIS

STEP 1. Measure the voltage at generator intermediate connector B-14 by backprobing.

(1) Do not disconnect connector B-14.
(2) Start the engine and run at idle.

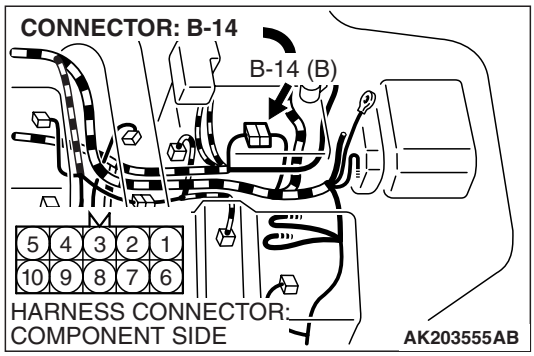

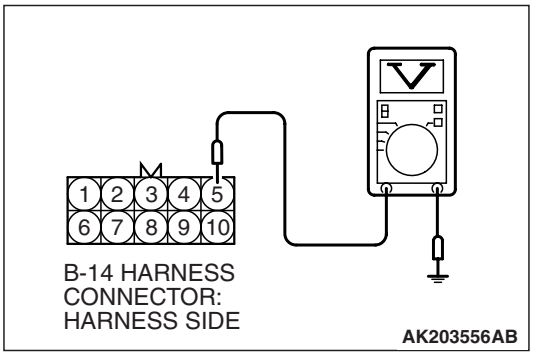

(3) Measure the voltage between terminal No. 5 and ground by backprobing.
  a. Engine: warming up
  b. Radiator fan: stopped
  c. Headlight switch: OFF to ON
  d. Rear defogger switch: OFF to ON
  e. Stoplight switch: OFF to ON
  - Voltage should be drops.

(4) Turn the ignition switch to the "LOCK" (OFF) position.

Q: Did the measured voltage drop?

YES : Go to Step 2.
NO : Go to Step 4.

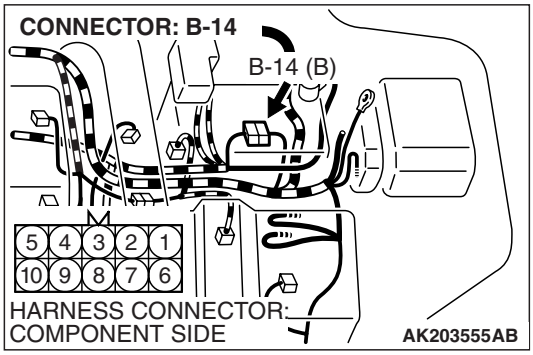

STEP 2. Check harness connector B-14 at generator intermediate connector for damage.

Q: Is the harness connector in good condition?

YES : Go to Step 3.

NO : Repair or replace it. Refer to GROUP 00E, Harness Connector Inspection P.00E-2. Then go to Step 11.

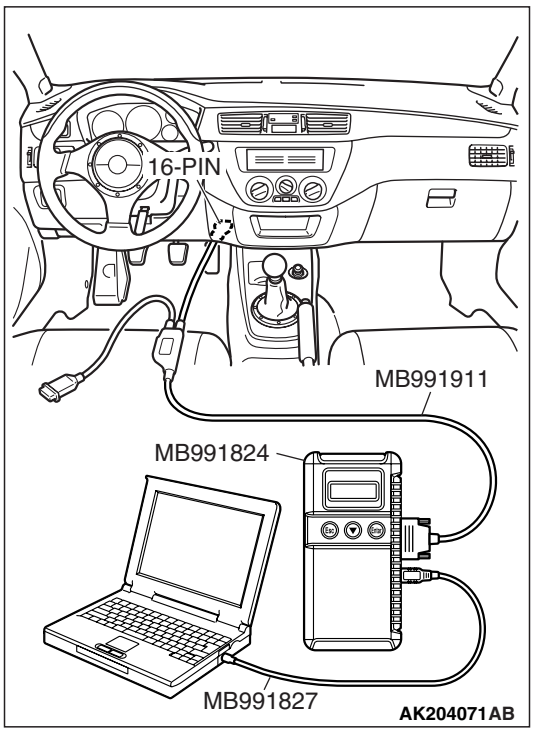

STEP 3. Using scan tool MB991958, read the diagnostic trouble code (DTC).

⚠ CAUTION

To prevent damage to scan tool MB991958, always turn the ignition switch to the "LOCK" (OFF) position before connecting or disconnecting scan tool MB991958.

(1) Connect scan tool MB991958 to the data link connector.
(2) Start the engine and run at idle.
(3) Read the DTC.
(4) Turn the ignition switch to the "LOCK" (OFF) position.

Q: Is DTC P0622 set?

YES : Replace the ECM. Then go to Step 11.

NO : It can be assumed that this malfunction is intermittent. Refer to GROUP 00, How to Use Troubleshooting/Inspection Service Points –How to Cope with Intermittent Malfunctions P.00-13.

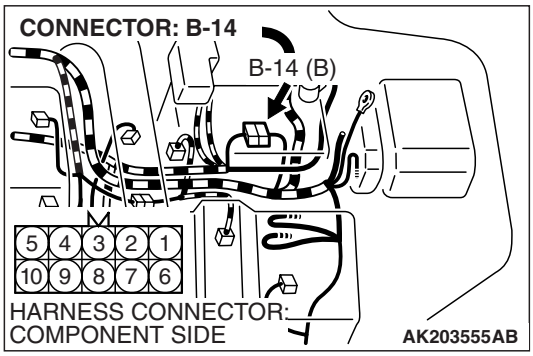

STEP 4. Check harness connector B-14 at generator intermediate connector for damage.

Q: Is the harness connector in good condition?

YES : Go to Step 5.

NO : Repair or replace it. Refer to GROUP 00E, Harness Connector Inspection P.00E-2. Then go to Step 11.

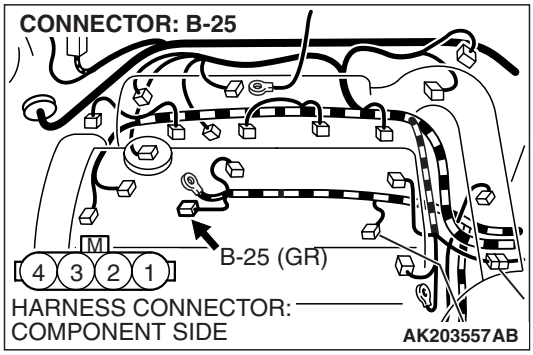

STEP 5. Check harness connector B-25 at generator connector for damage.

Q: Is the harness connector in good condition?

YES : Go to Step 6.

NO : Repair or replace it. Refer to GROUP 00E, Harness Connector Inspection P.00E-2. Then go to Step 11.

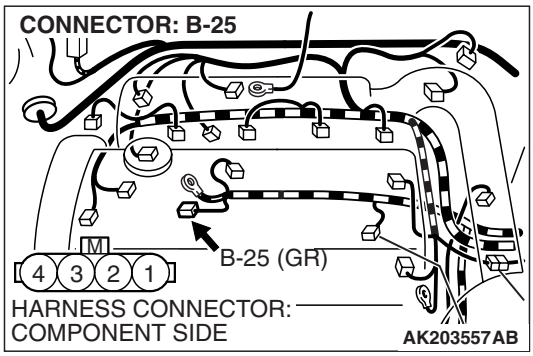

STEP 6. Measure the voltage at generator harness side connector B-25.

(1) Disconnect connector B-25 and measure at the harness side.

(2) Turn the ignition switch to the "ON" position.

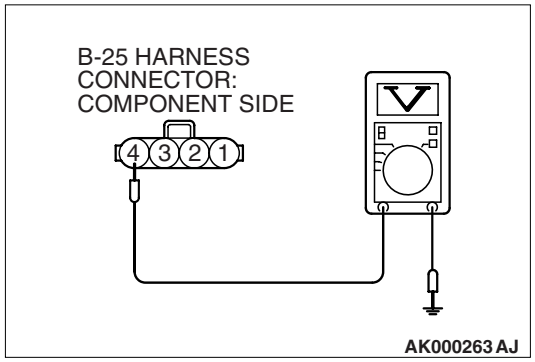

(3) Measure the voltage between terminal No. 4 and ground.
- Voltage should be battery positive voltage.

(4) Turn the ignition switch to the "LOCK" (OFF) position.

Q: Is battery positive voltage (approximately 12 volts) present?

YES : Go to Step 9.

NO : Go to Step 7.

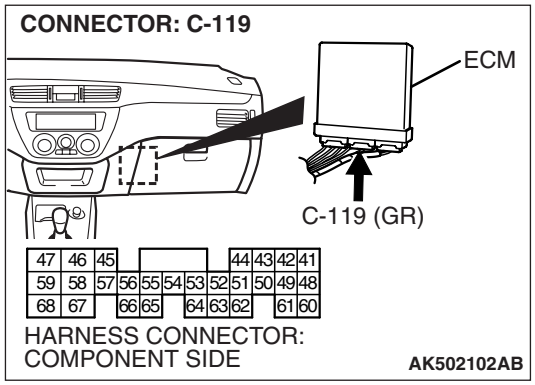

STEP 7. Check harness connector C-119 at ECM for damage.

Q: Is the harness connector in good condition?

YES : Go to Step 8.

NO : Repair or replace it. Refer to GROUP 00E, Harness Connector Inspection P.00E-2. Then go to Step 11.

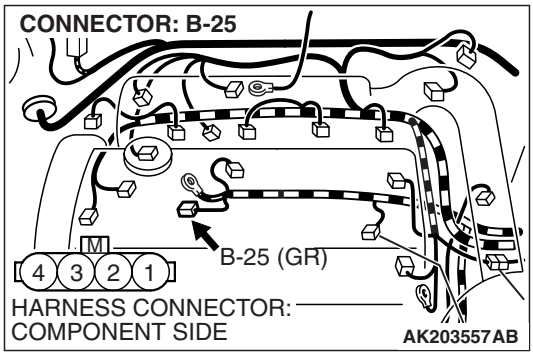

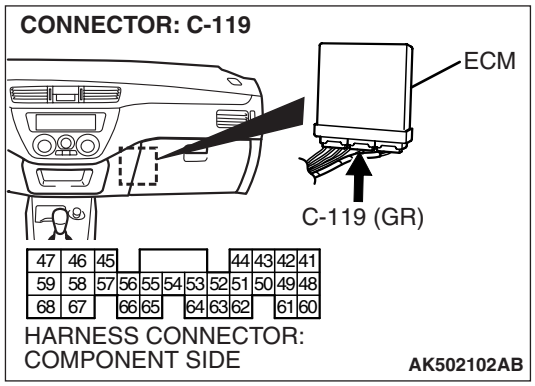

STEP 8. Check for open circuit and short circuit to ground between generator connector B-25 (terminal No. 4) and ECM connector C-119 (terminal No. 52).

Q: Is the harness wire in good condition?

YES : Replace the ECM. Then go to Step 11.

NO : Repair it. Then go to Step 11.

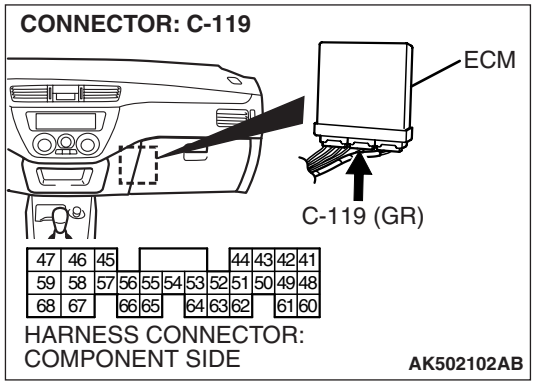

STEP 9. Check harness connector C-119 at ECM for damage.

Q: Is the harness connector in good condition?

YES : Go to Step 10.

NO : Repair or replace it. Refer to GROUP 00E, Harness Connector Inspection P.00E-2. Then go to Step 11.

STEP 10. Check for harness damage between generator connector B-25 (terminal No. 4) and ECM connector C-119 (terminal No. 52).

Q: Is the harness wire in good condition?

YES : Replace the generator. Then go to Step 11.
NO : Repair it. Then go to Step 11.

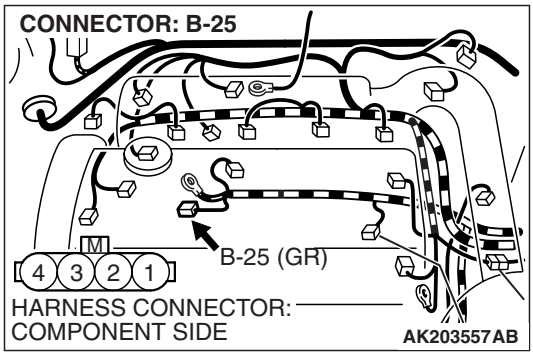

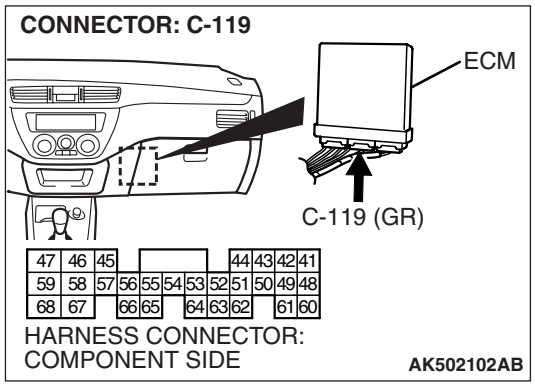

STEP 11. Using scan tool MB991958, read the diagnostic trouble code (DTC).

⚠ CAUTION

To prevent damage to scan tool MB991958, always turn the ignition switch to the "LOCK" (OFF) position before connecting or disconnecting scan tool MB991958.

(1) Connect scan tool MB991958 to the data link connector.
(2) Turn the ignition switch to the "ON" position.
(3) Read the DTC.
(4) Turn the ignition switch to the "LOCK" (OFF) position.

Q: Is DTC P0622 set?

YES : Retry the troubleshooting.
NO : The inspection is complete.

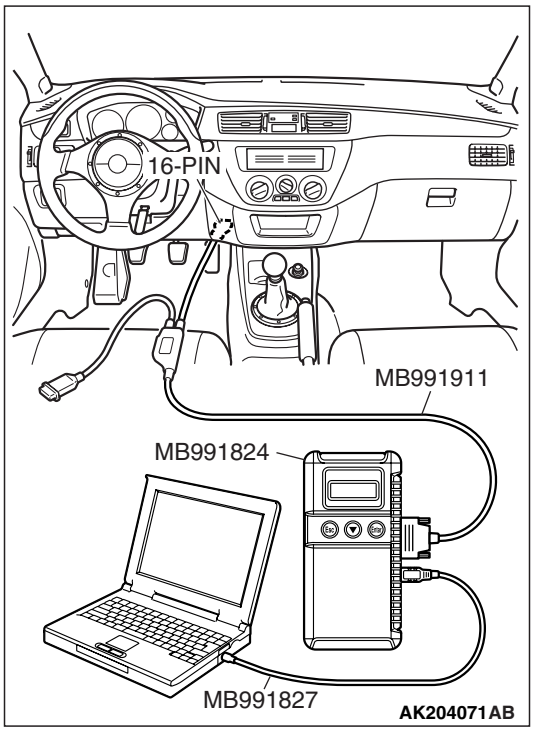

DTC P0630: Vehicle Identification Number (VIN) Malfunction

TECHNICAL DESCRIPTION

- The Vehicle Identification Number (VIN) is stored in the ECM by the vehicle manufacturer.

DESCRIPTIONS OF MONITOR METHODS

The ECM checks whether the VIN is being entered or not.

MONITOR EXECUTION

Continuous

DTC SET CONDITIONS

Logic Flow Chart

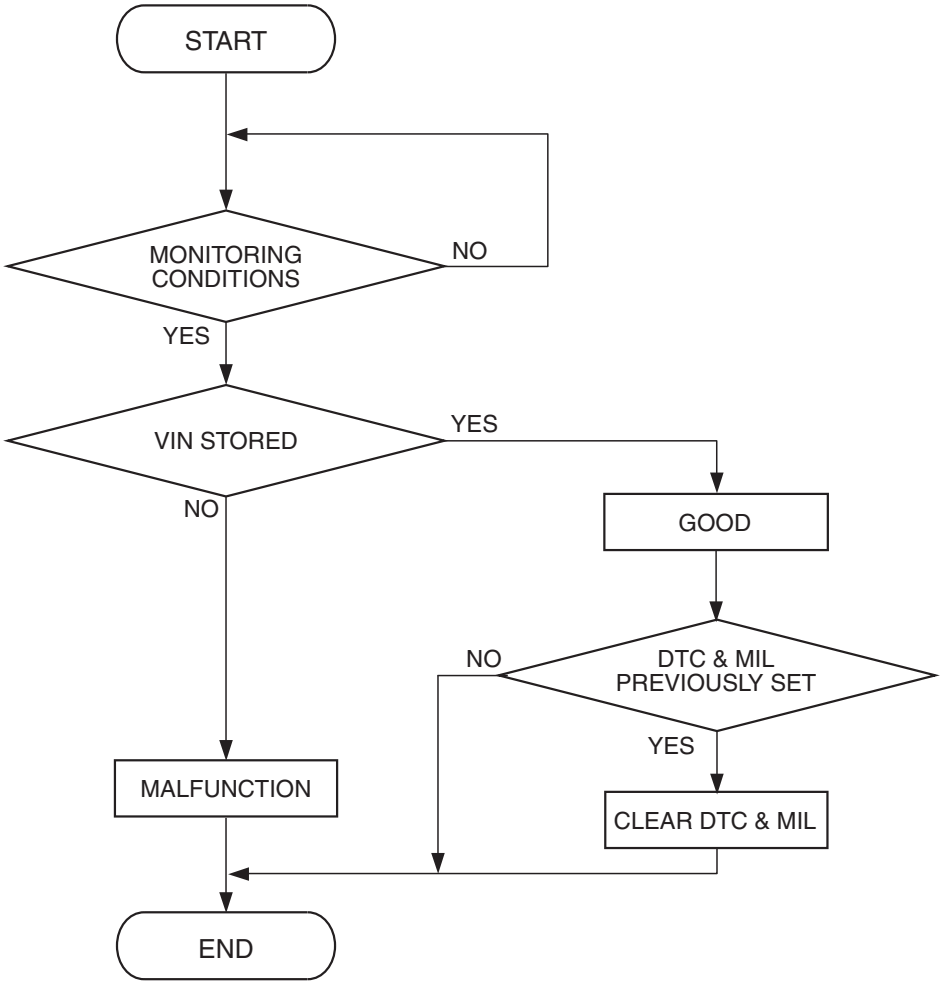

AK401536

Check Conditions

- Ignition switch is in "ON" position.
- EEPROM is normal.

Judgement Criterion

- VIN (current) has not been written.

MONITOR EXECUTION CONDITIONS (Other monitor and Sensor)

Other Monitor (There is no temporary DTC stored in memory for the item monitored below)

- Not applicable

Sensor (The sensor below is determined to be normal)

- Not applicable

TSB Revision

OBD-II DRIVE CYCLE PATTERN

None.

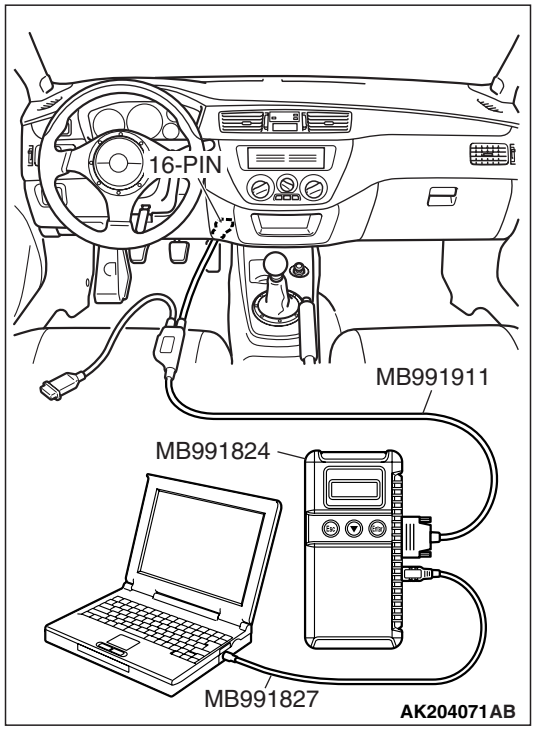

TROUBLESHOOTING HINTS (The most likely causes for this code to be set are:)

- ECM failed.

DIAGNOSIS

Required Special Tools:

- MB991958: Scan tool (M.U.T.-III Sub Assembly)
  - MB991824: V.C.I.
  - MB991827: USB Cable
  - MB991911: Main Harness B

STEP 1. Using scan tool MB991958, check VIN Information.

⚠ CAUTION

To prevent damage to scan tool MB991958, always turn the ignition switch to the "LOCK" (OFF) position before connecting or disconnecting scan tool MB991958.

(1) Connect scan tool MB991958 to the data link connector.
(2) Set scan tool MB991958 to the coding mode for VIN Information.
(3) Turn the ignition switch to the "LOCK" (OFF) position.

Q: Has VIN (current) been written?

YES : Go to Step 2.
NO : Write VIN. Then go to Step 3.

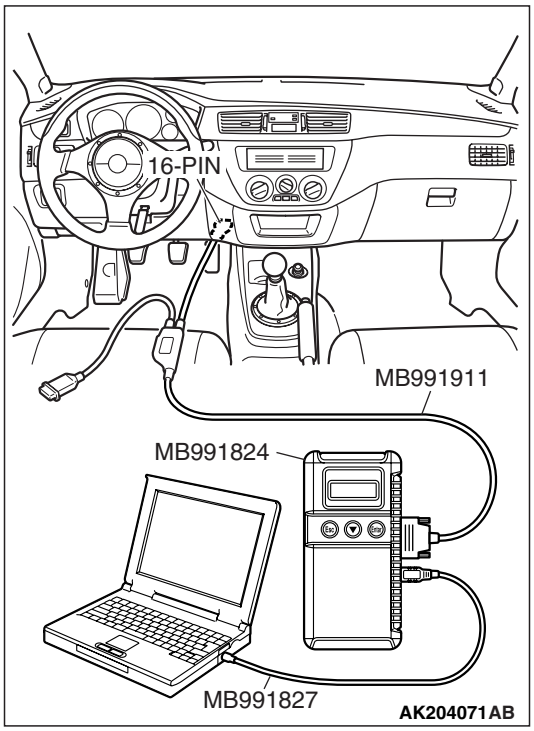

STEP 2. Using scan tool MB991958, read the diagnostic trouble code (DTC)

(1) Turn the ignition switch to the "ON" position.
(2) Check the diagnostic trouble code (DTC).

Q: Is DTC P0630 set?

YES : Replace the ECM.
NO : It can be assumed that this malfunction is intermittent. Refer to GROUP 00, How to Use Troubleshooting/Inspection Service Points –How to Cope with Intermittent Malfunctions P.00-13.

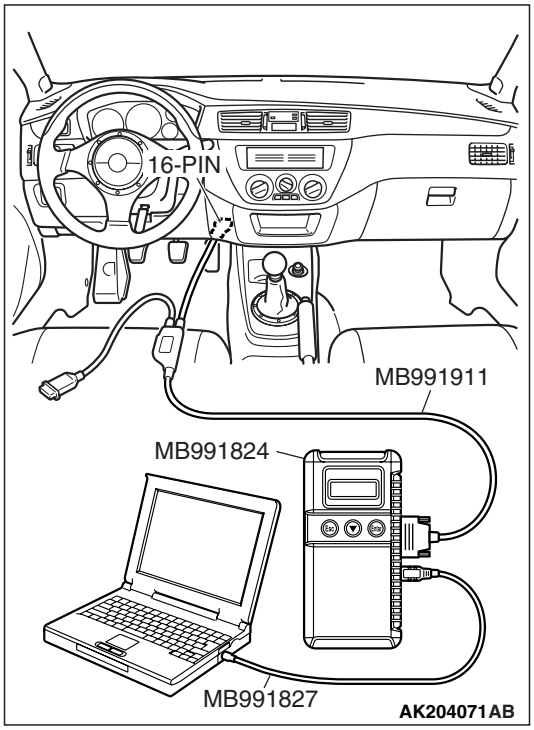

STEP 3. Using scan tool MB991958, read the diagnostic trouble code (DTC)

(1) Turn the ignition switch to the "ON" position.
(2) Check the diagnostic trouble code (DTC).

Q: Is DTC P0630 set?

YES : Replace the ECM.
NO : The inspection is complete.

DTC P0830: Clutch Pedal Position Switch Circuit Range/Performance

Clutch Pedal Position Switch Circuit

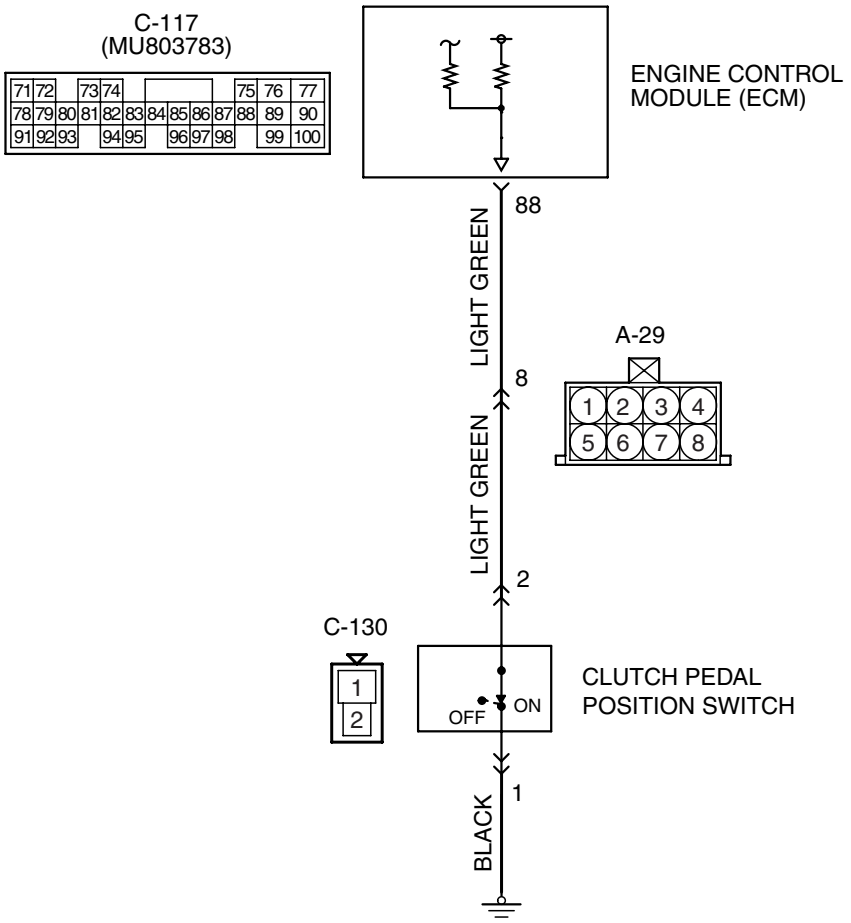

AK502085

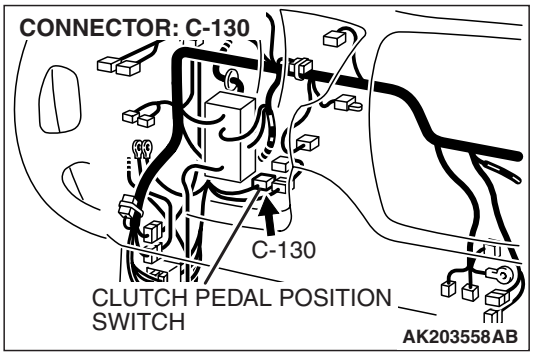

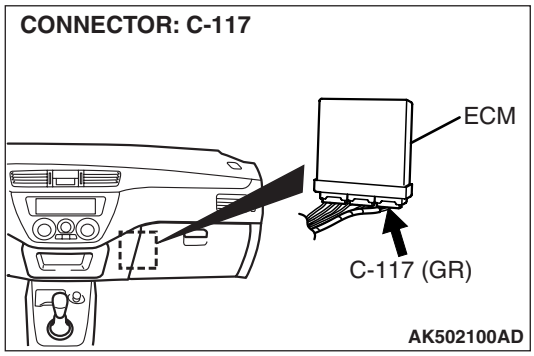

TSB Revision

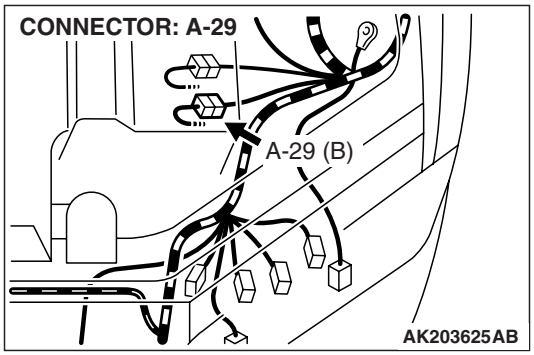

CIRCUIT OPERATION

- A battery positive voltage is applied to the clutch pedal position switch output terminal (terminal No. 2) from the ECM (terminal No. 88) via the resistor in the ECM.

TECHNICAL DESCRIPTION

- The clutch pedal position switch inputs the high/low voltage into the ECM in accordance with whether the clutch pedal is being pressed.
- When the driver presses the clutch pedal while shifting gears, the contact of the clutch pedal position switch closes, causing the low signal to be input into the ECM. At this time, the ECM effects a correction to reduce the fuel injection volume.

DTC SET CONDITIONS

Check Condition, Judgment Criterion

- After the engine is started and the vehicle attains a minimum speed of 30 km/h (19 mph), the inversion of the high-low signals of the clutch pedal position switch is not detected even once.

TROUBLESHOOTING HINTS (The most likely causes for this code to be set are:)

- Clutch pedal position switch failed.
- Open or shorted clutch pedal position switch circuit, harness damage or connector damage.
- ECM failed.

DIAGNOSIS

Required Special Tools:

- MB991958: Scan Tool (M.U.T.-III Sub Assembly)
  - MB991824: V.C.I.
  - MB991827: USB Cable
  - MB991911: Main Harness B

STEP 1. Check harness connector C-130 at clutch pedal position switch for damage.

Q: Is the harness connector in good condition?

YES : Go to Step 2.

NO : Repair or replace it. Refer to GROUP 00E, Harness Connector Inspection P.00E-2. Then go to Step 9.

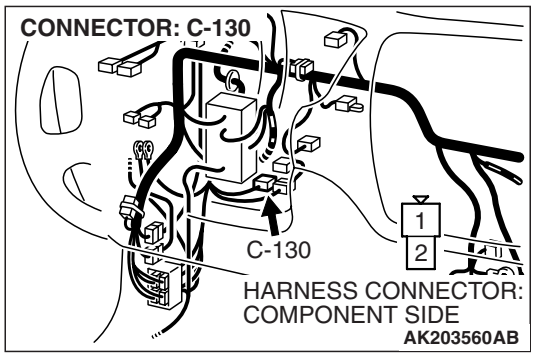

STEP 2. Check the clutch pedal position switch.

(1) Disconnect the clutch pedal position switch connector C-130.

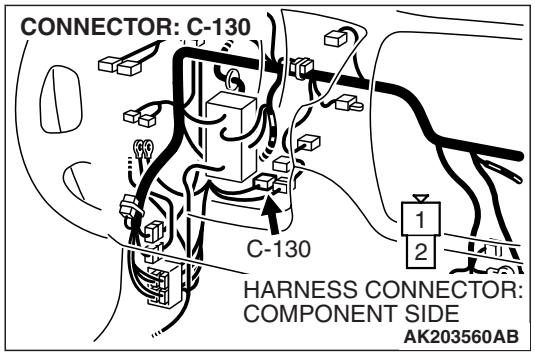

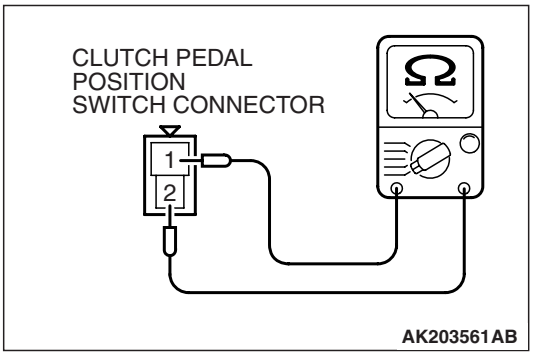

(2) Check for continuity between the clutch pedal position switch side connector terminal No. 1 and No. 2.
- If the clutch pedal is not pressed, the measurement should indicate the current is going.
- If the clutch pedal is pressed, the measurement should indicate the current is not going.

Q: Are there any abnormalities?

YES : Repair it. Then go to Step 9.
NO : Go to Step 3.

STEP 3. Measure the power supply voltage at clutch pedal position switch harness side connector C-130.

(1) Disconnect the connector C-130 and measure the harness side.

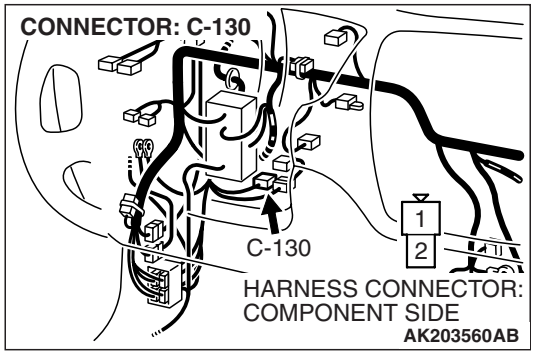

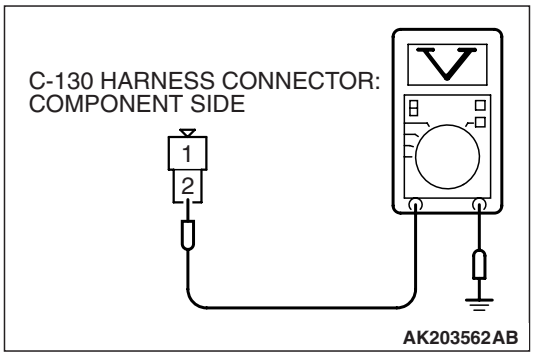

(2) Turn the ignition switch to the "ON" position. Measure the voltage between terminal No. 2 and ground.
- Voltage should be battery positive voltage.

(3) Turn the ignition switch to the "LOCK" (OFF) position.

Q: Is battery positive voltage (approximately 12 volts) present?

YES : Go to Step 6.
NO : Go to Step 4.

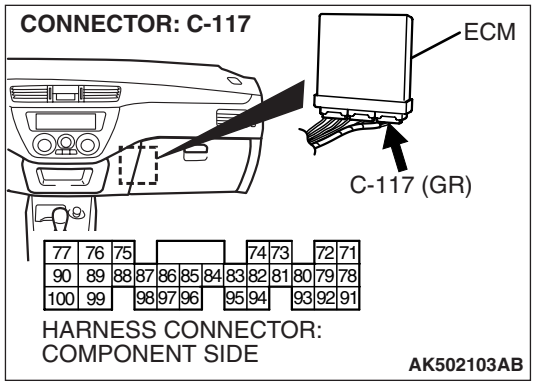

STEP 4. Check harness connector C-117 at ECM for damage.

Q: Is the harness connector in good condition?

YES : Go to Step 5.

NO : Repair or replace it. Refer to GROUP 00E, Harness Connector Inspection P.00E-2. Then go to Step 9.

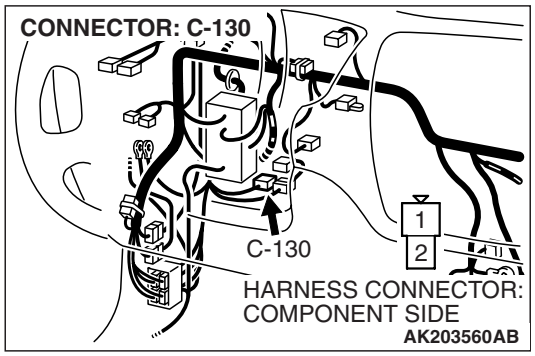

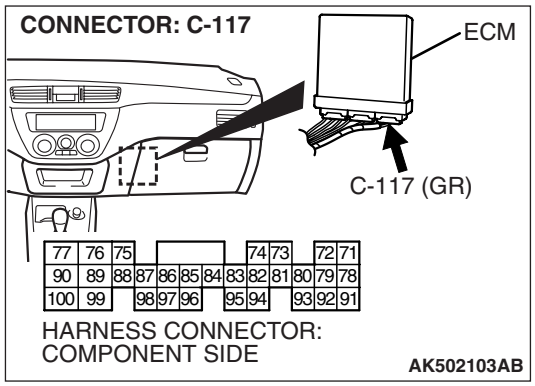

STEP 5. Check for open circuit and short circuit to ground between clutch pedal position switch connector C-130 (terminal No. 2) and ECM connector C-117 (terminal No. 88).

NOTE: Check harness after checking intermediate connector A-29. If the intermediate connector is damaged, repair or replace it. Refer to GROUP 00E, Harness Connector Inspection P.00E-2. Then go to Step 9.

Q: Is the harness wire in good condition?

YES : Replace the ECM. Then go to Step 9.

NO : Repair it. Then go to Step 9.

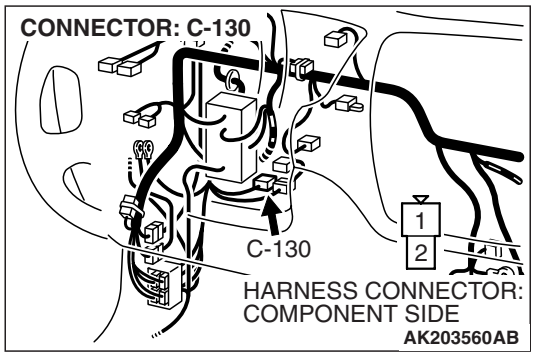

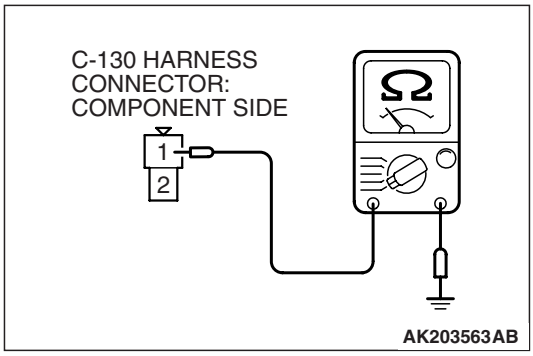

STEP 6. Check for continuity at clutch pedal position switch harness side connector C-130.

(1) Disconnect the connector C-130 and measure the harness side.

(2) Check for the continuity between terminal No. 1 and ground.
- Should be less than 2 ohms.

Q: Does continuity exist?

YES : Go to Step 7.

NO : Repair harness wire between clutch pedal position switch connector C-130 terminal No. 1 and ground because of harness damage. Then go to Step 9.

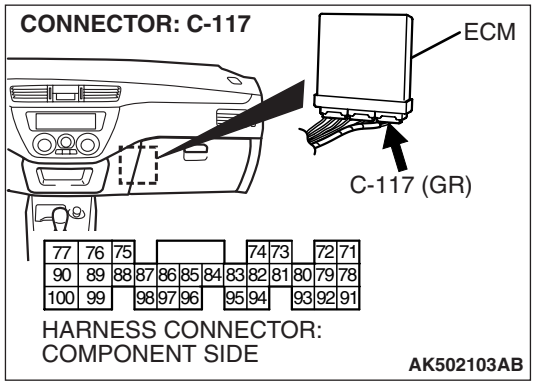

STEP 7. Check harness connector C-117 at ECM for damage.

Q: Is the harness connector in good condition?

YES : Go to Step 8.

NO : Repair or replace it. Refer to GROUP 00E, Harness Connector Inspection P.00E-2. Then go to Step 9.

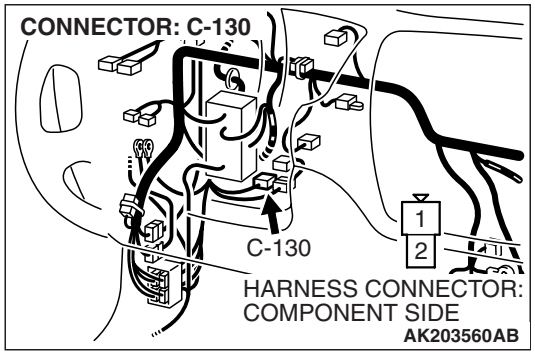

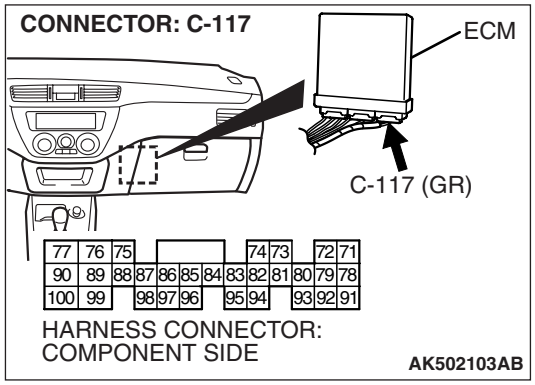

STEP 8. Check for harness damage between clutch pedal position switch connector C-130 (terminal No. 2) and ECM connector C-117 (terminal No. 88).

NOTE: Check harness after checking intermediate connector A-29. If intermediate connector is damaged, repair or replace it. Refer to GROUP 00E, Harness Connector Inspection P.00E-2. Then go to Step 9.

Q: Is the harness wire in good condition?

YES : Replace the ECM. Then go to Step 9.
NO : Repair it. Then go to Step 9.

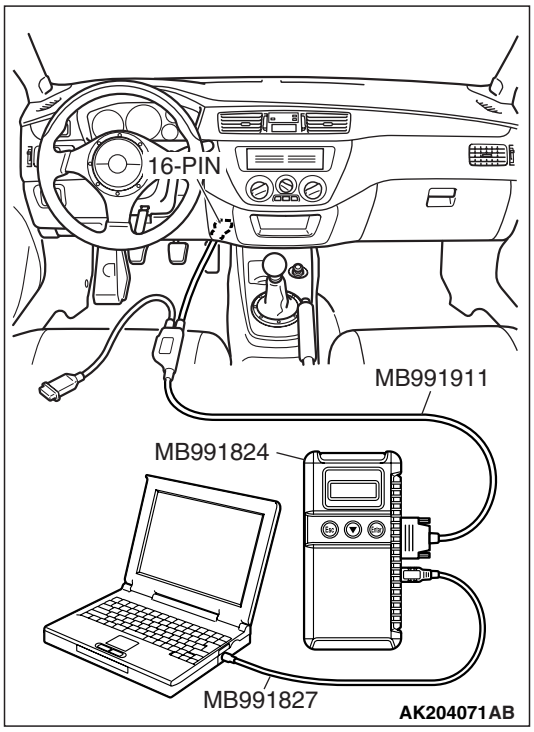

STEP 9. Using scan tool MB991958, read the diagnostic trouble code (DTC).

⚠ CAUTION

To prevent damage to scan tool MB991958, always turn the ignition switch to the "LOCK" (OFF) position before connecting or disconnecting scan tool MB991958.

(1) Connect scan tool MB991958 to the data link connector.
(2) Turn the ignition switch to the "ON" position.
(3) Erase the DTC.
(4) Drive the vehicle at a minimum speed of 30 km/h (19 mph).
(5) After completing the test drive, read the DTC. Turn the ignition switch to the "LOCK" (OFF) position.

Q: Is DTC P0830 set?

YES : The inspection is complete.
NO : Retry the troubleshooting.

DTC P1021: Oil Feeder Control Valve Circuit

Oil Feeder Control Valve Circuit

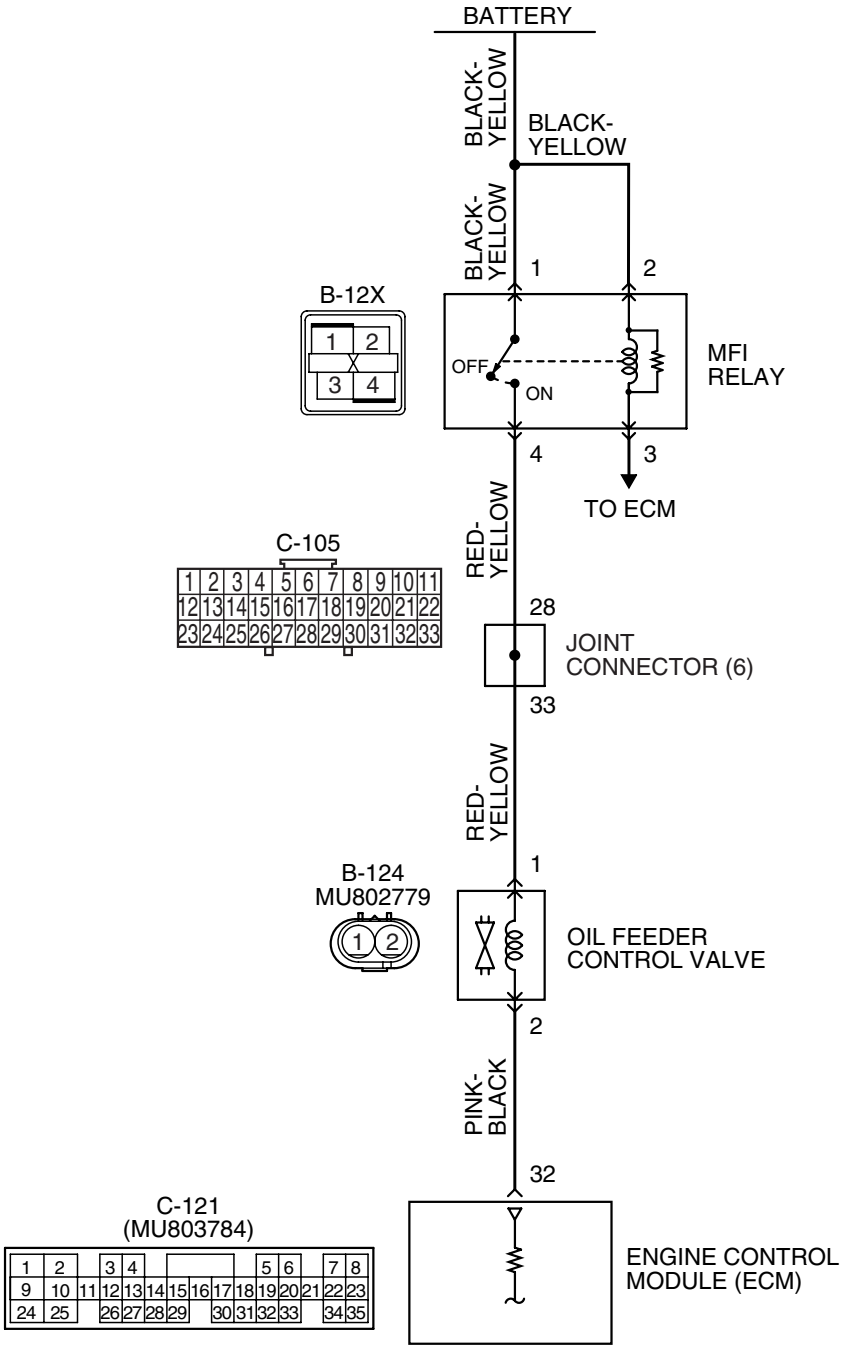

AK502086

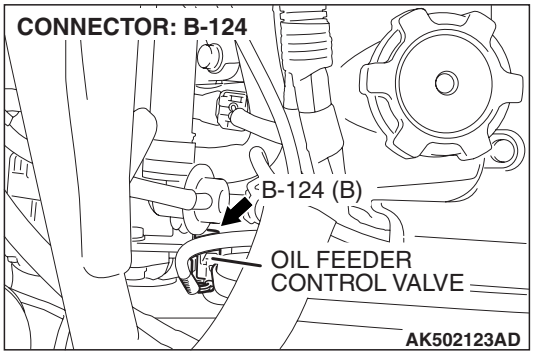

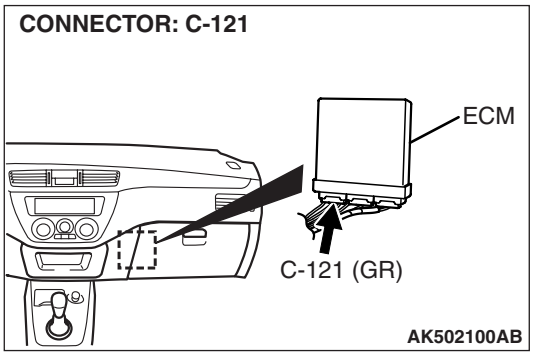

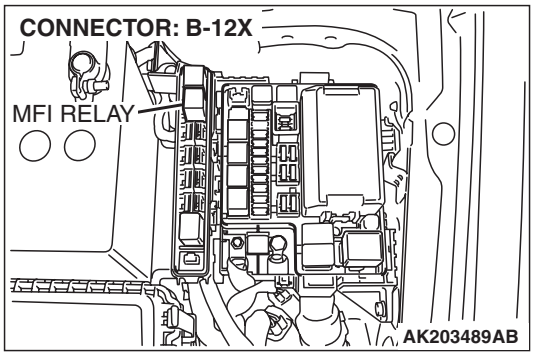

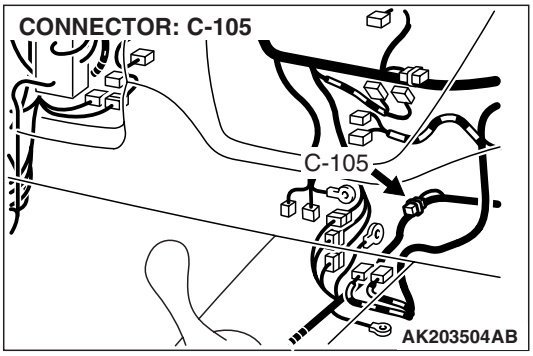

CIRCUIT OPERATION

- The oil feeder control valve power is supplied from the MFI relay (terminal No. 4).
- The ECM controls ground oil feeder control valve by turning the power transistor in the ECM "ON" and "OFF".

TECHNICAL DESCRIPTION

- The oil feeder control valve switches the cams to operate the MIVEC system in the low-speed or high-speed mode in accordance with the signals from the ECM.

DESCRIPTIONS OF MONITOR METHODS

Oil feeder control valve circuit voltage is less than specified value.

MONITOR EXECUTION

Continuous

MONITOR EXECUTION CONDITIONS (Other monitor and Sensor)

Other Monitor (There is no temporary DTC stored in memory for the item monitored below)

- Not applicable

Sensor (The sensor below is determined to be normal)

- Not applicable

DTC SET CONDITIONS

Logic Flow Chart

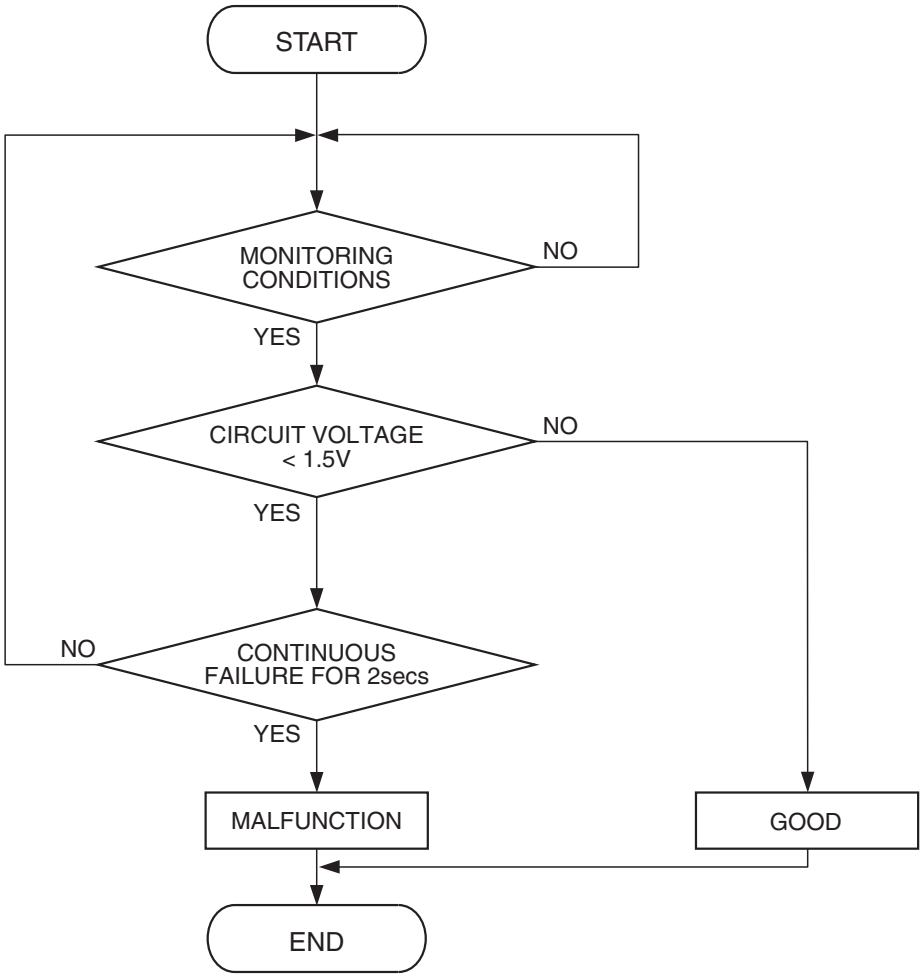

AK403642

Check Conditions

- Ignition switch: ON
- Oil feeder control valve is "OFF".
- Battery positive voltage is between 10 and 16.5 volts.
- 0.1 second has elapsed after the above mentioned conditions have been met.

Judgement Criterion

- The ECM terminal voltage of oil feeder control valve circuit is less than 1.5 volts for 2 seconds.

OBD-II DRIVE CYCLE PATTERN

Refer to Diagnostic Function –OBD-II Drive Cycle – Pattern 23 P.13A-12.

TROUBLESHOOTING HINTS (The most likely causes for this code to be set are:)

- Oil feeder control valve failed.
- Open or shorted oil feeder control valve circuit, or harness damage, or connector damage.
- ECM failed.

DIAGNOSIS

Required Special Tools:

- MB991958: Scan Tool (M.U.T.-III Sub Assembly)
  - MB991824: V.C.I.
  - MB991827: USB Cable
  - MB991911: Main Harness B

STEP 1. Check harness connector B-124 at the oil feeder control valve for damage.

Q: Is the harness connector in good condition?

YES : Go to Step 2.

NO : Repair or replace it. Refer to GROUP 00E, Harness Connector Inspection P.00E-2. Then go to Step 12.

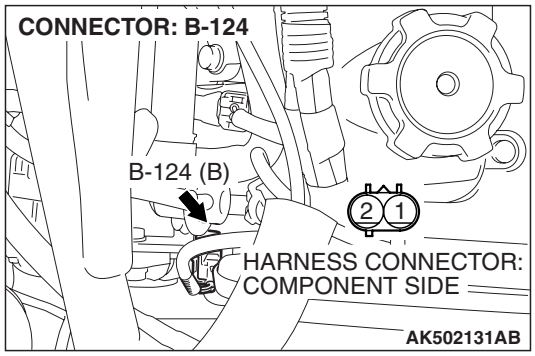

STEP 2. Check the oil feeder control valve.

(1) Disconnect the oil feeder control valve connector B-124.

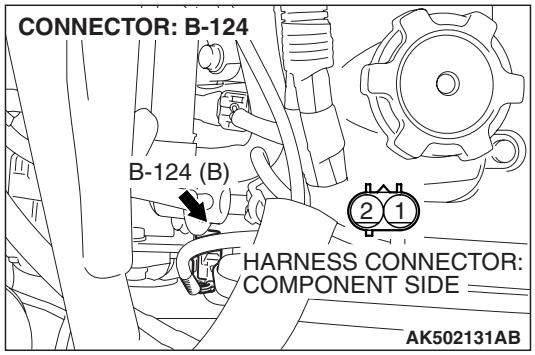

(2) Measure the resistance between oil feeder control valve side connector terminal No. 1 and No. 2.

Standard value: 6.9 – 7.9 ohms [at 20° C (68° F)]

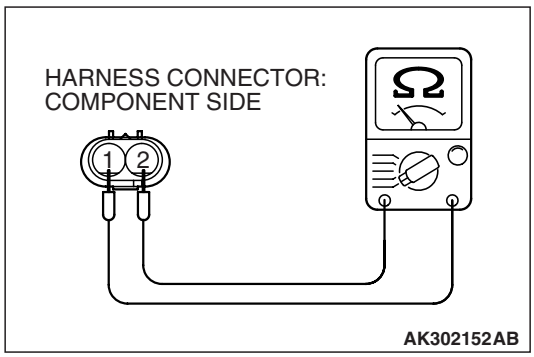

Q: Is the measured resistance between 6.9 and 7.9 ohms [at 20° C (68° F)]?

YES : Go to Step 3.

NO : Replace the oil feeder control valve. Then go to Step 12.

STEP 3. Measure the power supply voltage at oil feeder control valve harness side connector B-124.

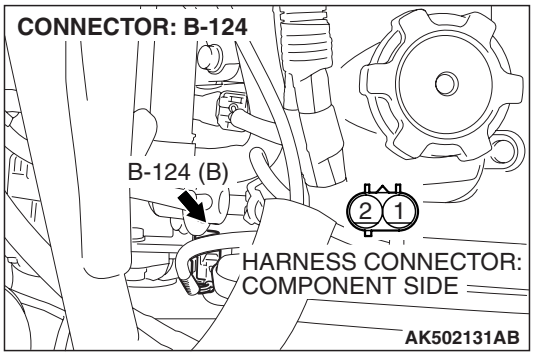

(1) Disconnect the connector B-124 and measure at the harness side.
(2) Turn the ignition switch to the "ON" position.

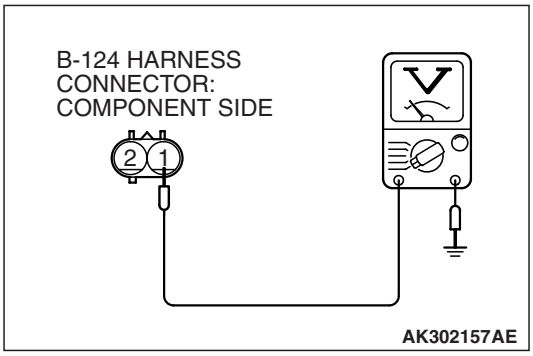

(3) Measure the voltage between terminal No. 1 and ground.
- Voltage should be battery positive voltage.

(4) Turn the ignition switch to the "LOCK" (OFF) position.

Q: Is battery positive voltage (approximately 12 volts) present?

YES : Go to Step 5.
NO : Go to Step 4.

STEP 4. Check harness connector B-12X at MFI relay for damage.

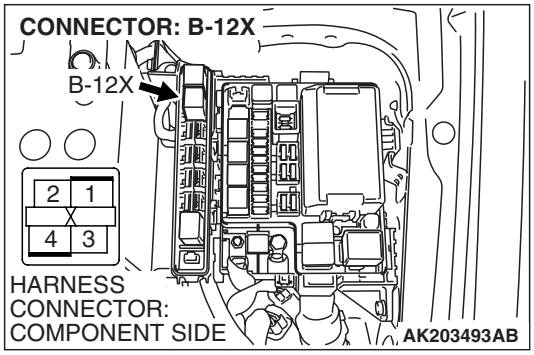

Q: Is the harness connector in good condition?

YES : Check harness connector C-105 at intermediate connector for damage, and repair or replace as required. Refer to GROUP 00E, Harness Connector Inspection P.00E-2. If intermediate connector is in good condition, repair harness wire between MFI relay connector B-12X (terminal No. 4) and oil feeder control valve connector B-124 (terminal No. 1) because of open circuit or short circuit to ground. Then go to Step 12.

NO : Repair or replace it. Refer to GROUP 00E, Harness Connector Inspection P.00E-2. Then go to Step 12.

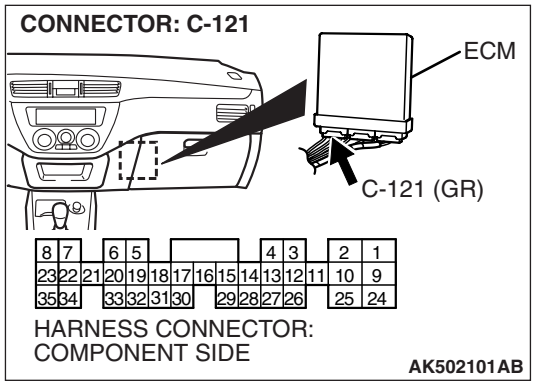

STEP 5. Measure the power supply voltage at ECM connector C-121 by backprobing.

(1) Do not disconnect the connector C-121.
(2) Turn the ignition switch to the "ON" position.

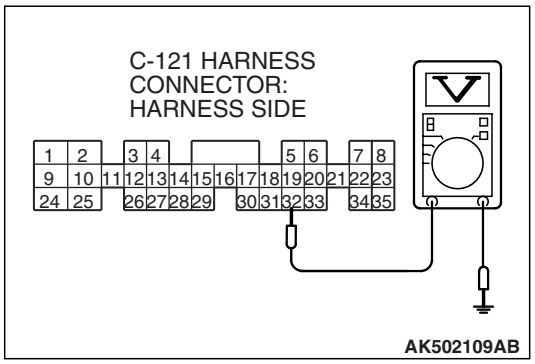

(3) Measure the voltage between terminal No. 32 and ground by backprobing.
- Voltage should be battery positive voltage.

(4) Turn the ignition switch to the "LOCK" (OFF) position.

Q: Is battery positive voltage (approximately 12 volts) present?

YES : Go to Step 8.
NO : Go to Step 6.

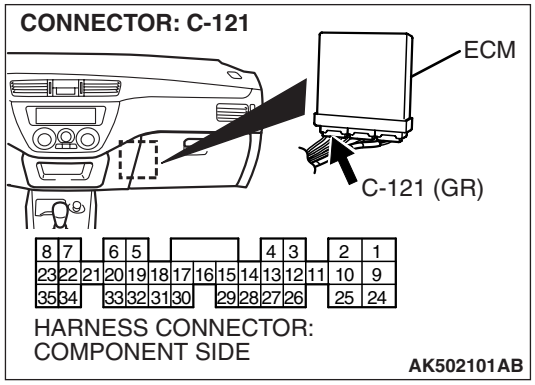

STEP 6. Check harness connector C-121 at ECM for damage.

Q: Is the harness connector in good condition?

YES : Go to Step 7.
NO : Repair or replace it. Refer to GROUP 00E, Harness Connector Inspection P.00E-2. Then go to Step 12.

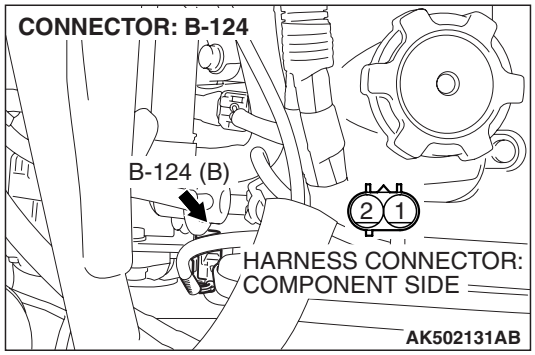

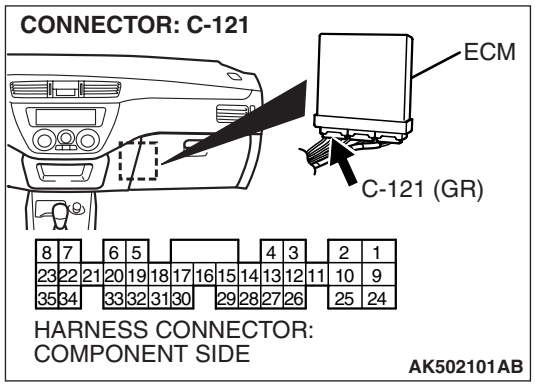

STEP 7. Check for open circuit and short circuit to ground between oil feeder control valve connector B-124 (terminal No. 2) and ECM connector C-121 (terminal No. 32).

Q: Is the harness wire in good condition?

YES : Replace the ECM. Then go to Step 12.

NO : Repair it. Then go to Step 12.

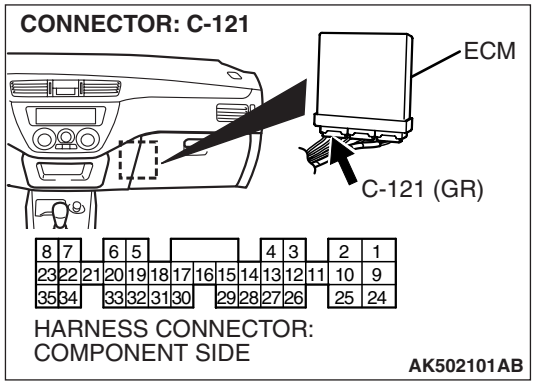

STEP 8. Check harness connector C-121 at ECM for damage.

Q: Is the harness connector in good condition?

YES : Go to Step 9.

NO : Repair or replace it. Refer to GROUP 00E, Harness Connector Inspection P.00E-2. Then go to Step 12.

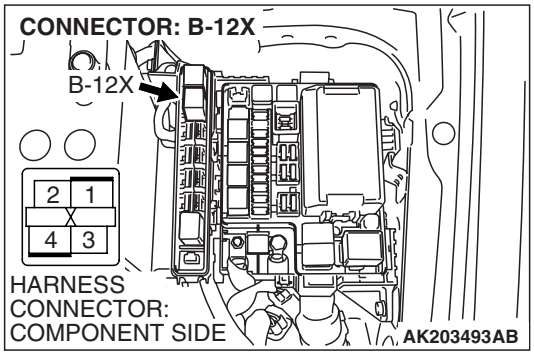

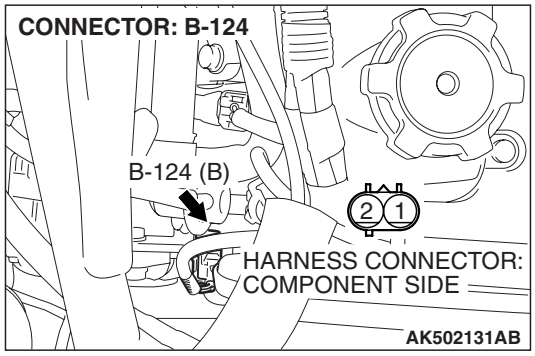

STEP 9. Check for harness damage between MFI relay connector B-12X (terminal No. 4) and oil feeder control valve connector B-124 (terminal No. 1).

Q: Is the harness wire in good condition?

YES : Go to Step 10.

NO : Repair it. Then go to Step 12.

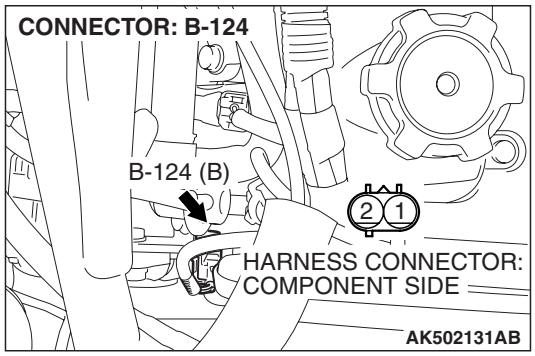

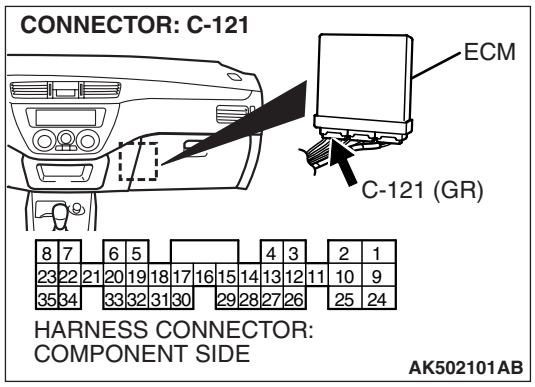

STEP 10. Check for harness damage between oil feeder control valve connector B-124 (terminal No. 2) and ECM connector C-121 (terminal No. 32).

Q: Is the harness wire in good condition?

YES : Go to Step 11.

NO : Repair it. Then go to Step 12.

STEP 11. Check the trouble symptoms.

(1) Carry out test drive with the drive cycle pattern. Refer to Diagnostic Function –OBD-II Drive Cycle –Pattern 23 P.13A-12.

(2) Check the diagnostic trouble code (DTC).

Q: Is DTC P1021 set?

YES : Replace the ECM. Then go to Step 12.

NO : It can be assumed that this malfunction is intermittent. Refer to GROUP 00, How to Use Troubleshooting/Inspection Service Points –How to Cope with Intermittent Malfunctions P.00-13.

STEP 12. Test the OBD-II drive cycle.

(1) Carry out test drive with the drive cycle pattern. Refer to Diagnostic Function –OBD-II Drive Cycle –Pattern 23 P.13A-12.

(2) Check the diagnostic trouble code (DTC).

Q: Is DTC P1021 set?

YES : Retry the troubleshooting.

NO : The inspection is complete.

DTC P1530: A/C1 Switch Circuit Intermittent

TECHNICAL DESCRIPTION

- The A/C-ECU sends the "ON" signal of the A/C to the ECM.
- The ECM receives the "ON" signal sent by the A/C-ECU, and turns the A/C relay to "ON" position.

DTC SET CONDITIONS

Check Condition

- Engine is running.

Judgement Criterion

- The A/C switch repeats on-off switches 255 times per second.

TROUBLESHOOTING HINTS (The most likely causes for this code to be set are:)

- A/C-ECU failed.

DIAGNOSIS

Required Special Tools:

- MB991958: Scan tool (M.U.T.-III Sub Assembly)
  - MB991824: V.C.I.
  - MB991827: USB Cable
  - MB991911: Main Harness B

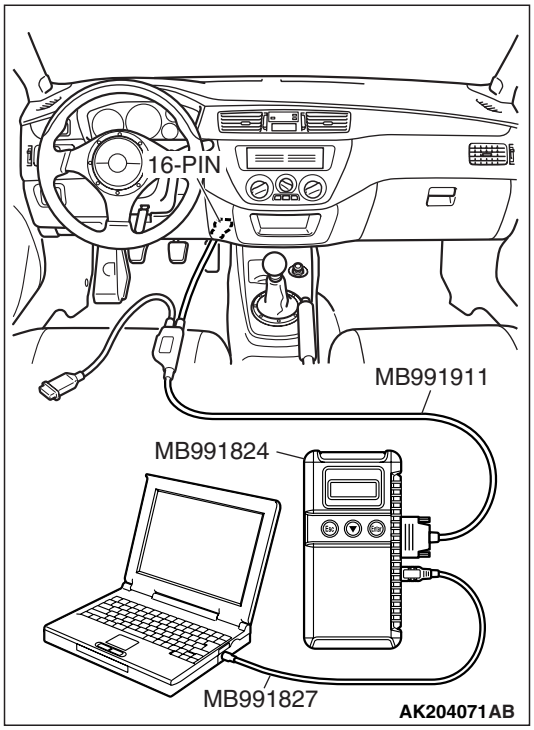

STEP 1. Using scan tool MB991958, read the diagnostic trouble code (DTC)

⚠ CAUTION

To prevent damage to scan tool MB991958, always turn the ignition switch to the "LOCK"(OFF) position before connecting or disconnecting scan tool MB991958.

(1) Connect scan tool MB991958 to the data link connector.
(2) Turn the ignition switch to the "ON" position.
(3) After the DTC has been deleted, read the DTC again.
(4) Turn the ignition switch to the "LOCK"(OFF) position.

Q: Is DTC P1530 set?

YES : Replace the A/C-ECU.

NO : It can be assumed that this malfunction is intermittent. Refer to GROUP 00, How to Use Troubleshooting/Inspection Service Points –How to Cope with Intermittent Malfunctions P.00-13.

DTC P1603: Battery Backup Line Malfunction

Battery Backup Circuit

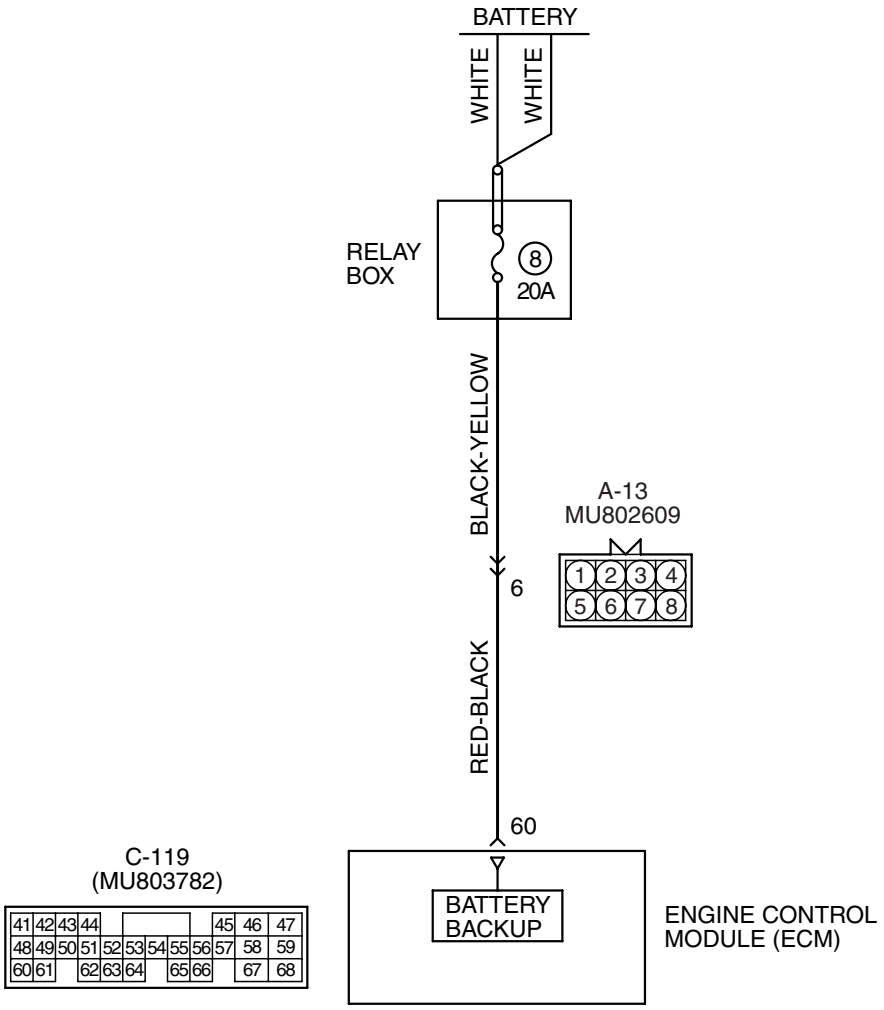

AK502087

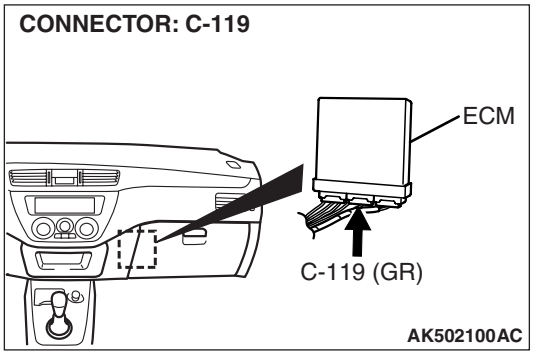

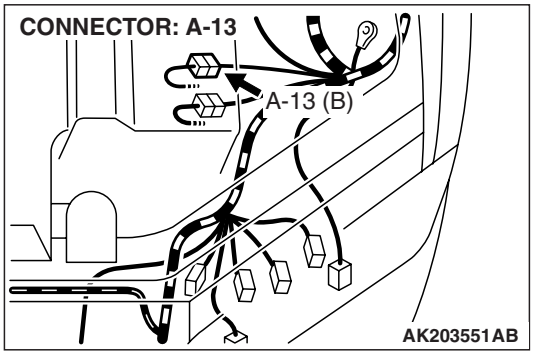

TECHNICAL DESCRIPTION

- The ECM is checks the open circuit of battery backup line.

NOTE: When the system detects an open circuit in the battery backup line, it makes 1 failure judgment of other diagnostic trouble codes (DTCs).

TSB Revision

DESCRIPTIONS OF MONITOR METHODS

- Battery backup line voltage is under specified value.

MONITOR EXECUTION

- Continuous

MONITOR EXECUTION CONDITIONS (Other monitor and Sensor)

Other Monitor (There is no temporary DTC stored in memory for the item monitored below)

- Not applicable

Sensor (The sensor below is determined to be normal)

- Not applicable

DTC SET CONDITIONS

Logic Flow Chart

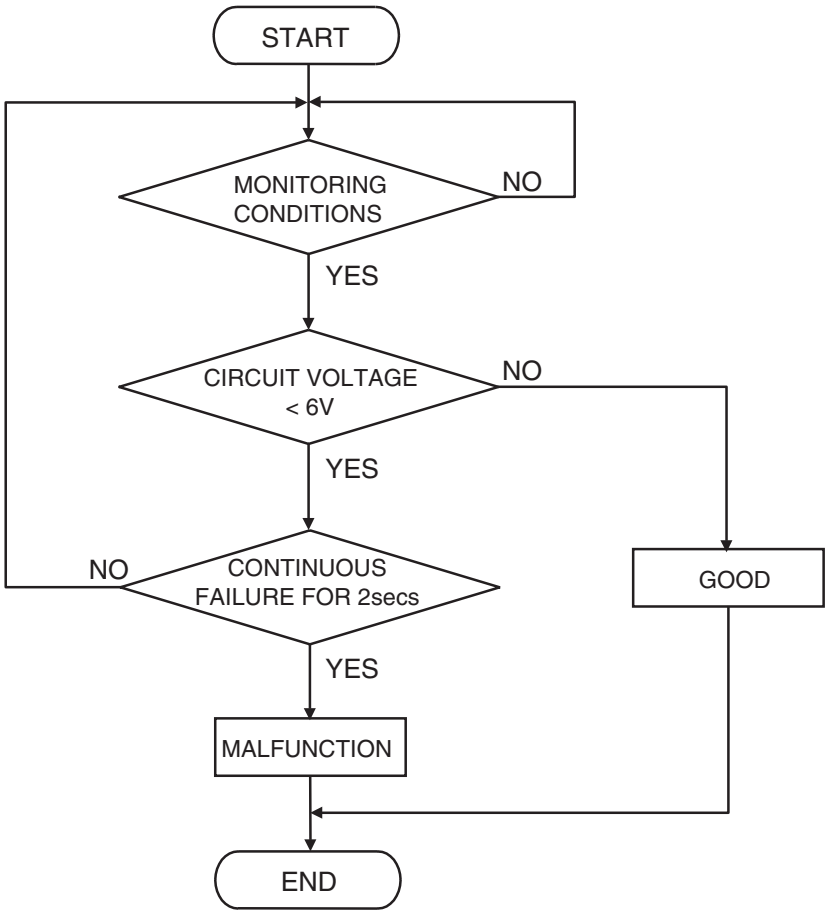

AK301454

Check Conditions

- Starting sequence was completed.
- Battery positive voltage is higher than 10 volts.

Judgement Criterion

- Battery backup line voltage has continued to be 6 volts or lower for 2 seconds.

OBD-II DRIVE CYCLE PATTERN

None.

TROUBLESHOOTING HINTS (The most likely causes for this code to be set are:)

- Open or shorted battery backup line, harness damage, or connector damage.
- ECM failed.

DIAGNOSIS

Required Special Tools:

- MB991958: Scan Tool (M.U.T.-III Sub Assembly)
  - MB991824: V.C.I.
  - MB991827: USB Cable
  - MB991911: Main Harness B

STEP 1. Using scan tool MB991958, read the diagnostic trouble code (DTC).

⚠ CAUTION

To prevent damage to scan tool MB991958, always turn the ignition switch to the "LOCK" (OFF) position before connecting or disconnecting scan tool MB991958.

(1) Connect scan tool MB991958 to the data link connector.
(2) Turn the ignition switch to the "ON" position.
(3) Erase the DTC.
(4) Start the engine and run it at idle.
(5) Read the DTC.
(6) Turn the ignition switch to the "LOCK" (OFF) position.

Q: Is DTC P1603 set?

YES : Go to Step 2.
NO : The inspection is complete.

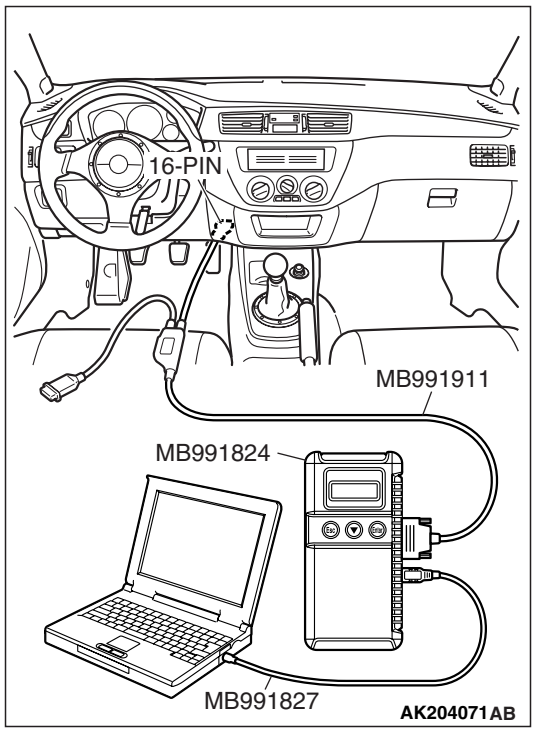

STEP 2. Measure the backup power supply voltage at ECM connector C-119 by backprobing.

(1) Do not disconnect the ECM connector C-119.

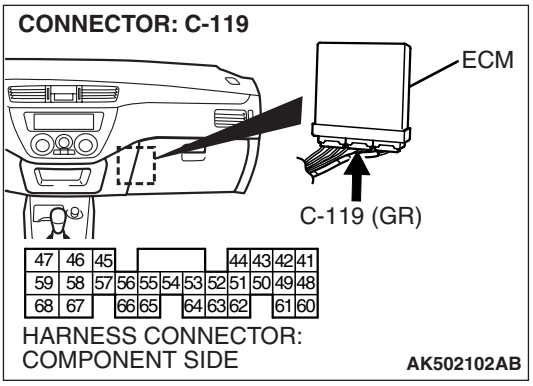

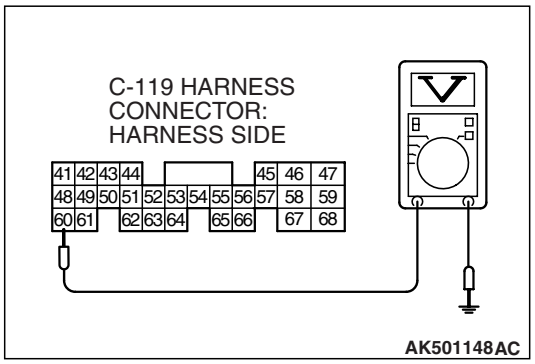

(2) Measure the voltage between terminal No. 60 and ground by backprobing.
- Voltage should be battery positive voltage.

Q: Is battery positive voltage (approximately 12 volts) present?

YES : Go to Step 5.

NO : Go to Step 3.

STEP 3. Measure the backup power supply voltage at ECM harness side connector C-119.

(1) Disconnect the ECM connector C-119 and measure at the harness side.

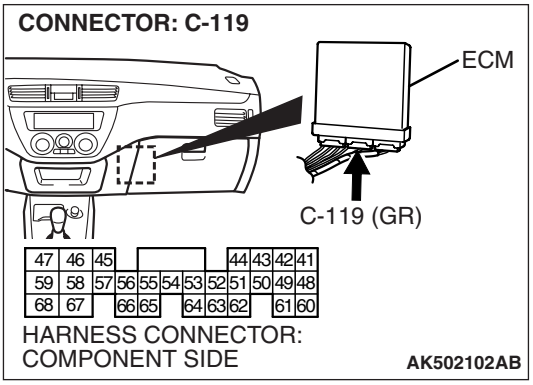

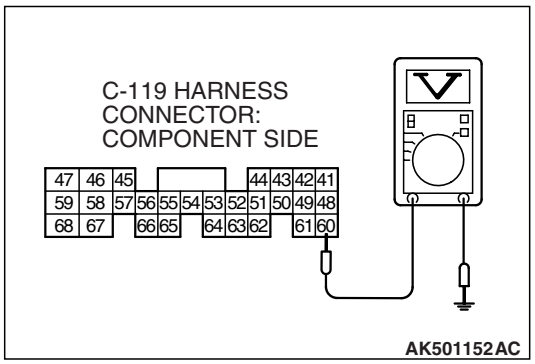

(2) Measure the voltage between terminal No. 60 and ground.
- Voltage should be battery positive voltage.

Q: Is battery positive voltage (approximately 12 volts) present?

YES : Go to Step 4.

NO : Check connector A-13 at intermediate connector for damage, and repair or replace as required. Refer to GROUP 00E, Harness Connector Inspection P.00E-2. If intermediate connector are in good condition, repair harness wire between relay box (fuse 8) and ECM connector C-119 (terminal No. 60) because of open circuit or short circuit to ground. Then go to Step 6.

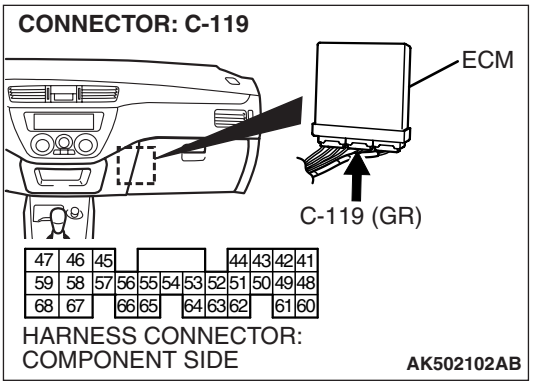

STEP 4. Check harness connector C-119 at ECM for damage.

Q: Is the harness connector in good condition?

YES : Check connector A-13 at intermediate connector for damage, and repair or replace as required. Refer to GROUP 00E, Harness Connector Inspection P.00E-2. If intermediate connector are in good condition, repair harness wire between relay box (fuse 8) and ECM connector C-119 (terminal No. 60) because of harness damage. Then go to Step 6.

NO : Repair or replace it. Refer to GROUP 00E, Harness Connector Inspection P.00E-2. Then go to Step 6.

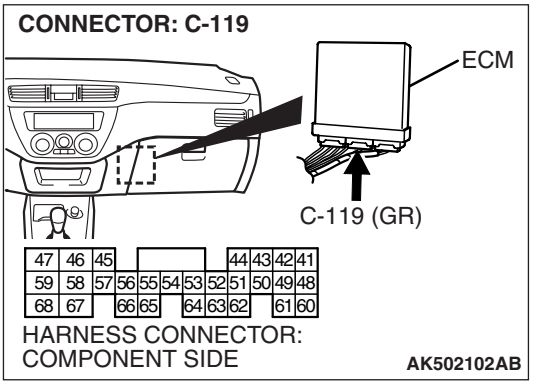

STEP 5. Check harness connector C-119 at ECM for damage.

Q: Is the harness connector in good condition?

YES : Replace the ECM. Then go to Step 6.

NO : Repair or replace it. Refer to GROUP 00E, Harness Connector Inspection P.00E-2. Then go to Step 6.

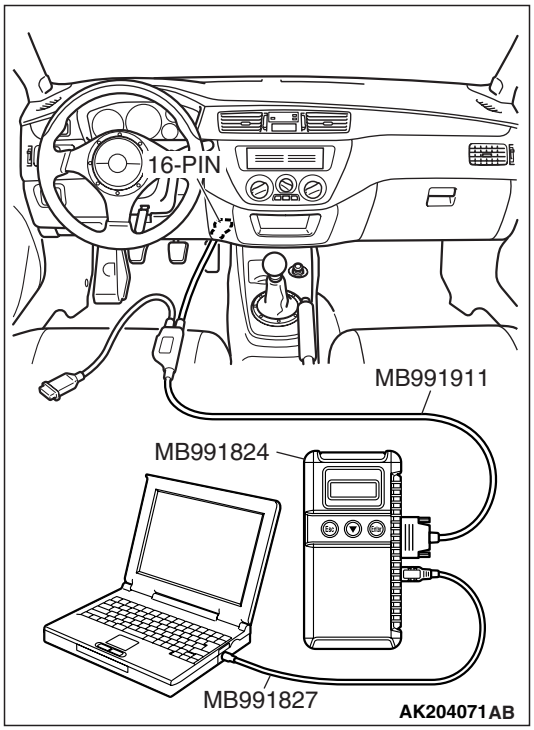

STEP 6. Using scan tool MB991958, read the diagnostic trouble code (DTC).

⚠ CAUTION

To prevent damage to scan tool MB991958, always turn the ignition switch to the "LOCK" (OFF) position before connecting or disconnecting scan tool MB991958.

(1) Connect scan tool MB991958 to the data link connector.
(2) Turn the ignition switch to the "ON" position.
(3) Read the DTC.
(4) Turn the ignition switch to the "LOCK" (OFF) position.

Q: Is DTC P1603 set?

YES : Retry the troubleshooting.
NO : The inspection is complete.

DTC P2066: Fuel Level Sensor (sub) Circuit Range/Performance

Fuel Level Sensor Circuit

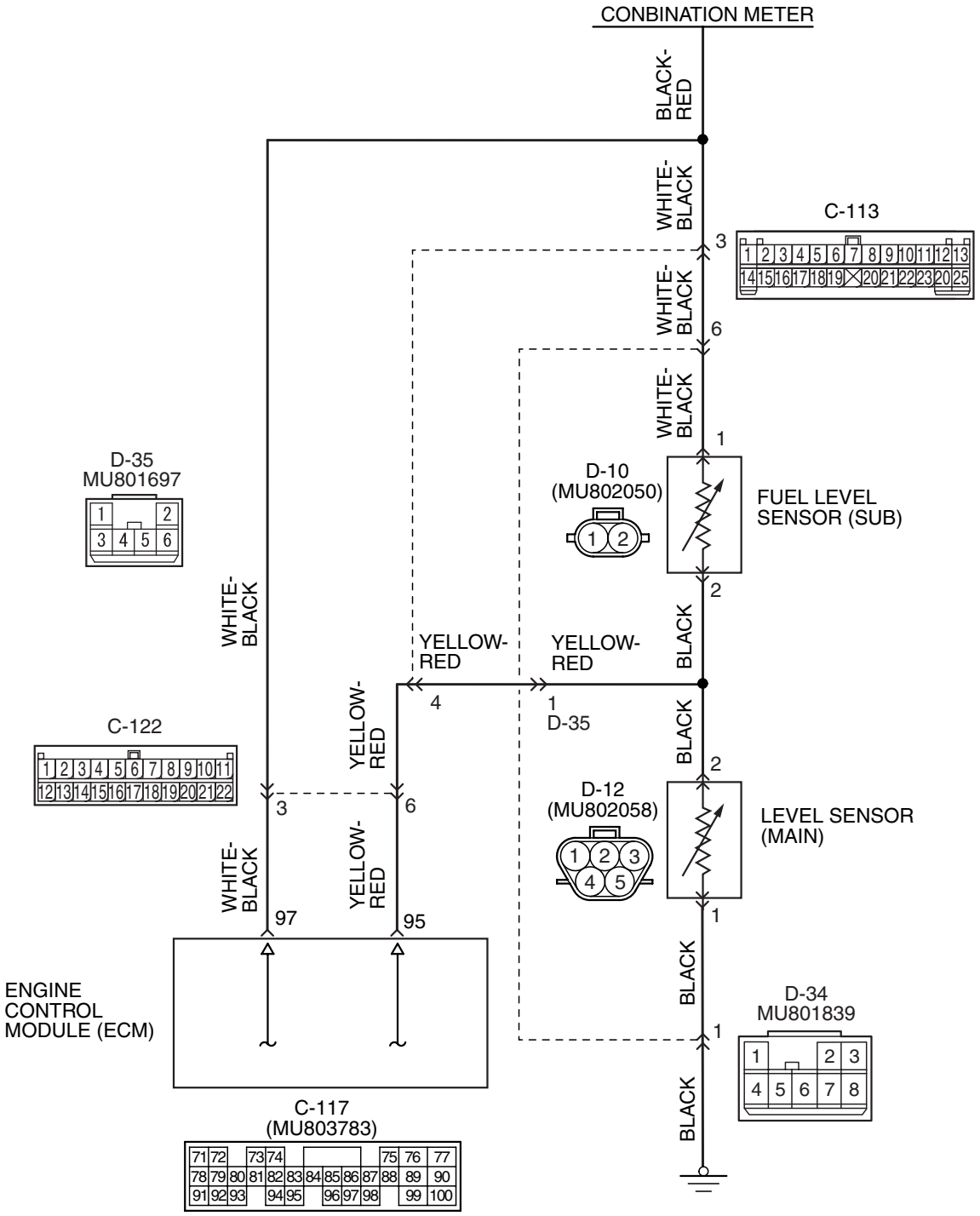

AK502079

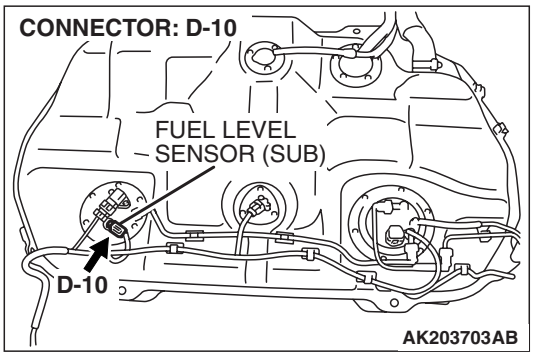

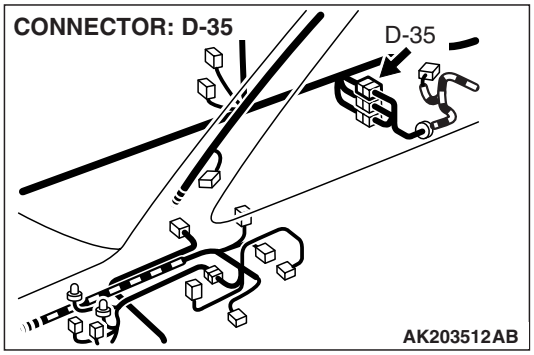

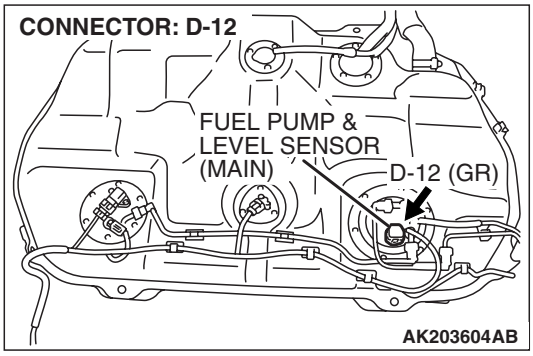

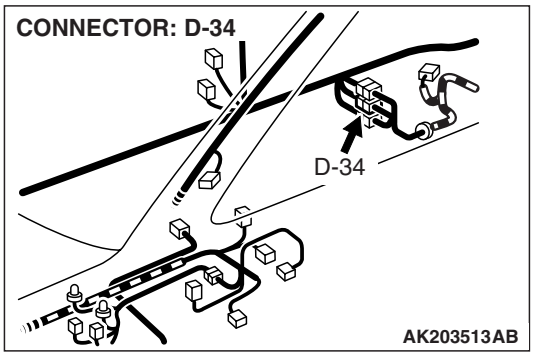

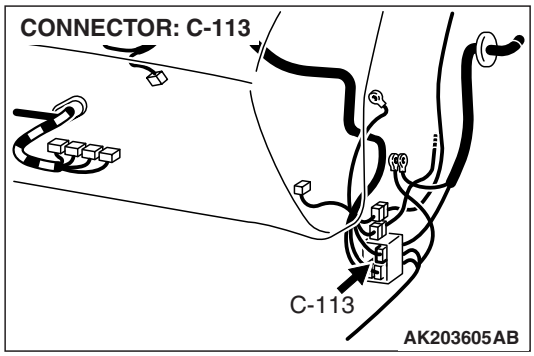

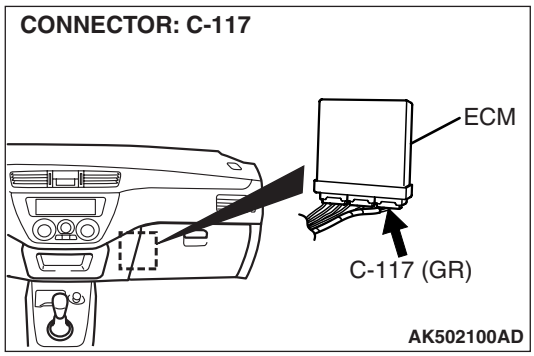

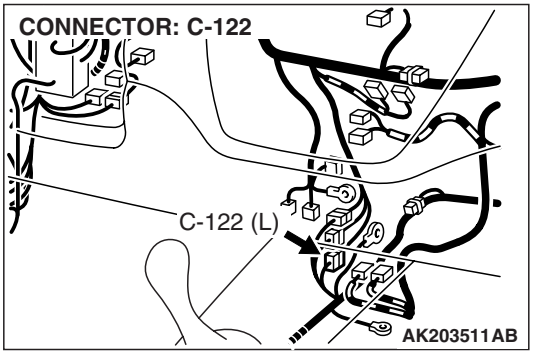

CIRCUIT OPERATION

- The fuel level sensor (sub) output voltage is input in ECM (terminal No. 97).

TECHNICAL DESCRIPTION

- Branch the output voltage from the fuel level sensor circuit, and input it into ECM.
- The ECM detects the amount of fuel left in the fuel tank with this signal, and also controls the fuel level warning light.

DESCRIPTIONS OF MONITOR METHODS

Detect malfunction if change of fuel level sensor output voltage is small when sum of fuel injection is large.

MONITOR EXECUTION

Continuous

MONITOR EXECUTION CONDITIONS (Other monitor and Sensor)

Other Monitor (There is no temporary DTC stored in memory for the item monitored below)

- Not applicable

Sensor (The sensor below is determined to be normal)

- Not applicable

DTC SET CONDITIONS

Logic Flow Chart

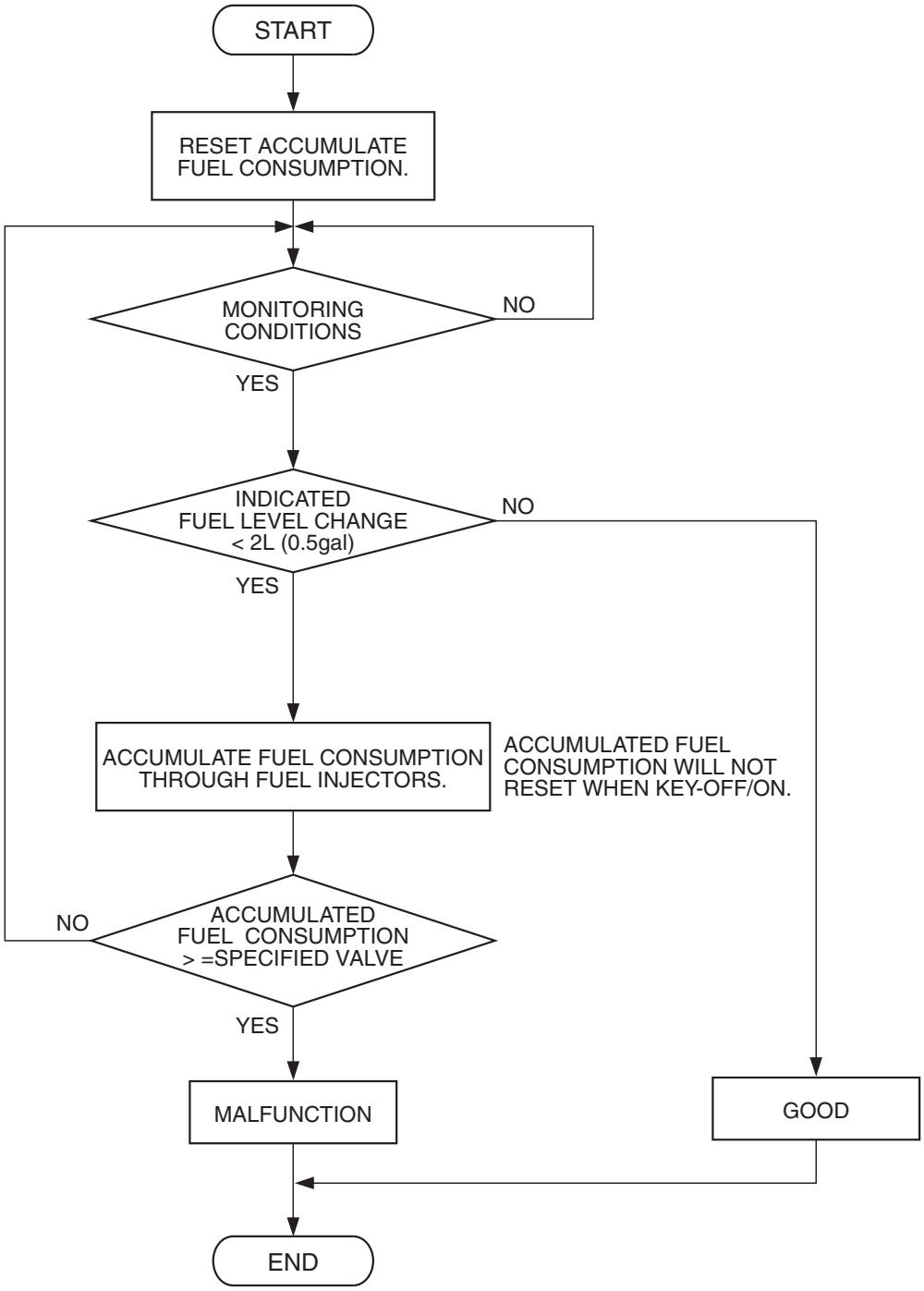

AK302040

Check Condition, Judgement Criterion

- When the fuel consumption calculated from the operation time of the injector amounts to 30 liters (7.9 gal), the diversity of the amount of fuel in tank calculated from the fuel level sensor is 2 liters (0.5 gal) or less.

OBD-II DRIVE CYCLE PATTERN

None.

TROUBLESHOOTING HINTS (The most likely causes for this code to be set are:)

- Fuel level sensor failed.
- Harness damage or connector damage in fuel level sensor circuit
- ECM failed.

DIAGNOSIS

STEP 1. Check fuel gauge.

Q: Is the fuel gauge functioning?

YES : Go to Step 2.

NO : Refer to GROUP 54A, Chassis Electrical – Combination Meters Assembly and Vehicle Speed Sensor –Equipment Diagnosis –Symptom Chart P.54A-48.

STEP 2. Check harness connector C-117 at ECM and harness connector D-10 at fuel level sensor (sub) for damage.

Q: Is the harness connector in good condition?

YES : Go to Step 3.

NO : Repair or replace it. Refer to GROUP 00E, Harness Connector Inspection P.00E-2. Then go to Step 5.

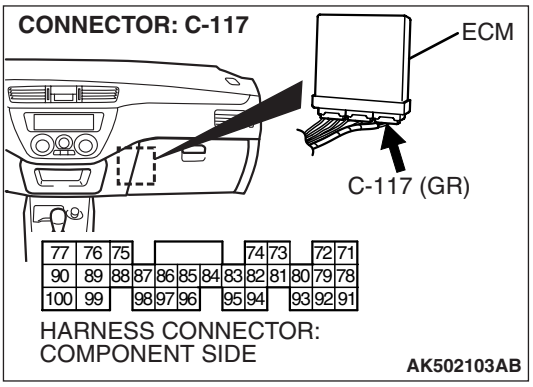

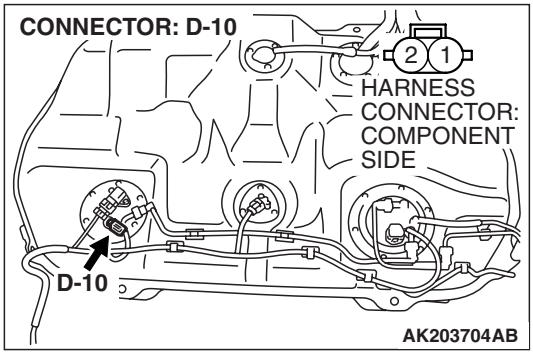

STEP 3. Check for harness damage between fuel level sensor (sub) connector D-10 (terminal No. 1) and ECM connector C-117 (terminal No. 97).

NOTE: Check harness after checking intermediate connectors C-122, C-113 and D-34. If intermediate connectors are damaged, repair or replace them. Refer to GROUP 00E, Harness Connector Inspection P.00E-2. Then go to Step 5.

Q: Is the harness wire in good condition?

YES : Go to Step 4.
NO : Repair it. Then go to Step 5.

STEP 4. Check the trouble symptoms.
Check that the fuel gauge operates correctly.

Q: Does the fuel gauge operate correctly?

YES : It can be assumed that this malfunction is intermittent. Refer to GROUP 00, How to Use Troubleshooting/Inspection Service Points –How to Cope with Intermittent Malfunctions P.00-13.
NO : Replace the ECM. Then go to Step 5.

STEP 5. Check the trouble symptoms.
Check that the fuel gauge operates correctly.

Q: Does the fuel gauge operate correctly?

YES : The inspection is complete.
NO : Retry the troubleshooting.

DTC P2195: Heated Oxygen Sensor Inactive (sensor 1)

TECHNICAL DESCRIPTION

- The ECM effects air/fuel ratio feedback control in accordance with the signals from the heated oxygen sensor (front).
- If the heated oxygen sensor (front) has deteriorated, corrections will be made by the heated oxygen sensor (rear).
- DTC P2195 becomes stored in memory if a failure is detected in the heated oxygen sensor (front).

DESCRIPTIONS OF MONITOR METHODS

Heated oxygen sensor (front) output voltage does not cross 0.5 volt within specified period.

MONITOR EXECUTION

Continuous

MONITOR EXECUTION CONDITIONS (Other monitor and Sensor)

Other Monitor (There is no temporary DTC stored in memory for the item monitored below)

- Heated oxygen sensor (front) monitor
- Misfire monitor

Sensor (The sensor below is determined to be normal)

- Engine coolant temperature sensor
- Intake air temperature sensor

DTC SET CONDITIONS

Logic Flow Chart

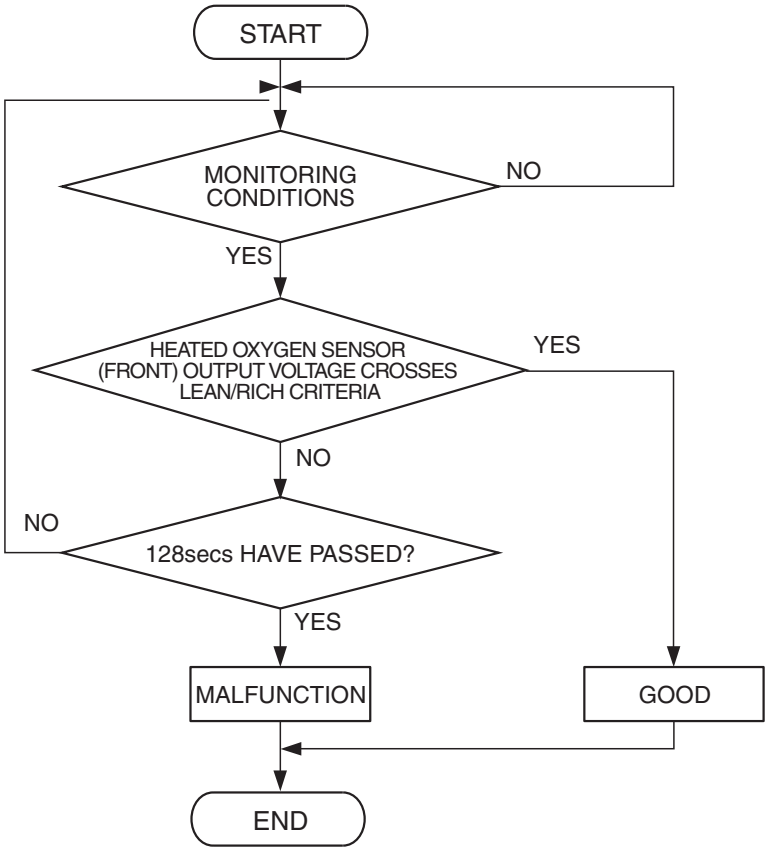

AK500047

Check Conditions

- 20 seconds or more have passed since the engine starting sequence was completed.
- Engine coolant temperature is higher than 7° C (45° F) or more.
- Intake air temperature is more than 10° C (50° F).

Judgment Criterion

- Heated oxygen sensor (front) output voltage is less than 0.5 volt for 128 seconds.

OBD-II DRIVE CYCLE PATTERN

Refer to Diagnostic Function –OBD-II Drive Cycle – Pattern 22 P.13A-12.

TROUBLESHOOTING HINTS (The most likely causes for this code to be set are:)

- Heated oxygen sensor (front) deteriorated.
- ECM failed.

DIAGNOSIS

Required Special Tools:

- MB991958: Scan Tool (M.U.T.-III Sub Assembly)
  - MB991824: V.C.I.
  - MB991827: USB Cable
  - MB991911: Main Harness B
- M991658: Test Harness

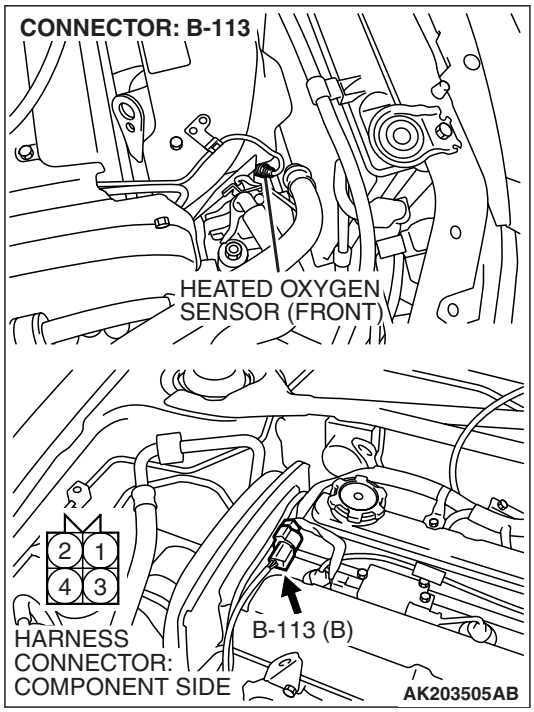

STEP 1. Check the heated oxygen sensor (front).

(1) Disconnect the heated oxygen sensor (front) connector C-22 and connect test harness special tool MB991658 to the connector on the heated oxygen sensor (front) side.
(2) Warm up the engine until engine coolant temperature reaches 80° C (176° F) or higher.
(3) Rev the engine for 5 minutes or more with the engine speed of 4,500 r/min.

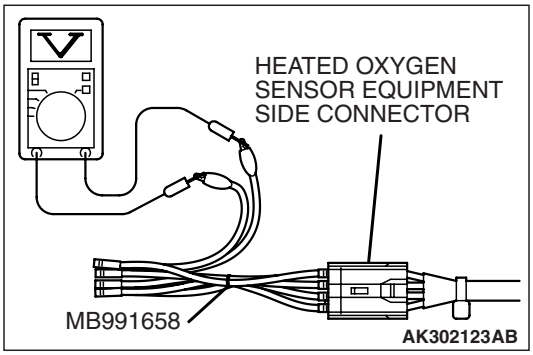

(4) Connect a digital voltage meter between terminal No. 1 and terminal No. 2.
(5) While repeatedly revving the engine, measure the heated oxygen sensor (front) output voltage.

Standard value: 0.6 – 1.0 volt

⚠ CAUTION

- **Be very careful when connecting the jumper wires; incorrect connection can damage the heated oxygen sensor (front).**
- **Be careful the heater can be damaged if a voltage beyond 8 volts is applied to the heated oxygen sensor (front) heater.**

  NOTE: If the sufficiently high temperature [of approximate 400°C (752°F) or more] is not reached although the heated oxygen sensor (front) is normal, the output voltage would be possibly low although the rich air/fuel ratio. Therefore, if the output voltage is low, use a jumper wire to connect the terminal No. 3 and the terminal No. 4 of the heated oxygen sensor (front) with the positive terminal and the negative terminal of 8 volts power supply respectively, then check again.

Q: Is the measured voltage between 0.6 and 1.0 volt?

YES : Go to Step 2.
NO : Replace the heated oxygen sensor (front). Then go to Step 3.

STEP 2. Test the OBD-II drive cycle.

(1) Carry out a test drive with the drive cycle pattern. Refer to Diagnostic Function –OBD-II Drive Cycle –Pattern 22 P.13A-12 .

Q: Is DTC P2195 set?

YES : Replace the ECM. Then go to Step 3.

NO : It can be assumed that this malfunction is intermittent. Refer to GROUP 00, How to Use Troubleshooting/Inspection Service Points –How to Cope with Intermittent Malfunctions P.00-13.

STEP 3. Test the OBD-II drive cycle.

(1) Carry out a test drive with the drive cycle pattern. Refer to Diagnostic Function –OBD-II Drive Cycle–Pattern 22 P.13A-12.

(2) Check the diagnostic trouble code (DTC).

Q: Is DTC P2195 set?

YES : Retry the troubleshooting.

NO : The inspection is complete.

DTC P2228: Barometric Pressure Circuit Low Input

Barometric Pressure Sensor Circuit

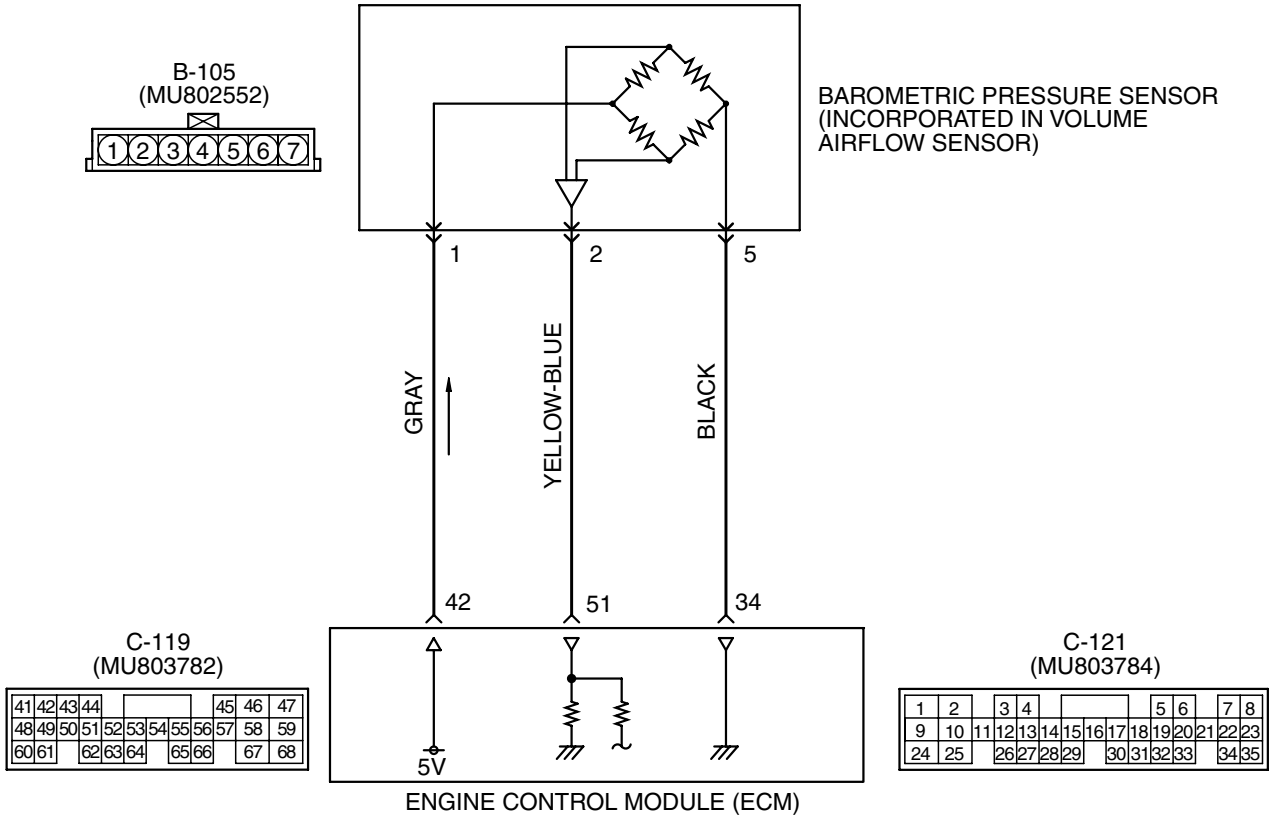

AK502088

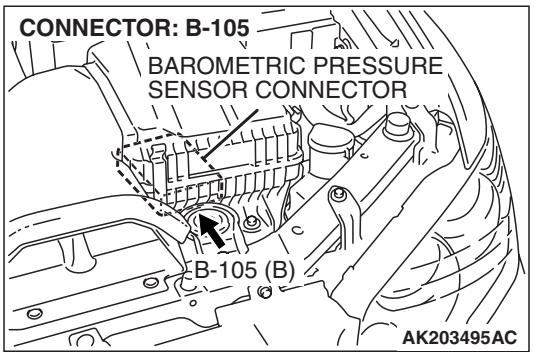

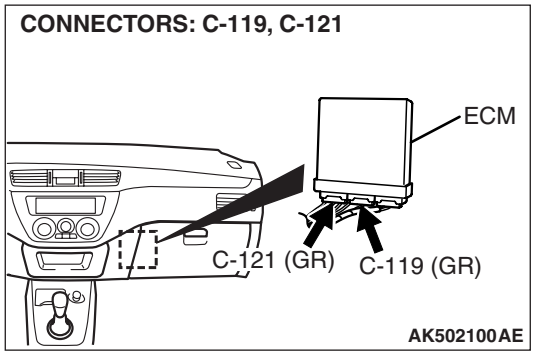

CIRCUIT OPERATION

- A 5-volt voltage is supplied to the barometric pressure sensor power terminal (terminal No. 1) from the ECM (terminal No. 42). The ground terminal (terminal No. 5) is grounded with ECM (terminal No. 34).
- A voltage that is proportional to the atmospheric pressure is sent to the ECM (terminal No. 51) from the barometric pressure sensor output terminal (terminal No. 2).

TECHNICAL DESCRIPTION

- The barometric pressure sensor outputs a voltage which corresponds to the barometric pressure.
- The ECM checks whether this voltage is within a specified range.

TSB Revision

DESCRIPTIONS OF MONITOR METHODS

- Barometric pressure sensor output voltage is out of reasonable barometric pressure range.

MONITOR EXECUTION

- Continuous

MONITOR EXECUTION CONDITIONS (Other monitor and Sensor)

Other Monitor (There is no temporary DTC stored in memory for the item monitored below)

- Not applicable

Sensor (The sensor below is determined to be normal)

- Not applicable

DTC SET CONDITIONS

Logic Flow Chart

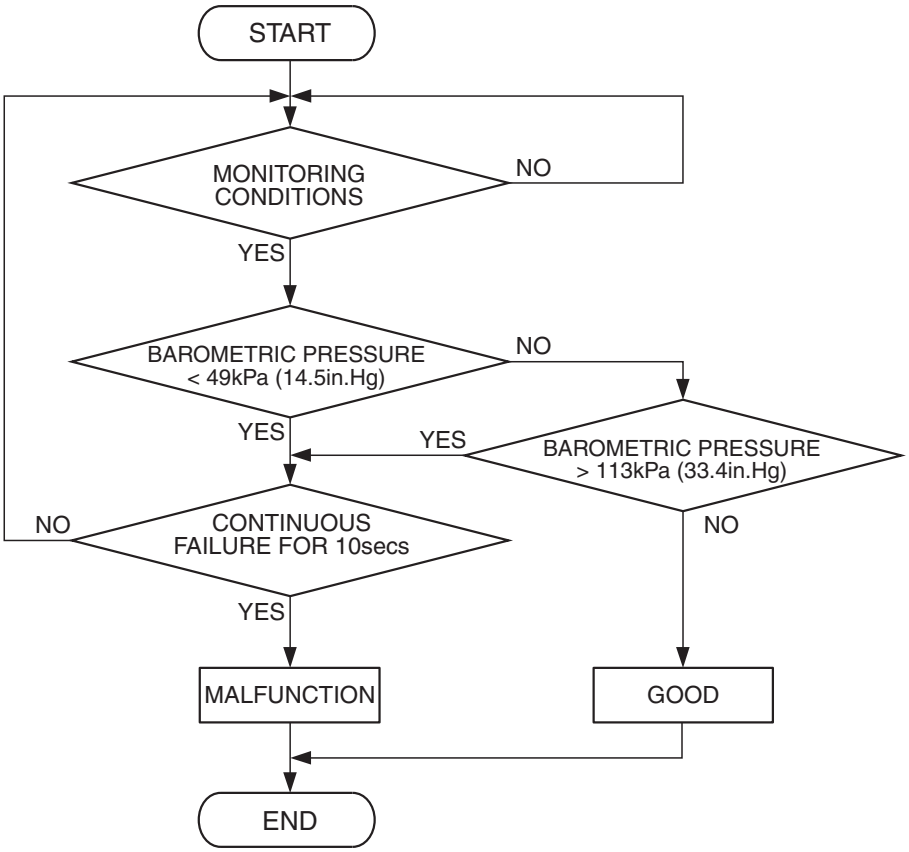

AK401781

Check Conditions

- 2 seconds or more have passed since the engine starting sequence was completed.
- Battery positive voltage is higher than 8 volts.

Judgement Criterion

- Barometric pressure sensor output has continued to be 49 kPa (14.5 in.Hg) or lower approximately 15,000 ft above sea level for 10 seconds.

OBD-II DRIVE CYCLE PATTERN

Refer to Diagnostic Function –OBD-II Drive Cycle – Pattern 23 P.13A-12.

TROUBLESHOOTING HINTS (The most likely causes for this code to be set are:)

- Barometric pressure sensor failed.
- Open or shorted barometric pressure sensor circuit, harness damage, or connector damage.
- ECM failed.

DIAGNOSIS

Required Special Tools:

- MB991958: Scan Tool (M.U.T.-III Sub Assembly)
  - MB991824: V.C.I.
  - MB991827: USB Cable
  - MB991911: Main Harness B

STEP 1. Using scan tool MB991958, check data list item 25: Barometric Pressure Sensor.

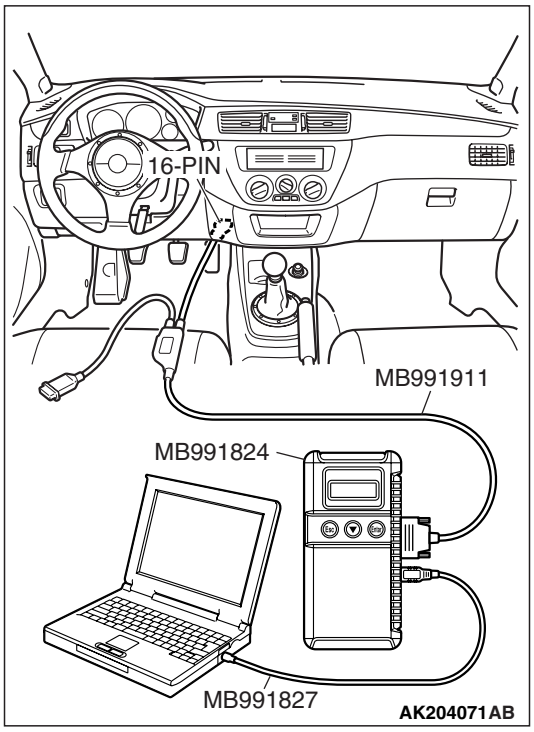

⚠ CAUTION

To prevent damage to scan tool MB991958, always turn the ignition switch to the "LOCK" (OFF) position before connecting or disconnecting scan tool MB991958.

(1) Connect scan tool MB991958 to the data link connector.
(2) Turn the ignition switch to the "ON" position.
(3) Set scan tool MB991958 to the data reading mode for item 25, Barometric Pressure Sensor.
  - When altitude is 0 m (0 foot), 101 kPa (29.8 in.Hg).
  - When altitude is 600 m (1,969 feet), 95 kPa (28.1 in.Hg).
  - When altitude is 1,200 m (3,937 feet), 88 kPa (26.0 in.Hg).
  - When altitude is 1,800 m (5,906 feet), 81 kPa (23.9 in.Hg).
(4) Turn the ignition switch to the "LOCK" (OFF) position.

Q: Is the sensor operating properly?

YES : It can be assumed that this malfunction is intermittent. Refer to GROUP 00, How to Use Troubleshooting/Inspection Service Points –How to Cope with Intermittent Malfunctions P.00-13.

NO : Go to Step 2.

STEP 2. Measure the sensor output voltage at barometric pressure sensor connector B-105 by backprobing.

(1) Do not disconnect connector B-105.
(2) Turn the ignition switch to the "ON" position.

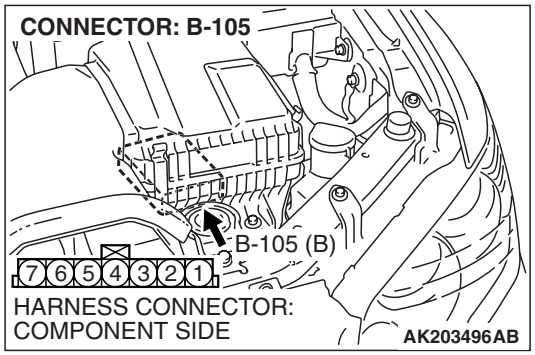

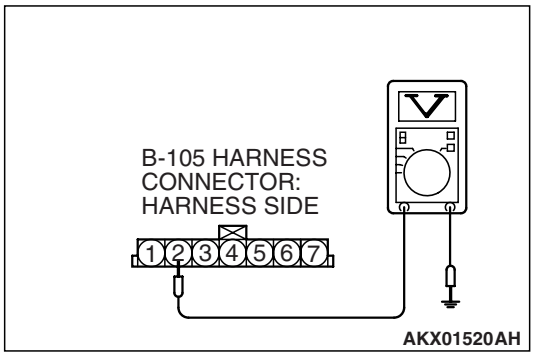

(3) Measure the voltage between terminal No. 2 and ground by backprobing.
- When altitude is 0 m (0 foot), voltage should measure 3.7 and 4.3 volts.
- When altitude is 600 m (1,969 feet), voltage should measure 3.4 and 4.0 volts.
- When altitude is 1,200 m (3,937 feet), voltage should measure 3.2 and 3.8 volts.
- When altitude is 1,800 m (5,906 feet), voltage should measure 2.9 and 3.5 volts.

(4) Turn the ignition switch to the "LOCK" (OFF) position.

Q: Is the measured voltage within the specified range?

YES : Go to Step 3.
NO : Go to Step 7.

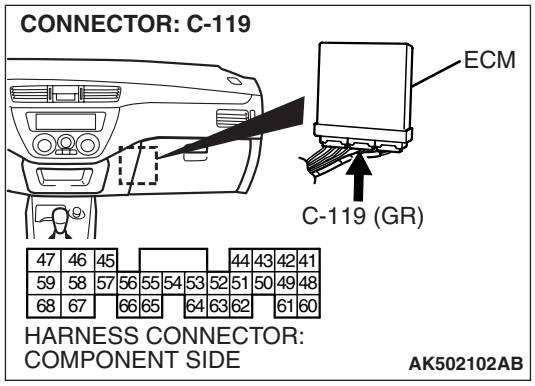

STEP 3. Measure the sensor output voltage at ECM connector C-119 by backprobing.

(1) Do not disconnect connector C-119.

(2) Turn the ignition switch to the "ON" position.

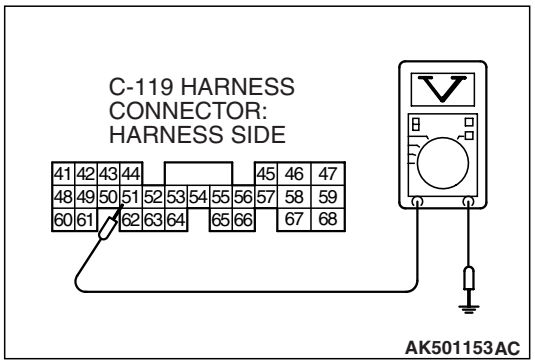

(3) Measure the voltage between terminal No. 51 and ground by backprobing.
- When altitude is 0 m (0 foot), voltage should measure between 3.7 and 4.3 volts.
- When altitude is 600 m (1,969 feet), voltage should measure between 3.4 and 4.0 volts.
- When altitude is 1,200 m (3,937 feet), voltage should measure between 3.2 and 3.8 volts.
- When altitude is 1,800 m (5,906 feet), voltage should measure between 2.9 and 3.5 volts.

(4) Turn the ignition switch to the "LOCK" (OFF) position.

Q: Is the measured voltage within the specified range?

YES : Go to Step 4.

NO : Go to Step 6.

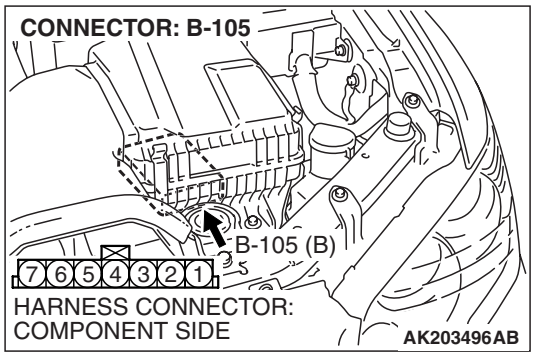

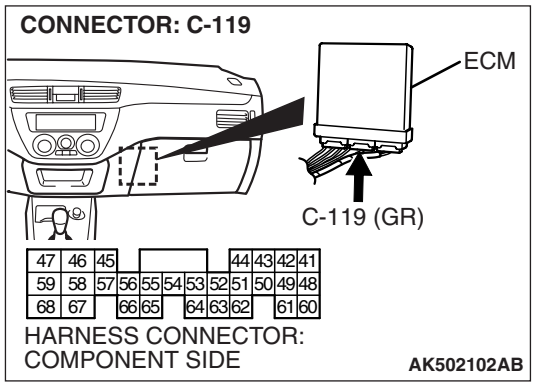

STEP 4. Check harness connector B-105 at the barometric pressure sensor and harness connector C-119 at ECM for damage.

Q: Is the harness connector in good condition?

YES : Go to Step 5.

NO : Repair or replace it. Refer to GROUP 00E, Harness Connector Inspection P.00E-2. Then go to Step 18.

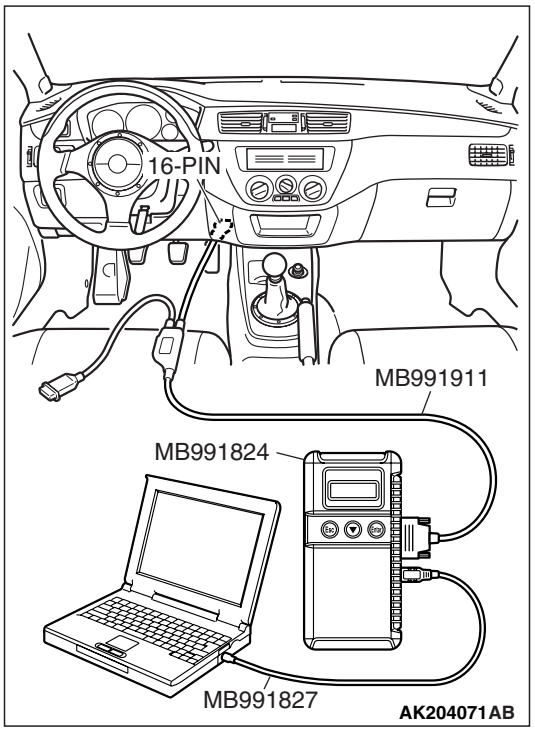

STEP 5. Using scan tool MB991958, check data list item 25: Barometric Pressure Sensor.

⚠ CAUTION

To prevent damage to scan tool MB991958, always turn the ignition switch to the "LOCK" (OFF) position before connecting or disconnecting scan tool MB991958.

(1) Connect scan tool MB991958 to the data link connector.
(2) Turn the ignition switch to the "ON" position.
(3) Set scan tool MB991958 to the data reading mode for item 25, Barometric Pressure Sensor.
- When altitude is 0 m (0 foot), 101 kPa (29.8 in.Hg).
- When altitude is 600 m (1,969 feet), 95 kPa (28.1 in.Hg).
- When altitude is 1,200 m (3,937 feet), 88 kPa (26.0 in.Hg).
- When altitude is 1,800 m (5,906 feet), 81 kPa (23.9 in.Hg).

(4) Turn the ignition switch to the "LOCK" (OFF) position.

Q: Is the sensor operating properly?

YES : It can be assumed that this malfunction is intermittent. Refer to GROUP 00, How to Use Troubleshooting/Inspection Service Points –How to Cope with Intermittent Malfunctions P.00-13.

NO : Replace the ECM. Then go to Step 18.

STEP 6. Check harness connector B-105 at the barometric pressure sensor and harness connector C-119 at ECM for damage.

Q: Is the harness connector in good condition?

YES : Repair harness wire between barometric pressure sensor connector B-105 (terminal No. 2) and ECM connector C-119 (terminal No. 51) because of open circuit or harness damage. Then go to Step 18.

NO : Repair or replace it. Refer to GROUP 00E, Harness Connector Inspection P.00E-2. Then go to Step 18.

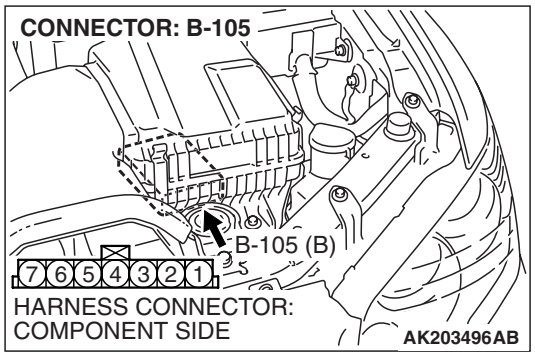

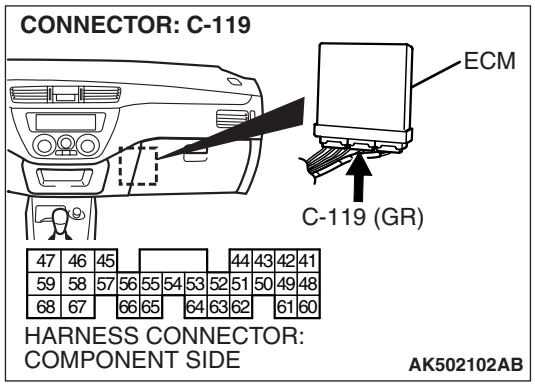

STEP 7. Measure the sensor supply voltage at barometric pressure sensor connector B-105 by backprobing.

(1) Do not disconnect connector B-105.

(2) Turn the ignition switch to the "ON" position.

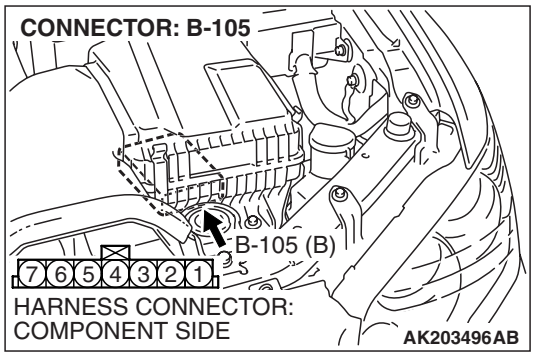

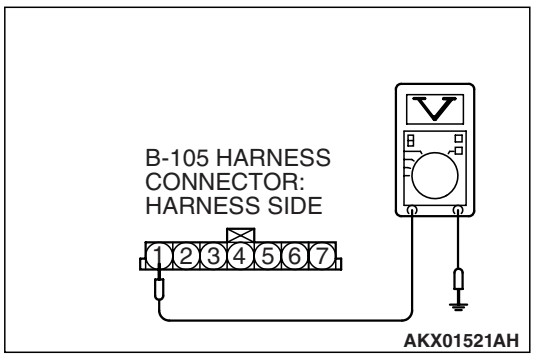

(3) Measure the voltage between terminal No. 1 and ground by backprobing.
- Voltage should be between 4.8 and 5.2 volts.

(4) Turn the ignition switch to the "LOCK" (OFF) position.

Q: Is the measured voltage between 4.8 and 5.2 volts?

YES : Go to Step 12.

NO : Go to Step 8.

STEP 8. Measure the sensor supply voltage at ECM connector C-119 by backprobing.

(1) Do not disconnect connector C-119.
(2) Turn the ignition switch to the "ON" position.

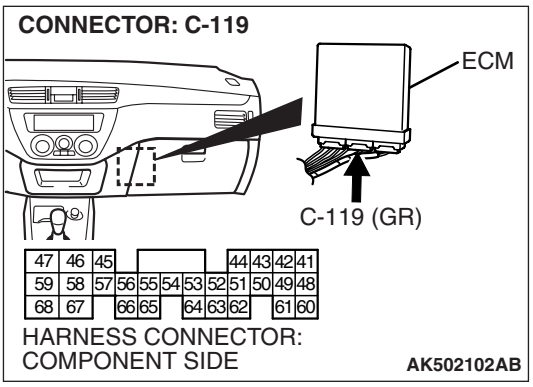

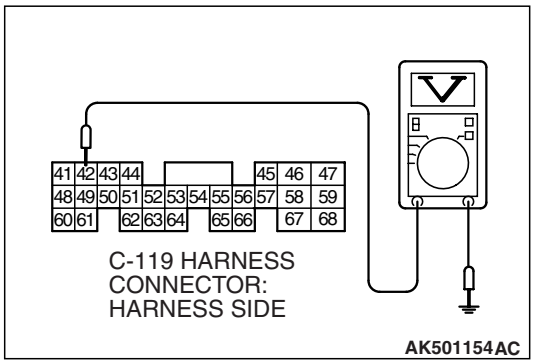

(3) Measure the voltage between terminal No. 42 and ground by backprobing.
- Voltage should be between 4.8 and 5.2 volts.

(4) Turn the ignition switch to the "LOCK" (OFF) position.

Q: Is the measured voltage between 4.8 and 5.2 volts?

YES : Go to Step 9.
NO : Go to Step 10.

STEP 9. Check harness connector B-105 at the barometric pressure sensor and harness connector C-119 at ECM for damage.

Q: Is the harness connector in good condition?

YES : Repair harness wire between barometric pressure sensor connector B-105 (terminal No. 1) and ECM connector C-119 (terminal No. 42) because of open circuit or harness damage. Then go to Step 18.
NO : Repair or replace it. Refer to GROUP 00E, Harness Connector Inspection P.00E-2. Then go to Step 18.

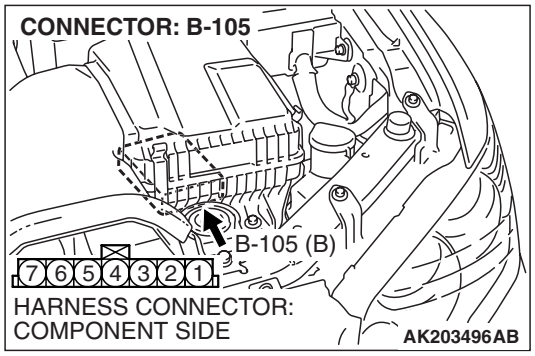

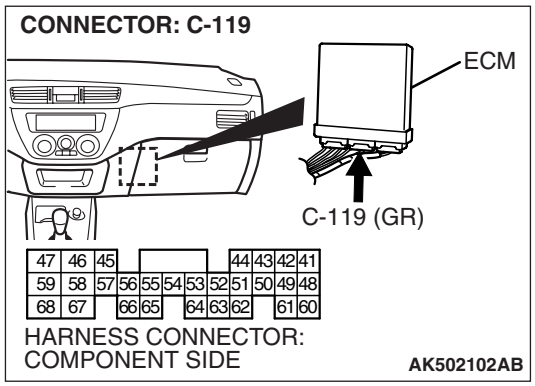

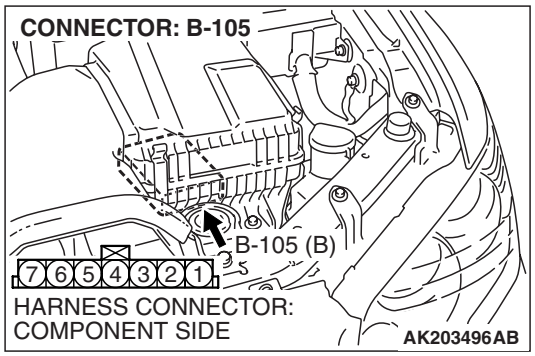

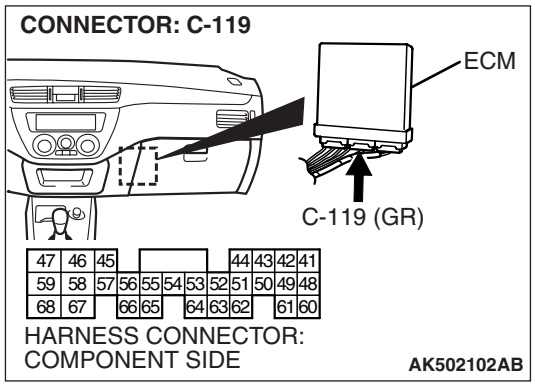

STEP 10. Check harness connector B-105 at the barometric pressure sensor and harness connector C-119 at ECM for damage.

Q: Is the harness connector in good condition?

YES : Go to Step 11.

NO : Repair or replace it. Refer to GROUP 00E, Harness Connector Inspection P.00E-2. Then go to Step 18.

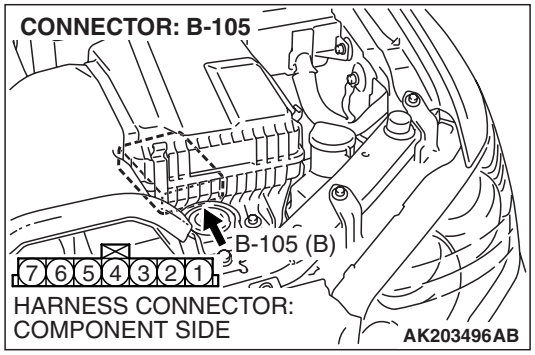

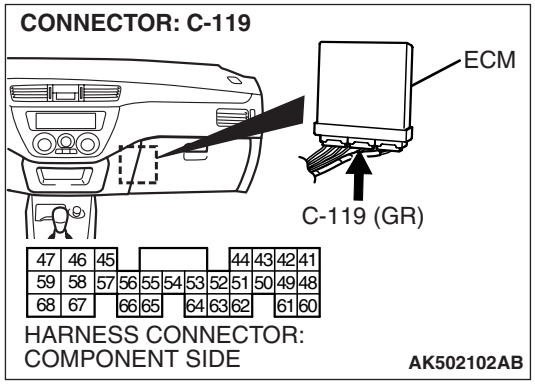

STEP 11. Check for short circuit to ground between barometric pressure sensor connector B-105 (terminal No. 1) and ECM connector C-119 (terminal No. 42).

Q: Is the harness wire in good condition?

YES : Replace the ECM. Then go to Step 18.

NO : Repair it. Then go to Step 18.

STEP 12. Measure the ground voltage at barometric pressure sensor connector B-105 by backprobing.

(1) Do not disconnect connector B-105.
(2) Turn the ignition switch to the "ON" position.

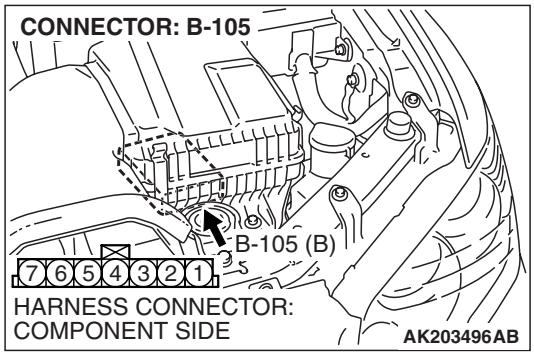

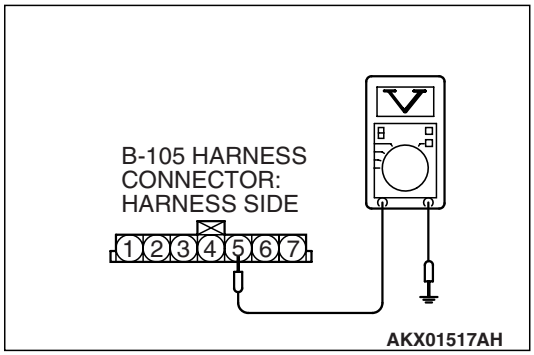

(3) Measure the voltage between terminal No. 5 and ground by backprobing.
- Voltage should be 0.5 volt or less.

(4) Turn the ignition switch to the "LOCK" (OFF) position.

Q: Is the measured voltage 0.5 volt or less?

YES : Go to Step 15.
NO : Go to Step 13.

STEP 13. Check harness connector B-105 at the barometric pressure sensor and harness connector C-121 at ECM for damage.

Q: Is the harness connector in good condition?

YES : Go to Step 14.
NO : Repair or replace it. Refer to GROUP 00E, Harness Connector Inspection P.00E-2. Then go to Step 18.

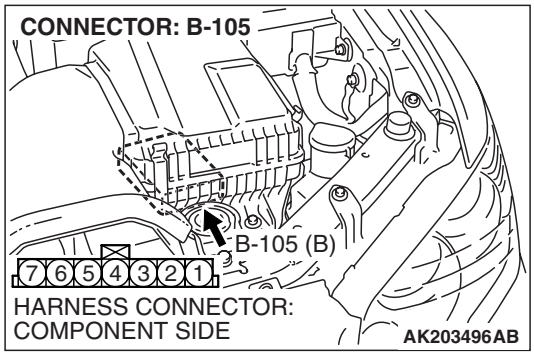

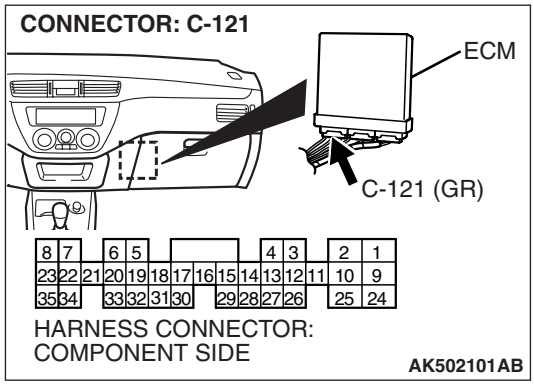

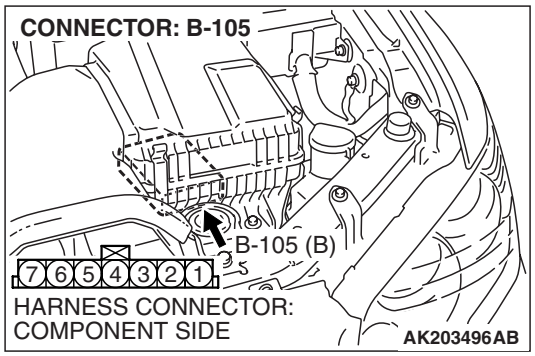

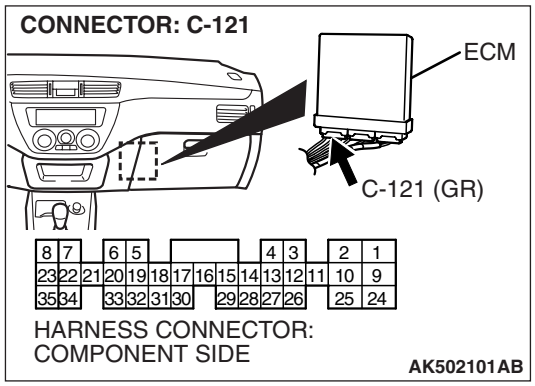

STEP 14. Check for harness damage between barometric pressure sensor connector B-105 (erminal No. 5) and ECM connector C-121 (terminal No. 34).

Q: Is the harness wire in good condition?

YES : Replace the ECM. Then go to Step 18.

NO : Repair it. Then go to Step 18.

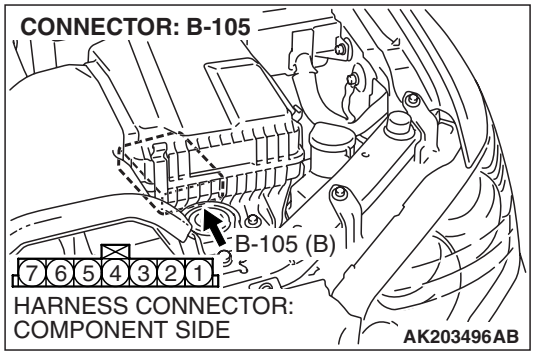

STEP 15. Check harness connector B-105 at barometric pressure sensor for damage.

Q: Is the harness connector in good condition?

YES : Go to Step 16.

NO : Repair or replace it. Refer to GROUP 00E, Harness Connector Inspection P.00E-2. Then go to Step 18.

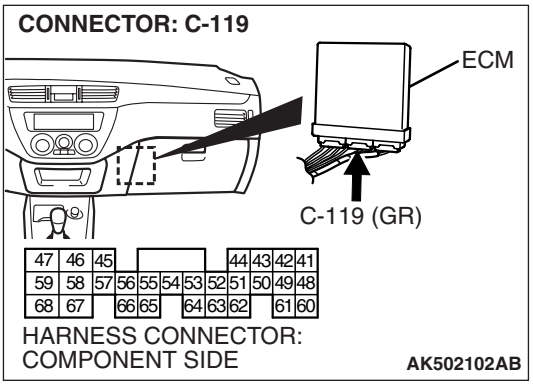

STEP 16. Check harness connector C-119 at ECM for damage.

Q: Is the harness connector in good condition?

YES : Go to Step 17.

NO : Repair or replace it. Refer to GROUP 00E, Harness Connector Inspection P.00E-2. Then go to Step 18.

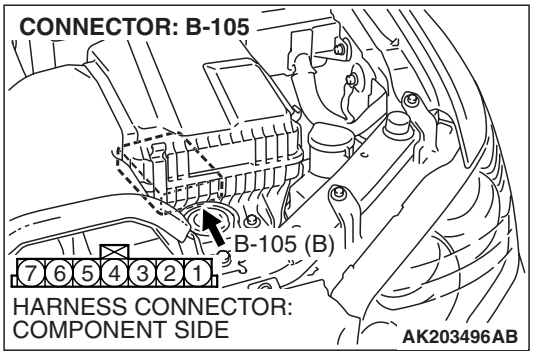

STEP 17. Check for short circuit to ground and harness damage between barometric pressure sensor connector B-105 (terminal No. 2) and ECM connector C-119 (terminal No. 51).

Q: Is the harness wire in good condition?

YES : Replace the volume airflow sensor. Then go to Step 18.

NO : Repair it. Then go to Step 18.

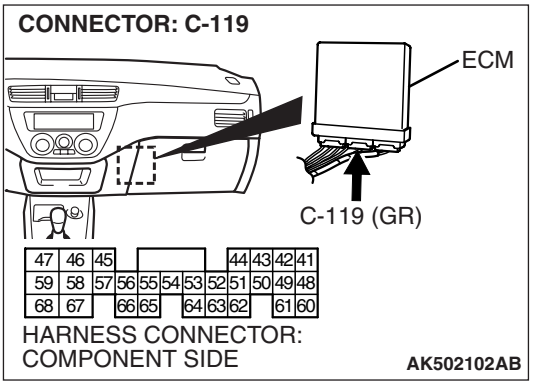

STEP 18. Test the OBD-II drive cycle.

(1) Carry out a test drive with the drive cycle pattern. Refer to GROUP 13A, Diagnostic Function –OBD-II Drive Cycle – Pattern 23 P.13A-12.

(2) Check the diagnostic trouble code (DTC).

Q: Is DTC P2228 set?

YES : Retry the troubleshooting.

NO : The inspection is complete.

DTC P2229: Barometric Pressure Circuit High Input

Barometric Pressure Sensor Circuit

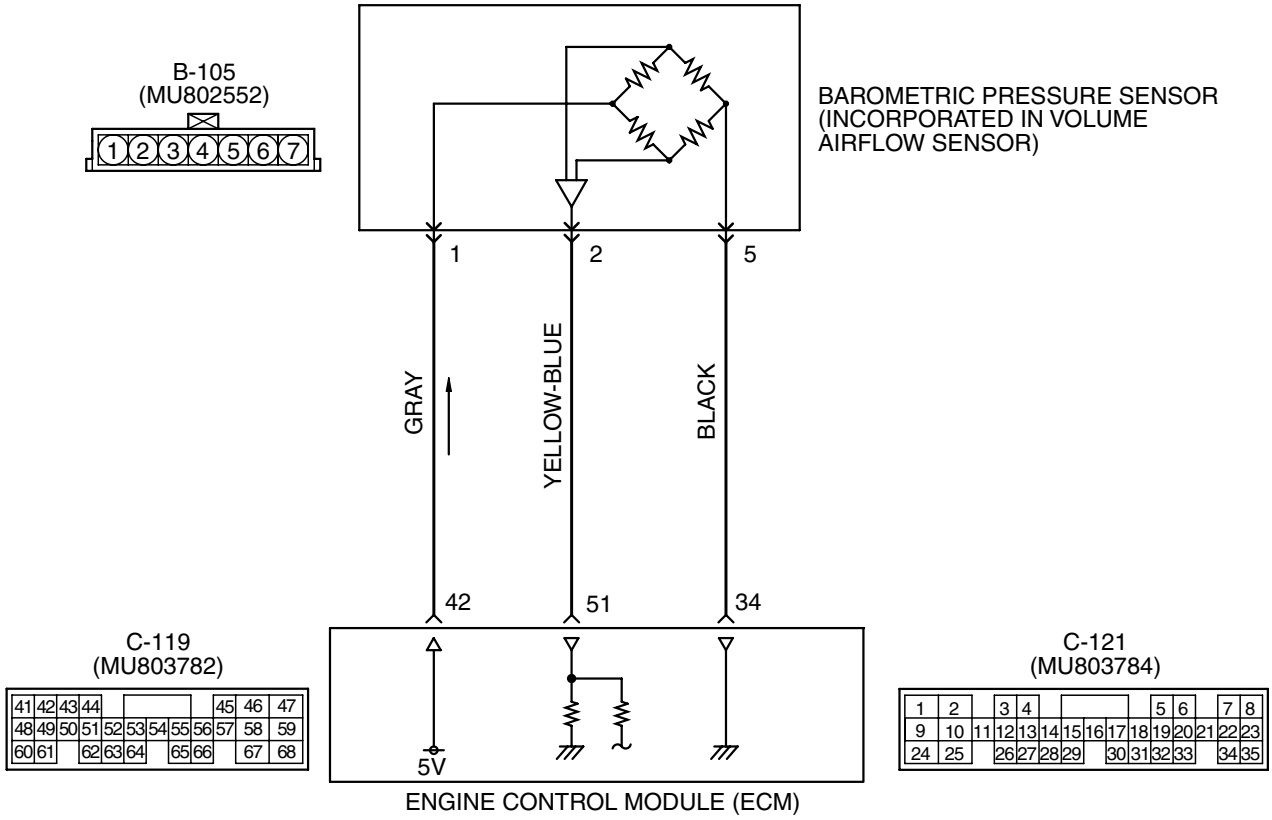

AK502088

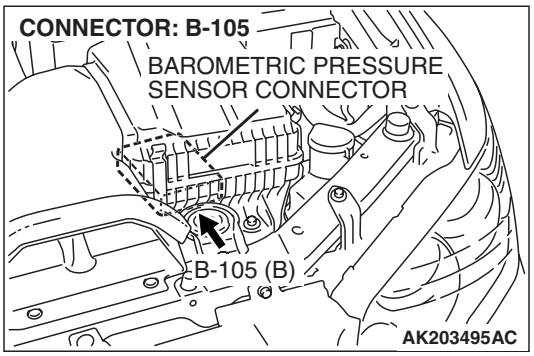

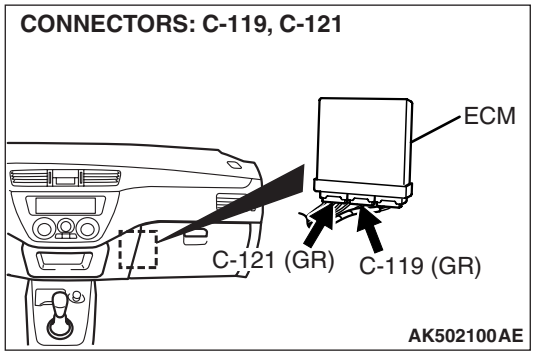

CIRCUIT OPERATION

- A 5-volt voltage is supplied to the barometric pressure sensor power terminal (terminal No. 1) from the ECM (terminal No. 42). The ground terminal (terminal No. 5) is grounded with ECM (terminal No. 34).
- A voltage that is proportional to the atmospheric pressure is sent to the ECM (terminal No. 51) from the barometric pressure sensor output terminal (terminal No. 2).

TECHNICAL DESCRIPTION

- The barometric pressure sensor outputs a voltage which corresponds to the barometric pressure.
- The ECM checks whether this voltage is within a specified range.

DESCRIPTIONS OF MONITOR METHODS

- Barometric pressure sensor output voltage is out of reasonable barometric pressure range.

MONITOR EXECUTION

- Continuous

MONITOR EXECUTION CONDITIONS (Other monitor and Sensor)

Other Monitor (There is no temporary DTC stored in memory for the item monitored below)

- Not applicable

Sensor (The sensor below is determined to be normal)

- Not applicable

DTC SET CONDITIONS

Logic Flow Chart

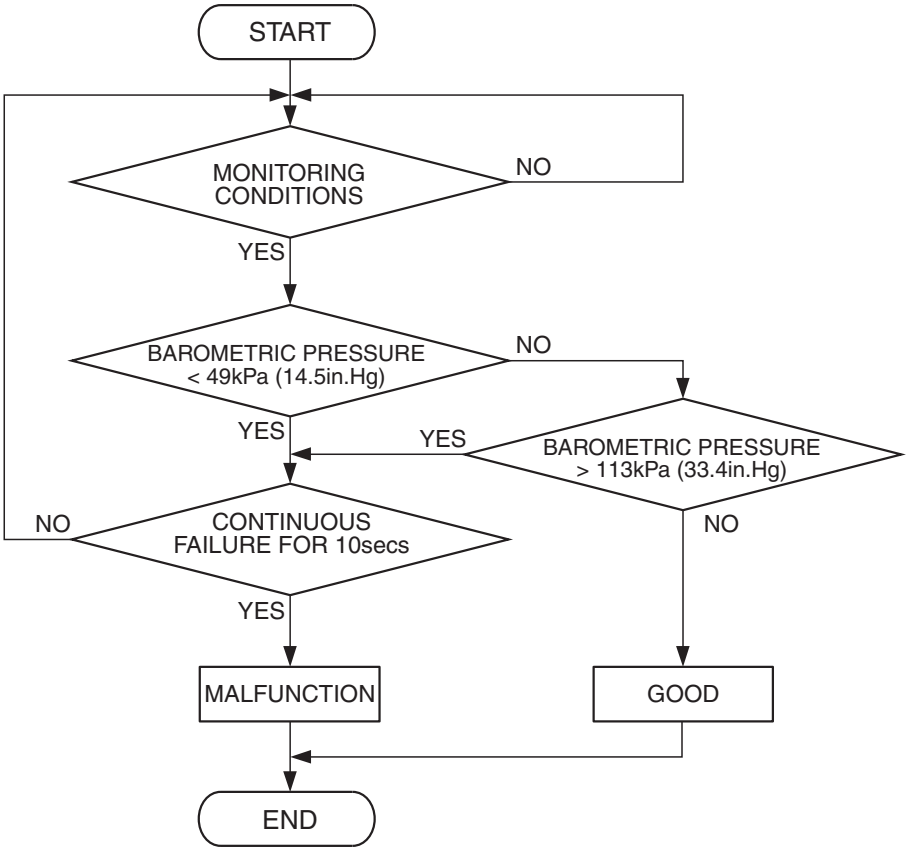

AK401781

Check Conditions

- 2 seconds or more have passed since the engine starting sequence was completed.
- Battery positive voltage is higher than 8 volts.

Judgement Criterion

- Barometric pressure sensor output has continued to be 113 kPa (33.4 in.Hg) or higher approximately 4,000 ft below sea level for 10 seconds.

OBD-II DRIVE CYCLE PATTERN

Refer to Diagnostic Function –OBD-II Drive Cycle – Pattern 23 P.13A-12.

TROUBLESHOOTING HINTS (The most likely causes for this code to be set are:)

- Barometric pressure sensor failed.
- Open barometric pressure sensor circuit, or connector damage.
- ECM failed.

DIAGNOSIS

Required Special Tools:

- MB991958: Scan Tool (M.U.T.-III Sub Assembly)
  - MB991824: V.C.I.
  - MB991827: USB Cable
  - MB991911: Main Harness B

STEP 1. Using scan tool MB991958, check data list item 25: Barometric Pressure Sensor.

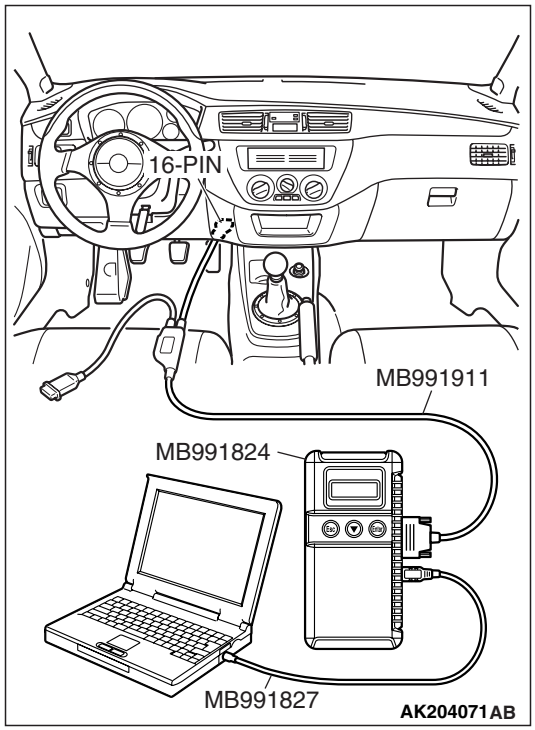

⚠ CAUTION

To prevent damage to scan tool MB991958, always turn the ignition switch to the "LOCK" (OFF) position before connecting or disconnecting scan tool MB991958.

(1) Connect scan tool MB991958 to the data link connector.
(2) Turn the ignition switch to the "ON" position.
(3) Set scan tool MB991958 to the data reading mode for item 25, Barometric Pressure Sensor.
- When altitude is 0 m (0 foot), 101 kPa (29.8 in.Hg).
- When altitude is 600 m (1,969 feet), 95 kPa (28.1 in.Hg).
- When altitude is 1,200 m (3,937 feet), 88 kPa (26.0 in.Hg).
- When altitude is 1,800 m (5,906 feet), 81 kPa (23.9 in.Hg).

(4) Turn the ignition switch to the "LOCK" (OFF) position.

Q: Is the sensor operating properly?

YES : It can be assumed that this malfunction is intermittent. Refer to GROUP 00, How to Use Troubleshooting/Inspection Service Points –How to Cope with Intermittent Malfunctions P.00-13.

NO : Go to Step 2.

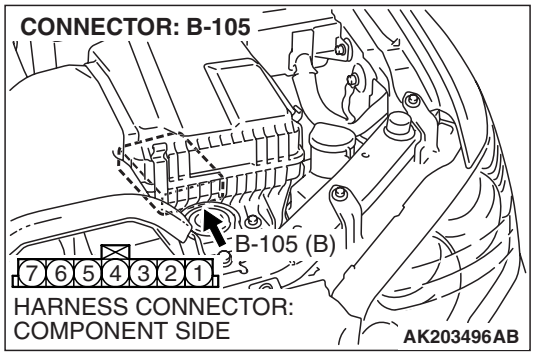

STEP 2. Measure the sensor output voltage at barometric pressure sensor connector B-105 by backprobing.

(1) Do not disconnect connector B-105.

(2) Turn the ignition switch to the "ON" position.

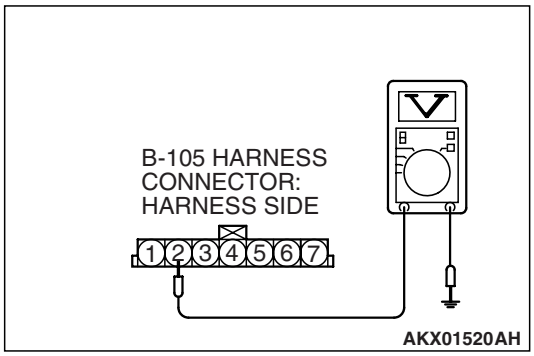

(3) Measure the voltage between terminal No. 2 and ground by backprobing.
- When altitude is 0 m (0 foot), voltage should be between 3.7 and 4.3 volts.
- When altitude is 600 m (1,969 feet), voltage should be between 3.4 and 4.0 volts.
- When altitude is 1,200 m (3,937 feet), voltage should be between 3.2 and 3.8 volts.
- When altitude is 1,800 m (5,906 feet), voltage should be between 2.9 and 3.5 volts.

(4) Turn the ignition switch to the "LOCK" (OFF) position.

Q: Is the measured voltage within the specified range?

YES : Go to Step 3.

NO : Go to Step 5.

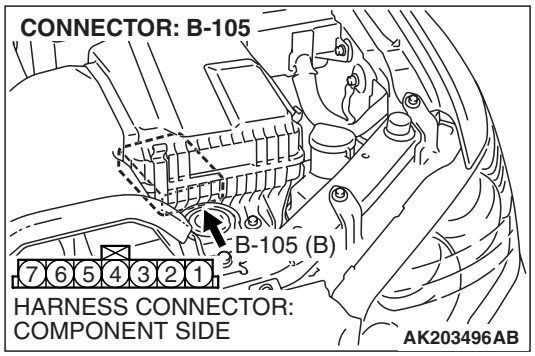

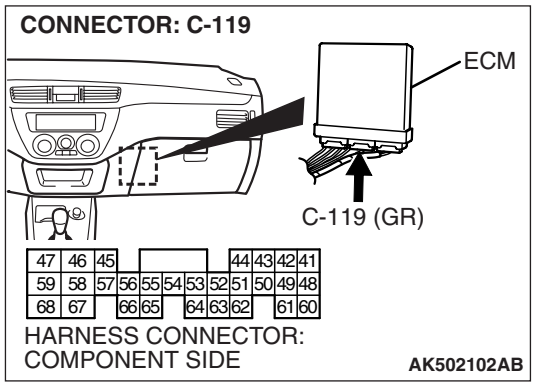

STEP 3. Check harness connector B-105 at the barometric pressure sensor and harness connector C-119 at ECM for damage.

Q: Is the harness connector in good condition?

YES : Go to Step 4.

NO : Repair or replace it. Refer to GROUP 00E, Harness Connector Inspection P.00E-2. Then go to Step 12.

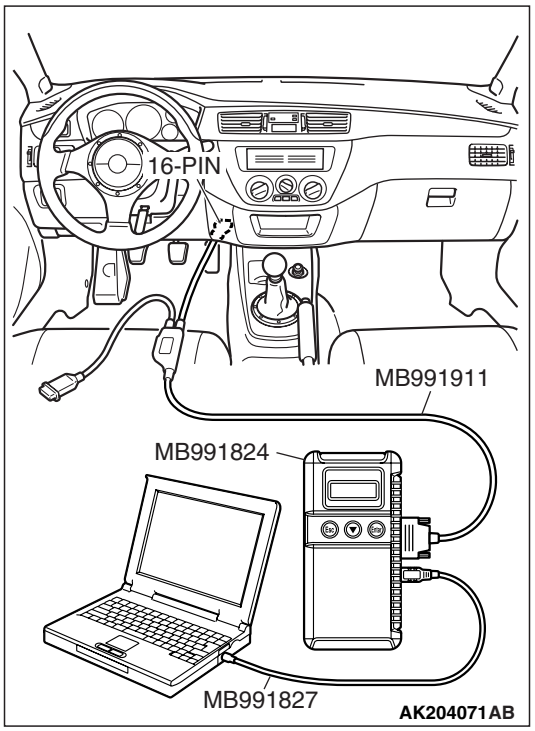

STEP 4. Using scan tool MB991958, check data list item 25: Barometric Pressure Sensor.

⚠ CAUTION

To prevent damage to scan tool MB991958, always turn the ignition switch to the "LOCK" (OFF) position before connecting or disconnecting scan tool MB991958.

(1) Connect scan tool MB991958 to the data link connector.
(2) Turn the ignition switch to the "ON" position.
(3) Set scan tool MB991958 to the data reading mode for item 25, Barometric Pressure Sensor.
- When altitude is 0 m (0 foot), 101 kPa (29.8 in.Hg).
- When altitude is 600 m (1,969 feet), 95 kPa (28.1 in.Hg).
- When altitude is 1,200 m (3,937 feet), 88 kPa (26.0 in.Hg).
- When altitude is 1,800 m (5,906 feet), 81 kPa (23.9 in.Hg).

(4) Turn the ignition switch to the "LOCK" (OFF) position.

Q: Is the sensor operating properly?

YES : It can be assumed that this malfunction is intermittent. Refer to GROUP 00, How to Use Troubleshooting/Inspection Service Points –How to Cope with Intermittent Malfunctions P.00-13.

NO : Replace the ECM. Then go to Step 12.

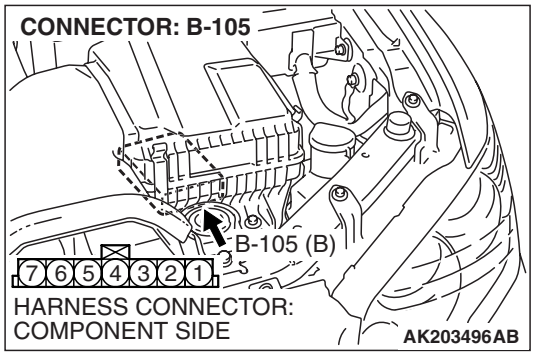

STEP 5. Measure the sensor supply voltage at barometric pressure sensor connector B-105 by backprobing.

(1) Do not disconnect connector B-105.

(2) Turn the ignition switch to the "ON" position.

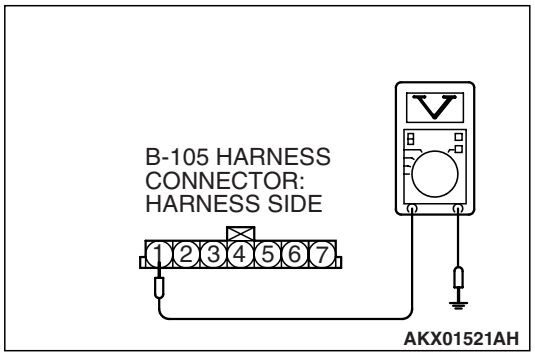

(3) Measure the voltage between terminal No. 1 and ground by backprobing.
- Voltage should be between 4.8 and 5.2 volts.

(4) Turn the ignition switch to the "LOCK" (OFF) position.

Q: Is the measured voltage between 4.8 and 5.2 volts?

YES : Go to Step 7.

NO : Go to Step 6.

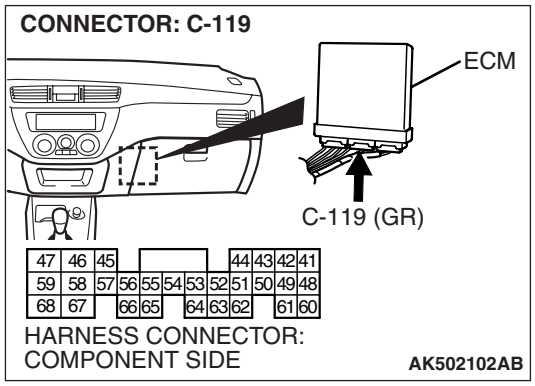

STEP 6. Check harness connector C-119 at ECM for damage.

Q: Is the harness connector in good condition?

YES : Replace the ECM. Then go to Step 12.

NO : Repair or replace it. Refer to GROUP 00E, Harness Connector Inspection P.00E-2. Then go to Step 12.

STEP 7. Measure the ground voltage at barometric pressure sensor connector B-105 by backprobing.

(1) Do not disconnect connector B-105.
(2) Turn the ignition switch to the "ON" position.

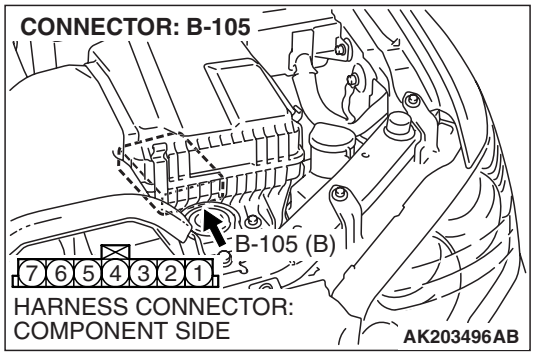

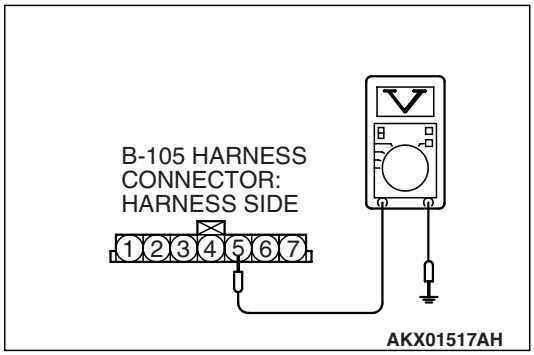

(3) Measure the voltage between terminal No. 5 and ground by backprobing.
- Voltage should be 0.5 volt or less.

(4) Turn the ignition switch to the "LOCK" (OFF) position.

Q: Is the measured voltage 0.5 volt or less?

YES : Go to Step 10.
NO : Go to Step 8.

STEP 8. Check harness connector B-105 at the barometric pressure sensor and harness connector C-121 at ECM for damage.

Q: Is the harness connector in good condition?

YES : Go to Step 9.
NO : Repair or replace it. Refer to GROUP 00E, Harness Connector Inspection P.00E-2. Then go to Step 12.

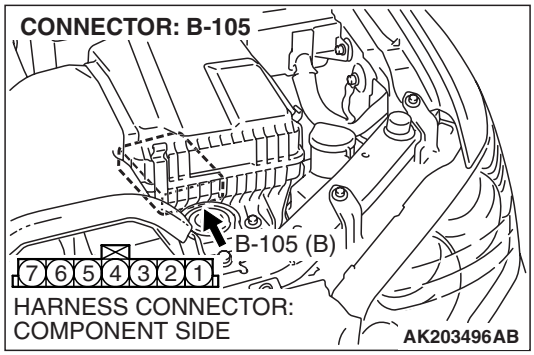

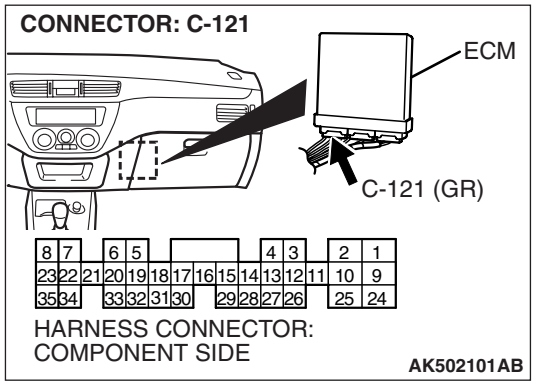

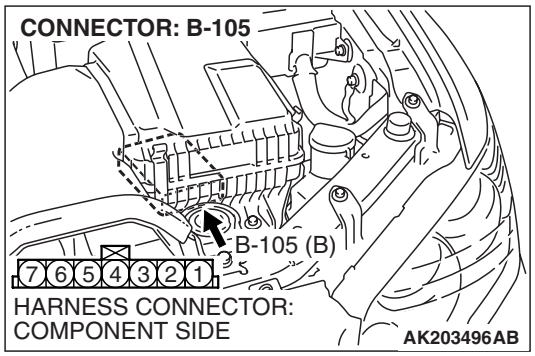

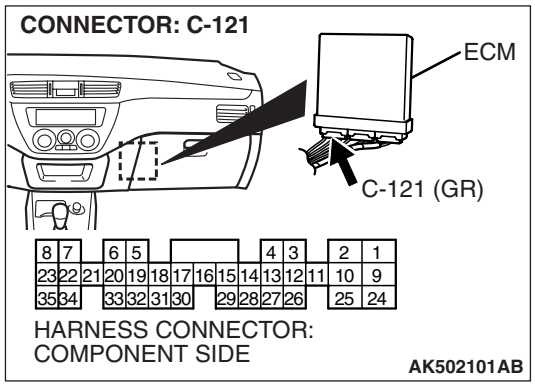

STEP 9. Check for open circuit between barometric pressure sensor connector B-105 (terminal No. 5) and ECM connector C-121 (terminal No. 34).

Q: Is the harness wire in good condition?

YES : Replace the ECM. Then go to Step 12.

NO : Repair it. Then go to Step 12.

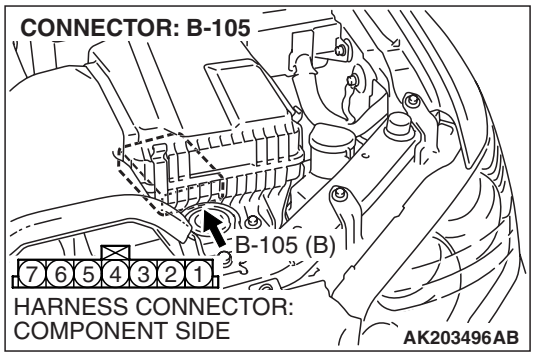

STEP 10. Check harness connector B-105 at barometric pressure sensor for damage.

Q: Is the harness connector in good condition?

YES : Go to Step 11.

NO : Repair or replace it. Refer to GROUP 00E, Harness Connector Inspection P.00E-2. Then go to Step 12.

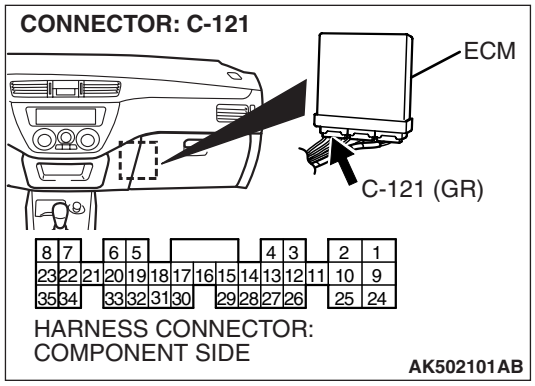

STEP 11. Check harness connector C-121 at ECM for damage.

Q: Is the harness connector in good condition?

YES : Replace the volume airflow sensor. Then go to Step 12.

NO : Repair or replace it. Refer to GROUP 00E, Harness Connector Inspection P.00E-2. Then go to Step 12.

STEP 12. Test the OBD-II drive cycle.

(1) Carry out a test drive with the drive cycle pattern. Refer to GROUP 13A, Diagnostic Function –OBD-II Drive Cycle – Pattern 23 P.13A-12.

(2) Check the diagnostic trouble code (DTC).

Q: Is DTC P2229 set?

YES : Retry the troubleshooting.

NO : The inspection is complete.

DTC P2263: Intake Charge System Malfunction

TECHNICAL DESCRIPTION

- The ECM indicates or monitors a minimum prescribed value of volumetric efficiency within the boost operation range, which is determined by the signals from the throttle position sensor and the engine speed.

DTC SET CONDITIONS

Check Conditions

- Intake air temperature sensor, barometric pressure sensor, volume airflow sensor, and throttle position sensor are normal.
- Engine speed is between 3,000 and 5,000 r/min.
- Throttle position sensor output voltage is higher than 2 volts.

Judgement Criterion

- Volumetric efficiency is lower than 80 percent.

TROUBLESHOOTING HINTS (The most likely causes for this code to be set are:)

- Turbocharger wastegate actuator failed.
- Turbocharger wastegate regulating valve failed.
- Charging pressure control system failed.
- Intake charge pressure leak.
- ECM failed.

DIAGNOSIS

Required Special Tools:

- MB991958: Scan Tool (M.U.T.-III Sub Assembly)
  - MB991824: V.C.I.
  - MB991827: USB Cable
  - MB991911: Main Harness B

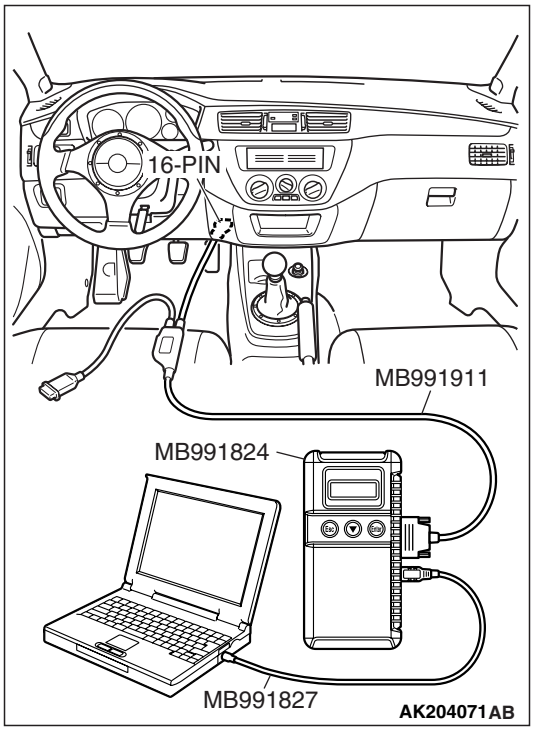

STEP 1. Using scan tool MB991958, check actuator test item 12: Turbocharger Wastegate Solenoid.

⚠ CAUTION

To prevent damage to scan tool MB991958, always turn the ignition switch to the "LOCK" (OFF) position before connecting or disconnecting scan tool MB991958.

(1) Connect scan tool MB991958 to the data link connector.
(2) Turn the ignition switch to the "ON" position.
(3) Set scan tool MB991958 to the actuator test mode for item 12, turbocharger wastegate solenoid.
- An operation sound should be heard and vibration should be felt when the turbocharger wastegate solenoid is operated.

(4) Turn the ignition switch to the "LOCK" (OFF) position.

Q: Is the solenoid operating properly?

YES : Go to Step 2.
NO : Refer to DTC P0243 –Turbocharger Wastegate Solenoid Circuit P.13A-335.

STEP 2. Check the intake charge pressure.

Refer to GROUP 15, On-vehicle Service –Intake Charge Pressure Check. P.15-4

Q: Are there any abnormalities?

YES : Repair or replace it. Then go to Step 5.
NO : Go to Step 3.

STEP 3. Check the intake charge pressure control system.

Refer to GROUP 15, On-vehicle Service –Intake Charge Pressure Control System Check. P.15-5

Q: Are there any abnormalities?

YES : Repair or replace it. Then go to Step 5.
NO : Go to Step 4.

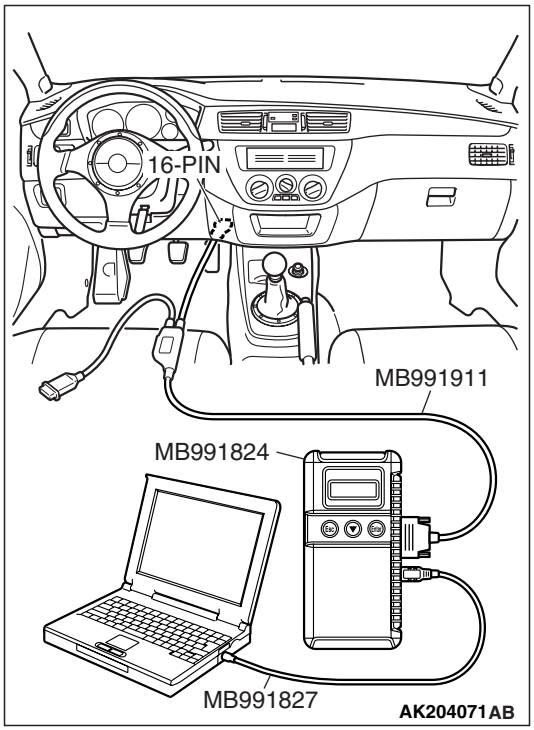

STEP 4. Using scan tool MB991958, read the diagnostic trouble code (DTC).

⚠ CAUTION

To prevent damage to scan tool MB991958, always turn the ignition switch to the "LOCK" (OFF) position before connecting or disconnecting scan tool MB991958.

(1) Connect scan tool MB991958 to the data link connector.
(2) Turn the ignition switch to the "ON" position.
(3) Set scan tool MB991958 to the data reading mode for item 14, Throttle Position Sensor.

⚠ CAUTION

During a test drive, the data list must be read by someone other than the driver.

(4) Accelerate the vehicle within the engine speed range of 3,000 to 5,000 r/min while a minimum of 2 volts is being output by the throttle position sensor.
(5) After completing the test drive, read the DTC. Turn the ignition switch to the "LOCK" (OFF) position.

Q: Is the DTC P2263 set?

YES : Replace the ECM. Then Go to Step 5.
NO : It can be assumed that this malfunction is intermittent.Refer to GROUP 00, How to Use Troubleshooting/ Inspection Service Points –How to Cope with Intermittent Malfunctions P.00-13.

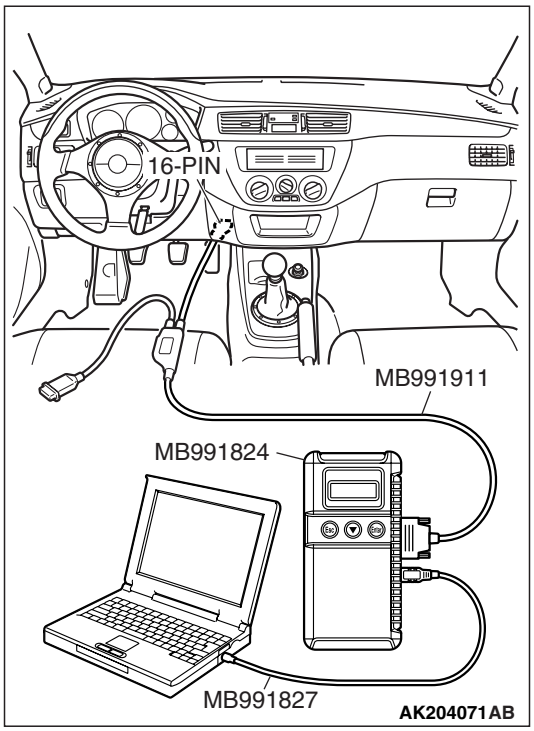

STEP 5. Using scan tool MB991958, read the diagnostic trouble code (DTC).

⚠ CAUTION

To prevent damage to scan tool MB991958, always turn the ignition switch to the "LOCK"(OFF) position before connecting or disconnecting scan tool MB991958.

(1) Connect scan tool MB991958 to the data link connector.
(2) Turn the ignition switch to the "ON" position.
(3) Set scan tool MB991958 to the data reading mode for item 14, Throttle Position Sensor.

⚠ CAUTION

During a test drive, the data list must be read by someone other than the driver.

(4) Accelerate the vehicle within the engine speed range of 3,000 to 5,000 r/min while a minimum of 2 volts is being output by the throttle position sensor.
(5) After completing the test drive, read the DTC. Turn the ignition switch to the "LOCK" (OFF) position.

Q: Is the DTC P2263 set?

YES : Retry the troubleshooting.
NO : The inspection is complete.

SYMPTOM PROCEDURES

INSPECTION PROCEDURE 1: Communication with Scan Tool is Not Possible (Communication with All System is Not Possible)

Data Link Connector Circuit

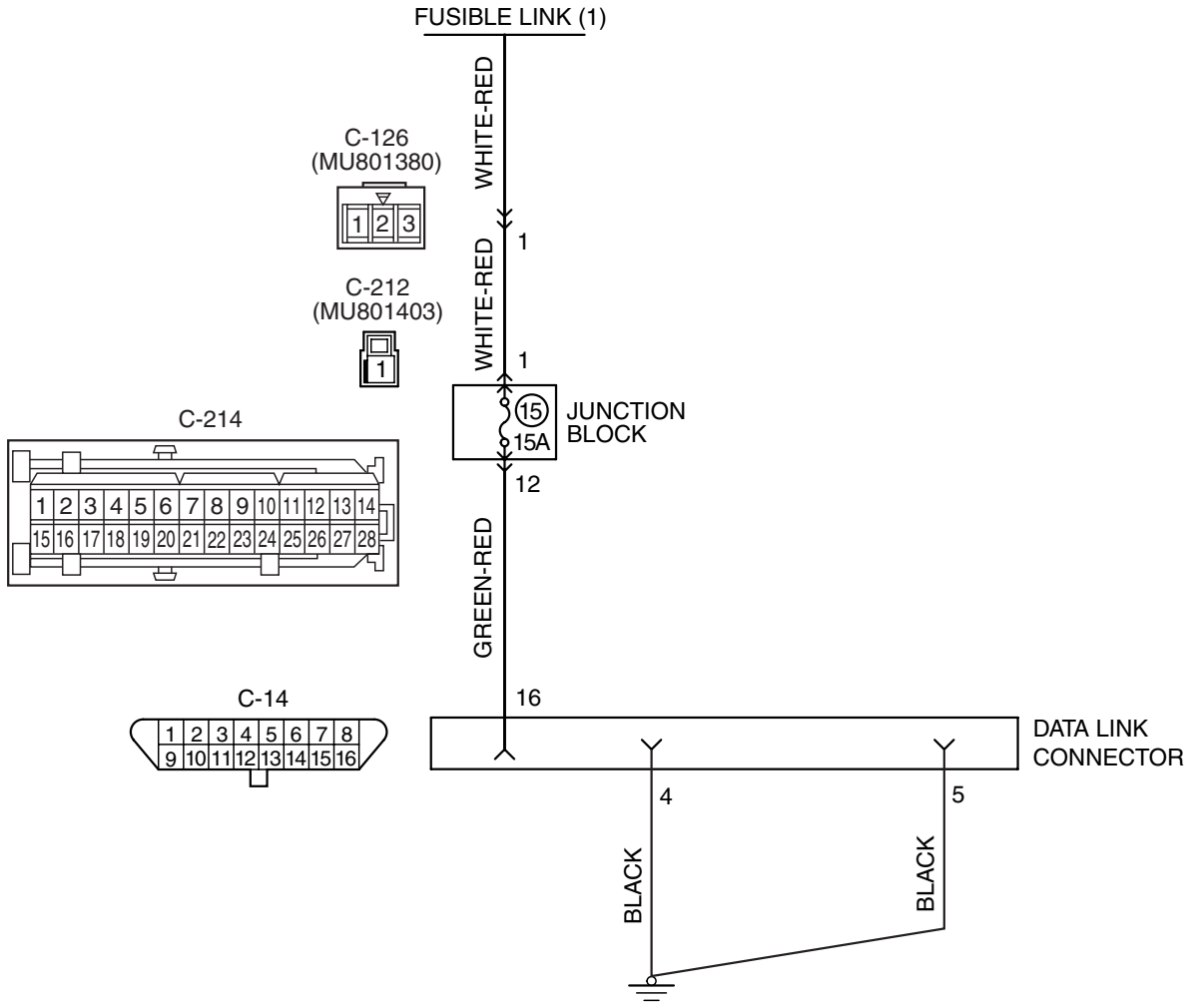

AK203574

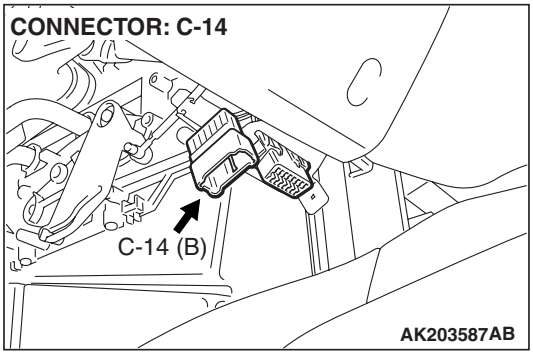

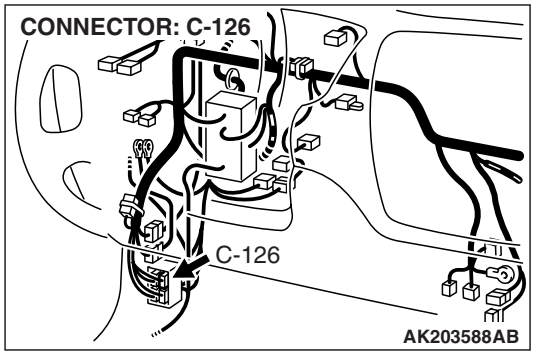

TSB Revision

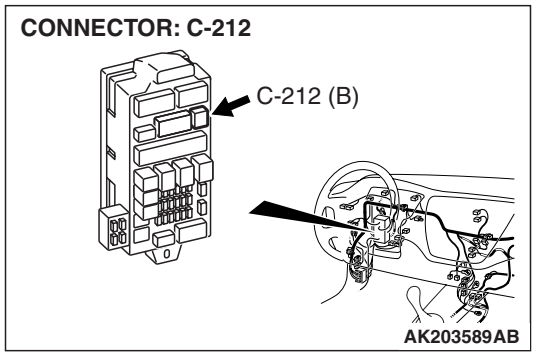

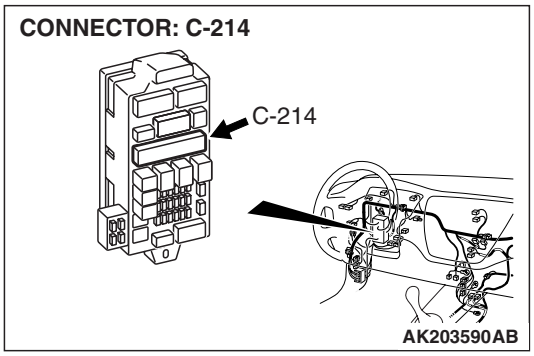

CIRCUIT OPERATION

- A battery positive voltage is applied on the data link connector power terminal (terminal No. 16). The ground terminals (terminals No. 4, No. 5) are grounded to the vehicle body.

COMMENT

- The cause is probably a defect in power supply system (including ground) for the on-board diagnostic test mode line.

TROUBLESHOOTING HINTS (The most likely causes for this case:)

- Malfunction of the data link connector.
- Damaged harness wire.

DIAGNOSIS

STEP 1. Measure the power supply voltage at data link connector C-14.

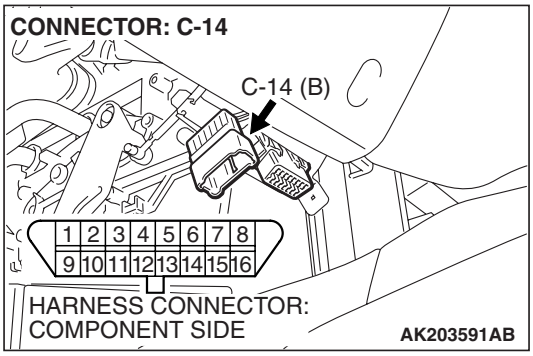

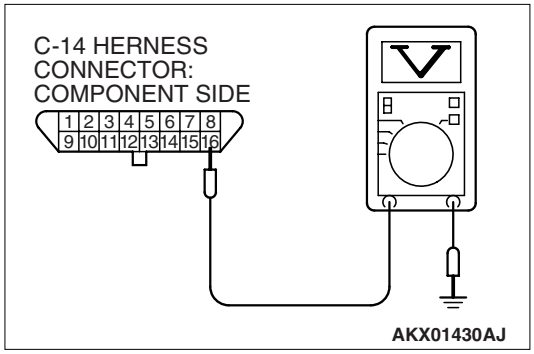

(1) Measure voltage between terminal No. 16 and ground.
- Voltage should measure battery positive voltage.

Q: Is battery positive voltage (approximately 12 volts) present?

YES : Go to step 2.

NO : Check harness connectors C-126, C-212 and C-214 at intermediate connector for damage, and repair or replace as required. Refer to GROUP 00E, Harness Connector Inspection P.00E-2. If intermediate connectors are in good condition, repair harness wire between fusible link (1) and data link connector C-14 (terminal No. 16) because of open circuit. Then confirm that the malfunction symptom is eliminated.

STEP 2. Check for continuity at data link connector C-14.

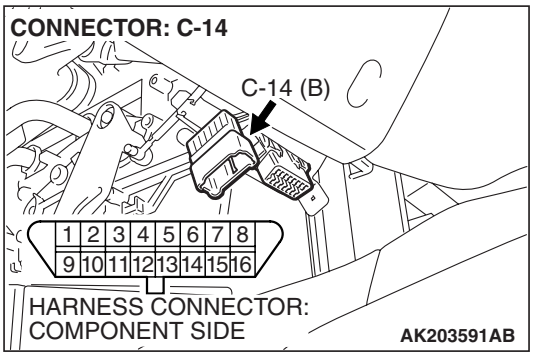

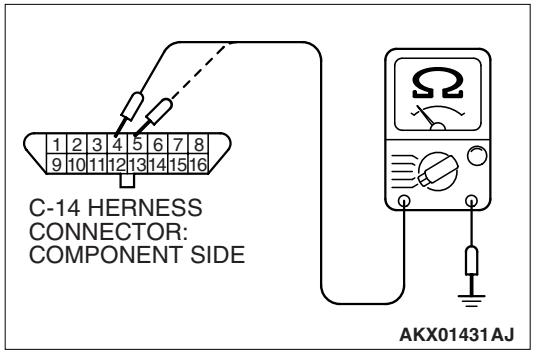

(1) Check for the continuity between terminals No. 4, No. 5 and ground.
- Should be less than 2 ohms.

Q: Does continuity exist?

YES : Replace the scan tool. Then confirm that the malfunction symptom is eliminated.

NO : Repair harness wire between data link connector C-14 (terminals No. 4, No. 5) and ground because of open circuit or harness damage. Then confirm that the malfunction symptom is eliminated.

INSPECTION PROCEDURE 2: Communication with Scan Tool is Not Possible (Communication with ECM Only is Not Possible)

Data Link Connector Circuit

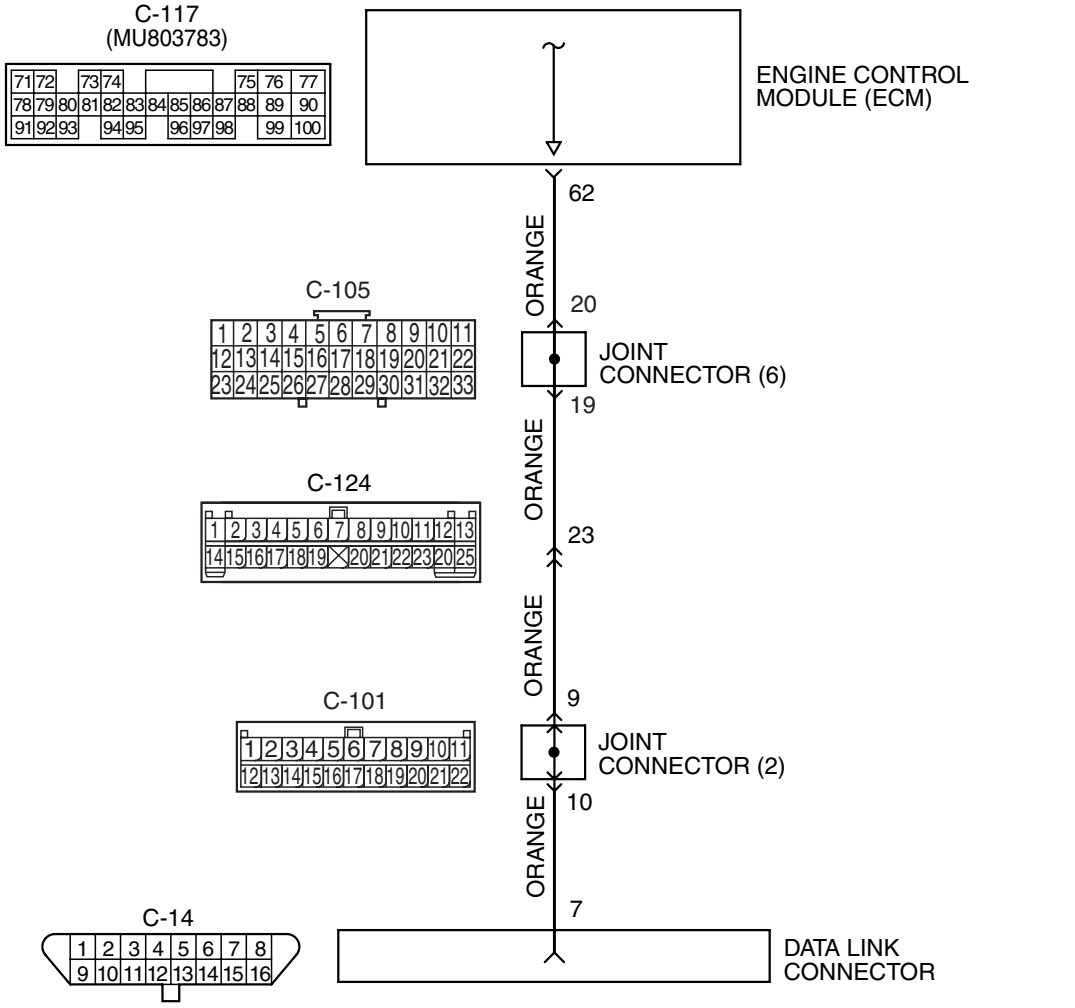

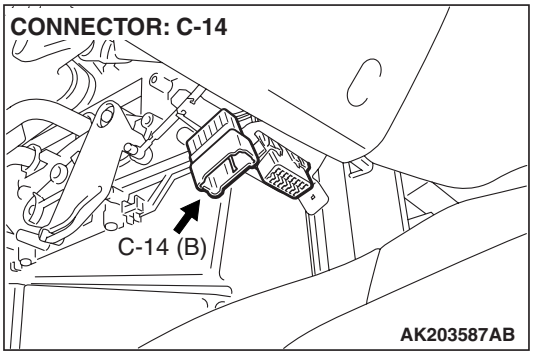

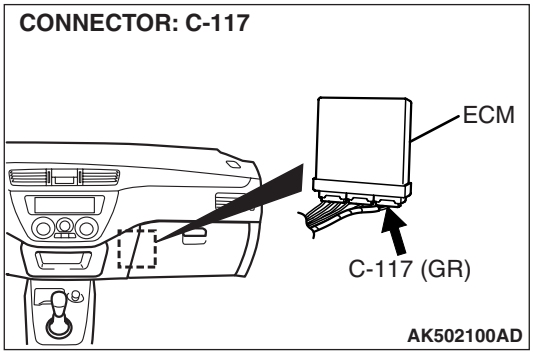

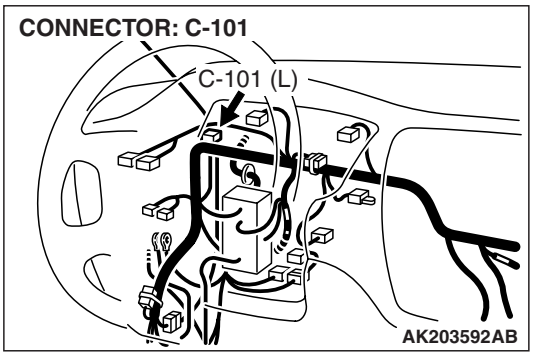

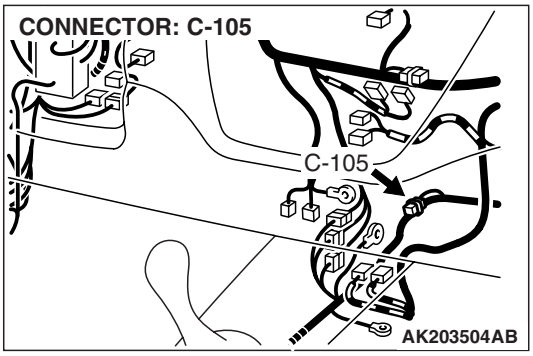

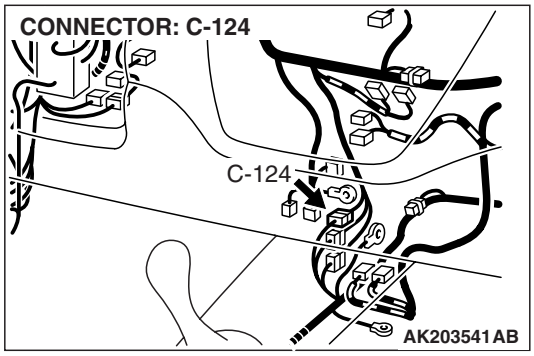

CIRCUIT OPERATION

- A diagnostic output is made from the ECM (terminal No. 62) to the diagnostic output terminal (terminal No. 7) of the data link connector.

COMMENT

- No power supply to ECM.
- Defective ground circuit of ECM.
- Defective ECM.
- Improper communication line between ECM and scan tool.

TROUBLESHOOTING HINTS (The most likely causes for this case:)

- Malfunction of ECM power supply circuit.
- Malfunction of the ECM.
- Open circuit between ECM and data link connector.

DIAGNOSIS

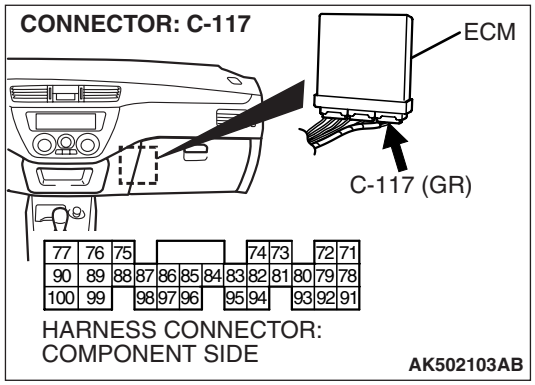

STEP 1. Check connector C-117 at ECM for damage.

Q: Is the connector in good condition?

YES : Go to Step 2.

NO : Repair or replace it. Refer to GROUP 00E, Harness Connector Inspection P.00E-2. Then confirm that the malfunction symptom is eliminated.

STEP 2. Check for open circuit, short circuit to ground and harness damage between data link connector C-14 (terminal No. 7) and ECM connector C-117 (terminal No. 62).

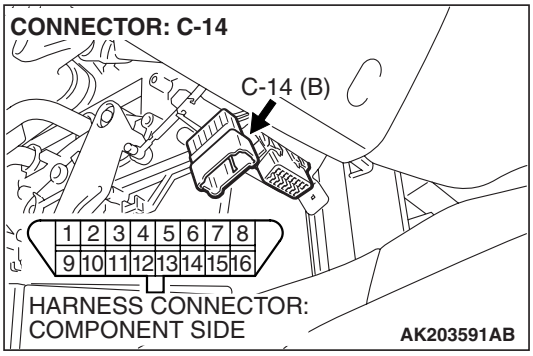

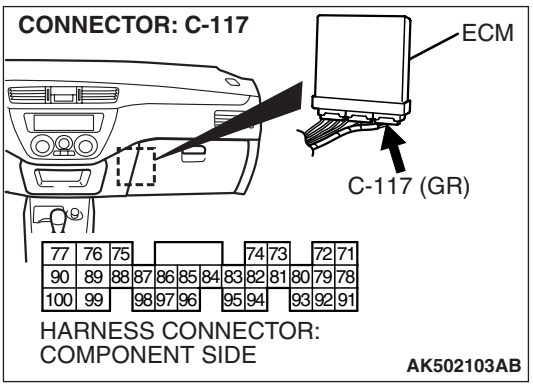

NOTE: Check harness after checking intermediate connectors C-101, C-105 and C-124. If intermediate connectors are damaged, repair or replace them. Refer to GROUP 00E, Harness Connector Inspection P.00E-2. Then check that the malfunction is eliminated.

Q: Is the harness wire in good condition?

YES : Refer to, INSPECTION PROCEDURE 30 –Power Supply System and Ignition Switch –IG System P.13A-780.

NO : Repair it. Then confirm that the malfunction symptom is eliminated.

INSPECTION PROCEDURE 3: The Malfunction Indicator Lamp (SERVICE ENGINE SOON) Does Not Illuminate Right After The Ignition Switch is Turned to The "ON" Position

Malfunction Indicator Lamp (SERVICE ENGINE SOON) Circuit

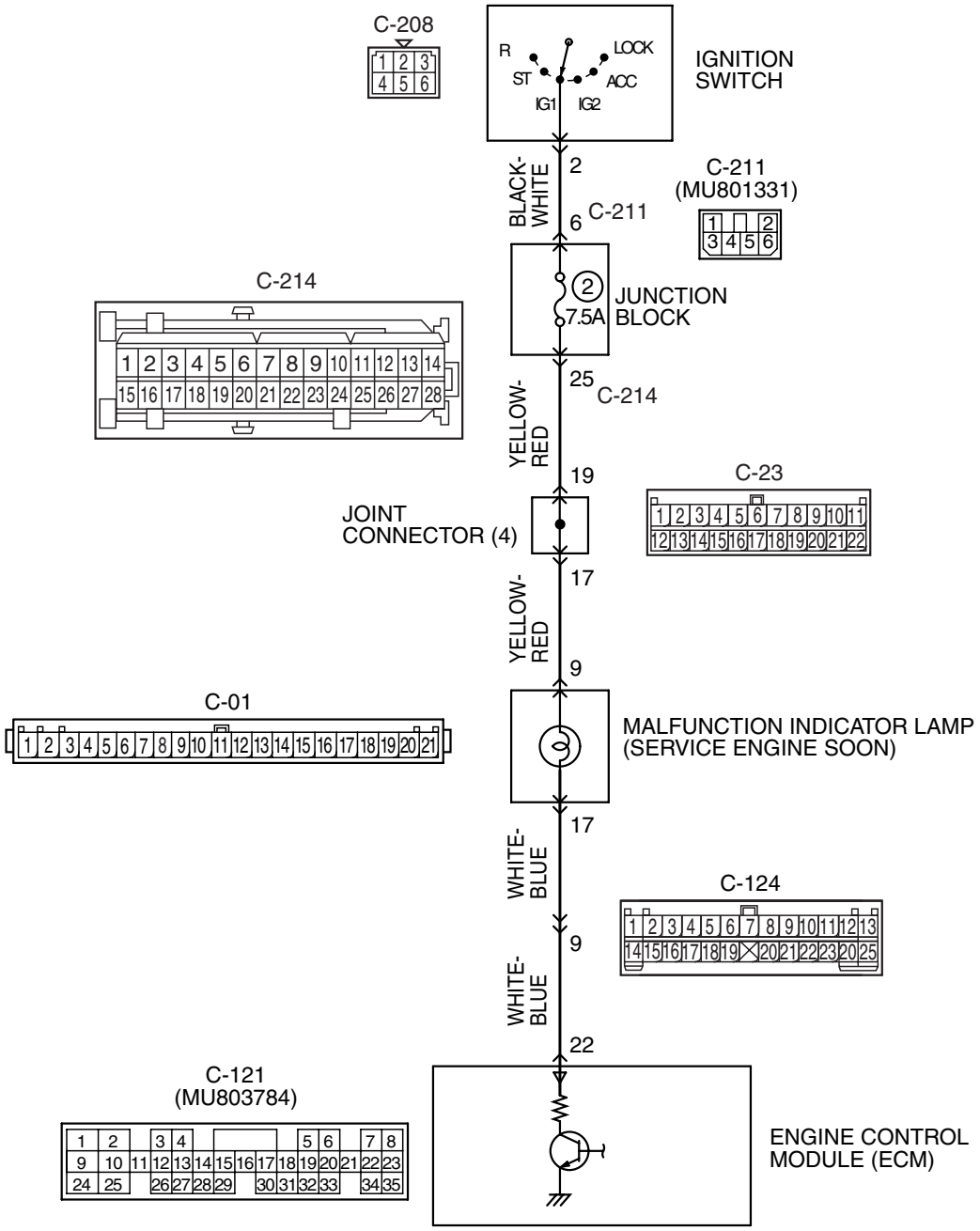

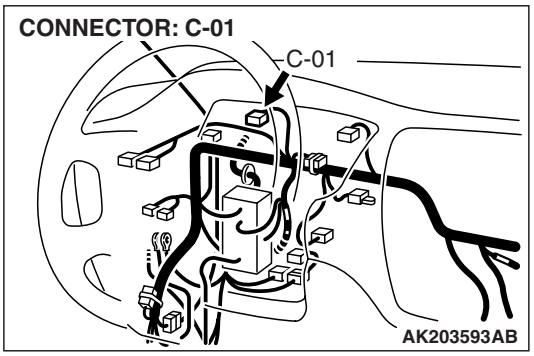

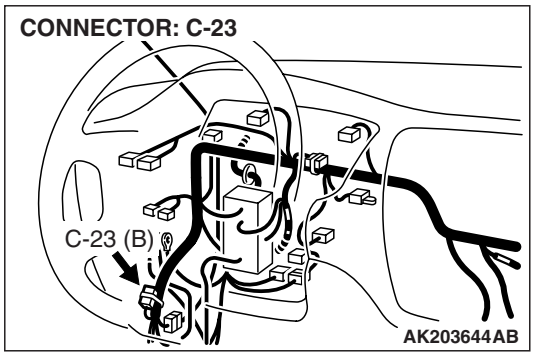

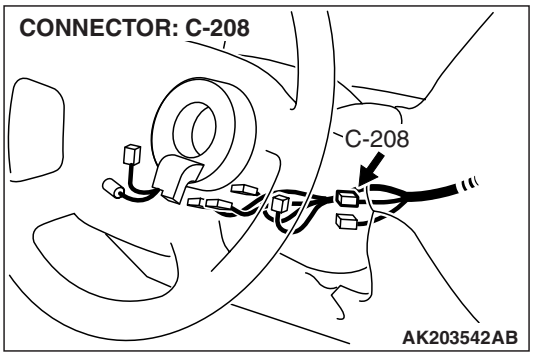

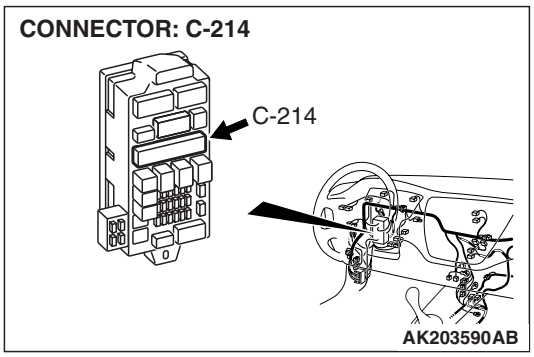

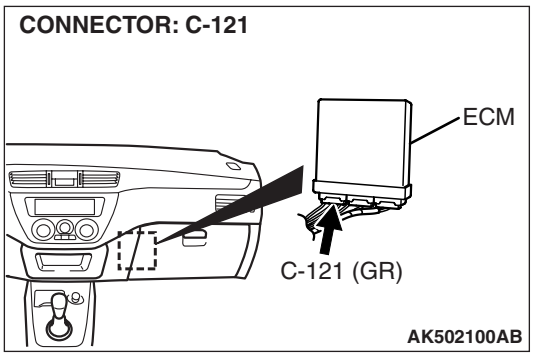

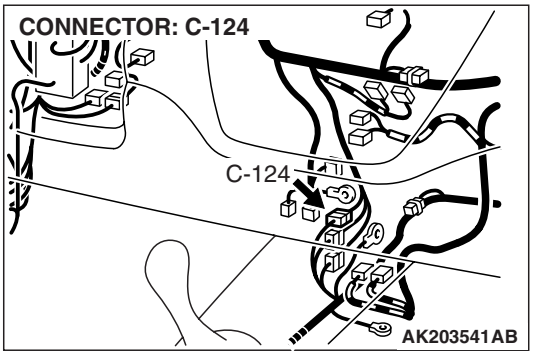

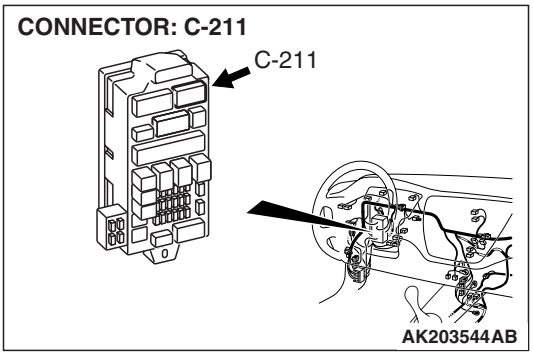

CIRCUIT OPERATION

- The malfunction indicator lamp (SERVICE ENGINE SOON) power is supplied from the ignition switch.
- The ECM controls the ground of the malfunction indicator lamp (SERVICE ENGINE SOON) by turning the power transistor in the ECM ON and OFF.

COMMENT

- The ECM causes the malfunction indicator lamp (SERVICE ENGINE SOON) to illuminate for 5 seconds immediately after the ignition switch is turned to the "ON" position occurred.

TROUBLESHOOTING HINTS (The most likely causes for this case:)

- Burnt-out bulb.
- Defective malfunction indicator lamp (SERVICE ENGINE SOON) circuit.
- Malfunction of the ECM.

DIAGNOSIS

Required Special Tools:

- MB991958: Scan Tool (M.U.T.-III Sub Assembly)
  - MB991824: V.C.I.
  - MB991827: USB Cable
  - MB991911: Main Harness B

STEP 1. Using scan tool MB991958, check data list item 16: Power Supply Voltage.

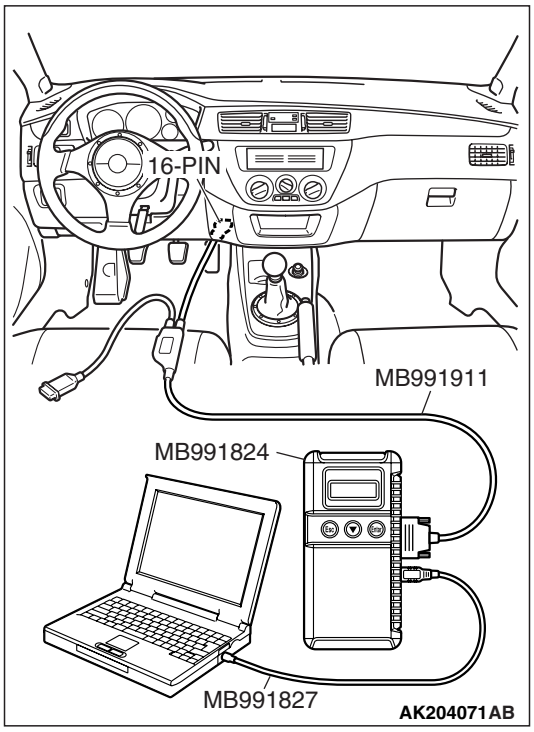

⚠ CAUTION

To prevent damage to scan tool MB991958, always turn the ignition switch to the "LOCK" (OFF) position before. connecting or disconnecting scan tool MB991958.

(1) Connect scan tool MB991958 to the data link connector.
(2) Turn the ignition switch to the "ON" position.
(3) Set scan tool MB991958 to the data reading mode for item 16, Power Supply Voltage.
  - Voltage should measure battery positive voltage.
(4) Turn the ignition switch to the "LOCK" (OFF) position.

Q: Is battery positive voltage (approximately 12 volts) present?

YES : Go to Step 2.

NO : Refer to INSPECTION PROCEDURE 30 –Power Supply System and Ignition Switch –IG System P.13A-780.

STEP 2. Check the burned-out bulb.

Q: Is the bulb normal?

YES : Go to step 3.

NO : Replace the bulb. Then confirm that the malfunction symptom is eliminated.

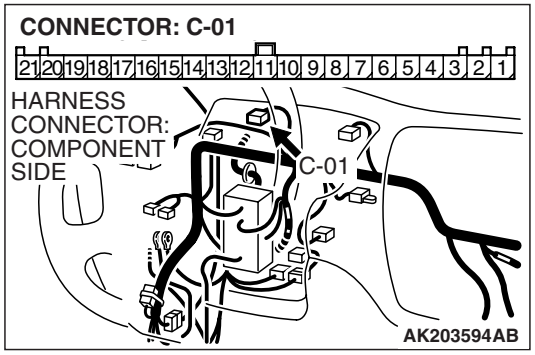

STEP 3. Check connector C-01 at the combination meter for damage.

Q: Is the connector in good condition?

YES : Go to step 4.

NO : Repair or replace it. Refer to GROUP 00E, Harness Connector Inspection P.00E-2. Then confirm that the malfunction symptom is eliminated.

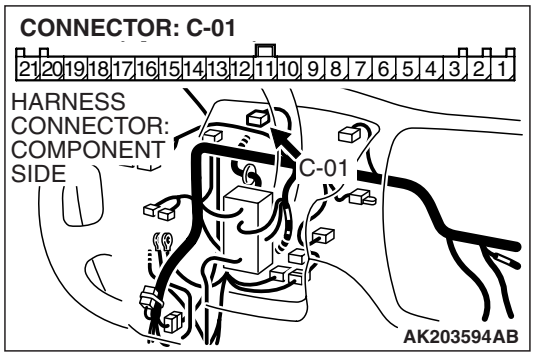

STEP 4. Measure the power supply voltage at combination meter harness side connector C-01.

(1) Disconnect the connector C-01 and measure at the harness side.

(2) Turn the ignition switch to the "ON" position.

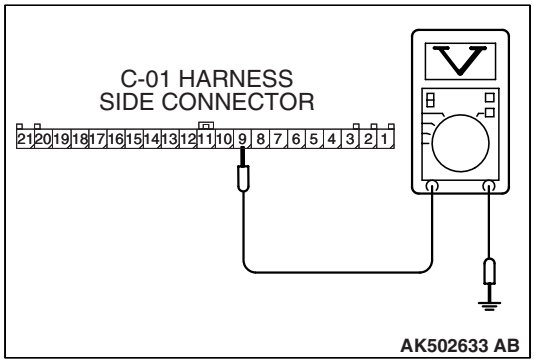

(3) Measure the voltage between terminal No. 9 and ground.
- Voltage should measure battery positive voltage.

(4) Turn the ignition switch to the "LOCK" (OFF) position.

Q: Is battery positive voltage (approximately 12 volts) present?

YES : Go to Step 5.

NO : Check harness connectors C-23, C-211 and C-214 at intermediate connector for damage, and repair or replace as required. Refer to GROUP 00E, Harness Connector Inspection P.00E-2. If intermediate connectors are in good condition, repair harness wire between ignition switch connector C-208 (terminal No. 2) and combination meter connector C-01 (terminal No. 9) because of open circuit. Then confirm that the malfunction symptom is eliminated.

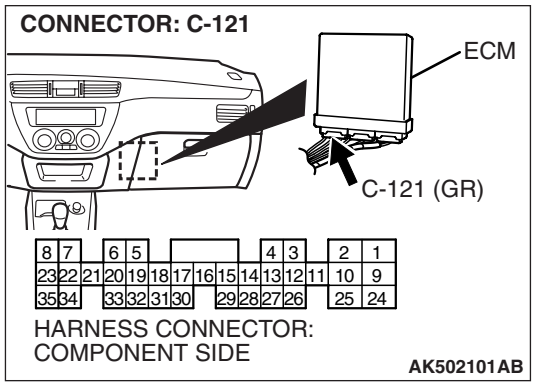

STEP 5. Check connector C-121 at ECM for damage.

Q: Is the connector in good condition?

YES : Go to Step 6.

NO : Repair or replace it. Refer to GROUP 00E, Harness Connector Inspection P.00E-2. Then confirm that the malfunction symptom is eliminated.

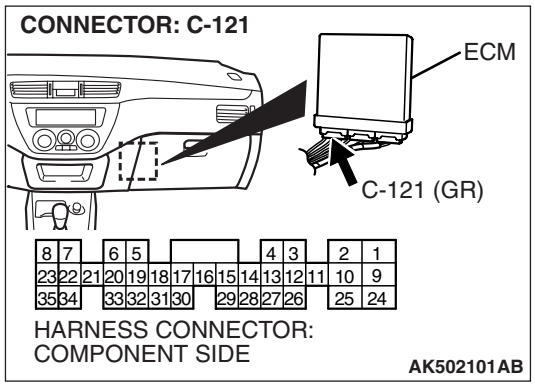

STEP 6. Measure the power supply voltage ECM connector C-121.

(1) Disconnect the connector C-121 and measure at the harness side.

(2) Turn the ignition switch to the "ON" position.

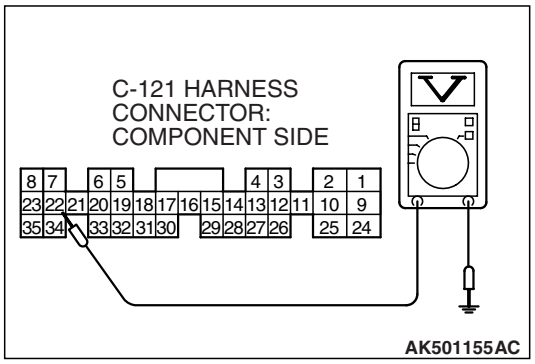

(3) Measure the voltage between terminal No. 22 and ground.
- Voltage should measure battery positive voltage.

(4) Turn the ignition switch to the "LOCK" (OFF) position.

Q: Is battery positive voltage (approximately 12 volts) present?

YES : Replace the ECM. Then confirm that the malfunction symptom is eliminated.

NO : Check harness connectors C-124 at intermediate connector for damage, and repair or replace as required. Refer to GROUP 00E, Harness Connector Inspection P.00E-2. If intermediate connectors is in good condition, repair harness wire between combination meter connector C-01 (terminal No. 17) and ECM connector C-121 (terminal No. 22) because of open circuit. Then confirm that the malfunction symptom is eliminated.

INSPECTION PROCEDURE 4: The Malfunction Indicator Lamp (SERVICE ENGINE SOON) Remains Illuminated and Never Goes Out

Malfunction Indicator Lamp (SERVICE ENGINE SOON) Circuit

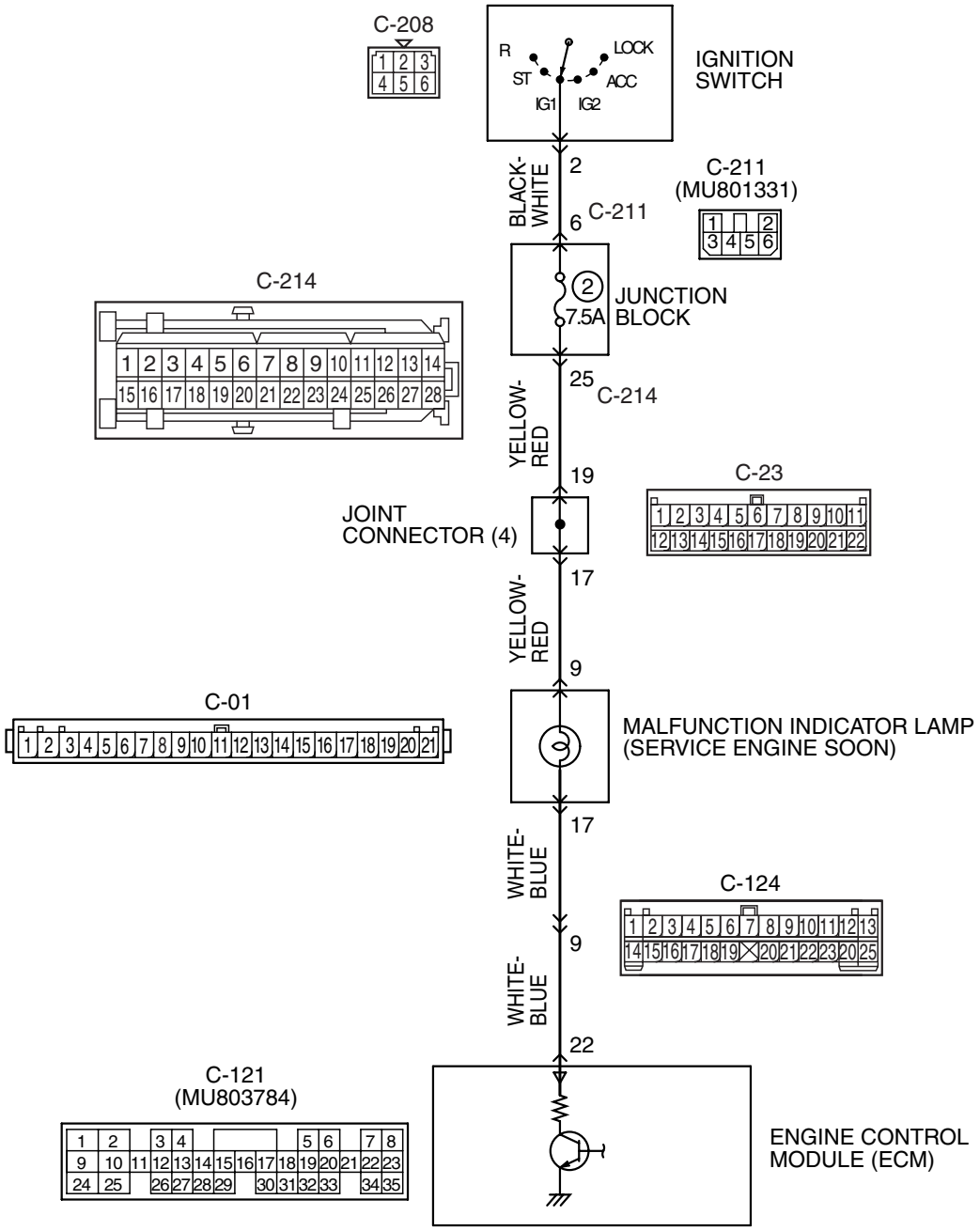

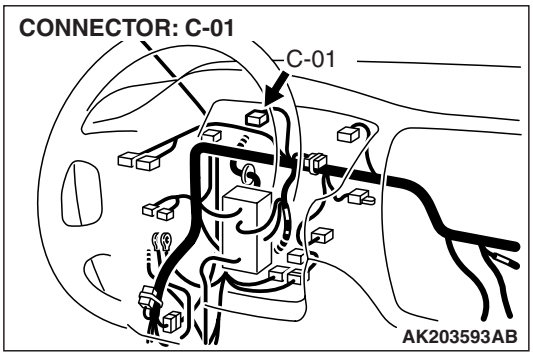

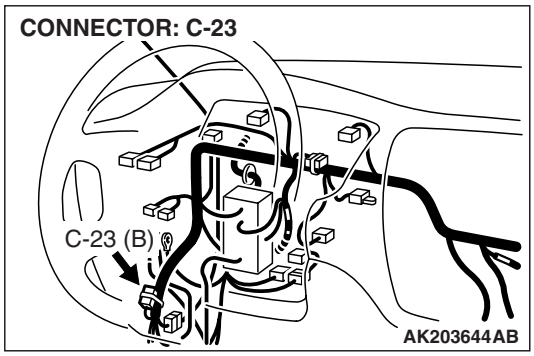

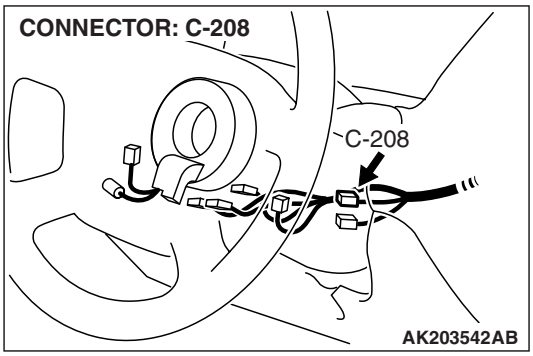

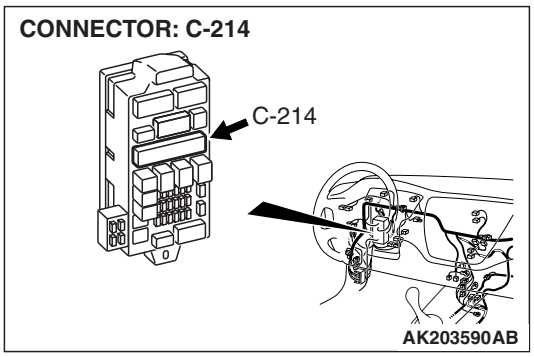

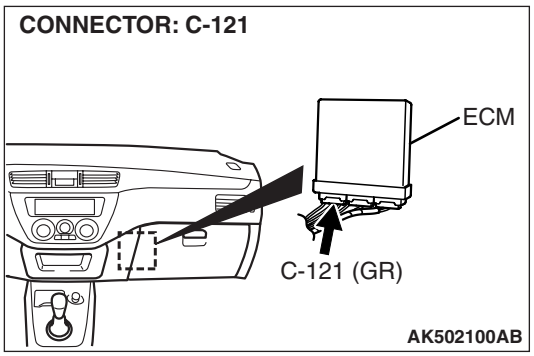

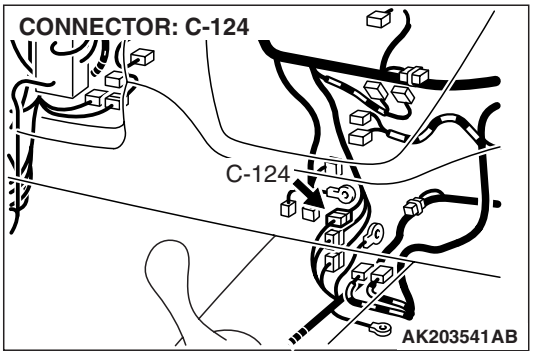

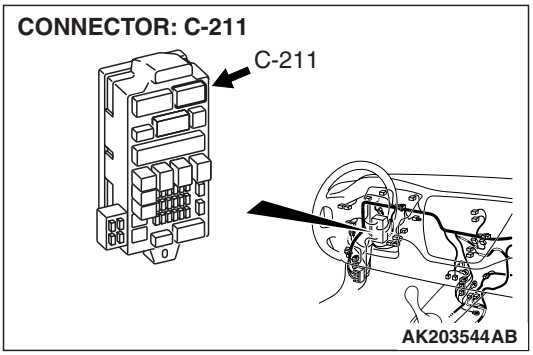

CIRCUIT OPERATION

- The malfunction indicator lamp (SERVICE ENGINE SOON) power is supplied from the ignition switch.
- The ECM controls the ground of the malfunction indicator lamp (SERVICE ENGINE SOON) by turning the power transistor in the ECM ON and OFF.

COMMENT

- In cases such as the above, the cause is probably that the ECM is detecting a problem in a sensor or actuator, or that one of the malfunctions listed at right has probably occurred.

TROUBLESHOOTING HINTS (The most likely causes for this case:)

- Short-circuit between the malfunction indicator lamp (SERVICE ENGINE SOON) and ECM.
- Malfunction of the ECM.

DIAGNOSIS

Required Special Tools:

- MB991958: Scan Tool (M.U.T.-III Sub Assembly)
  - MB991824: V.C.I.
  - MB991827: USB Cable
  - MB991911: Main Harness B

STEP 1. Using scan tool MB991958, read the diagnostic trouble code (DTC).

⚠ CAUTION

To prevent damage to scan tool MB991958, always turn the ignition switch to the "LOCK" (OFF) position before connecting or disconnecting scan tool MB991958.

(1) Connect scan tool MB991958 to the data link connector.
(2) Turn the ignition switch to the "ON" position.
(3) Read the DTC.
(4) Turn the ignition switch to the "LOCK" (OFF) position.

Q: Is DTC set?

YES : Refer to GROUP 13A, Diagnostic Trouble Code Chart P.13A-361.

NO : Go to Step 2.

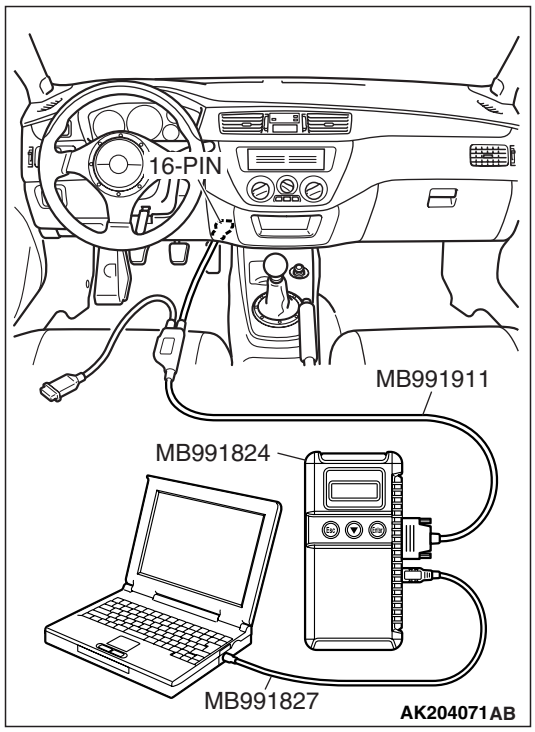

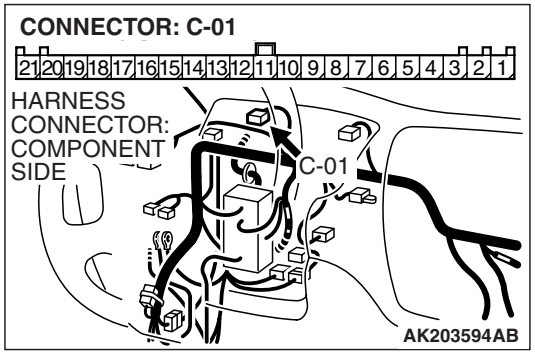

STEP 2. Check for continuity at combination meter harness side connector C-01.

(1) Disconnect the connector C-01 and measure at the harness side.

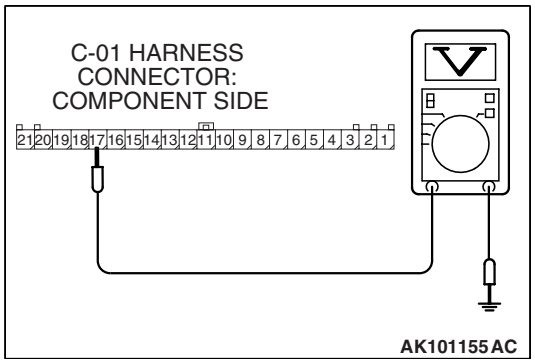

(2) Check for the continuity between terminal No. 17 and ground.
- Should be open loop.

Q: Does continuity exist?

YES : Replace the ECM. Then confirm that the malfunction symptom is eliminated.

NO : Check harness connectors C-124 at the intermediate connector for damage, and repair or replace as required. Refer to GROUP 00E, Harness Connector Inspection P.00E-2. If intermediate connector is in good condition, repair harness wire between combination meter connector C-01 (terminal No. 17) and ECM connector C-121 (terminal No. 22) because of short circuit to ground. Then confirm that the malfunction symptom is eliminated.

INSPECTION PROCEDURE 5: Cranks, Won't Start

Cranks, Won't Start Circuit

- Refer to, Ignition circuit system P.13A-813.

CIRCUIT OPERATION

- Refer to, Ignition circuit system P.13A-813.

COMMENT

- In cases such as the above, the cause is probably no spark, fuel delivery, or fuel quality problems. In addition, foreign materials (water, kerosene, etc.) may be mixed with the fuel.

TROUBLESHOOTING HINTS (The most likely causes for this case:)

- Malfunction of the ignition system.
- Malfunction of the fuel pump system.
- Malfunction of the injector system.
- Malfunction of the ECM.
- Contaminated fuel.

DIAGNOSIS

Required Special Tools:

- MB991958: Scan Tool (M.U.T.-III Sub Assembly)
  - MB991824: V.C.I.
  - MB991827: USB Cable
  - MB991911: Main Harness B

STEP 1. Measure the battery positive voltage.

(1) Measure the battery positive voltage during cranking.
- The voltage should remain greater than 8 volts while the engine is cranked.

Q: Does the voltage remain greater than 8 volts while the engine is cranked?

YES : Go to Step 2.
NO : Check the battery. Refer to GROUP 54A, Battery – Battery check P.54A-4. Then confirm that the malfunction symptom is eliminated.

STEP 2. Check the timing belt for breaks.

Q: Is the timing belt good condition?

YES : Go to Step 3.
NO : Replace timing belt. Then confirm that the malfunction symptom is eliminated.

STEP 3 Using scan tool MB991958, check data list.

⚠ CAUTION
To prevent damage to scan tool MB991958, always turn the ignition switch to the "LOCK" (OFF) position before connecting or disconnecting scan tool MB991958.

(1) Connect scan tool MB991958 to the data link connector.
(2) Turn the ignition switch to the "ON" position.
(3) Check the following items in the data List. Refer to GROUP 13A, Data List Reference Table P.13A-823.
  a. Item 16: Power Supply Voltage.
  b. Item 22: Crankshaft Position Sensor.
  c. Item 21: Engine Coolant Temperature Sensor.
(4) Turn the ignition switch to the "LOCK" (OFF) position.

Q: Are they operating properly?

YES : Go to Step 4.
NO : Repair or replace it. Then confirm that the malfunction symptom is eliminated.

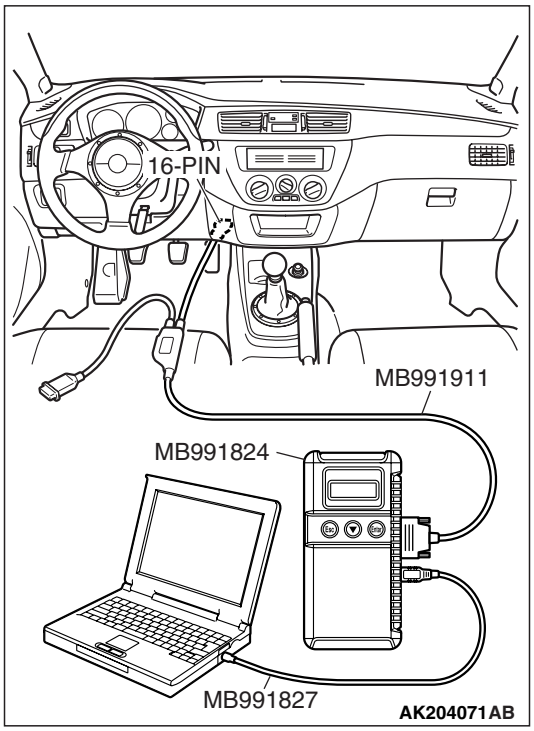

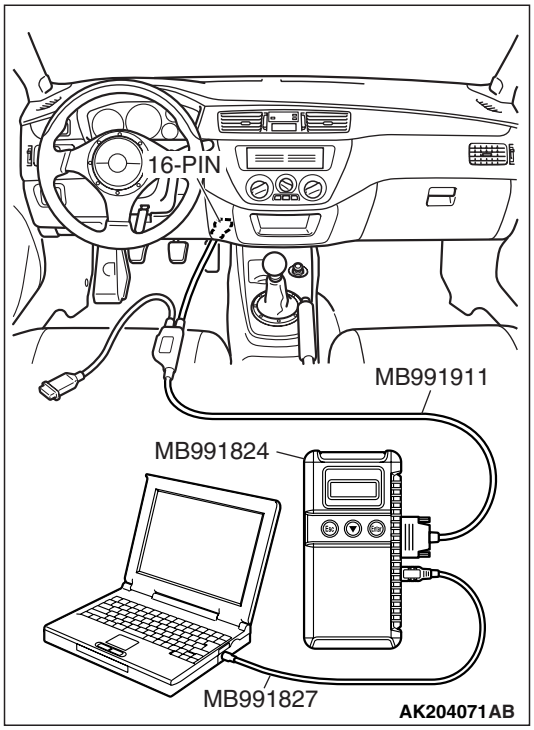

STEP 4. Using scan tool MB991958, check actuator test.

(1) Turn the ignition switch to the "ON" position.

(2) Check the following items in the actuator test. Refer to GROUP 13A, Actuator Test Reference Table P.13A-837.

a. Item 07: Fuel pump.

(3) Turn the ignition switch to the "LOCK" (OFF) position.

Q: Is the actuator operating properly?

YES : Go to Step 5.

NO : Repair or replace it. Then confirm that the malfunction symptom is eliminated.

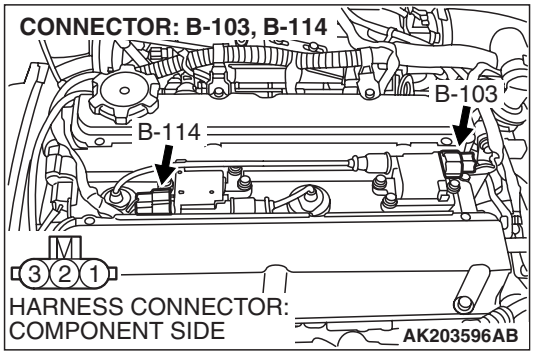

STEP 5. Check the ignition system.

(1) Connect the timing light to terminal No. 1 of the ignition coil connectors B-103 or B-114, in order.

(2) Crank the engine.

- The timing light flashes.

(3) Turn the ignition switch to the "LOCK" (OFF) position.

Q: Does the timing light flash?

YES : Go to Step 6.

NO : Refer to INSPECTION PROCEDURE 33 –Ignition Circuit System P.13A-813.

STEP 6. Check the ignition timing.

(1) Check the ignition timing at cranking.

Standard value: 5° BTDC ±3°

Q: Is the ignition timing normal?

YES : Go to Step 7.

NO : Check that the crankshaft position sensor and timing belt cover are in the correct position. Then confirm that the malfunction symptom is eliminated.

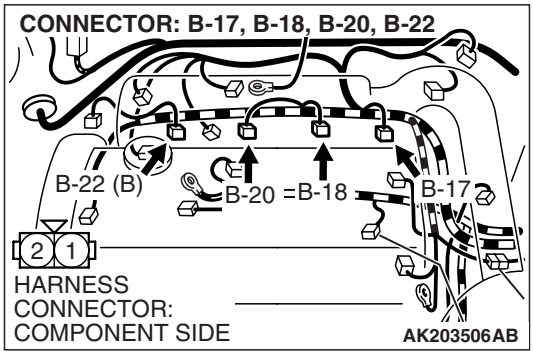

STEP 7. Check harness connectors B-17 or B-18 or B-20 or B-22 at injector for damage.

Q: Is the harness connector in good condition?

YES : Go to Step 8.

NO : Repair or replace it. Refer to GROUP 00E, Harness Connector Inspection P.00E-2. Then confirm that the malfunction symptom is eliminated.

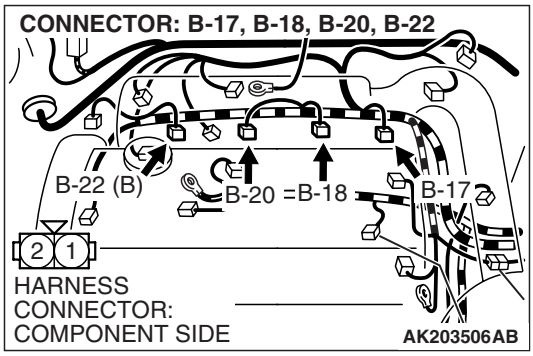

STEP 8. Check the injector.

(1) Disconnect the injector connectors B-17, B-18, B-20 and B-22.

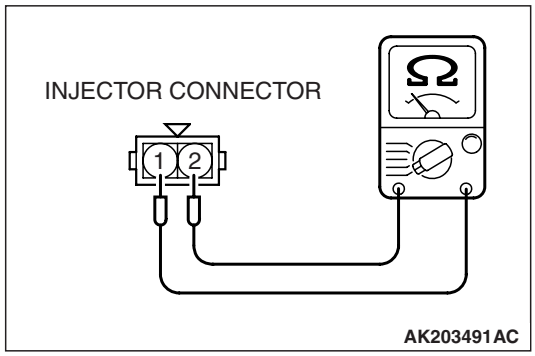

(2) Measure the resistance between each injector side connector terminal No. 1 and No. 2.

Standard value: 2 – 3 ohms [at 20° C (68° F)]

Q: Is the resistance between 2 and 3 ohms [at 20° C (68° F)]?

YES : Go to Step 9.

NO : Replace the injector. Then confirm that the malfunction symptom is eliminated.

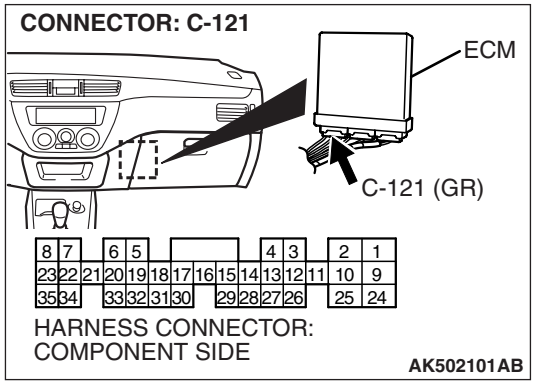

STEP 9. Check connector C-121 at ECM for damage.

Q: Is the connector in good condition?

YES : Go to Step 10.

NO : Repair or replace it. Refer to GROUP 00E, Harness Connector Inspection P.00E-2. Then confirm that the malfunction symptom is eliminated.

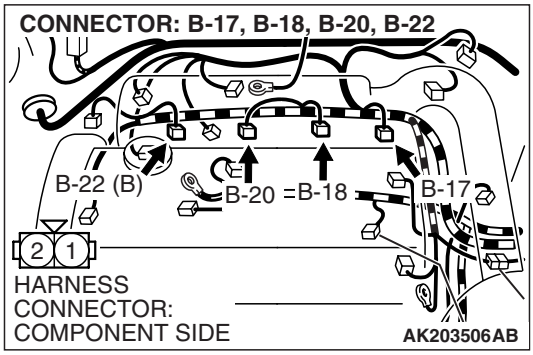

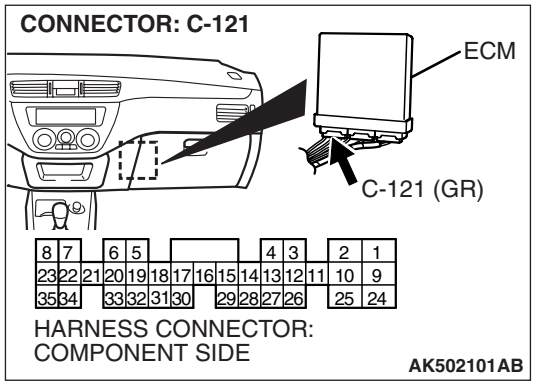

STEP 10. Check for harness damage between injector connector and ECM connector.

a. Check the harness wire between injector connector B-22 (terminal No. 2) and ECM connector C-121 (terminal No. 1) at No. 1 cylinder.
b. Check the harness wire between injector connector B-20 (terminal No. 2) and ECM connector C-121 (terminal No. 9) at No. 2 cylinder.
c. Check the harness wire between injector connector B-18 (terminal No. 2) and ECM connector C-121 (terminal No. 24) at No. 3 cylinder.
d. Check the harness wire between injector connector B-17 (terminal No. 2) and ECM connector C-121 (terminal No. 2) at No. 4 cylinder.

Q: Is the harness wire in good condition?

YES : Check the following items, and repair or replace the defective items.
a. Check the ignition coil, spark plugs and spark plug cables.
b. Check if the injectors are clogged.
c. Check if fuel is contaminated.
d. Check compression.

Then confirm that the malfunction symptom is eliminated.

NO : Repair it. Then confirm that the malfunction symptom is eliminated.

INSPECTION PROCEDURE 6: Starts Up and Dies

COMMENT

- In such cases as the above, the cause is usually improper air/fuel mixture. It is possible, though less likely, that the spark plugs are generating sparks but the sparks are weak.

TROUBLESHOOTING HINTS (The most likely causes for this case:)

- Malfunction of the ignition system.
- Malfunction of the injector system.
- Contaminated fuel.
- Poor compression.
- Malfunction of the ECM.

DIAGNOSIS

Required Special Tools:

- MB991958: Scan Tool (M.U.T.-III Sub Assembly)
  - MB991824: V.C.I.
  - MB991827: USB Cable
  - MB991911: Main Harness B

STEP 1. Measure the battery positive voltage.

(1) Measure the battery positive voltage during cranking.
- The voltage should remain greater than 8 volts while the engine is cranked.

Q: Does the voltage remain greater than 8 volts while the engine is cranked?

YES : Go to Step 2.

NO : Refer to GROUP 54A, Battery –Battery check P.54A-4.

STEP 2. Using scan tool MB991958, read the diagnostic trouble code (DTC).

⚠ CAUTION

To prevent damage to scan tool MB991958, always turn the ignition switch to the "LOCK" (OFF) position before connecting or disconnecting scan tool MB991958.

(1) Connect scan tool MB991958 to the data link connector.
(2) Turn the ignition switch to the "ON" position.
(3) Read the DTC.
(4) Turn the ignition switch to the "LOCK" (OFF) position.

Q: Is DTC set?

YES : Refer to GROUP 13A, Diagnostic Trouble Code Chart P.13A-41.

NO : Go to Step 3.

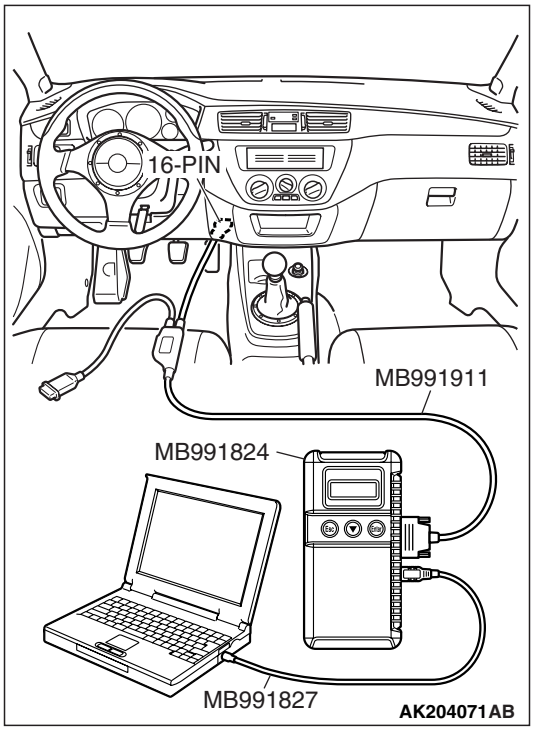

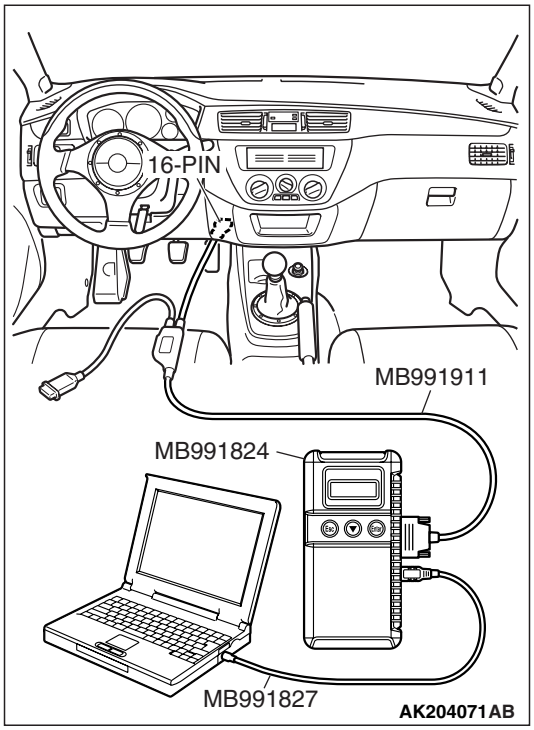

STEP 3. Using scan tool MB991958, check actuator test.

(1) Turn the ignition switch to the "ON" position.

(2) Check the following items in the actuator test. Refer to GROUP 13A, Actuator Test Reference Table P.13A-837.

a. Item 07: Fuel Pump.

(3) Turn the ignition switch to the "LOCK" (OFF) position.

Q: Is the actuator operating properly?

YES : Go to Step 4.

NO : Repair or replace it. Then confirm that the malfunction symptom is eliminated.

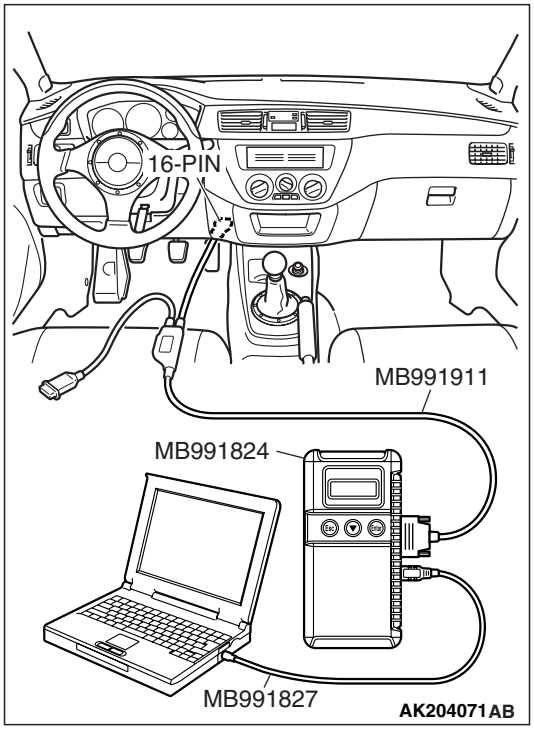

STEP 4. Using scan tool MB991958, check data list.

(1) Turn the ignition switch to the "ON" position.

(2) Check the following items in the data list. Refer to GROUP 13A, Data List Reference Table P.13A-823.

a. Item 21: Engine Coolant Temperature Sensor.

(3) Turn the ignition switch to the "LOCK" (OFF) position.

Q: Is the sensor operating properly?

YES : Go to Step 5.

NO : Repair or replace it. Then confirm that the malfunction symptom is eliminated.

STEP 5. Check the engine start-ability.

(1) Depress the accelerator pedal slightly, and start the engine.

Q: Is the start ability good?

YES : Go to Step 6.

NO : Go to Step 7.

TSB Revision

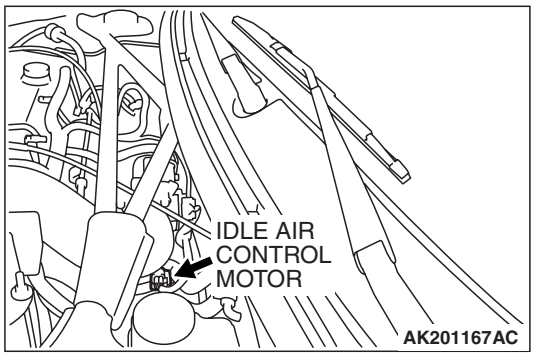

STEP 6. Check the idle air control (IAC) motor operation sound.

(1) Check that the engine coolant temperature is 20° C (68° F) or below.

NOTE: If necessary, you can disconnect the engine coolant temperature sensor connector and connect the harness side of the connector to another engine coolant temperature sensor that is at 20°C (68°F) or below.

(2) Check that the operation sound of the IAC motor can be heard after the ignition is switched to the "ON" position (but without starting the engine).
- An operation sound is heard.

Q: Did you hear the operation sound?

YES : Refer to GROUP 13A, On-vehicle Service –Clean the throttle valve area P.13A-862.

NO : Refer to GROUP 13A, DTC P0506 Idle Control System RPM Lower Than Expected P.13A-584, DTC P0507 Idle Control System RPM Higher Than Expected P.13A-595.

STEP 7. Check the ignition timing.

(1) Check the ignition timing at cranking.

Standard value: 5° BTDC ±3°

Q: Is the ignition timing normal?

YES : Go to Step 8.

NO : Check that the crankshaft position sensor and timing belt cover are in the correct position. Then confirm that the malfunction symptom is eliminated.

STEP 8. Check harness connectors B-22 or B-20 or B-18 or B-17 at injector for damage.

Q: Is the harness connector in good condition?

YES : Go to Step 9.

NO : Repair or replace it. Refer to GROUP 00E, Harness Connector Inspection P.00E-2. Then confirm that the malfunction symptom is eliminated.

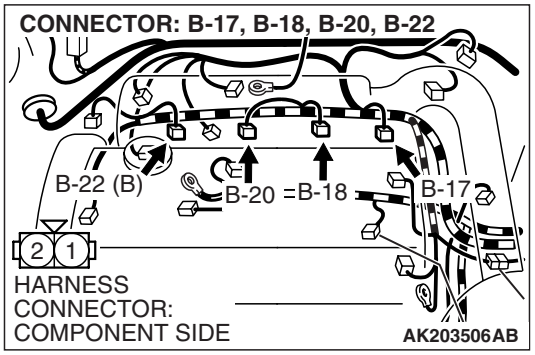

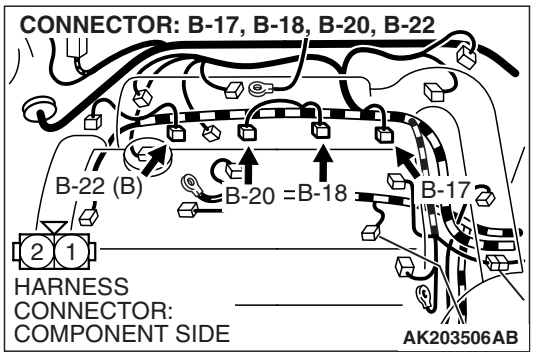

STEP 9. Check the injector.

(1) Disconnect the injector connectors B-17, B-18, B-20 and B-22.

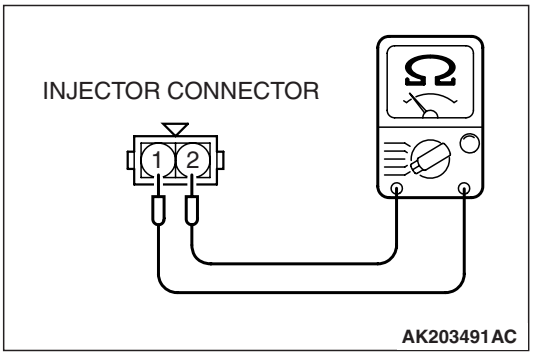

(2) Measure the resistance between each injector side connector terminal No. 1 and No. 2.

Standard value: 2 – 3 ohms [at 20° C (68° F)]

Q: Is the resistance between 2 and 3 ohms [at 20° C (68° F)]?

YES : Go to Step 10.

NO : Replace the injector. Then confirm that the malfunction symptom is eliminated.

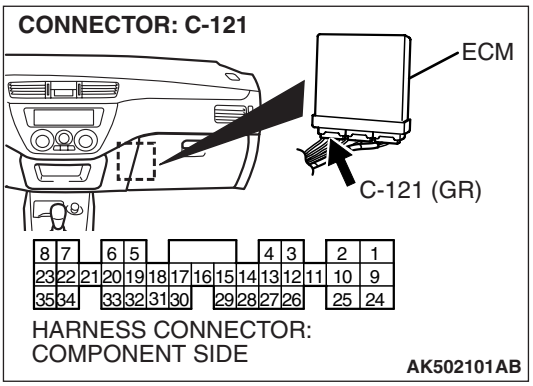

STEP 10. Check connector C-121 at ECM for damage.

Q: Is the connector in good condition?

YES : Go to Step 11.

NO : Repair or replace it. Refer to GROUP 00E, Harness Connector Inspection P.00E-2. Then confirm that the malfunction symptom is eliminated.

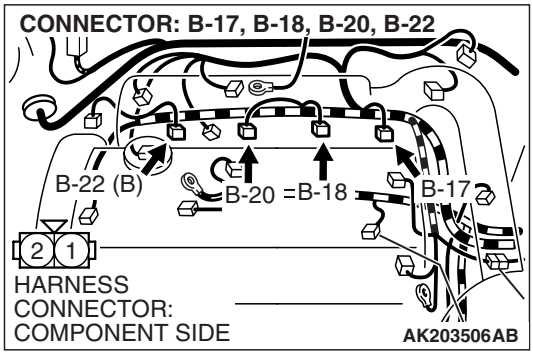

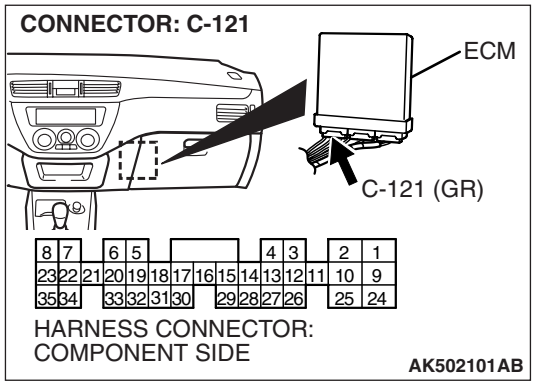

STEP 11. Check for harness damage between injector connector and ECM connector.

a. Check the harness wire between injector connector B-22 (terminal No. 2) and ECM connector C-121 (terminal No. 1) at No. 1 cylinder.
b. Check the harness wire between injector connector B-20 (terminal No. 2) and ECM connector C-121 (terminal No. 9) at No. 2 cylinder.
c. Check the harness wire between injector connector B-18 (terminal No. 2) and ECM connector C-121 (terminal No. 24) at No. 3 cylinder.
d. Check the harness wire between injector connector B-17 (terminal No. 2) and ECM connector C-121 (terminal No. 2) at No. 4 cylinder.

Q: Is the harness wire in good condition?

YES : Check the following items, and repair or replace the defective items.
a. Check the ignition coil, spark plugs and spark plug cables.
b. Check if the injectors are clogged.
c. Check compression pressure.
d. Check fuel lines for clogging.
e. Check if the foreign materials (water, kerosene, etc.) got into fuel.

Then confirm that the malfunction symptom is eliminated.

NO : Repair it. Then confirm that the malfunction symptom is eliminated.

INSPECTION PROCEDURE 7: Hard Starting

COMMENT

- In cases such as the above, the cause is usually either weak spark, improper air-fuel mixture or low compression.

TROUBLESHOOTING HINTS (The most likely causes for this case:)

- Malfunction of the ignition system.
- Malfunction of the injector system.
- Poor fuel quality. (Contamination)
- Poor compression.

DIAGNOSIS

Required Special Tools:

- MB991958: Scan Tool (M.U.T.-III Sub Assembly)
  - MB991824: V.C.I.
  - MB991827: USB Cable
  - MB991911: Main Harness B

STEP 1. Measure the battery positive voltage.

(1) Measure the battery positive voltage during cranking.
- The voltage should remain greater than 8 volts while the engine is cranked.

Q: Does the voltage remain greater than 8 volts while the engine is cranked?

YES : Go to Step 2.
NO : Refer to GROUP 54A, Batter –Battery check P.54A-4.

STEP 2. Using scan tool MB991958, read the diagnostic trouble code (DTC).

⚠ CAUTION
To prevent damage to scan tool MB991958, always turn the ignition switch to the "LOCK" (OFF) position before connecting or disconnecting scan tool MB991958.

(1) Connect scan tool MB991958 to the data link connector.
(2) Turn the ignition switch to the "ON" position.
(3) Read the DTC.
(4) Turn the ignition switch to the "LOCK" (OFF) position.

Q: Is DTC set?

YES : Refer to GROUP 13A, Diagnostic Trouble Code Chart P.13A-41.
NO : Go to Step 3.

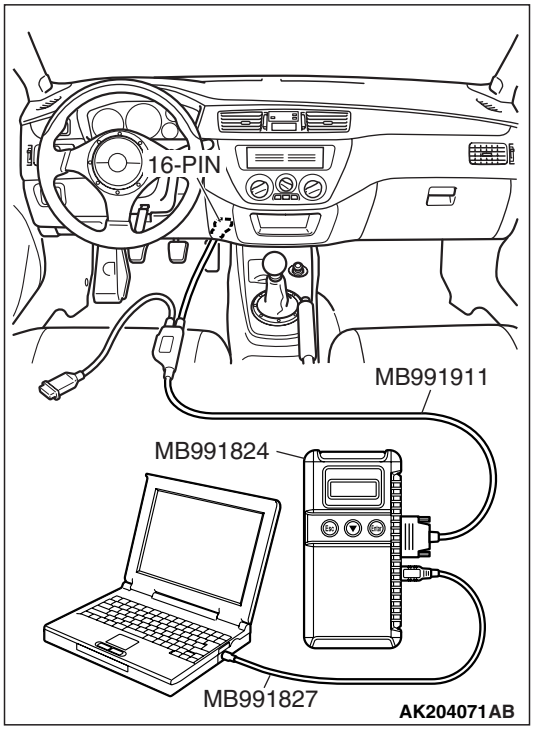

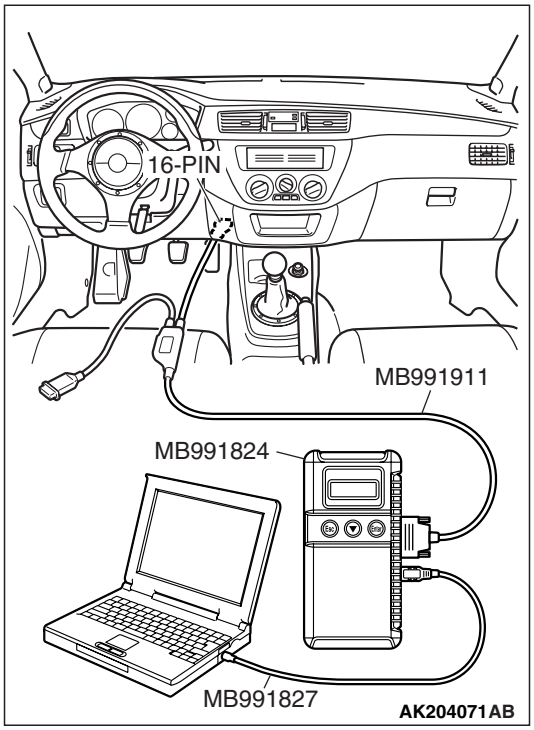

STEP 3. Using scan tool MB991958, check actuator test.

(1) Turn the ignition switch to the "ON" position.

(2) Check the following items in the actuator test. Refer to GROUP 13A, Actuator Test Reference Table P.13A-837.

a. Item 07: Fuel Pump.

(3) Turn the ignition switch to the "LOCK" (OFF) position.

Q: Is the actuator operating properly?

YES : Go to Step 4.

NO : Repair or Replace. Then confirm that the malfunction symptom is eliminated.

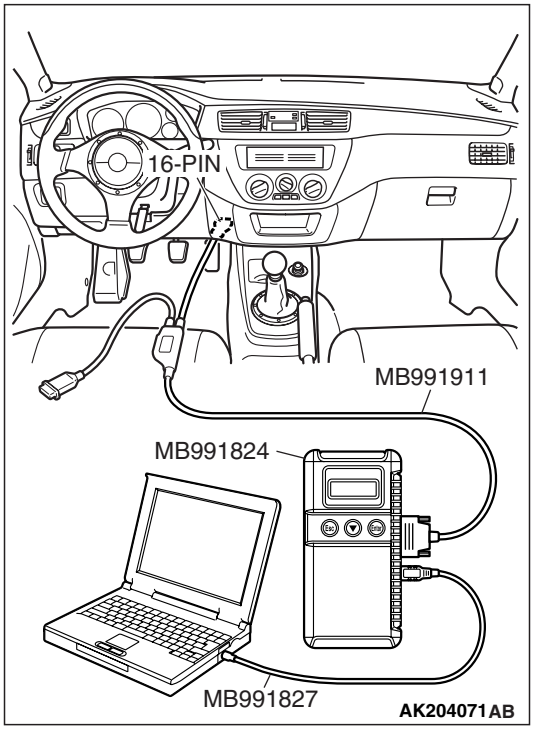

STEP 4. Using scan tool MB991958, check data list.

(1) Turn the ignition switch the "ON" position.

(2) Check the following items in the data list. Refer to GROUP 13A, Data List Reference Table P.13A-823.

a. Item 21: Engine Coolant Temperature Sensor.

(3) Turn the ignition switch to the "LOCK" (OFF) position.

Q: Is the sensor operating properly?

YES : Go to Step 5.

NO : Repair or Replace. Then confirm that the malfunction symptom is eliminated.

STEP 5. Check the ignition timing.

(1) Check the ignition timing at cranking.

Standard value: 5° BTDC ±3°

Q: Is the ignition timing normal?

YES : Go to Step 6.

NO : Check that the crankshaft position sensor and timing belt cover are in the correct position. Then confirm that the malfunction symptom is eliminated.

STEP 6. Check harness connectors B-22 or B-20 or B-18 or B-17 at injector for damage.

Q: Is the harness connector in good condition?

YES : Go to Step 7.

NO : Repair or replace it. Refer to GROUP 00E, Harness Connector Inspection P.00E-2. Then confirm that the malfunction symptom is eliminated.

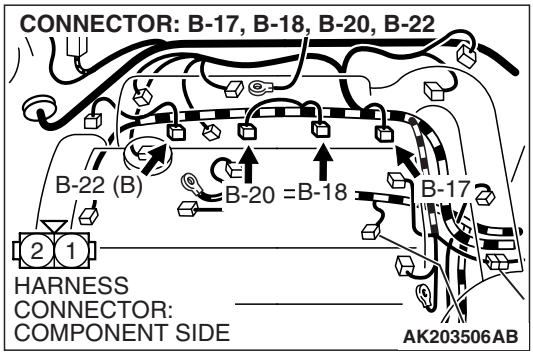

STEP 7. Check the injector.

(1) Disconnect the injector connectors B-17, B-18, B-20 and B-22.

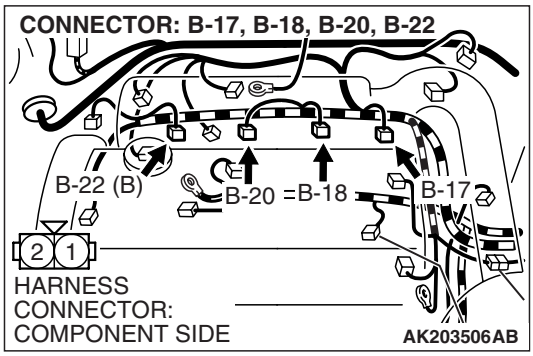

(2) Measure the resistance between each injector side connector terminals No. 1 and No. 2.

Standard value: 2 – 3 ohms [at 20° C (68° F)]

Q: Is the resistance between 2 and 3 ohms [at 20° C (68° F)]?

YES : Go to Step 8.

NO : Replace the injector. Then confirm that the malfunction symptom is eliminated.

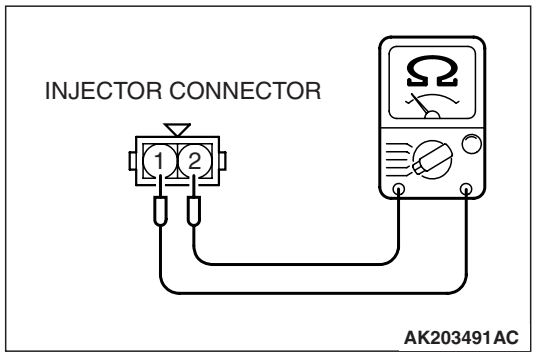

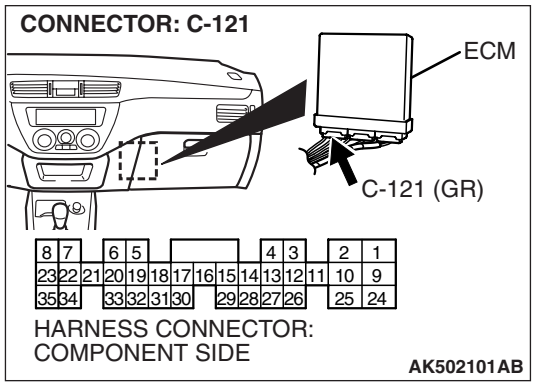

STEP 8. Check connector C-121 at ECM for damage.

Q: Is the connector in good condition?

YES : Go to Step 9.

NO : Repair or replace it. Refer to GROUP 00E, Harness Connector Inspection P.00E-2. Then confirm that the malfunction symptom is eliminated.

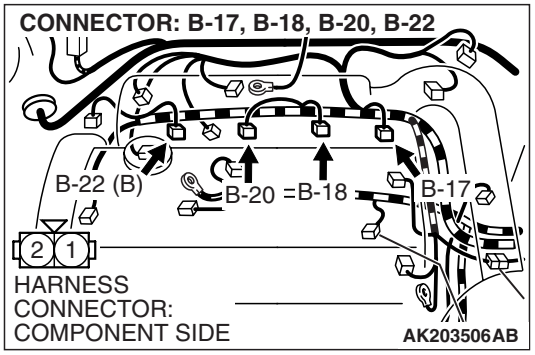

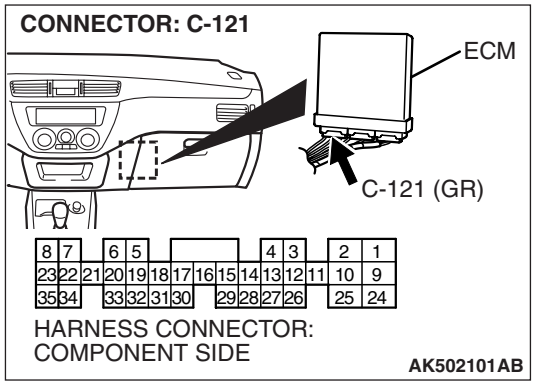

STEP 9. Check for harness damage between injector connector and ECM connector.

a. Check the harness wire between injector connector B-22 (terminal No. 2) and ECM connector C-121 (terminal No. 1) at No. 1 cylinder.
b. Check the harness wire between injector connector B-20 (terminal No. 2) and ECM connector C-121 (terminal No. 9) at No. 2 cylinder.
c. Check the harness wire between injector connector B-18 (terminal No. 2) and ECM connector C-121 (terminal No. 24) at No. 3 cylinder.
d. Check the harness wire between injector connector B-17 (terminal No. 2) and ECM connector C-121 (terminal No. 2) at No. 4 cylinder.

Q: Is the harness wire in good condition?

YES : Check the following items, and repair or replace the defective items.

a. Check the ignition coil, spark plugs and spark plug cables.
b. Check if the injectors are clogged.
c. Check compression pressure.
d. Check if the foreign materials (water, kerosene, etc.) got into fuel.

Then confirm that the malfunction symptom is eliminated.

NO : Repair it. Then confirm that the malfunction symptom is eliminated.

INSPECTION PROCEDURE 8: Unstable Idle (Rough Idle, Hunting)

COMMENT

- In cases such as the above, the cause is probably the air/fuel mixture or idle air control motor. Other systems affecting idle quality include the ignition system and compression.

TROUBLESHOOTING HINTS (The most likely causes for this case:)

- Malfunction of the ignition system.
- Malfunction of air/fuel ratio control system.
- Malfunction of the IAC system.
- Malfunction of the evaporative emission purge solenoid system.
- Poor compression pressure.
- Vacuum leak.
- Malfunction of the EGR vacuum regulator solenoid valve system.

DIAGNOSIS

Required Special Tools:

- MB991958: Scan Tool (M.U.T.-III Sub Assembly)
  - MB991824: V.C.I.
  - MB991827: USB Cable
  - MB991911: Main Harness B

STEP 1. Check if the battery terminal was disconnected.

Q: Has the battery terminal been disconnected lately?

YES : Start the engine and let it run at idle for approximate 10 minutes after engine warm up. Then, if a malfunction occurs, go to Step 2.

NO : Go to Step 2.

STEP 2. Using scan tool MB991958, read the diagnostic trouble code (DTC).

⚠ CAUTION

To prevent damage to scan tool MB991958, always turn the ignition switch is to the "LOCK" (OFF) position before connecting or disconnecting scan tool MB991958.

(1) Connect scan tool MB991958 to the data link connector.
(2) Turn the ignition switch to the "ON" position.
(3) Read the DTC.
(4) Turn the ignition switch to the "LOCK" (OFF) position.

Q: Is DTC set?

YES : Refer to GROUP 13A, Diagnostic Trouble Code Chart P.13A-41.

NO : Go to Step 3.

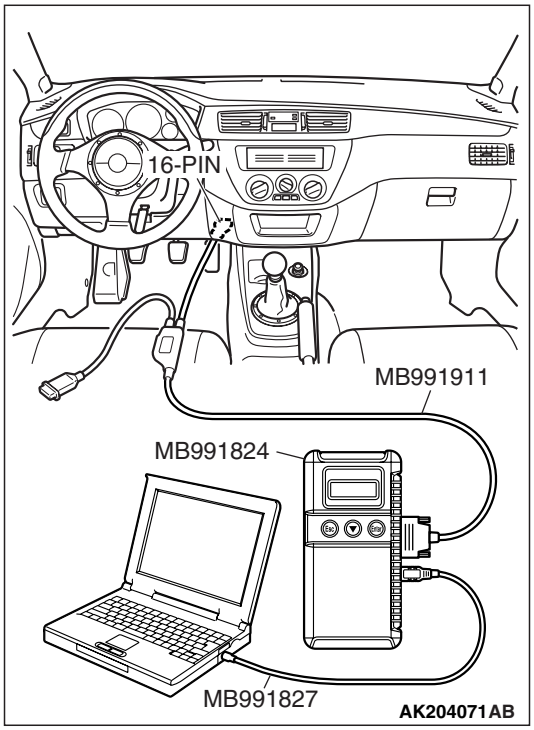

STEP 3. Check the engine idling state.

Q: Is it hunting remarkably?

YES : Go to Step 4.
NO : Go to Step 5.

STEP 4. Check the following items.

(1) Carry out the following cleaning.
  a. Clean the throttle valve area (Refer to GROUP 13A, On-vehicle Service –Throttle Body Cleaning. P.13A-862).

(2) After cleaning, confirm that the malfunction symptom is eliminated.

Q: Is the malfunction symptom resolved?

YES : The check is completed.
NO : Check the following items, and repair or replace the defective items.
  a. Broken intake manifold gasket.
  b. Broken air intake hose.
  c. Broken vacuum hose.
  d. Positive crankcase ventilation valve does not operate.

  Then confirm that the malfunction symptom is eliminated.

STEP 5. Check the idle air control (IAC) motor operation sound.

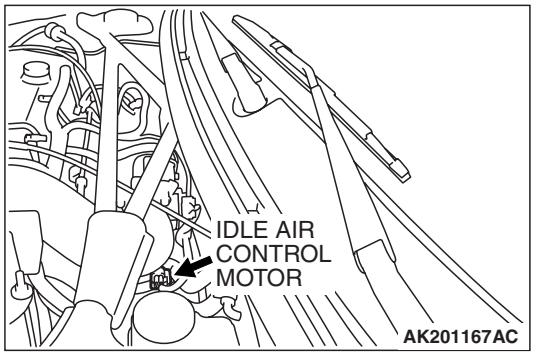

(1) Check that the engine coolant temperature is 20° C (68° F) or below.

NOTE: Disconnecting the engine coolant temperature sensor connector and connecting the harness side of the connector to another engine coolant temperature sensor that is at 20°C (68°F) or below is also acceptable.

(2) Check the operation sound of the IAC motor can be heard after the ignition is switched to the "ON" position (but without starting the engine).
  - An operation sound is heard.

(3) Turn the ignition switch to the "LOCK" (OFF) position.

Q: Did you hear the operation sound?

YES : Go to Step 6.
NO : Refer to GROUP 13A, DTC P0506 –Idle Control System RPM Lower Than Expected P.13A-584, DTC P0507 –Idle Control System RPM Higher Than Expected P.13A-595.

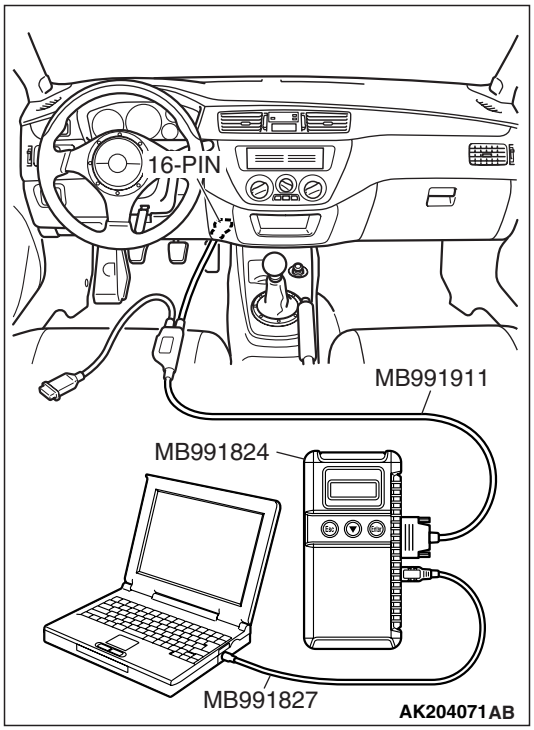

STEP 6. Using scan tool MB991958, check actuator test items 01, 02, 03, 04: Injector.

⚠ CAUTION

To prevent damage to scan tool MB991958, always turn the ignition switch to the "LOCK" (OFF) position before connecting or disconnecting scan tool MB991958.

(1) Connect scan tool MB991958 to the data link connector.
(2) Turn the ignition switch to the "ON" position.
(3) Check following items in the actuator test. Refer to GROUP 13A, Actuator Test Reference Table P.13A-837.
  a. Items 01, 02, 03, 04: Injector.
(4) Turn the ignition switch to the "LOCK" (OFF) position.

Q: Is the actuator operating properly?

YES : Go to Step 7.
NO : Refer to GROUP 13A, DTC P0201, P0202, P0203, P0204 –Injector Circuit P.13A-323.

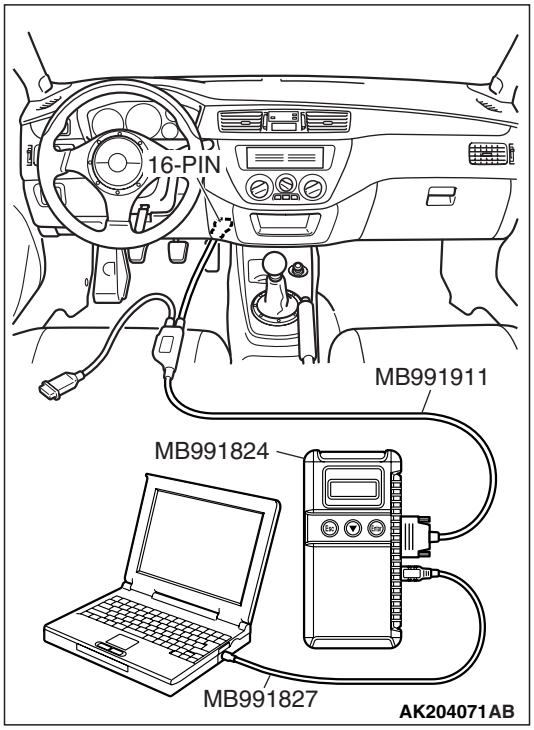

STEP 7. Using scan tool MB991958, check data list.

(1) Turn the ignition switch to the "ON" position.
(2) Check the following items in the data list. Refer to GROUP 13A, Data List Reference Table P.13A-823.
  a. Item 13: Intake Air Temperature Sensor.
  b. Item 25: Barometric Pressure Sensor.
  c. Item 21: Engine Coolant Temperature Sensor.
  d. Item 59: Heated Oxygen Sensor (rear).
  e. Item 11: Heated Oxygen Sensor (front).
  f. Item 27: Power Steering Pressure Switch.
  g. Item 28: A/C Switch.
(3) Turn the ignition switch to the "LOCK" (OFF) position.

Q: Are they operating properly?

YES : Go to Step 8.
NO : Repair or replace it. Then confirm that the malfunction symptom is eliminated.

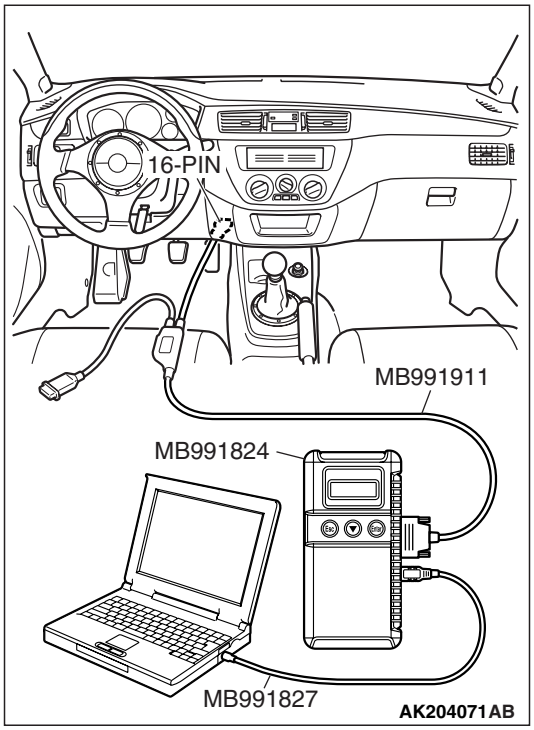

STEP 8. Using scan tool MB991958, check actuator test.

(1) Turn the ignition switch to the "ON" position.

(2) Check the following items in the actuator test. Refer to GROUP 13A, Actuator Test Reference Table P.13A-837.

a. Item 08: Evaporative Emission Purge Solenoid.

b. Item 10: EGR Vacuum Regulator Solenoid Valve.

(3) Turn the ignition switch to the "LOCK" (OFF) position.

Q: Are they operating properly?

YES : Go to Step 9.

NO : Repair or replace it. Then confirm that the malfunction symptom is eliminated.

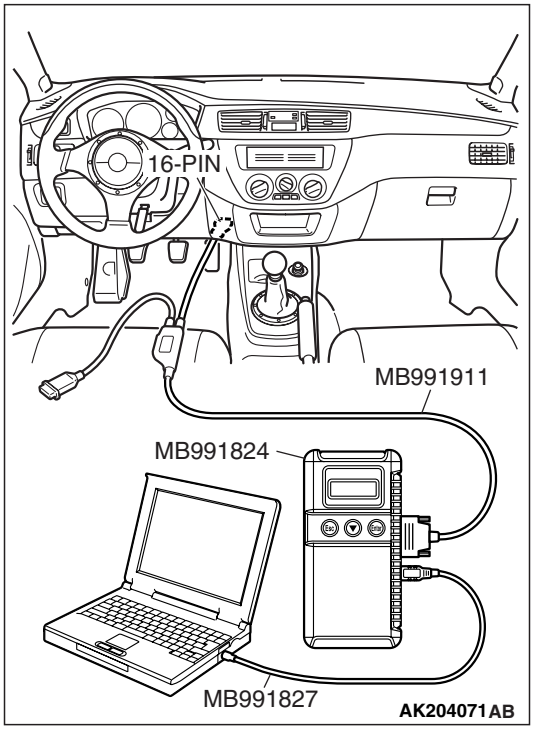

STEP 9. Using scan tool MB991958, check data list.

(1) Turn the ignition switch to the "ON" position.

(2) Check the following items in the data list. Refer to GROUP 13A, Data List Reference Table P.13A-823.

a. Item 45: Idle Air Control Motor Position.

(3) Turn the ignition switch to the "LOCK" (OFF) position.

Q: Is the actuator operating properly?

YES : Go to Step 10.

NO : Adjust the basic idle speed. Refer to GROUP 13A, On-vehicle Service –Basic Idle Speed Adjustment P.13A-864. After adjusting, confirm.

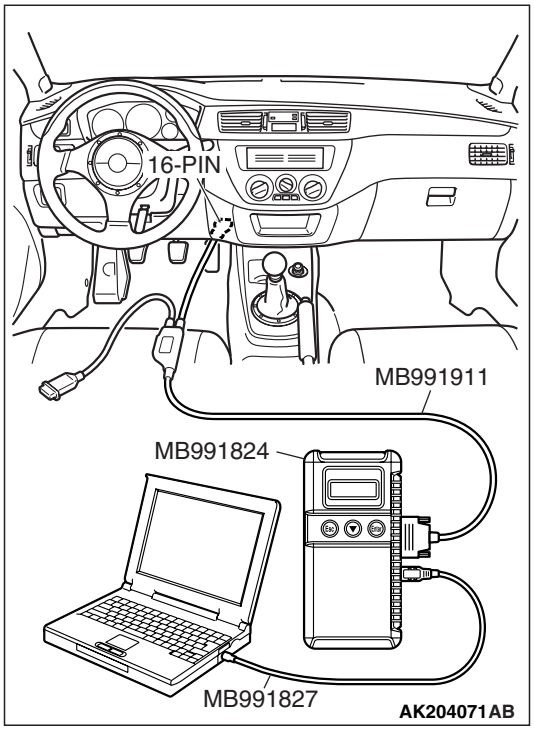

STEP 10. Using scan tool MB991958, check data list.

(1) Turn the ignition switch to the "ON" position.

(2) Check the following items of the data list. Refer to, Data List Reference Table P.13A-823.

a. Item 11: Heated Oxygen Sensor (front).

- Voltage should fluctuate between 0 –0.4 volt and 0.6 – 1.0 volt while idling after the engine has been warmed.

(3) Turn the ignition switch to the "LOCK" (OFF) position.

Q: Is the sensor operating properly?

YES : Go to Step 12.

NO : Go to Step 11.

STEP 11. Check the fuel pressure.

Refer to GROUP 13A, On-vehicle Service –Fuel Pressure Test P.13A-865.

Q: Is the fuel pressure normal?

YES : a. Check the following items, and repair or replace the defective items.

a. Vacuum leak.

- Broken intake manifold gasket.
- Broken air intake hose.
- Broken vacuum hose.
- Positive crankcase ventilation valve does not operate.

b. Injector clogged.

Then confirm that the malfunction symptom is eliminated.

NO : Repair or replace it. Then confirm that the malfunction symptom is eliminated.

STEP 12. Check the ignition timing.
Refer to GROUP 11A, On-vehicle Service –Ignition Timing Check P.11A-8.

Q: Is the ignition timing normal?

YES : Check the following items, and repair or replace the defective items.
a. Check the ignition coil, spark plugs, spark plug cables.
b. Check the purge control system.
c. Check compression pressure.
d. Check if the foreign materials (water, kerosene, etc.) got into fuel.
e. Check the EGR control system.

Then confirm that the malfunction symptom is eliminated.

NO : Check that the crankshaft position sensor and timing belt cover are in the correct position. Then confirm that the malfunction symptom is eliminated.

INSPECTION PROCEDURE 9: Idle Speed is High (Improper Idle Speed)

COMMENT

- In such cases as the above, the cause is probably that the intake air volume during idle is too great.

TROUBLESHOOTING HINTS (The most likely causes for this case:)

- Malfunction of the IAC system.
- Malfunction of the throttle body.

DIAGNOSIS

Required Special Tools:

- MB991958: Scan Tool (M.U.T.-III Sub Assembly)
  - MB991824: V.C.I.
  - MB991827: USB Cable
  - MB991911: Main Harness B

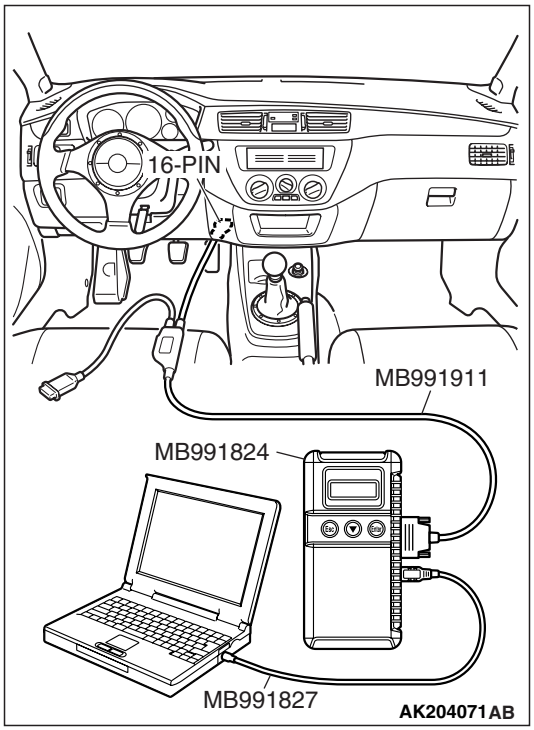

STEP 1. Using scan tool MB991958, read the diagnostic trouble code (DTC).

⚠ CAUTION

To prevent damage to scan tool MB991958, always turn the ignition switch to the "LOCK" (OFF) position before connecting or disconnecting scan tool MB991958.

(1) Connect scan tool MB991958 to the data link connector.
(2) Turn the ignition switch to the "ON" position.
(3) Read the DTC.
(4) Turn the ignition switch to the "LOCK" (OFF) position.

Q: Is DTC set?

YES : Refer to GROUP 13A, Diagnostic Trouble Code Chart P.13A-41.

NO : Go to Step 2.

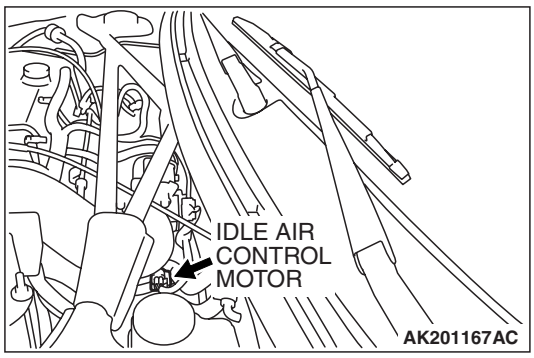

STEP 2. Check the idle air control (IAC) motor operation sound.

(1) Check that the engine coolant temperature is 20° C (68° F) or below.

NOTE: Disconnecting the engine coolant temperature sensor connector and connecting the harness side of the connector to another engine coolant temperature sensor that is at 20°C (68°F) or below is also acceptable.

(2) Check the operation sound of the IAC motor can be heard after the ignition is switched to the "ON" position (but without starting the engine).
- An operation sound should be heard.

(3) Turn the ignition switch to the "LOCK" (OFF) position.

Q: Did you hear the operation sound?

YES : Go to Step 3.

NO : Refer to GROUP 13A, DTC P0506 –Idle Control System RPM Lower Than Expected P.13A-584, DTC P0507 –Idle Control System RPM Higher Than Expected P.13A-595.

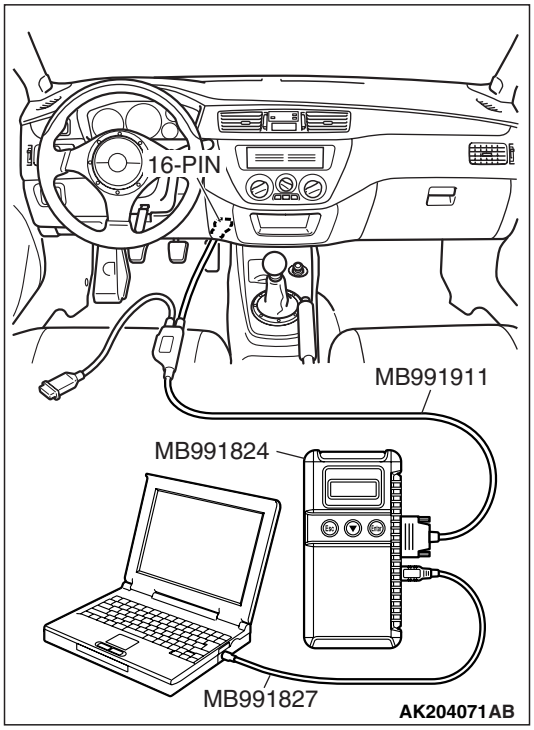

STEP 3. Using scan tool MB991958, check data list.

⚠ CAUTION

To prevent damage to scan tool MB991958, always turn the ignition switch to the "LOCK" (OFF) position before connecting or disconnecting scan tool MB991958.

(1) Connect scan tool MB991958 to the data link connector.
(2) Turn the ignition switch to the "ON" position.
(3) Check the following items in the data list. Refer to GROUP 13A, Data List Reference Table P.13A-823.
  a. Item 21: Engine Coolant Temperature Sensor.
  b. Item 28: A/C Switch.
(4) Turn the ignition switch to the "LOCK" (OFF) position.

Q: Are they operating properly?

YES : Go to Step 4.
NO : Repair or replace it. Then confirm that the malfunction symptom is eliminated.

STEP 4. Adjust the basic idle speed.

Refer to GROUP 13A, On-vehicle Service –Basic Idle Speed Adjustment for the adjustment procedure P.13A-864.

Standard value: 850 ±50 r/min

Q: Is the Idle speed normal?

YES : Refer to GROUP 13A, On-vehicle Service –Clean the throttle valve area P.13A-862.
NO : The check is completed.

INSPECTION PROCEDURE 10: Idle Speed is Low (Improper Idle Speed)

COMMENT

- In cases such as the above, the cause is probably that the intake air volume during idle is too small.

TROUBLESHOOTING HINTS (The most likely causes for this case:)

- Malfunction of the IAC system.
- Malfunction of the throttle body.

DIAGNOSIS

Required Special Tools:

- MB991958: Scan Tool (M.U.T.-III Sub Assembly)
  - MB991824: V.C.I.
  - MB991827: USB Cable
  - MB991911: Main Harness B

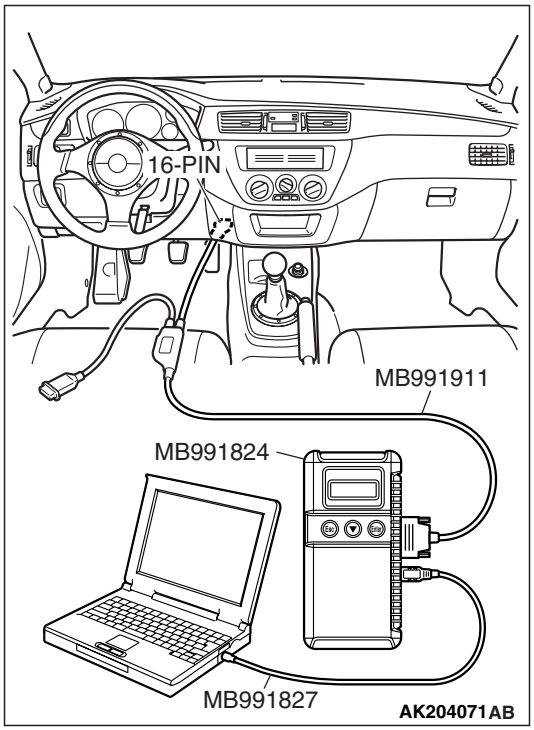

STEP 1. Using scan tool MB991958, read the diagnostic trouble code (DTC).

⚠ CAUTION

To prevent damage to scan tool MB991958, always turn the ignition switch to the "LOCK" (OFF) position before connecting or disconnecting scan tool MB991958.

(1) Connect scan tool MB991958 to the data link connector.
(2) Turn the ignition switch to the "ON" position.
(3) Read the DTC.
(4) Turn the ignition switch to the "LOCK" (OFF) position.

Q: Is DTC set?

YES : Refer to GROUP 13A, Diagnostic Trouble Code Chart P.13A-41.

NO : Go to Step 2.

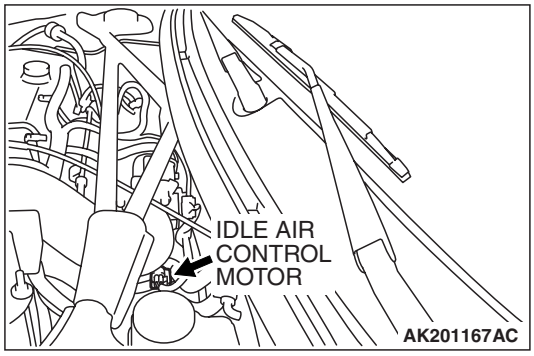

STEP 2. Check the idle air control (IAC) motor operation sound.

(1) Check that the engine coolant temperature is 20° C (68° F) or below.

NOTE: If necessary, you can disconnect the engine coolant temperature sensor connector and connect the harness side of the connector to another engine coolant temperature sensor that is at 20°C (68°F) or below.

(2) Check that the operation sound of the IAC motor can be heard after the ignition is switched to the "ON" position (but without starting the engine).
- An operation sound should be heard.

(3) Turn the ignition switch to the "LOCK" (OFF) position.

Q: Did you hear the operation sound?

YES : Go to Step 3.

NO : Refer to GROUP 13A, DTC P0506 –Idle Control System RPM Lower Than Expected P.13A-584, DTC P0507 –Idle Control System RPM Higher Than Expected P.13A-595.

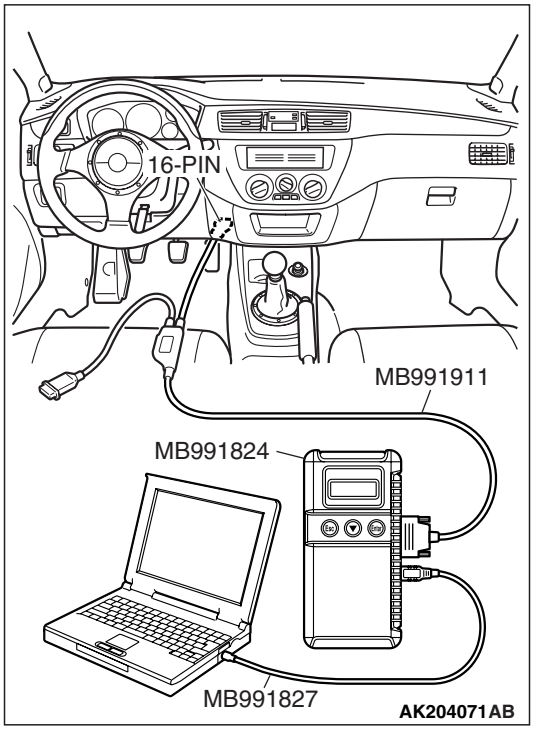

STEP 3. Using scan tool MB991958, check data list.

⚠ CAUTION

To prevent damage to scan tool MB991958, always turn the ignition switch to the "LOCK" (OFF) position before connecting or disconnecting scan tool MB991958.

(1) Connect scan tool MB991958 to the data link connector.
(2) Turn the ignition switch to the "ON" position.
(3) Check the following item in the data list. Refer to GROUP 13A, Data List Reference Table P.13A-823.
  a. Item 21: Engine Coolant Temperature Sensor.
(4) Turn the ignition switch to the "LOCK" (OFF) position.

Q: Are they operating properly?

YES : Go to Step 4.
NO : Repair or replace it. Then confirm that the malfunction symptom is eliminated.

STEP 4. Adjust the basic idle speed.

Refer to GROUP 13A, On-vehicle Service –Basic Idle Speed Adjustment for the adjustment procedure P.13A-864.

Standard value: 850 ±50 r/min

Q: Is the idle speed normal?

YES : Refer to GROUP 13A, On-vehicle Service –Clean the throttle valve area P.13A-862.
NO : The check is completed.

INSPECTION PROCEDURE 11: When The Engine is Cold, It Stalls at Idle (Die Out)

COMMENT

- In such cases as the above, the air/fuel mixture may be inappropriate when the engine is cold.

TROUBLESHOOTING HINTS (The most likely causes for this case:)

- Malfunction of the IAC system.
- Malfunction of the throttle body.
- Malfunction of the injector system.
- Malfunction of the ignition system.

DIAGNOSIS

Required Special Tools:

- MB991958: Scan Tool (M.U.T.-III Sub Assembly)
  - MB991824: V.C.I.
  - MB991827: USB Cable
  - MB991911: Main Harness B

STEP 1. Check if the battery terminal is disconnected.

Q: Has the battery terminal been disconnected lately?

YES : Start the engine and let it run at idle for approximate 10 minutes after engine warm up. Then, if a malfunction occurs, go to Step 2.

NO : Go to Step 2

STEP 2. Using scan tool MB991958, read the diagnostic trouble code (DTC).

⚠ CAUTION

To prevent damage to scan tool MB991958, always turn the ignition switch to the "LOCK" (OFF) position before connecting or disconnecting scan tool MB991958.

(1) Connect scan tool MB991958 to the data link connector.
(2) Turn the ignition switch to the "ON" position.
(3) Read the DTC.
(4) Turn the ignition switch to the "LOCK" (OFF) position.

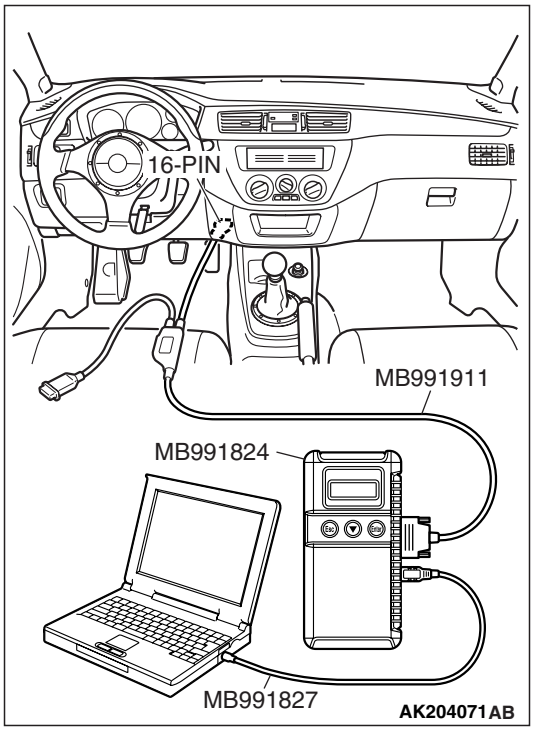

Q: Is DTC set?

YES : Refer to GROUP 13A, Diagnostic Trouble Code Chart P.13A-150.

NO : Go to Step 3.

STEP 3. Checking by operating the accelerator pedal.

Q: Does the engine stall right after the accelerator pedal is released?

YES : Refer to GROUP 13A, On-vehicle Service –Clean the throttle valve area P.13A-862.

NO : Go to Step 4.

STEP 4. Check the engine idling.

Q: Is the idle good enough after warm up?

YES : Go to Step 5.

NO : Refer to, INSPECTION PROCEDURE 8 –Unstable Idle (Rough Idle, Hunting) P.13A-718.

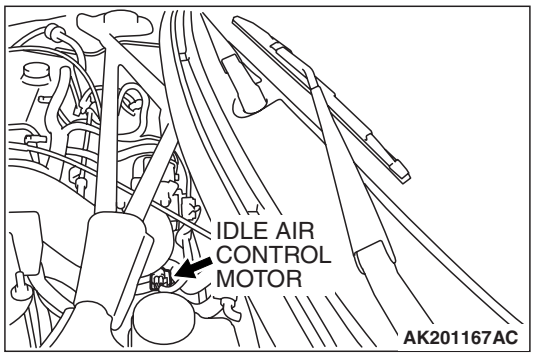

STEP 5. Check the idle air control (IAC) motor operation sound.

(1) Check that the engine coolant temperature is 20° C (68° F) or below.

NOTE: If necessary, you can disconnect the engine coolant temperature sensor connector and connect the harness side of the connector to another engine coolant temperature sensor that is at 20°C (68°F) or below.

(2) Check the operation sound of the IAC motor can be heard after the ignition is switched to the "ON" position (but without starting the engine).
- An operation sound should be heard.

(3) Turn the ignition switch to the "LOCK" (OFF) position.

Q: Did you hear the operation sound?

YES : Go to Step 6.

NO : Refer to GROUP 13A, DTC P0506 –Idle Control System RPM Lower Than Expected P.13A-584, DTC P0507 –Idle Control System RPM Higher Than Expected P.13A-595.

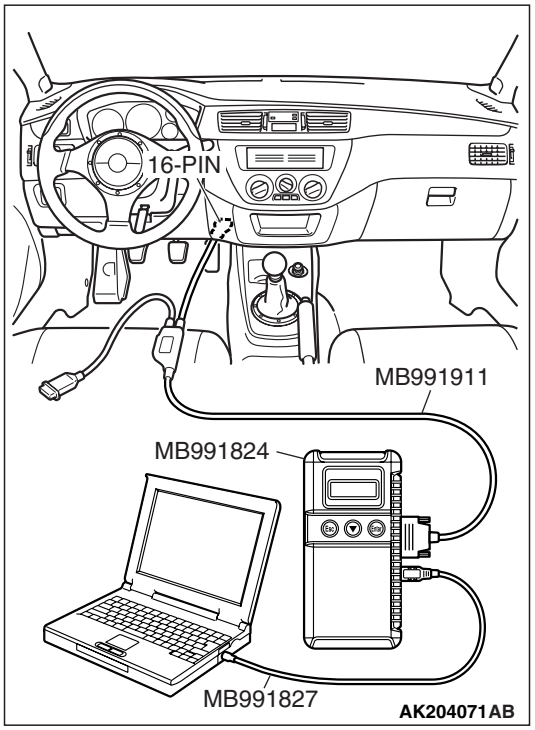

STEP 6. Using scan tool MB991958, check actuator test items 01, 02, 03, 04: Injector.

⚠ CAUTION

To prevent damage to scan tool MB991958, always turn the ignition switch to the "LOCK" (OFF) position before connecting or disconnecting scan tool MB991958.

(1) Connect scan tool MB991958 to the data link connector.

(2) Turn the ignition switch to the "ON" position.

(3) Check following items in the actuator test. Refer to GROUP 13A, Actuator Test Reference Table P.13A-837.

a. Items 01, 02, 03, 04: Injector.

(4) Turn the ignition switch to the "LOCK" (OFF) position.

Q: Is the actuator operating properly?

YES : Go to Step 7.

NO : Refer to GROUP 13A, DTC P0201, P0202, P0203, P0204 –Injector Circuit P.13A-323.

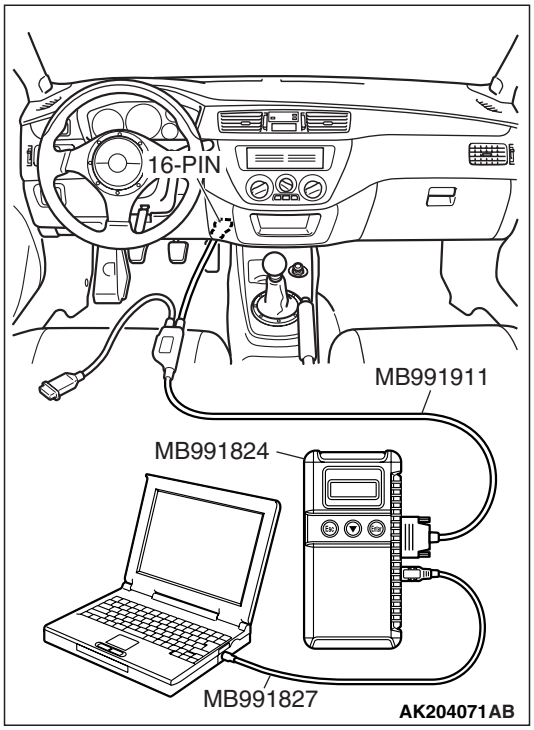

STEP 7. Using scan tool MB991958, check data list.

(1) Turn the ignition switch to the "ON" position.

(2) Check the following item in the data list. Refer to GROUP 13A, Data List Reference Table P.13A-823.

a. Item 21: Engine Coolant Temperature Sensor.

(3) Turn the ignition switch to the "LOCK" (OFF) position.

Q: Is the sensor operating properly?

YES : Go to Step 8.

NO : Repair or replace it. Then confirm that the malfunction symptom is eliminated.

STEP 8. Check the fuel pressure.

Refer to GROUP 13A, On-vehicle Service –Fuel Pressure Test P.13A-865.

Q: Is the fuel pressure normal?

YES : Go to Step 9.

NO : Repair or replace it. Then confirm that the malfunction symptom is eliminated.

STEP 9. Check the ignition timing.

Refer to GROUP 11A, On-vehicle Service –Ignition Timing Check P.11A-8.

Q: Is the ignition timing normal?

YES : Check the following items, and repair or replace the defective items.

a. Check the ignition coil, spark plugs, spark plug cables.

b. Check compression pressure.

c. Check the engine oil viscosity.

Then confirm that the malfunction symptom is eliminated.

NO : Check that the crankshaft position sensor and timing belt cover are in the correct position. Then confirm that the malfunction symptom is eliminated.

INSPECTION PROCEDURE 12: When The Engine is Hot, It Stalls at Idle (Die Out)

COMMENT

- In cases such as the above, the ignition system, air/fuel mixture, idle air control motor or compression pressure may be faulty. In addition, if the engine suddenly stalls, the cause may also be a loose connector.

TROUBLESHOOTING HINTS (The most likely causes for this case:)

- Malfunction of the ignition system.
- Malfunction of air/fuel ratio control system.
- Malfunction of the IAC system.
- Vacuum leak.
- Improper connector contact.

DIAGNOSIS

Required Special Tools:

- MB991958: Scan Tool (M.U.T.-III Sub Assembly)
  - MB991824: V.C.I.
  - MB991827: USB Cable
  - MB991911: Main Harness B

STEP 1. Check if the battery terminal is disconnected.

Q: Has the battery terminal been disconnected lately?

YES : Start the engine and let it run at idle for approximate 10 minutes after engine warm up. Then, if a malfunction occurs, go to step 2.

NO : Go to Step 2.

STEP 2. Using scan tool MB991958, read the diagnostic trouble code (DTC).

⚠ CAUTION

To prevent damage to scan tool MB991958, always turn the ignition switch to the "LOCK" (OFF) position before connecting or disconnecting scan tool MB991958.

(1) Connect scan tool MB991958 to the data link connector.
(2) Turn the ignition switch to the "ON" position.
(3) Read the DTC.
(4) Turn the ignition switch to the "LOCK" (OFF) position.

Q: Is DTC set?

YES : Refer to GROUP 13A, Diagnostic Trouble Code Chart P.13A-41.

NO : Go to Step 3.

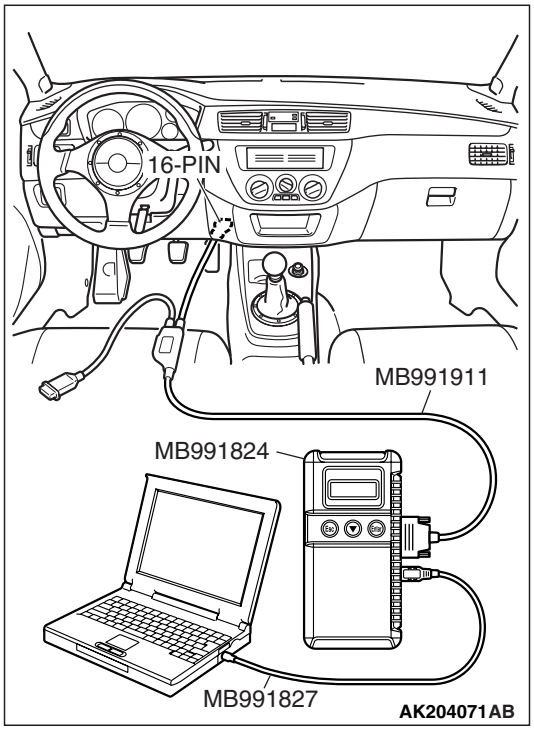

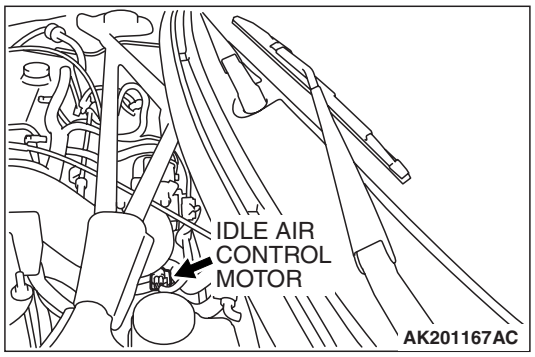

STEP 3. Check the idle air control (IAC) motor operation sound.

(1) Check that the engine coolant temperature is 20° C (68° F) or below.

NOTE: If necessary, you can disconnect the engine coolant temperature sensor connector and connect the harness side of the connector to another engine coolant temperature sensor that is at 20°C (68°F) or below.

(2) Check that the operation sound of the IAC motor can be heard after the ignition is switched to the "ON" position (but without starting the engine).
- An operation sound should be heard.

(3) Turn the ignition switch to the "LOCK" (OFF) position.

Q: Did you hear the operation sound?

YES : Go to Step 4

NO : Refer to GROUP 13A, DTC P0506 –Idle Control System RPM Lower Than Expected P.13A-584, DTC P0507 –Idle Control System RPM Higher Than Expected P.13A-595.

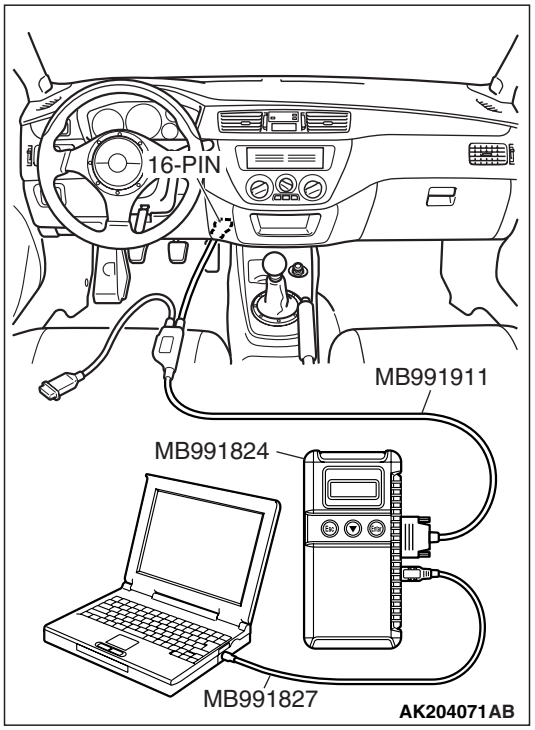

STEP 4. Using scan tool MB991958, check actuator test items 01, 02, 03, 04: Injector.

⚠ CAUTION

To prevent damage to scan tool MB991958, always turn the ignition switch to the "LOCK" (OFF) position before connecting or disconnecting scan tool MB991958.

(1) Connect scan tool MB991958 to the data link connector.

(2) Turn the ignition switch to the "ON" position.

(3) Check following items in the actuator test. Refer to GROUP 13A, Actuator Test Reference Table P.13A-837.

a. Items 01, 02, 03, 04: Injector.

(4) Turn the ignition switch to the "LOCK" (OFF) position.

Q: Is the actuator operating properly?

YES : Go to Step 5.

NO : Refer to GROUP 13A, DTC P0201, P0202, P0203, P0204 –Injector Circuit P.13A-323.

STEP 5. Check by operating the accelerator pedal.

Q: Does the engine stall right after the accelerator pedal is released?

YES : Refer to GROUP 13A, Clean the throttle valve area P.13A-862.

NO : Go to Step 6.

STEP 6. Engine stall reproduction test.

Q: Is it easy to reproduce the engine stall?

YES : Go to Step 7.

NO : Check if the following signals change suddenly by wiggling the circuit harness and connectors.

a. Crankshaft position sensor signal.
b. Volume airflow sensor signal.
c. Injector drive signal.
d. Primary and secondary ignition signal.
e. Fuel pump drive signal.
f. ECM power supply voltage.

Repair or replace it. Then confirm that the malfunction symptom is eliminated.

STEP 7. Using scan tool MB991958, check data list.

⚠ CAUTION

To prevent damage to scan tool MB991958, always turn the ignition switch to the "LOCK" (OFF) position before connecting or disconnecting scan tool MB991958.

(1) Connect scan tool MB991958 to the data link connector.
(2) Turn the ignition switch to the "ON" position.
(3) Check the following items in the data list. Refer to GROUP 13A, Data List Reference Table P.13A-823.
   a. Item 13: Intake Air Temperature Sensor.
   b. Item 25: Barometric Pressure Sensor.
   c. Item 21: Engine Coolant Temperature Sensor.
   d. Item 59: Heated Oxygen Sensor (rear).
   e. Item 11: Heated Oxygen Sensor (front).
   f. Item 27: Power Steering Pressure Switch.
   g. Item 28: A/C Switch.
(4) Turn the ignition switch to the "LOCK" (OFF) position.

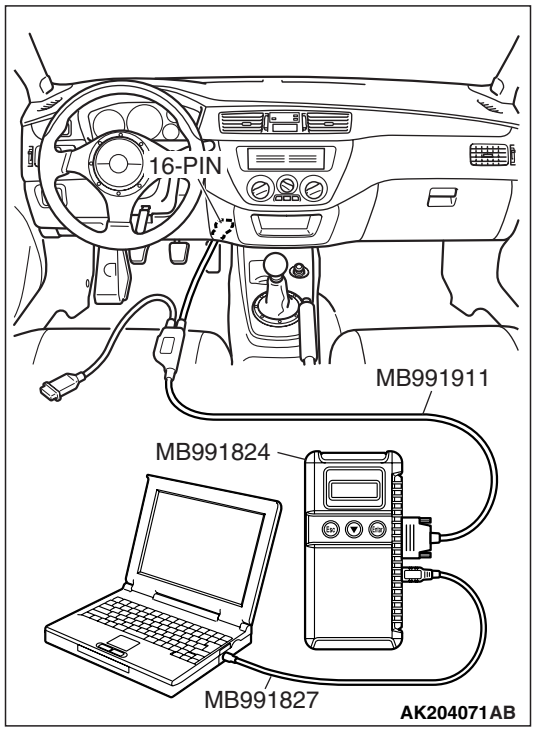

Q: Are they operating properly?

YES : Go to Step 8.

NO : Repair or replace it. Then confirm that the malfunction symptom is eliminated.

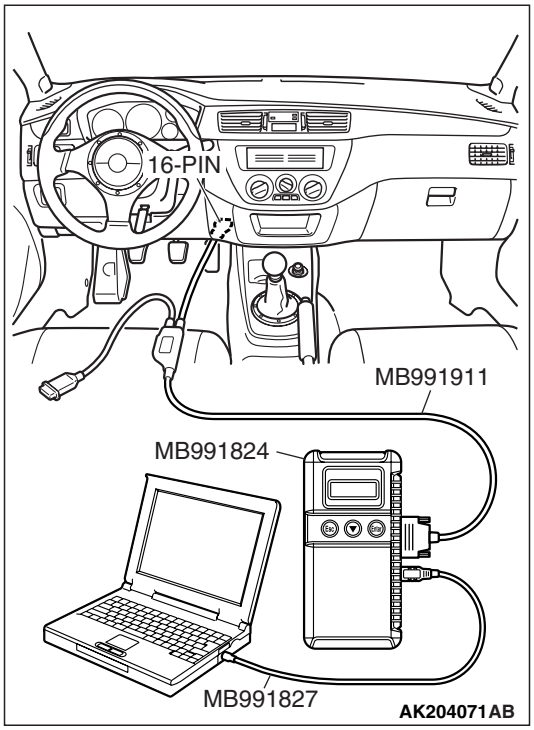

STEP 8. Using scan tool MB991958, check actuator test.

(1) Turn the ignition switch to the "ON" position.

(2) Check the following item in the actuator test. Refer to GROUP 13A, Actuator Test Reference Table P.13A-837.

a. Item 10: EGR Vacuum Regulator Solenoid Valve.

(3) Turn the ignition switch to the "LOCK" (OFF) position.

Q: Is the actuator operating properly?

YES : Go to Step 9.

NO : Repair or replace it. Then confirm that the malfunction symptom is eliminated.

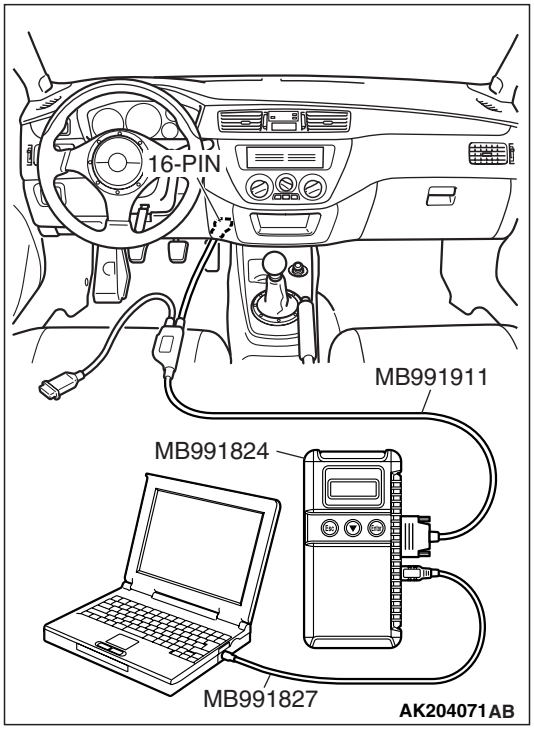

STEP 9. Using scan tool MB991958, check data list.

(1) Turn the ignition switch to the "ON" position.

(2) Check the following item of the data list. Refer to GROUP 13A, Data List Reference Table P.13A-823.

a. Item 11: Heated Oxygen Sensor (front).

- Fluctuates between 0 – 0.4 volt and 0.6 – 1.0 volt while idling after the engine has been warmed.

(3) Turn the ignition switch to the "LOCK" (OFF) position.

Q: Is the sensor operating properly?

YES : Go to Step 12.

NO : Go to Step 10.

STEP 10. Check the fuel pressure.
Refer to GROUP 13A, Fuel Pressure Test P.13A-865.

Q: Is the fuel pressure normal?

YES : Go to Step 11.
NO : Repair or replace it. Then confirm that the malfunction symptom is eliminated.

STEP 11. Using scan tool MB991958, check data list.

⚠ CAUTION
To prevent damage to scan tool MB991958, always turn the ignition switch to the "LOCK" (OFF) position before connecting or disconnecting scan tool MB991958.

(1) Connect scan tool MB991958 to the data link connector.
(2) Turn the ignition switch to the "ON" position.
(3) Check the following item in the data list. Refer to GROUP 13A, Data List Reference Table P.13A-823.
  a. Item 45: Idle Air Control Motor Position.
(4) Turn the ignition switch to the "LOCK" (OFF) position.

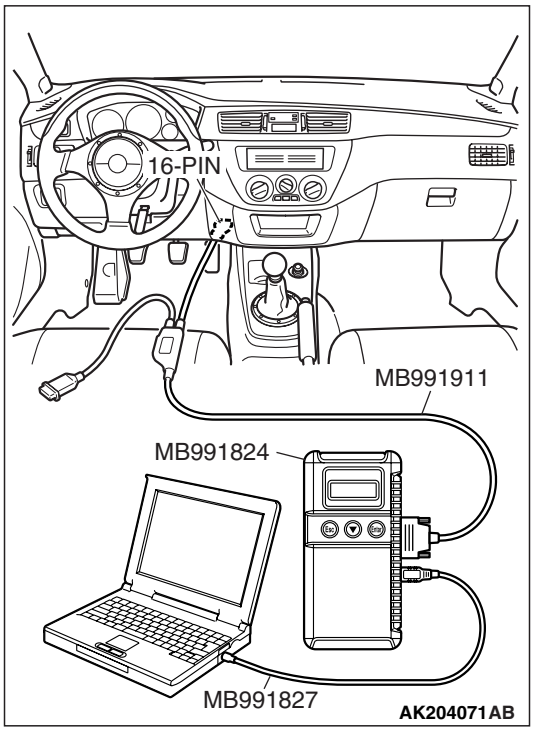

Q: Is the actuator operating properly?

YES : Check the following items, and repair or replace the defective items.
  a. Vacuum leak.
    - Broken intake manifold gasket.
    - Broken air intake hose.
    - Broken vacuum hose.
    - Positive crankcase ventilation valve does not operate.
  b. Injector clogged.

  Then confirm that the malfunction symptom is eliminated.
NO : Adjusting the basic idle speed. Refer to GROUP 13A, On-vehicle Service –Basic Idle Speed Adjustment P.13A-864.

STEP 12. Check the ignition timing.
Refer to GROUP 11A, On-vehicle Service –Ignition Timing Check P.11A-8.

Q: Is the ignition timing normal?

YES : Check the following items, and repair or replace the defective items.
  a. Check the ignition coil, spark plugs, spark plug cables.
  b. Check if the injectors are clogged.
  c. Check compression pressure.
  d. Check if the foreign materials (water, kerosene, etc.) got into fuel.

  Then confirm that the malfunction symptom is eliminated.
NO : Check that the crankshaft position sensor and timing cover are in the correct position. Then confirm that the malfunction symptom is eliminated.

INSPECTION PROCEDURE 13: The Engine Stalls When Accelerating (Pass Out)

COMMENT

- In case such as the above, the cause is probably misfiring due to a weak spark, or an inappropriate air/fuel mixture. When the accelerator pedal is depressed.

TROUBLESHOOTING HINTS (The most likely causes for this case:)

- Vacuum leak.
- Malfunction of the ignition system.

DIAGNOSIS

Required Special Tools:

- MB991958: Scan Tool (M.U.T.-III Sub Assembly)
  - MB991824: V.C.I.
  - MB991827: USB Cable
  - MB991911: Main Harness B

STEP 1. Using scan tool MB991958, read the diagnostic trouble code (DTC).

⚠ CAUTION

To prevent damage to scan tool MB991958, always turn the ignition switch to the "LOCK" (OFF) position before connecting or disconnecting scan tool MB991958.

(1) Connect scan tool MB991958 to the data link connector.
(2) Turn the ignition switch to the "ON" position.
(3) Read the DTC.
(4) Turn the ignition switch to the "LOCK" (OFF) position.

Q: Is DTC set?

YES : Refer to GROUP 13A, Diagnostic Trouble Code Chart P.13A-41.

NO : Go to Step 2.

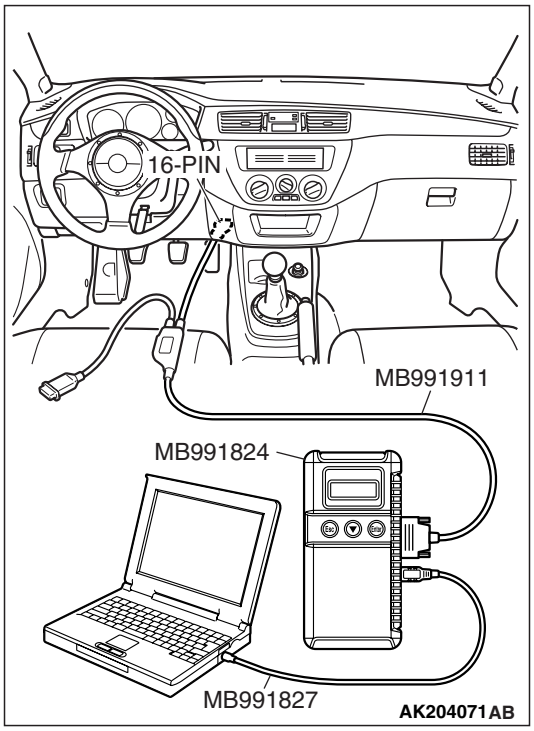

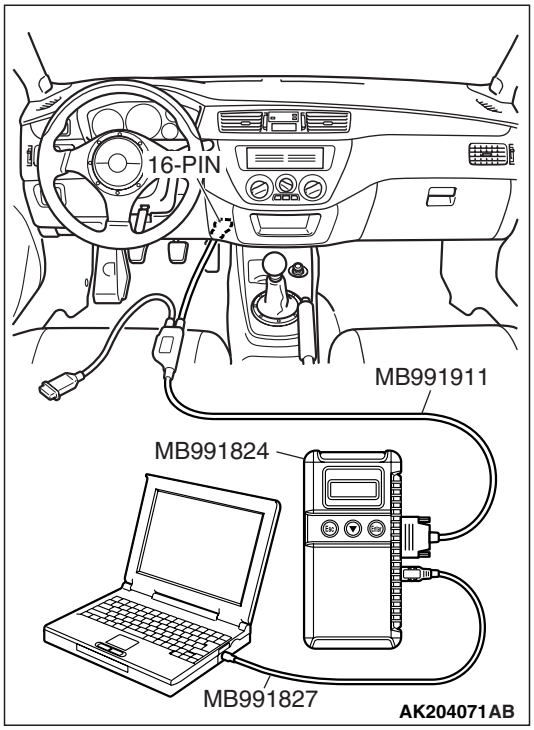

STEP 2. Using scan tool MB991958, check actuator test.

(1) Turn the ignition switch to the "ON" position.
(2) Check the following item in the actuator test. Refer to GROUP 13A, Actuator Test Reference Table P.13A-837.
  a. Item 10: EGR Vacuum Regulator Solenoid Valve.
(3) Turn the ignition switch to the "LOCK" (OFF) position.

Q: Is the actuator operating properly?

YES : Check the following items, and repair or replace the defective items.
  a. Check the ignition coil, spark plugs and spark plug cables.
  b. Check for vacuum leaks.
    - Broken intake manifold gasket.
    - Broken or disconnected vacuum hose.
    - Improper operation of the PCV valve.
    - Broken air intake hose.

  Then confirm that the malfunction symptom is eliminated.

NO : Repair or replace it. Then confirm that the malfunction symptom is eliminated.

INSPECTION PROCEDURE 14: The Engine Stalls When Decelerating

COMMENT

- The intake air volume may be insufficient due to a defective idle air control motor system.

TROUBLESHOOTING HINTS (The most likely causes for this case:)

- Malfunction of the IAC system.

DIAGNOSIS

Required Special Tools:

- MB991958: Scan Tool (M.U.T.-III Sub Assembly)
  - MB991824: V.C.I.
  - MB991827: USB Cable
  - MB991911: Main Harness B

STEP 1. Check if the battery terminal is disconnected.

Q: Has the battery terminal been disconnected lately?

YES : Start the engine and let it run at idle for approximate 10 minutes after engine warm up. Then if a malfunction occurs, go to step 2.

NO : Go to Step 2.

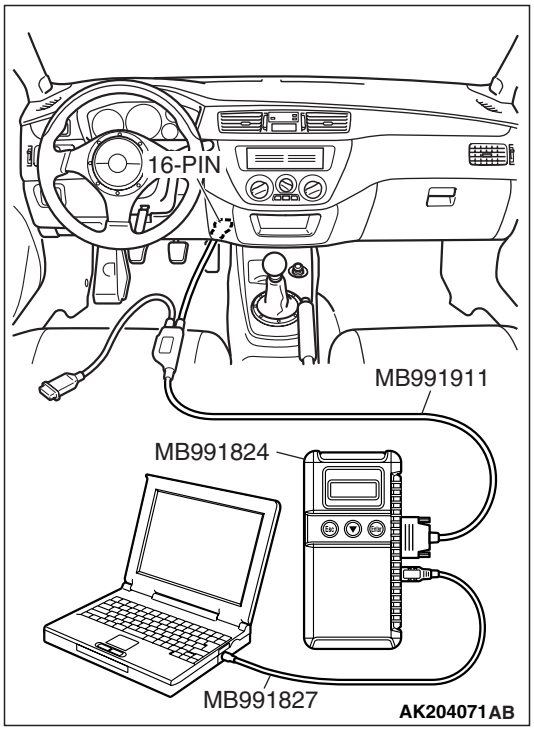

STEP 2. Using scan tool MB991958, read the diagnostic trouble code (DTC).

⚠ CAUTION

To prevent damage to scan tool MB991958, always turn the ignition switch to the "LOCK" (OFF) position before connecting or disconnecting scan tool MB991958.

(1) Connect scan tool MB991958 to the data link connector.
(2) Turn the ignition switch to the "ON" position.
(3) Read the DTC.
(4) Turn the ignition switch to the "LOCK" (OFF) position.

Q: Is the DTC is output?

YES : Refer to GROUP 13A, Diagnostic Trouble Code Chart P.13A-41.

NO : Go to Step 3.

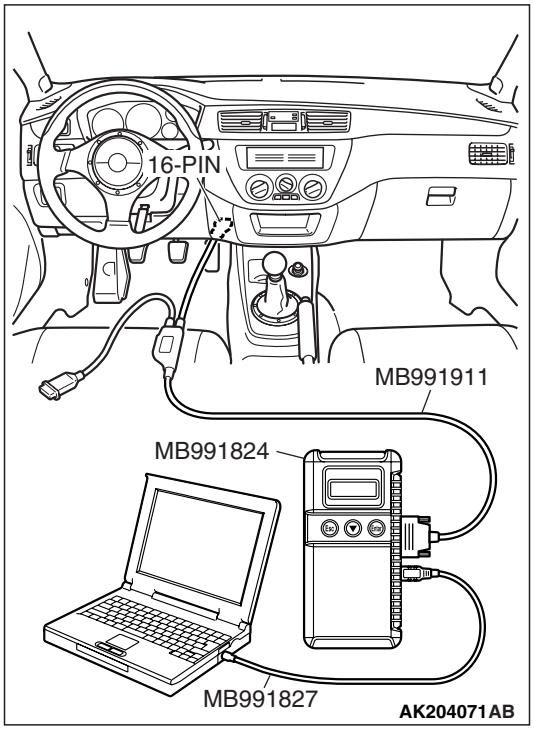

STEP 3. Using scan tool MB991958, check data list.

(1) Turn the ignition switch to the "ON" position.
(2) Check the following item in the data list. Refer to GROUP 13A, Data List Reference Table P.13A-823.
  a. Item 14: Throttle Position Sensor.
(3) Turn the ignition switch to the "LOCK" (OFF) position.

Q: Is the sensor operating properly?

YES : Go to Step 4.

NO : Repair or replace it. Then confirm that the malfunction symptom is eliminated.

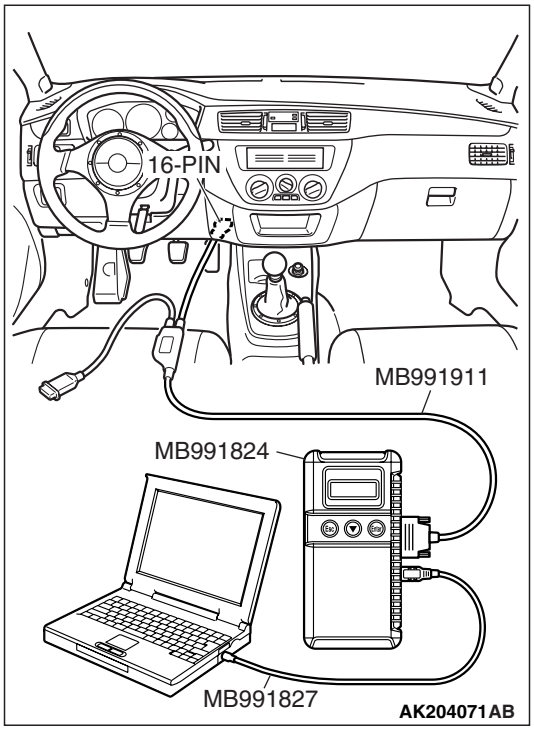

STEP 4. Using scan tool MB991958, check actuator test.

(1) Turn the ignition switch to the "ON" position.

(2) Check the following item in the actuator test. Refer to GROUP 13A, Actuator Test Reference Table P.13A-837.

a. Item 10: EGR Vacuum Regulator Solenoid Valve.

(3) Turn the ignition switch to the "LOCK" (OFF) position.

Q: Is the actuator operating properly?

YES : Go to Step 5.

NO : Repair or replace it. Then confirm that the malfunction symptom is eliminated.

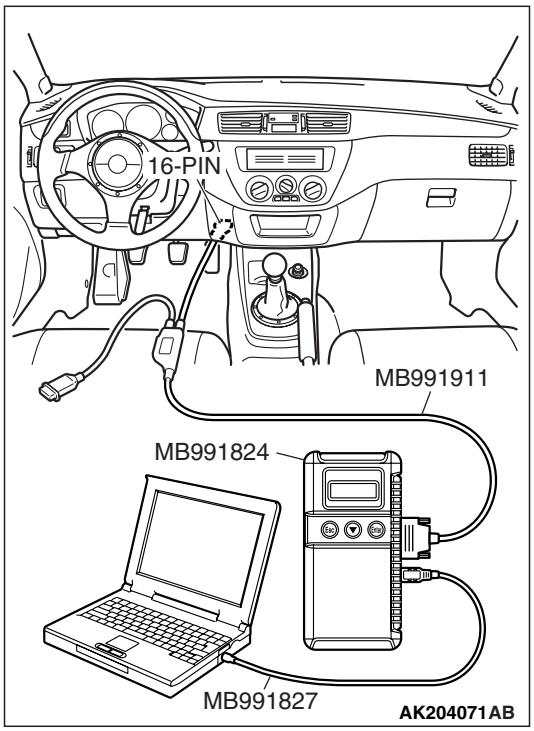

STEP 5. Using scan tool MB991958, check data list item 45: Idle Air Control Position.

(1) Start the engine and run at idle.

(2) Set scan tool MB991958 to the data reading mode for item 45, Idle Air Control Position.

a. The idle air control motor should drop to the 0 – 2 position during deceleration (from 1,000 r/min or more).

(3) Turn the ignition switch to the "LOCK" (OFF) position.

Q: Is the actuator operation properly?

YES : Check the following items, and repair, replace or clean the defective sections.

a. Check the ignition coil, spark plugs, spark plug cables.

b. Check the throttle valve area. (Refer to GROUP 13A, On-vehicle Service –Throttle Body Cleaning P.13A-862.)

Then confirm that the malfunction symptom is eliminated.

NO : Refer to, DTC P0500 –Vehicle Speed Sensor P.13A-572.

INSPECTION PROCEDURE 15: Hesitation, Sag or Stumble

COMMENT

- In cases such as the above, the ignition system, air/fuel mixture or compression pressure may be defective.

TROUBLESHOOTING HINTS (The most likely causes for this case:)

- Malfunction of the ignition system.
- Malfunction of air/fuel ratio control system.
- Malfunction of the fuel supply system.
- Malfunction of the EGR vacuum regulator solenoid valve system.
- Poor compression pressure.
- Malfunction of turbocharger system.

DIAGNOSIS

Required Special Tools:

- MB991958: Scan Tool (M.U.T.-III Sub Assembly)
  - MB991824: V.C.I.
  - MB991827: USB Cable
  - MB991911: Main Harness B

STEP 1. Using scan tool MB991958, read the diagnostic trouble code (DTC).

⚠ CAUTION

To prevent damage to scan tool MB991958, always turn the ignition switch to the "LOCK" (OFF) position before connecting or disconnecting scan tool MB991958.

(1) Connect scan tool MB991958 to the data link connector.
(2) Turn the ignition switch to the "ON" position.
(3) Read the DTC.
(4) Turn the ignition switch to the "LOCK" (OFF) position.

Q: Is DTC set?

YES : Refer to GROUP 13A, Diagnostic Trouble Code Chart P.13A-41.

NO : Go to Step 2.

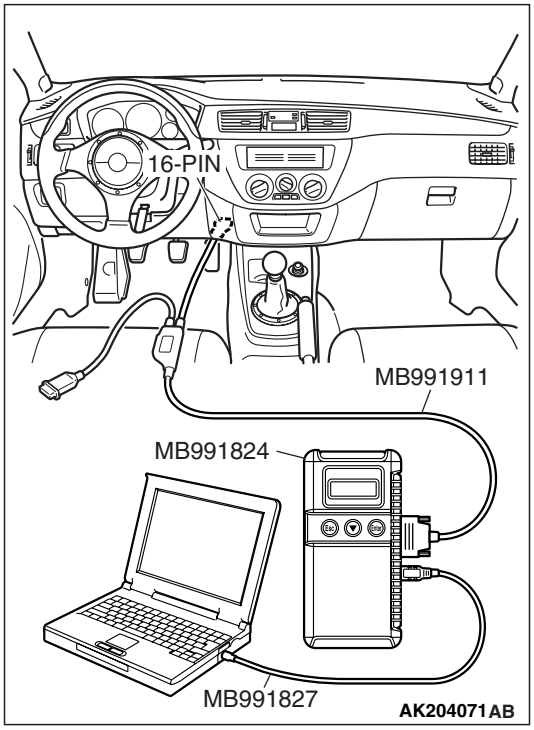

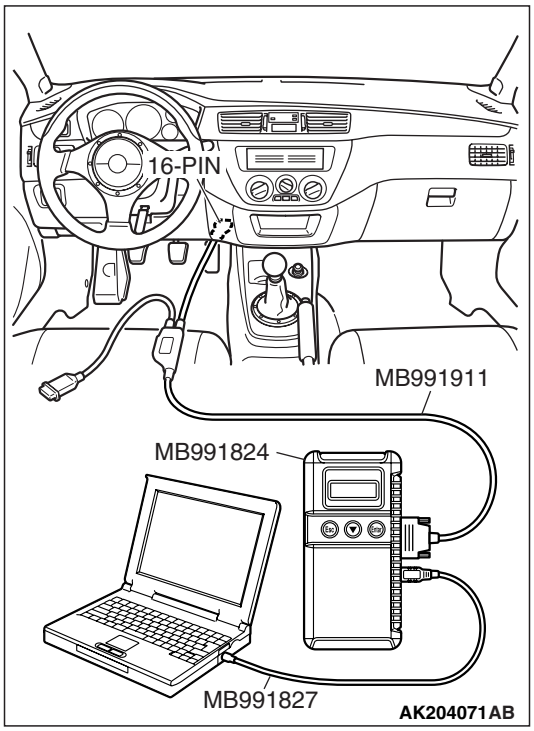

STEP 2. Using scan tool MB991958, check actuator test items 01, 02, 03, 04: Injector.

(1) Check following items in the actuator test. Refer to GROUP 13A, Actuator Test Reference Table P.13A-837.
   a. Items 01, 02, 03, 04: Injector.

(2) Turn the ignition switch to the "LOCK" (OFF) position.

Q: Are the actuators operating properly?

YES : Go to Step 3.

NO : Refer to GROUP 13A, DTC P0201, P0202, P0203, P0204 –Injector Circuit P.13A-323.

STEP 3. Check the ignition timing.

(1) Refer to GROUP 11A, On-vehicle Service –Ignition Timing Check P.11A-8.

Q: Is the ignition timing normal?

YES : Go to Step 4.

NO : Check that the crankshaft position sensor and timing belt cover are in the correct position. Then confirm that the malfunction symptom is eliminated.

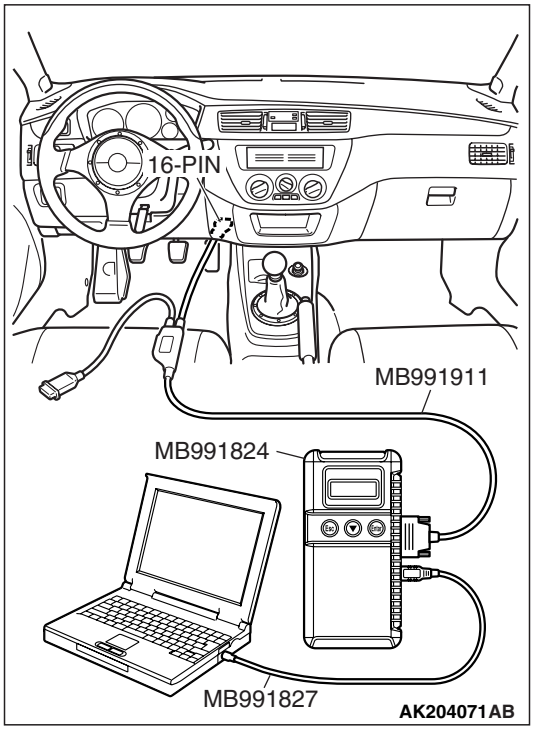

STEP 4. Using scan tool MB991958, check data list.

⚠ CAUTION

To prevent damage to scan tool MB991958, always turn the ignition switch to the "LOCK" (OFF) position before connecting or disconnecting scan tool MB991958.

(1) Connect scan tool MB991958 to the data link connector.
(2) Turn the ignition switch to the "ON" position.
(3) Check the following items in the data list. Refer to GROUP 13A, Data List Reference Table P.13A-823.
  a. Item 13: Intake Air Temperature Sensor.
  b. Item 25: Barometric pressure Sensor.
  c. Item 21: Engine Coolant Temperature Sensor.
  d. Item 14: Throttle Position Sensor.
  e. Item 59: Heated Oxygen Sensor (rear).
  f. Item 11: Heated Oxygen Sensor (front).
(4) Turn the ignition switch to the "LOCK" (OFF) position.

Q: Are they operating properly?

YES : Go to Step 5.
NO : Repair or replace it. Then confirm that the malfunction symptom is eliminated.

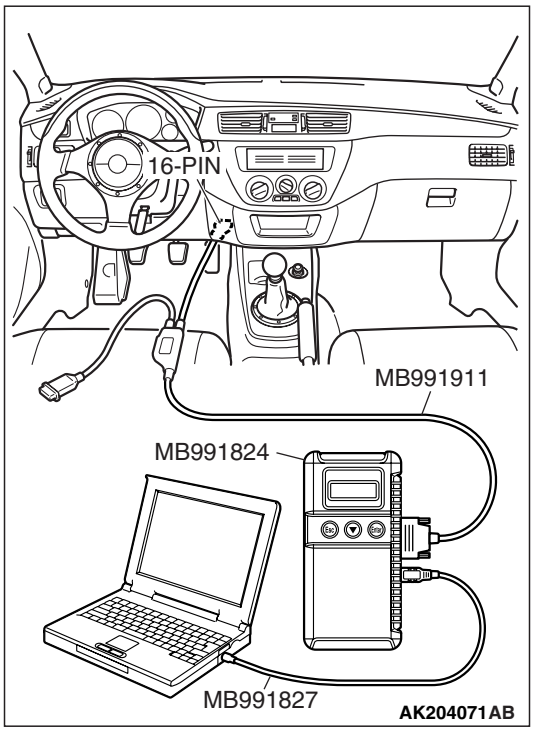

STEP 5. Using scan tool MB991958, check actuator test.

(1) Turn the ignition switch to the "ON" position.
(2) Check the following items in the actuator test. Refer to GROUP 13A, Actuator Test Reference Table P.13A-837.
  a. Item 10: EGR Vacuum Regulator Solenoid Valve.
  b. Item 09: Fuel pressure solenoid.
  c. Item 12: Turbocharger wastegate solenoid.
  d. Item 13: Fuel pump relay 3.
(3) Turn the ignition switch to the "LOCK" (OFF) position.

Q: Are they actuator operating properly?

YES : Go to Step 6.
NO : Repair or replace it. Then confirm that the malfunction symptom is eliminated.

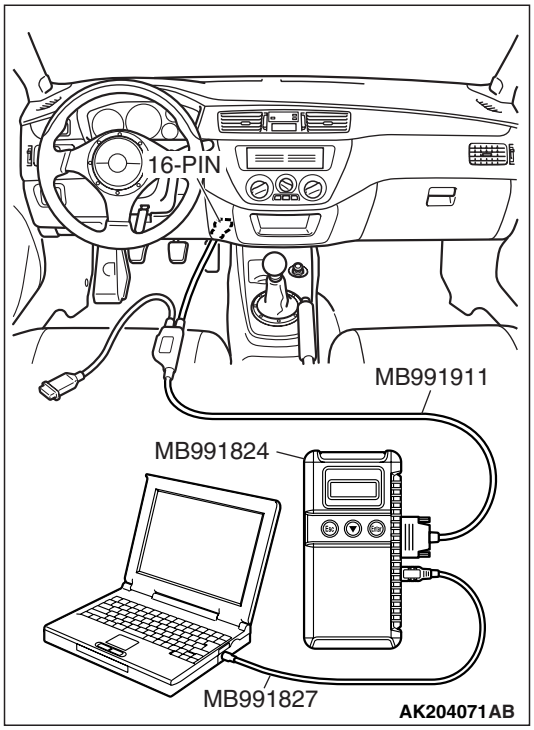

STEP 6. Using scan tool MB991958, check data list.

(1) Turn the ignition switch to the "ON" position.

(2) Check the following items of data list. Refer to GROUP 13A, Data List Reference Table P.13A-823.

a. Item 11: Heated Oxygen Sensor (front).

- Voltage should fluctuate between 0 – 0.4 volt and 0.6 – 1.0 volt while idling after the engine has warmed-up.

(3) Turn the ignition switch to the "LOCK" (OFF) position.

Q: Is the sensor operating properly?

YES : Go to Step 8.

NO : Go to Step 7.

STEP 7. Check the fuel pressure.

Refer to GROUP 13A, On-vehicle Service –Fuel Pressure Test P.13A-865.

Q: Is the fuel pressure normal?

YES : Check the following items, and repair or replace the defective items.

a. Vacuum leak.

- Broken intake manifold gasket.
- Broken air intake hose.
- Broken vacuum hose.
- Positive crankcase ventilation valve does not operate.

b. Injector clogged.

Then confirm that the malfunction symptom is eliminated.

NO : Repair or replace it. Then confirm that the malfunction symptom is eliminated.

STEP 8. Check the fuel pressure.
Refer to, Fuel Pressure Test P.13A-865.

Q: Is the fuel pressure normal?

YES : Check the following items, and repair or replace the defective items.

a. Check the ignition coil, spark plugs and spark plug cables.
b. Check supercharging pressure.
c. Check intake charge pressure control system.
d. Check rotating resistance of turbocharger turbine wheel. (Does the wheel rotate smoothly?)
e. Check the EGR system.
f. Check compression pressure.
g. Check the fuel filter or fuel line for clogging.

Then confirm that the malfunction symptom is eliminated.

NO : Repair or replace it. Then confirm that the malfunction symptom is eliminated.

INSPECTION PROCEDURE 16: Acceleration Shock

COMMENT

- There may be an ignition leak accompanying the increase in the spark plug demand voltage during acceleration.

TROUBLESHOOTING HINTS (The most likely causes for this case:)

- Malfunction of the ignition system.

DIAGNOSIS

Required Special Tools:

- MB991958: Scan Tool (M.U.T.-III Sub Assembly)
  - MB991824: V.C.I.
  - MB991827: USB Cable
  - MB991911: Main Harness B

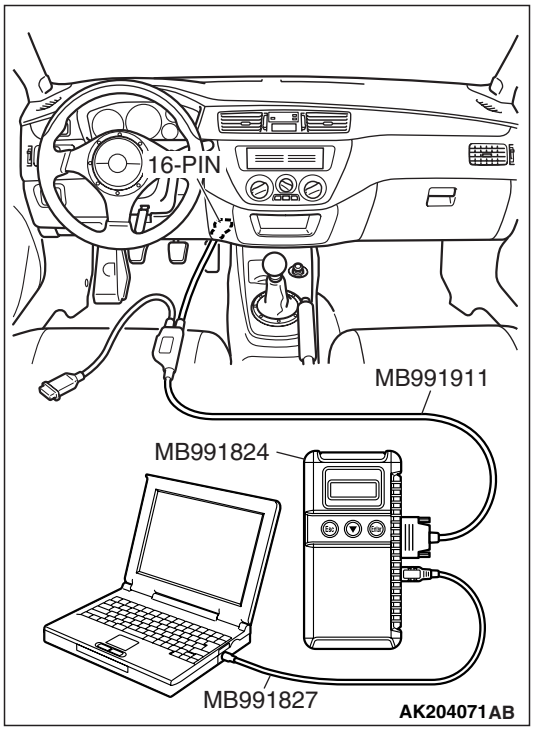

STEP 1. Using scan tool MB991958, read the diagnostic trouble code (DTC).

⚠ CAUTION

To prevent damage to scan tool MB991958, always turn the ignition switch to the "LOCK" (OFF) position before connecting or disconnecting scan tool MB991958.

(1) Connect scan tool MB991958 to the data link connector.
(2) Turn the ignition switch to the "ON" position.
(3) Read the DTC.
(4) Turn the ignition switch to the "LOCK" (OFF) position.

Q: Is DTC set?

YES : Refer to GROUP 13A, Diagnostic Trouble Code Chart P.13A-41.

NO : Check the following items, and repair or replace the defective items.

a. Check the ignition coil, spark plugs and spark plug cables.
b. Check for occurrence of ignition leak.

Then confirm that the malfunction symptom is eliminated.

INSPECTION PROCEDURE 17: Deceleration Shock

COMMENT

- There may be a sudden change in airflow through the IAC, causing the vehicle to decelerate rapidly for an instant.

TROUBLESHOOTING HINTS (The most likely causes for this case:)

- Malfunction of the IAC system.

DIAGNOSIS

Required Special Tools:

- MB991958: Scan Tool (M.U.T.-III Sub Assembly)
  - MB991824: V.C.I.
  - MB991827: USB Cable
  - MB991911: Main Harness B

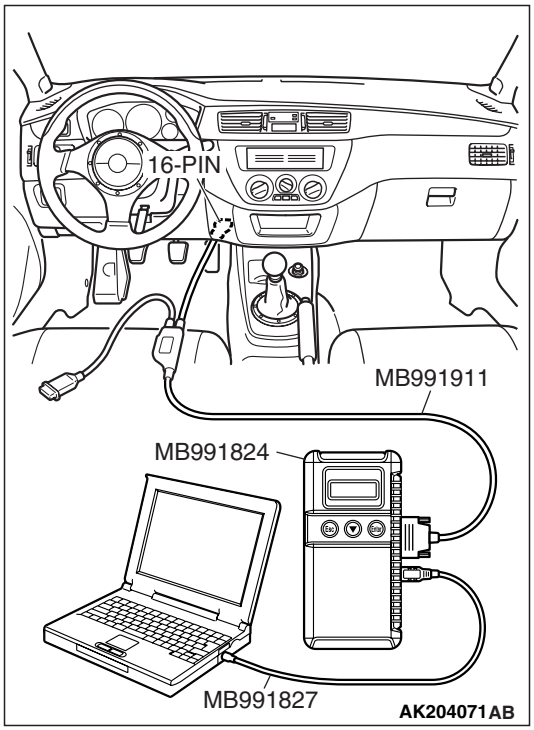

STEP 1. Using scan tool MB991958, read the diagnostic trouble code (DTC).

⚠ CAUTION

To prevent damage to scan tool MB991958, always turn the ignition switch to the "LOCK" (OFF) position before connecting or disconnecting scan tool MB991958.

(1) Connect scan tool MB991958 to the data link connector.
(2) Turn the ignition switch to the "ON" position.
(3) Read the DTC.
(4) Turn the ignition switch to the "LOCK" (OFF) position.

Q: Is DTC set?

YES : Refer to GROUP 13A, Diagnostic Trouble Code Chart P.13A-41.

NO : Go To Step 2.

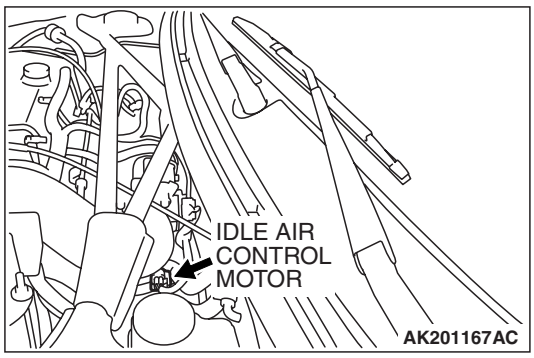

STEP 2. Check the idle air control (IAC) motor operation sound.

(1) Check that the engine coolant temperature is 20° C (68° F) or below.

NOTE: If necessary, you can disconnect the engine coolant temperature sensor connector and connect the harness side of the connector to another engine coolant temperature sensor that is at 20°C (68°F) or below.

(2) Check the operation sound of the IAC motor can be heard after the ignition is switched to the "ON" position (but without starting the engine).
- An operation sound should heard.

(3) Turn the ignition switch to the "LOCK" (OFF) position.

Q: Did you hear the operation sound?

YES : Go to Step 3.

NO : Refer to GROUP 13A, DTC P0506 –Idle Control System RPM Lower Than Expected P.13A-584, DTC P0507 –Idle Control System RPM Higher Than Expected P.13A-595.

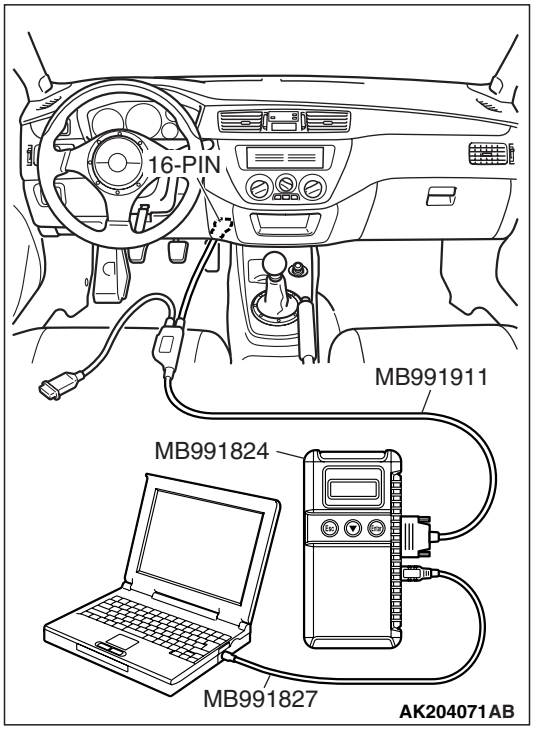

STEP 3. Using scan tool MB991958, check data list.

⚠ CAUTION

To prevent damage to scan tool MB991958, always turn the ignition switch to the "LOCK" (OFF) position before connecting or disconnecting scan tool MB991958.

(1) Connect scan tool MB991958 to the data link connector.
(2) Turn the ignition switch to the "ON" position.
(3) Check the following items in the data list. Refer to GROUP 13A, Data List Reference Table P.13A-823.
  a. Item 14: Throttle Position Sensor.
(4) Turn the ignition switch to the "LOCK" (OFF) position.

Q: Is the sensor operating properly?

YES : Refer to GROUP 13A, On-vehicle Service –Clean the throttle valve area P.13A-862.

NO : Repair or replace it. Then confirm that the malfunction symptom is eliminated.

INSPECTION PROCEDURE 18: Poor Acceleration

COMMENT

- Defective ignition system, abnormal air/fuel ratio, poor compression pressure, etc. are suspected.

TROUBLESHOOTING HINTS (The most likely causes for this case:)

- Malfunction of the ignition system.
- Malfunction of air/fuel ratio control system.
- Malfunction of the fuel supply system.
- Poor compression pressure.
- Clogged exhaust system.
- Malfunction of turbocharger system.

DIAGNOSIS

Required Special Tools:

- MB991958: Scan Tool (M.U.T.-III Sub Assembly)
  - MB991824: V.C.I.
  - MB991827: USB Cable
  - MB991911: Main Harness B

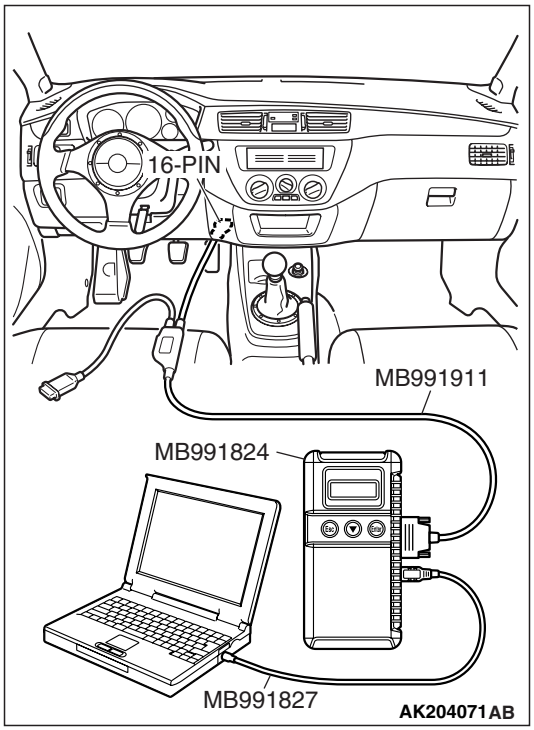

STEP 1. Using scan tool MB991958, read the diagnostic trouble code (DTC).

⚠ CAUTION

To prevent damage to scan tool MB991958, always turn the ignition switch to the "LOCK" (OFF) position before connecting or disconnecting scan tool MB991958.

(1) Connect scan tool MB991958 to the data link connector.
(2) Turn the ignition switch to the "ON" position.
(3) Read the DTC.
(4) Turn the ignition switch to the "LOCK" (OFF) position.

Q: Is DTC set?

YES : Refer to GROUP 13A, Diagnostic Trouble Code Chart P.13A-41.

NO : Go to Step 2.

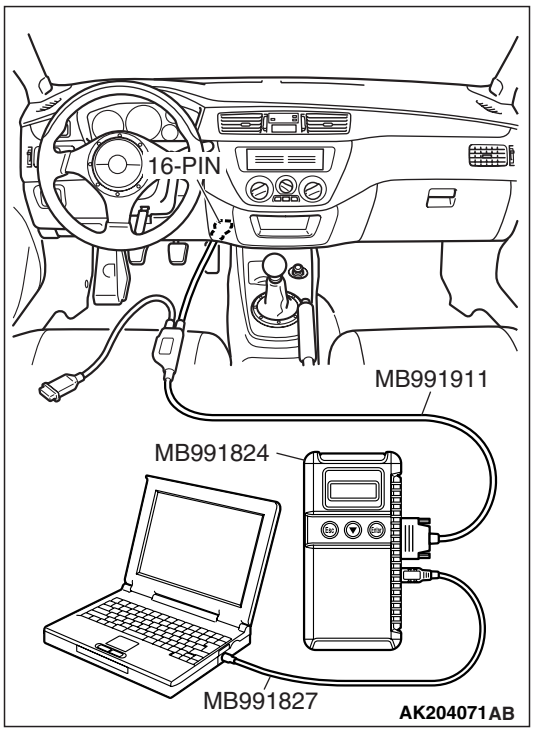

STEP 2. Using scan tool MB991958, check actuator test items 01, 02, 03, 04: Injector.

(1) Turn the ignition switch to the "ON" position.
(2) Check the following items in the actuator test. Refer to GROUP 13A, Actuator Test Table P.13A-837.
  a. Items 01, 02, 03, 04: Injector.
(3) Turn the ignition switch to the "LOCK" (OFF) position.

Q: Are the actuators operating properly?

YES : Go to Step 3.

NO : Refer to GROUP 13A, DTC P0201, P0202, P0203, P0204 –Injector Circuit P.13A-323.

STEP 3. Check the ignition timing.

Refer to GROUP 11A, On-vehicle Service –Ignition Timing Check P.11A-8.

Q: Is the ignition timing normal?

YES : Go to Step 4.

NO : Check that the crankshaft position sensor and timing belt cover are in the correct position. Then confirm that the malfunction symptom is eliminated.

STEP 4. Using scan tool MB991958, check data list.

⚠ CAUTION

To prevent damage to scan tool MB991958, always turn the ignition switch to the "LOCK" (OFF) position before connecting or disconnecting scan tool MB991958.

(1) Connect scan tool MB991958 to the data link connector.
(2) Turn the ignition switch to the "ON" position.
(3) Check the following items in the data list. Refer to GROUP 13A, Data List Reference Table P.13A-823.
  a. Item 13: Intake Air Temperature Sensor.
  b. Item 25: Barometric Pressure Sensor.
  c. Item 21: Engine Coolant Temperature Sensor.
  d. Item 14: Throttle Position Sensor.
  e. Item 59: Heated Oxygen Sensor (rear).
  f. Item 11: Heated Oxygen Sensor (front).
(4) Turn the ignition switch to the "LOCK" (OFF) position.

Q: Are they operating properly?

YES : Go to Step 5.

NO : Repair or replace it. Then confirm that the malfunction symptom is eliminated.

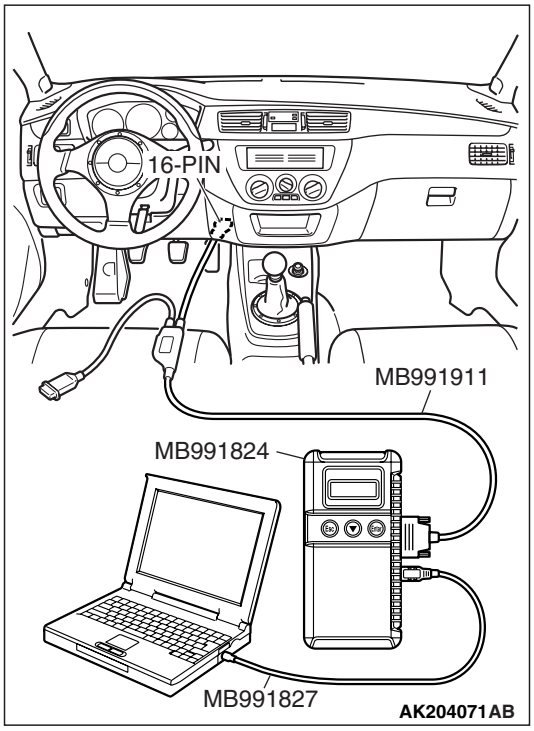

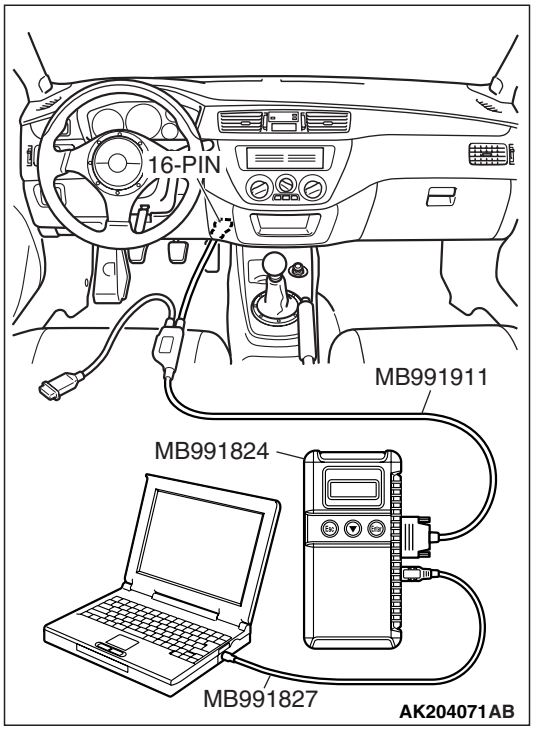

STEP 5. Using scan tool MB991958, check actuator test.

(1) Turn the ignition switch to the "ON" position.

(2) Check the following items in the actuator test. Refer to GROUP 13A, Actuator Test Reference Table P.13A-837.

a. Item 10: EGR Vacuum Regulator Solenoid Valve.

b. Item 09: Fuel pressure solenoid.

c. Item 12: Turbocharger wastegate solenoid.

d. Item 13: Fuel pump relay 3.

(3) Turn the ignition switch to the "LOCK" (OFF) position.

Q: Are the actuators operating properly?

YES : Go to Step 6.

NO : Repair or replace it. Then confirm that the malfunction symptom is eliminated.

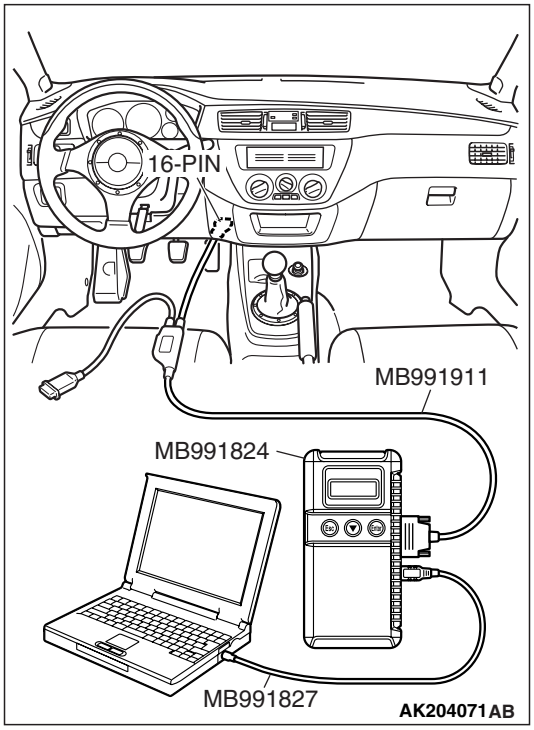

STEP 6. Using scan tool MB991958, check data list.

(1) Turn the ignition switch to the "ON" position.

(2) Check the following items of data list. Refer to GROUP 13A, Data List Reference Table P.13A-823.

a. Item 11: Heated Oxygen Sensor (front).

- Voltage should fluctuate between 0 – 0.4 volt and 0.6 – 1.0 volt while idling after the engine has been warmed.

(3) Turn the ignition switch to the "LOCK" (OFF) position.

Q: Is the sensor operating properly?

YES : Go to Step 8.

NO : Go to Step 7.

STEP 7. Check the fuel pressure.

Refer to GROUP 13A, On-vehicle Service –Fuel Pressure Test P.13A-865.

Q: Is the fuel pressure normal?

YES : Check the following items, and repair or replace the defective items.

a. Vacuum leak.
   - Broken intake manifold gasket.
   - Broken air intake hose.
   - Broken vacuum hose.
   - Positive crankcase ventilation valve does not operate.

b. Injector clogged.

Then confirm that the malfunction symptom is eliminated.

NO : Repair or replace it. Then confirm that the malfunction symptom is eliminated.

STEP 8. Check the fuel pressure.

Refer to GROUP 13A, On-vehicle Service –Fuel Pressure Test P.13A-865.

Q: Is the fuel pressure normal?

YES : Check the following items, and repair or replace the defective items.

a. Check the ignition coil, spark plugs and spark plug cables.
b. Check turbocharging pressure.
c. Check intake charge pressure control system.
d. Check rotating resistance of turbocharger turbine wheel. (Does the wheel rotate smoothly?)
e. Check compression pressure.
f. Check the fuel filter or fuel line for cogging.
g. Broken air intake hose.
h. Clogged air cleaner.
i. Clogged exhaust system.

Then confirm that the malfunction symptom is eliminated.

NO : Repair or replace it. Then confirm that the malfunction symptom is eliminated.

INSPECTION PROCEDURE 19: Surge

COMMENT

- Defective ignition system, abnormal air/fuel ratio, etc. are suspected.

TROUBLESHOOTING HINTS (The most likely causes for this case:)

- Malfunction of the ignition system.
- Malfunction of air/fuel ratio control system.
- Malfunction of the EGR vacuum regulator solenoid valve system.

DIAGNOSIS

Required Special Tools:

- MB991958: Scan Tool (M.U.T.-III Sub Assembly)
  - MB991824: V.C.I.
  - MB991827: USB Cable
  - MB991911: Main Harness B

STEP 1. Using scan tool MB991958, read the diagnostic trouble code (DTC).

⚠ CAUTION

To prevent damage to scan tool MB991958, always turn the ignition switch to the "LOCK" (OFF) position before connecting or disconnecting scan tool MB991958.

(1) Connect scan tool MB991958 to the data link connector.
(2) Turn the ignition switch to the "ON" position.
(3) Read the DTC.
(4) Turn the ignition switch to the "ON" position.

Q: Is DTC set?

YES : Refer to GROUP 13A, Diagnostic Trouble Code Chart P.13A-41.

NO : Go to Step 2.

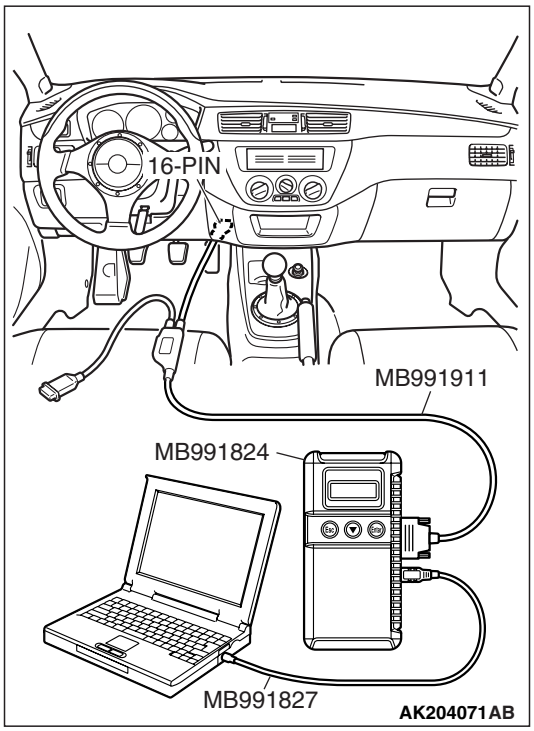

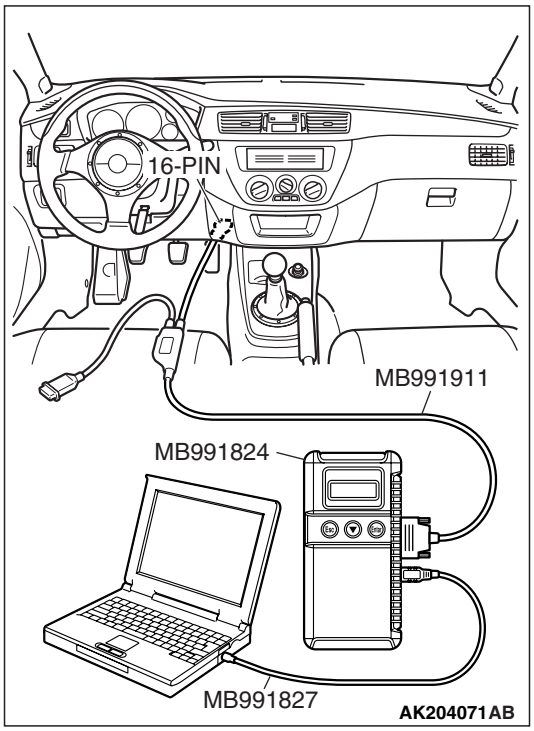

STEP 2. Using scan tool MB991958, check actuator test items 01, 02, 03, 04: Injector.

(1) Turn the ignition switch to the "ON" position.
(2) Check following items in the actuator test. Refer to GROUP 13A, Actuator Test Reference Table P.13A-837.
  a. Items 01, 02, 03, 04: Injector.
(3) Turn the ignition switch to the "ON" position.

Q: Are the actuators operating properly?

YES : Go to Step 3.
NO : Refer to GROUP 13A, DTC P0201, P0202, P0203, P0204 –Injector Circuit P.13A-323.

STEP 3. Check the ignition timing.

Refer to GROUP 11A, On-vehicle Service –Ignition Timing Check P.11A-8.

Q: Is the ignition timing normal?

YES : Go to Step 4.
NO : Check that the crankshaft position sensor and timing belt cover are in the correct position. Then confirm that the malfunction symptom is eliminated.

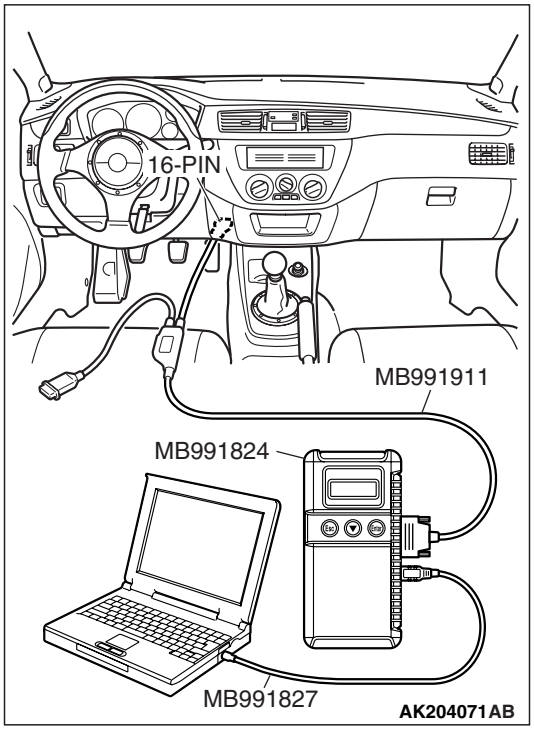

STEP 4. Using scan tool MB991958, check data list.

⚠ CAUTION

To prevent damage to scan tool MB991958, always turn the ignition switch to the "LOCK" (OFF) position before connecting or disconnecting scan tool MB991958.

(1) Connect scan tool MB991958 to the data link connector.
(2) Turn the ignition switch to the "ON" position.
(3) Check the following items in the data list. Refer to GROUP 13A, Data List Reference Table P.13A-823.
  a. Item 13: Intake Air Temperature Sensor.
  b. Item 25: Barometric pressure Sensor.
  c. Item 21: Engine Coolant Temperature Sensor.
  d. Item 14: Throttle Position Sensor.
  e. Item 59: Heated Oxygen Sensor (rear).
  f. Item 11: Heated Oxygen Sensor (front).
(4) Turn the ignition switch to the "LOCK" (OFF) position.

Q: Are they operating properly?

YES : Go to Step 5.
NO : Repair or replace it. Then confirm that the malfunction symptom is eliminated.

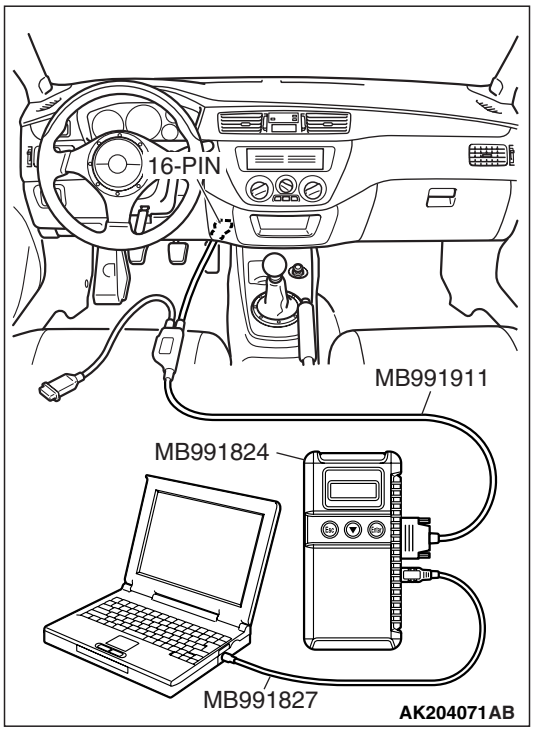

STEP 5. Using scan tool MB991958, check actuator test.

(1) Turn the ignition switch to the "ON" position.
(2) Check the following item in the actuator test. Refer to GROUP 13A, Actuator Test Reference Table P.13A-837.
  a. Item 10: EGR Vacuum Regulator Solenoid Valve.
(3) Turn the ignition switch to the "LOCK" (OFF) position.

Q: Is the actuator operating properly?

YES : Go to Step 6.
NO : Repair or replace it. Then confirm that the malfunction symptom is eliminated.

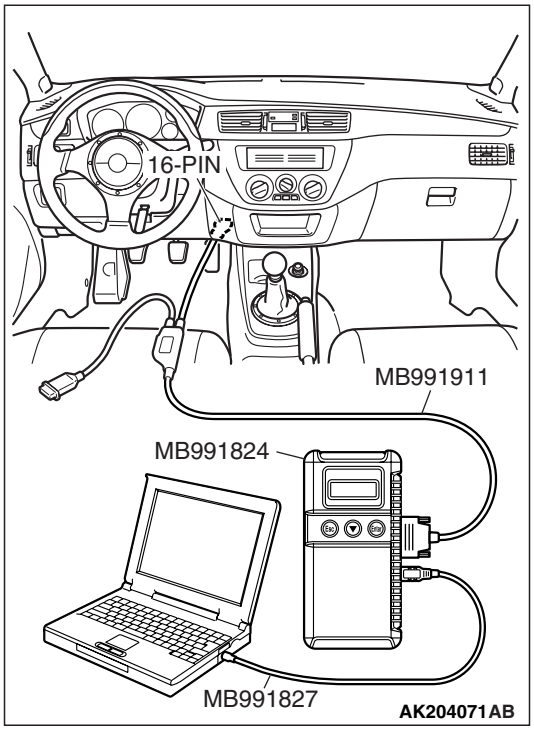

STEP 6. Using scan tool MB991958, check data list.

(1) Turn the ignition switch to the "ON" position.

(2) Check the following items of data list. Refer to GROUP 13A, Data List Reference Table P.13A-823.

a. Item 11: Heated Oxygen Sensor (front).

- Voltage should fluctuate between 0 –0.4 volt and 0.6 – 1.0 volt while idling after the engine has been warmed.

(3) Turn the ignition switch to the "LOCK" (OFF) position.

Q: Is the sensor operating properly?

YES : Go to Step 8.

NO : Go to Step 7.

STEP 7. Check the fuel pressure.

Refer to GROUP 13A, On-vehicle Service –Fuel Pressure Test P.13A-865.

Q: Is the fuel pressure normal?

YES : Check the following items, and repair or replace the defective items.

a. Vacuum leak.

- Broken intake manifold gasket.
- Broken air intake hose.
- Broken vacuum hose.
- Positive crankcase ventilation valve does not operate.

b. Injector clogged.

Then confirm that the malfunction symptom is eliminated.

NO : Repair or replace it. Then confirm that the malfunction symptom is eliminated.

STEP 8. Check the fuel pressure.

Refer to GROUP 13A, On-vehicle Service –Fuel Pressure Test P.13A-865.

Q: Is the fuel pressure normal?

YES : Check the following items, and repair or replace the defective items.

a. Check the ignition coil, spark plugs and spark plug cables.
b. Check the EGR system.
c. Check the turbocharger wastegate actuator.

Then confirm that the malfunction symptom is eliminated.

NO : Repair or replace it. Then confirm that the malfunction symptom is eliminated.

INSPECTION PROCEDURE 20: Knocking

COMMENT

- In cases such as the above, the cause is probably that the detonation control is defective or the heat value of the spark plug is inappropriate.

TROUBLESHOOTING HINTS (The most likely causes for this case:)

- Defective knock sensor.
- Incorrect heat value of the spark plug.

DIAGNOSIS

Required Special Tools:

- MB991958: Scan Tool (M.U.T.-III Sub Assembly)
  - MB991824: V.C.I.
  - MB991827: USB Cable
  - MB991911: Main Harness B

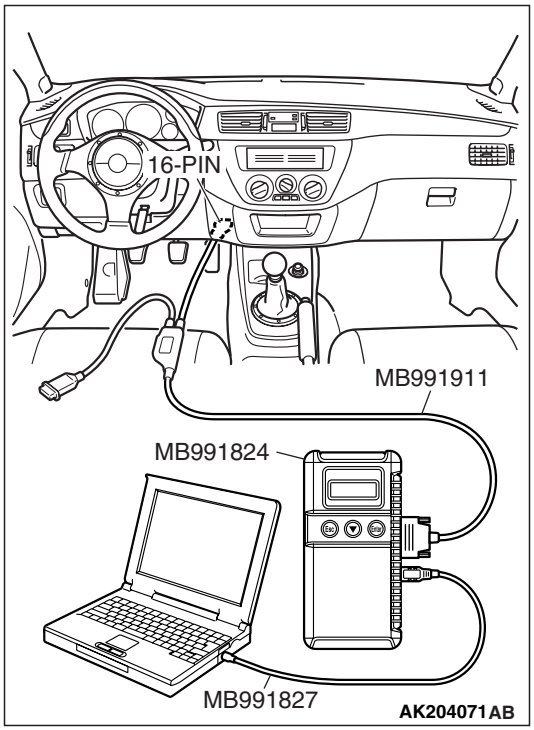

STEP 1. Using the scan tool MB991958, read the diagnostic trouble code (DTC).

⚠ CAUTION

To prevent damage to scan tool MB991958, always turn the ignition switch to the "LOCK" (OFF) position before connecting or disconnecting scan tool MB991958.

(1) Connect scan tool MB991958 to the data link connector.
(2) Turn the ignition switch to the "ON" position.
(3) Read the DTC.
(4) Turn the ignition switch to the "LOCK" (OFF) position.

Q: Is DTC set?

YES : Refer to, Diagnostic Trouble Code Chart P.13A-41.
NO : Go to Step 2.

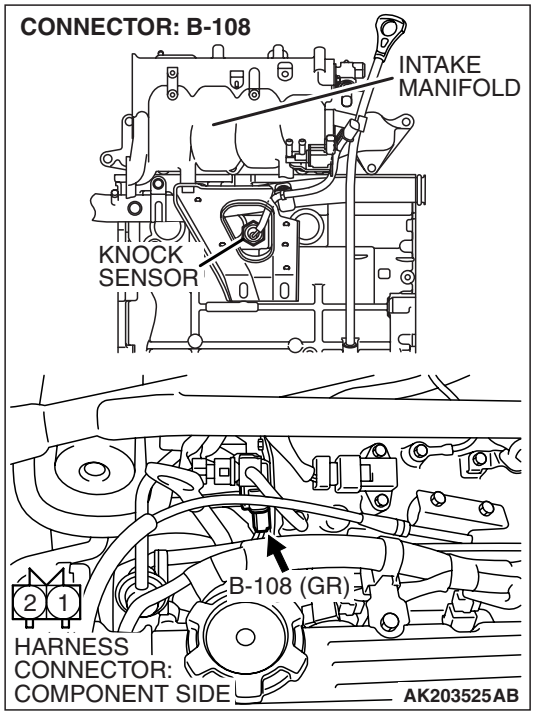

STEP 2. Check the ignition timing.

(1) The ignition timing should retard more when knock sensor connector B-108 is disconnected than when it is connected.

Q: When the knock sensor connector B-108 was disconnected, was the ignition timing delayed?

YES : Check the following items, and repair or replace the defective items.
a. Check the spark plugs.
b. Fuel quality, octane level.
c. Check if the foreign materials (water, kerosene, etc.) got into fuel.

Then confirm that the malfunction symptom is eliminated.

NO : Refer to, DTC P0325 –Knock Sensor Circuit P.13A-355.

INSPECTION PROCEDURE 21: Dieseling (Run-On)

COMMENT

- Fuel leakage from injectors is suspected, or carbon build up.

TROUBLESHOOTING HINTS (The most likely causes for this case:)

- Fuel leakage from injectors.

DIAGNOSIS

STEP 1. Check the injectors for fuel leakage.
Replace the leaking injector. Then confirm that the malfunction symptom is eliminated.

INSPECTION PROCEDURE 22: Too High CO and HC Concentration When Idling

COMMENT

- Abnormal air/fuel ratio is suspected.

TROUBLESHOOTING HINTS (The most likely causes for this case:)

- Malfunction of air/fuel ratio control system.
- Deteriorated catalyst.

DIAGNOSIS

Required Special Tools:

- MB991958: Scan Tool (M.U.T.-III Sub Assembly)
  - MB991824: V.C.I.
  - MB991827: USB Cable
  - MB991911: Main Harness B

STEP 1. Using scan tool MB991958, read the diagnostic trouble code (DTC).

⚠ CAUTION
To prevent damage to scan tool MB991958, always turn the ignition switch to the "LOCK" (OFF) position before connecting or disconnecting scan tool MB991958.

(1) Connect scan tool MB991958 to the data link connector.
(2) Turn the ignition switch to the "ON" position.
(3) Read the DTC.
(4) Turn the ignition switch to the "LOCK" (OFF) position.

Q: Is DTC set?

YES : Refer to GROUP 13A, Diagnostic Trouble Code Chart P.13A-41.
NO : Go to Step 2.

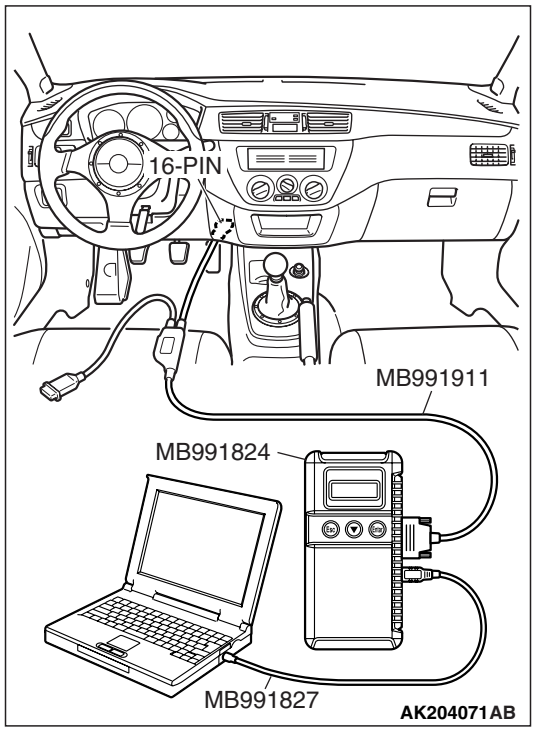

STEP 2. Check the ignition timing.

Refer to GROUP 11A, On-vehicle Service –Ignition Timing Check P.11A-8.

Q: Is the ignition timing normal?

YES : Go to Step 3.

NO : Check that the crankshaft position sensor and timing belt cover are in the correct position. Then confirm that the malfunction symptom is eliminated.

STEP 3. Using scan tool MB991958, check data list.

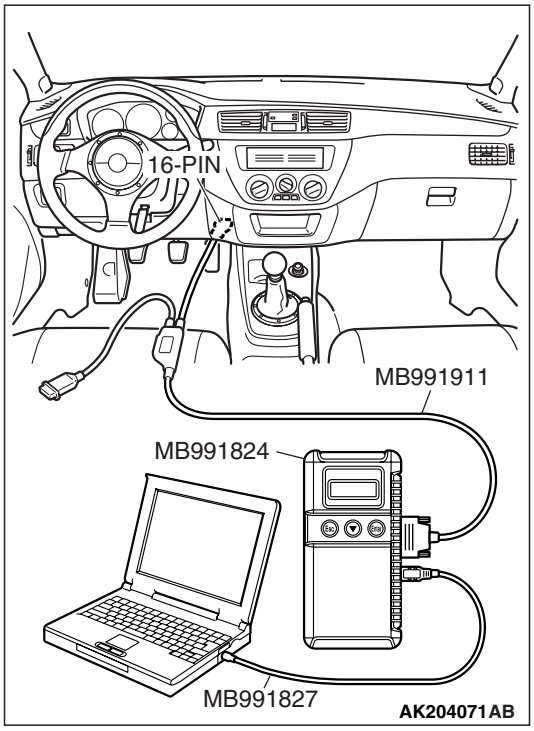

⚠ CAUTION

To prevent damage to scan tool MB991958, always turn the ignition switch to the "LOCK" (OFF) position before connecting or disconnecting scan tool MB991958.

(1) Connect scan tool MB991958 to the data link connector.
(2) Turn the ignition switch to the "ON" position.
(3) Check the following items in the data list. Refer to GROUP 13A, Data List Reference Table P.13A-823.
  a. Item 21: Engine Coolant Temperature Sensor.
  b. Item 13: Intake Air Temperature Sensor.
  c. Item 25: Barometric pressure Sensor.
  d. Item 59: Heated Oxygen Sensor (rear).
  e. Item 11: Heated Oxygen Sensor (front).
(4) Turn the ignition switch to the "LOCK" (OFF) position.

Q: Are they operating properly?

YES : Go to Step 4.

NO : Repair or replace it. Then confirm that the malfunction symptom is eliminated.

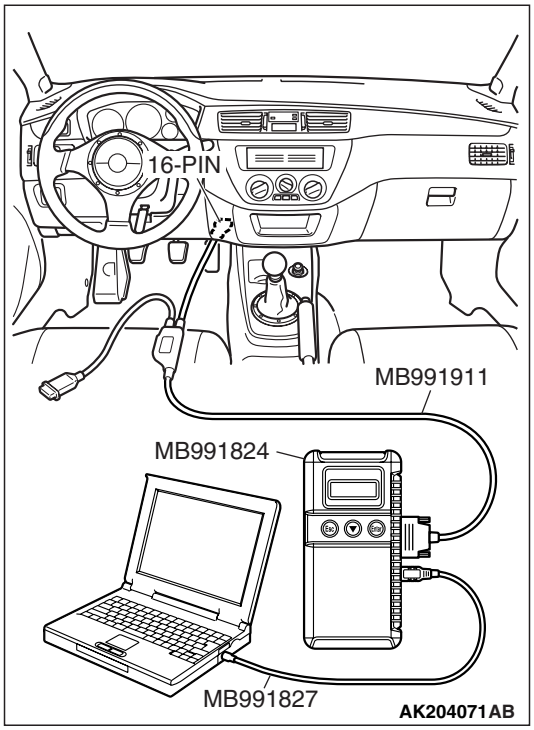

STEP 4. Using scan tool MB991958, check data list.

(1) Turn the ignition switch to the "ON" position.

(2) Check the following items of the data list. Refer to GROUP 13A, Data List Reference Table P.13A-823.

a. Item 11: Heated Oxygen Sensor (front).

- Voltage should fluctuate between 0 –0.4 volt and 0.6 – 1.0 volt while idling after the engine has been warmed.

(3) Turn the ignition switch to the "LOCK" (OFF) position.

Q: Is the sensor operating properly?

YES : Replace the heated oxygen sensor (front). Then confirm that the malfunction symptom is eliminated. If not resolved, go to step 6.

NO : Go to Step 5.

STEP 5. Check the fuel pressure.

Refer to GROUP 13A, On-vehicle Service –Fuel Pressure Test P.13A-865.

Q: Is the fuel pressure normal?

YES : Go to Step 6.

NO : Repair or replace it. Then confirm that the malfunction symptom is eliminated.

STEP 6. Check the following items.

(1) Check the following items, and repair or replace the defective items.

a. Check the injectors for fuel leakage.

b. Check the ignition coil, spark plugs and spark plug cables.

c. Check compression pressure.

d. Check the positive crank case ventilation system.

e. Check the evaporative emission system.

f. Check the EGR system.

(2) Then check the malfunction symptom.

Q: Is the malfunction symptom eliminated.

YES : The check is completed.

NO : Replace the catalytic converter. Then confirm that the malfunction symptom is eliminated.

INSPECTION PROCEDURE 23: Transient, Mass Emission Tailpipe Test Failure

COMMENT

- The test is failed when the air/fuel ratio is not controlled to the ideal air/fuel ratio. This occurs due to the feedback control by heated oxygen sensor signals, insufficient EGR flow rate, or deteriorated catalyst.

NOTE: If the three-way catalyst temperature is low when checking the exhaust gas, the three-way catalyst cannot sufficiently clean the emissions. Warm up the engine sufficiently before checking the exhaust, and check immediately.

TROUBLESHOOTING HINTS (The most likely causes for this case:)

- Malfunction of air/fuel ratio control system.
- Malfunction of the EGR system.
- Deteriorated catalyst.

DIAGNOSIS

Required Special Tools:

- MB991958: Scan Tool (M.U.T.-III Sub Assembly)
  - MB991824: V.C.I.
  - MB991827: USB Cable
  - MB991911: Main Harness B

STEP 1. Check the exhaust gas with the engine at normal operating temperature.

Q: After enough warm up, was the exhaust gas checked enough?

YES : Go to Step 2.
NO : Check it again after enough warm up.

STEP 2. Check the following items.

(1) Check the following items.
  a. Check all vacuum hoses and connectors.
  b. Check electrical wires and connectors for obvious problems.
  c. Check the exhaust system for missing or damaged parts.

Q: Are they normal?

YES : Go to Step 3.
NO : Repair or replace it. Then confirm that the malfunction symptom is eliminated.

STEP 3. Check the drive ability.

(1) Check if the malfunction symptom described on the symptom chart is occurring.

Q: Is the drive-ability normal?

YES : Go to Step 4.
NO : Refer to GROUP 13A, Trouble Symptom Chart P.13A-44.

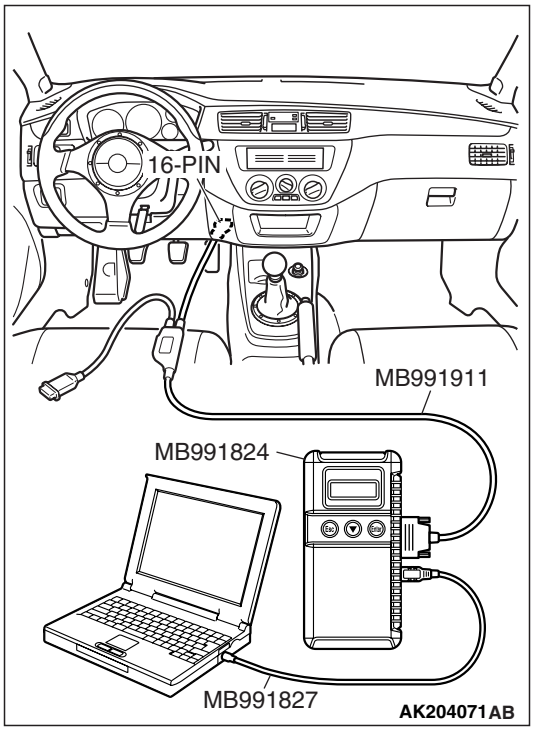

STEP 4. Using scan tool MB991958, read the diagnostic trouble code (DTC).

⚠ CAUTION

To prevent damage to scan tool MB991958, always turn the ignition switch to the "LOCK" (OFF) position before connecting or disconnecting scan tool MB991958.

(1) Connect scan tool MB991958 to the data link connector.
(2) Turn the ignition switch to the "ON" position.
(3) Read the DTC.
(4) Turn the ignition switch to the "LOCK" (OFF) position.

Q: Is DTC set?

YES : Refer to GROUP 13A, Diagnostic Trouble Code Chart P.13A-41.

NO : Go to Step 5.

STEP 5. Check the ignition timing.

Refer to GROUP 11A, On-vehicle Service –Ignition Timing Check P.11A-8.

Q: Is the ignition timing normal?

YES : Go to Step 6.

NO : Check that the crankshaft position sensor and timing belt cover are in the correct position. Then confirm that the malfunction symptom is eliminated.

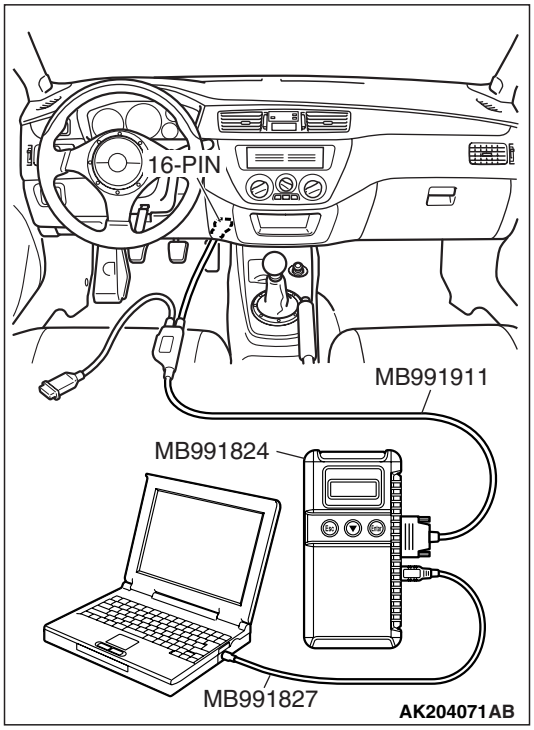

STEP 6. Using scan tool MB991958, check data list.

⚠ CAUTION

To prevent damage to scan tool MB991958, always turn the ignition switch to the "LOCK" (OFF) position before connecting or disconnecting scan tool MB991958.

(1) Connect scan tool MB991958 to the data link connector.
(2) Turn the ignition switch to the "ON" position.
(3) Check the following items in the data list. Refer to GROUP 13A, Data List Reference Table P.13A-823.
  a. Item 21: Engine Coolant Temperature Sensor.
  b. Item 13: Intake Air Temperature Sensor.
  c. Item 25: Barometric pressure Sensor.
  d. Item 59: Heated Oxygen Sensor (rear).
(4) Turn the ignition switch to the "LOCK" (OFF) position.

Q: Is the sensor operating properly?

YES : Go to Step 7.

NO : Repair or replace it. Then confirm that the malfunction symptom is eliminated.

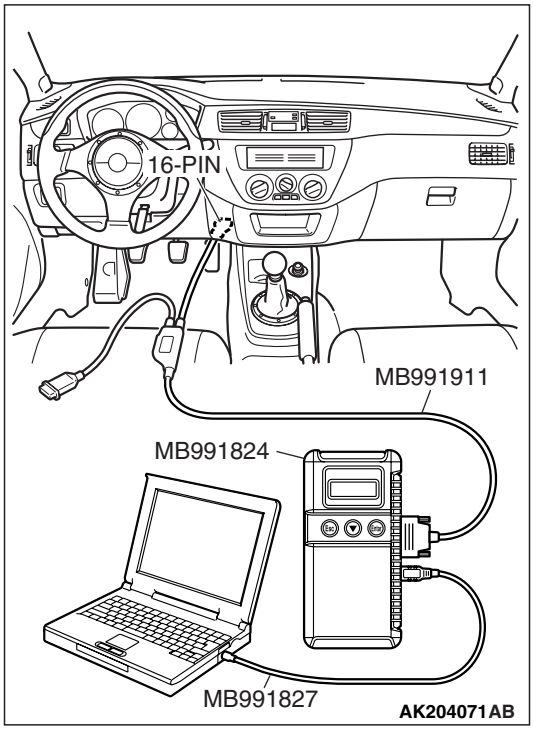

STEP 7. Using scan tool MB991958, check data list item 11: heated oxygen sensor (front).

(1) Start the engine and run at idle.
(2) Set scan tool MB991958 to the data reading mode for item 11, Heated Oxygen Sensor (front).
  - Warm up the engine. When the engine is decelerated suddenly from 4,000 r/min, the output voltage should increase from 200 mV or less to 600 –1,000 mV in a few seconds.
(3) Turn the ignition switch to the "LOCK" (OFF) position.

Q: Is the sensor operating properly?

YES : Go to Step 8.

NO : Refer to GROUP 13A, DTC P0130 –Heated Oxygen Sensor Circuit (sensor 1) P.13A-216, DTC P0131 – Heated Oxygen Sensor Low Voltage (sensor 1) P.13A-231, DTC P0132 –Heated Oxygen Sensor Circuit High Voltage (sensor 1) P.13A-238, DTC P0133 –Heated Oxygen Sensor Circuit Slow Response (sensor 1) P.13A-243, DTC P0134 – Heated Oxygen Sensor Circuit No Activity Detected (sensor 1) P.13A-249.

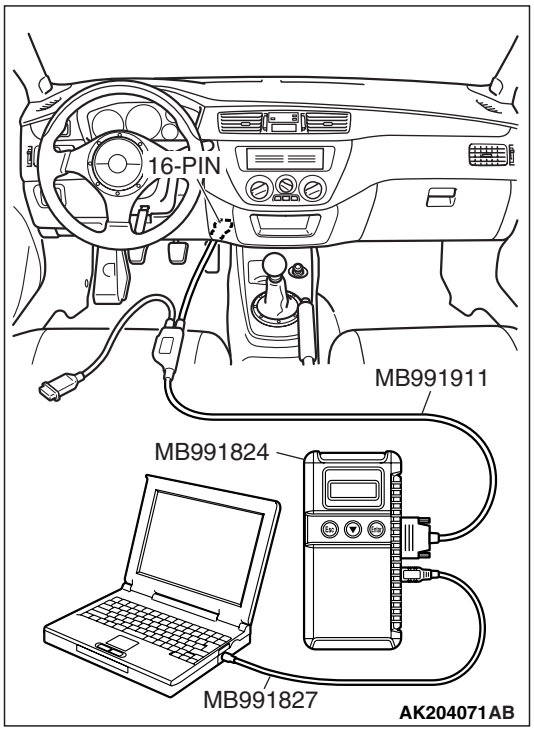

STEP 8. Using scan tool MB991958, check data list item 11: Heated oxygen sensor (front).

(1) Start the engine and run at idle.
(2) Set scan tool MB991958 to the data reading mode for item 11, Heated Oxygen Sensor (front).
- Voltage should fluctuate between 0 – 0.4 volt and 0.6 – 1.0 volt while after the engine has been warmed.

(3) Turn the ignition switch to the "LOCK" (OFF) position.

Q: Is the sensor operating properly?

YES : Go to Step 9.
NO : Go to Step 11.

STEP 9. Check the EGR system.

Refer to GROUP 17, Emission Control System –EGR System Check P.17-17.

Q: Is the EGR system normal?

YES : Go to Step 10.
NO : Repair or replace it. Then confirm that the malfunction symptom is eliminated.

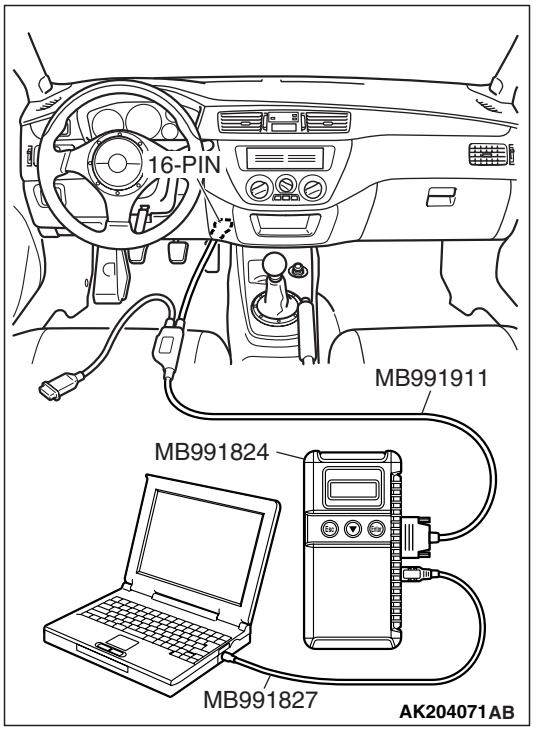

STEP 10. Using scan tool MB991958, check data list item 59: Heated oxygen sensor (rear).

⚠ CAUTION

To prevent damage to scan tool MB991958, always turn the ignition switch to the "LOCK" (OFF) position before connecting or disconnecting scan tool MB991958.

(1) Connect scan tool MB991958 to the data link connector.
(2) Start the engine and run at idle.
(3) Set scan tool MB991958 to the data reading mode for item 59, Heated Oxygen Sensor (rear).
- Average voltage should measure 0.6 volts or less, when idling.

(4) Turn the ignition switch to the "LOCK" (OFF) position.

Q: Is the sensor operating properly?

YES : Go to Step 12.
NO : Replace the heated oxygen sensor (front). Then confirm that the malfunction symptom is eliminated.

STEP 11. Check the fuel pressure.

Refer to GROUP 13A, On-vehicle Service –Fuel Pressure Test P.13A-865.

Q: Is the fuel pressure normal?

YES : Go to Step 12.
NO : Repair or replace it. Then confirm that the malfunction symptom is eliminated.

STEP 12. Check the following items.

(1) Check the following items, and repair or replace the defective items.
  a. Check the injectors for fuel leakage.
  b. Check the ignition coil, spark plugs and spark plug cables.
  c. Check compression pressure.
  d. Check the positive crankcase ventilation system.
  e. Check the evaporative emission system.
(2) Then check the malfunction symptom.

Q: Is the malfunction symptom is eliminated?

YES : The check is completed.
NO : Replace the catalytic converter. Then confirm that the malfunction symptom is eliminated.

INSPECTION PROCEDURE 24: Purge Flow Test of The Evaporative Emission Canister Failure

COMMENT

- The test fails when the purge line or purge port is clogged or if the evaporative emission purge solenoid fails.

TROUBLESHOOTING HINTS (The most likely causes for this case:)

- Purge line or purge port is clogged.
- Malfunction of the evaporative emission purge solenoid.
- Evaporative emission canister is clogged.

DIAGNOSIS

Required Special Tools:

- MB991958: Scan Tool (M.U.T.-III Sub Assembly)
  - MB991824: V.C.I.
  - MB991827: USB Cable
  - MB991911: Main Harness B

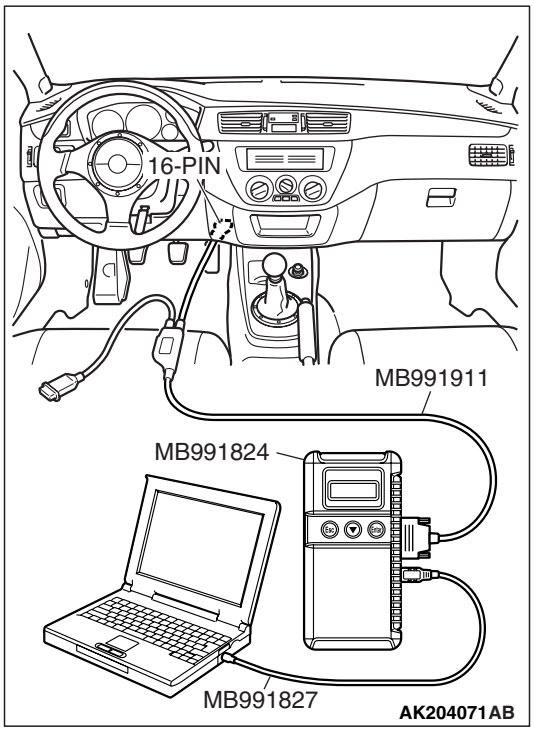

STEP 1. Using scan tool MB991958, read the diagnostic trouble code (DTC).

⚠ CAUTION

To prevent damage to scan tool MB991958, always turn the ignition switch to the "LOCK" (OFF) position before connecting or disconnecting scan tool MB991958.

(1) Connect scan tool MB991958 to the data link connector.
(2) Turn the ignition switch to the "ON" position.
(3) Read the DTC.
(4) Turn the ignition switch to the "LOCK" (OFF) position.

Q: Is DTC set?

YES : Refer to GROUP 13A, Diagnostic Trouble Code Chart P.13A-41.

NO : Refer to GROUP 17, Emission Control System – Purge Control System Check (Purge Flow Check) P.17-13.

INSPECTION PROCEDURE 25: Pressure Test of the Evaporative System Failure

COMMENT

- The test fails if there is a leak from the fuel tank or vapor line.

TROUBLESHOOTING HINTS (The most likely causes for this case:)

- Loose fuel tank filler tube cap.
- Broken seal in fuel tank, vapor line evaporative emission canister.

DIAGNOSIS

STEP 1. Check the evaporative emission purge solenoid
Refer to GROUP 17, Emission Control System –Evaporative Emission Purge Solenoid Check P.17-14.

Q: Is the evaporative emission purge solenoid normal?

YES : Go to Step 2.
NO : Repair or replace. Then confirm that the malfunction symptom is eliminated.

STEP 2. Check the evaporative emission ventilation solenoid.
Refer to GROUP 17, Emission Control System –Evaporative Emission Ventilation Solenoid Check P.17-15.

Q: Is the evaporative emission ventilation solenoid normal?

YES : Check the following items, and repair or replace the defective items.
a. Check for leaks from the vapor line or evaporative emission canister.
b. Check for leaks from the fuel tank.
Then confirm that the malfunction symptom is eliminated.
NO : Repair or replace. Then confirm that the malfunction symptom is eliminated.

INSPECTION PROCEDURE 26: Generator Output Voltage is Low (Approximately 12.3 Volts)

Generator Circuit

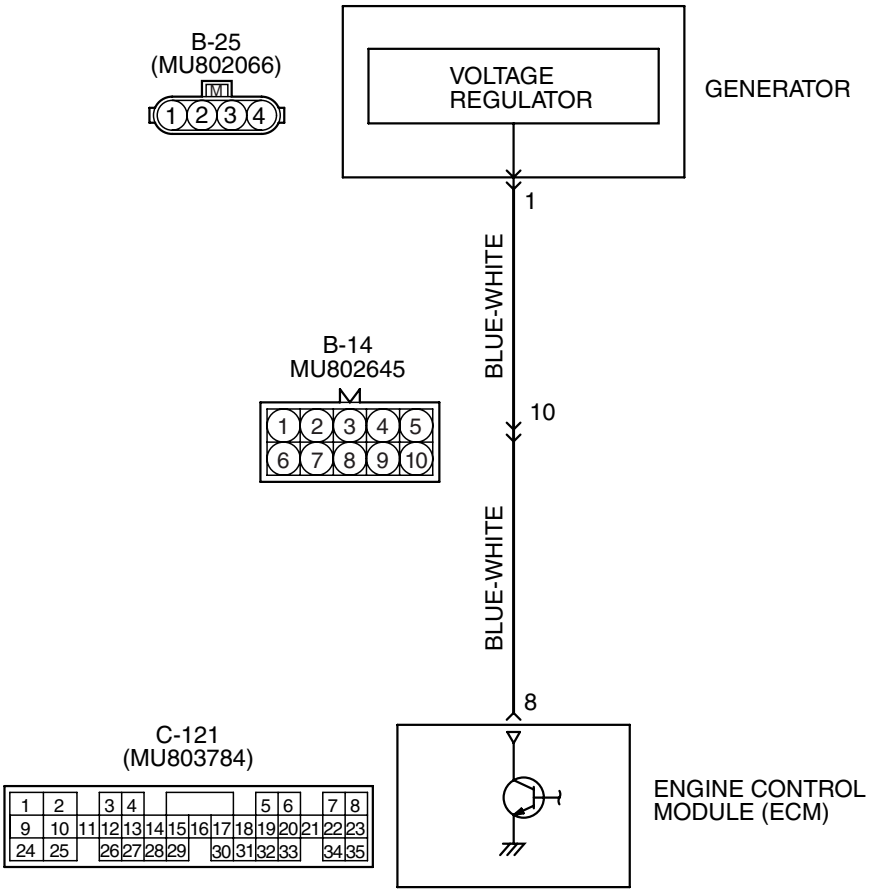

AK502091

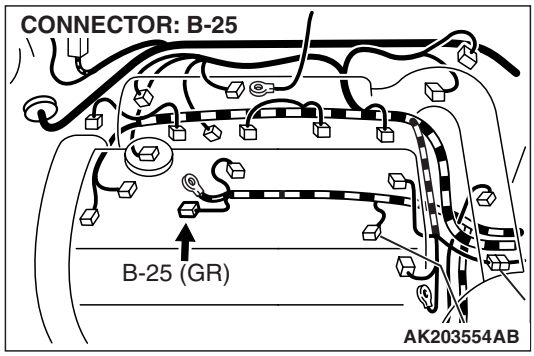

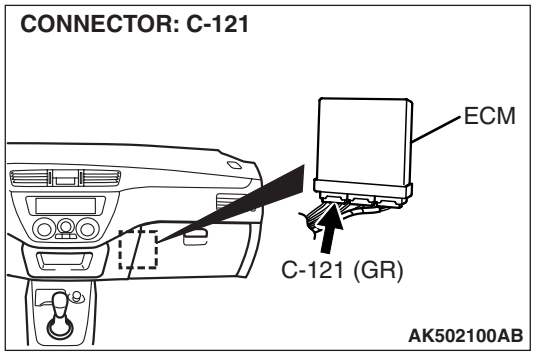

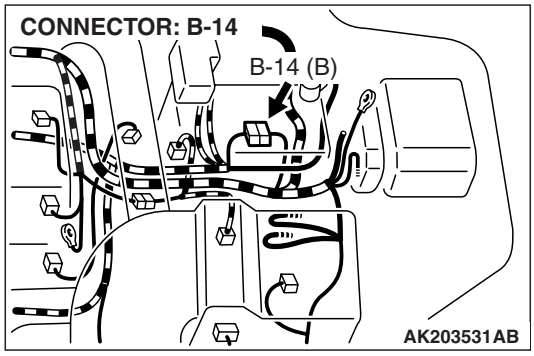

CIRCUIT OPERATION

- The ECM controls generator output current by duty-controlling continuity between the generator G terminal (terminal 1) and ground.

TROUBLESHOOTING HINTS (The most likely causes for this charging system:)

- Malfunction of the charging system.
- Short circuit in the harness between generator G terminal and ECM.
- ECM failed.

DIAGNOSIS

STEP 1. Measure the voltage at generator intermediate connector B-14 by backprobing.

(1) Do not disconnect the connector B-14.
(2) Start the engine and run at idle.

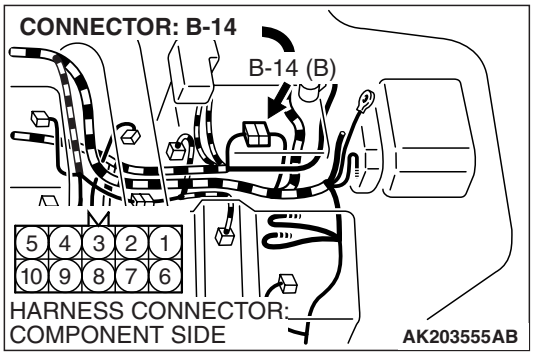

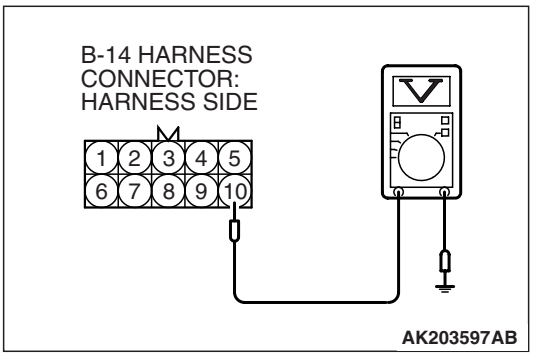

(3) Measure the voltage between terminal No. 10 and ground by backprobing.
  a. Engine: warming up
  b. Radiator fan: stopped
  c. Headlight switch: OFF to ON
  d. Rear defogger switch: OFF to ON
  e. Stoplight switch: OFF to ON
  - Voltage rises by 0.2 – 3.5 volts.

(4) Turn the ignition switch to the "LOCK" (OFF) position.

Q: Is the measured voltage between 0.2 and 3.5 volts?

YES : Replace the generator. Then confirm that the malfunction symptom is eliminated.
NO : Go to Step 2.

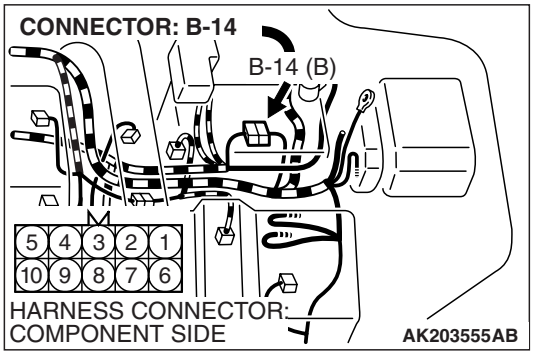

STEP 2. Check connector B-14 at generator intermediate connector for damage.

Q: Is the connector in good condition?

YES : Go to Step 3.

NO : Repair or replace it. Refer to GROUP 00E, Harness Connector Inspection P.00E-2. Then confirm that the malfunction symptom is eliminated.

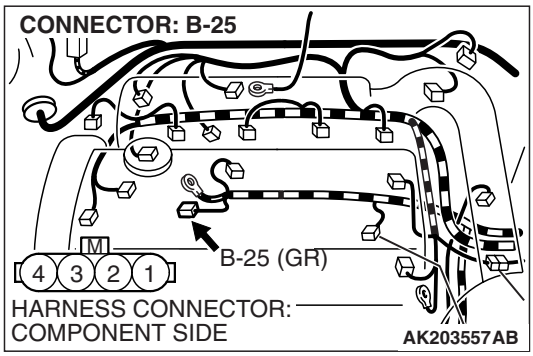

STEP 3. Check connector B-25 at generator connector for damage.

Q: Is the connector in good condition?

YES : Go to Step 4

NO : Repair or replace it. Refer to GROUP 00E, Harness Connector Inspection P.00E-2. Then confirm that the malfunction symptom is eliminated.

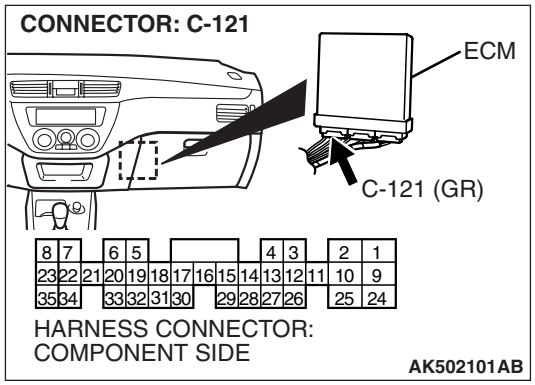

STEP 4. Check connector C-121 at ECM for damage.

Q: Is the connector in good condition?

YES : Go to Step 5.

NO : Repair or replace it. Refer to GROUP 00E, Harness Connector Inspection P.00E-2. Then confirm that the malfunction symptom is eliminated.

STEP 5. Check for open circuit and short circuit to ground and harness damage between generator connector B-25 (terminal No. 1) and ECM connector C-121 (terminal No. 8).

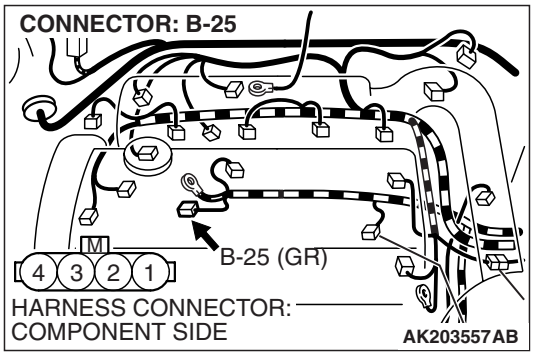

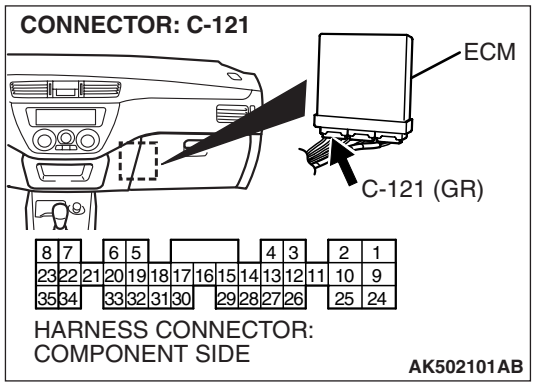

NOTE: Check harness after checking intermediate connector B-14. If intermediate connector is damaged, repair or replace it. Refer to GROUP 00E, Harness Connector Inspection P.00E-2. The confirm that the malfunction symptom is eliminated.

Q: Is the harness wire in good condition?

YES : Replace the ECM. Then confirm that the malfunction symptom is eliminated.

NO : Repair it. Then confirm that the malfunction symptom is eliminated.

INSPECTION PROCEDURE 27: Incorrect Idle Speed When The A/C is Operating (A/C load Signal)

A/C Switch 2 Signal Circuit

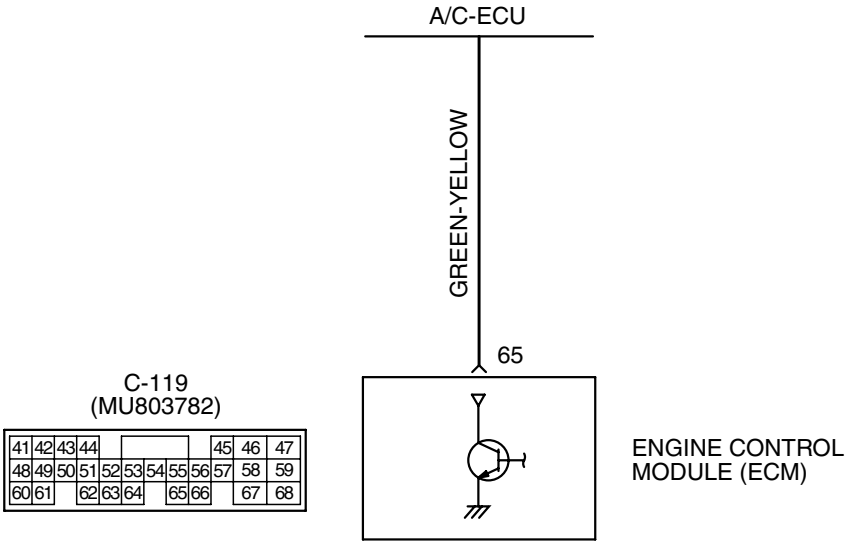

AK502092

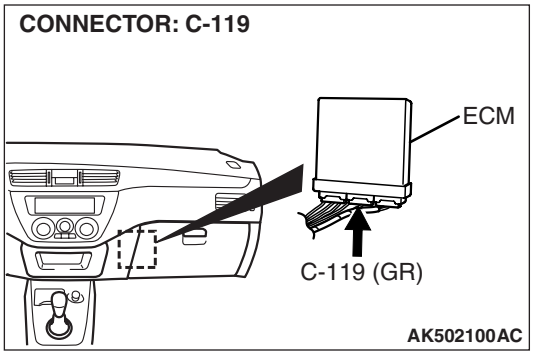

CIRCUIT OPERATION

- The ECM increases the engine idle speed by driving the IAC motor when the automatic compressor-ECU sends a "A/C on" signal to the module.
- The A/C-ECU detects how the air conditioning is applying load to the engine, and converts the information to a voltage signal (High voltage = low load, Low voltage = high load). This voltage signal is called "A/C switch 2 signal". The ECM receives this A/C switch 2 signal from the automatic compressor controller through terminal No. 65, and determines the idle-up speed according to the high or low air conditioning load.

TROUBLESHOOTING HINTS (The most likely causes for this code to be set are:)

- Malfunction of the A/C control system.
- Open or shorted circuit, or improper connector contact.
- ECM failed.

DIAGNOSIS

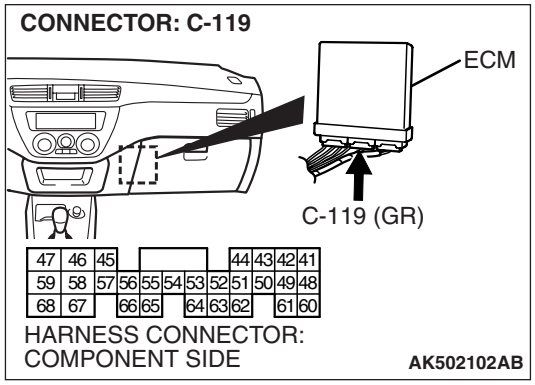

STEP 1. Check connector C-119 at ECM for damage.

Q: Is the connector in good condition?

YES : Go to Step 2.

NO : Repair or replace it. Refer to GROUP 00E, Harness Connector Inspection P.00E-2. Then confirm that the malfunction symptom is eliminated.

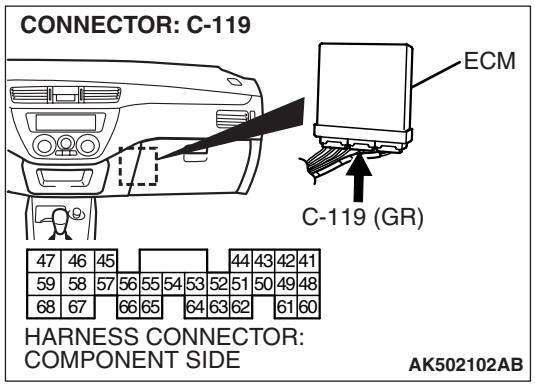

STEP 2. Measure the output voltage at ECM harness side connector C-119.

(1) Disconnect the connector C-119 and measure at the harness side.

(2) Start the engine and run at idle.

(3) Turn the A/C switch "ON".

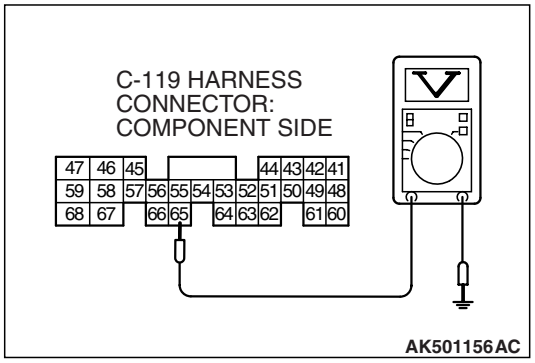

(4) Measure the voltage between terminal No. 65 and ground.
- If atmospheric air temperature is 15° C (59° F) or less, the voltage should measure 1 volt or less.
- If atmospheric air temperature is 18° C (65.4° F) more, the voltage should measure battery positive voltage.

(5) Turn the A/C switch "OFF".

(6) Turn the ignition switch to the "LOCK" (OFF) position.

Q: Is the measured voltage within the specified range?

YES : Replace the ECM. Then confirm that the malfunction symptom is eliminated.

NO : Refer to GROUP 55, Heater, Air Conditioning And Ventilation –Manual A/C Diagnosis –Symptom Chart P.55-5.

INSPECTION PROCEDURE 28: Radiator Fan is Inoperative

Radiator Fan Circuit

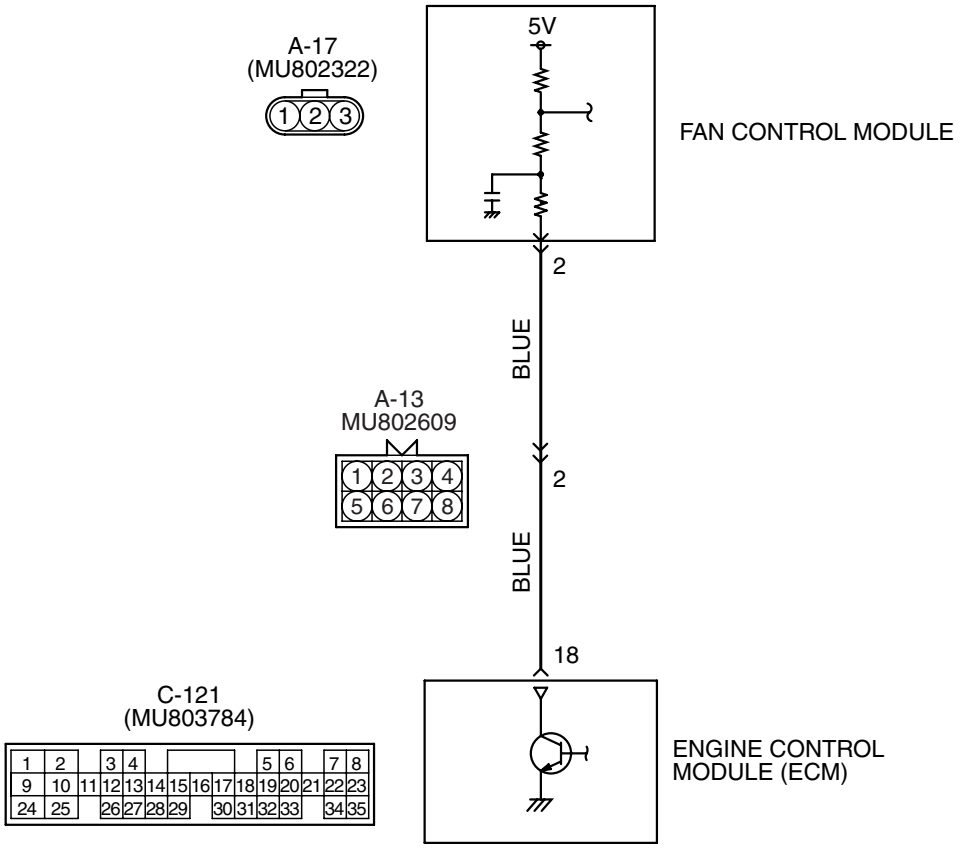

AK502093

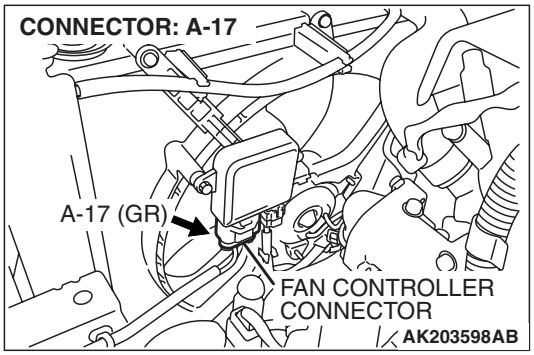

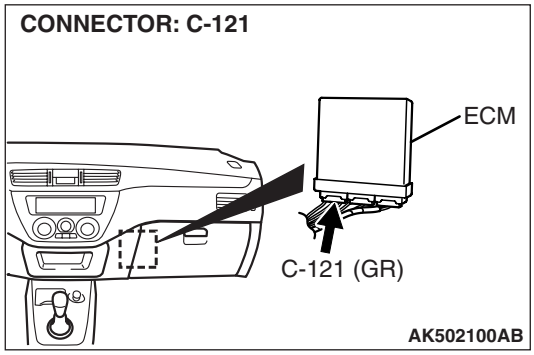

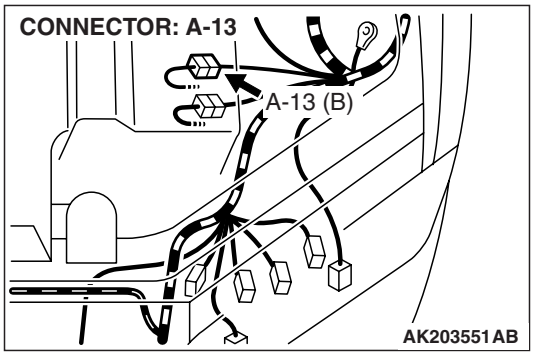

CIRCUIT OPERATION

- The ECM sends a duty signal to the fan control module according to engine coolant temperature, vehicle speed, and the condition of the A/C switch. (The closer the average voltage at the terminal comes to five volts, the higher the fan speed becomes.)

TROUBLESHOOTING HINTS (The most likely causes for this code to be set are:)

- Malfunction of the fan motor relay.
- Malfunction of the fan motor.
- Malfunction of the fan control module.
- Improper connector contact, open or short-circuited harness wire.
- ECM failed.

DIAGNOSIS

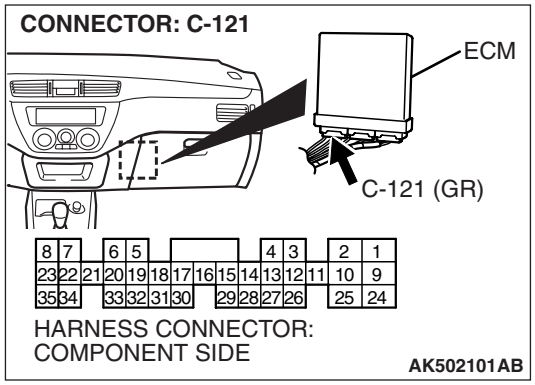

STEP 1. Check connector C-121 at ECM for damage.
Q: Is the connector in good condition?

YES : Go to Step 2.

NO : Repair or replace it. Refer to GROUP 00E, Harness Connector Inspection P.00E-2. Then confirm that the malfunction symptom is eliminated.

STEP 2. Check the output voltage at ECM harness side connector C-121.

(1) Disconnect the connector C-121 and measure at the harness side.
(2) Turn the ignition switch to the "ON" position.

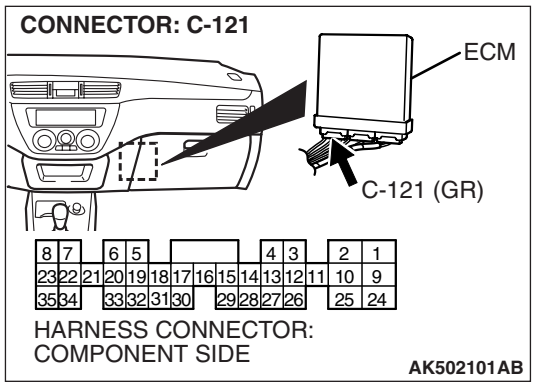

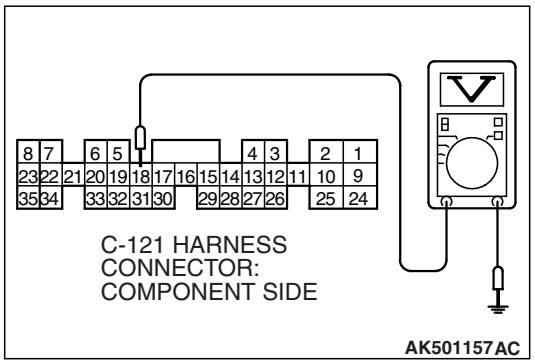

(3) Measure the voltage between terminal No. 18 and ground.
- Voltage should measure between 4.8 and 5.2 volts. (Fan rotates at high speed.)

(4) Connect a jumper cable between terminal No. 18 and ground.
- The fan should stop.

(5) Turn the ignition switch to the "LOCK" (OFF) position.

Q: Is the voltage and fan condition normal?

YES : Replace the ECM. Then confirm that the malfunction symptom is eliminated.

NO : Go to Step 3.

STEP 3. Check for open circuit and short circuit to ground and harness damage between fan control module A-17 (terminal No. 2) and ECM connector C-121 (terminal No. 18).

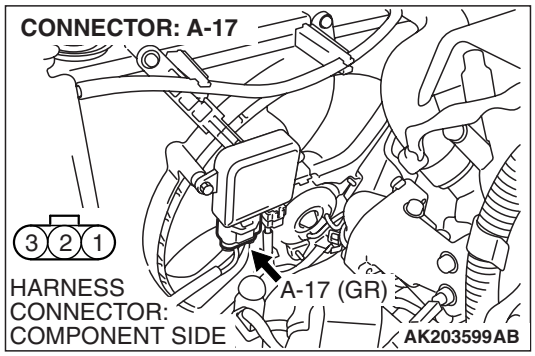

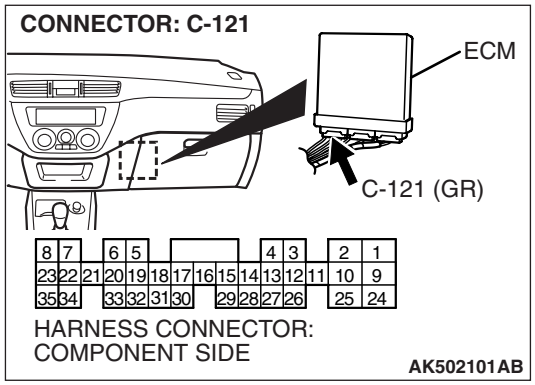

NOTE: Check harness after checking intermediate connector A-13. If the intermediate connector is damaged, repair or replace it. Refer to GROUP 00E, Harness Connector Inspection P.00E-2. Then confirm that the malfunction symptom is eliminated.

Q: Is the harness wire in good condition?

YES : Refer to GROUP 14, Engine Cooling Diagnosis – Symptom Chart P.14-4.

NO : Repair it. Then confirm that the malfunction symptom is eliminated.

INSPECTION PROCEDURE 29: A/C Condenser Fan is Inoperative

A/C Condenser Fan Circuit

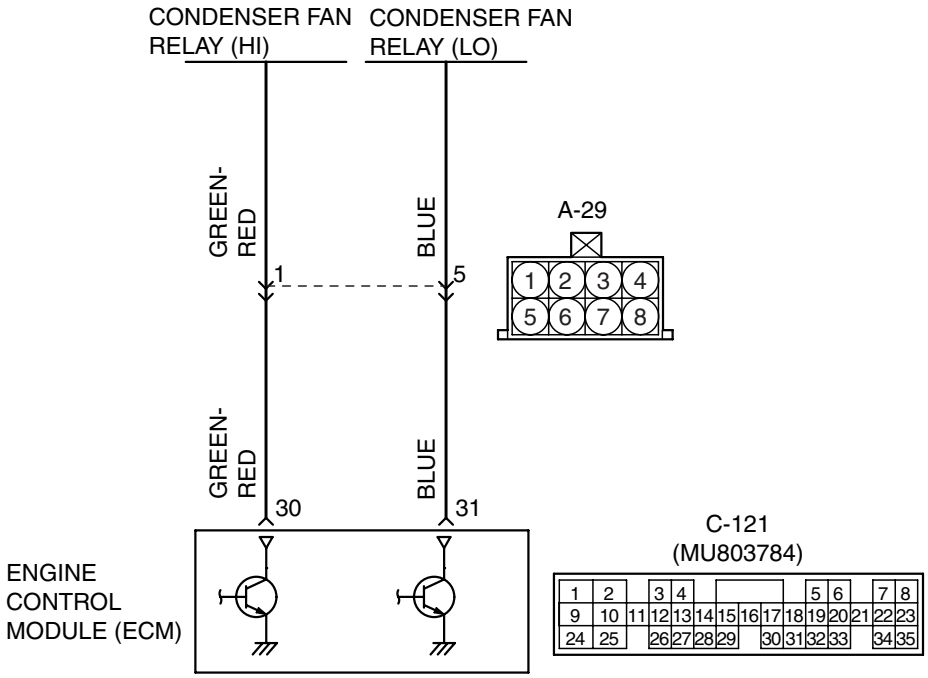

AK502094

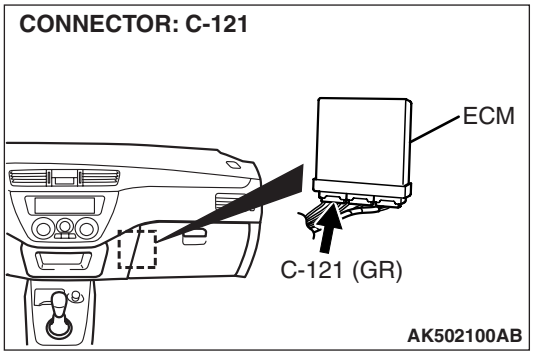

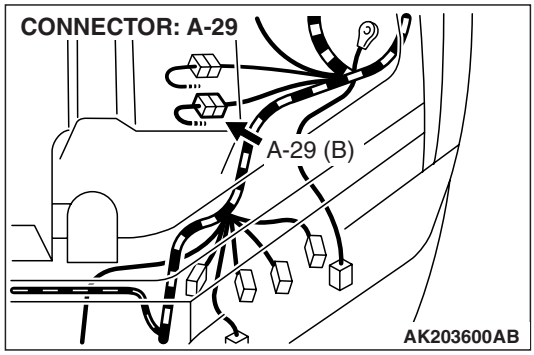

CIRCUIT OPERATION

- The battery positive voltage is applied on the ECM (terminal No. 31) from the condenser fan control relay (LO).
- The battery voltage is applied on the ECM (terminal 30) from the condenser fan control relay (HI).
- When the ECM switches on those power transistors, the condenser fan control relay coil is energized, causing current to flow in the circuit.

TROUBLESHOOTING HINTS (The most likely causes for this code to be set are:)

- Malfunction of the condenser fan control relay.
- Malfunction of the condenser fan motor.
- Improper connector contact, open or short-circuited harness wire.
- ECM failed.

DIAGNOSIS

STEP 1. Check harness connector C-121 at PCM for damage.

Q: Is the harness connector in good condition?

YES : Go to Step 2.

NO : Repair or replace it. Refer to GROUP 00E, Harness Connector Inspection P.00E-2. Then confirm that the malfunction symptom is eliminated.

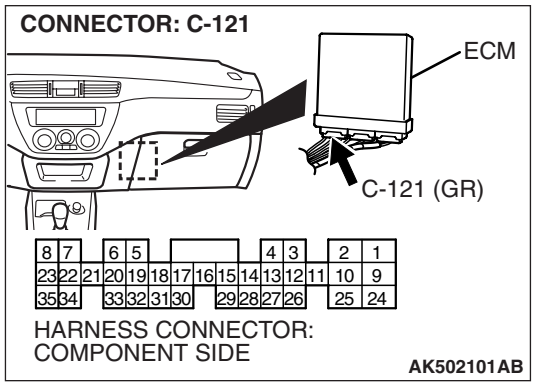

STEP 2. Measure the output voltage at ECM harness side connector C-121.

(1) Disconnect the connector C-121 and measure at the harness side.

(2) Turn the ignition switch to the "ON" position.

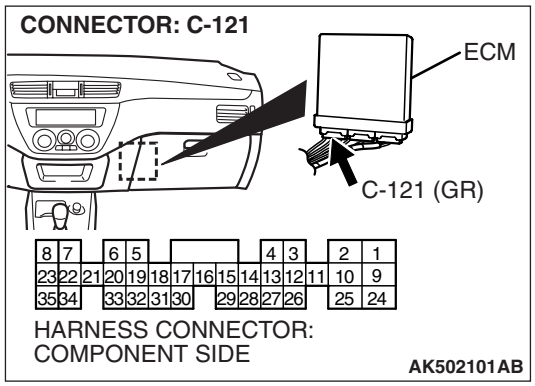

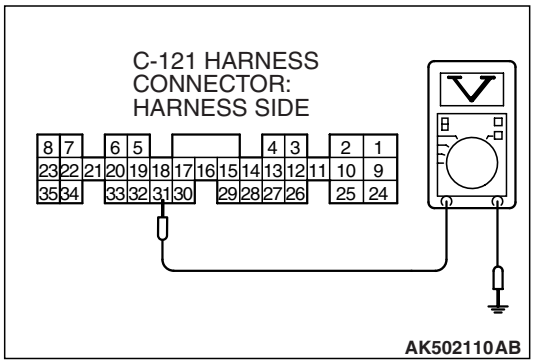

(3) Measure the voltage between terminal No. 31 and ground.
- Voltage should be battery positive voltage.

(4) Check the condenser fan condition.
- When the terminal No. 31 is disconnected, the fan should stop.
- When the terminal No. 31 is grounded by the jumper cable, the fan should run.

(5) Turn the ignition switch to the "LOCK" (OFF) position.

Q: Is the voltage and fan condition normal?

YES : Go to Step 3.

NO : Refer to GROUP 55, Introduction To Heater, Air Conditioning And Ventilation Diagnosis P.55-5.

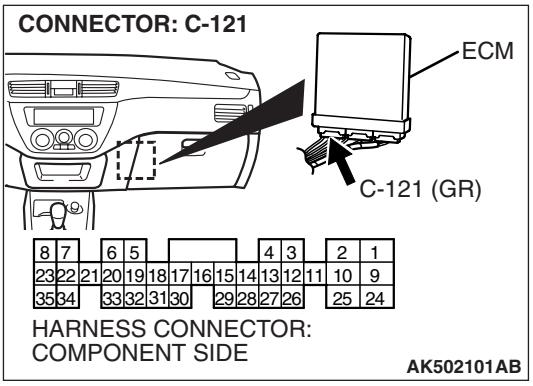

STEP 3. Measure the output voltage at ECM harness side connector C-121.

(1) Disconnect the connector C-121 and measure at the harness side.

(2) Turn the ignition switch to the "ON" position.

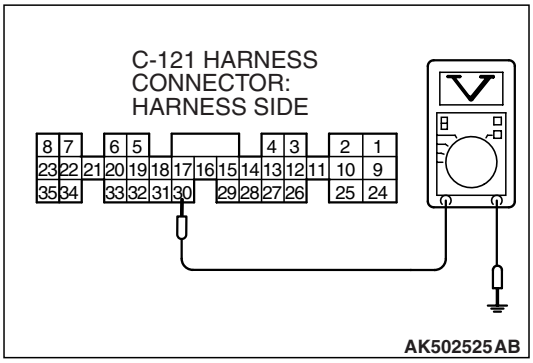

(3) Measure the voltage between terminal No. 30 and ground.
- Voltage should be battery positive voltage.

(4) Check the condenser fan condition.
- When the terminal No. 30 is disconnected, the fan should stop.
- When the terminal No. 30 is grounded by the jumper cable, the fan should run.

(5) Turn the ignition switch to the "LOCK" (OFF) position.

Q: Is the voltage and fan condition normal?

YES : Replace the ECM. Then confirm that the malfunction symptom is eliminated.

NO : Refer to GROUP 55, Introduction To Heater, Air Conditioning And Ventilation Diagnosis P.55-5.

INSPECTION PROCEDURE 30: Power Supply System and Ignition Switch-IG System

Power Supply and Ignition Switch-IG Circuit

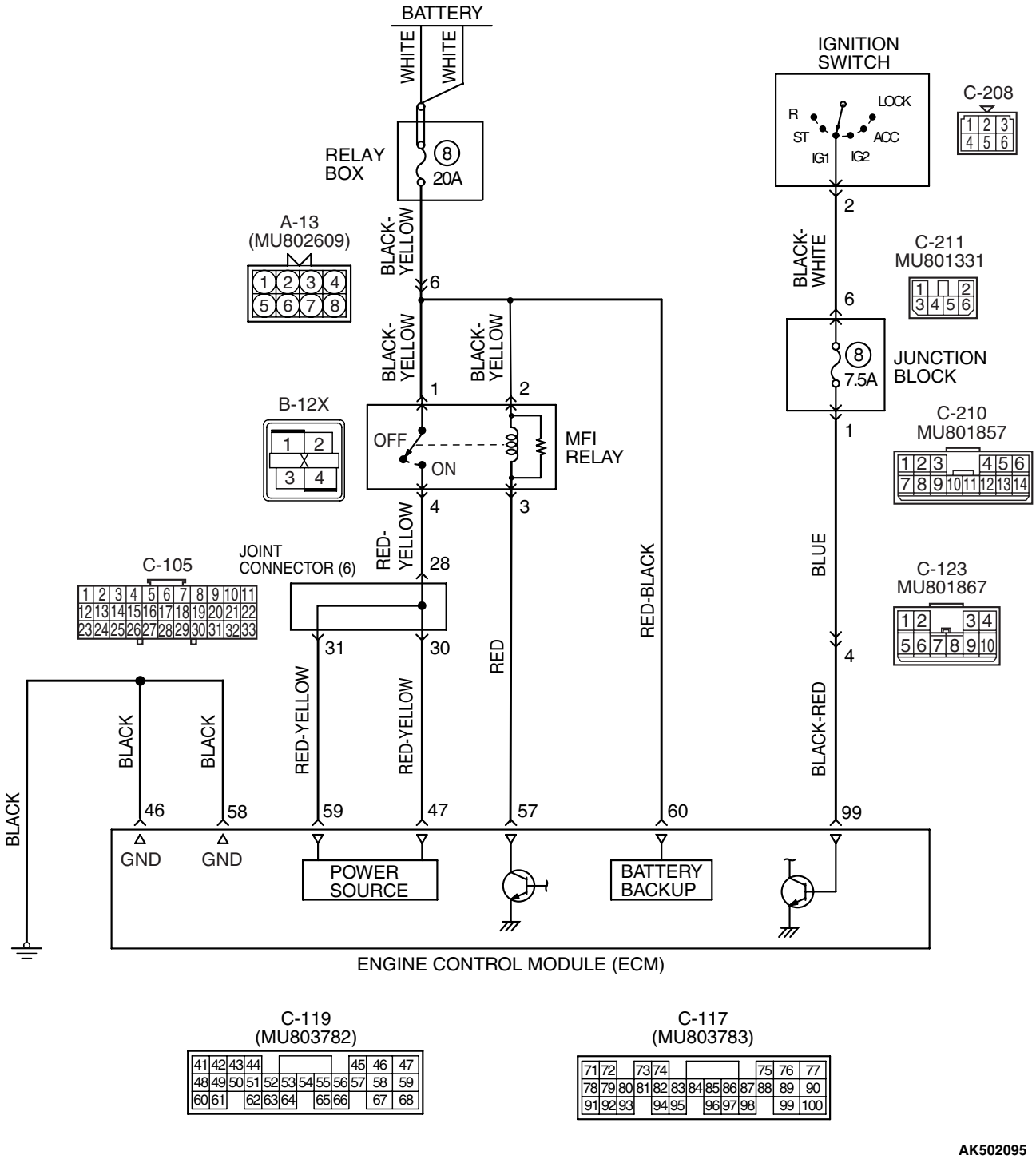

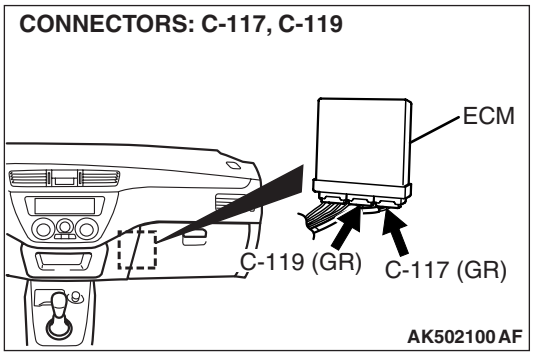
CONNECTORS: C-117, C-119
ECM
C-119 (GR)
C-117 (GR)
AK502100AF

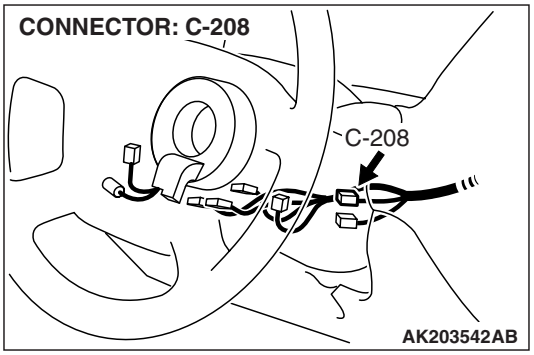
CONNECTOR: C-208
C-208
AK203542AB

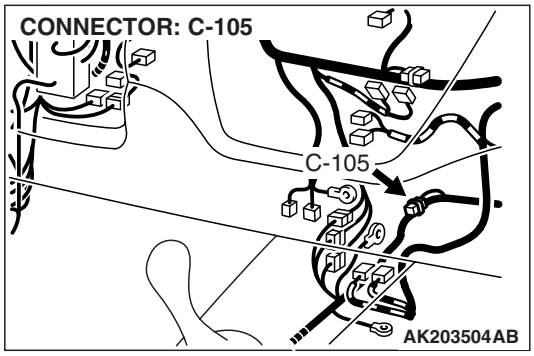
CONNECTOR: C-105
C-105
AK203504AB

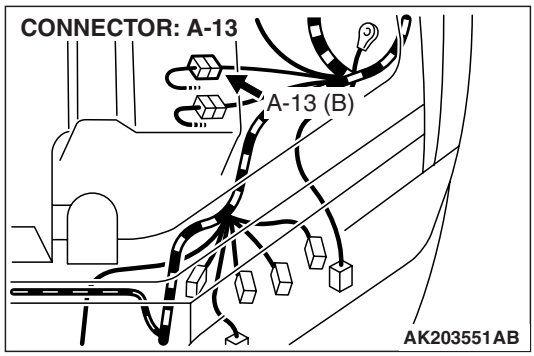
CONNECTOR: A-13
A-13 (B)
AK203551AB

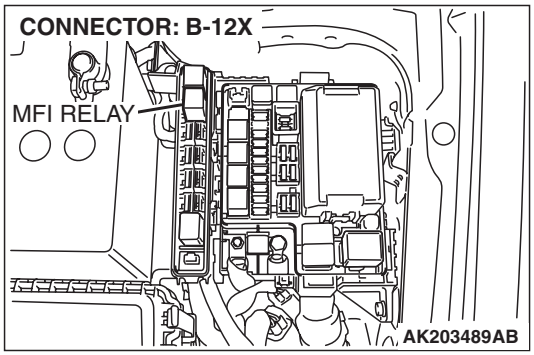
CONNECTOR: B-12X
MFI RELAY
AK203489AB

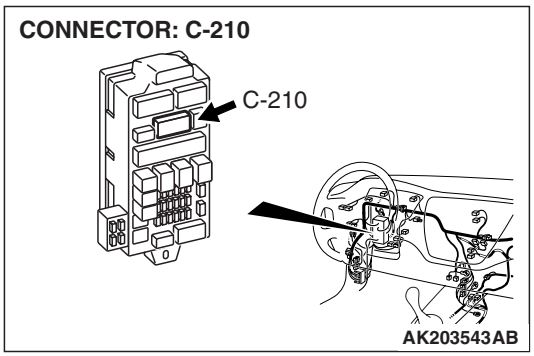
CONNECTOR: C-210
C-210
AK203543AB

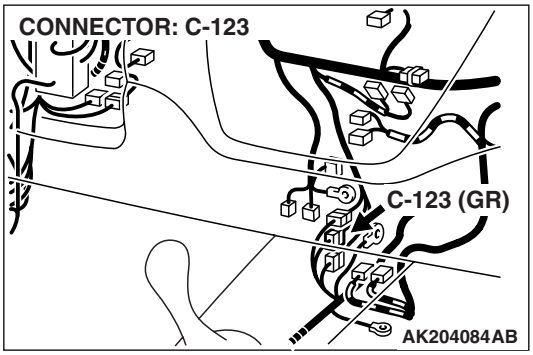
CONNECTOR: C-123
C-123 (GR)
AK204084AB

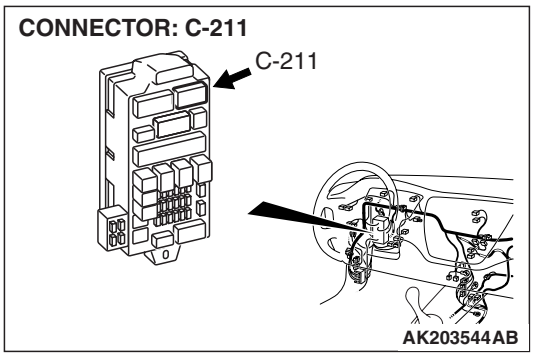
CONNECTOR: C-211
C-211
AK203544AB

CIRCUIT OPERATION

- Battery positive voltage is applied to the MFI relay (terminals No. 1, No. 2).
- When the ignition switch is turned to the "ON" position, the battery positive voltage is applied to the ECM (terminal No. 99). When the battery positive voltage is applied, the ECM turns the power transistor in the ECM "ON" and grounds the MFI relay coil. With this, the MFI relay turns "ON" and the battery positive voltage is supplied to the ECM (terminals No. 47, No. 59) from the MFI relay (terminal No. 4).
- Battery positive voltage is constantly supplied to the ECM (terminal No. 60) as the backup power.
- The ECM (terminals No. 46, No. 58) is grounded to the vehicle body.

TROUBLESHOOTING HINTS (The most likely causes for this code to be set are:)

- Malfunction of the ignition switch.
- Malfunction of the MFI relay.
- Improper connector contact, open circuit or short-circuited harness wire.
- Disconnected ECM ground wire.
- Malfunction of the ECM.

DIAGNOSIS

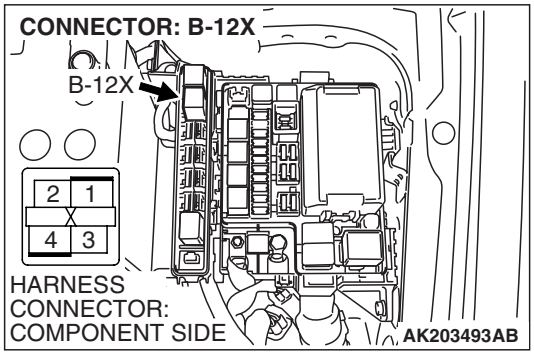

STEP 1. Check connector B-12X at MFI relay for damage.

Q: Is the connector in good condition?

YES : Go to Step 2.

NO : Repair or replace it. Refer to GROUP 00E, Harness Connector Inspection P.00E-2. Then confirm that the malfunction symptom is eliminated.

STEP 2. Check the MFI relay.

(1) Remove the MFI relay.

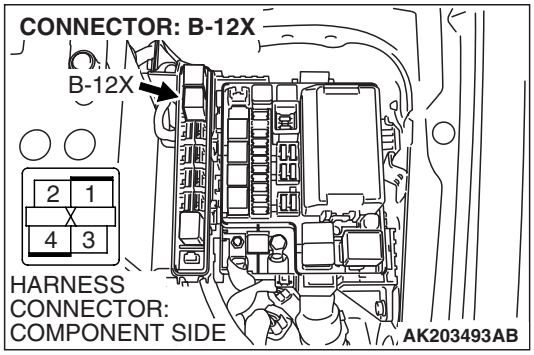

(2) Check for continuity between the MFI relay terminals No. 2 and No. 3.
- There should be continuity. (approximately 70 ohms)

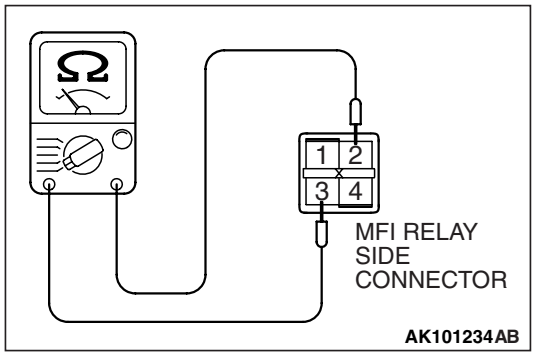

(3) Use jumper wires to connect MFI relay terminal No. 2 to the positive battery terminal and terminal No. 3 to the negative battery terminal.

(4) Check for continuity between the MFI relay terminals No. 1 and No. 4 while connecting and disconnecting the jumper wire at the negative battery terminal.
- Should be less than 2 ohms. (Negative battery terminal connected)
- Should be open loop. (Negative battery terminal disconnected)

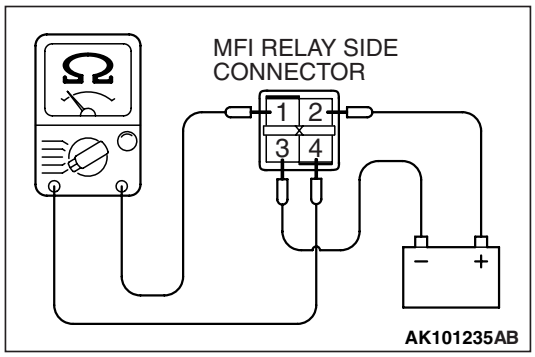

(5) Install the MFI relay.

Q: Is the measured voltage within the specified range?

YES : Go to Step 3.

NO : Replace the MFI relay. Then confirm that the malfunction symptom is eliminated.

STEP 3. Measure the power supply voltage at MFI relay harness side connector B-12X.

(1) Disconnect the connector B-12X and measure at the harness side.

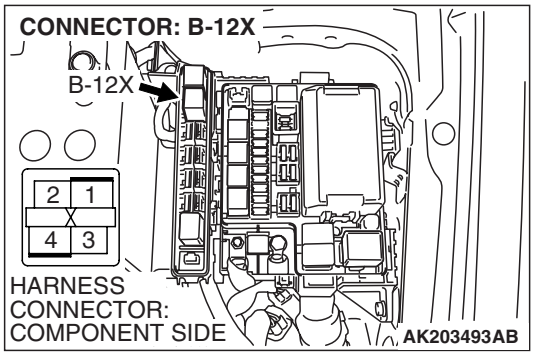

(2) Measure the voltage between terminals No. 1, No. 2 and ground.
- Voltage should measure battery positive voltage.

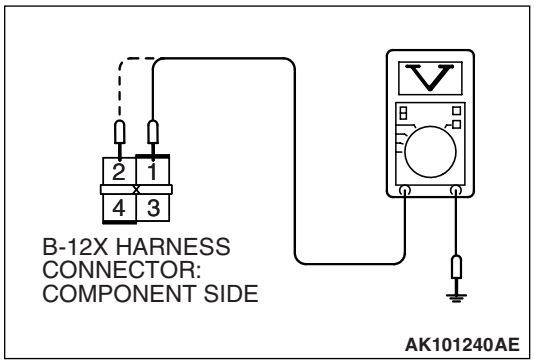

Q: Is battery positive voltage (approximately 12 volts) present?

YES : Go to Step 4.

NO : Check harness connector A-13 at intermediate connector for damage, and repair or replace as required. Refer to, GROUP 00E, Harness Connector Inspection P.00E-2. If intermediate connector is in good condition, repair harness wire between relay box (fuse 8) and MFI relay connector B-12X (terminals No. 1, No. 2) because of open circuit. Then confirm that the malfunction symptom is eliminated.

STEP 4. Check connector C-117 at ECM for damage.

Q: Is the connector in good condition?

YES : Go to Step 5.

NO : Repair or replace it. Refer to GROUP 00E, Harness Connector Inspection P.00E-2. Then confirm that the malfunction symptom is eliminated.

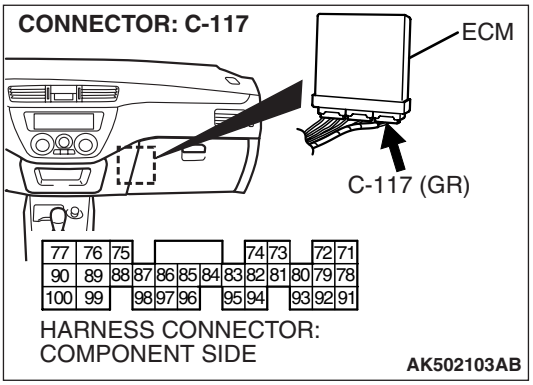

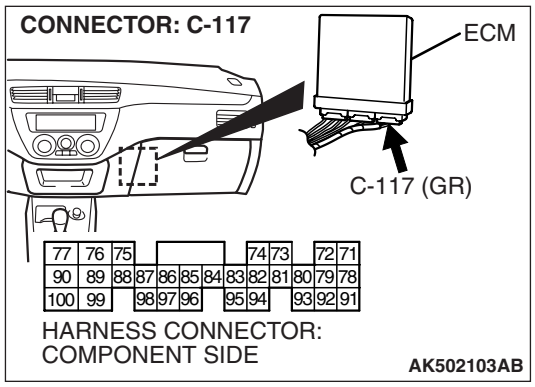

STEP 5. Measure the ignition switch-IG signal voltage at ECM harness side connector C-117.

(1) Disconnect the connector C-117 and measure at the harness side.

(2) Turn the ignition switch to the "ON" position.

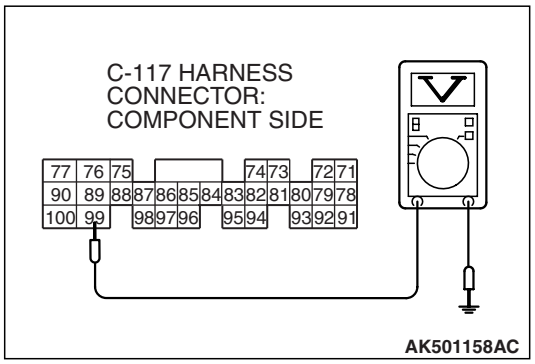

(3) Measure the voltage between terminal No. 99 and ground.
- Voltage should measure battery positive voltage.

(4) Turn the ignition switch to the "LOCK" (OFF) position.

Q: Is battery positive voltage (approximately 12 volts) present?

YES : Go to Step 6.

NO : Check harness connectors C-123, C-210 and C-211 at intermediate connector for damage, and repair or replace as required. Refer to, GROUP 00E, Harness Connector Inspection P.00E-2. If the intermediate connectors are in good condition, repair the harness wire between ignition switch connector C-208 (terminal No. 2) and ECM connector C-117 (terminal No. 99) because of open circuit. Then confirm that the malfunction symptom is eliminated.

STEP 6. Measure the backup power supply voltage at ECM harness side connector C-119.

(1) Disconnect the connector C-119 and measure at the harness side.

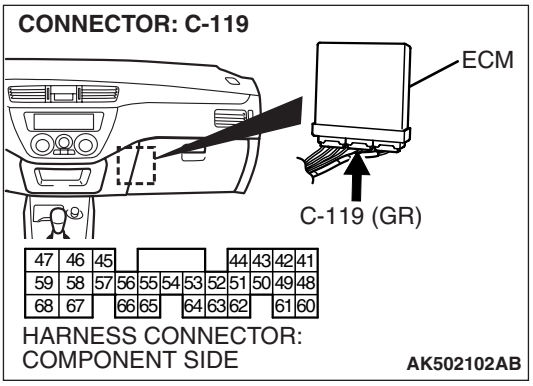

(2) Measure the voltage between terminal No. 60 and ground.
- Voltage should measure battery positive voltage.

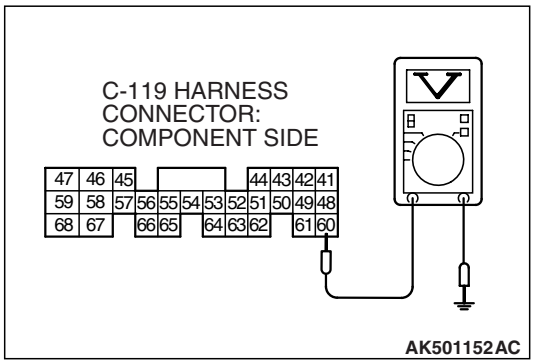

Q: Is battery positive voltage (approximately 12 volts) present?

YES : Go to Step 7.

NO : Check harness connector A-13 at intermediate connector for damage, and repair or replace as required. Refer to, GROUP 00E, Harness Connector Inspection P.00E-2. If the intermediate connectors are in good condition, repair the harness wire between relay box (fuse 8) and ECM connector C-119 (terminal No. 60) because of open circuit. Then confirm that the malfunction symptom is eliminated.

STEP 7. Check for continuity at ECM harness side connector C-119.

(1) Disconnect the connector C-119 and measure at the harness side.

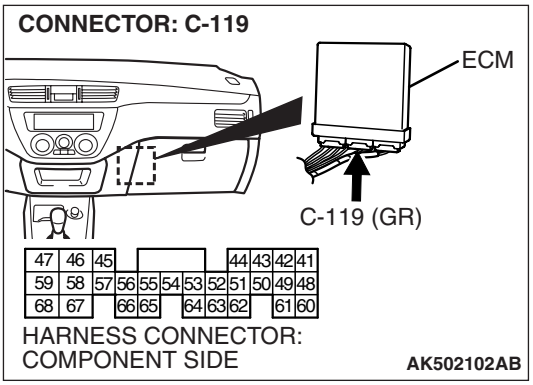

(2) Check for the continuity between terminals (No. 46, No. 58) and ground.
- Should be less than 2 ohms.

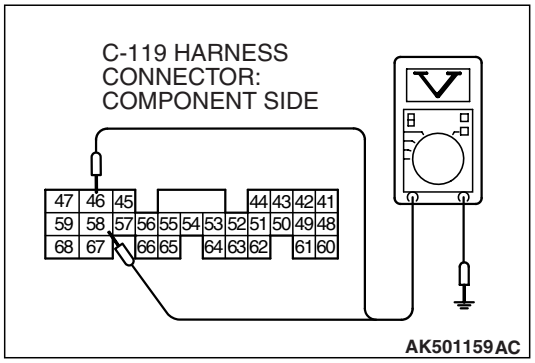

Q: Does continuity exist?

YES : Go to Step 8.

NO : Repair harness wire between ECM connector C-119 (terminals No. 46, No. 58) and ground because of open circuit. Then confirm that the malfunction symptom is eliminated.

STEP 8. Measure the power supply voltage at ECM harness side connector C-119.

(1) Disconnect the connector C-119 and measure at the harness side.

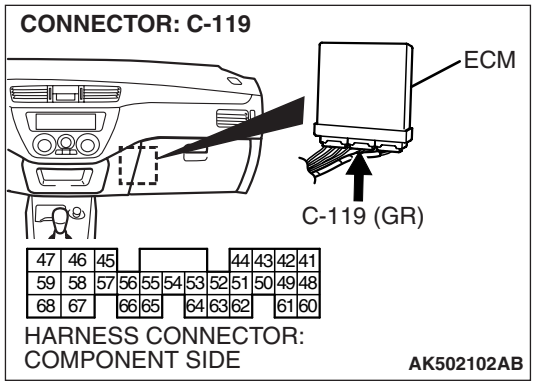

(2) Measure the voltage between terminal No. 57 and ground.
- Voltage should measure battery positive voltage.

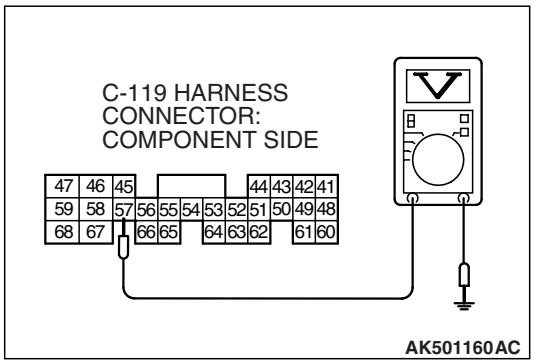

Q: Is battery positive voltage (approximately 12 volts) present?

YES : Go to Step 9.

NO : Repair harness wire between MFI relay connector B-12X (terminal No. 3) and ECM connector C-119 (terminal No. 57) because of open circuit. Then confirm that the malfunction symptom is eliminated.

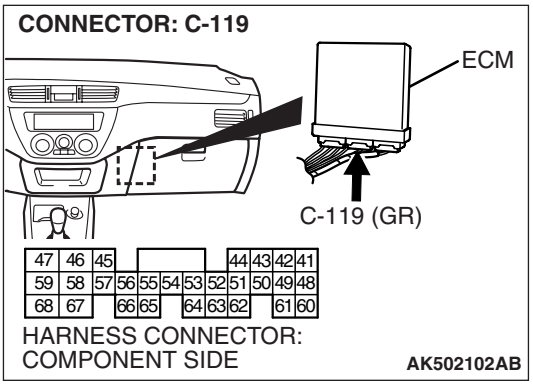

STEP 9. Measure the power supply voltage at ECM harness side connector C-119.

(1) Disconnect the connector C-119 and measure at the harness side.

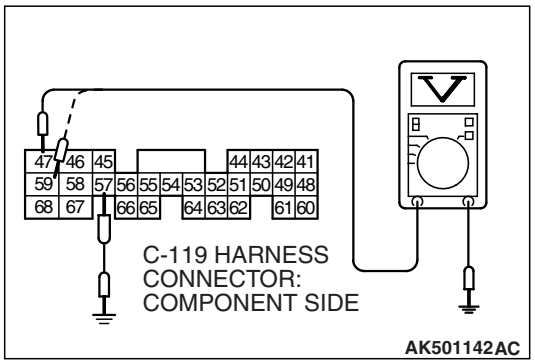

(2) Using a jumper wire, connect terminal No. 57 to ground.
(3) Measure the voltage between terminals (No. 47, No. 59) and ground.
- Voltage should measure battery positive voltage.

Q: Is battery positive voltage (approximately 12 volts) present?

YES : Replace the ECM. Then confirm that the malfunction symptom is eliminated.

NO : Check connector C-105 at intermediate connector for damage, and repair or replace as required. Refer to GROUP 00E, Harness Connector Inspection P.00E-2. If the intermediate connector is in good condition, repair the harness wire between MFI relay connector B-12X (terminal No. 4) and ECM connector C-119 (terminals No. 47, No. 59) because of open circuit. Then confirm that the malfunction symptom is eliminated.

INSPECTION PROCEDURE 31: Fuel Pump System

Fuel Pump Circuit

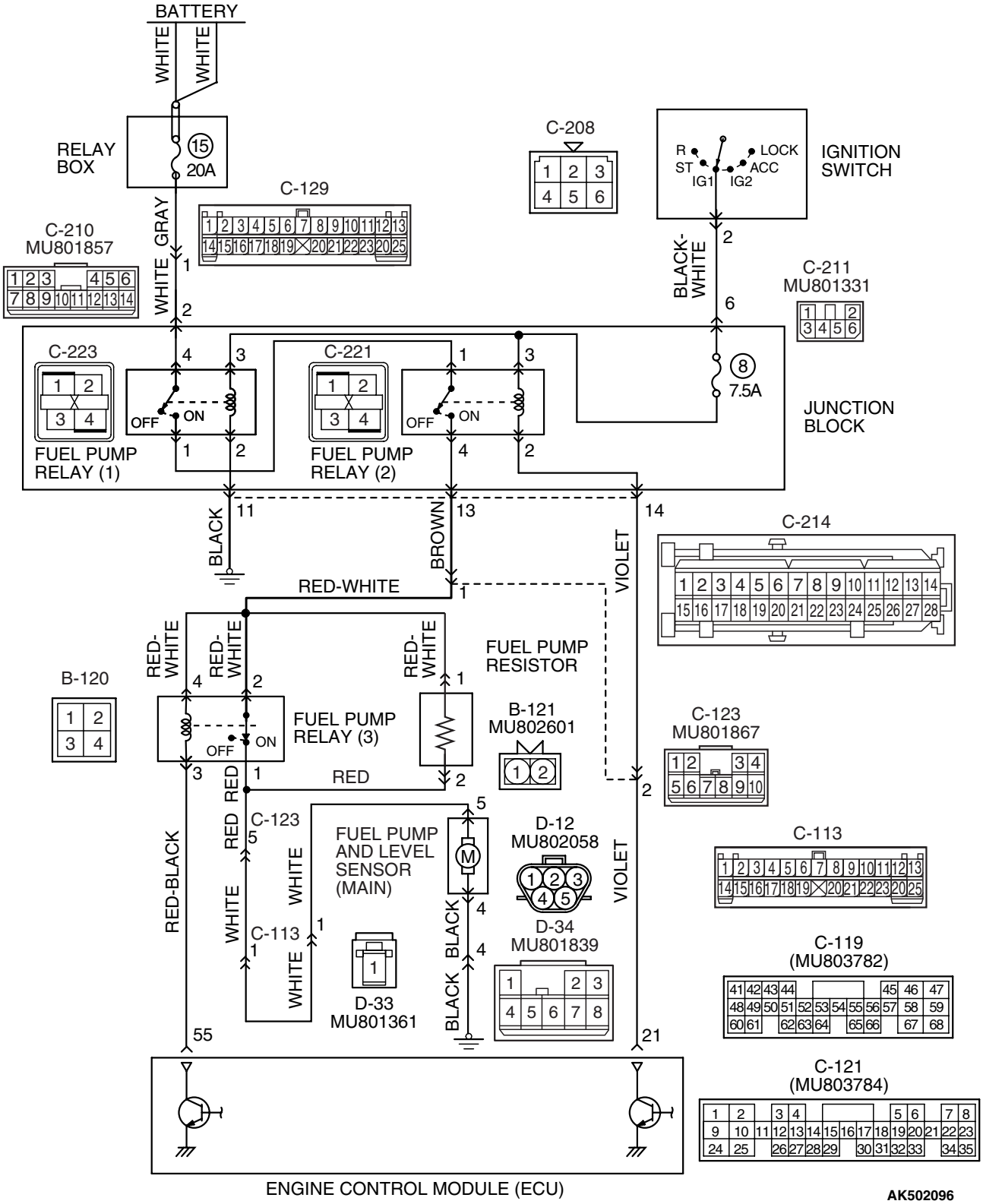

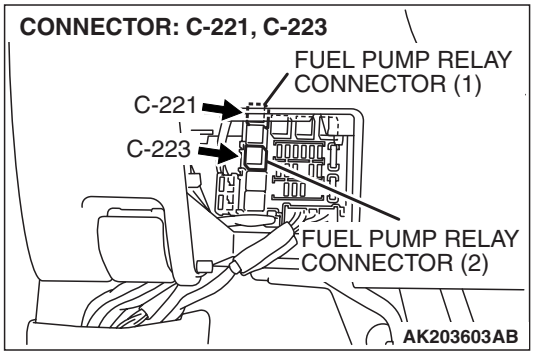
CONNECTOR: C-221, C-223
FUEL PUMP RELAY CONNECTOR (1)
C-221
C-223
FUEL PUMP RELAY CONNECTOR (2)
AK203603AB

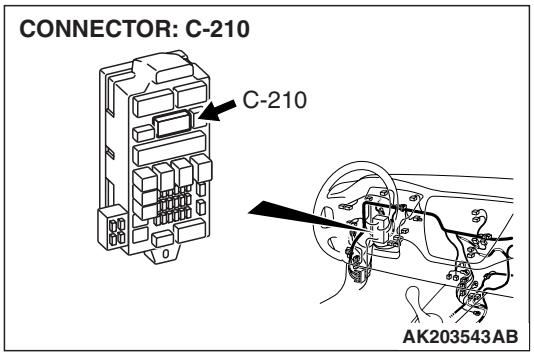
CONNECTOR: C-210
C-210
AK203543AB

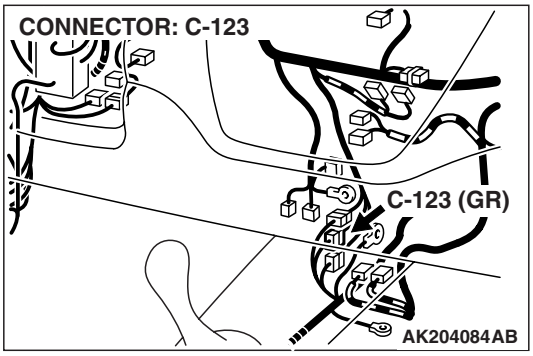
CONNECTOR: C-123
C-123 (GR)
AK204084AB

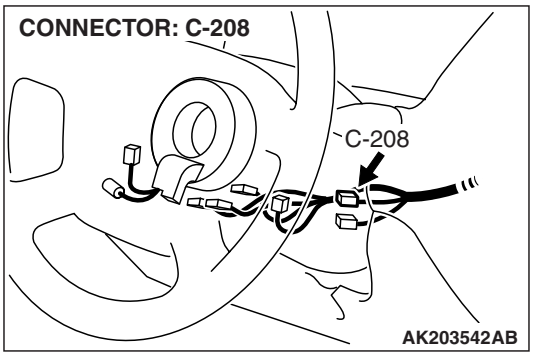
CONNECTOR: C-208
C-208
AK203542AB

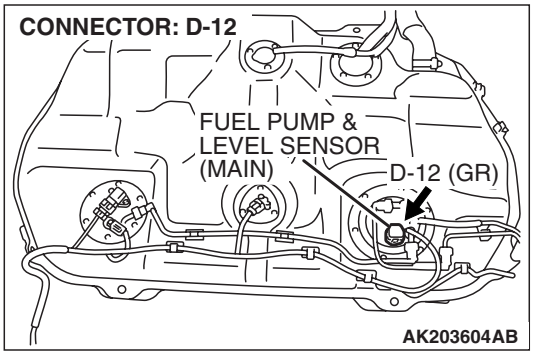
CONNECTOR: D-12
FUEL PUMP & LEVEL SENSOR (MAIN)
D-12 (GR)
AK203604AB

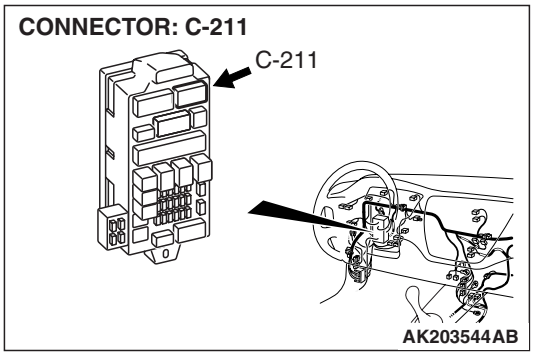
CONNECTOR: C-211
C-211
AK203544AB

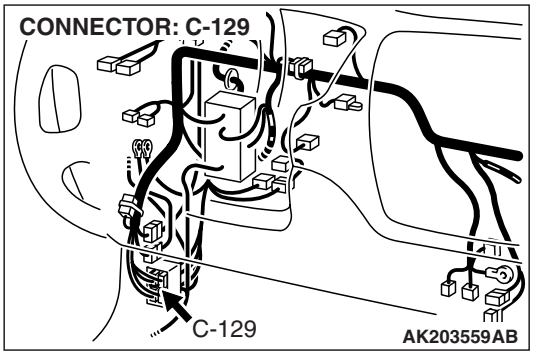
CONNECTOR: C-129
C-129
AK203559AB

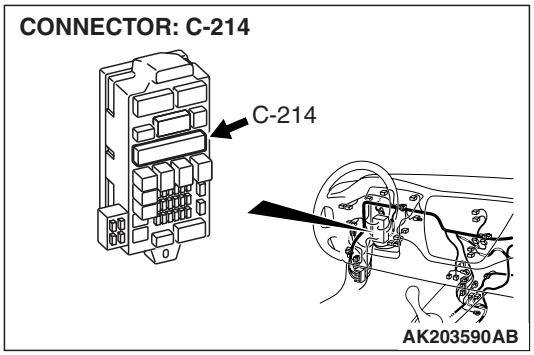
CONNECTOR: C-214
C-214
AK203590AB

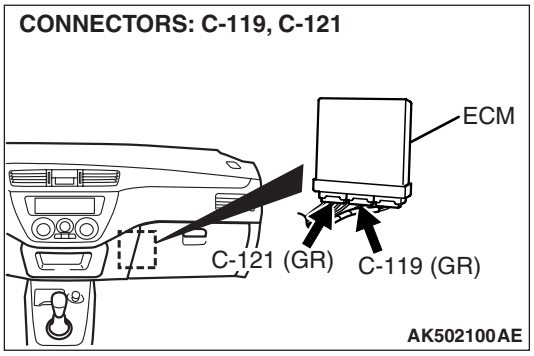
CONNECTORS: C-119, C-121
ECM
C-121 (GR)
C-119 (GR)
AK502100AE

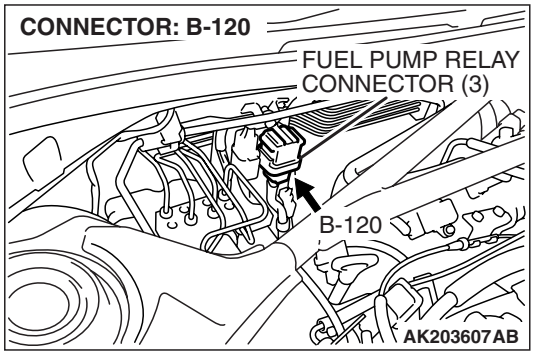
CONNECTOR: B-120
FUEL PUMP RELAY CONNECTOR (3)
B-120
AK203607AB

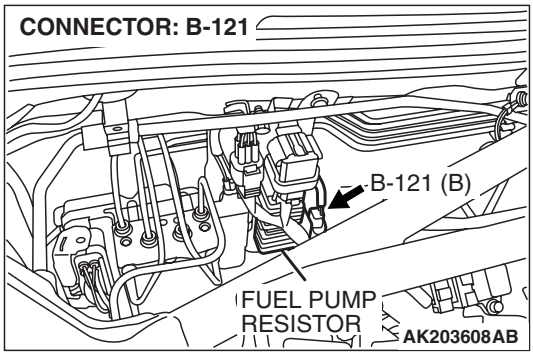

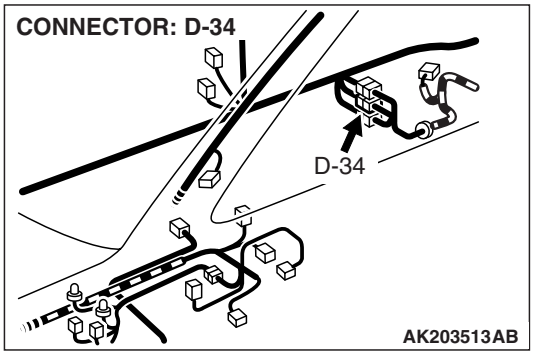

CIRCUIT OPERATION

- Battery positive voltage is applied to the fuel pump relay 1 (terminal No. 3) from the ignition switch-IG.
  Ground is provided through terminal No. 2 to chassis ground.
- When the ignition switch is turned to the "ON" position, the battery positive voltage is applied to the fuel pump relay 2 (terminal No. 1) from the fuel pump relay 1 (terminal No. 1).
- Battery positive voltage is applied to the fuel pump relay 2 (terminal No. 3) from the ignition switch-IG.
- During cranking and while the engine is running, the ECM turns ON the power transistor in the ECM in order to ground the coil of the fuel pump relay 2. Consequently, the fuel pump relay 2 turns ON, and the fuel pump relay 2 (terminal No. 4) supplies the battery positive voltage to the fuel pump and the fuel pump circuit resistor.
- While the engine operates with a light load, the ECM turns ON the power transistor in the ECM in order to ground the coil of the fuel pump relay 3. Consequently, the fuel pump relay 3 turns OFF, and the fuel pump resistor (terminal No. 2) supplies the battery positive voltage to the fuel pump (terminal No. 5).
  While the engine operates with a heavy load, the ECM turns OFF the power transistor in the ECM, causing the fuel pump relay 3 to turn ON. Consequently, the fuel pump relay 3 (terminal No. 1) supplies power directly to the fuel pump (terminal No. 5).

TROUBLESHOOTING HINTS (The most likely causes for this code to be set are:)

- Malfunction of the fuel pump relay.
- Malfunction of the fuel pump.
- Malfunction of the fuel pump resistor.
- Improper connector contact, open or short-circuited harness wire.
- Malfunction of the ECM.

DIAGNOSIS

Required Special Tools:

- MB991958: Scan Tool (M.U.T.-III Sub Assembly)
  - MB991824: V.C.I.
  - MB991827: USB Cable
  - MB991911: Main Harness B

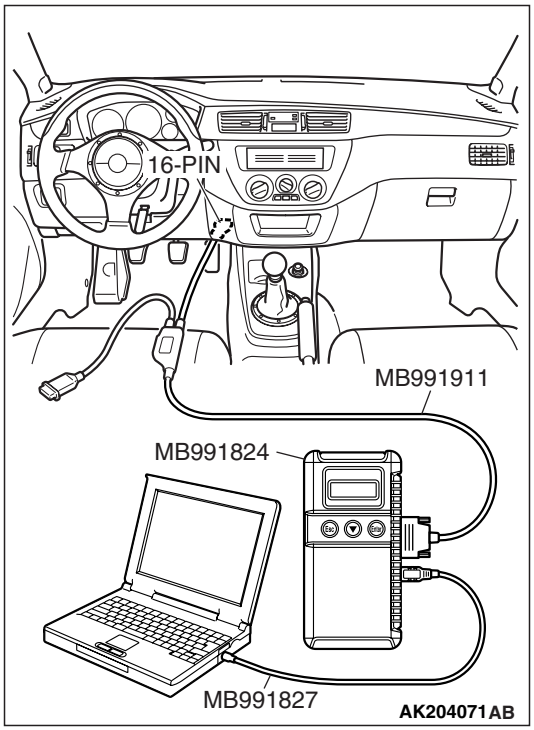

STEP 1. Using scan tool MB991958, check actuator test item 07: Fuel Pump.

⚠ CAUTION

To prevent damage to scan tool MB991958, always turn the ignition switch to the "LOCK" (OFF) position before connecting or disconnecting scan tool MB991958.

(1) Connect scan tool MB991958 to the data link connector.
(2) Turn the ignition switch to the "ON" position.
(3) Set scan tool MB991958 to the actuator test mode for item 07, Fuel Pump.
- An operation sound of the fuel pump should be heard. (fuel pump operates at a low speed)

(4) Turn the ignition switch to the "LOCK" (OFF) position.

Q: Is the fuel pump operating properly?

YES : Go to Step 2.
NO : Go to Step 3.

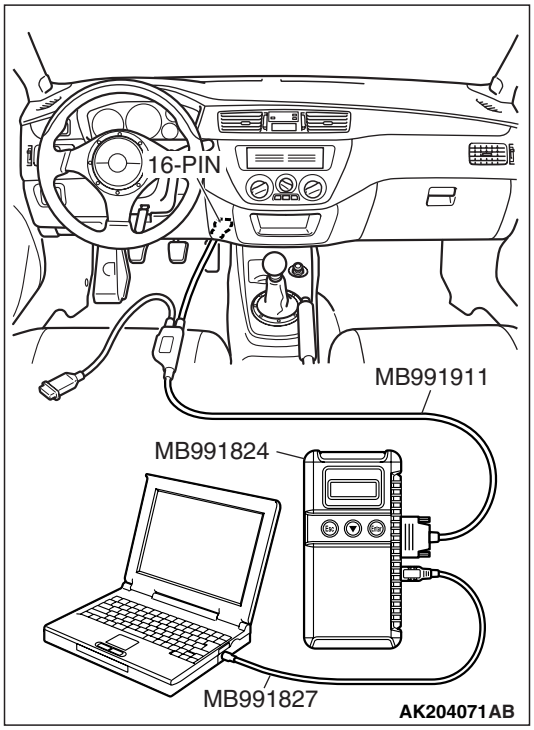

STEP 2. Using scan tool MB991958, check actuator test item 13: Fuel Pump relay 3.

⚠ CAUTION

To prevent damage to scan tool MB991958, always turn the ignition switch to the "LOCK" (OFF) position before connecting or disconnecting scan tool MB991958.

(1) Connect scan tool MB991958 to the data link connector.
(2) Turn the ignition switch to the "ON" position.
(3) Set scan tool MB991958 to the actuator test mode for Item 13, fuel pump relay 3.
- An operation sound of the fuel pump should be heard. (fuel pump operates at a high speed)

(4) Turn the ignition switch to the "LOCK" (OFF) position.

Q: Is the operation sound heard at high speed?

YES : That this malfunction is intermittent. Refer to GROUP 00, How to Use Troubleshooting/Inspection Service Points –How to Cope with Intermittent Malfunctions P.00-13.
NO : Go to Step 19.

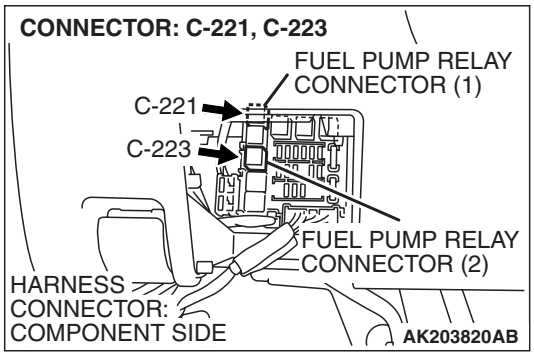

STEP 3. Check connector C-223 at fuel pump relay 1 and connector C-221 at fuel pump relay 2 for damage.

Q: Is the connector in good condition?

YES : Go to Step 4.

NO : Repair or replace it. Refer to GROUP 00E, Harness Connector Inspection P.00E-2. Then confirm that the malfunction symptom is eliminated.

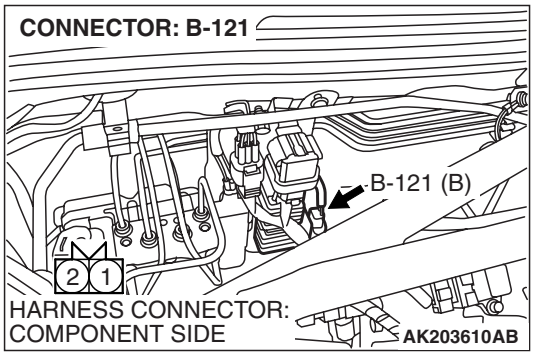

STEP 4. Check connector B-121 at fuel pump resistor for damage.

Q: Is the connector in good condition?

YES : Go to Step 5.

NO : Repair or Replace it. Refer to GROUP 00E, Harness Connector Inspection P.00E-2. Then confirm that the malfunction symptom is eliminated.

STEP 5. Check the fuel pump relay 1 and 2.

(1) Remove the fuel pump relay.

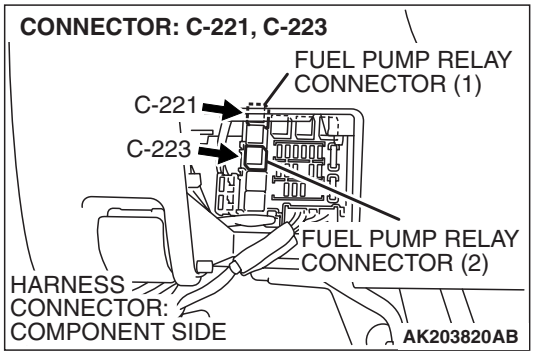

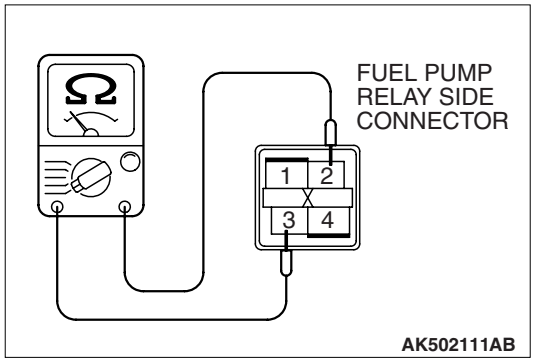

(2) Check for continuity between the fuel pump relay terminals No. 2 and No. 3.
- There should be continuity. (approximately 70 ohms)

(3) Use jumper wires to connect fuel pump relay terminal No. 3 to the positive battery terminal and terminal No. 2 to the negative battery terminal.

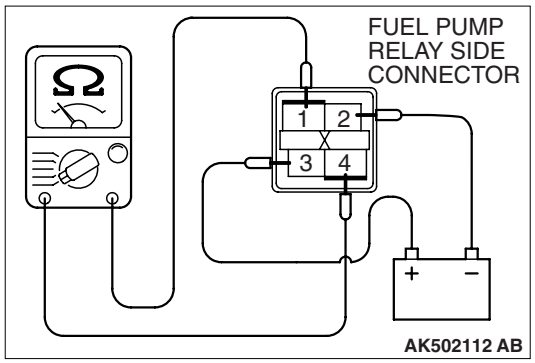

(4) Check for continuity between the fuel pump relay terminals No. 1 and No. 4 while connecting and disconnecting the jumper wire at the negative battery terminal.
- Should be less than 2 ohms. (Negative battery terminal connected)
- Should be open loop. (Negative battery terminal disconnected)

(5) Install the fuel pump relay.

Q: Is the resistance normal?

YES : Go to Step 6.

NO : Replace the fuel pump relay. Then confirm that the malfunction symptom is eliminated.

STEP 6. Check the fuel pump resistor.

(1) Disconnect the fuel pump resistor connector B-121.

(2) Measure the resistance between fuel pump resistor side connector terminal No. 1 and No. 2.

Standard value: 0.45 – 0.65 ohm

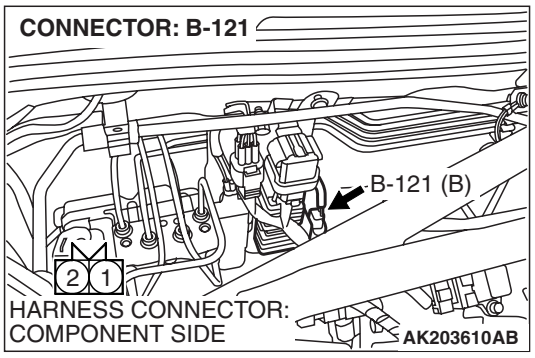

Q: Is the resistance between 0.45 and 0.65 ohm [at 20° C (68° F)]?

YES : Go to Step 7.

NO : Replace the fuel pump resistor. Then confirm that the malfunction symptom is eliminated.

STEP 7. Measure the power supply voltage at fuel pump relay 1 harness side connector C-223.

(1) Disconnect the connector C-223 and measure at the harness side.

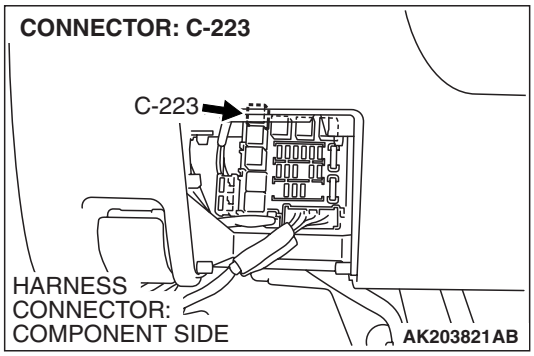

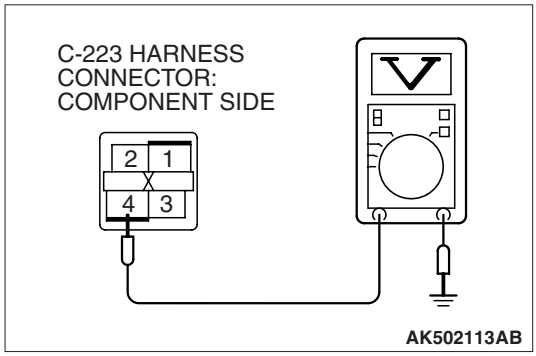

(2) Measure the voltage between terminal No. 4 and ground.
- Voltage should measure battery positive voltage.

Q: Is battery positive voltage (approximately 12 volts) present?

YES : Go to Step 8.

NO : Check harness connectors C-129 and C-210 at intermediate connector for damage, and repair or replace as required. Refer to, GROUP 00E, Harness Connector Inspection P.00E-2. If the intermediate connectors are in good condition, repair the harness wire between relay box (fuse 15) and fuel pump relay 1 connector C-223 (terminal No. 4) because of open circuit. Then confirm that the malfunction symptom is eliminated.

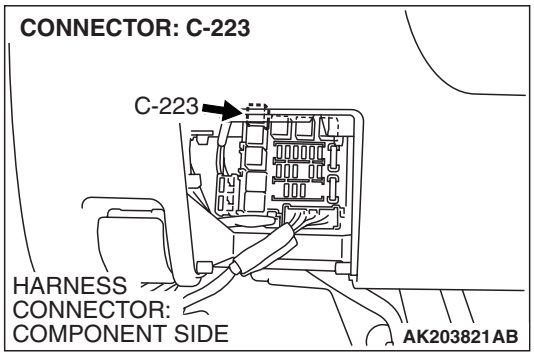

STEP 8. Measure the power supply voltage at fuel pump relay 1 harness side connector C-223.

(1) Disconnect the connector C-223 and measure at the harness side.

(2) Turn the ignition switch to the "ON" position.

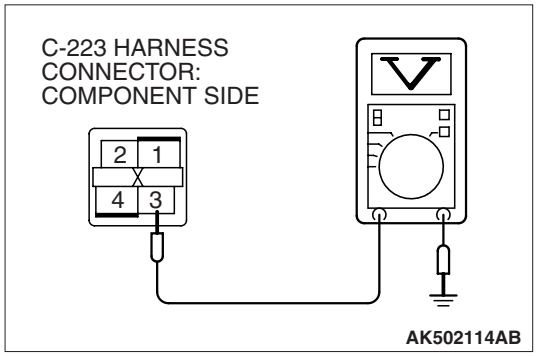

(3) Measure the voltage between terminal No. 3 and ground.
- Voltage should measure battery positive voltage.

(4) Turn the ignition switch to the "LOCK" (OFF) position.

Q: Is battery positive voltage (approximately 12 volts) present?

YES : Go to Step 9.

NO : Check harness connector C-211 at the intermediate connector for damage, and repair or replace as required. Refer to, GROUP 00E, Harness Connector Inspection P.00E-2. If the intermediate connector is in good condition, repair the harness wire between ignition switch connector C-208 (terminal No. 2) and fuel pump relay 1 connector C-223 (terminal No. 3) because of open circuit. Then confirm that the malfunction symptom is eliminated.

STEP 9. Check for continuity at fuel pump relay 1 harness side connector C-223.

(1) Disconnect the connector C-223 and measure at the harness side.

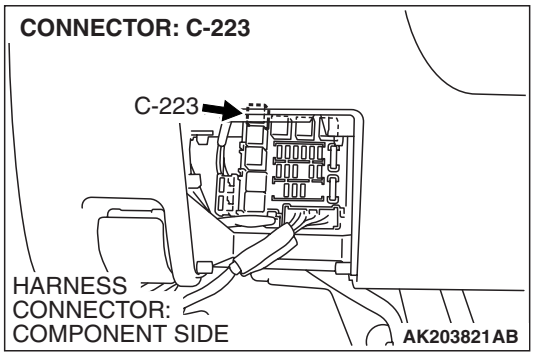

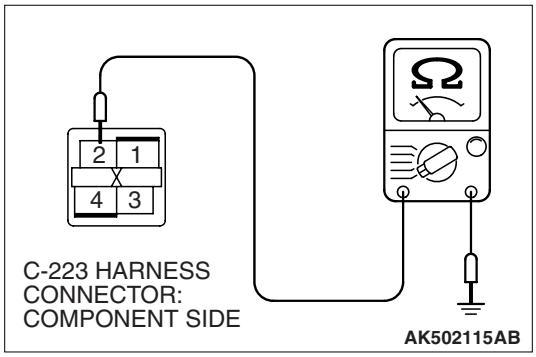

(2) Check for the continuity between terminal No. 2 and ground.
- Should be less than 2 ohms.

Q: Does continuity exist?

YES : Go to Step 10.

NO : Check harness connector C-214 at the intermediate connector for damage, and repair or replace as required. Refer to GROUP 00E, Harness Connector Inspection P.00E-2. If the intermediate connector is in good condition, repair the harness wire between fuel pump relay 1 connector C-223 (terminal No. 2) and ground because of open circuit. Then confirm that the malfunction symptom is eliminated.

STEP 10. Measure the power supply voltage at fuel pump relay 2 harness side connector C-221.

(1) Disconnect the connector C-221 and measure at the harness side.

(2) Turn the ignition switch to the "ON" position.

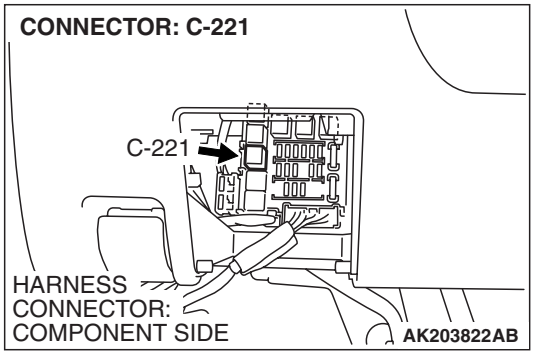

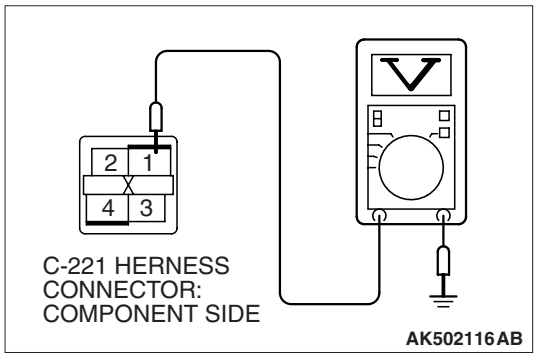

(3) Measure the voltage between terminal No. 1 and ground.
- Voltage should measure battery positive voltage.

Q: Is battery positive voltage (approximately 12 volts) present?

YES : Go to Step 11.

NO : Repair the harness wire between fuel pump relay 1 connector C-223 (terminal No. 1) and fuel pump relay 2 connector C-221 (terminal No. 1) because of an open circuit. Then confirm that the malfunction symptom is eliminated.

STEP 11. Measure the power supply voltage at fuel pump relay 2 harness side connector C-221.

(1) Disconnect the connector C-221 and measure at the harness side.

(2) Turn the ignition switch to the "ON" position.

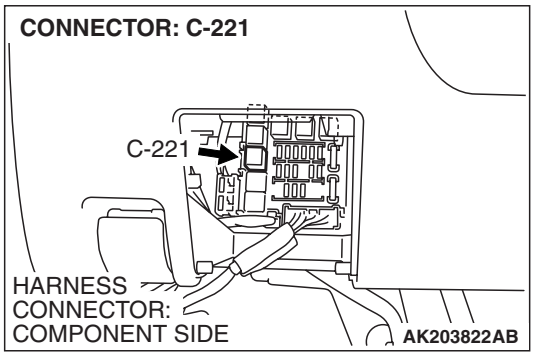

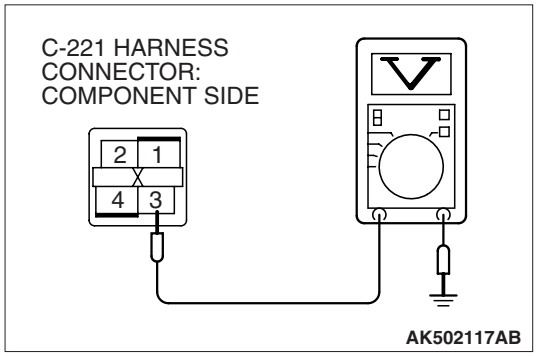

(3) Measure the voltage between terminal No. 3 and ground.
- Voltage should measure battery positive voltage.

(4) Turn the ignition switch to the "LOCK" (OFF) position.

Q: Is battery positive voltage (approximately 12 volts) present?

YES : Go to Step 12.

NO : Check harness connector C-211 at the intermediate connector for damage, and repair or replace as required. Refer to GROUP 00E, Harness Connector Inspection P.00E-2. If the intermediate connector is in good condition, repair the harness wire between ignition switch connector C-208 (terminal No. 2) and fuel pump relay 2 connector C-221 (terminal No. 3) because of open circuit. Then confirm that the malfunction symptom is eliminated.

STEP 12. Measure the power supply voltage at fuel pump resistor harness side connector B-121.

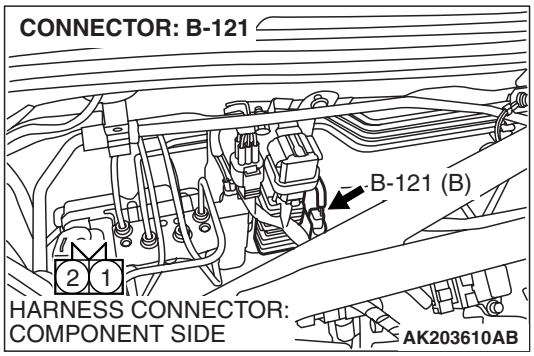

(1) Disconnect the connector B-121 and measure the harness side.
(2) Turn the ignition switch to the "ON" position.

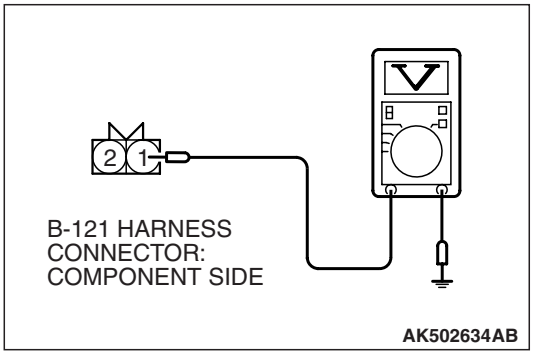

(3) Measure the voltage between terminal No.1 and ground.
- Voltage should measure battery positive voltage.

(4) Turn the ignition switch to the "LOCK" (OFF) position.

Q: Is battery positive voltage (approximately 12 volts) present?

YES : Go to Step 13.

NO : Check harness connectors C-123 and C-214 at the intermediate connector for damage, and repair or replace as required. Refer to GROUP 00E, Harness Connector Inspection P.00E-2. If the intermediate connectors are in good condition, repair the harness wire between fuel pump relay 2 connector C-221 (terminal No. 4) and fuel pump resistor connector B-121 (terminal No.1) because of open circuit. Then confirm that the malfunction symptom is eliminated.

STEP 13. Check connector D-12 at fuel pump for damage.

Q: Is the connector in good condition?

YES : Go to Step 14.

NO : Repair or replace it. Refer to GROUP 00E, Harness Connector Inspection P.00E-2. Then confirm that the malfunction symptom is eliminated.

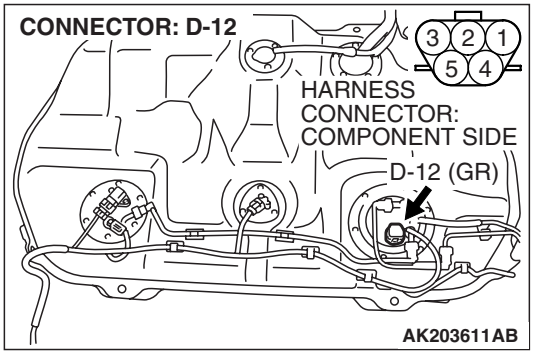

STEP 14. Check the fuel pump operation.

(1) Disconnect fuel pump connector D-12.

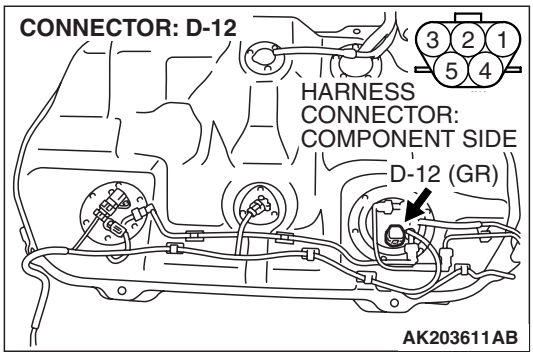

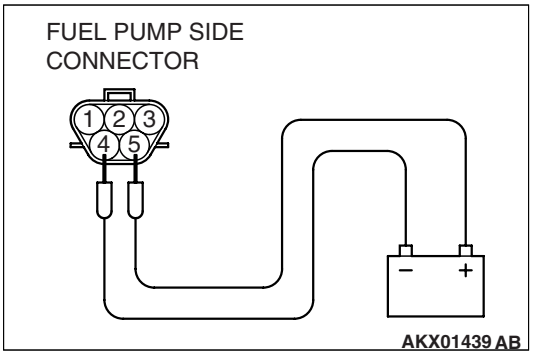

(2) Use jumper wires to connect fuel pump connector terminal No. 5 to the positive battery terminal and terminal No. 4 to the negative battery terminal.
- An operating sound of the fuel pump should be heard.

Q: Is the fuel pump operating properly?

YES : Go to Step 15.

NO : Replace the fuel pump. Then confirm that the malfunction symptom is eliminated.

STEP 15. Check for continuity at fuel pump harness side connector D-12.

(1) Disconnect the connector D-12 and measure at the harness side.

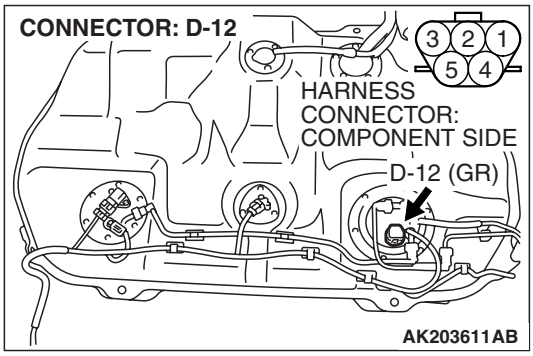

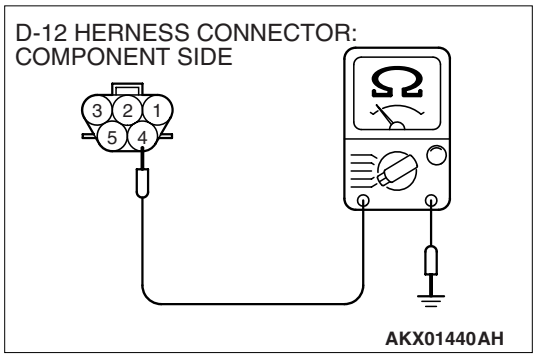

(2) Check for the continuity between terminal No. 4 and ground.
- Should be less than 2 ohms.

Q: Does continuity exist?

YES : Go to Step 16.

NO : Check harness connector D-34 at the intermediate connector for damage, and repair or replace as required. Refer to, GROUP 00E, Harness Connector Inspection P.00E-2. If the intermediate connector is in good condition, repair the harness wire damage between fuel pump connector D-12 (terminal No. 4) and ground because of an open circuit or harness damage. Then confirm that the malfunction symptom is eliminated.

STEP 16. Check for open circuit and short circuit to ground and harness damage between fuel pump resistor connector B-121 (terminal No. 2) and fuel pump connector D-12 (terminal No. 5).

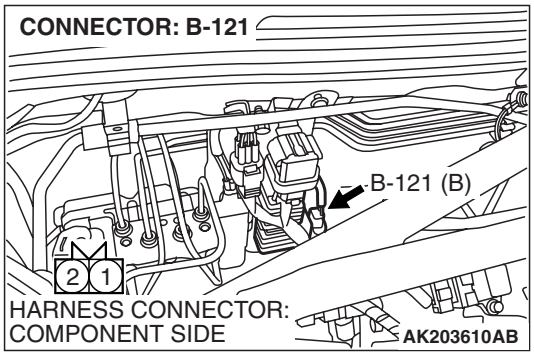

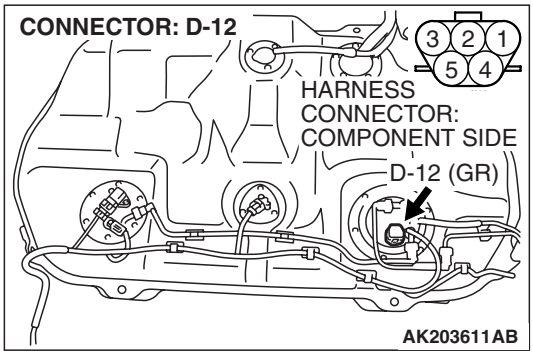

NOTE: Check the harness after checking the intermediate connectors C-123, C-113 and D-33. If any of the intermediate connectors are damaged, repair or replace them. After to GROUP 00E, Harness Connector Inspection P.00E-2. Then check that the malfunction is eliminated.

Q: Is the harness wire in good condition?

YES : Go to Step 17.

NO : Repair it. Then confirm that the malfunction symptom is eliminated.

STEP 17. Check connector C-121 at ECM for damage.

Q: Is the connector in good condition?

YES : Go to Step 18.

NO : Repair or replace it. Refer to GROUP 00E, Harness Connector Inspection P.00E-2. Then confirm that the malfunction symptom is eliminated.

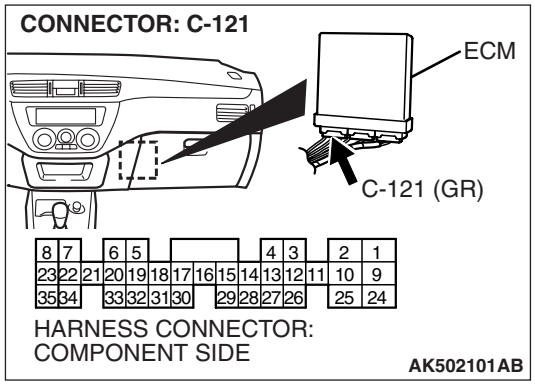

STEP 18. Measure the power supply voltage at ECM connector C-121.

(1) Disconnect the connector C-121 and measure at the harness side.

(2) Turn the ignition switch to the "ON" position.

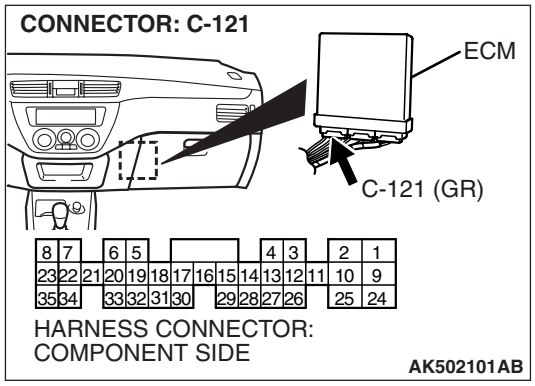

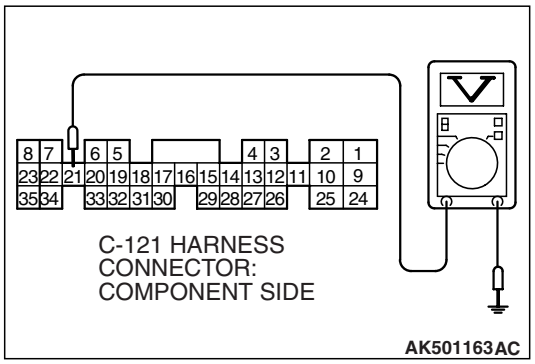

(3) Measure the voltage between terminal No. 21 and ground.
- Voltage should measure battery positive voltage.

(4) Turn the ignition switch to the "LOCK" (OFF) position.

Q: Is battery positive voltage (approximately 12 volts) present?

YES : Replace the ECM. Then confirm that the malfunction symptom is eliminated.

NO : Check harness connectors C-123 and C-214 at the intermediate connector for damage, and repair or replace as required. Refer to, GROUP 00E, Harness Connector Inspection P.00E-2. If the intermediate connectors are in good condition, repair the harness wire between fuel pump relay 2 connector C-221 (terminal No. 2) and ECM connector C-121 (terminal No. 21) because of open circuit. Then confirm that the malfunction symptom is eliminated.

STEP 19. Check connector B-120 at fuel pump relay 3 for damage.

Q: Is the connector in good condition?

YES : Go to Step 20.

NO : Repair or replace it. Refer to GROUP 00E, Harness Connector Inspection P.00E-2. Then confirm that the malfunction symptom is eliminated.

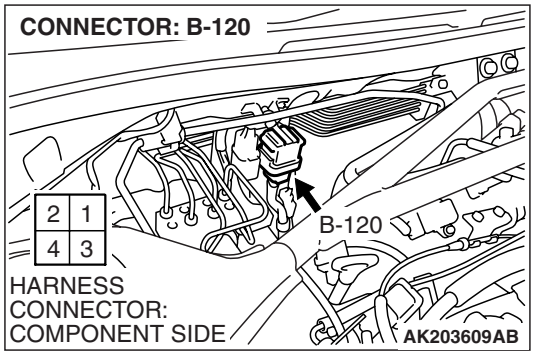

STEP 20. Check the fuel pump relay 3.

(1) Remove the fuel pump relay.

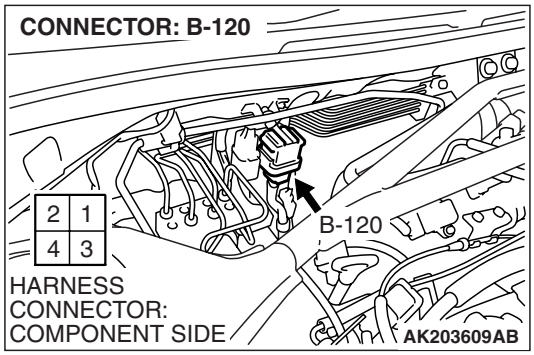

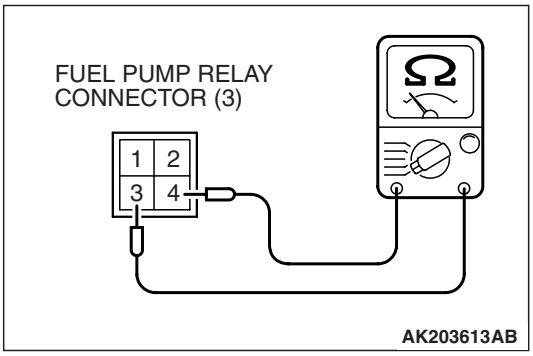

(2) Check for continuity between the fuel pump relay terminals No. 3 and No. 4.
- There should be continuity. (approximately 70 ohms)

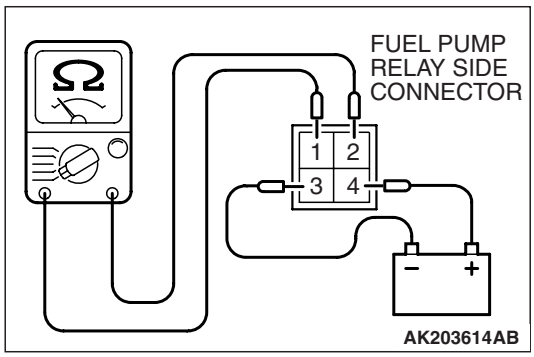

(3) Use jumper wires to connect fuel pump relay terminal No. 4 to the positive battery terminal and terminal No. 3 to the negative battery terminal.
(4) Check for continuity between the fuel pump relay terminals No. 1 and No. 2 while connecting and disconnecting the jumper wire at the negative battery terminal.
- Should be less than 2 ohms. (Negative battery terminal disconnected)
- Should be open loop. (Negative battery terminal connected)

(5) Install the fuel pump relay.

Q: Is the resistance normal?

YES : Go to Step 21.

NO : Replace the fuel pump relay 3. Then confirm that the malfunction symptom is eliminated.

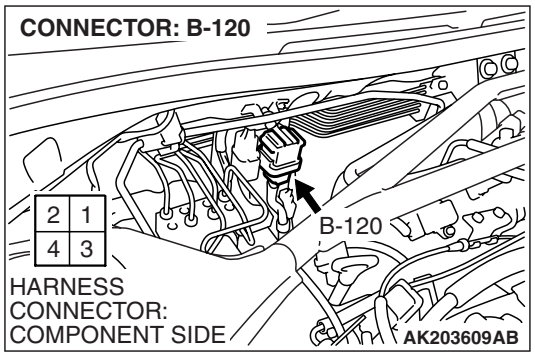

STEP 21. Measure the power supply voltage at fuel pump relay 3 harness side connector B-120.

(1) Disconnect the connector B-120 and measure at the harness side.

(2) Turn the ignition switch to the "ON" position.

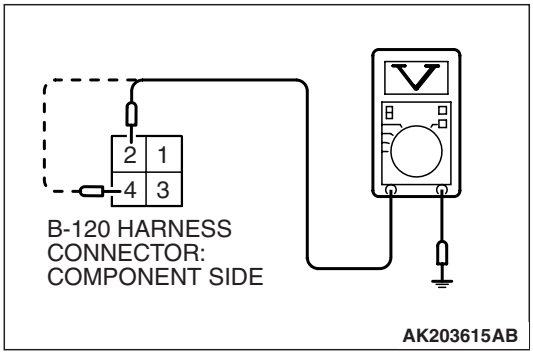

(3) Measure the voltage between terminals No. 2, No. 4 and ground.
- Voltage should measure battery positive voltage.

(4) Turn the ignition switch to the "LOCK" (OFF) position.

Q: Is battery positive voltage (approximately 12 volts) present?

YES : Go to Step 22.

NO : Check harness connectors C-123 and C-214 at the intermediate connector for damage, and repair or replace as required. Refer to, GROUP 00E, Harness Connector Inspection P.00E-2. If the intermediate connectors are in good condition, repair the harness wire between fuel pump relay 2 connector C-221 (terminal No. 4) and fuel pump relay 3 connector B-120 (terminals No. 2, No. 4) because of open circuit. Then confirm that the malfunction symptom is eliminated.

STEP 22. Check for open circuit and short circuit to ground and harness damage between fuel pump relay 3 connector B-120 (terminal No. 1) and fuel pump connector D-12 (terminal No. 5).

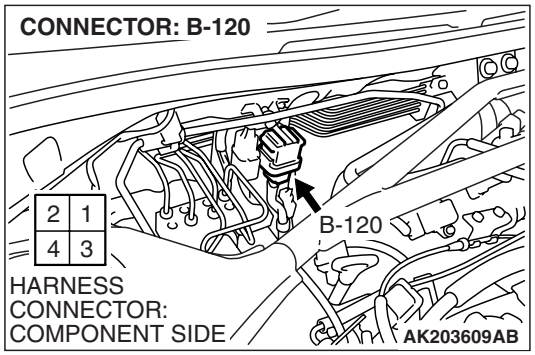

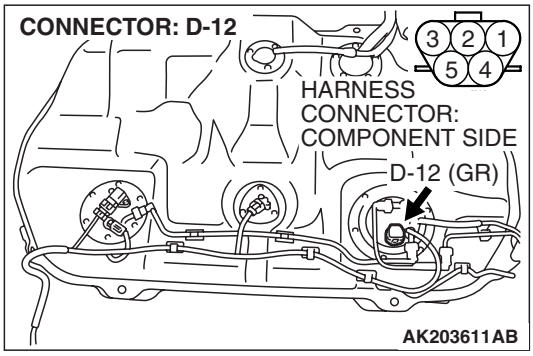

NOTE: Check harness after checking intermediate connectors C-123, C-113 and D-33. If any of the intermediate connectors are damaged, repair or replace them. After to GROUP 00E, Harness Connector Inspection P.00E-2. Then check that the malfunction is eliminated.

Q: Is the harness wire in good condition?

YES : Go to Step 13.

NO : Repair it. Then confirm that the malfunction symptom is eliminated.

STEP 23. Check connector C-119 at ECM for damage.

Q: Is the connector in good condition?

YES : Go to Step 24.

NO : Repair or replace it. Refer to GROUP 00E, Harness Connector Inspection P.00E-2. Then confirm that the malfunction symptom is eliminated.

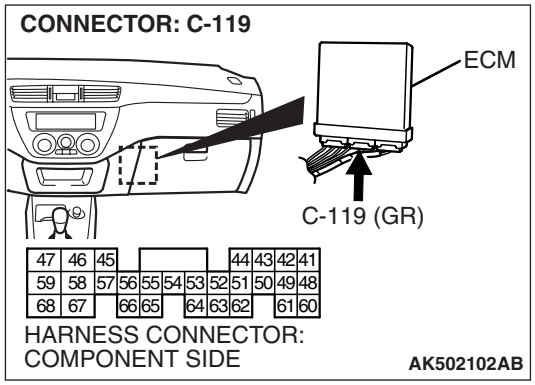

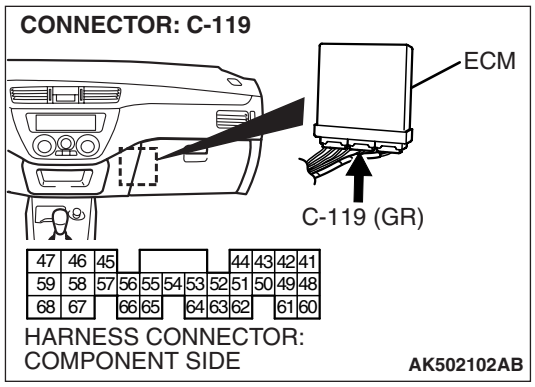

STEP 24. Measure the power supply voltage at ECM connector C-119.

(1) Disconnect the connector C-119 and measure at the harness side.

(2) Turn the ignition switch to the "ON" position.

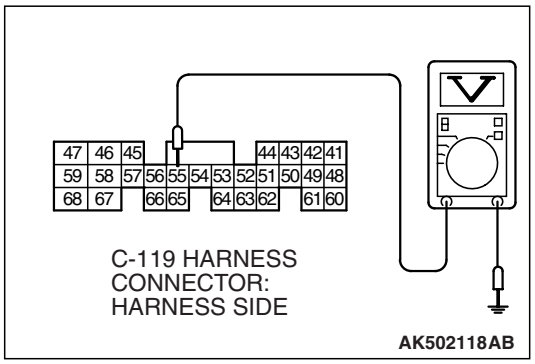

(3) Measure the voltage between terminal No. 55 and ground.
- Voltage should measure battery positive voltage.

(4) Turn the ignition switch to the "LOCK" (OFF) position.

Q: Is battery positive voltage (approximately 12 volts) present?

YES : Replace the ECM. Then confirm that the malfunction symptom is eliminated.

NO : Repair harness wire between fuel pump relay 3 connector B-120 (terminal No. 3) and ECM connector C-119 (terminal No. 55) because of an open circuit. Then confirm that the malfunction symptom is eliminated.

INSPECTION PROCEDURE 32: Ignition Switch-ST System

Ignition Switch-ST Circuit

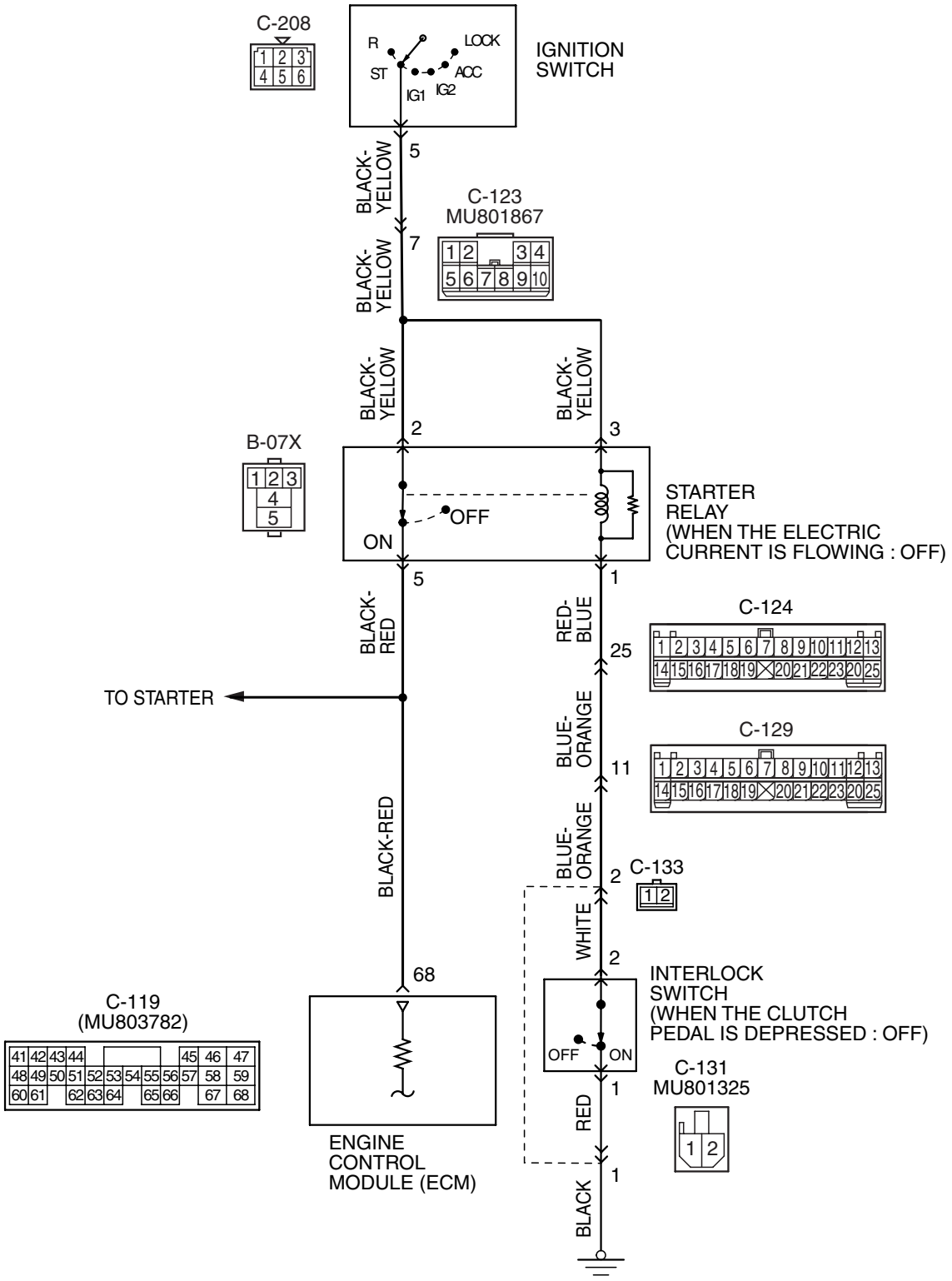

AK502097

TSB Revision

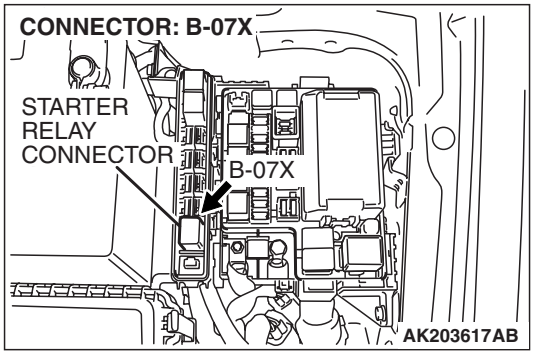

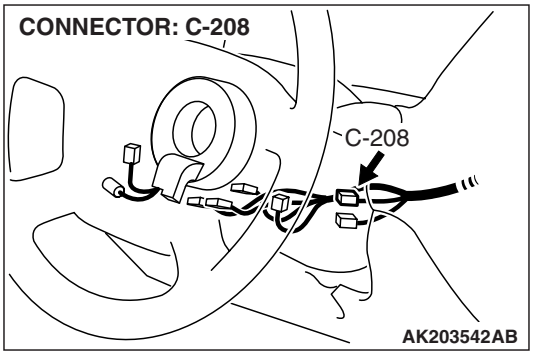

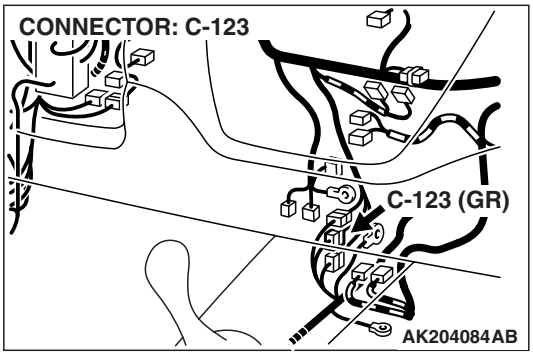

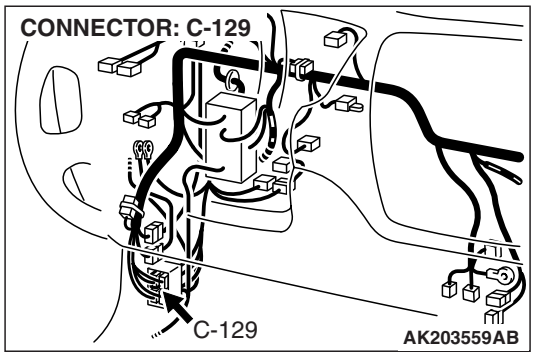

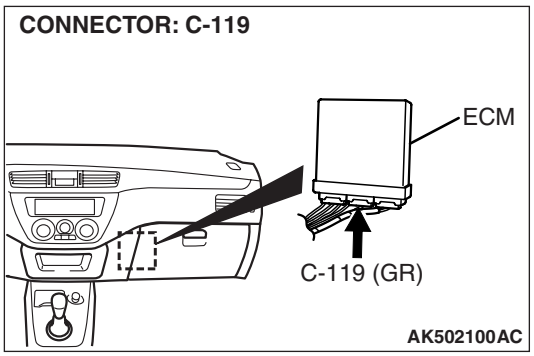

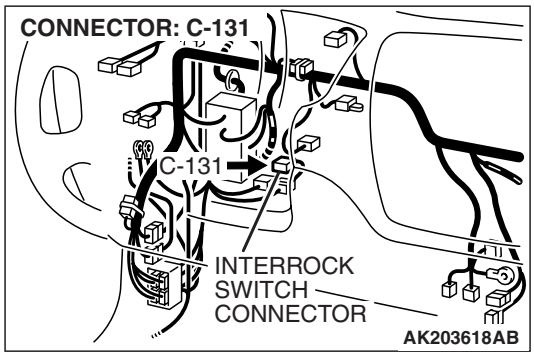

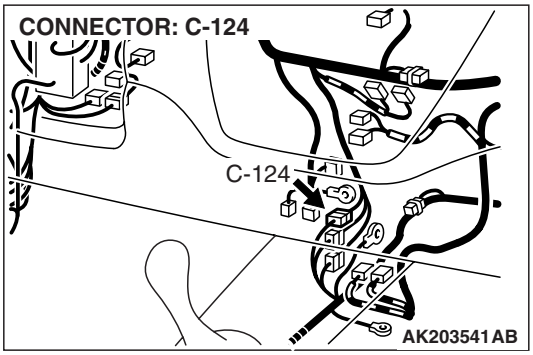

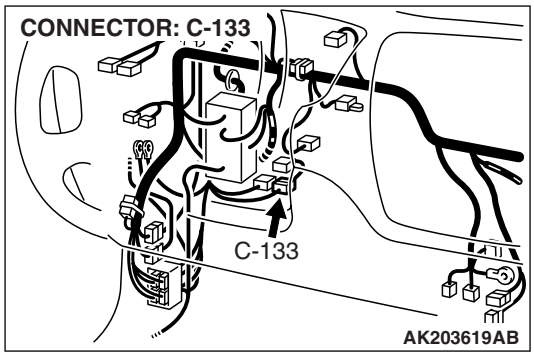

CIRCUIT OPERATION

- The battery positive voltage is supplied to the ECM (terminal No. 68) via the starter relay during engine cranking. With this, the ECM detects that the engine is being cranked.

TROUBLESHOOTING HINTS (The most likely causes for this case:)

- Malfunction of the ignition switch.
- Malfunction of the starter relay.
- Improper connector contact, open circuit or short-circuited harness wire.
- Malfunction of the ECM.

DIAGNOSIS

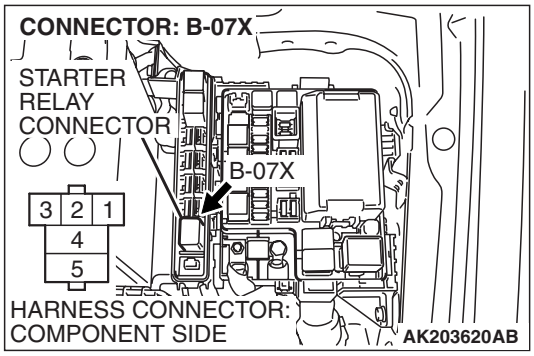

STEP 1. Check connector B-07X at starter relay for damage.

Q: Is the connector in good condition?

YES : Go to Step 2.

NO : Repair or replace it. Refer to GROUP 00E, Harness Connector Inspection P.00E-2. Then confirm that the malfunction symptom is eliminated.

STEP 2. Check the starter relay.

Refer to GROUP 16, Starting system –On-vehicle Service – Starter relay check P.16-23.

Q: Are there any abnormalities?

YES : Go to Step 3.

NO : Repair or replace it. Then confirm that the malfunction symptom is eliminated.

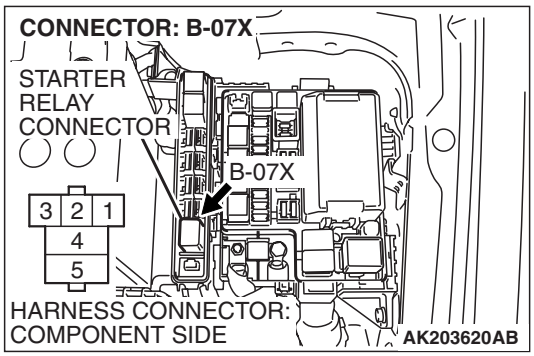

STEP 3. Measure the power supply voltage at starter relay connector B-07X.

(1) Disconnect the connector B-07X and measure at the harness side.

(2) Turn the ignition switch to the "START" position.

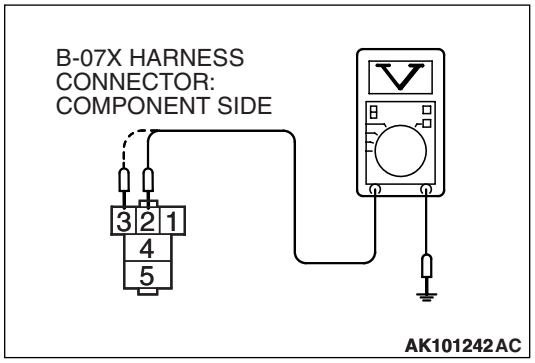

(3) Measure the voltage between terminals No. 2, No. 3 and ground.

- Voltage should measure battery positive voltage.

(4) Turn the ignition switch to the "LOCK" (OFF) position.

Q: Is battery positive voltage (approximately 12 volts) present?

YES : Go to Step 4.

NO : Check connector C-123 at intermediate connector for damage, and repair or replace as required. Refer to GROUP 00E, Harness Connector Inspection P.00E-2. If intermediate connector is in good condition, repair harness wire between ignition switch connector C-208 (terminal No. 5) and starter relay connector B-07X (terminals No. 2, No. 3) because of open circuit. Then confirm that the malfunction symptom is eliminated.

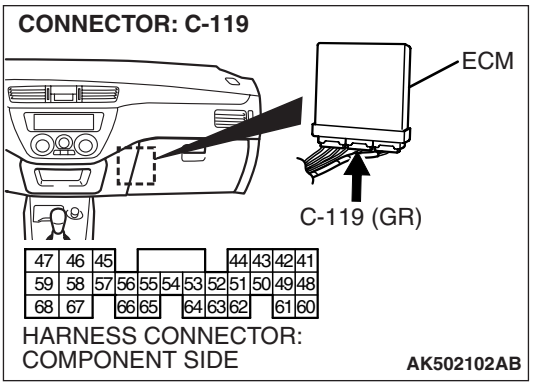

STEP 4. Check connector C-119 at ECM for damage.

Q: Is the connector in good condition?

YES : Go to Step 5.

NO : Repair or replace it. Refer to GROUP 00E, Harness Connector Inspection P.00E-2. Then confirm that the malfunction symptom is eliminated.

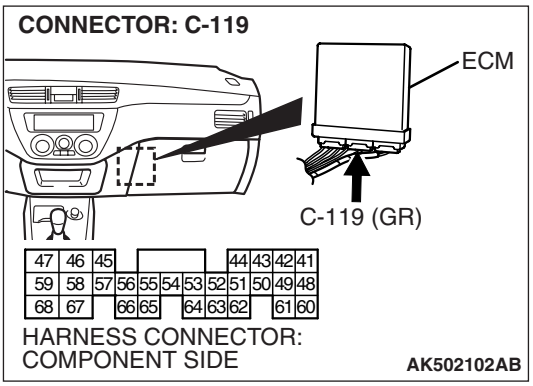

STEP 5. Measure the power supply voltage at ECM connector C-119.

(1) Disconnect the connector C-119 and measure at the harness side.

(2) Turn the ignition switch to the "START" position.

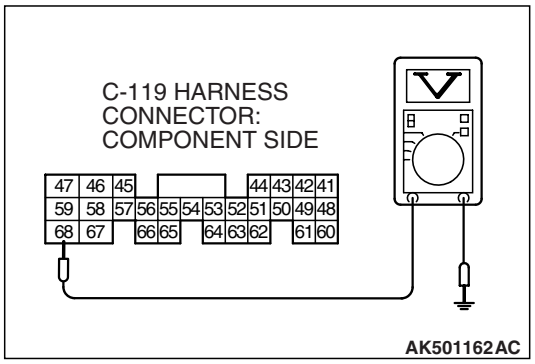

(3) Measure the voltage between terminal No. 68 and ground.
- Voltage should be battery positive voltage.

(4) Turn the ignition switch to the "LOCK" (OFF) position.

Q: Is battery positive voltage (approximately 12 volts) present?

YES : Go to Step 6.

NO : Refer to GROUP 00E, Harness Connector Inspection P.00E-2. If intermediate connector is in good condition, repair harness wire between starter relay connector B-07X (terminal No. 5) and ECM connector C-119 (terminal No. 68) because of open circuit. Then confirm that the malfunction symptom is eliminated.

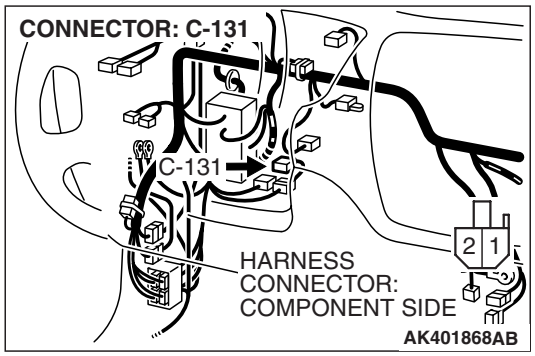

STEP 6. Check connector C-131 at interlock switch for damage.

Q: Is the connector in good condition?

YES : Go to Step 7.

NO : Repair or replace it. Refer to GROUP 00E, Harness Connector Inspection P.00E-2. Then confirm that the malfunction symptom is eliminated.

STEP 7. Check the interlock switch.

Refer to GROUP 21A, On-vehicle Service –Interlock switch check and adjustment P.21A-8.

Q: Are there any abnormalities?

YES : Go to Step 8.

NO : Repair or replace it. Then confirm that the malfunction symptom is eliminated.

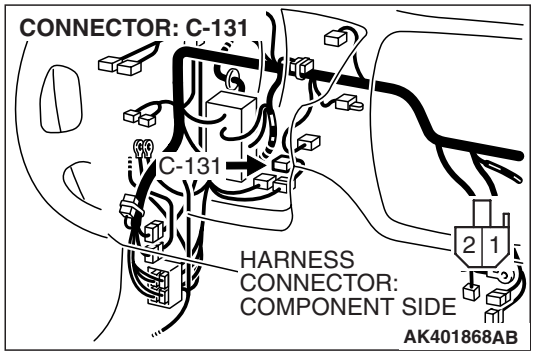

STEP 8. Measure the power supply voltage at interlock switch connector C-131.

(1) Disconnect the connector C-131 and measure at the harness side.

(2) Turn the ignition switch to the "START" position.

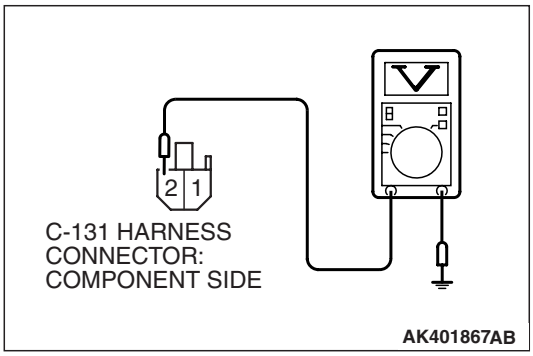

(3) Measure the voltage between terminal No. 2 and ground.
- Voltage should measure battery positive voltage.

(4) Turn the ignition switch to the "LOCK" (OFF) position.

Q: Is battery positive voltage (approximately 12 volts) present?

YES : Go to Step 9.

NO : Check connectors C-124, C-129 and C-133 at the intermediate connector for damage, and repair or replace as required. Refer to GROUP 00E, Harness Connector Inspection P.00E-2. If the intermediate connectors are in good condition, repair harness wire between starter relay connector B-07X (terminal No. 1) and interlock switch connector C-131 (terminal No. 2) because of open circuit. Then confirm that the malfunction symptom is eliminated.

STEP 9. Check for continuity at interlock switch harness side connector C-131.

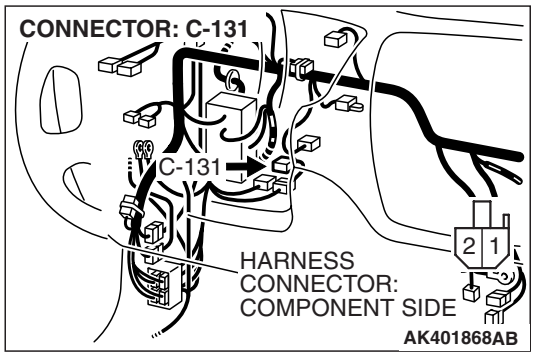

(1) Disconnect the connector C-131 and measure at the harness side.

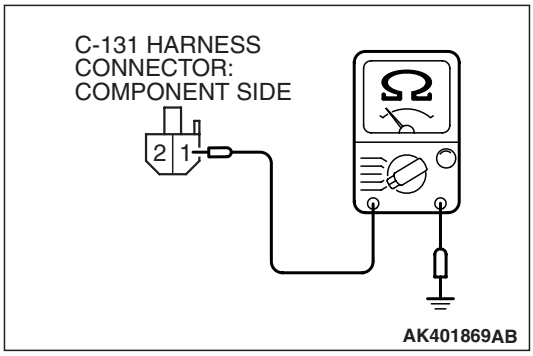

(2) Check for the continuity between terminal No. 1 and ground.
- Should be less than 2 ohms.

Q: Does continuity exist?

YES : Replace the ECM. Then confirm that the malfunction symptom is eliminated.

NO : Check connector C-133 at the intermediate connector for damage, and repair or replace as required. Refer to GROUP 00E, Harness Connector Inspection P.00E-2. If the intermediate connector is in good condition, repair the harness wire between the interlock switch connector C-131 (terminal No. 1) and ground because of an open circuit or harness damage. Then confirm that the malfunction symptom is eliminated.

INSPECTION PROCEDURE 33: Ignition Circuit System

Ignition Circuit

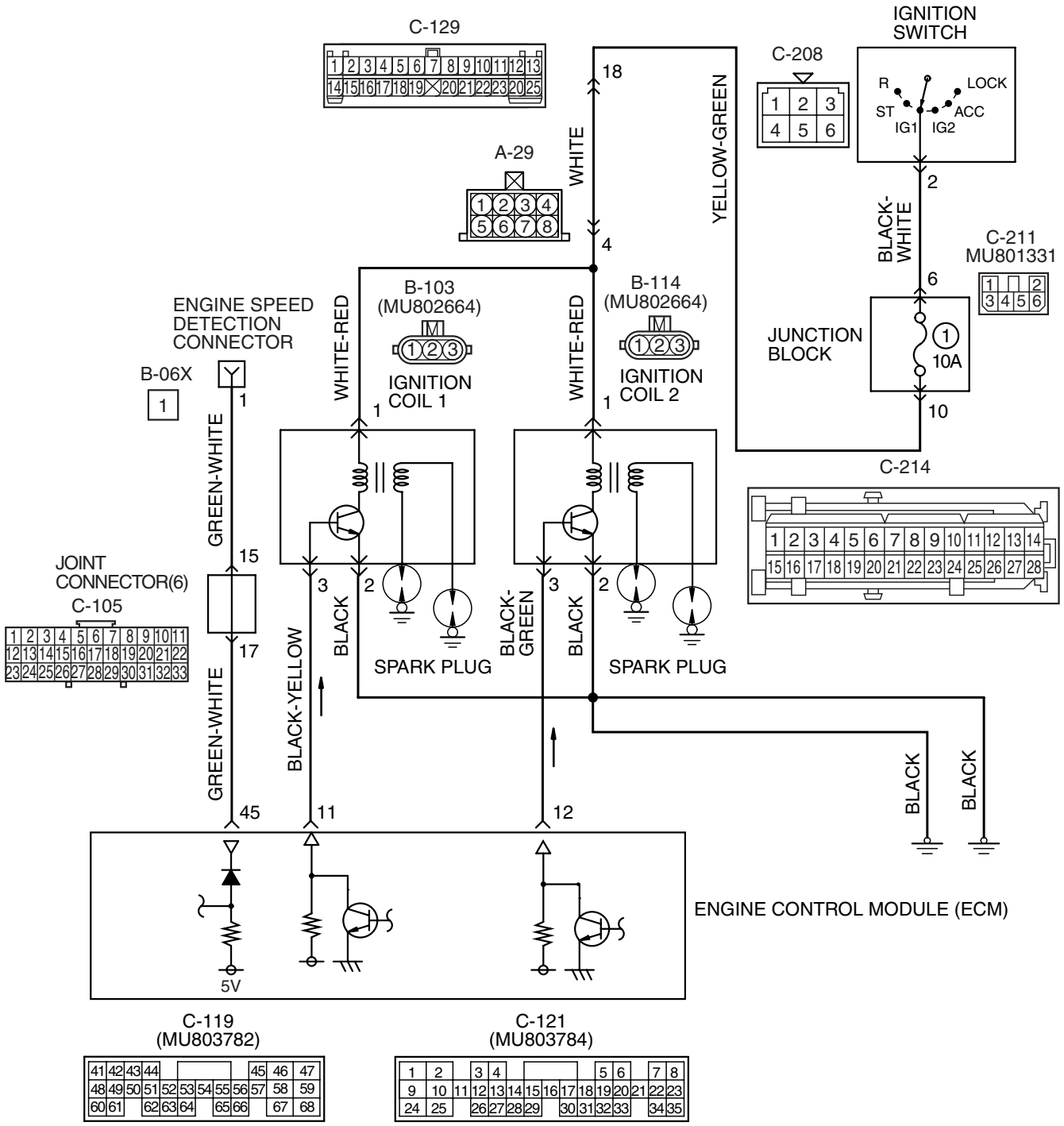

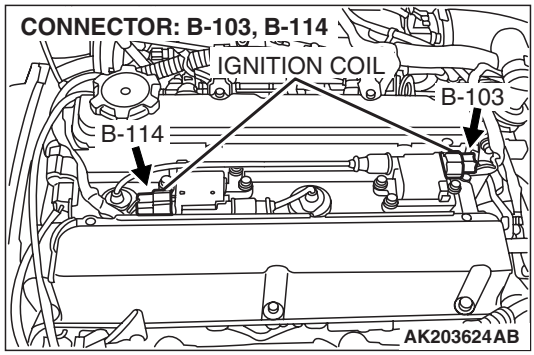
CONNECTOR: B-103, B-114
IGNITION COIL
B-103
B-114
AK203624AB

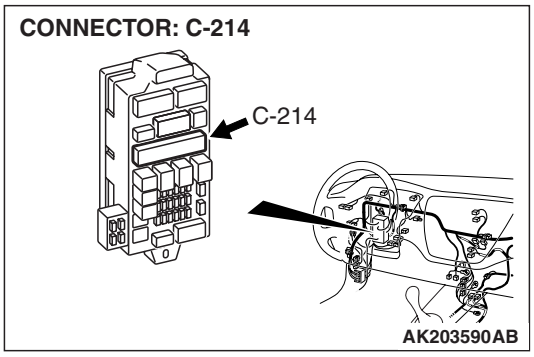
CONNECTOR: C-214
C-214
AK203590AB

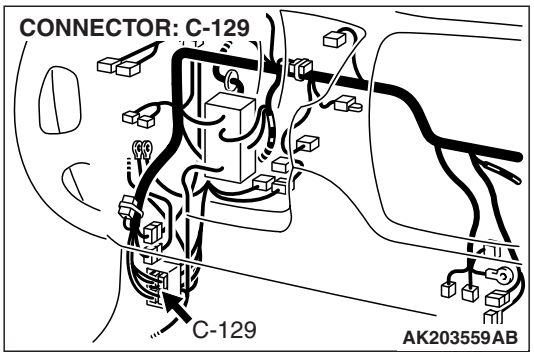
CONNECTOR: C-129
C-129
AK203559AB

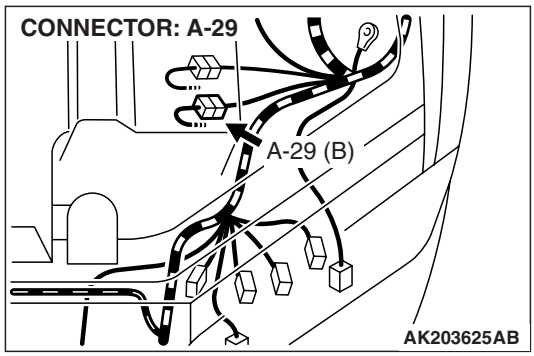
CONNECTOR: A-29
A-29 (B)
AK203625AB

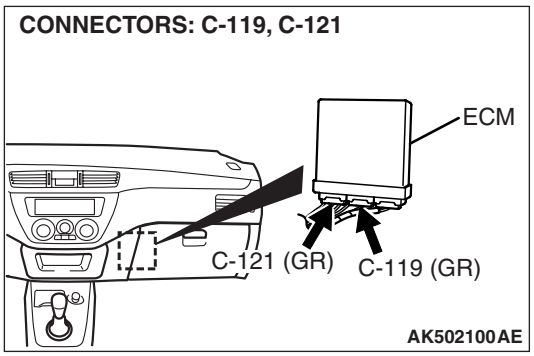
CONNECTORS: C-119, C-121
ECM
C-121 (GR)
C-119 (GR)
AK502100AE

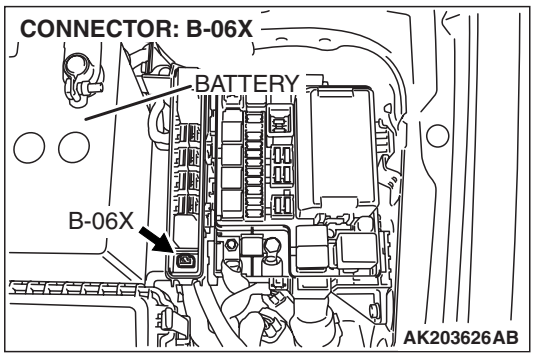
CONNECTOR: B-06X
BATTERY
B-06X
AK203626AB

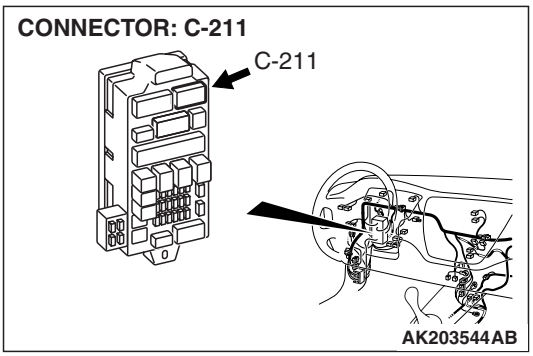
CONNECTOR: C-211
C-211
AK203544AB

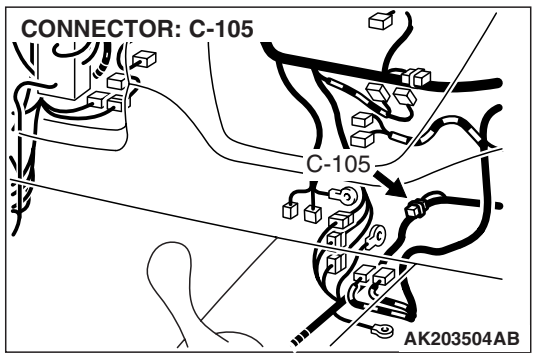
CONNECTOR: C-105
C-105
AK203504AB

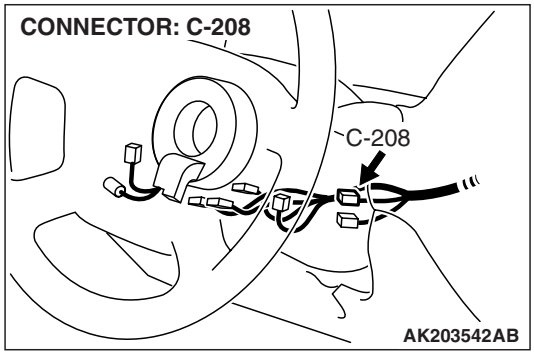
CONNECTOR: C-208
C-208
AK203542AB

CIRCUIT OPERATION

- The ignition coil is energized by Battery positive voltage from the ignition switch.
- When the ECM turns off its internal power transistor, battery positive voltage is applied to the ignition power transistor (terminal No. 3) inside the ignition coil, causing the ignition power transistor to be turned on.
- If the ignition power transistor is turned on, the primary circuit of the ignition coil is energized by grounding the ignition coil through terminal No. 2, causing the primary current to flow to the ignition coil.

TROUBLESHOOTING HINTS (The most likely causes for this case:)

- Malfunction of the ignition coil.
- Malfunction of the ignition power transistor.
- Improper connector contact, open circuit or short-circuited harness wire.
- Malfunction of the ECM.

DIAGNOSIS

STEP 1. Check the ignition coil.
Refer to GROUP 16, Ignition System –On-vehicle service –Ignition Coil Check P.16-33.

Q: Are there any abnormalities?

YES : Go to Step 2.
NO : Replace the ignition coil. Then confirm that the malfunction symptom is eliminated.

STEP 2. Check harness connectors B-103, B-114 at ignition coil for damage.
Q: Is the harness connector in good condition?

YES : Go to Step 3.
NO : Repair or replace it. Refer to GROUP 00E, Harness Connector Inspection P.00E-2. Then confirm that the malfunction symptom is eliminated.

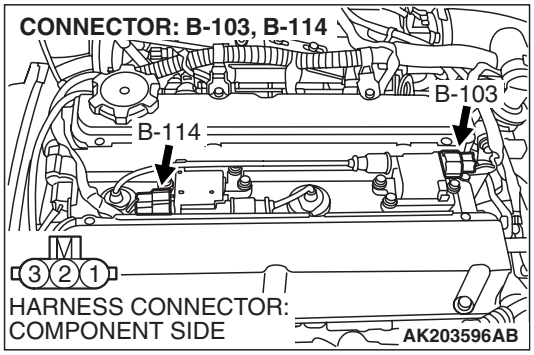

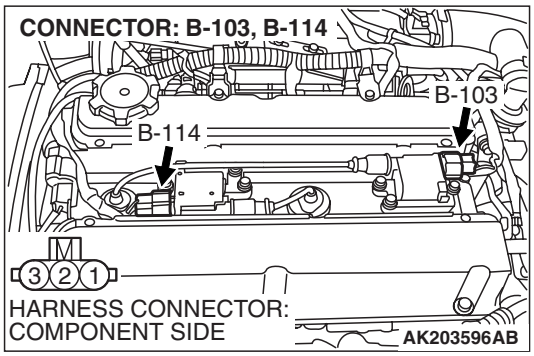

STEP 3. Measure the power supply voltage at ignition coil connectors B-103, B-114.

(1) Disconnect the connectors B-103, B-114 and measure at the harness side.

(2) Turn the ignition switch to the "ON" position.

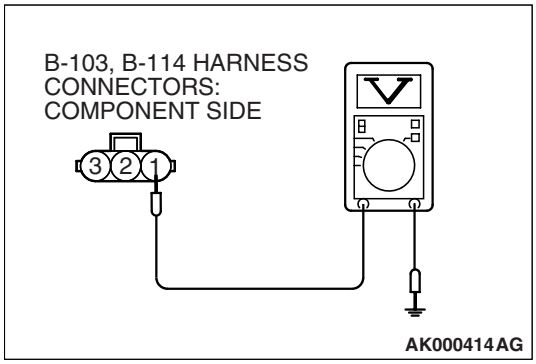

(3) Measure the voltage between terminal No. 1 and ground.
- Voltage should be battery positive voltage.

(4) Turn the ignition switch to the "LOCK" (OFF) position.

Q: Is battery positive voltage (approximately 12 volts) present?

YES : Go to Step 4.

NO : Check the connectors A-29, C-129, C-211 and C-214 at the intermediate connectors for damage, and repair or replace as required. Refer to GROUP 00E, Harness Connector Inspection P.00E-2. If the intermediate connectors are in good condition, repair harness wire between ignition switch connector C-208 (terminal No. 2) and ignition coil connectors B-103, B-114 (terminal No. 1) because of an open circuit. Then confirm that the malfunction symptom is eliminated.

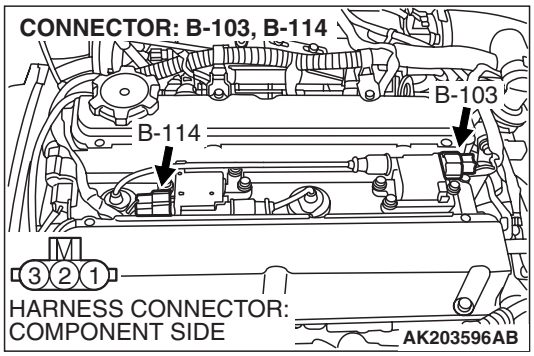

STEP 4. Check the circuit at ignition coil harness side connectors B-103, B-114.

(1) Disconnect the connectors B-103, B-114 and measure at the harness side.
(2) Engine cranking.

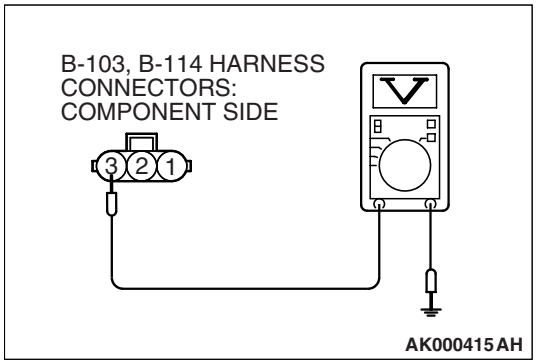

(3) Measure the voltage between terminal No. 3 and ground.
- Voltage should be 0.3 and 3.0 volts.

(4) Turn the ignition switch to the "LOCK" (OFF) position.

Q: Is the measured voltage between 0.3 and 3.0 volts?

YES : Go to Step 7.
NO : Go to Step 5.

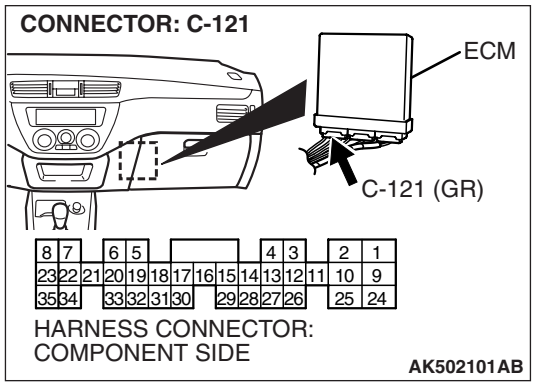

STEP 5. Check connector C-121 at ECM for damage.

Q: Is the connector in good condition?

YES : Go to Step 6.
NO : Repair or replace it. Refer to GROUP 00E, Harness Connector Inspection P.00E-2. Then confirm that the malfunction symptom is eliminated.

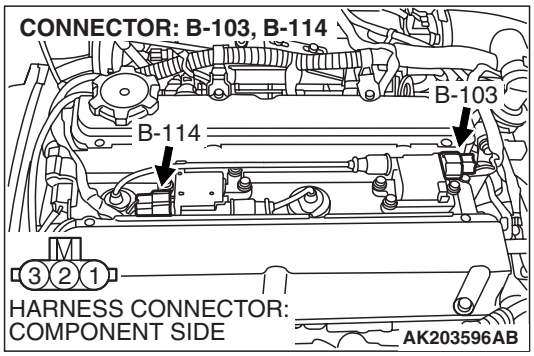

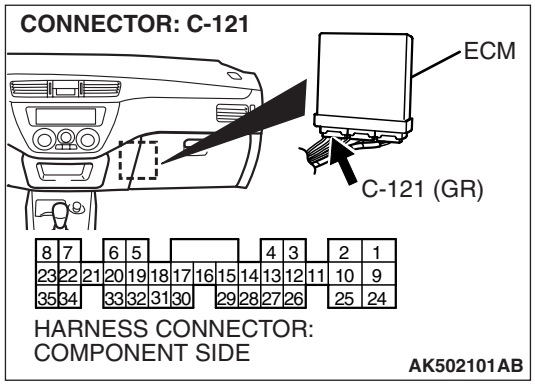

STEP 6. Check for open circuit and short circuit to ground between ignition coil connector and ECM connector.

a. Check the harness wire between ignition coil connector B-103 (terminal No. 3) and ECM connector C-121 (terminal No. 11) at ignition coil 1.

b. Check the harness wire between ignition coil connector B-114 (terminal No. 3) and ECM connector C-121 (terminal No. 12) at ignition coil 2.

Q: Is the harness wire in good condition?

YES : Replace the ECM. Then confirm that the malfunction symptom is eliminated.

NO : Repair it. Then confirm that the malfunction symptom is eliminated.

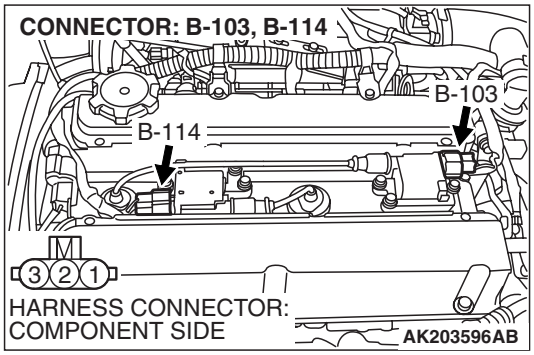

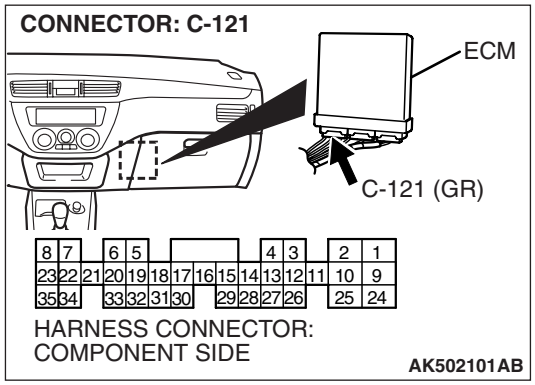

STEP 7. Check for harness damage between ignition coil connector and ECM connector.

a. Check the harness wire between ignition coil connector B-103 (terminal No. 3) and ECM connector C-121 (terminal No. 11) at ignition coil 1.

b. Check the harness wire between ignition coil connector B-114 (terminal No. 3) and ECM connector C-121 (terminal No. 12) at ignition coil 2.

Q: Is the harness wire in good condition?

YES : Go to Step 8.

NO : Repair it. Then confirm that the malfunction symptom is eliminated.

STEP 8. Check for continuity at ignition coil harness side connectors B-103, B-114.

(1) Disconnect the connectors B-103, B-114 and measure at the harness side.

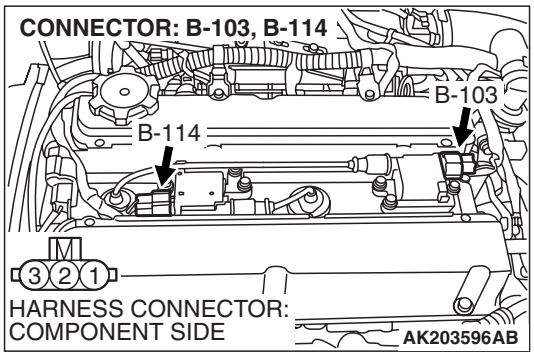

(2) Check for continuity between terminal No. 2 and ground.
- Should be less than 2 ohms.

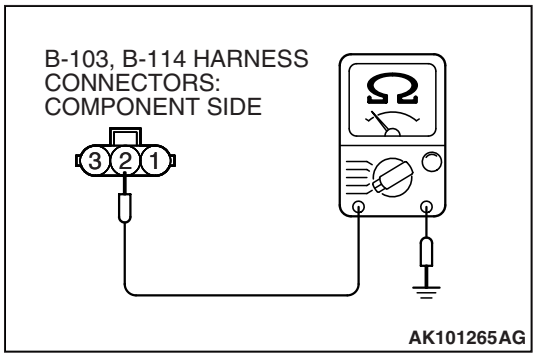

Q: Does continuity exist?

YES : Go to Step 9.

NO : Repair the harness wire between ignition coil connectors B-103, B-114 (terminal No. 2) and ground because of open circuit or harness damage. Then confirm that the malfunction symptom is eliminated.

STEP 9. Check connector B-06X at engine speed detection and connector C-119 at ECM for damage.

Q: Is the connector in good condition?

YES : Go to Step 10.

NO : Repair or replace it. Refer to GROUP 00E, Harness Connector Inspection P.00E-2. Then confirm that the malfunction symptom is eliminated.

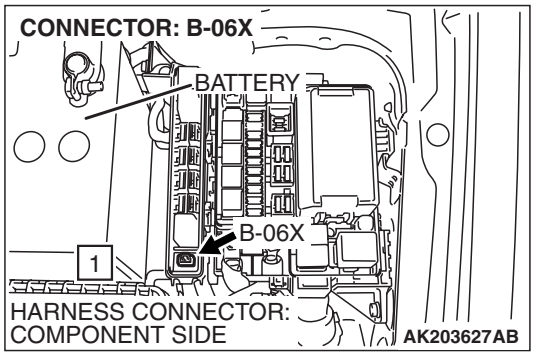

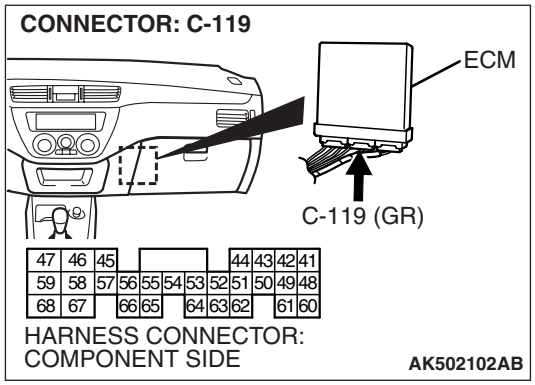

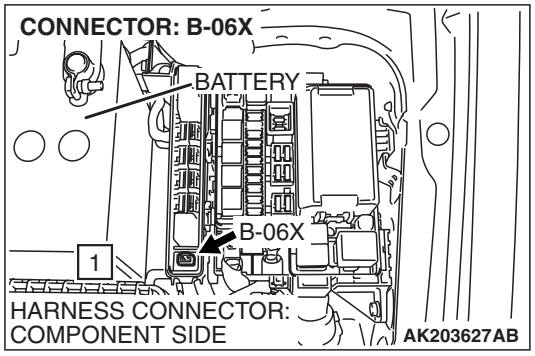

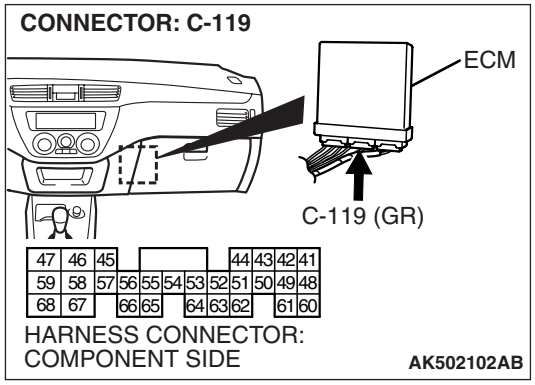

STEP 10. Check for open circuit and short circuit to ground and harness damage between engine speed detection connector B-06X (terminal No. 1) and ECM connector C-119 (terminal No. 45).

Q: Is the harness wire in good condition?

YES : Check the connector C-105 at intermediate connectors for damage, and repair or replace as required. Refer to GROUP 00E, Harness Connector Inspection P.00E-2. If intermediate connector is in good condition, replace the ECM. Then confirm that the malfunction symptom is eliminated.

NO : Repair it. Then confirm that the malfunction symptom is eliminated.

INSPECTION PROCEDURE 34: A/C System

A/C Circuit

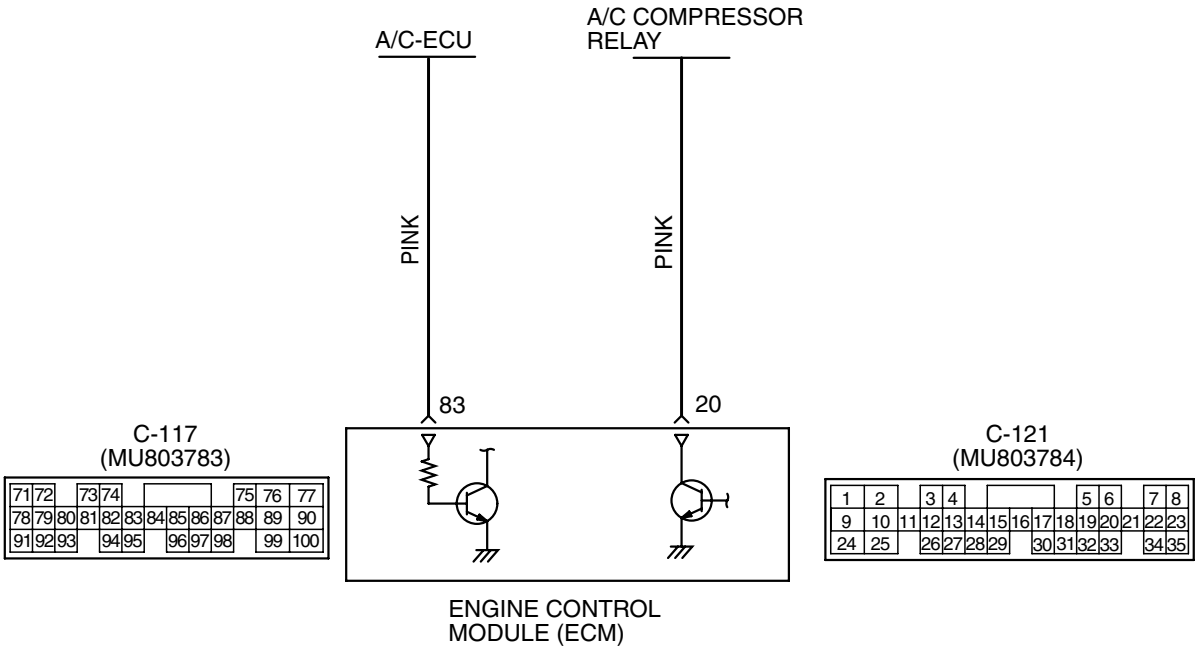

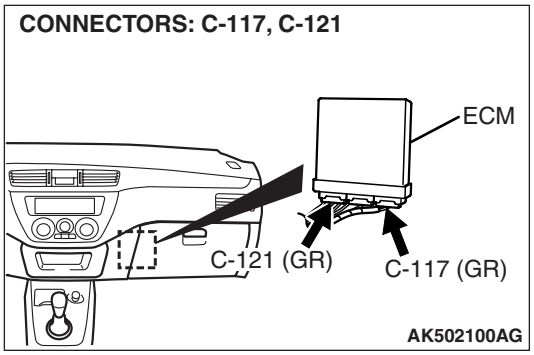

COMMENT

- When the A/C is "ON", the battery positive voltage is applied on the ECM (terminal No. 83) from the automatic compressor controller.
  When battery positive voltage is applied to the ECM, the ECM turns "ON" the power transistor in the ECM. The ECM delays A/C engagement momentarily while it increases idle r/min. Then the A/C compressor clutch relay coil will be energized.
  With this, the A/C compressor clutch relay turns "ON", and the A/C compressor clutch operates.

TROUBLESHOOTING HINTS (The most likely causes for this case:)

- Malfunction of the A/C control system.
- Malfunction of the A/C switch.
- Improper connector contact, open circuit or short-circuited harness wire.
- Malfunction of the ECM.

DIAGNOSIS

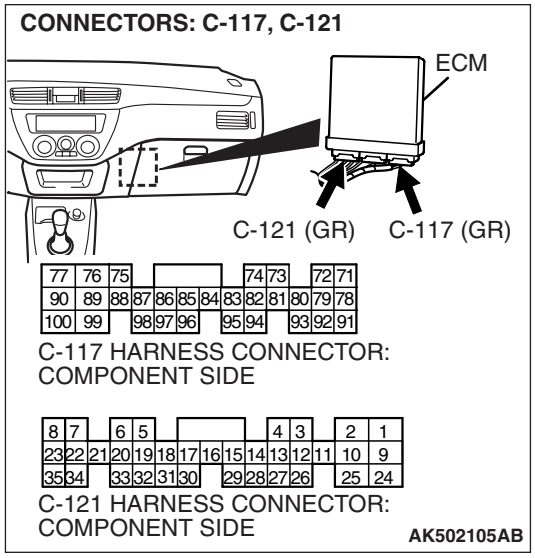

STEP 1. Check connector C-117, C-121 at ECM for damage.

Q: Is the connector in good condition?

YES : Go to Step 2.

NO : Repair or replace it. Refer to GROUP 00E, Harness Connector Inspection P.00E-2. Then confirm that the malfunction symptom is eliminated.

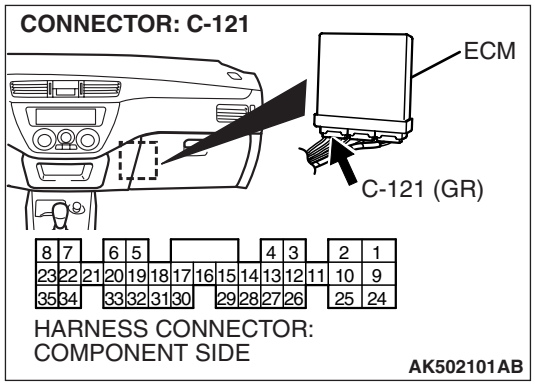

STEP 2. Check the circuit at ECM connector C-121.

(1) Disconnect the connectors C-121 and measure at the harness side.

(2) Turn the ignition switch to the "ON" position.

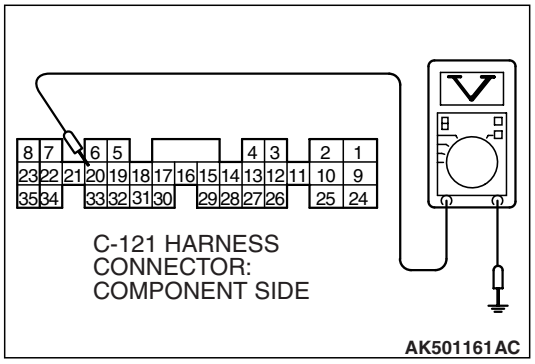

(3) Measure the voltage between terminal No. 20 and ground.
- Voltage should measure battery positive voltage.

(4) Using a jumper wire, connect terminal No. 20 to ground.
- A/C compressor relay should turn "ON".

(5) Turn the ignition switch to the "LOCK" (OFF) position.

Q: Is the voltage and A/C compressor relay condition normal?

YES : Go to Step 3.

NO : Refer to GROUP 55, Heater, Air Conditioning And Ventilation –Manual A/C Diagnosis –Symptom Chart P.55-5.

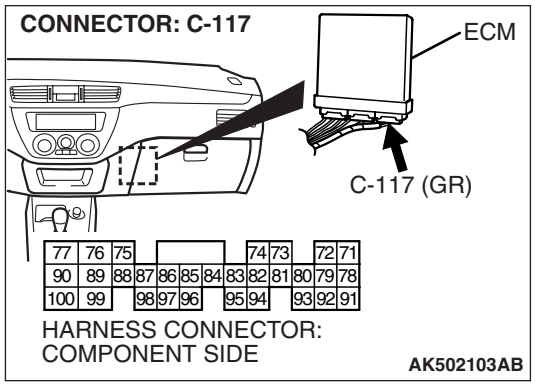

STEP 3. Check the circuit at ECM connector C-117.

(1) Disconnect the connectors C-117 and measure at the harness side.

(2) Turn the ignition switch to the "ON" position.

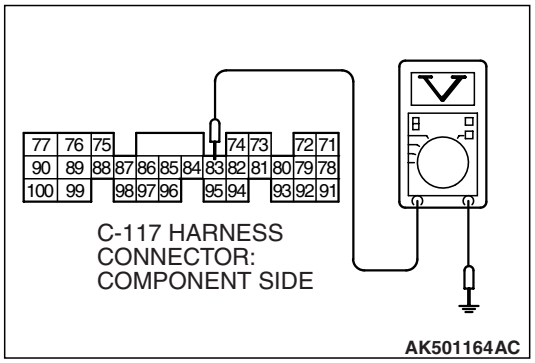

(3) Measure the voltage between terminal No. 83 and ground.
- Voltage should measure 1 volt or less when the A/C switch is "OFF".
- Voltage should measure battery positive voltage when the A/C switch is "ON".

(4) Turn the ignition switch to the "LOCK" (OFF) position.

Q: Is the measured voltage within the specified range?

YES : Replace the ECM. Then confirm that the malfunction symptom is eliminated.

NO : Refer to GROUP 55, Heater, Air Conditioning And Ventilation –Manual A/C Diagnosis –Symptom Chart P.55-5.

DATA LIST REFERENCE TABLE

M1131152002139

⚠ CAUTION

- **When shifting the select lever to D range, the brakes should be applied so that the vehicle does not move forward.**
- **Driving tests always need two persons: one driver and one observer.**

*NOTE: *1: If the idle speed is lower than the standard value on a very cold engine [approximately – 20°C (-4°F)] even when the IAC motor is fully opened, the air volume limiter built in the throttle body could be defective.*

*NOTE: *2: In a new vehicle [driven approximately 500 km (311 mile) or less], the step of the stepper motor is sometimes 30 steps greater than the standard value.*

*NOTE: *3: The injector drive time represents the time when the cranking speed is at 250 r/min or below when the power supply voltage is 11 volts.*

*NOTE: *4: In a new vehicle [driven approximately 500 km (311 mile) or less], the injector drive time is sometimes 10% longer than the standard time.*

*NOTE: *5: In a new vehicle [driven approximately 500 km (311 mile) or less], the volume airflow sensor output frequency is sometimes 10% higher than the standard frequency.*

*NOTE: *6: GST items. [Data list items consist of M.U.T.-III items and GST items. GST items can be accessed through the use of a general scan tool (GST). When scan tool MB991958 (M.U.T.-III sub assembly) is used, M.U.T.-III items appear alphabetically; then, GST items appear alphabetically. The black and white characters of the GST items are inverted from the M.U.T.-III items.]*

M.U.T.-III SCAN TOOL DISPLAY	ITEM NO.	INSPECTION ITEM	INSPECTION REQUIREMENT		NORMAL CONDITION	INSPECTION PROCEDURE NO.	REFERENCE PAGE
A/C RELAY	49	A/C compressor clutch relay	• Engine: idling • A/C switch: "OFF"		OFF	Procedure No. 34	P.13A-821
			• Engine: idling • A/C switch: "ON"	A/C compressor clutch is not operating	OFF		
				A/C compressor clutch is operating	ON		
A/C SWITCH	28	A/C switch	• Engine: idling • A/C switch: "OFF"		OFF	Procedure No. 34	P.13A-821
			• Engine: idling • A/C switch: "ON"	A/C compressor clutch is not operating	OFF		
				A/C compressor clutch is operating	ON		
BARO SENSOR	25	Barometric pressure sensor	Ignition switch: "ON"	At altitude of 0 m (0 ft)	101 kPa (29.8 in. Hg)	Code No. P0069, P2228, P2229	P.13A-77, P.13A-667, P.13A-679
				At altitude of 600 m (1,969 ft)	95 kPa (28.1 in. Hg)		
				At altitude of 1,200 m (3,937 ft)	88 kPa (26.0 in. Hg)		
				At altitude of 1,800 m (5,906 ft)	81 kPa (23.9 in. Hg)		
BATT VOLTAGE	16	Power supply voltage	Ignition switch: "ON"		Battery positive voltage	Procedure No. 30	P.13A-780

M.U.T.-III SCAN TOOL DISPLAY	ITEM NO.	INSPECTION ITEM	INSPECTION REQUIREMENT		NORMAL CONDITION	INSPECTION PROCEDURE NO.	REFERENCE PAGE
CKP SENSOR	22	Crankshaft position sensor *1	• Engine: cranking • Tachometer: connected		Engine speeds displayed on the scan tool and tachometer are identical	Code No. P0335	P.13A-361
			Engine: idling	Engine coolant temperature is –20° C (–4° F)	1,300 – 1,500 r/min		
				Engine coolant temperature is 0° C (32° F)	1,300 – 1,500 r/min		
				Engine coolant temperature is 20° C (68° F)	1,300 – 1,500 r/min		
				Engine coolant temperature is 40° C (104° F)	1,150 – 1,350 r/min		
				Engine coolant temperature is 80° C (176° F)	750 – 950 r/min		
CRANK. SIGNAL	18	Cranking signal (ignition switch-ST)	Ignition switch: "ON"	Engine: stopped	OFF	Procedure No. 32	P.13A-807
				Engine: cranking	ON		

M.U.T.-III SCAN TOOL DISPLAY	ITEM NO.	INSPECTION ITEM	INSPECTION REQUIREMENT		NORMAL CONDITION	INSPECTION PROCEDURE NO.	REFERENCE PAGE
ECT SENSOR	21	Engine coolant temperature sensor	Ignition switch: "ON" or with engine running	Engine coolant temperature is – 20° C (–4° F)	–20° C (–4° F)	Code No. P0116, P0117, P0118	P.13A-157, P.13A-167, P.13A-172
				Engine coolant temperature is 0° C (32° F)	0° C (32° F)		
				Engine coolant temperature is 20° C (68° F)	20° C (68° F)		
				Engine coolant temperature is 40° C (104° F)	40° C (104° F)		
				Engine coolant temperature is 80° C (176° F)	80° C (176° F)		

M.U.T.-III SCAN TOOL DISPLAY	ITEM NO.	INSPECTION ITEM	INSPECTION REQUIREMENT		NORMAL CONDITION	INSPECTION PROCEDURE NO.	REFERENCE PAGE
ECT SENSOR	21*6	Engine coolant temperature sensor	Ignition switch: "ON" or with engine running	Engine coolant temperature is –20° C (– 4° F)	–20° C (4° F)	Code No. P0116, P0117, P0118	P.13A-157, P.13A-167, P.13A-172
				Engine coolant temperature is 0° C (32° F)	0° C (32° F)		
				Engine coolant temperature is 20° C (68° F)	20° C (68° F)		
				Engine coolant temperature is 40° C (104° F)	40° C (104° F)		
				Engine coolant temperature is 80° C (176° F)	80° C (176° F)		
ENGINE LOAD	37	Engine load (volumetric efficiency)	• Engine coolant temperature : 80 – 95° C (176 – 203° F) • Lights and all accessories : "OFF" • Transaxle: neutral	Engine is idling	12 – 32%	–	–
				2,500 r/min	12 – 35%		
				Revving engine	Volumetric efficiency increases according to amount of revving.		
ENGINE LOAD	87*6	Calculated load value	• Engine: warming up	Engine is idling	15 – 35%	–	–
				2,500 r/min	15 – 35%		

M.U.T.-III SCAN TOOL DISPLAY	ITEM NO.	INSPECTION ITEM	INSPECTION REQUIREMENT		NORMAL CONDITION	INSPECTION PROCEDURE NO.	REFERENCE PAGE
ENGINE SPEED	22*6	Crankshaft position sensor *1	• Engine: cranking • Tachometer: connected		Engine speeds displayed on the scan tool and tachometer are identical.	Code No. P0335	P.13A-361
			Engine: idling	Engine coolant temperature is –20° C (–40° F)	1,300 – 1,500 r/min		
				Engine coolant temperature is 0° C (32° F)	1,300 – 1,500 r/min		
				Engine coolant temperature is 20° C (68° F)	1,300 – 1,500 r/min		
				Engine coolant temperature is 40° C (104° F)	1,150 – 1,350 r/min		
				Engine coolant temperature is 80° C (176° F)	750 – 950 r/min		
FUEL TEMP	4A	Fuel tank temperature sensor	• In cooled state • Ignition switch: "ON"		Approximately the same as the outdoor temperature	Code No. P0181, P0182, P0183	P.13A-299, P.13A-309, P.13A-315

M.U.T.-III SCAN TOOL DISPLAY	ITEM NO.	INSPECTION ITEM	INSPECTION REQUIREMENT		NORMAL CONDITION	INSPECTION PROCEDURE NO.	REFERENCE PAGE
HO2S BANK1 S1	11	Heated oxygen sensor (front)	Engine: Warming up (air/fuel mixture is made leaner when decelerating, and is made richer when revving.)	When at 4,000 r/min, engine is suddenly decelerated	200 mV or less → 600 – 1,000 mV (After several seconds have elapsed)	Code No. P0130, P0131, P0132, P0133, P0134	P.13A-216, P.13A-231, P.13A-238, P.13A-243, P.13A-249
				When engine is suddenly revved.	600 – 1,000 mV		
			Engine: Warming up (the heated oxygen sensor signal is used to check the air/fuel mixture ratio, and control condition is also checked by the ECM)	Engine is idling	Voltage changes repeatedly between 400 mV or less and 600 – 1,000 mV		
				2,500 r/min			
HO2S BANK1 S1	A1*6	Heated oxygen sensor (front)	Engine: Warming up (air/fuel mixture is made leaner when decelerating, and is made richer when revving.)	When at 4,000 r/min, engine is suddenly decelerated	0.2 V or less → 0.6 – 1 V (After several seconds have elapsed)	Code No. P0130, P0131, P0132, P0133, P0134	P.13A-216, P.13A-231, P.13A-238, P.13A-243, P.13A-249
				When engine is suddenly revved.	0.6 –1 V.		
			Engine: Warming up (the heated oxygen sensor signal is used to check the air/fuel mixture ratio, and control condition is also checked by the ECM)	Engine is idling	Voltage changes repeatedly between 0.4 V or less and 0.6 – 1 V.		
				2,500 r/min			

M.U.T.-III SCAN TOOL DISPLAY	ITEM NO.	INSPECTION ITEM	INSPECTION REQUIREMENT		NORMAL CONDITION	INSPECTION PROCEDURE NO.	REFERENCE PAGE
HO2S BANK1 S2	59	Heated oxygen sensor (rear)	Engine: warming up	Transaxle: 2nd range	600 – 1,000 mV	Code No. P0136, P0137, P0138, P0139, P0140	P.13A-258, P.13A-269, P.13A-275, P.13A-279, P.13A-282
				Drive with wide open throttle			
				Engine: 3,500 r/min or more			
HO2S BANK1 S2	A2*6	Heated oxygen sensor (rear)	Engine: warming up	Transaxle: 2nd range	0.6 – 1 V	Code No. P0136, P0137, P0138, P0139, P0140	P.13A-258, P.13A-269, P.13A-275, P.13A-279, P.13A-282
				Drive with wide open throttle			
				Engine: 3,500 r/min or more			
IAC VALVE POS	45	Idle air control (stepper) position *2	• Engine coolant temperature : 80 – 95° C (176 – 203° F) • Lights, electric cooling fan and all accessories : "OFF" • Transaxle: neutral • Engine: idling (when A/C switch is "ON". A/C compressor should be operating)	A/C switch: "OFF"	2 – 25 STEP	–	–
				A/C switch: "OFF" → "ON"	Increases by 10 – 70 STEP	–	–

M.U.T.-III SCAN TOOL DISPLAY	ITEM NO.	INSPECTION ITEM	INSPECTION REQUIREMENT		NORMAL CONDITION	INSPECTION PROCEDURE NO.	REFERENCE PAGE
IAT SENSOR	13	Intake air temperature sensor	Ignition switch: "ON" or with engine running	Intake air temperature is –20° C (–4° F)	–20° C (–4° F)	Code No. P0111, P0112, P0113	P.13A-138, P.13A-145, P.13A-150
				Intake air temperature is 0° C (32° F)	0° C (32° F)		
				Intake air temperature is 20° C (68° F)	20° C (68° F)		
				Intake air temperature is 40° C (104° F)	40° C (104° F)		
				Intake air temperature is 80° C (176° F)	80° C (176° F)		
IAT SENSOR	13*6	Intake air temperature sensor	Ignition switch: "ON" or with engine running	Intake air temperature is –20° C (–4° F)	–20° C (–4° F)	Code No. P0111, P0112, P0113	P.13A-138, P.13A-145, P.13A-150
				Intake air temperature is 0° C (32° F)	0° C (32° F)		
				Intake air temperature is 20° C (68° F)	20° C (68° F)		
				Intake air temperature is 40° C (104° F)	40° C (104° F)		
				Intake air temperature is 80° C (176° F)	80° C (176° F)		
IG. TIMING ADV	44	Ignition coils and ignition power transistor	• Engine: warming up • Timing light is set (to check actual ignition timing)	Engine is idling	0 – 13° BTDC	–	–
				2,500 r/min	20 – 40° BTDC		

M.U.T.-III SCAN TOOL DISPLAY	ITEM NO.	INSPECTION ITEM	INSPECTION REQUIREMENT		NORMAL CONDITION	INSPECTION PROCEDURE NO.	REFERENCE PAGE
IG. TIMING ADV	44*6	Ignition coils and ignition power transistor	• Engine: warming up • Timing light is set (to check actual ignition timing)	Engine is idling	0 – 13 deg	–	–
				2,500 r/min	20 – 40 deg		
INJECTORS	41	Injectors*3	Engine: cranking	When engine coolant temperature is 0° C (32° F)	25 – 37 ms	–	–
				When engine coolant temperature is 20° C (68° F)	15 – 22 ms		
				When engine coolant temperature is 80° C (176° F)	4.2 – 6.3 ms		
		Injectors*4	• Engine coolant temperature : 80 – 95° C (176 – 203° F) • Lights, electric cooling fan and all accessories : "OFF" • Transaxle: neutral	Engine is idling	1.5 – 2.7 ms		
				2,500 r/min	1.2 – 2.4 ms		
				When engine is suddenly revved	Increases		
LONG TRIM B1	81*6	Long-term fuel trim	Engine: warming up, 2,500 r/min without any load (during closed loop)		–12.5 to 12.5%	Code No. P0171, P0172	P.13A-285, P.13A-293

M.U.T.-III SCAN TOOL DISPLAY	ITEM NO.	INSPECTION ITEM	INSPECTION REQUIREMENT		NORMAL CONDITION	INSPECTION PROCEDURE NO.	REFERENCE PAGE
MAP SENSOR	95	Manifold absolute pressure sensor	• Engine coolant temperature : 80 – 90° C (176 – 203° F) • Lights, electric cooling fan and all accessories : "OFF" • Transaxle : Neutral • Ignition switch : ON	Engine stopped [At altitude of 0 m (0 ft.)]	101 kPa (29.8 in.Hg)	Code No. P0106, P0107, P0108	P.13A-107, P.13A-116, P.13A-129
				Engine stopped [At altitude of 600 m (1,969 ft.)]	95 kPa (28.1 in.Hg)		
				Engine stopped [At altitude of 1,200 m (39,737 ft.)]	88 kPa (26.0 in.Hg)		
				Engine stopped [At altitude of 1,800 m (5,906 ft)]	81 kPa (23.9 in.Hg)		
				Engine : Idling	31 – 45 kPa (9.1 – 13.2 in.Hg)		
				When engine is suddenly raced	Manifold pressure varies		

M.U.T.-III SCAN TOOL DISPLAY	ITEM NO.	INSPECTION ITEM	INSPECTION REQUIREMENT		NORMAL CONDITION	INSPECTION PROCEDURE NO.	REFERENCE PAGE
MAP/MDP SNSR.	32*6	Manifold absolute pressure sensor	• Engine coolant temperature : 80 – 90° C (176 – 203° F) • Lights, electric cooling fan and all accessories : "OFF" • Transaxle : Neutral • Ignition switch: ON	Engine stopped [At altitude of 0 m (0 ft.)]	101 kPa (29.8 in.Hg	Code No. P0106, P0107, P0108	P.13A-107, P.13A-116, P.13A-129
				Engine stopped [At altitude of 600 m (1,969 ft.)]	95 kPa (28.1 in.Hg)		
				Engine stopped [At altitude of 1,200 m (39,737 ft.)]	88 kPa (26.0 in.Hg)		
				Engine stopped [At altitude of 1,800 m (5,906 ft)]	81 kPa (23.9 in.Hg)		
				Engine: Idling	31 – 45 kPa (9.1 – 13.2 in.Hg)		
				When engine is suddenly raced	Manifold pressure varies		
MIL DISTANCE	A9*6	MIL distance	Running distance in the malfunction indicator lamp (SERVICE ENGINE SOON) ON			–	–
PSP SWITCH	27	Power steering pressure switch	Engine: idling	Steering wheel stationary	OFF	Code No. P0551, P0554	P.13A-609, P.13A-620
				Steering wheel turning	ON		
SHORT TRIM B1	82*6	Short-term fuel trim	Engine: warming up, 2,500 r/min without any load (during closed loop)		–20 to 20%	Code No. P0171, P0172	P.13A-285, P.13A-293
SYS. STATUS B1	88*6	Fuel system status	Engine: warming up	2,500 r/min	Closed loop	–	–
				When engine is suddenly revved	Open loop – drive condition		
TANK PRS. SNSR	73	Fuel tank differential pressure sensor	• Ignition switch: "ON" • Fuel tank filler tube cap removal		–3.3 to 3.3 kPa (–0.97 to 0.97 in. Hg)	–	–

M.U.T.-III SCAN TOOL DISPLAY	ITEM NO.	INSPECTION ITEM	INSPECTION REQUIREMENT		NORMAL CONDITION	INSPECTION PROCEDURE NO.	REFERENCE PAGE
TP SENSOR	14	Throttle position sensor	Ignition switch: "ON"	Set to idle position	535 – 735 mV	Code No. P0121, P0122, P0123	P.13A-179, P.13A-189, P.13A-196
				Gradually open	Increases in proportion to throttle opening angle		
				Open fully	4,500 – 5,000 mV		
TP SENSOR	8A*6	Throttle position sensor	Ignition switch: "ON"	Set to idle position	0 –10%	Code No. P0121, P0122, P0123	P.13A-179, P.13A-189, P.13A-196
				Gradually open	Increases in proportion to throttle opening angle		
				Open fully	80 – 100%		
VAF SENSOR	12	Volume airflow sensor (mass airflow rate) *5	• Engine coolant temperature : 80 –95° C (176 – 203° F) • Lights, electric cooling fan and all accessories : "OFF" • Transaxle: neutral	Engine is idling	17 – 43 Hz	–	–
				2,500 r/min	40 – 100 Hz		
				Engine is revved	Frequency increases in response to revving		

M.U.T.-III SCAN TOOL DISPLAY	ITEM NO.	INSPECTION ITEM	INSPECTION REQUIREMENT		NORMAL CONDITION	INSPECTION PROCEDURE NO.	REFERENCE PAGE
VAF SENSOR	12*6	Volume airflow sensor (mass airflow rate) *5	• Engine coolant temperature : 80 – 95° C (176 – 203° F) • Lights, electric cooling fan and all accessories : "OFF" • Transaxle: neutral	Engine is idling	2 – 7 gm/s	–	–
				2,500 r/min	5 – 16 gm/s		
				Engine is revved	Airflow volume increases in response to revving		
VSS	24*6	Vehicle speed sensor	Drive at 40 km/h (25 mph)		Approximately 40 km/h (25 mph)	Code No. P0500	P.13A-572

ACTUATOR TEST REFERENCE TABLE

M1131152501034

MB991958 SCAN TOOL DISPLAY	ITEM NO.	INSPECTION ITEM	DRIVE CONTENTS	INSPECTION REQUIREMENT		NORMAL CONDITION	INSPECTION PROCEDURE NO.	REFERENCE PAGE
BASIC TIMING	17*	Basic ignition timing	Set to ignition timing adjustment mode	• Engine: idling • Connect timing light		5° BTDC	–	–
CONDEN. FAN. HI	37	Condenser fan Relay (HI)	Drive the condenser fan motor.	Ignition switch: "ON"		Fan motor operates at a high speed.	Procedure No. 29	P.13A-777
CONDEN. FAN. LO	38	Condenser fan Relay (LO)	Drive the condenser fan motor.	Ignition switch: "ON"		Fan motor operates at a low speed.		
EGR SOLENOID	10	EGR vacuum regulator solenoid valve	Solenoid valve turns from OFF to ON.	Ignition switch: "ON"		Clicks when solenoid valve is driven.	Code No. P0403	P.13A-406
EVAP PURGE SOL	08	Evaporative emission purge solenoid	Solenoid valve turns from OFF to ON.	Ignition switch: "ON"		Clicks when solenoid valve is driven.	Code No. P0443	P.13A-437
EVAP VENT SOL	29	Evaporative emission ventilation solenoid	Solenoid valve turns from OFF to ON.	Ignition switch: "ON"		Clicks when solenoid valve is driven.	Code No. P0446	P.13A-446
FUEL PRSS SOL	09	Fuel pressure solenoid	Solenoid valve turns from OFF to ON.	Ignition switch: "ON"		Clicks when solenoid valve is driven.	Code No. P0090	P.13A-82
FUEL PUMP	07	Fuel pump	Fuel pump operates and fuel is recirculated	Ignition switch: "ON"	Pinch the return hose with fingers to feel the pulse of the fuel being recirculated	Pulse is felt	Procedure No. 30	P.13A-780
					Listen near the fuel tank for the sound of fuel pump operation	Sound of operation is heard (fuel pump operates at a low speed)		
F/P SPD. CHANGE	13	Fuel pump relay 3	Fuel pump rely 3 turns from OFF to ON.	• Ignition switch: "ON" • Listen near the fuel tank for the sound of fuel pump operation		Sound of operation is heard (fuel pump operates at a high speed)	Procedure No. 31	P.13A-789

MB991958 SCAN TOOL DISPLAY	ITEM NO.	INSPECTION ITEM	DRIVE CONTENTS	INSPECTION REQUIREMENT	NORMAL CONDITION	INSPECTION PROCEDURE NO.	REFERENCE PAGE
NO. 1 INJECTOR	01	Injectors	Cut fuel to No. 1 injector	Engine: warm, idle (cut the fuel supply to each injector in turn and check cylinders which don't affect idling.)	Idling becomes unstable	Code No. P0201, P0202, P0203, P0204	P.13A-323
NO. 2 INJECTOR	02		Cut fuel to No. 2 injector				
NO. 3 INJECTOR	03		Cut fuel to No. 3 injector				
NO. 4 INJECTOR	04		Cut fuel to No. 4 injector				
RADIAT. FAN LO	21	Fan control module	Drive the fan motor	Ignition switch: "ON"	Radiator fan and condenser fan rotate at high speed	Procedure No. 28	P.13A-774
TC WASTE GATE	12	Turbo charger wastegate solenoid	Solenoid valve turns from OFF to ON.	Ignition switch: "ON"	Clicks when solenoid valve is driven.	Code No. P0243	P.13A-335

*NOTE: *: Continues for 27 minutes. Can be released by pressing the CLEAR key.*

CHECK AT THE ENGINE CONTROL MODULE (ECM) TERMINAL VOLTAGE CHECK CHART

M1131153700317

ECM Connector Terminal Arrangement

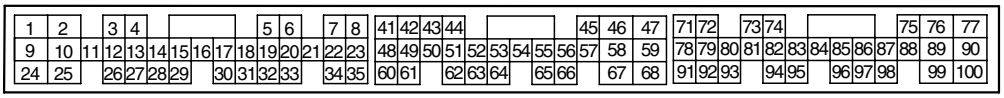

AK502119AB

TERMINAL NO.	INSPECTION ITEM	INSPECTION CONDITION (ENGINE CONDITION)	NORMAL CONDITION
1	No. 1 injector	• Engine: warming up, idling • Suddenly depress the accelerator pedal	From 11 – 14 V momentarily drops slightly
9	No. 2 injector		
24	No. 3 injector		
2	No. 4 injector		
48	Fuel pressure solenoid	Ignition switch: "ON"	B+
		Engine: Cranking → idling (2 minutes or less)	1 V or less → B+
14	Stepper motor coil <A1>	• Engine: warming up, idling • A/C switch: OFF → ON • Headlight switch: OFF → ON	B+ ⇔ 1 V or less (changes repeatedly)
28	Stepper motor coil <A2>		
15	Stepper motor coil <B1>		
29	Stepper motor coil <B2>		
6	EGR vacuum regulator solenoid valve	Ignition switch: "ON"	B+
		• Engine: idling • Suddenly depress the accelerator pedal.	From B+, momentarily drops
20	A/C compressor clutch relay	• Engine: idling • A/C switch: OFF → ON (A/C compressor is operating)	B+ → 1 V or less as A/C clutch cycles
16	Evaporative emission purge solenoid	Ignition switch: "ON"	B+
		Engine: warm up, 3,000 r/min	3 – 13 V
11	Ignition coil – No. 1, No. 4 (Ignition power transistor)	Engine: 3,000 r/min	0.3 – 3.0 V
12	Ignition coil – No. 2, No. 3 (Ignition power transistor)		
41	Turbocharger wastegate solenoid	Ignition switch: "ON"	B+
		Engine: warming up, idling	1 V or less

TERMINAL NO.	INSPECTION ITEM	INSPECTION CONDITION (ENGINE CONDITION)		NORMAL CONDITION
47	Power supply	Ignition switch: "ON"		B+
59				
19	Volume airflow sensor reset signal	Engine: idling		0 – 1 V
		Engine: 3,000 r/min		6 – 9 V
18	Fan control module	Radiator fan is not operating		0 – 0.3 V
		Radiator fan is operating		0.7 V or more
21	Fuel pump relay	Ignition switch: "ON"		B+
		Engine: idling		1 V or less
65	A/C switch 2	Engine: idling Outside air temperature: 25° C or more	when A/C is MAX. COOL condition (when the load by A/C is high)	1 V or less
			when A/C is MAX. HOT condition (when the load by A/C is low)	B+
30	Condenser fan relay (HI)	Fan is not operating [engine coolant temperature: 90° C (194° F) or less]		B+
		Fan is operating at a high speed [engine coolant temperature: 105° C (221° F) or more]		1 V or less
8	Generator G terminal	Engine: warming up, idling (radiator fan: stopped) Headlight: OFF to ON Rear defogger switch: OFF to ON Stoplight switch: OFF to ON		Voltage rises by 0.2 – 3.5 V
31	Condenser fan relay (LO)	Fan is not operating [engine coolant temperature: 90° C (194° F) or less]		B+
		Fan is operating at a low speed [engine coolant temperature: 95 – 100° C (203 – 212° F)]		1 V or less
22	Malfunction Indicator Lamp (SERVICE ENGINE SOON)	Ignition switch: "LOCK" (OFF) → "ON"		1 V or less →9 –13 V (after several seconds have elapsed)
54	Power steering pressure switch	Engine: warming up, idling	When steering wheel is stationary	B+
			When steering wheel is turned	1 V or less
57	MFI relay (power supply)	Ignition switch: "OFF"		B+
		Ignition switch: "ON"		1 V or less
55	Fuel pump relay 3	Engine: From idle, suddenly depress the accelerator pedal.		Voltage rises momentarily from 1V or less
52	Generator FR terminal	Engine: warming up, idling (radiator fan: stopped) Headlight: OFF to ON		Voltage drops
		Rear defogger switch: OFF to ON Stop light switch: OFF to ON		

TERMINAL NO.	INSPECTION ITEM	INSPECTION CONDITION (ENGINE CONDITION)		NORMAL CONDITION
83	A/C switch	Engine: idling	Turn the A/C switch OFF	1 V or less
			Turn the A/C switch ON (A/C compressor is operating)	B+
26	Heated oxygen sensor heater (rear)	Engine: warming up, idling		1 V or less
		Engine: Revving		B+
35	Evaporative emission ventilation solenoid	Ignition switch: "ON"		B+
		Carry out the Actuator test to drive the solenoid valve		For approximately 6 seconds 1 V or less
45	Tachometer signal	Engine: 3,000 r/min		0.3 – 3.0 V
3	Heated oxygen sensor heater (front)	Engine: warming up, idling		9 – 11 V
		Engine: Revving		9 – 11 V → B+ (momentarily)
93	Fuel tank differential pressure sensor	Engine: idling		1.2 – 3.8 V
68	Ignition switch-ST	Engine: cranking		8 V or more
62	Intake air temperature sensor	Ignition switch: "ON"	When Intake air temperature is – 20° C (– 4° F)	3.8 – 4.4 V
			When Intake air temperature is 0° C (32° F)	3.2 – 3.8 V
			When Intake air temperature is 20° C (68° F)	2.3 – 2.9 V
			When Intake air temperature is 40° C (104° F)	1.5 – 2.1 V
			When Intake air temperature is 60° C (140° F)	0.8 – 1.4 V
			When Intake air temperature is 80° C (176° F)	0.4 – 1.0 V
92	Manifold absolute pressure sensor	Engine: idling		0.8 – 2.4 V
		• Engine: idling • Suddenly depress the accelerator pedal		Rises from 0.8 – 2.4 V suddenly
73	Heated oxygen sensor (rear)	• Engine: warming up • Revving		0 and 0.6 – 1.0 V alternates
71	Heated oxygen sensor (front)	• Engine: warming, 2,500 r/min (check using a digital type voltmeter)		0 ⇔ 0.8 V (changes repeatedly)
96	Fuel tank temperature sensor	Ignition switch: "ON"	When fuel tank temperature is 0° C (32° F)	2.7 – 3.1 V
			When fuel tank temperature is 20° C (68° F)	2.1 – 2.5 V
			When fuel tank temperature is 40° C (104° F)	1.6 – 2.0 V
			When fuel tank temperature is 80° C (176° F)	0.8 – 1.2 V

TERMINAL NO.	INSPECTION ITEM	INSPECTION CONDITION (ENGINE CONDITION)		NORMAL CONDITION
60	Backup power supply	Ignition switch: "LOCK" (OFF)		B+
42	Sensor supplied voltage	Ignition switch: "ON"		4.5 – 5.5 V
99	Ignition switch-IG	Ignition switch: "ON"		B+
44	Engine coolant temperature sensor	Ignition switch: "ON"	When engine coolant temperature is – 20° C (– 4° F)	3.9 – 4.5 V
			When engine coolant temperature is 0° C (32° F)	3.2 – 3.8 V
			When engine coolant temperature is 20° C (68° F)	2.3 – 2.9 V
			When engine coolant temperature is 40° C (104° F)	1.3 – 1.9 V
			When engine coolant temperature is 60° C (140° F)	0.7 – 1.3 V
			When engine coolant temperature is 80° C (176° F)	0.3 – 0.9 V
78	Throttle position sensor	Ignition switch: "ON" (check for smooth voltage increase as throttle is moved from idle position to wide open throttle)	Idle	0.535 – 0.735 V
			Wide open throttle	4.5 – 5.5 V
51	Barometric pressure sensor	Ignition switch: "ON"	When altitude is 0 m (0 ft)	3.7 – 4.3 V
			When altitude is 600 m (1,969 ft)	3.4 – 4.0 V
			When altitude is 1,200 m (3,937 ft)	3.2 – 3.8 V
			When altitude is 1,800 m (5,906 ft)	2.9 – 3.5 V
80	Vehicle speed sensor	• Ignition switch: "ON" • Move the vehicle slowly forward		0 ⇔ 8 – 12 V (changes repeatedly)
79	Idle position signal	Ignition switch: "ON"	Set throttle valve to idle position	0 – 1 V
			Open throttle slightly	4 V or more
53	Intake camshaft position sensor	Engine: crankig		0.4 – 3.0 V
		Engine: idling		1.5 – 3.0 V
50	Exhaust camshaft position sensor	Engine: cranking		0.4 – 3.0 V
		Engine: idling		1.5 – 3.0 V
43	Crankshaft position sensor	Engine: cranking		0.4 – 4.0 V
		Engine: idling		1.5 – 2.5 V
61	Volume airflow sensor	Engine: idling		2.2 – 3.2 V
		Engine: 2,500 r/min		

TERMINAL RESISTANCE AND CONTINUITY CHECK

ECM Connector Terminal Arrangement

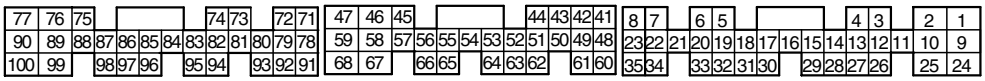

AK502120AB

TERMINAL NO.	INSPECTION ITEM	NORMAL CONDITION (INSPECTION CONDITION)
1 – 47	No. 1 injector	7.8 – 9.2 Ω [at 20° C (68° F)]
9 – 47	No. 2 injector	
24 – 47	No. 3 injector	
2 – 47	No. 4 injector	
47 – 48	Fuel pressure solenoid	29 – 35 Ω [20° C (68° F)]
14 – 47	Stepper motor coil (A1)	28 – 33 Ω [at 20° C (68° F)]
28 – 47	Stepper motor coil (A2)	
15 – 47	Stepper motor coil (B1)	
29 – 47	Stepper motor coil (B2)	
6 – 47	EGR vacuum regulator solenoid valve	29 – 35 Ω [at 20° C (68° F)]
16 – 47	Evaporative emission purge solenoid	30 – 34 Ω [at 20° C (68° F)]
41 – 47	Turbocharger wastegate solenoid	29 – 35 Ω [20° C (68° F)]
46 –Body ground	ECM ground	Continuity (approximately 0 Ω)
58 –Body ground	ECM ground	
26 – 47	Heated oxygen sensor heater (rear)	11 – 18 Ω [at 20° C (68° F)]
35 – 47	Evaporative emission ventilation solenoid	17 – 21 Ω [at 20° C (68° F)]
3 – 47	Heated oxygen sensor heater (front)	4.5 – 8.0 Ω [at 20° C (68° F)]
34 –62	Intake air temperature sensor	13 –17 kΩ [when intake air temperature is – 20° C (– 4° F)]
		5.3 – 6.7 kΩ [when intake air temperature is 0° C (32° F)]
		2.3 – 3.0 kΩ [when intake air temperature is 20° C (68° F)]
		1.0 – 1.5 kΩ [when intake air temperature is 40° C (104° F)]
		0.56 – 0.76 kΩ [when intake air temperature is 60° C (140° F)]
		0.30 – 0.42 kΩ [when intake air temperature is 80° C (176° F)]

TERMINAL NO.	INSPECTION ITEM	NORMAL CONDITION (INSPECTION CONDITION)
44 – 49	Engine coolant temperature sensor	14 –17 kΩ [when engine coolant temperature is –20° C (–4° F)]
		5.1 – 6.5 kΩ [when engine coolant temperature is 0° C (32° F)]
		2.1 – 2.7 kΩ [when engine coolant temperature is 20° C (68° F)]
		0.9 – 1.3 kΩ [when engine coolant temperature is 40° C (104° F)]
		0.48 – 0.68 kΩ [when engine coolant temperature is 60° C (140° F)]
		0.26 – 0.36 kΩ [when engine coolant temperature is 80° C (176° F)]

INSPECTION PROCEDURE USING AN OSCILLOSCOPE

M1131154501137

VOLUME AIRFLOW SENSOR

Required Special Tool:
MB991709: Test Harness Set

Measurement Method

1. Disconnect the volume airflow sensor connector, and connect the test harness special tool (MB991709) in between. (All terminals should be connected.)
2. Connect the oscilloscope probe to volume airflow sensor connector terminal No. 3.

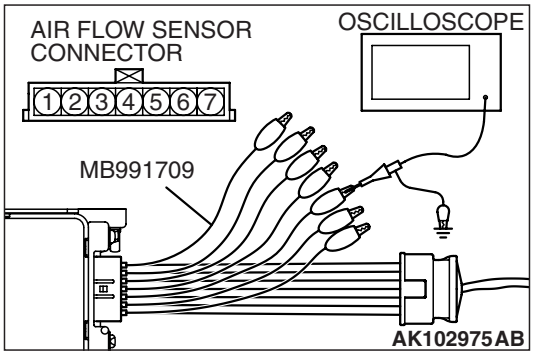

Alternate method (Test harness not available)

1. Connect the oscilloscope probe to ECM terminal No. 90.

Standard Wave Pattern

Observation conditions	
Function	**Special pattern**
Pattern height	Low
Pattern selector	Display
Engine r/min	Idle speed

Standard wave pattern

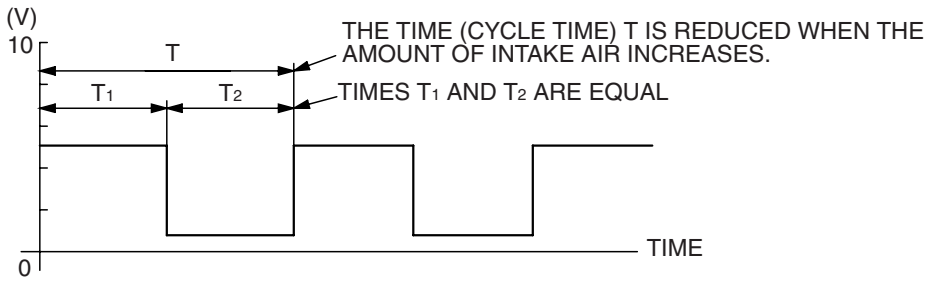

AKX01595 AB

Observation conditions
Rev engine, observe T1 and T2 remain equal.

Standard wave pattern

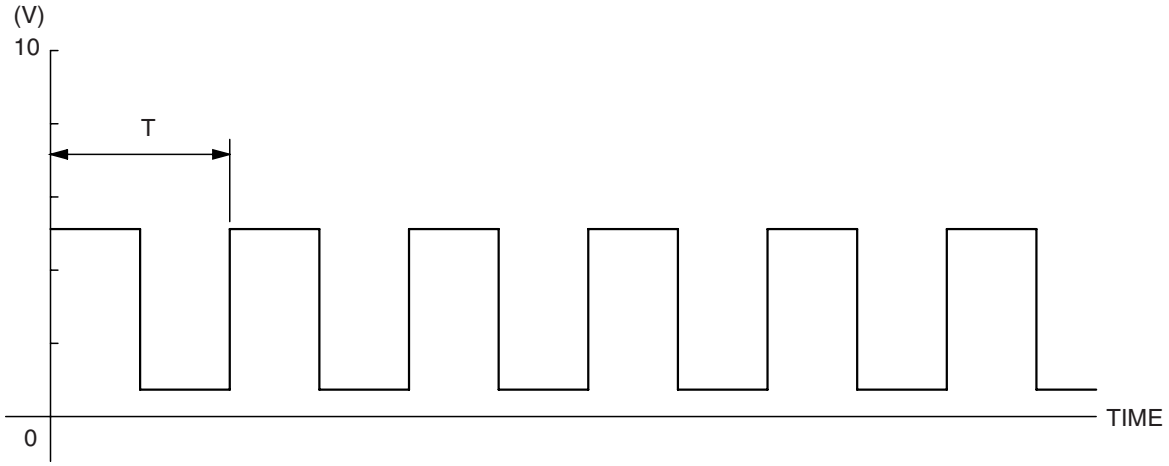

AKX01596 AB

Wave Pattern Observation Points

Check that cycle time T becomes shorter and the frequency increases when the engine speed is increased.

Examples of Abnormal Wave Patterns

Example 1

Cause of problem

- Sensor interface malfunction.

Wave pattern characteristics

- Rectangular wave pattern is output even when the engine is not started.

Example 2

Cause of problem

- Damaged rectifier or vortex generation column.

Wave pattern characteristics

- Unstable wave pattern with non-uniform frequency. An ignition leak will distort the wave pattern temporarily, even if the volume airflow sensor is normal.

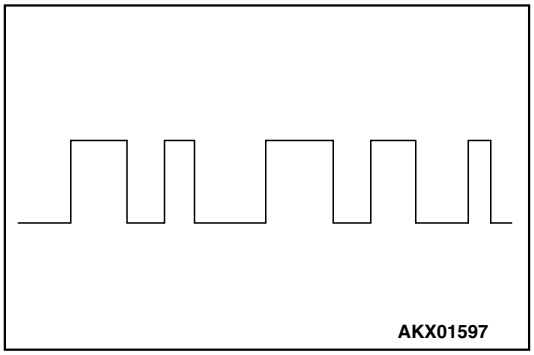

CAMSHAFT POSITION SENSOR AND CRANKSHAFT POSITION SENSOR

Required Special Tools:

MB991709: Test Harness Set

MB998478: Test Harness

Measurement Method

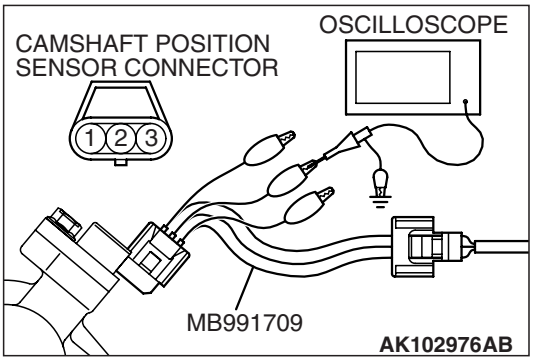

1. Disconnect the camshaft position sensor connector, and connect the test harness special tool (MB991709) in between. (All terminals should be connected.)
2. Connect the oscilloscope probe to camshaft position sensor connector terminal No. 2.

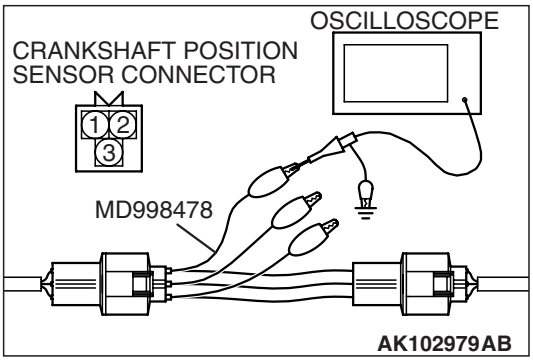

3. Disconnect the crankshaft position sensor connector, and connect the test harness special tool (MD998478) in between.
4. Connect the oscilloscope probe to crankshaft position sensor connector terminal No. 2. (black clip of special tool)

Alternate method (Test harness not available)

1. Connect the oscilloscope probe to ECM terminal No. 88. (Check the camshaft position sensor signal wave pattern.)
2. Connect the oscilloscope probe to ECM terminal No. 89. (Check the crankshaft position sensor signal wave pattern.)

Standard Wave Pattern

Observation conditions	
Function	**Special pattern**
Pattern height	Low
Pattern selector	Display
Engine r/min	Idle speed

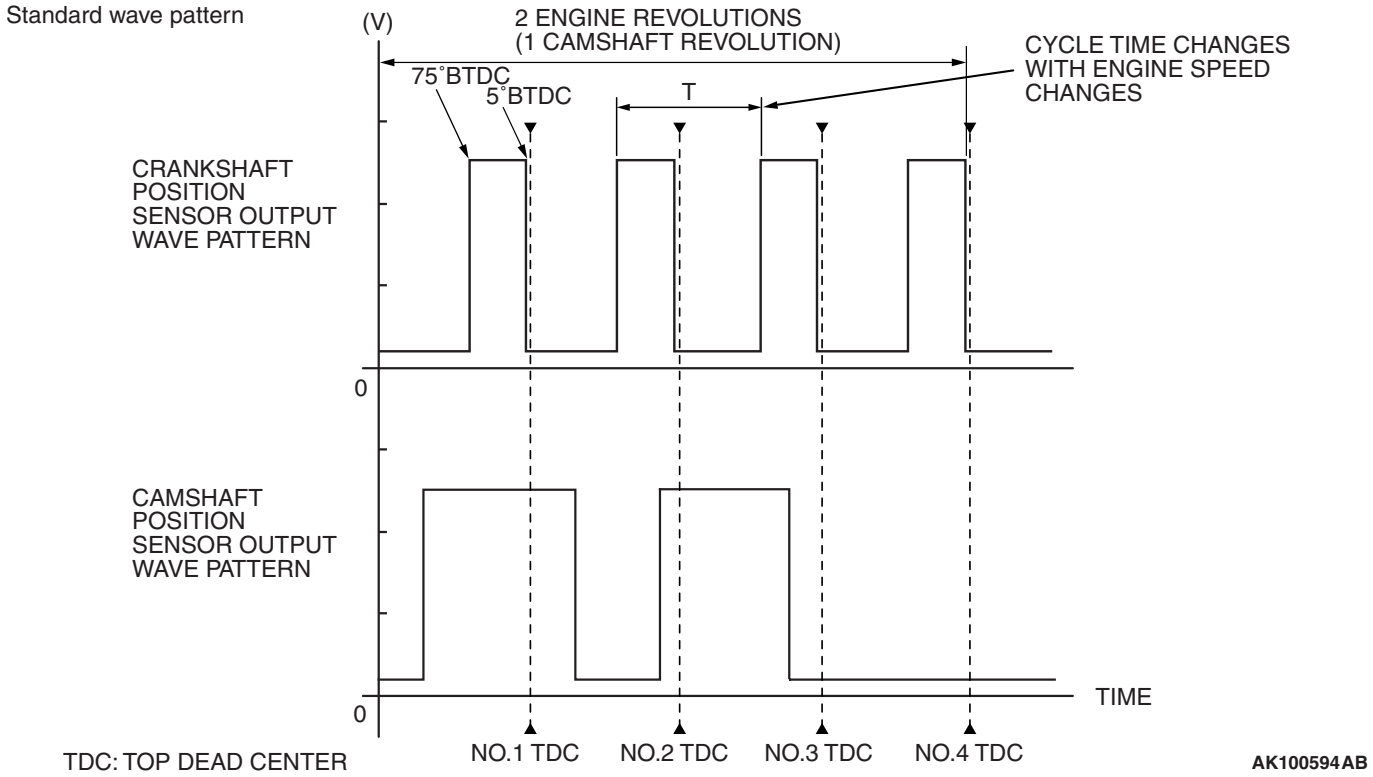

Wave Pattern Observation Points

Check that cycle time T becomes shorter when the engine speed increased.

Examples of Abnormal Wave Patterns

Example 1

Cause of problem

- Sensor interface malfunction.

Wave pattern characteristics

- Rectangular wave pattern is output even when the engine is not started.

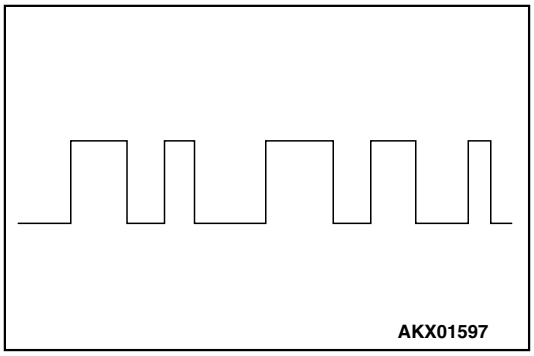

Example 2

Cause of problem

- Loose timing belt.
- Abnormality in sensor disc.

Wave pattern characteristics

- Wave pattern is displaced to the left or right.

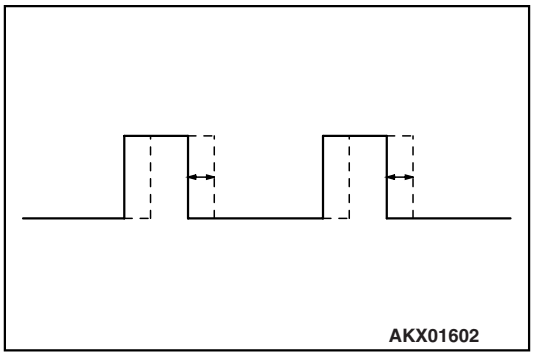

INJECTOR

Required Special Tool:

MB991348: Test Harness Set

Measurement Method

1. Disconnect the injector connector, and connect the test harness special tool (MB991348) in between. (All terminals should be connected.)
2. Connect the oscilloscope probe to injector connector terminal No. 2.

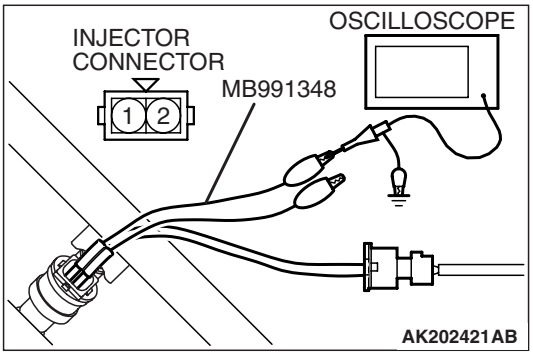

Alternate method (Test harness not available)

1. Connect the oscilloscope probe to ECM terminal No. 1. (When checking the number 1 cylinder.)
2. Connect the oscilloscope probe to ECM terminal No. 14. (When checking the number 2 cylinder.)
3. Connect the oscilloscope probe to ECM terminal No. 2. (When checking the number 3 cylinder.)
4. Connect the oscilloscope probe to ECM terminal No. 15. (When checking the number 4 cylinder.)

Standard Wave Pattern

Observation conditions	
Function	**Special pattern**
Pattern height	Variable
Variable knob	Adjust while viewing the wave pattern
Pattern selector	Display
Engine r/min	Idle speed

Standard wave pattern

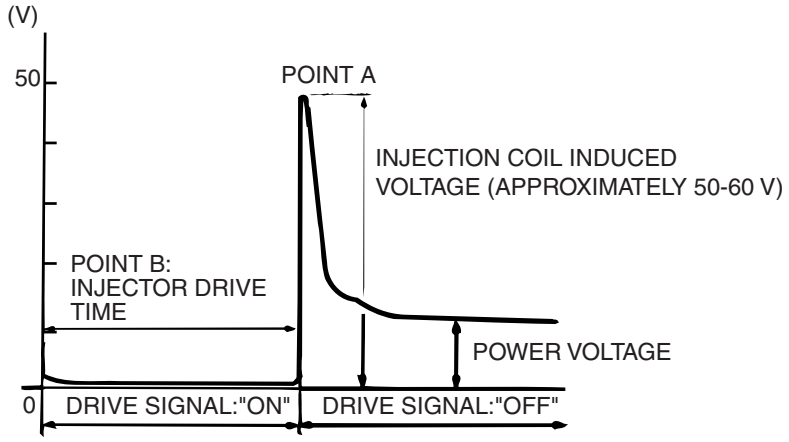

AKX01604 AB

Wave Pattern Observation Points

Point A: Height of injector coil induced voltage.

CONTRAST WITH STANDARD WAVE PATTERN	PROBABLE CAUSE
Injector coil induced voltage is low or doesn't appear at all	Short in the injector solenoid

Point B: Injector drive time

1. The injector drive time should be synchronized with the scan tool tester display.
2. When the engine is suddenly revved, the drive time will be greatly extended at first, but the drive time will soon return to original length.

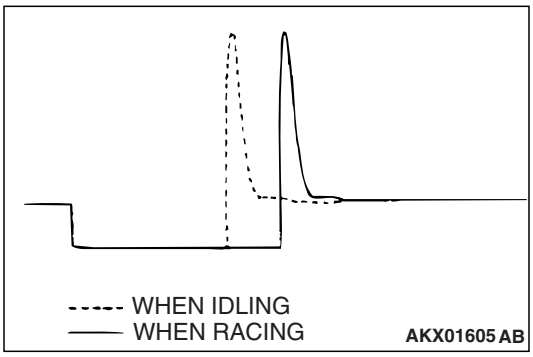

AKX01605 AB

IDLE AIR CONTROL MOTOR (STEPPER MOTOR)

Required Special Tool:
MB991709: Test Harness Set

Measurement Method

1. Disconnect the idle air control motor connector, and connect the test harness special tool (MB991709) in between. (All terminals should be connected.)
2. Connect the oscilloscope probe to the idle air control motor connector terminal No. 1, terminal No. 3, terminal No. 4 and terminal No. 6 respectively.

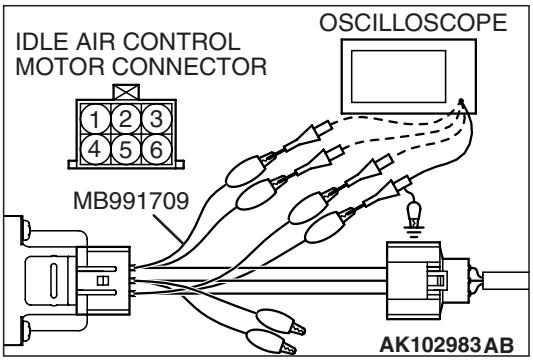

Alternate method (Test harness not available)

1. Connect the oscilloscope probe to the ECM terminal No. 4, terminal No. 5, terminal No. 17 and terminal No. 18 respectively.

Standard Wave Pattern

Observation conditions	
Function	**Special pattern**
Pattern height	High
Pattern selector	Display
Engine condition	Turn the ignition switch from "LOCK" (OFF) to "ON" (without starting the engine).
	While the engine is idling, turn the A/C switch to "ON".
	Immediately after starting the warm the engine (approximately one minute).

Standard wave pattern

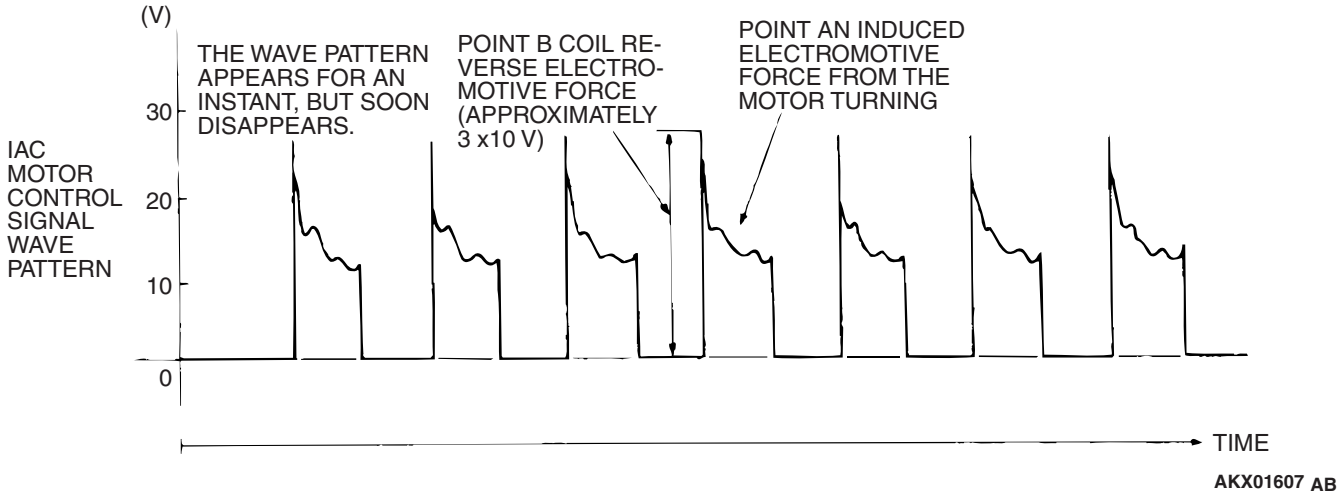

Wave Pattern Observation Points

Check that the standard wave pattern appears when the idle air control motor is operating.

Point A: Presence or absence of induced electromotive force from the motor turning. (Refer to abnormal wave pattern.)

CONTRAST WITH STANDARD WAVE PATTERN	PROBABLE CAUSE
Induced electromotive force does not appear or is extremely small	Malfunction of motor

Point B: Height of coil back electromotive force

CONTRAST WITH STANDARD WAVE PATTERN	PROBABLE CAUSE
Coil reverse electromotive force does not appear or is extremely small	Short in the coil

Examples of Abnormal Wave Patterns

Example 1

Cause of problem

- Malfunction of motor. (Motor is not operating.)

Wave pattern characteristics

- Induced electromotive force from the motor turning does not appear.

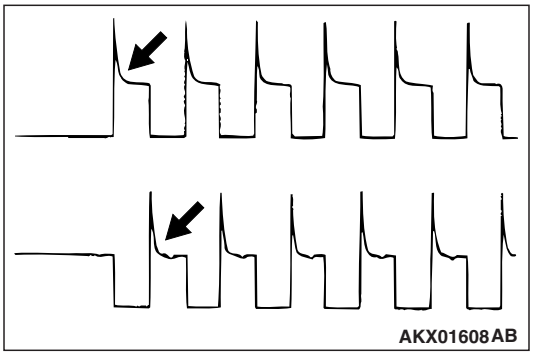

Example 2

Cause of problem

- Open circuit in the line between the idle air control motor and the ECM.

Wave pattern characteristics

- Current is not supplied to the motor coil on the open circuit side. (Voltage does not drop to 0 volt.) Furthermore, the induced electromotive force wave pattern at the normal side is slightly different from the normal wave pattern.

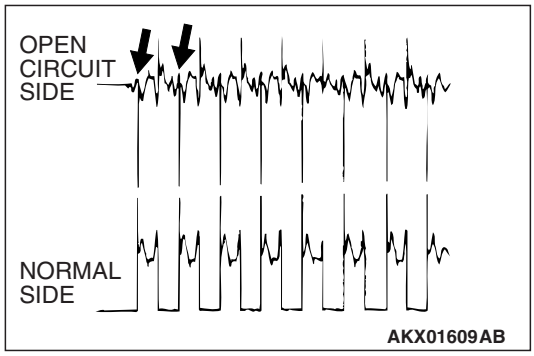

IGNITION COIL AND IGNITION POWER TRANSISTOR

Required Special Tool:

MB991348: Test Harness Set

Measurement Method

1. Disconnect the ignition coil connector, and connect test harness special tool, MB991348, in between. (All terminals should be connected.)

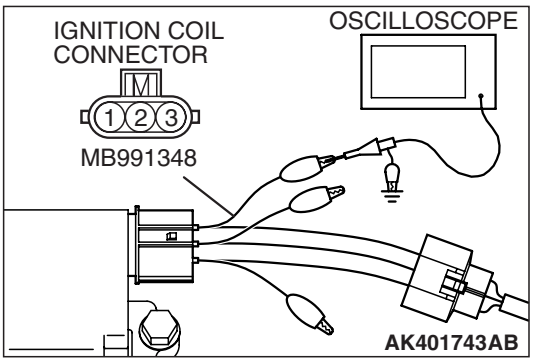

2. Connect the oscilloscope probe to ignition coil connector terminal No. 3.

Alternate method (Test harness not available)

1. Connect the oscilloscope probe to the ECM terminal No. 10 (for number 1 – number 4), terminal No. 23 (for number 2 – number 3).

Standard Wave Pattern

Observation conditions	
Function	**Special pattern**
Pattern height	Low
Pattern selector	Display
Engine r/min	Approximately 1,200 r/min

Standard wave pattern

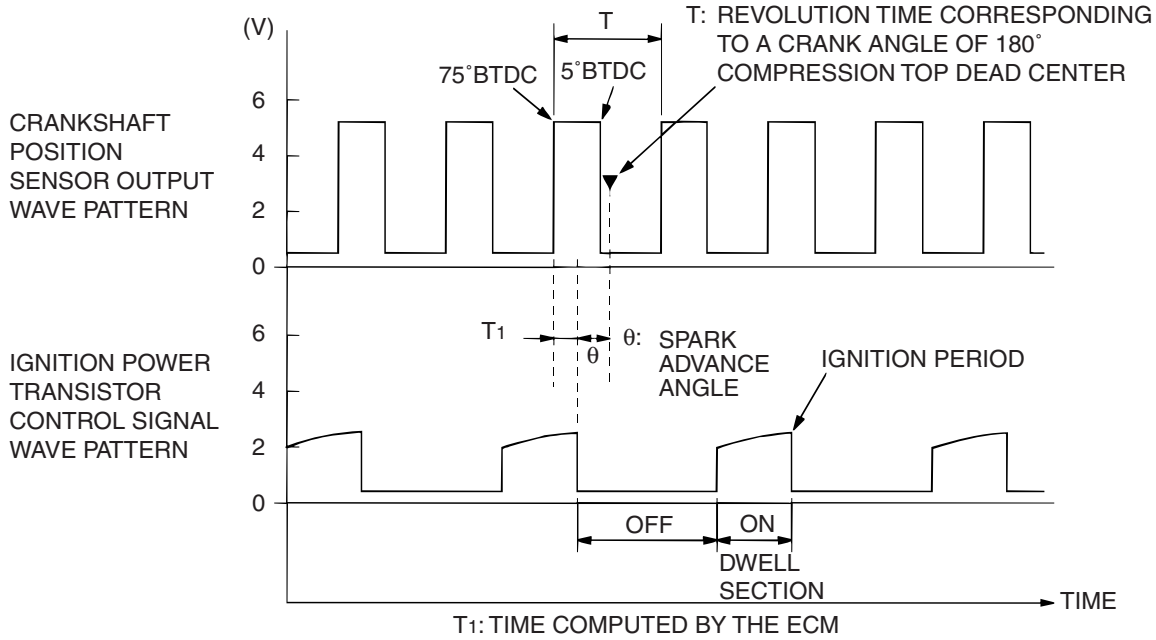

AK000068 AD

Wave Pattern Observation Points

Point: Condition of wave pattern build-up section and maximum voltage (Refer to abnormal wave pattern examples 1 and 2.

CONDITION OF WAVE PATTERN BUILD-UP SECTION AND MAXIMUM VOLTAGE	PROBABLE CAUSE
Rises from approximate 2 volts to approximate 4.5 volts at the top-right	Normal
2-volt rectangular wave	Open-circuit in ignition primary circuit
Rectangular wave at power voltage	Ignition power transistor malfunction

Examples of Abnormal Wave Patterns

Example 1 (Wave pattern during engine cranking)

Cause of problem

- Open-circuit in ignition primary circuit

Wave pattern characteristics

- Top-right part of the build-up section cannot be seen, and voltage value is approximately 2 volts too low.

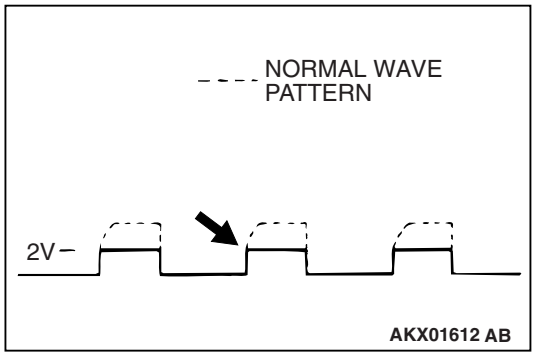

Example 2 (Wave pattern during engine cranking)

Cause of problem

- Malfunction in ignition power transistor

Wave pattern characteristics

- Power voltage results when the ignition power transistor is ON.

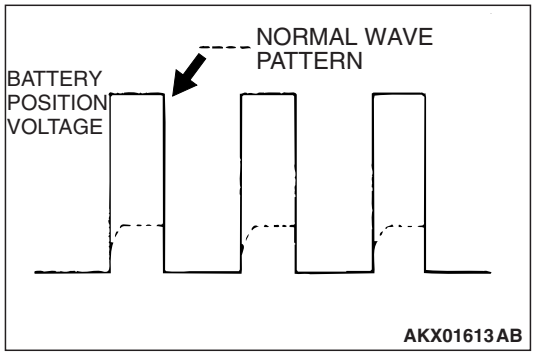

SPECIAL TOOLS

M1131000600955

TOOL	TOOL NUMBER AND NAME	SUPERSESSION	APPLICATION
A 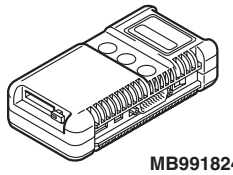 MB991824 B 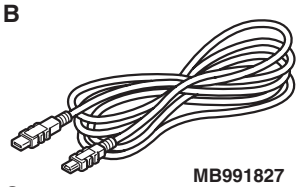 MB991827 C 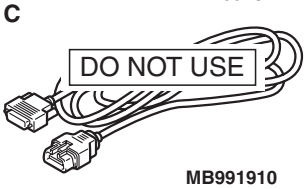 MB991910 D 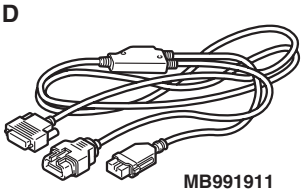 MB991911 E 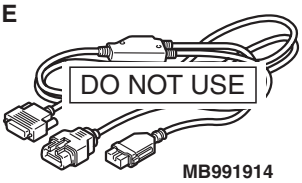 MB991914 F 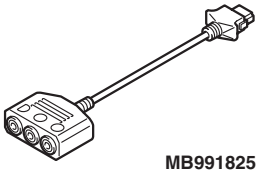 MB991825 G 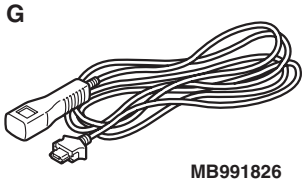 MB991826 MB991958	MB991958 A: MB991824 B: MB991827 C: MB991910 D: MB991911 E: MB991914 F: MB991825 G: MB991826 M.U.T.-III sub assembly A: Vehicle Communication Interface (V.C.I.) B: M.U.T.-III USB Cable C: M.U.T.-III Main Harness A (Vehicles with CAN communication system) D: M.U.T.-III Main Harness B (Vehicles without CAN communication system) E: M.U.T.-III Main Harness C (for Daimler Chrysler models only) F: M.U.T.-III Adapter Harness G: M.U.T.-III Trigger Harness	MB991824-KIT	• Reading diagnostic trouble code • MFI system inspection • Measurement of fuel pressure
MB991348	MB991348 Test harness set	MB991348-01	• Inspection using an oscilloscope • Adjustment of throttle position sensor

TOOL	TOOL NUMBER AND NAME	SUPERSESSION	APPLICATION
	MB991709 Test harness set	MB991709-01	• Inspection using an oscilloscope • Inspection of idle air control motor
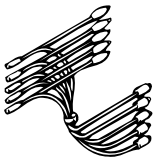 MB991658	MB991658 Test harness SET	Tool not available	• Inspection of heated oxygen sensor (rear)
	MD998464 Test harness (4 pin, square)	MD998464-01	• Inspection of heated oxygen sensor (front) • Inspection using an oscilloscope
	MD998478 Test harness (3 pin, triangle)	MD998478-01	• Inspection using an oscilloscope
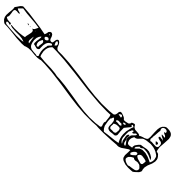	MD998709 Adaptor hose	MIT210196	Measurement of fuel pressure
	MD998742 Hose adaptor	MD998742-01	
 MB991637	MB991637 Fuel pressure gauge set	Tool not available	

ON-VEHICLE SERVICE

COMPONENT LOCATION

M1131002101584

NAME	SYMBOL	NAME	SYMBOL
Air conditioning compressor clutch relay	J	Fuel tank temperature sensor	Y
Crankshaft position sensor	K	Heated oxygen sensor (front)	M
Clutch pedal position switch	U	Heated oxygen sensor (rear)	X
Data link connector	V	Idle air control motor	H
EGR vacuum regulator solenoid valve	D	Ignition coil	N
Engine control module (ECM)	W	Injector	F
Engine coolant temperature sensor	P	Injector resistor	C
Engine speed detection connector	J	Intake camshaft position sensor	P
Evaporative emission purge solenoid	B	Knock sensor	O
Evaporative emission ventilation solenoid	Z	Manifold absolute pressure sensor	E
Exhaust camshaft position sensor	P	Multiport fuel injection (MFI) relay	J
Fan control module	Q	Oil feeder control valve	A
Fuel pressure solenoid	B	Power steering pressure switch	L
Fuel pump relay 1, 2	T	Throttle position sensor	G
Fuel pump relay 3	C	Turbocharger wastegate solenoid	S
Fuel pump resistor	C	Vehicle speed sensor	I
Fuel tank differential pressure sensor	Y	Volume airflow sensor (with built-in intake air temperature sensor and barometric pressure sensor)	R

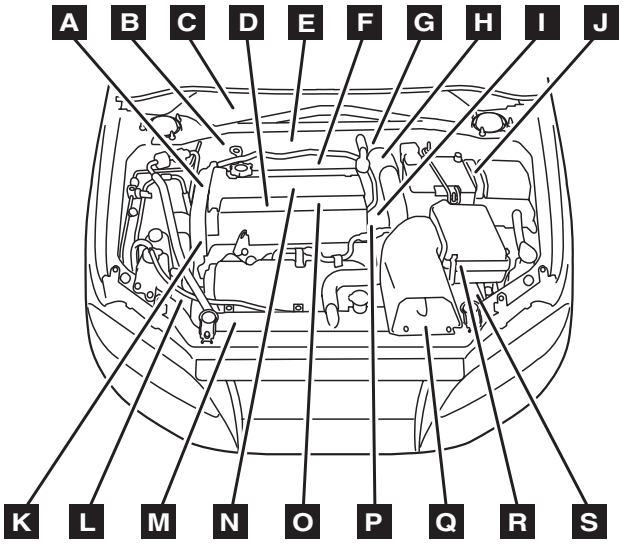
A
B
C
D
E
F
G
H
I
J
K
L
M
N
O
P
Q
R
S

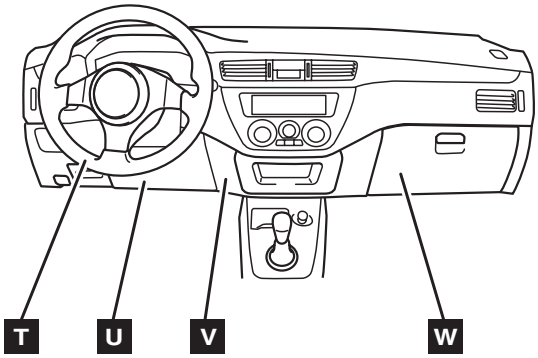
T
U
V
W

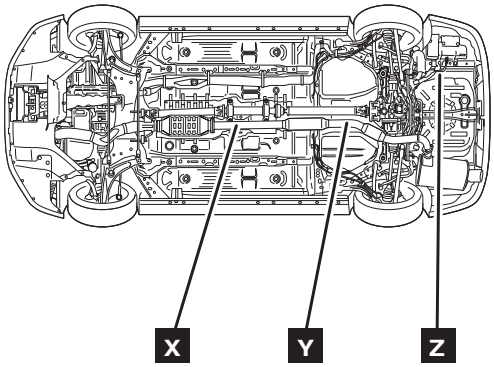
X
Y
Z

AK200517AD

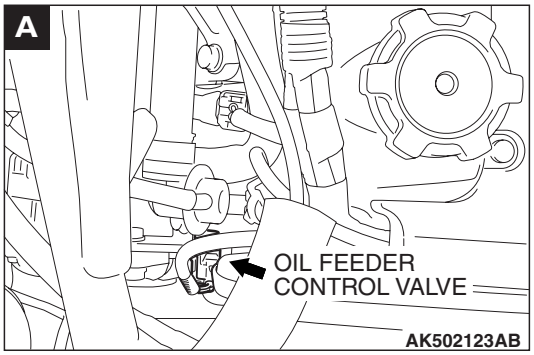
A
OIL FEEDER
CONTROL VALVE
AK502123AB

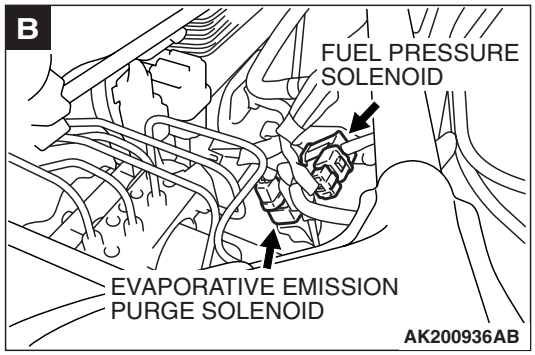
B
FUEL PRESSURE
SOLENOID
EVAPORATIVE EMISSION
PURGE SOLENOID
AK200936AB

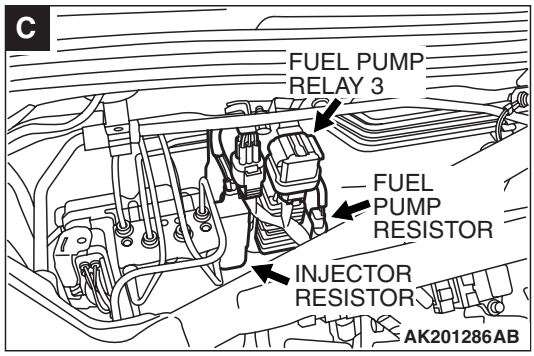
C
FUEL PUMP
RELAY 3
FUEL
PUMP
RESISTOR
INJECTOR
RESISTOR
AK201286AB

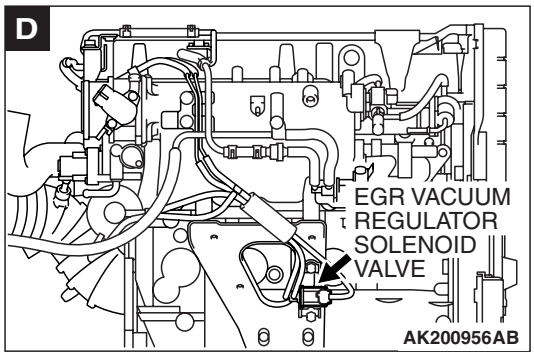
D
EGR VACUUM
REGULATOR
SOLENOID
VALVE
AK200956AB

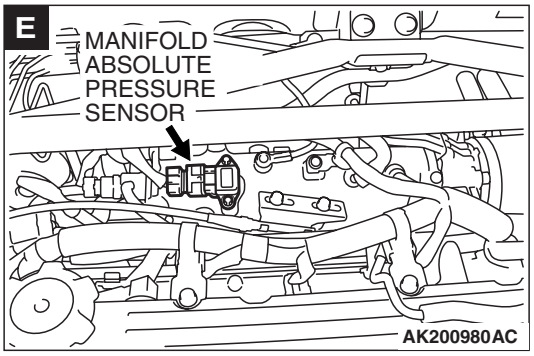
E
MANIFOLD ABSOLUTE PRESSURE SENSOR
AK200980AC

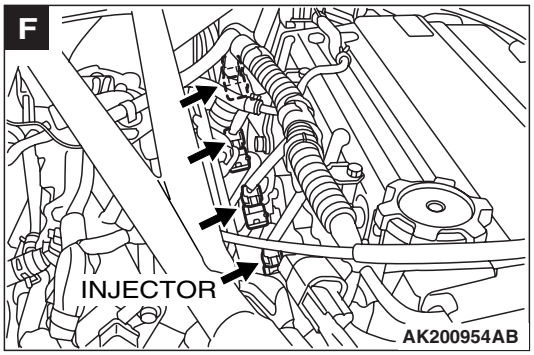
F
INJECTOR
AK200954AB

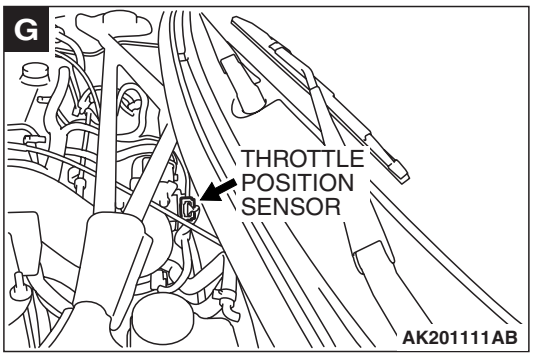
G
THROTTLE POSITION SENSOR
AK201111AB

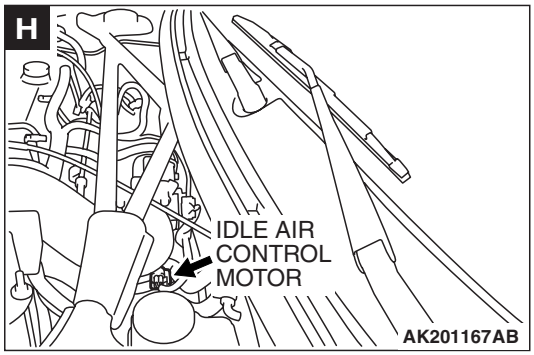
H
IDLE AIR CONTROL MOTOR
AK201167AB

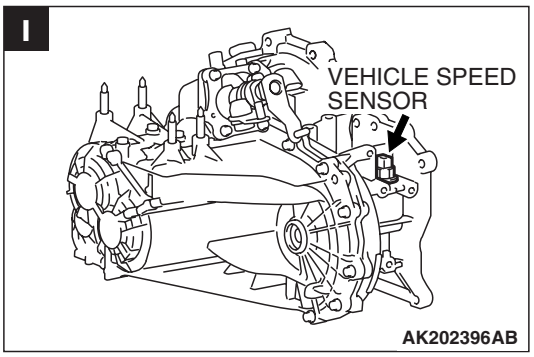
I
VEHICLE SPEED SENSOR
AK202396AB

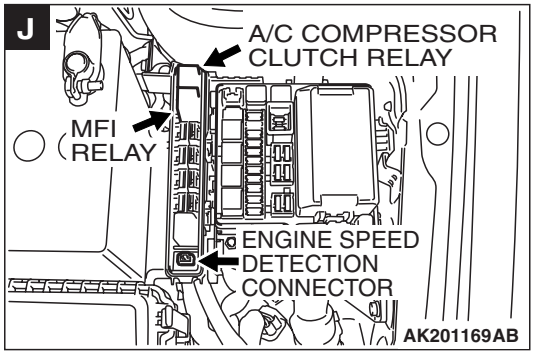
J
A/C COMPRESSOR CLUTCH RELAY
MFI RELAY
ENGINE SPEED DETECTION CONNECTOR
AK201169AB

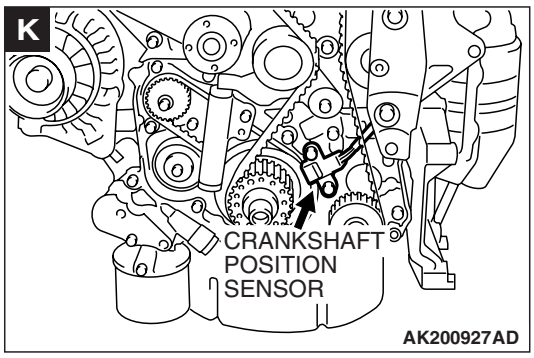
K
CRANKSHAFT POSITION SENSOR
AK200927AD

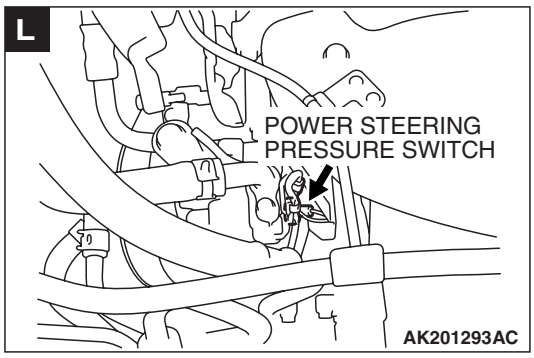
L
POWER STEERING PRESSURE SWITCH
AK201293AC

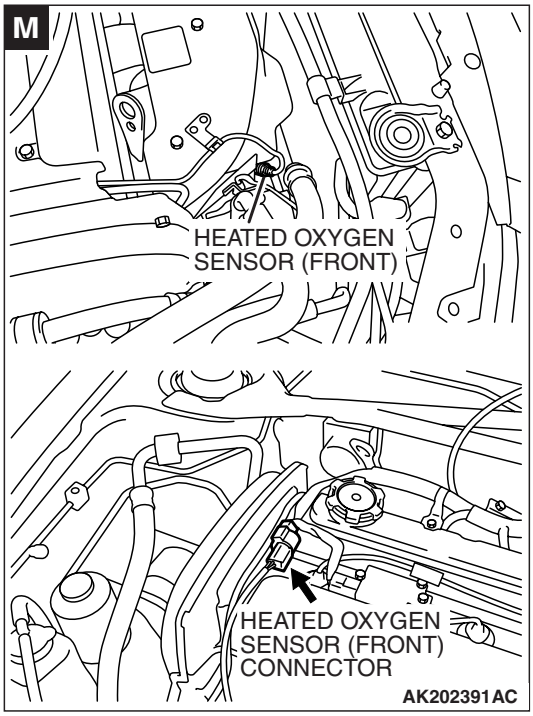
M
HEATED OXYGEN
SENSOR (FRONT)
HEATED OXYGEN
SENSOR (FRONT)
CONNECTOR
AK202391AC

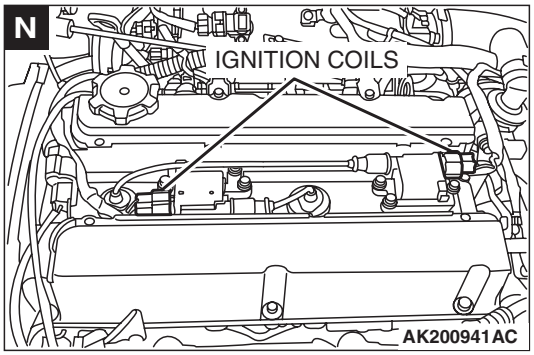
N
IGNITION COILS
AK200941AC

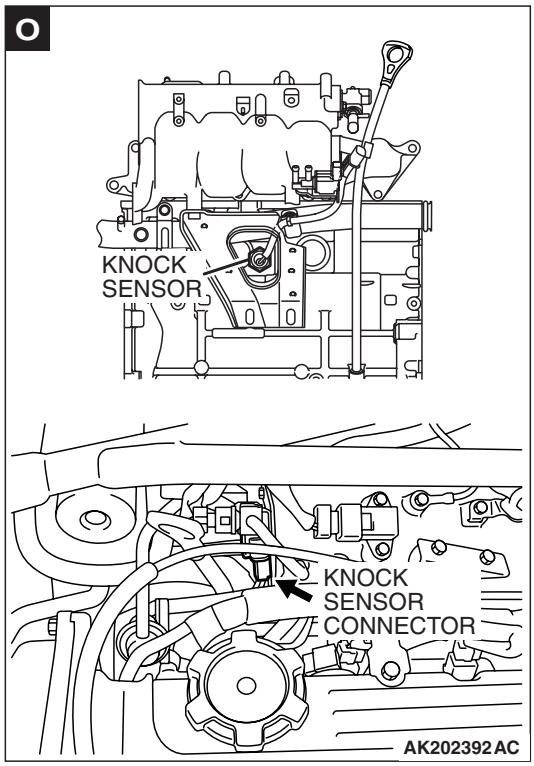
O
KNOCK
SENSOR
KNOCK
SENSOR
CONNECTOR
AK202392AC

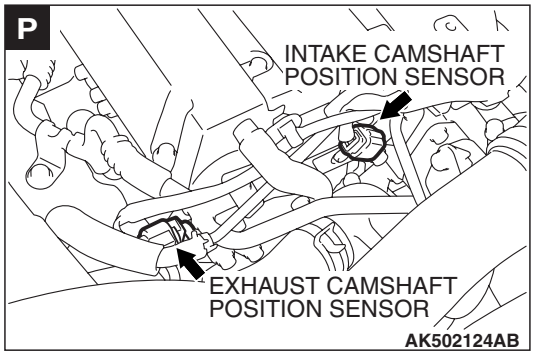
P
INTAKE CAMSHAFT
POSITION SENSOR
EXHAUST CAMSHAFT
POSITION SENSOR
AK502124AB

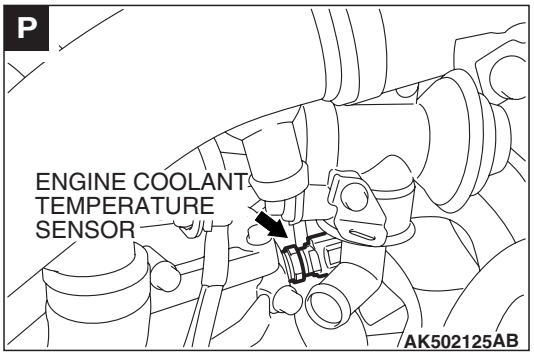
P
ENGINE COOLANT TEMPERATURE SENSOR
AK502125AB

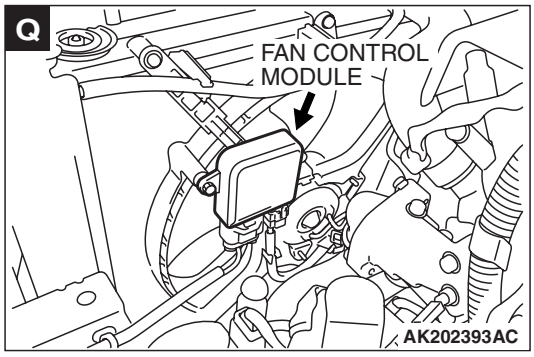
Q
FAN CONTROL MODULE
AK202393AC

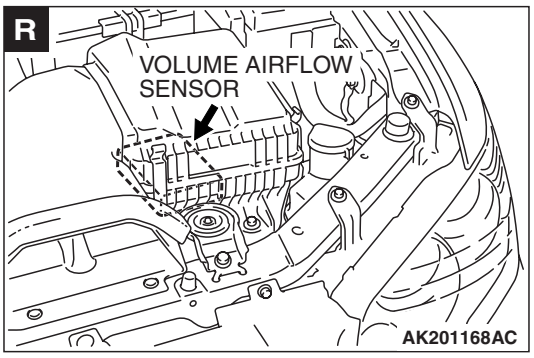
R
VOLUME AIRFLOW SENSOR
AK201168AC

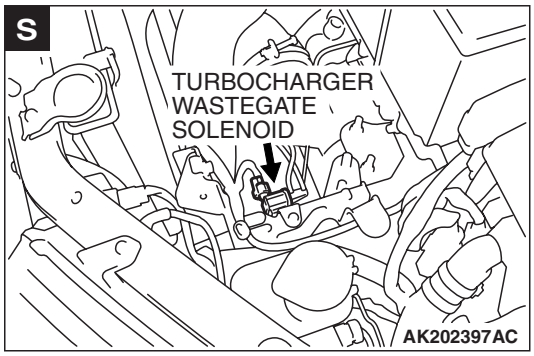
S
TURBOCHARGER WASTEGATE SOLENOID
AK202397AC

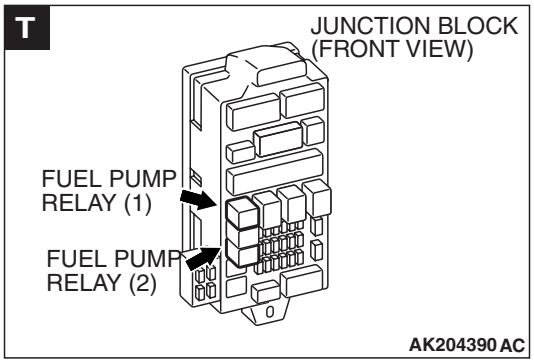
T
JUNCTION BLOCK (FRONT VIEW)
FUEL PUMP RELAY (1)
FUEL PUMP RELAY (2)
AK204390 AC

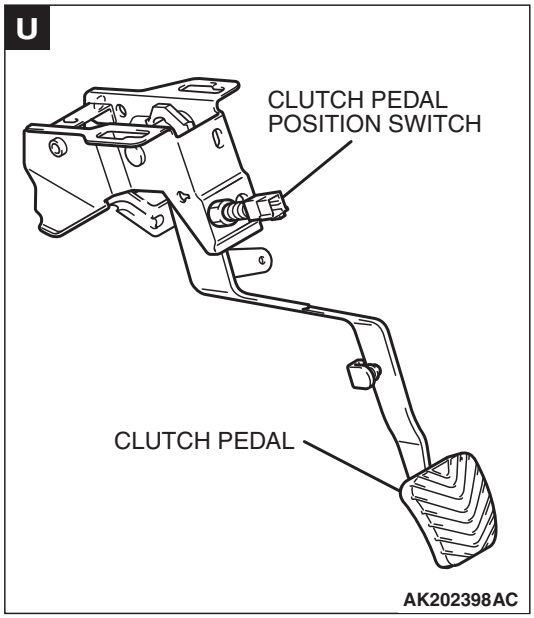
U
CLUTCH PEDAL POSITION SWITCH
CLUTCH PEDAL
AK202398AC

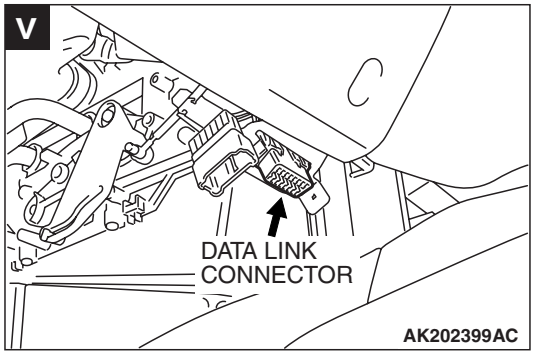
V
DATA LINK CONNECTOR
AK202399AC

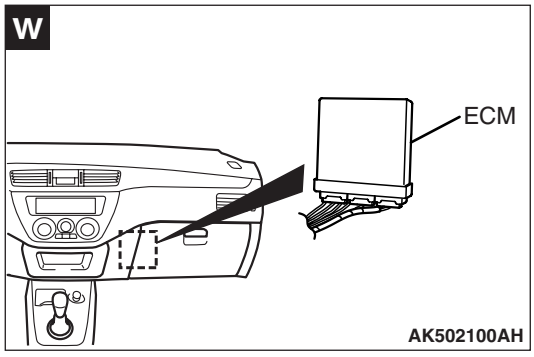
W
ECM
AK502100AH

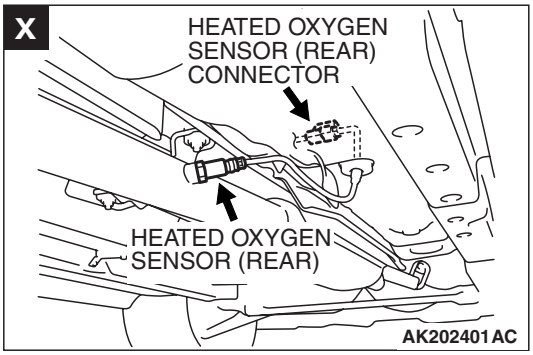

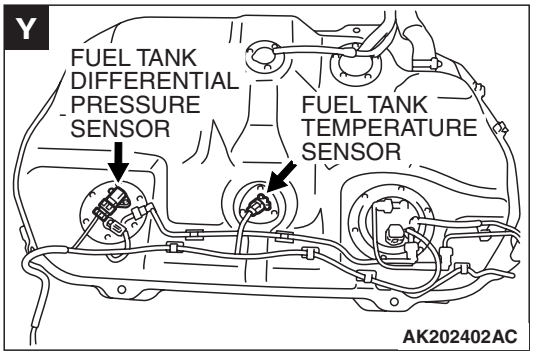

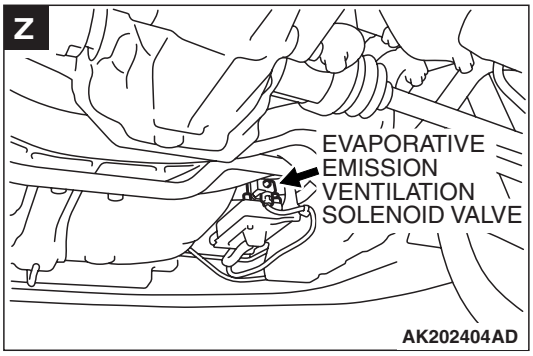

THROTTLE BODY (THROTTLE VALVE AREA) CLEANING

M1131001000666

1. Remove the air intake hose from the throttle body.

⚠ CAUTION

- **Do not spray the cleaning solvent directly to the throttle valve.**
- **Make sure the cleaning solvent does not enter the motor from the bypass line. Also make sure the cleaning solvent does not enter the sensor through the shaft.**
- **Molybdenum disulfide is applied to the area around the throttle valve shaft (as shown on the left). Therefore, do not clean this area with cleaning solvent.**

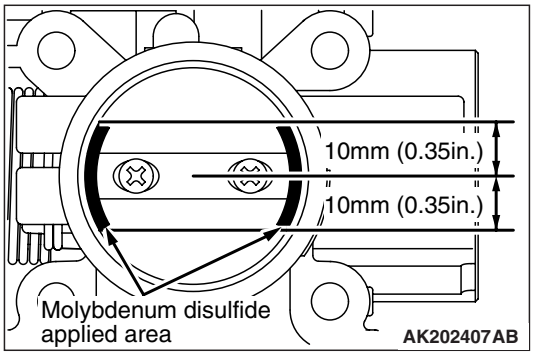

Spray cleaning solvent on a clean cloth.

2. Wipe off the dirt around the throttle valve with the cloth sprayed with cleaning solvent.
3. Attach the air intake hose.
4. Adjust the basic idle speed. (Refer to P.13A-864)

THROTTLE POSITION SENSOR ADJUSTMENT

M1131001100704

Required Special Tools:

- MB991958: Scan Tool (M.U.T.-III Sub Assembly)
  - MB991824: V.C.I.
  - MB991827: USB Cable
  - MB991911: Main Harness B
- MB991348: Test Harness Set

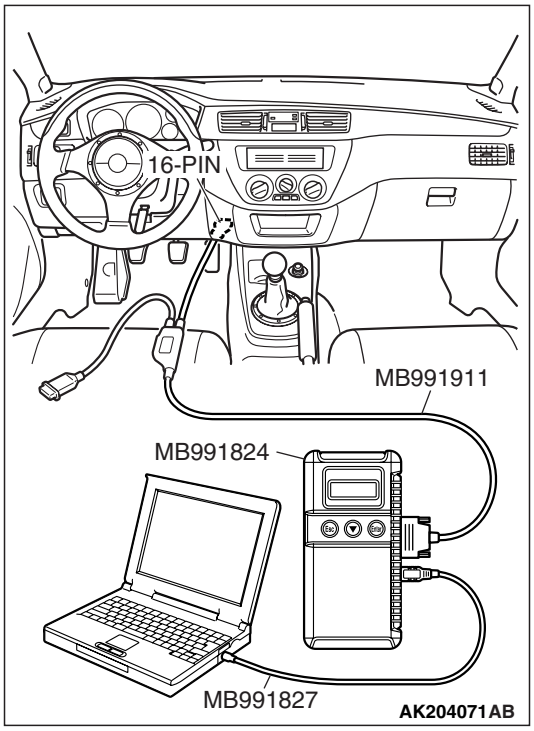

⚠ CAUTION

To prevent damage to scan tool MB991958, always turn the ignition switch to the "LOCK" (OFF) position before connecting or disconnecting the scan tool MB991958.

1. Connect scan tool MB991958 to the data link connector. When not using scan tool follow the steps below.

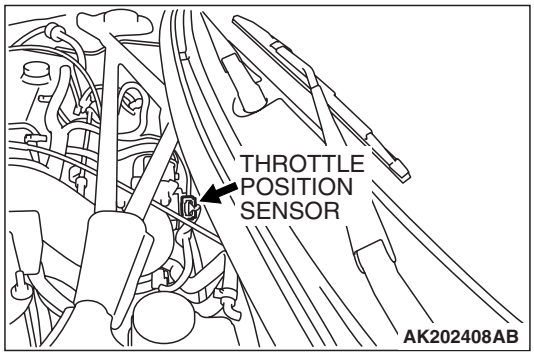

(1) Disconnect the throttle position sensor connector, and connect the special tool MB991348 in between. (All terminals should be connected.)

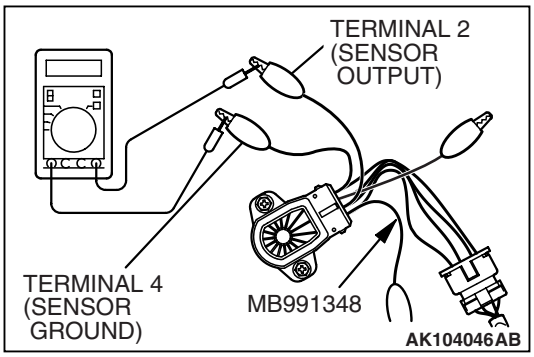

(2) Connect a digital voltmeter between throttle position sensor terminal No. 2 (sensor output) and terminal No. 4 (sensor ground).

2. Turn the ignition switch to the "ON" position (but do not start the engine).
3. Check the throttle position sensor output voltage.

   Standard value: 535 – 735 mV

4. If not within the standard value range, adjust by loosening throttle position sensor mounting bolts and turning the throttle position sensor body. After adjusting, tighten the bolts securely.
5. Turn the ignition switch to the "LOCK" (OFF) position.
6. Disconnect scan tool MB991958. When the scan tool is not used, remove special tool MB991348, and connect the throttle position sensor connector.

BASIC IDLE SPEED ADJUSTMENT

M1131001800769

Required Special Tools:

- MB991958: Scan Tool (M.U.T.-III Sub Assembly)
  - MB991824: V.C.I.
  - MB991827: USB Cable
  - MB991911: Main Harness B

NOTE: The standard idle speed has been adjusted with the speed adjusting screw (SAS), by the manufacturer, and there should be no need for readjustment.

NOTE: If the adjustment has been changed by mistake, the idle speed may become too high or the idle speed may drop too low when loads A/C, defogger, etc. are placed on the engine. If this occurs, adjust by the following procedure.

NOTE: The adjustment, if made, should be made after first confirming that the spark plugs, the injectors, the idle air control motor, compression, etc., are all normal.

1. The vehicle should be prepared as follows before the inspection and adjustment.
   - Engine coolant temperature: 80 – 95° C (176 – 203° F)
   - Lights, electric cooling fan and accessories: OFF
   - Transaxle: Neutral

⚠ CAUTION

To prevent damage to scan tool MB991958, always turn the ignition switch to the "LOCK" (OFF) position before connecting or disconnecting scan tool MB991958.

2. Connect scan tool MB991958 to the data link connector (16-pin).
3. Start the engine and run at idle.
4. Select the item number 30 of the scan tool Actuator test.

   NOTE: Use the scan tool to hold the IAC motor at the basic step to adjust the basic idle speed.
5. Check the idle speed.

   Standard value: 850 ±50 r/min

   NOTE: The engine speed may be 20 to 100 r/min lower than indicated above for a new vehicle [driven approximately 500 km (300 mile) or less], but no adjustment is necessary.

   NOTE: If the engine stalls or the engine speed is low even though the vehicle has been driven approximately 500 km (300 mile) or more, it is probable that deposits are adhered to the throttle valve, so clean it. (Refer to P.13A-862.)

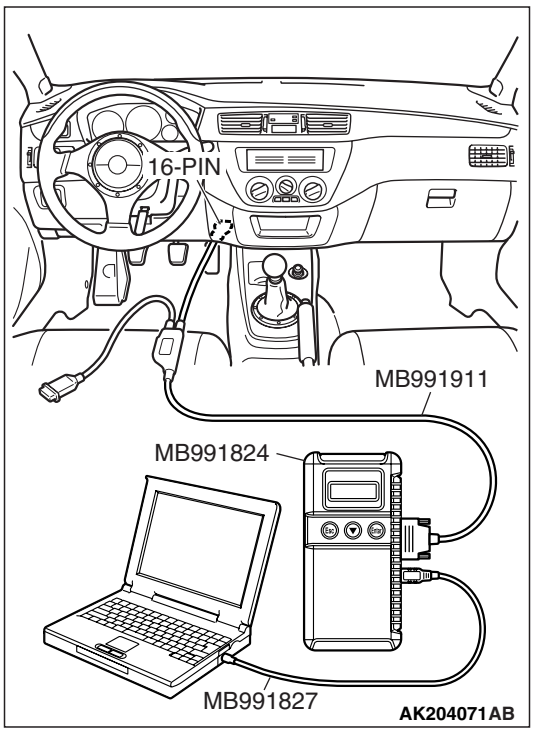

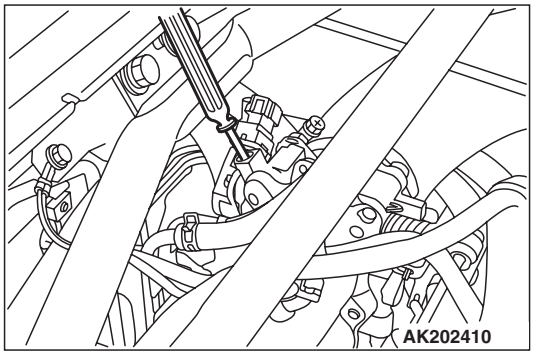

6. If not within the standard value range, turn the speed adjusting screw (SAS) to make the necessary adjustment.
7. Press the scan tool clear key, and release the IAC motor Actuator test mode.

   NOTE: Unless the IAC motor is released, the Actuator test mode will continue for 27 minutes.
8. Turn the ignition switch to the "LOCK" (OFF) position.
9. Disconnect scan tool MB991958.
10. Start the engine again and let it idle for about 10 minutes. Check that the idling condition is normal.

FUEL PRESSURE TEST

M1131001901004

Required Special Tools:

- MB991958: Scan Tool (M.U.T.-III Sub Assembly)
  - MB991824: V.C.I.
  - MB991827: USB Cable
  - MB991911: Main Harness B
- MB991637: Fuel Pressure Gauge Set
- MD998709: Adaptor Hose
- MD998742: Hose Adaptor

1. Release residual pressure from the fuel line to prevent fuel spray. (Refer to P.13A-868.)

⚠ WARNING

To prevent a fire, cover the hose connection with shop towels to prevent splashing of fuel that could be caused by some residual pressure in the fuel pipe line.

2. Disconnect the fuel high-pressure hose at the fuel rail side.
3. Assemble the fuel pressure measurement tools as follows.

<When using the fuel pressure gauge>

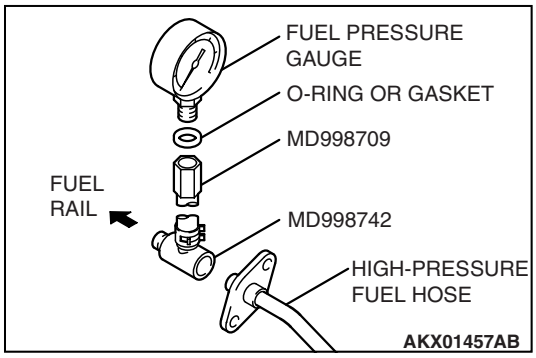

1. Remove the union joint and bolt from special tool MD998709 (adaptor hose) and instead attach special tool MD998742 (hose adaptor) to the adaptor hose.
2. Place a suitable O-ring or gasket on assembled special tools MD998709 and MD998742 and install the fuel pressure gauge.
3. Install the assembled fuel pressure measurement tools between the fuel rail and fuel high-pressure hose.

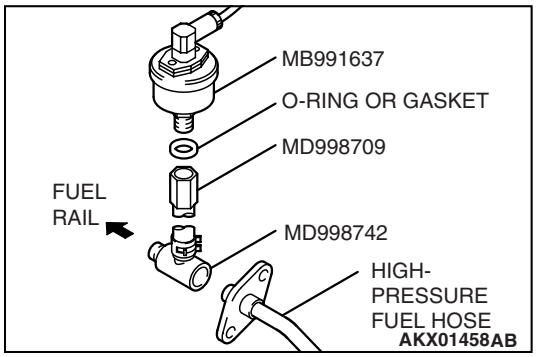

<When using the special tool MB991637 (fuel pressure gauge set)>

1. Remove the union joint and bolt from special tool MD998709 (adaptor hose) and instead attach special tool MD998742 (hose adaptor) to the adaptor hose.
2. Install special tool MB991637 (fuel pressure gauge set) to assembled special tools MD998709 and MD998742 via a gasket.
3. Install the assembled fuel pressure measurement tools between the fuel rail and the fuel high-pressure hose.

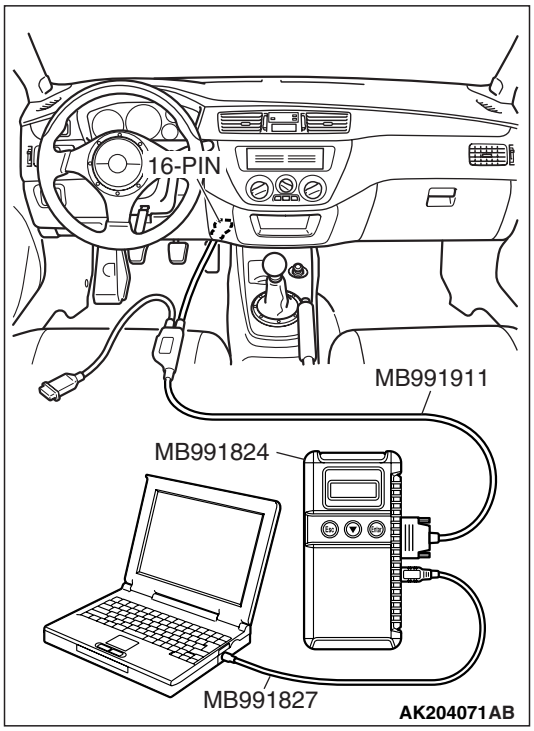

⚠ CAUTION

To prevent damage to scan tool MB991958, always turn the ignition switch to the "LOCK" (OFF) position before connecting or disconnecting scan tool MB991958.

4. Connect scan tool MB991958 to the data link connector.
5. Use the Actuator test 07 to drive the fuel pump. Check that there is no fuel leaking from any section when the fuel pump is operating.
6. Stop the fuel pump.
7. Start the engine and run at idle.
8. Measure fuel pressure while the engine is running at idle.

   Standard value: Approximately 230 kPa (67.9 in.Hg) at curb idle

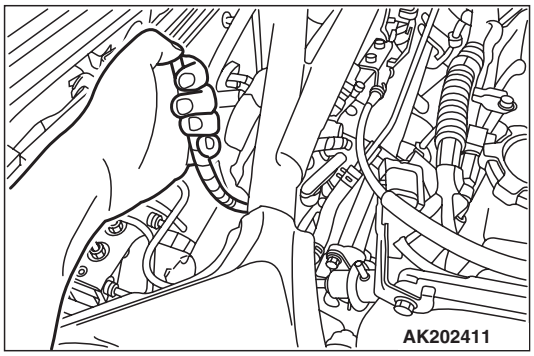

9. Disconnect the vacuum hose from the fuel pressure regulator and measure fuel pressure with the hose end closed with your finger.

   Standard value: 289 – 309 kPa (85.3 – 91.2 in.Hg) at curb idle

10. Check to see that fuel pressure at idle does not drop even after the engine has been revved several times.
11. Revving the engine repeatedly, hold the fuel return hose lightly with your fingers to feel that fuel pressure is present in the return hose.

    NOTE: If the fuel flow rate is low, there will be no fuel pressure in the return hose.

12. If any of fuel pressure measured in steps 8 to 11 is out of specification, troubleshoot and repair according to the table below.

SYMPTOM	PROBABLE CAUSE	REMEDY
• Fuel pressure too low • Fuel pressure drops after revving • No fuel pressure in fuel return hose	Clogged fuel filter	Replace fuel filter
	Fuel leaking to return side due to poor fuel regulator valve seating or settled spring	Replace fuel pressure regulator
	Low fuel pump delivery pressure	Replace fuel pump
Fuel pressure too high	Binding valve in fuel pressure regulator	Replace fuel pressure regulator
	Clogged fuel return hose or pipe	Clean or replace hose or pipe
Same fuel pressure when vacuum hose is connected and when disconnected	Damaged vacuum hose or clogged nipple	Replace vacuum hose or clean nipple
	Defective fuel pressure regulator	Replace fuel pressure regulator

13. Stop the engine and observe fuel pressure gauge reading. It is normal if the reading does not drop within two minutes. If it does, observe the rate of drop and troubleshoot and repair according to the table below. Start, then stop the engine.
    (1) Squeeze the fuel return line closed to confirm leak-down occurs from defective fuel pressure regulator.
    (2) Squeeze the fuel supply line closed to confirm leak-down occurs from defective fuel pump check valve.
    (3) If pressure continues to drop with both fuel lines squeezed closed, injector(s) are leaking.

SYMPTOM	PROBABLE CAUSE	REMEDY
Fuel pressure drops gradually after engine is stopped	Leaky injector	Replace injector
	Leaky fuel regulator valve seat	Replace fuel pressure regulator
Fuel pressure drops sharply immediately after engine is stopped	Check valve in fuel pump is held open	Replace fuel pump

14. Release residual pressure from the fuel pipe line. (Refer to P.13A-868.)

⚠ WARNING

Cover the hose connection with shop towels to prevent splash of fuel that could be caused by some residual pressure in the fuel pipe line.

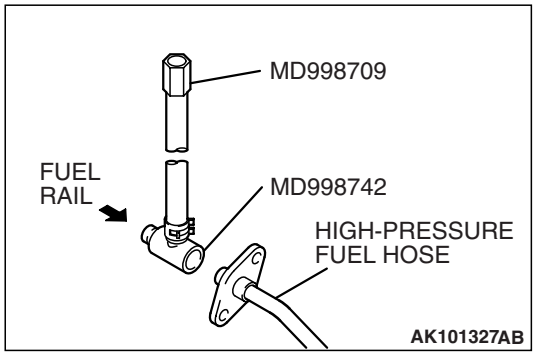

15. Remove the fuel pressure gauge or special tool MB991637, and special tools MD998709 and MD998742 from the fuel rail.
16. Replace the O-ring at the end of the fuel high-pressure hose with a new one.
17. Fit the fuel high-pressure hose into the fuel rail and tighten the bolts to specified torque.

Tightening torque: 5.0 ±1.0 (45 ±8 in-lb)

18.Check for fuel leaks.
   (1) Use scan tool MB991958 to operate the fuel pump.
   (2) Check the fuel line for leaks, and repair as needed.
19.Disconnect scan tool MB991958.

FUEL PUMP CONNECTOR DISCONNECTION (HOW TO REDUCE PRESSURIZED FUEL LINES)

M1131000900860

⚠ WARNING

When removing the fuel pipe, etc., release fuel pressure to prevent fuel spray.

1. Remove the rear seat assembly (Refer to GROUP 52A P.52A-22.)
2. Remove the protector.
3. Disconnect the fuel pump module connector.

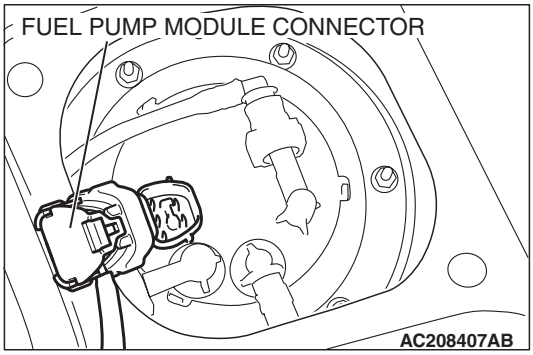

4. After starting the engine and letting it run until it stops naturally, turn the ignition switch to the "LOCK" (OFF) position.
5. Connect the fuel pump module connector.
6. Install the protector and rear seat assembly (Refer to GROUP 52A P.52A-22.)

FUEL PUMP OPERATION CHECK

M1131002000993

Required Special Tool:

- MB991958: Scan Tool (M.U.T.-III Sub Assembly)
  - MB991824: V.C.I.
  - MB991827: USB Cable
  - MB991911: Main Harness B

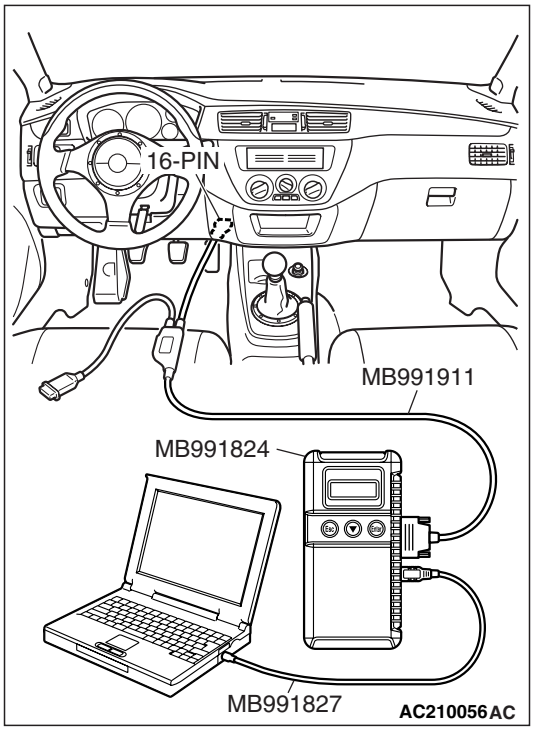

⚠ CAUTION

To prevent damage to scan tool MB991958, always turn the ignition switch to the "LOCK" (OFF) position before connecting or disconnecting scan tool MB991958.

1. Check the operating of the fuel pump by using scan tool MB991958 to force-drive the fuel pump.

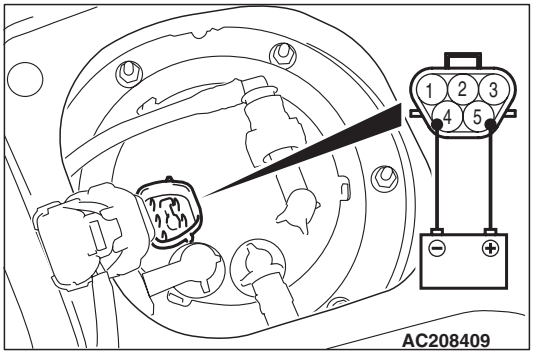

2. If the fuel pump will not operate, check by using the following procedure. If normal, check the fuel pump drive circuit.
   (1) Turn the ignition switch to the "LOCK" (OFF) position.
   (2) Remove the rear seat assembly (Refer to GROUP 52A P.52A-22.)
   (3) Remove the protector.
   (4) Disconnect the fuel pump module connector.
   (5) When the fuel pump drive connector is attached directly to the battery, check if the sound of the fuel pump operation can be heard.

   NOTE: As the fuel pump is an in-tank type, the fuel pump sound is hard to hear. Remove the fuel tank filler tube cap and check from the tank inlet.
   (6) Check for fuel pressure by pinching the fuel hose with fingertips.
   (7) Connect the fuel pump module connector.
   (8) Install the protector and rear seat assembly (Refer to GROUP 52A P.52A-22.)

MULTIPORT FUEL INJECTION (MFI) RELAY CONTINUITY CHECK

M1131050000475

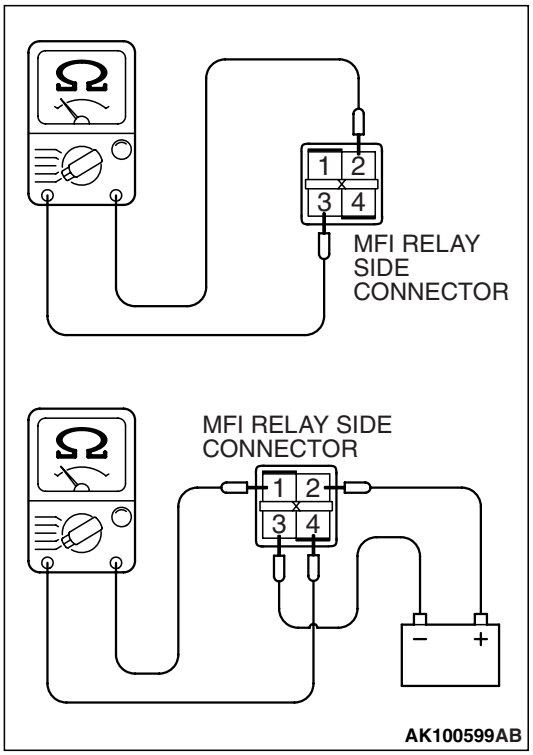

BATTERY VOLTAGE	TERMINAL NO. TO BE CONNECTED TO BATTERY	TERMINAL NO. TO BE CONDUCTED
Not supplied	–	2 – 3
Supplied	2 – 3	1 – 4

FUEL PUMP RELAY CONTINUITY CHECK

M1131033000773

<Fuel pump relay 1, 2>

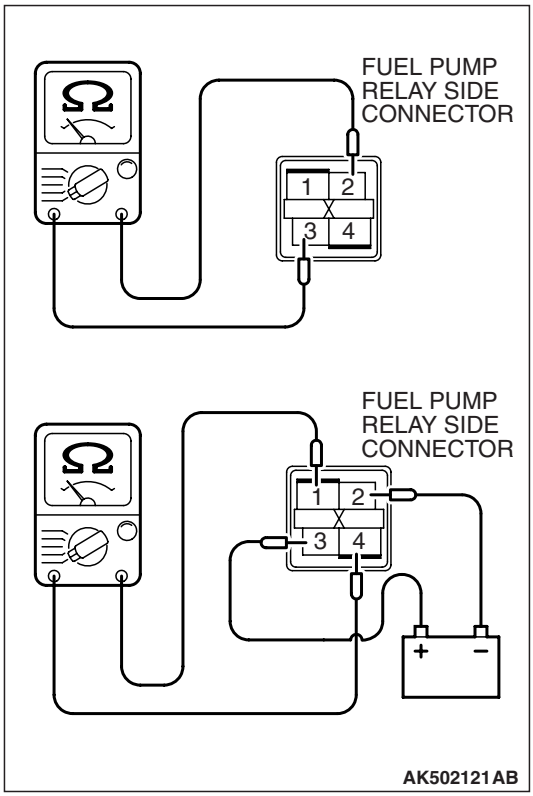

BATTERY VOLTAGE	TERMINAL NO. TO BE CONNECTED TO BATTERY	TERMINAL NO. TO BE CONDUCTED
Not supplied	–	2 – 3
Supplied	2 – 3	1 – 4

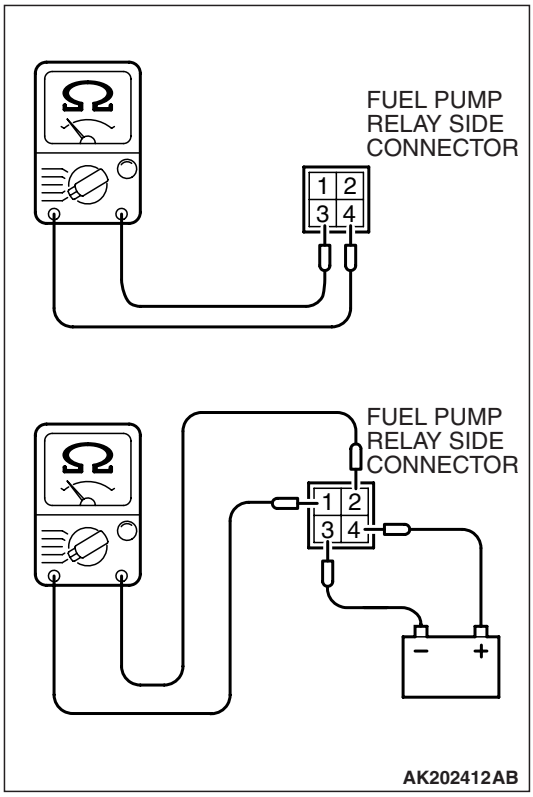

<Fuel pump relay 3>

TESTER CONNECTION TERMINALS	BATTERY VOLTAGE	NORMAL CONDITION
3 – 4	No supplied	Continuity
1 – 2	No supplied	Continuity
	Supplied (connect positive battery terminal No. 4 terminal and negative battery terminal to No. 3 terminal.	No continuity

FUEL PUMP RESISTOR CHECK

M1131052700038

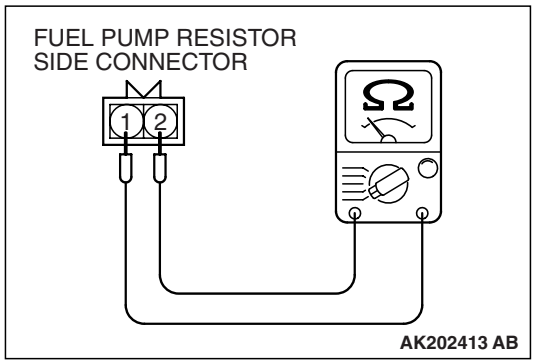

1. Disconnect the fuel pump resistor connector.
2. Measure the resistance between terminals.

   Standard value: 0.45 – 0.65 Ω [20° C (68° F)]
3. If the resistance is out of specification, replace the fuel pump resistor.

INTAKE AIR TEMPERATURE SENSOR CHECK

M1131002800717

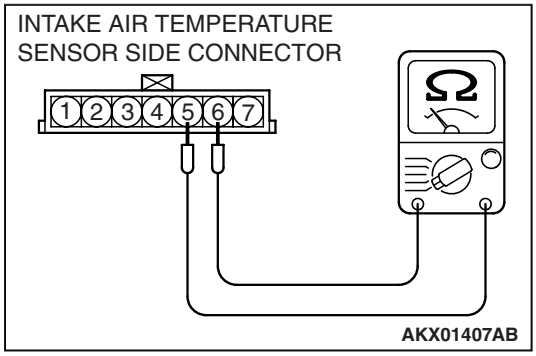

1. Disconnect the volume airflow sensor connectors.
2. Measure resistance between terminal No. 5 and No. 6.

   Standard value:
   13 – 17 kΩ [at – 20° C (– 4° F)]
   5.3 – 6.7 kΩ [at 0° C (32° F)]
   2.3 – 3.0 kΩ [at 20° C (68° F)]
   1.0 – 1.5 kΩ [at 40° C (104° F)]
   0.56 – 0.76 kΩ [at 60° C (140° F)]
   0.30 – 0.42 kΩ [at 80° C (176° F)]
3. If not within specifications, replace the volume airflow sensor.

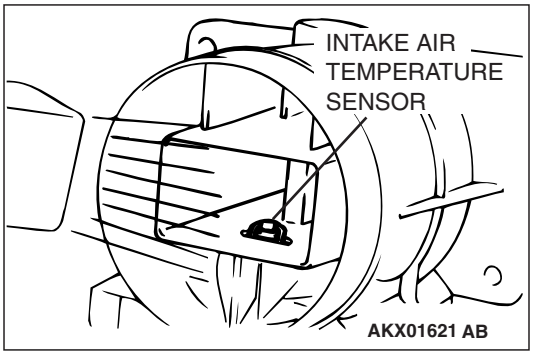

4. Measure resistance while heating the sensor using a hair dryer.

Normal condition:

TEMPERATURE	RESISTANCE (kΩ)
Higher	Smaller

5. If resistance does not decrease as heat increases, replace the volume airflow sensor assembly.

ENGINE COOLANT TEMPERATURE SENSOR CHECK

M1131003100670

⚠ CAUTION

Be careful not to touch the connector (resin section) with the tool when removing and installing.

1. Drain engine coolant, then remove the engine coolant temperature sensor.
2. With the temperature sensing portion of engine coolant temperature sensor immersed in hot water, check the resistance.

   Standard value:
   14 –17 kΩ [at – 20° C (– 4° F)]
   5.1 – 6.5 kΩ [at 0° C (32° F)]
   2.1 – 2.7 kΩ [at 20° C (68° F)]
   0.9 – 1.3 kΩ [at 40° C (104° F)]
   0.48 – 0.68 kΩ [at 60° C (140° F)]
   0.26 – 0.36 kΩ [at 80° C (176° F)]

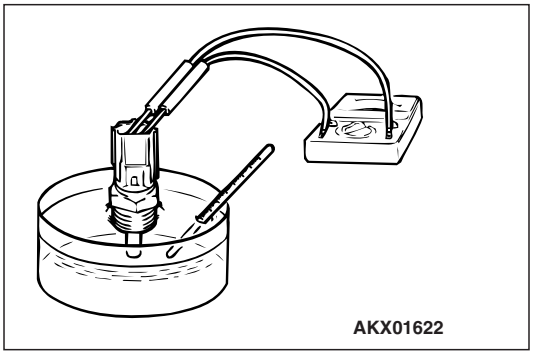

3. If resistance deviates from the standard value greatly, replace the sensor.
4. Apply 3M™ AAD part number 8731 or equivalent to threaded portion.
5. Install the engine coolant temperature sensor and tighten it to the specified torque.

   Tightening torque: 29 ±10 N· m (22 ±7 ft-lb)

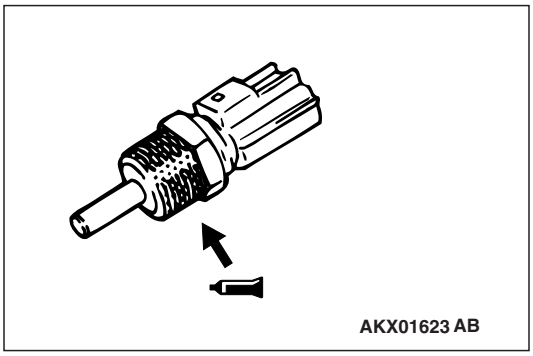

THROTTLE POSITION SENSOR CHECK

M1131003200730

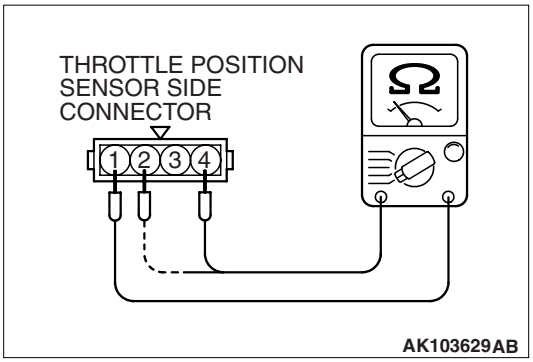

Required Special Tool:

- MB991348: Test Harness Set

Checking the Terminal Resistance

1. Disconnect the throttle position sensor connector.
2. Measure resistance between the throttle position sensor side connector terminal No. 1 and terminal No. 4.

   Standard value: 3.5 – 6.5 kΩ

3. Measure resistance between the throttle position sensor side connector terminal No. 1 and terminal No. 2.

Normal condition:

Throttle valve slowly open until fully open from the idle position	Changes smoothly in proportion to the opening angle of the throttle valve

4. If resistance is outside the standard value, or if it doesn't change smoothly, replace the throttle position sensor.

   NOTE: After replacement, the throttle position sensor should be adjusted. (Refer to P.13A-862.)

Check using oscilloscope

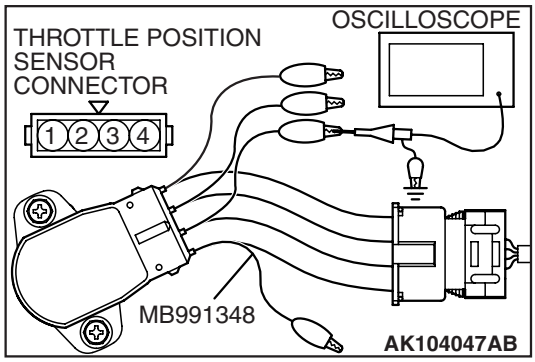

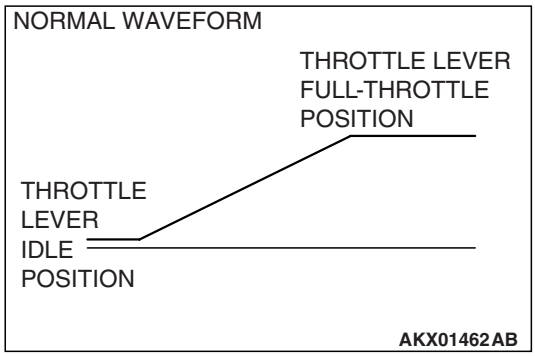

1. Disconnect the throttle position sensor connector and connect the test harness special tool (MB991348) in between. (All terminals should be connected.)
2. Connect the oscilloscope probe to the throttle position sensor side connector terminal.
3. Turn the ignition switch "ON" position.
4. Slowly move the throttle lever from the idle position to the full-throttle position and check then if the waveform is free from any noise.
5. If any noise is recognized, replace the throttle position sensor.

   NOTE: After replacement, the throttle position sensor should be adjusted. (Refer to P.13A-862.)

HEATED OXYGEN SENSOR CHECK

M1131005001133

Required Special Tools:

- MB991958 (M.U.T.-III Sub Assembly)
  - MB991824: V.C.I.
  - MB991827: USB Cable
  - MB991911: Main Harness B
- MB991658: Test Harness Set
- MD998464: Test Harness

<Heated oxygen sensor (front)>

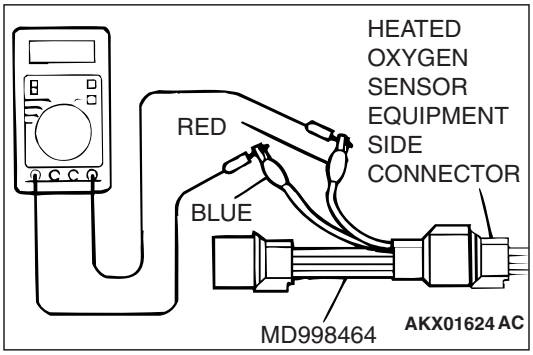

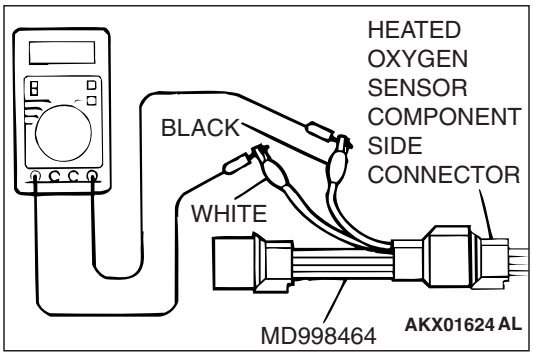

1. Using the scan tool MB991958, observe HO_2S reading. If values are unsatisfactory, or if Scan tool is not available, use the following procedure:
   (1) Disconnect the heated oxygen sensor connector and connect special tool MD998464 to the connector on the heated oxygen sensor side.
   (2) Make sure that there is continuity [4.5 – 8.0 ohms at 20° C (68° F)] between terminal No. 1 (red clip of special tool) and terminal No. 3 (blue clip of special tool) on the heated oxygen sensor connector
   (3) If there is no continuity, replace the heated oxygen sensor.
   (4) Warm up the engine until engine coolant is 80° C (176° F) or higher.
   (5) Perform a tracing for 5 minutes or more with the engine speed of 4,500 r/min.
   (6) Connect a digital voltage meter between terminal No. 2 (black clip of special tool) and terminal No. 4 (white clip of special tool).
2. While repeatedly revving the engine, measure the heated oxygen sensor output voltage.

   Standard value:

ENGINE	HEATED OXYGEN SENSOR OUTPUT VOLTAGE	REMARKS
When revving engine	0.6 – 1.0 volt	If you make the air/fuel ratio rich by revving the engine repeatedly, a normal heated oxygen sensor will output a voltage of 0.6 – 1.0 volt

⚠ CAUTION

- **Be very careful when connecting the jumper wire; incorrect connection can damage the oxygen sensor.**
- **Be careful the heater is broken when voltage of beyond 8volts is applied to the oxygen sensor heater.**

NOTE: If the sufficiently high temperature (of approximate 400°C or more) is not reached although the oxygen sensor is normal, the output voltage would be possibly low although the rich air-fuel ratio. Therefore, if the output voltage is low, use a jumper wire to connect the terminal No. 1 (red clip of special tool) and the terminal No. 3 (blue clip of special tool) of the oxygen sensor with a (+) terminal and (-) terminal of 8 volts power supply respectively, then check again.

3. If the sensor is defective, replace the heated oxygen sensor.

NOTE: For removal and installation of the heated oxygen sensor, refer to GROUP 15, Exhaust Pipe and Main Muffler *P.15-17*.

<Heated oxygen sensor (rear)>

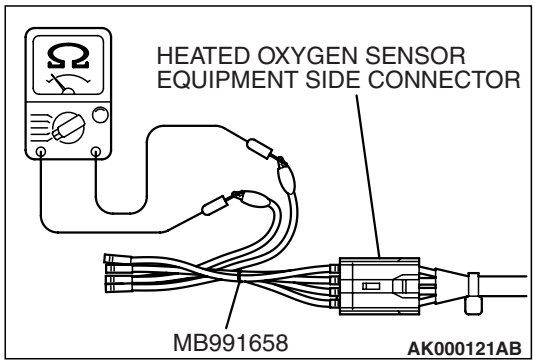

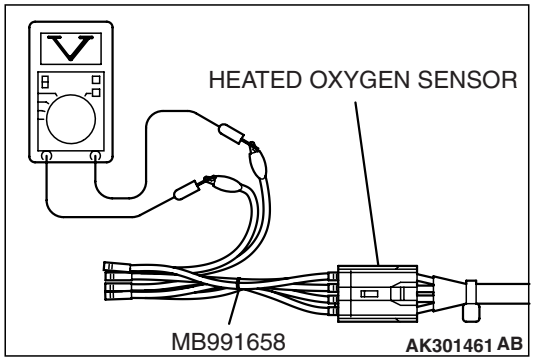

1. Using scan tool MB991958, observe HO_2S reading. If values are unsatisfactory, or if Scan tool is not available, use the following procedure:
   (1) Disconnect the heated oxygen sensor connector and connect special tool MB991658 to the connector on the heated oxygen sensor side.
   (2) Make sure that there is continuity [11 – 18 ohms at 20°C (68° F)] between terminal No. 5 and terminal No. 6 on the heated oxygen sensor connector
   (3) If there is no continuity, replace the heated oxygen sensor.
   (4) Warm up the engine until engine coolant is 80°C (176°F) or higher.
   (5) Perform a tracing for 5 minutes or more with the engine speed of 4,500 r/min.
   (6) Connect a digital voltage meter between terminal No. 3 and terminal No. 4.
2. While repeatedly revving the engine, measure the heated oxygen sensor output voltage.

   Standard value:

ENGINE	HEATED OXYGEN SENSOR OUTPUT VOLTAGE	REMARKS
When revving engine	0.6 – 1.0 volt	If you make the air/fuel ratio rich by revving the engine repeatedly, a normal heated oxygen sensor will output a voltage of 0.6 – 1.0 volt.

⚠ CAUTION

- **Be very careful when connecting the jumper wire; incorrect connection can damage the oxygen sensor.**
- **Be careful the heater is broken when voltage of beyond 8volts is applied to the oxygen sensor heater.**

NOTE: If the sufficiently high temperature (of approximate 400°C or more) is not reached although the oxygen sensor is normal, the output voltage would be possibly low although the rich air-fuel ratio. Therefore, if the output voltage is low, use a jumper wire to connect the terminal No. 2 and the terminal No. 1 of the oxygen sensor with a (+) terminal and (-) terminal of 8 volts power supply respectively, then check again.

3. If the sensor is defective, replace the heated oxygen sensor.

NOTE: For removal and installation of the heated oxygen sensor, refer to GROUP 15, Exhaust Pipe and Main Muffler P.15-17.

CLUTCH PEDAL POSITION SWITCH CHECK

M1131052600020

Refer to GROUP 21A, On-vehicle Service – Clutch Pedal Position Switch Check P.21A-8.

INJECTOR CHECK

M1131005200769

Measurement of Resistance between Terminals

1. Disconnect the injector connector.
2. Measure resistance between terminals.

   Standard value: 2 – 3 ohms [at 20°C (68°F)]

3. If not within specification, replace the injector.
4. Install the injector connector

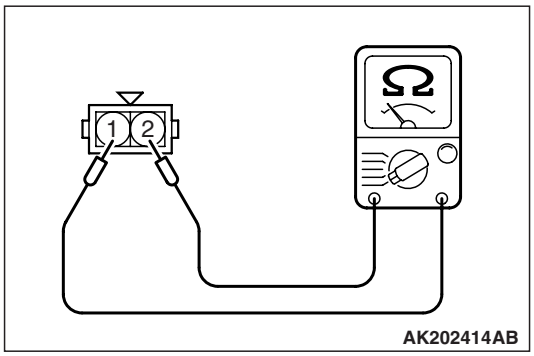

Checking operation sound

Using a stethoscope or long blade screwdriver, check the operation sound ("tick-tick-tick") of injectors during idling or during cranking. Check that as the engine speed increases, the frequency of the operating sound also increases.

1. If the injector you are checking is not operating, you may hear the operating sound of the other injectors.
2. If no operating sound is heard from the injector that is being checked, check the injector drive circuit. If there is nothing wrong with the circuit, a defective injector or engine control module (ECM) is suspected.

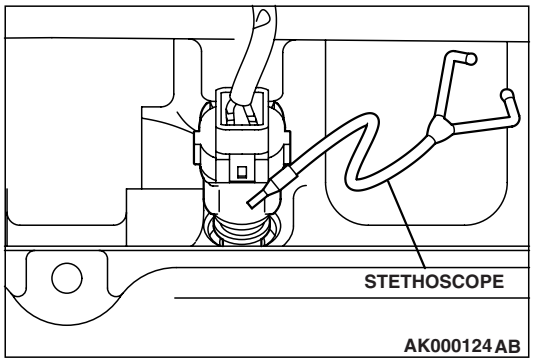

INJECTOR RESISTOR CHECK

M1131052800035

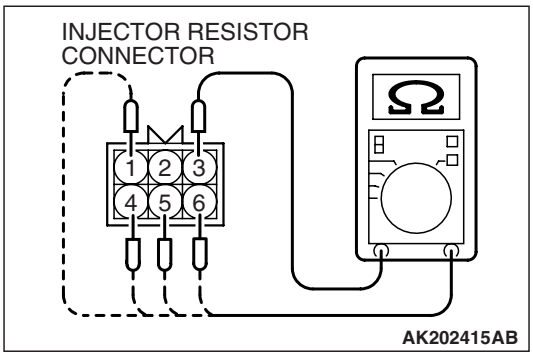

1. Disconnect the injector resistor connector.
2. Measure the resistance between terminals.

Measure terminals	Resistance
1 – 3 4 – 3 5 – 3 6 – 3	5.8 – 6.2 Ω [At 20° C (68° F)]

3. If the resistance is out of specification, replace the injector resistor.

IDLE AIR CONTROL MOTOR (STEPPER MOTOR) CHECK

M1131005400688

Required Special Tool:

- MB991709: Test Harness Set

Checking the Operation Sound

1. Check that the engine coolant temperature is 20° C (68° F) or below.

   NOTE: If necessary, you can disconnect the engine coolant temperature sensor connector and connect the harness-side of the connector to another engine coolant temperature sensor that is at 20°C (68°F) or below.
2. Check that the operation sound of the stepper motor can be heard after the ignition is switched ON (but do not start the engine).
3. If the operation sound cannot be heard, check the stepper motor's activation circuit. If the circuit is normal, it is probable that there is a malfunction of the stepper motor or engine control module (ECM).

Checking the Coil Resistance

1. Disconnect the idle air control motor connector.

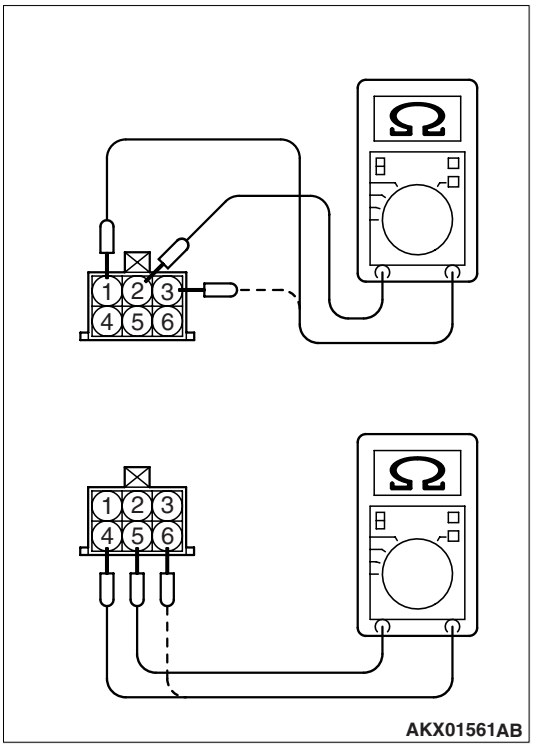

2. Measure resistance between terminal No. 2 and either terminal No. 1 or terminal No. 3 of the connector at the idle air control motor side.

   Standard value: 28 – 33 Ω [at 20° C (68° F)]

3. If resistance is not within the standard value, replace the IAC motor.
4. Measure the resistance between terminal No. 5 and either terminal No. 6 or terminal No. 4 of the connector at the idle air control motor side.

   Standard value: 28 – 33 Ω [at 20° C (68° F)]

5. If resistance is not within the standard value, replace the IAC motor.

<Operation Check>

1. Remove the throttle body.
2. Remove the idle air control motor.
3. Connect special tool MB991709 to the idle air control motor connector.

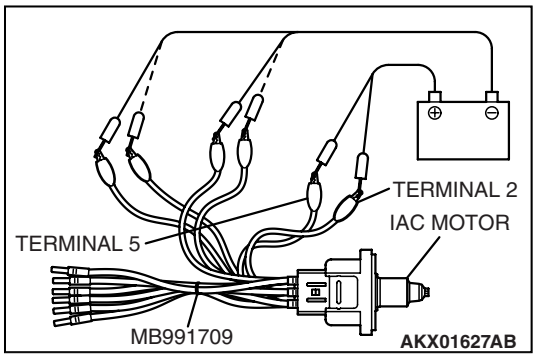

4. Connect the positive battery terminal of a power supply (approximately 6 volts) to terminal No. 2 and the terminal No. 5.
5. Connect the negative battery terminal of the power supply to each clip as described in the following steps. Then check whether or not the stepper motor vibrates slightly as it operates.
   (1) Connect the negative terminal of the power supply to terminal No. 1 and terminal No. 4.
   (2) Connect the negative terminal of the power supply to terminal No. 3 and terminal No. 4.
   (3) Connect the negative terminal of the power supply to terminal No. 3 and terminal No. 6.
   (4) Connect the negative terminal of the power supply to terminal No. 1 and terminal No. 6.
   (5) Connect the negative terminal of the power supply to terminal No. 1 and terminal No. 4.
   (6) Repeat the tests in sequence from (5) to (1) to test opposite movement of the IAC.

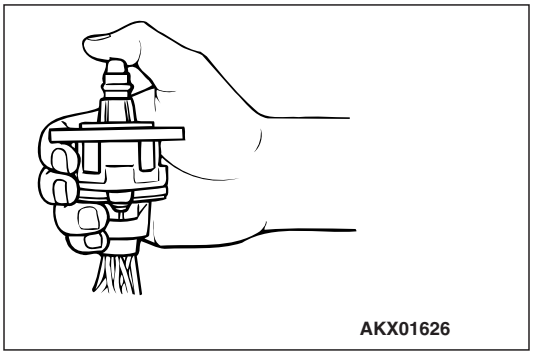

6. If vibration is detected during the test, the stepper motor can be considered to be normal.

OIL FEEDER CONTROL VALVE CHECK

M1131053200326

Checking the Operation Sound

1. Disconnect the oil feeder control valve connector.

⚠ CAUTION

To prevent the coil from burning, keep the duration of the voltage application as short as possible.

2. Check that the operation sound of the oil feeder control valve can be heard when the positive battery voltage is supplied to the oil feeder control valve. (Use the jumper wires to connect terminal No. 2 of the oil feeder control valve connector to the positive battery terminal and terminal No. 1 to the negative battery terminal.)
3. If the operation sound cannot be heard, replace the oil feeder control valve.

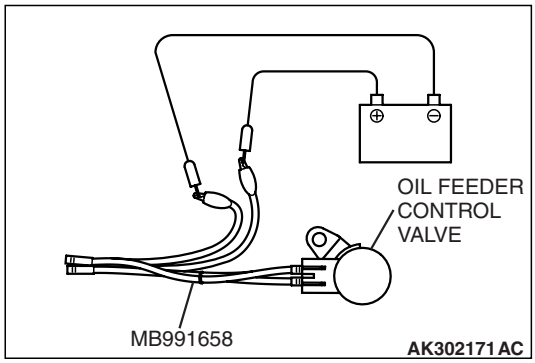

Checking the Coil Resistance

1. Disconnect the oil feeder control valve connector.
2. Measure resistance between terminal No. 1 and terminal No. 2 of the connector at the oil feeder control valve side.

   Standard value: 6.9 – 7.9 ohms [at 20° C (68° F)]

3. If resistance is not within the standard value, replace the oil feeder control valve.

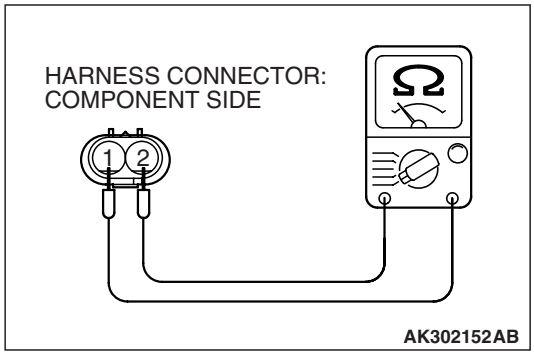

FUEL PRESSURE SOLENOID CHECK

M1131052900032

NOTE: When disconnecting the vacuum hose, always make a mark so that if can be reconnected at original position.

1. Disconnect the vacuum hose from the solenoid valve.
2. Disconnect the harness connector.

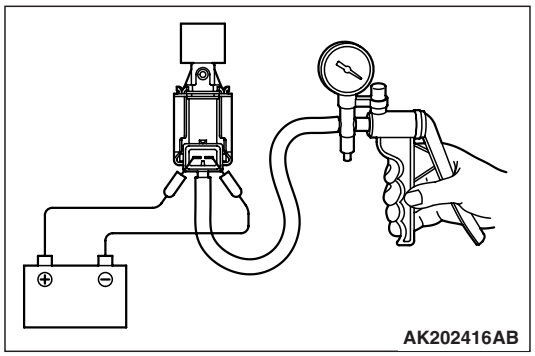

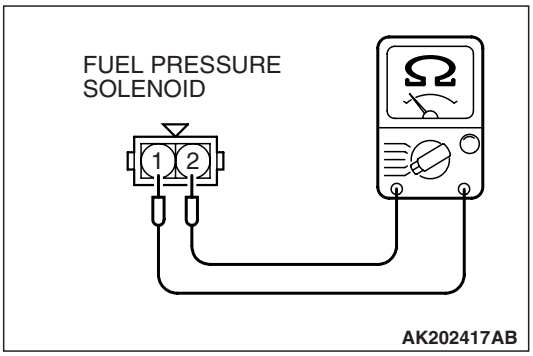

3. Connect a hand vacuum pump to the nipple.
4. Connect a battery to the solenoid valve and apply a vacuum to check air-tightness.

BATTERY VOLTAGE	B nipple	Normal condition
Not applied	Open	Vacuum leak
	Close	Vacuum maintained
Applied	Open	Vacuum maintained

5. Measure the resistance between the terminals of the solenoid valve.

   Standard value: 29 – 35 Ω [at 20 °C (68° F)]
6. If resistance is not within the standard valve, replace the fuel pressure solenoid.

EVAPORATIVE EMISSION PURGE SOLENOID CHECK

M1131005600336

Refer to GROUP 17, Emission Control System –Evaporative Emission Control System –Evaporative Emission Purge Solenoid Check P.17-14.

EGR VACUUM REGULATOR SOLENOID VALVE CHECK

M1131005700281

Refer to GROUP 17, Emission Control System –Exhaust Gas Recirculation (EGR) System –EGR Vacuum Regulator Solenoid Valve Check P.17-19.

EVAPORATVE EMISSION VENTILATION SOLENOID CHECK

M1131012800291

Refer to GROUP 17, Emission Control System –Evaporative Emission Canister and Fuel Tank Pressure Relief Valve –Fuel Tank Pressure Relief Valve Inspection P.17-22.

TURBOCHARGER WASTEGATE SOLENOID CHECK

M1131053000021

Refer to GROUP 15, On-vehicle Service –Turbocharger Wastegate Solenoid Check P.15-5.

INJECTOR

REMOVAL AND INSTALLATION

M1131007101062

Pre-removal Operation	Post-installation Operation
• Fuel Discharge Prevention (Refer to P.13A-868.) • Strut Tower Bar Removal (Refer to GROUP 42, Strut Tower Bar P.42-12.) • Air Hose E, Air By-pass Hose, Air Pipe C Removal (Refer to GROUP 15, Charge Air Cooler P.15-8.)	• Air Hose E, Air By-pass Hose, Air Pipe C Installation (Refer to GROUP 15, Charge Air Cooler P.15-8.) • Strut Tower Bar Installation (Refer to GROUP 42, Strut Tower Bar P.42-12.) • Fuel Leakage Check

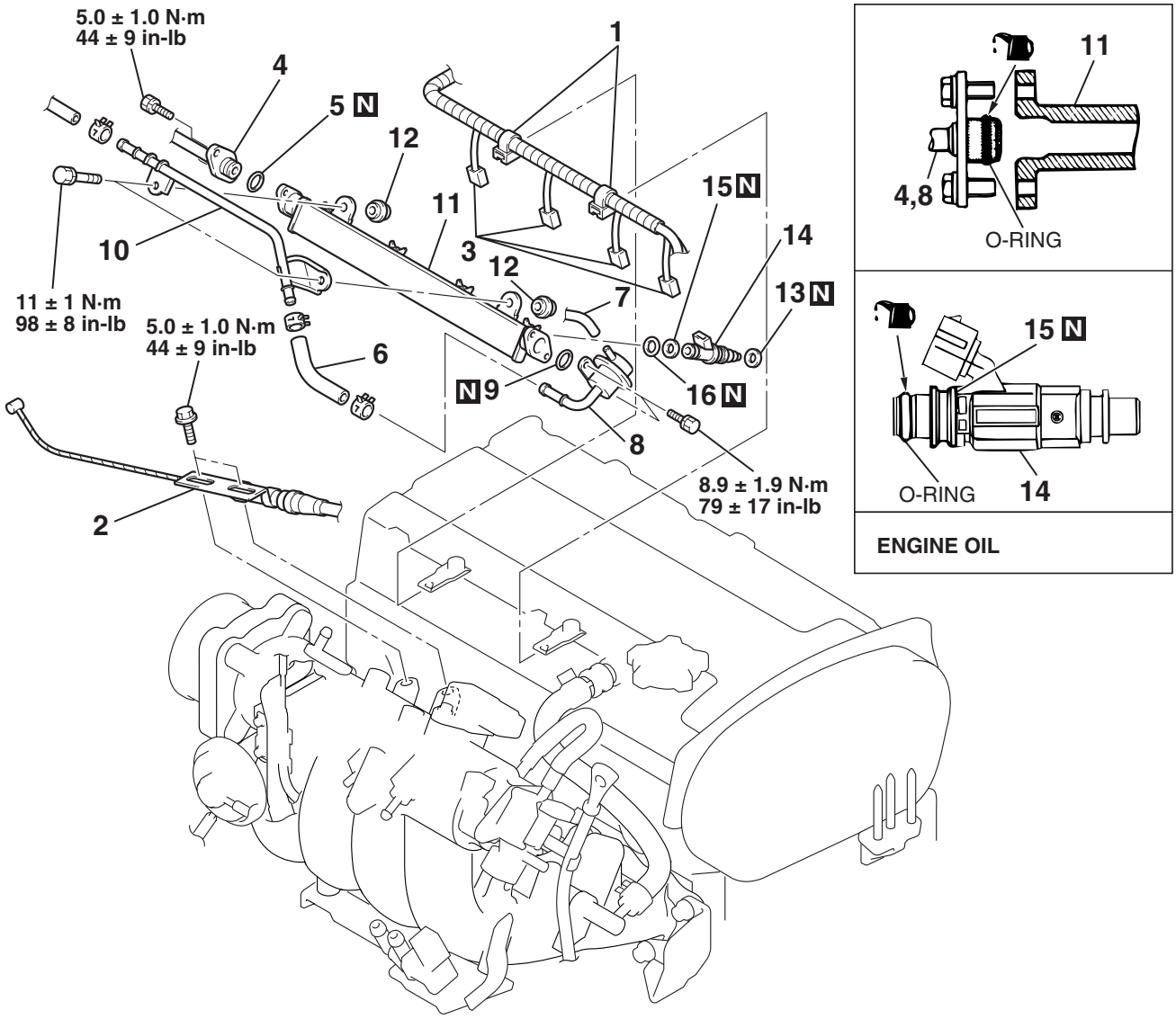

AC210060AB

REMOVAL STEPS

1. CONTROL HARNESS CONNECTOR
2. ACCELERATOR CABLE ASSEMBLY CONNECTION (THROTTLE BODY SIDE)
3. INJECTOR CONNECTOR

>>A<< 4. FUEL HIGH-PRESSURE HOSE CONNECTION

5. O-RING

REMOVAL STEPS (Continued)

6. FUEL RETURN HOSE CONNECTION
7. VACUUM HOSE CONNECTION

>>A<< 8. FUEL PRESSURE REGULATOR

9. O-RING
10. FUEL RETURN PIPE

<<A>> 11. FUEL RAIL

12. INSULATORS
13. INSULATORS

<<A>> >>A<< 14 INJECTORS

TSB Revision

REMOVAL STEPS (Continued)

15. GROMMETS
16. O-RING

REMOVAL SERVICE POINT

<<A>> FUEL RAIL/INJECTORS REMOVAL

⚠ CAUTION

Do not drop the injector.

Remove the fuel rail with the injectors attached to it.

INSTALLATION SERVICE POINT

>>A<< INJECTORS/FUEL PRESSURE REGULATOR/FUEL HIGH-PRESSURE HOSE INSTALLATION

⚠ CAUTION

Do not let the engine oil get into the fuel rail will be damaged.

1. Apply a drop of new engine oil to the O-ring.
2. Turn the injector to the right and left to install to the fuel rail. Repeat for fuel pressure regulator and fuel high-pressure hose. Be careful not to damage the O-ring. After installing, check that the item turns smoothly.
3. If it does not turn smoothly, the O-ring may be pinched, remove the item, re-install it into the fuel rail and check again.
4. Tighten the fuel pressure regulator and fuel high-pressure hose to the specified torque.

   Tightening torque:

   8.9 ±1.9 N· m (79 ±17 in-lb) <Fuel pressure regulator>

   5.0 ±1.0 N· m (44 ±9 in-lb) <Fuel high-pressure hose>

THROTTLE BODY ASSEMBLY

REMOVAL AND INSTALLATION

M1131007701279

⚠ CAUTION

When the throttle body assembly replacement is performed, use scan tool MB991958 to initialize the learning value (Refer to GROUP 00, Initialization Procedure for Learning Value in MFI Engine P.00-22).

Pre-removal Operation	Post-installation Operation
• Under Cover Removal (Refer to GROUP 51, Front Bumper P.51-2.) • Engine Coolant Draining [Refer to GROUP 00, Maintenance Service –Engine Coolant (Change) P.00-48.] • Strut Tower Bar Removal (Refer to GROUP 42, Strut Tower Bar P.42-12.) • Air Hose E, Air By-pass Hose, Air Pipe C Removal (Refer to GROUP 15, Charge Air Cooler P.15-8.)	• Air Hose E, Air By-pass Hose, Air Pipe C Installation (Refer to GROUP 15, Charge Air Cooler P.15-8.) • Strut Tower Bar Installation Refer to GROUP 42, Strut Tower Bar P.42-12.) • Engine Coolant Refilling [Refer to GROUP 00, Maintenance Service –Engine Coolant (Change) P.00-48.] • Accelerator Cable Adjustment (Refer to GROUP 17, On-vehicle Service – Accelerator Cable Check and Adjustment P.17-4.)

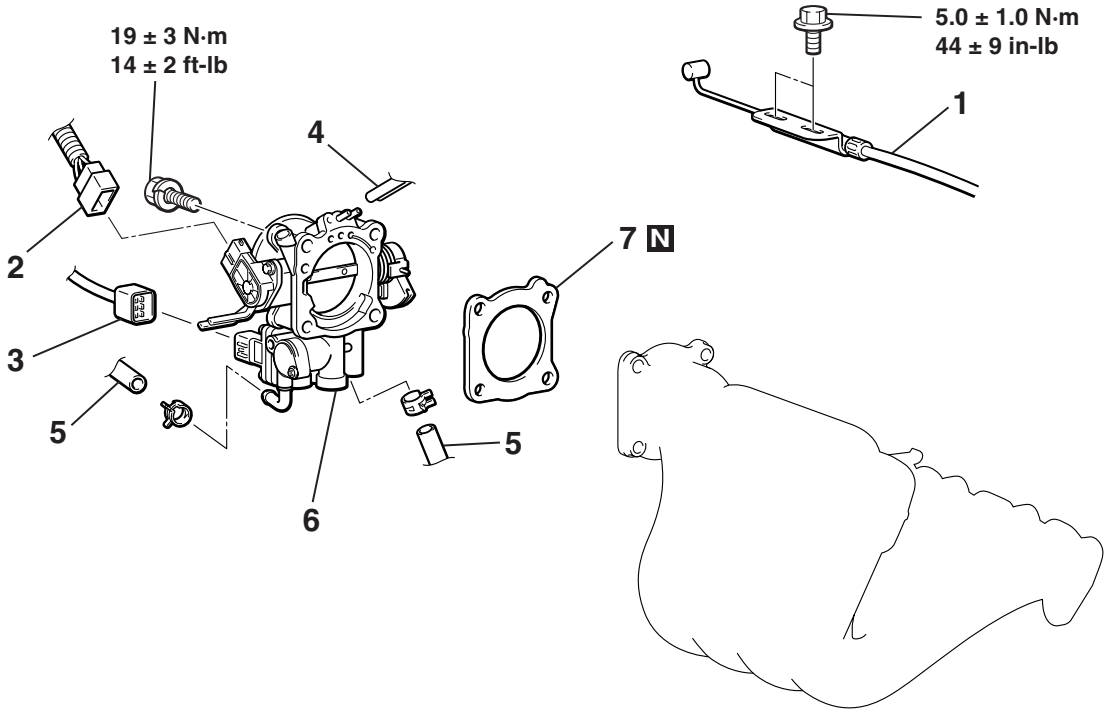

AC208435AB

REMOVAL STEPS

1. ACCELERATOR CABLE CONNECTION
2. THROTTLE POSITION SENSOR CONNECTOR
3. IDLE AIR CONTROL MOTOR CONNECTOR

REMOVAL STEPS (Continued)

4. VACUUM HOSE CONNECTION
5. WATER HOSE CONNECTION
6. THROTTLE BODY ASSEMBLY

>>**A**<< 7. THROTTLE BODY GASKET

INSTALLATION SERVICE POINT

>>A<<THROTTLE BODY GASKET INSTALLATION

⚠ CAUTION

Poor idling etc. may result if the throttle body gasket is installed incorrectly.

Install the throttle body gasket as shown in the illustration.

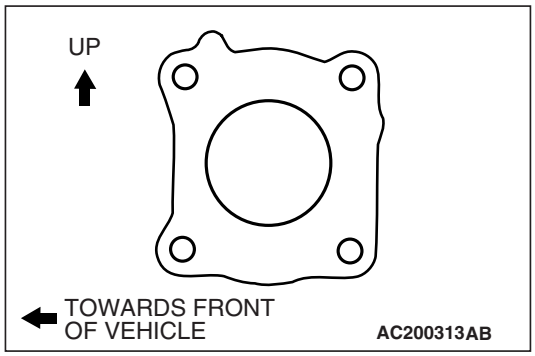

DISASSEMBLY AND ASSEMBLY

M1131009700636

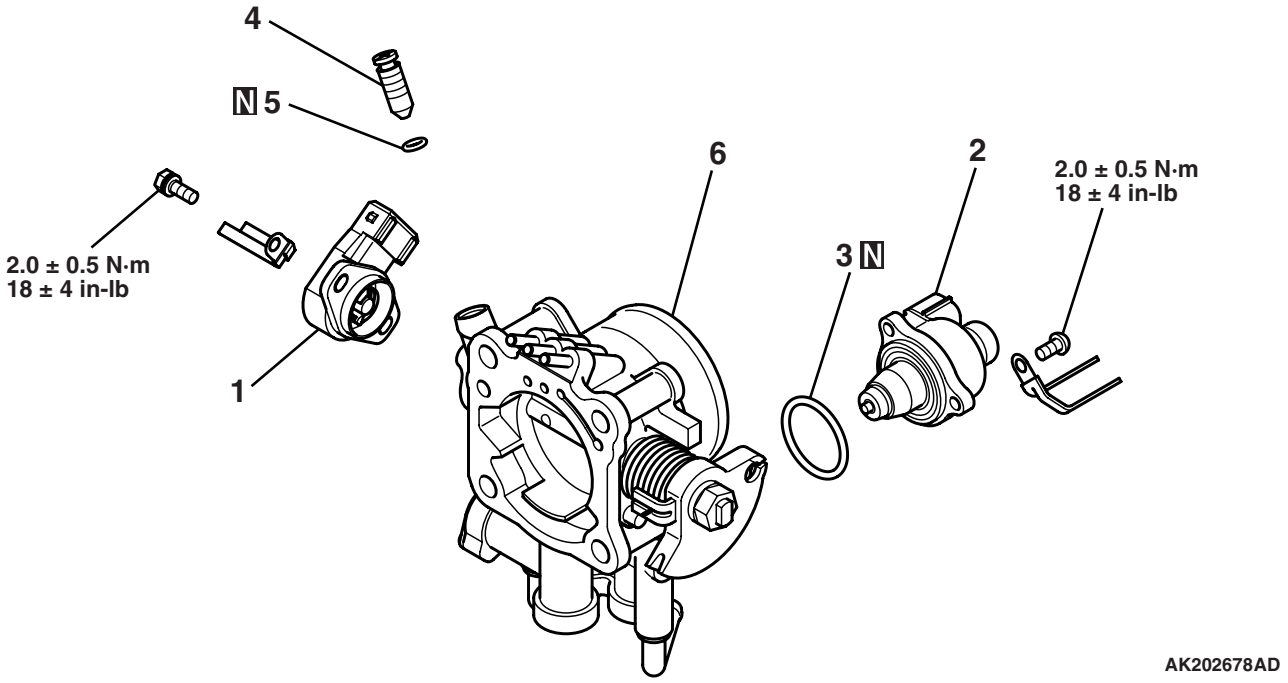

Disassembly steps

>>**A**<< 1. THROTTLE POSITION SENSOR (TPS)
2. IDLE SPEED CONTROL SERVO
3. O-RING

Disassembly steps (Continued)

4. FIXED SPEED ADJUSTING SCREW (SAS)
5. O-RING
6. THROTTLE BODY

REASSEMBLY SERVICE POINTS

>>A<< THROTTLE POSITION SENSOR (TPS) INSTALLATION

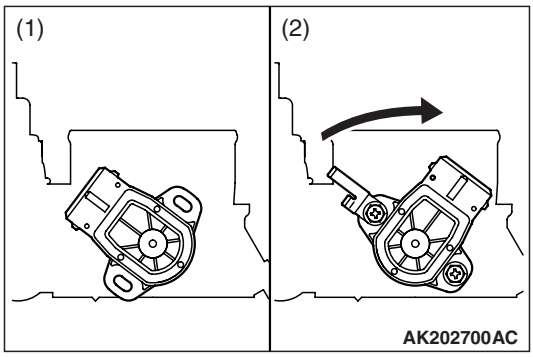

1. Place the TPS in the throttle body in the position shown in (1) of the drawing.
2. Turn the TPS to the position shown in (2) of the drawing. Connect a circuit tester between terminal 2 (TPS output) and terminal 4 (earth) of the TPS to measure the output voltage. Turn the TPS to a position where the output voltage is within the standard value range, and secure the TPS there by tightening the screw.

   Standard value 0.535 – 0.735 V

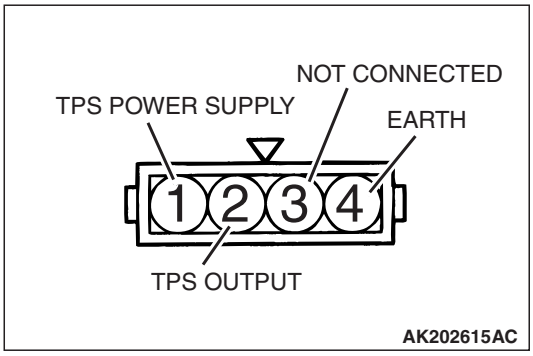

3. After tightening the screw, check the output voltage again. If the voltage is out of the standard value range, loosen the screw and adjust the TPS position for a proper output voltage, then tighten the screw. If necessary, repeat the adjustment until a correct voltage is reached.
4. Connect a circuit tester between terminal 1 (TPS power supply) and terminal 2 (TPS output). Check that the resistance reading varies smoothly as the throttle valve is moved slowly to the wide open position.

ENGINE CONTROL RESISTOR, RELAY

REMOVAL AND INSTALLATION

M1131034600035

Pre-removal Operation	Post-installation Operation
• Strut Tower Bar Removal (Refer to GROUP 42, Strut Tower Bar P.42-12.) • Harness Connector Disconnection	• Harness Connector Connection • Strut Tower Bar Installation (Refer to GROUP 42, Strut Tower Bar P.42-12.)

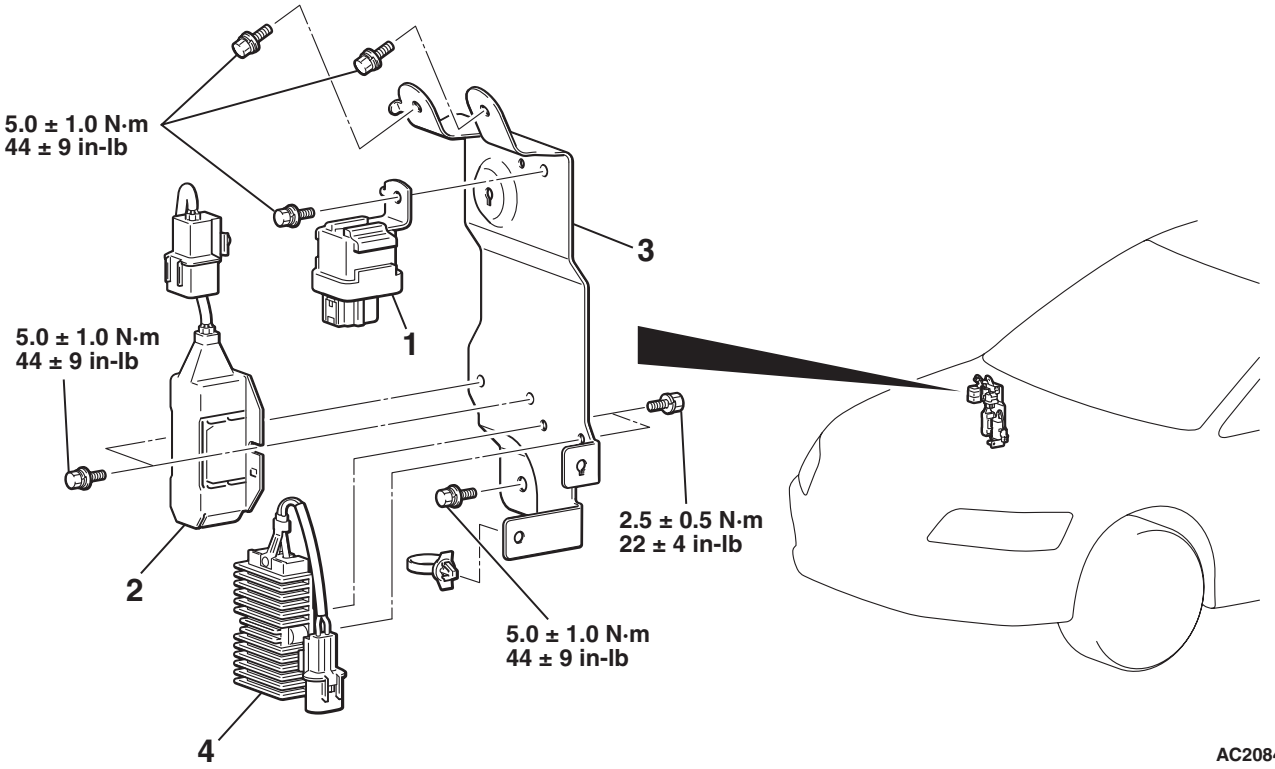

REMOVAL STEPS

1. FUEL PUMP RELAY
2. INJECTOR RESISTOR

REMOVAL STEPS (Continued)

3. BRACKET
4. FUEL PUMP CIRCUIT RESISTOR

ENGINE CONTROL MODULE (ECM)

REMOVAL AND INSTALLATION

M1131033800252

⚠ CAUTION

When the engine-ECU replacement is performed, always refer to GROUP 54A, General Description – Immobilizer System – Caution When Replacing Immobilizer System Related Parts P.54A-6.

Pre-removal and Post-installation Operation
- Glove Box Assembly Removal and Installation (Refer to GROUP 52A, Interior P.52A-3.)
- Harness Cover Removal and Installation (Refer to GROUP 52A, Interior P.52A-3.)

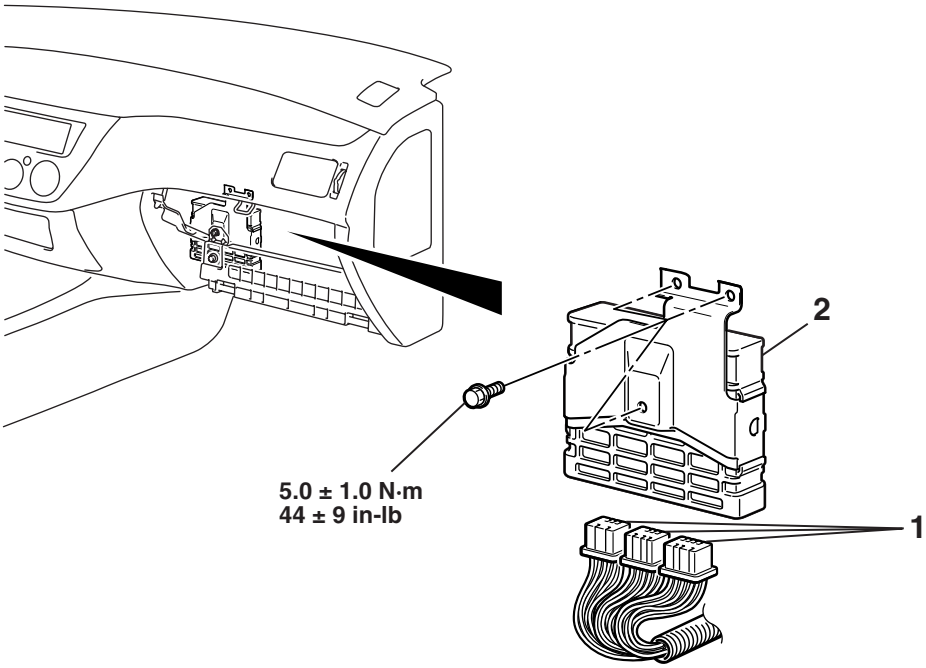

AC505253AC

REMOVAL STEPS

1. ECM CONNECTORS
2. ECM

SPECIFICATIONS

FASTENER TIGHTENING SPECIFICATIONS

M1131011600603

ITEM	SPECIFICATION
Accelerator cable mounting bolts	5.0 ±1.0 N· m (44 ±9 in-lb)
Bracket mounting bolts	5.0 ±1.0 N· m (44 ±9 in-lb)
ECM mounting bolts	5.0 ±1.0 N· m (44 ±9 in-lb)
Fuel pressure regulator mounting bolts	8.9 ±1.9 N· m (79 ±17 in-lb)
Fuel pump relay mounting bolt	5.0 ±1.0 N· m (44 ±9 in-lb)
Fuel pump circuit resistor mounting bolts	2.5 ±0.5 N· m (22 ±4 in-lb)
Fuel rail mounting bolts	11 ±1 N· m (98 ±8 in-lb)
Fuel high-pressure hose mounting bolts	5.0 ±1.0 N· m (44 ±9 in-lb)
Injector resistor mounting bolts	5.0 ±1.0 N· m (44 ±9 in-lb)
Throttle body mounting bolt	19 ±3 N· m (14 ±2 ft-lb)

GENERAL SPECIFICATIONS

M1131000200980

ITEMS		SPECIFICATIONS
Throttle body	Throttle bore mm (in.)	60 (2.4)
	Throttle position sensor	Variable resistor type
	Idle air control motor	Stepper motor (stepper motor type by-pass air control system)
Engine control module (ECM)	Identification model No.	E6T46972
Sensors	Volume airflow sensor	Karman vortex type
	Barometric pressure sensor	Semiconductor type
	Intake air temperature sensor	Thermistor type
	Engine coolant temperature sensor	Thermistor type
	Heated oxygen sensor	Zirconia type
	Vehicle speed sensor	Electromagnetic resistance element type
	Camshaft position sensor	Hall element type
	Crankshaft position sensor	Hall element type
	Knock sensor	Piezoelectric type
	Power steering pressure switch	Contact switch type
	Manifold absolute pressure sensor	Semiconductor type

ITEMS		SPECIFICATIONS
Actuators	Multiport fuel injection (MFI) relay	Contact switch type
	Fuel pump relay	Contact switch type
	Injector type and number	Electromagnetic type, 4
	Injector identification mark	MDL560P
	EGR vacuum regulator solenoid valve	Duty cycle type solenoid valve
	Evaporative emission purge solenoid	Duty cycle type solenoid valve
	Fuel pressure solenoid	ON/OFF type solenoid
	Turbocharger wastegate solenoid	Duty cycle type solenoid
Fuel pressure regulator	Regulator pressure kPa (in.Hg)	294 (86.8)

SERVICE SPECIFICATIONS

M1131000301463

ITEMS		STANDARD VALUE
Throttle position sensor adjusting voltage mV		535 – 735
Basic idle speed r/min		850 ±50
Fuel pressure kPa (psi)	Vacuum hose disconnected	289 – 309 (42 – 45) at curb idle
	Vacuum hose connected	Approximately 230 (33) at curb idle
Intake air temperature sensor resistance kΩ	– 20° C (– 4° F)	13 – 17
	0° C (32° F)	5.3 – 6.7
	20° C (86° F)	2.3 – 3.0
	40° C (104° F)	1.0 – 1.5
	60° C (140° F)	0.56 – 0.76
	80° C (176° F)	0.30 – 0.42
Engine coolant temperature sensor resistance kΩ	– 20° C (– 4° F)	14 – 17
	0° C (32° F)	5.1 – 6.5
	20° C (86° F)	2.1 – 2.7
	40° C (104° F)	0.9 – 1.3
	60° C (140° F)	0.48 – 0.68
	80° C (176° F)	0.26 – 0.36
Throttle position sensor resistance kΩ		3.5 – 6.5
Heated oxygen sensor output voltage V		0.6 – 1.0
Heated oxygen sensor heater resistance Ω	<Front>	4.5 – 8.0
	<Rear>	11 – 18
Injector coil resistance Ω		2 – 3 [at 20° C (68° F)]
Idle air control motor coil resistance Ω		28 – 33 [at 20° C (68° F)]
Fuel pressure solenoid coil resistance Ω		29 – 35 [at 20° C (68° F)]
Injector resistor resistance Ω		5.5 – 6.5 [at 20° C (68° F)]
Fuel pump resistor resistance Ω		0.45 – 0.65 [at 20° C (68° F)]
Oil feeder control valve coil resistance Ω		6.9 – 7.9 [at 20° C (68° F)]

SEALANT AND ADHESIVE

M1131000500776

ITEM	SPECIFIED SEALANT
Engine coolant temperature sensor threaded portion	3M™ AAD part number 8731 or equivalent