GROUP 55

HEATING AND AIR CONDITIONING

CONTENTS

GENERAL INFORMATION 55-3

MANUAL A/C DIAGNOSIS 55-4
- INTRODUCTION TO MANUAL A/C DIAGNOSIS 55-4
- MANUAL A/C DIAGNOSTIC TROUBLESHOOTING STRATEGY 55-5
- SYMPTOM CHART. 55-5
- SYMPTOM PROCEDURES 55-5
- CHECK AT ECU TERMINAL 55-18
- TROUBLESHOOTING HINT. 55-19

SPECIAL TOOLS. 55-20

ON-VEHICLE SERVICE. 55-20
- REFRIGERANT LEVEL TEST 55-20
- MAGNETIC CLUTCH TEST 55-20
- RECEIVER DRIER TEST 55-21
- PRESSURE SWITCH CHECK 55-21
- COMPRESSOR DRIVE BELT ADJUSTMENT 55-21
- CHARGING 55-21
- PERFORMANCE TEST 55-22
- REFRIGERANT LEAK REPAIR PROCEDURE. 55-23
- COMPRESSOR NOISE CHECK 55-24
- POWER RELAY CHECK 55-24
- IDLE-UP OPERATION CHECK 55-26

HEATER CONTROL ASSEMBLY AND A/C SWITCH 55-26
- REMOVAL AND INSTALLATION 55-26
- INSPECTION. 55-29

HEATER UNIT, HEATER CORE, BLOWER ASSEMBLY, EVAPORATOR UNIT . . 55-30
- REMOVAL AND INSTALLATION 55-30

BLOWER ASSEMBLY AND RESISTOR 55-32
- REMOVAL AND INSTALLATION 55-32
- INSPECTION. 55-32

COMPRESSOR ASSEMBLY AND TENSION PULLEY 55-34
- REMOVAL AND INSTALLATION 55-34
- INSPECTION. 55-36
- COMPRESSOR MAGNETIC CLUTCH OPERATION INSPECTION 55-36
- REVOLUTION PICK-UP SENSOR CHECK 55-37
- MAGNETIC CLUTCH 55-37

CONDENSER AND CONDENSER FAN MOTOR. 55-40
- REMOVAL AND INSTALLATION 55-40
- INSPECTION. 55-41

REFRIGERANT LINE 55-42
- REMOVAL AND INSTALLATION 55-42

VENTILATORS 55-44
- REMOVAL AND INSTALLATION 55-44

SPECIFICATIONS 55-45
FASTENER TIGHTENING SPECIFICATIONS 55-45
GENERAL SPECIFICATIONS 55-46
SERVICE SPECIFICATIONS 55-46
LUBRICANTS 55-46

GENERAL INFORMATION

M1552000100050

The heater system uses a two-way-flow full-air-mix system that features high performance and low operating noise. It includes an independent face air blowing function. In addition, an air purifier has been included.

Items		Specifications
Heater unit	Type	Two-way-flow full-air-mix system
Heater control assembly		Dial type
Compressor	Model	Scroll type <MSC90C>
Dual pressure switch kPa (psi)	High-pressure switch	ON → OFF: 2,942 (426.7), OFF → ON: 2,354 (341.4)
	Low-pressure switch	ON → OFF: 196 (28.4), OFF → ON: 221 (32.1)
Refrigerant and quantity g (oz)		R-134a (HFC-134a), Approximately 415 – 435 (14.6 – 15.3)

SAFETY PRECAUTIONS

⚠ WARNING

Wear safety goggles and gloves when servicing the refrigeration system to prevent severe damage to eyes and hands.

Because R-134a refrigerant is a hydro fluorocarbon (HFC) which contains hydrogen atoms in place of chlorine atoms, it will not cause damage to the ozone layer.

Ozone filters out harmful radiation from the sun. To assist in protecting the ozone layer, Mitsubishi Motors Corporation recommends an R-134a refrigerant recycling device.

Refrigerant R-134a is transparent and colorless in both the liquid and vapor state. Since it has a boiling point of –29.8°C (–21.64°F) at atmospheric pressure, it will be a vapor at all normal temperatures and pressures. The vapor is heavier than air, non-flammable, and non-explosive. The following precautions must be observed when handling R-134a.

⚠ WARNING

Do not heat R-134a above 40°C (104.0°F) or it may catch fire and explode.

R-134a evaporates so rapidly at normal atmospheric pressures and temperatures that it tends to freeze anything it contacts. For this reason, extreme care must be taken to prevent any liquid refrigerant from contacting the skin and especially the eyes. Always wear safety goggles when servicing the refrigeration part of the A/C system. Keep a bottle of sterile mineral oil handy when working on the refrigeration system.

1. Should any liquid refrigerant get into the eyes, use a few drops of mineral oil to wash them out. R-134a is rapidly absorbed by the oil.
2. Next splash the eyes with plenty of cold water.
3. Call your doctor immediately even though irritation has ceased after treatment.

⚠ CAUTION

Keep R-134a containers upright when charging the system.

In most instances, moderate heat is required to bring the pressure of the refrigerant in its container above the pressure of the system when charging or adding refrigerant.

A bucket or large pan of hot water not over 40°C (104.0°F) is all the heat required for this purpose. Do not heat the refrigerant container with a blow torch or any other means that would raise temperature and pressure above this temperature. Do not weld or steam clean on or near the system components or refrigerant lines.

⚠ WARNING

The leak detector for R-134a should be used to check for refrigerant gas leaks.

⚠ CAUTION

Do not allow liquid refrigerant to touch bright metal or it will be stained.

When metering R-134a into the refrigeration system keep the supply tank or cans in an upright position. If the refrigerant container is on its side or upside down, liquid refrigerant will enter the system and damage the compressor.

Refrigerant will tarnish bright metal and chrome surfaces, and in combination with moisture can severely corrode all metal surfaces.

OPERATION

Condenser fan and radiator fan control

- For the operation of each fan, refer to GROUP 14, Diagnosis - Symptom Chart P.14-3.

Compressor control

When operating the air conditioning switch

- The air thermo sensor, which senses the temperature of the air flowing out of the evaporator, deactivates the compressor at 5 °C (41.0 °F) or below.
- The dual pressure switch turns OFF when the refrigerant pressure becomes excessively high or low, thus protecting the compressor circuit. (See Table below.)
- When the air thermo sensor is activated, the dual pressure switch is ON, and the ignition switch, blower switch, and air conditioning switch are ON, the A/C compressor relay is energized.

When operating the air outlet changeover control knob

- When the air outlet changeover control knob is moved to DEFROSTER or DEFROSTER/FOOT position, the defroster switch, which is connected in series to the air conditioning switch, is turned on. The other compressor control than the above is the same as that when operating the air conditioning switch.

When compressor locks <vehicles with 3.0 L engine>

- Since the compressor and alternator are driven by the same belt, the electric generating function of the alternator also stops when the belt is broken. In order to assure the electric generating function of the alternator, there is an A/C-ECU to prevent breaking of the belt due to slipping when the compressor locks. The A/C-ECU makes a comparative calculation of the compressor revolutions and the engine revolutions which are detected by the revolution pick-up sensor. When 70% or more slip ratio continues for 3 seconds or more, the A/C compressor relay goes from on to off; at the same time, the operation display in the air conditioner switch blinks to announce an abnormality.

A/C Compressor Relay ON Conditions

Ignition switch (IG2)		ON	*NOTE: . A/C compressor relay is de-energized when any one switch, sensor or control unit shown on the left turns off.* *NOTE: . The * marked device measures the temperature of the outlet air, and according to the control characteristics of the magnetic clutch for the compressor, the automatic compressor controller outputs the "HI" signal (12V). When air of 5°C (41.0°F) or less blows out of the evaporator, the compressor magnetic clutch will be turned off.*
Blower switch		ON	
Air conditioning switch or defroster switch		ON	
Air thermo sensor		*	
Dual pressure switch	Low-pressure side 221 kPa (32.1 psi) or higher	ON	
	High-pressure side 2,942 kPa (426.7 psi) or below	ON	
A/C compressor relay driving transistor (within automatic compressor controller and engine control module <M/T>, powertrain control module <A/T>)		ON	

MANUAL A/C DIAGNOSIS

INTRODUCTION TO MANUAL A/C DIAGNOSIS

M1552012200087

With this system, after the outside air or inside air is taken in through the damper, it is fed to the evaporator by the blower fan and motor and cooled. The air cooled by the air mix damper is mixed appropriately with the warmed air to achieve a comfortable temperature. If the A/C does not operate or the cooled air is not discharged, the machine components or relay may be faulty.

MANUAL A/C DIAGNOSTIC TROUBLESHOOTING STRATEGY

M1552009600085

Use these steps to plan your diagnostic strategy. If you follow them carefully, you will be sure that you have exhausted most of the possible ways to find a heater, air conditioning and ventilation fault.

1. Gather information from the customer.
2. Verify that the condition described by the customer exists.
3. Find the malfunction by following the Symptom Chart.
4. Verify malfunction is eliminated.

SYMPTOM CHART

M1552009900075

SYMPTOMS	INSPECTION PROCEDURE	REFERENCE PAGE
When the ignition switch is "ON," the A/C does not operate.	1.	P.55-5
When the air outlet changeover control knob is moved to DEFROSTER or DEFROSTER/FOOT position, the A/C or the inside/outside air changeover damper motor does not operate.	2.	P.55-9
When the A/C is operating, temperature inside the passenger compartment does not decrease (cool air is not emitted).	3.	P.55-9
Blower fan and motor does not turn.	4.	P.55-11
Blower fan and motor does not stop turning.	5.	P.55-13
When the A/C is operating condenser fan or radiator fan does not turn.*	6.	P.55-15
The A/C indicator flashes <vehicles with 3.0L engine>.	7.	P.55-16

NOTE: For symptoms marked with an asterisk the condenser fan might not operate when there is an air conditioning low load from the air conditioning condenser control, so remove the battery terminal (-) and then check the symptoms after 5 minutes since initial start control after reconnection.

SYMPTOM PROCEDURES

INSPECTION PROCEDURE 1: When the ignition switch is "ON," the A/C does not operate.

DIAGNOSIS

STEP 1. Check for refrigerant leaks.

Q: Is the refrigerant leaking?

YES : Repair the leak. Then go to Step 11.
NO : Go to Step 2.

STEP 2. Check for excessive refrigerant.

Q: Is the refrigerant in good condition?

YES : Go to Step 3.
NO : Use the refrigerant recovery station to remove all of the refrigerant, and then calculate the amount of the refrigerant and charge it. Then go to Step 11.

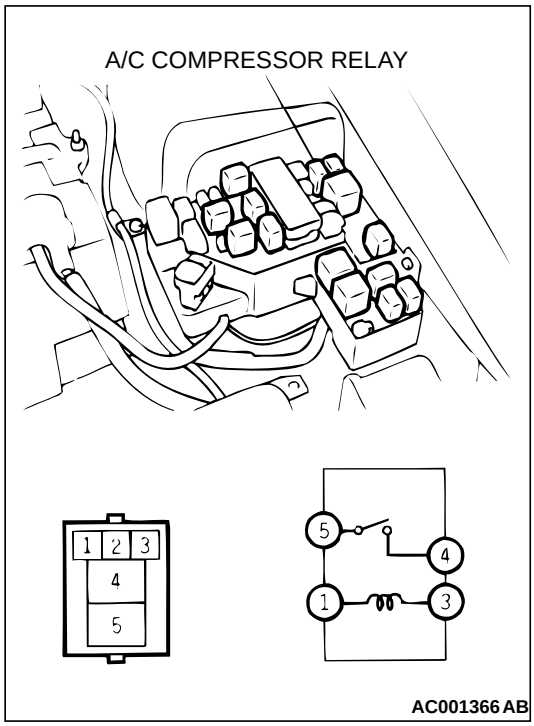

STEP 3. Check the A/C compressor relay continuity.

BATTERY VOLTAGE	TERMINAL NO. TO BE CONNECTED TO BATTERY	TERMINAL NO. TO BE CONDUCTED
SUPPLIED	1-3	4-5
NOT SUPPLIED	-	1-3

Q: Is the A/C compressor relay in good condition?

YES : Go to Step 4.

NO : Replace. Then go to Step 11.

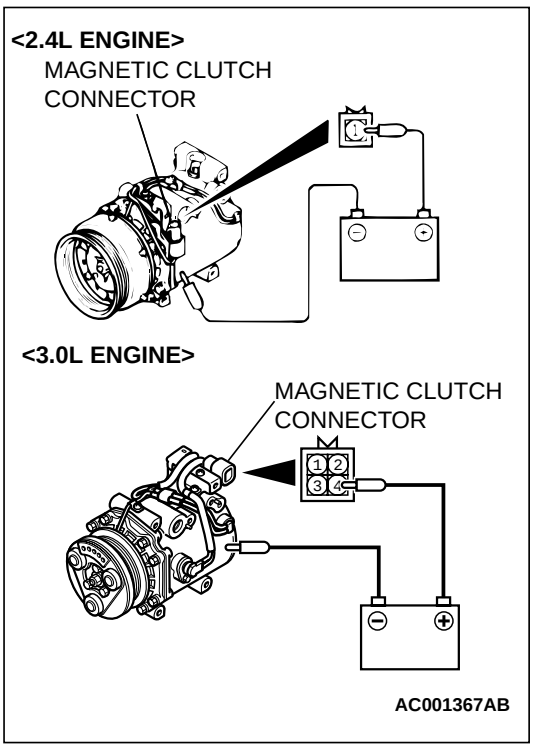

STEP 4. Check the magnetic clutch operation.

Connect the battery (+) terminal to the compressor magnetic clutch connector terminal 1; <2.4L engine>/terminal 4; <3.0L engine>, and ground the battery (-) terminal to the body of the compressor.

Q: Can the sound of the magnetic clutch (click) be heard?

YES : Go to Step 5.

NO : Replace. Then go to Step 11.

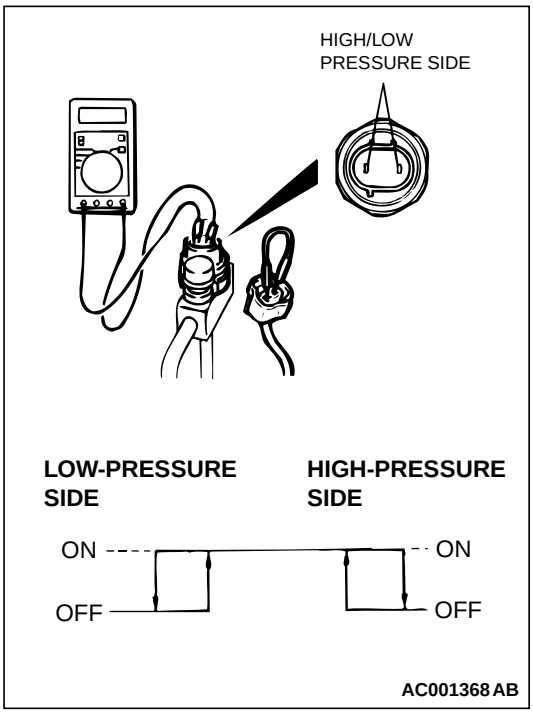

STEP 5. Check the dual pressure switch operation.

(1) Remove the dual pressure switch connector and connect the high/low pressure side terminals located on the harness side as shown in the illustration.

(2) Install a gauge manifold to the high-pressure side service valve of the refrigerant line. (Refer to P.55-22.)

(3) When the high/low pressure sides of the dual pressure switch are at operation pressure (ON) and the resistance is less than 2 ohm between the respective terminals, then the condition is normal. If open loop, replace the switch.

ITEMS	SWITCH POSITION	
	OFF → ON	ON → OFF
Low-pressure side kPa (psi)	221 (32.1)	196 (28.4)
High-pressure side kPa (psi)	2,354 (341.4)	2,942 (426.7)

Q: Is the dual pressure switch operating properly?

YES : Go to Step 6.

NO : Replace the switch. Then go to Step 11.

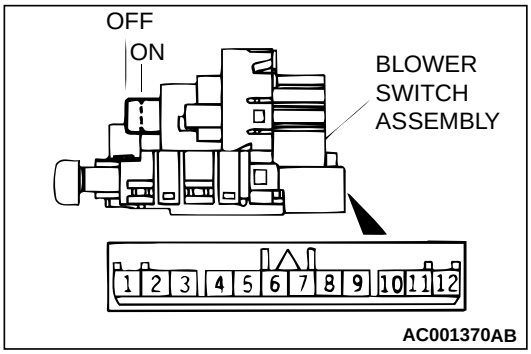

STEP 6. Check the A/C switch continuity.

SWITCH POSITION	TESTER CONNECTION (CONNECTOR B)	SPECIFIED CONDITION
Off	-	Open circuit
On	5-6	Less than two ohm

Q: Is the A/C switch continuity in good condition?

YES : Go to Step 7.

NO : Replace. Then go to Step 11.

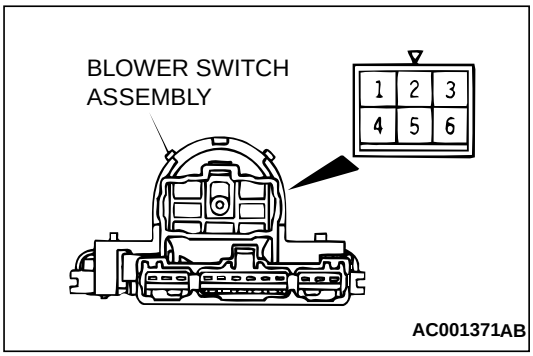

STEP 7. Check the blower switch continuity.

SWITCH POSITION	TESTER CONNECTION (CONNECTOR A)	SPECIFIED CONDITION
0 (OFF)	-	Open circuit
1 (LO)	3-5	Less than two ohm
2 (ML)	1-3	Less than two ohm
3 (MH)	3-6	Less than two ohm
4 (HI)	3-4	Less than two ohm

Q: Is the blower switch continuity in good condition?

YES : Go to Step 8.

NO : Replace. Then go to Step 11.

TSB Revision

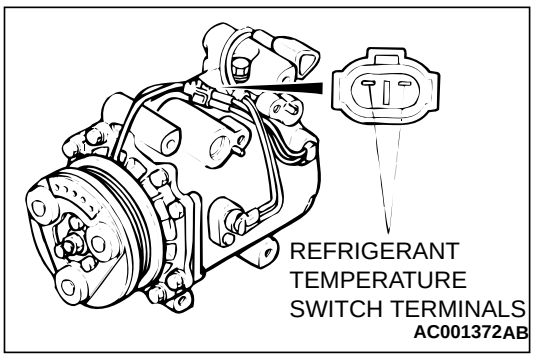

STEP 8. Check the refrigerant-temperature switch operation.

When the A/C is off, check that there is less than 2 ohm between the refrigerant-temperature switch terminals.

Q: Is the refrigerant-temperature switch in good condition?

YES : Go to Step 9.

NO : If the switch has an open circuit, replace the switch. Then go to Step 11.

STEP 9. Measure the automatic compressor controller terminal voltage.

Refer to P.55-18.

Q: Is the automatic compressor controller terminal voltage good?

YES : Go to Step 10.

NO : Replace. Then go to Step 11.

STEP 10. Measure the engine control module <M/T>/the powertrain control module <A/T> terminal voltage.

Refer to GROUP 13A, Diagnosis – Check at the Engine Control Module (ECM) <M/T> or Powertrain Control Module (PCM) <A/T> <2.4L engine> P.13A-452.

Refer to GROUP 13B, Diagnosis – Check at the Engine Control Module (ECM) <M/T> or Powertrain Control Module (PCM) <A/T> <3.0L engine> P.13B-531.

Q: Is the terminal voltage in good condition?

YES : Go to Step 11.

NO : Replace. Then go to Step 11.

STEP 11. Check symptoms.

Q: Is the A/C operating properly?

YES : This diagnosis is complete. (If no malfunctions are not found in all steps, an intermittent malfunction is suspected. Refer to GROUP 00E, How to Use Troubleshooting/Inspection Service Points – How to Cope with Intermittent Malfunction P.00-6.)

NO : Go to Step 1.

INSPECTION PROCEDURE 2: When the air outlet changeover control knob is moved to defroster or defroster/foot position, the A/C or the inside/outside air changeover damper motor does not operate.

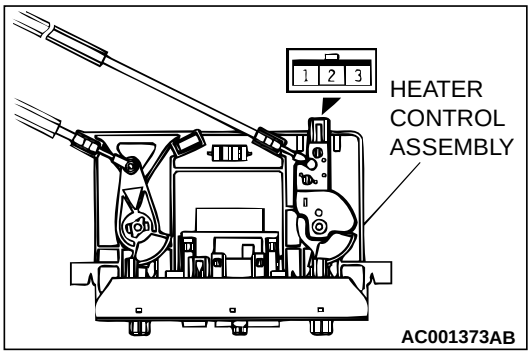

DIAGNOSIS

STEP 1. Check the defroster switch continuity.

AIR OUTLET CHANGEOVER CONTROL KNOB POSITION	TESTER CONNECTION	SPECIFIED CONDITION
DEFROSTER, DEFROSTER/ FOOT	2-3	Less than two ohm
OTHER POSITION	1-3	Less than two ohm

Q: Is the defroster switch in good condition?

YES : Go to Step 2.
NO : Replace. Then go to Step 2.

STEP 2. Check each A/C part.
Refer to Inspection Procedure 1.

Q: Is the A/C operating properly?

YES : This diagnosis is complete. (If no malfunctions are not found in all steps, an intermittent malfunction is suspected. Refer to GROUP 00E, How to Use Troubleshooting/Inspection Service Points – How to Cope with Intermittent Malfunction P.00-6.)
NO : Go to Step 1.

INSPECTION PROCEDURE 3: When the A/C is operating, temperature inside the passenger compartment does not decrease (cool air not emitted).

DIAGNOSIS

STEP 1. Check for refrigerant leaks.

Q: Is the refrigerant leaking?

YES : Repair. Then go to Step 6.
NO : Go to Step 2.

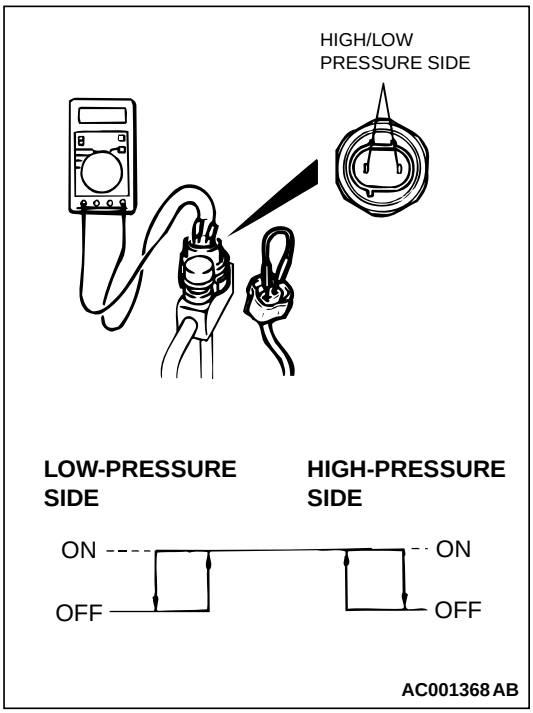

STEP 2. Check the dual pressure switch operation.

(1) Remove the dual pressure switch connector and connect the high/low pressure side terminals located on the harness side as shown in the illustration.

(2) Install a gauge manifold to the high-pressure side service valve of the refrigerant line. (Refer to P.55-22.)

(3) When the high/low pressure sides of the dual pressure switch are at operation pressure (ON) and there is continuity between the respective terminals.

ITEMS	SWITCH POSITION	
	OFF → ON	ON → OFF
Low-pressure side kPa (psi)	221 (32.1)	196 (28.4)
High-pressure side kPa (psi	2,354 (341.4)	2,942 (426.7)

Q: When the high/low pressure sides of the dual pressure switch are at operation pressure (ON), is there continuity between the respective terminals?

YES : Go to Step 3.

NO : Replace the switch. Then go to Step 6.

STEP 3. Check the refrigerant-temperature switch operation.

Q: When the A/C is off, check that there is continuity between the refrigerant-temperature switch terminals. Is the circuit open loop?

YES : Replace the switch. Then go to Step 6.

NO : If less than 2 ohm, go to Step 4.

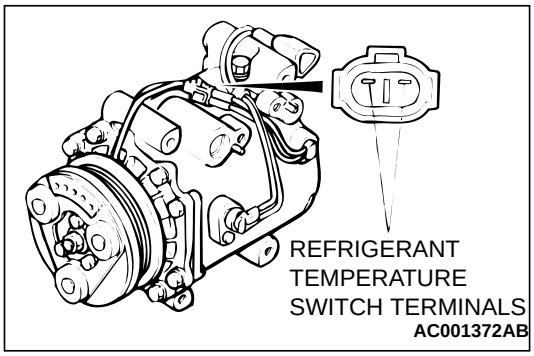

STEP 4. Measure the automatic compressor controller terminal voltage.

Refer to P.55-18.

Q: Is the automatic compressor controller terminal voltage in good condition?

YES : Go to Step 5.

NO : Replace. Then go to Step 6.

STEP 5. Measure the engine control module <M/T>/the powertrain control module <A/T> terminal voltage.

(1) Refer to GROUP 13A, Diagnosis – Check at The Engine Control Module (ECM) <M/T> or Powertrain Control Module (PCM) <A/T> <2.4L engine> P.13A-452.

(2) Refer to GROUP 13B, Diagnosis – Check at The Engine Control Module (ECM) <M/T> or Powertrain Control Module (PCM) <A/T> <3.0L engine> P.13B-531.

Q: Is the voltage in good condition?

YES : Go to Step 6.
NO : Replace. Then go to Step 6.

STEP 6. Check symptoms.

Q: Is the cool air discharged?

YES : This diagnosis is complete. (If no malfunctions are not found in all steps, an intermittent malfunction is suspected. Refer to GROUP 00E, How to Use Troubleshooting/Inspection Service Points – How to Cope with Intermittent Malfunction P.00-6.)
NO : Go to Step 1.

INSPECTION PROCEDURE 4: Blower fan and motor does not turn.

DIAGNOSIS

STEP 1. Check the blower relay continuity.

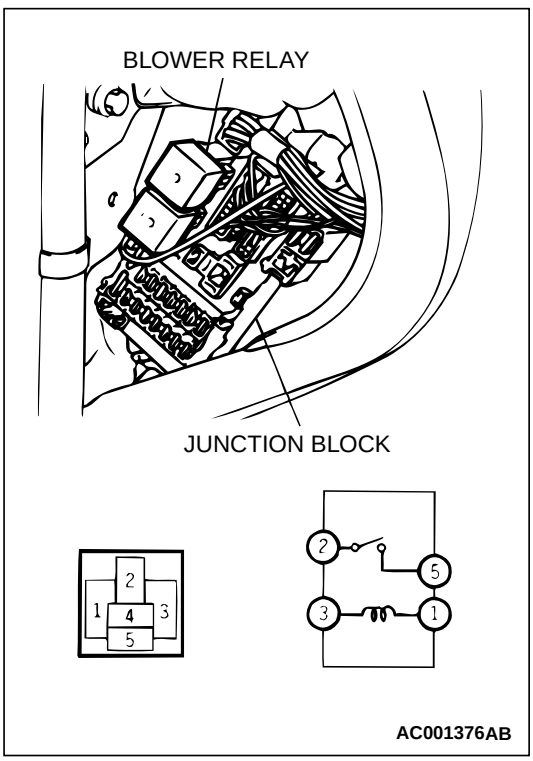

BATTERY VOLTAGE	TERMINAL NO. TO BE CONNECTED TO BATTERY	TERMINAL NO. TO BE CONDUCTED
SUPPLIED	1-3	2-5
NOT SUPPLIED	-	1-3

Q: Is the blower relay continuity in good condition?

YES : Go to Step 2.
NO : Replace. Then go to Step 5.

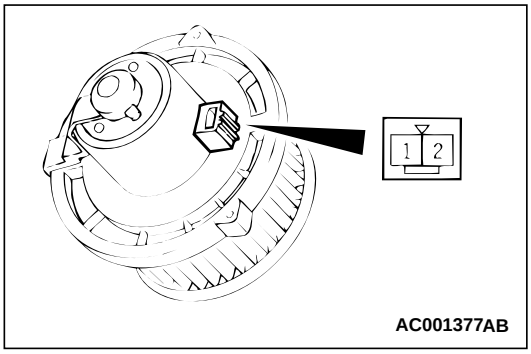

STEP 2. Check the blower fan and motor operation.
When battery voltage is applied between the terminals, check that the motor operates.

Q: Is there any abnormal noise?
YES : Go to Step 3.
NO : Replace. Then go to Step 5.

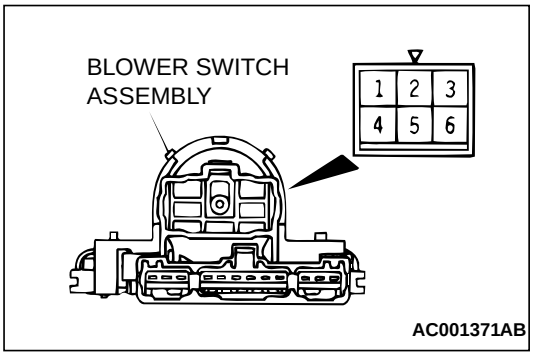

STEP 3. Check the blower switch continuity.

SWITCH POSITION	TESTER CONNECTION (CONNECTOR A)	SPECIFIED CONDITION
0 (OFF)	-	Open circuit
1 (LO)	3-5	Less than two ohm
2 (ML)	1-3	Less than two ohm
3 (MH)	3-6	Less than two ohm
4 (HI)	3-4	Less than two ohm

Q: Is the blower switch continuity in good condition?
YES : Go to Step 4.
NO : Replace. Then go to Step 5.

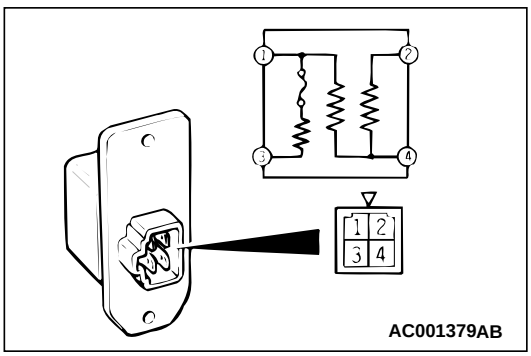

STEP 4. Check the resistor resistance value.
Use an ohmmeter to measure the resistance between the terminals as indicated below. Check that the measured value is at the standard value.

Standard value:

MEASUREMENT TERMINAL	STANDARD VALUE Ω
Between terminals 3 and 2 (LO)	2.3
Between terminals 3 and 4 (ML)	1.1
Between terminals 3 and 1 (MH)	0.4

Q: Is the measured value at the standard value?
YES : Go to Step 5.
NO : Replace. Then go to Step 5.

STEP 5. Check symptoms.

Q: Is the blower fan and motor turned?

YES : This diagnosis is complete. (If no malfunctions are not found in all steps, an intermittent malfunction is suspected. Refer to GROUP 00E, How to Use Troubleshooting/Inspection Service Points – How to Cope with Intermittent Malfunction P.00-6.)

NO : Go to Step 1.

INSPECTION PROCEDURE 5: Blower fan and motor does not stop turning.

DIAGNOSIS

STEP 1. Check the harness wire between the blower fan and motor connector C-20, the resistor connector C-19, and the blower switch connector C-127.

Q: Is the harness wire between the blower fan and motor connector C-20, the resistor connector C-19, and the blower switch connector C-127 in good condition?

YES : Go to Step 2.

NO : Repair it. Then go to Step 4.

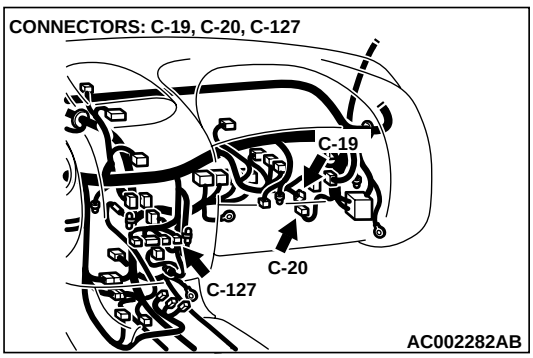

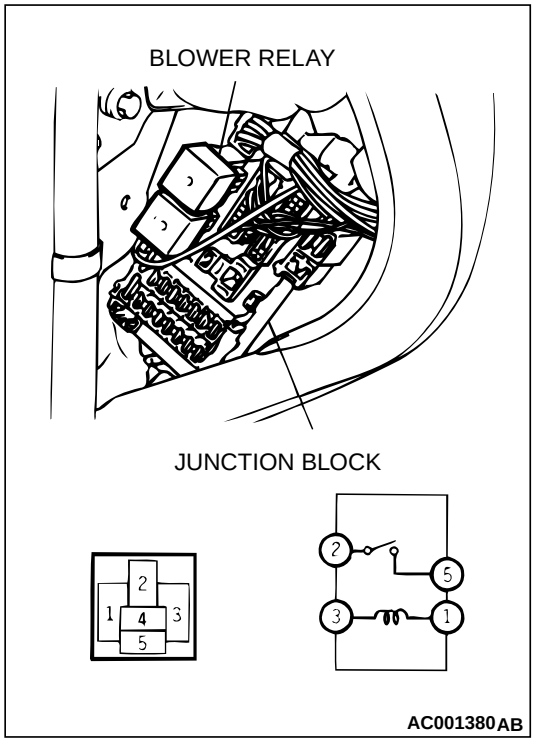

STEP 2. Check the blower relay continuity.

BATTERY VOLTAGE	TERMINAL NO. TO BE CONNECTED TO BATTERY	TERMINAL NO. TO BE CONDUCTED
SUPPLIED	1-3	2-5
NOT SUPPLIED	-	1-3

Q: Is the blower relay continuity in good condition?

YES : Go to Step 3.
NO : Replace. Then go to Step 4.

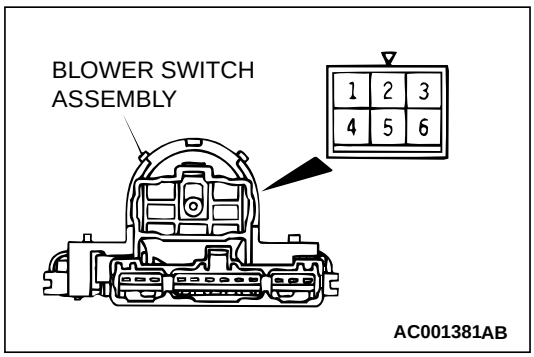

STEP 3. Check the blower switch continuity.

SWITCH POSITION	TESTER CONNECTION (CONNECTOR A)	SPECIFIED CONDITION
0 (OFF)	-	Open circuit
1 (LO)	3-5	Less than two ohm
2 (ML)	1-3	Less than two ohm
3 (MH)	3-6	Less than two ohm
4 (HI)	3-4	Less than two ohm

Q: Is the blower switch continuity in good condition?

YES : Go to Step 4.
NO : Replace. Then go to Step 4.

STEP 4. Check symptoms.

Q: Does the blower motor stop turning?

YES : This diagnosis is complete. (If no malfunctions are not found in all steps, an intermittent malfunction is suspected. Refer to GROUP 00E, How to Use Troubleshooting/Inspection Service Points – How to Cope with Intermittent Malfunction P.00-6.)
NO : Go to Step 1.

TSB Revision

INSPACTION PROCEDURE 6: When the A/C is operating condenser fan or radiator fan does not turn.

DIAGNOSIS

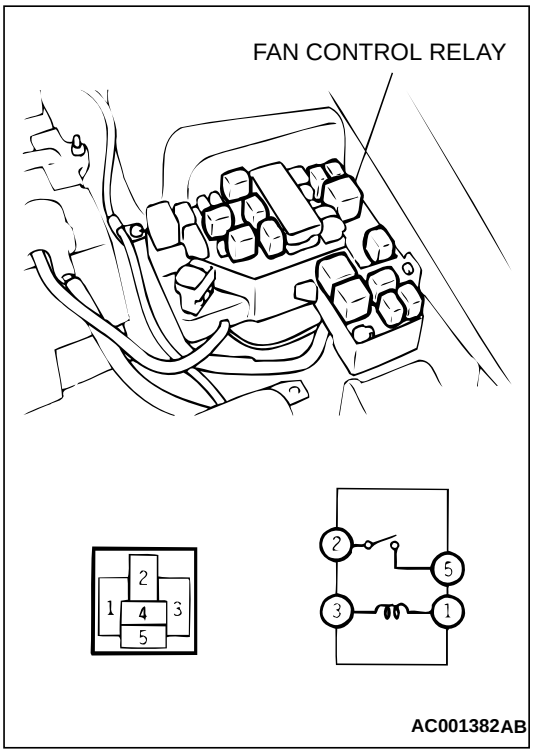

STEP 1. Check the fan control relay continuity.

BATTERY VOLTAGE	TERMINAL NO. TO BE CONNECTED TO BATTERY	TERMINAL NO. TO BE CONDUCTED
SUPPLIED	1-3	2-5
NOT SUPPLIED	-	1-3

Q: Is the fan control relay continuity in good condition?

YES : Go to Step 2.
NO : Replace. Then go to Step 4.

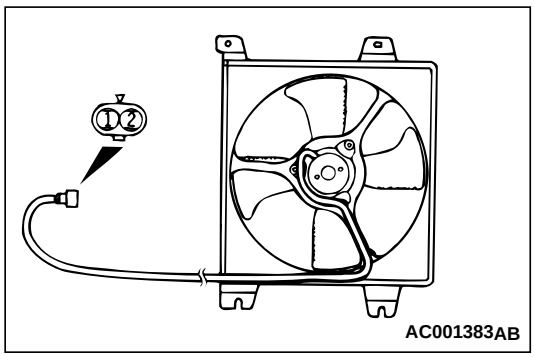

STEP 2. Check the condenser fan motor operation <vehicles with 3.0L engine>.

Check to be sure that the condenser fan motor operates when battery voltage is applied to terminal 2 and terminal 1 grounded.

Q: Is the condenser fan motor operating correctly?

YES : Go to Step 3.
NO : Replace. Then go to Step 3.

STEP 3. Measure the fan controller terminal voltage.

Refer to GROUP 14, On-vehicle Service – Fan Control Module Check P.14-18.

Q: Is the fan controller terminal voltage in good condition?

YES : Go to Step 4.
NO : Replace. Then go to Step 4.

STEP 4. Check symptoms.

NOTE: Condenser fan might not operate when there is an air conditioning low load from the air conditioning condenser control, so remove the negative battery terminal and then check the symptoms after 5 minutes since initial start control after reconnecting.

Q: Is the condenser fan or radiator fan operating correctly?

YES : This diagnosis is complete. (If no malfunctions are not found in all steps, an intermittent malfunction is suspected. Refer to GROUP 00E, How to Use Troubleshooting/Inspection Service Points – How to Cope with Intermittent Malfunction P.00-6.)

NO : Go to Step 1.

INSPACTION PROCEDURE 7: The A/C indicator flashes <vehicles with 3.0L ENGINE> .

THE A/C INDICATOR FLASHES.

STEP 1. Check the drive belt tension.

Refer to GROUP 00, Lubrication and Maintenance Service – Drive belts.

Q: Is the drive belt tension in good condition?

YES : Go to Step 2.

NO : Repair. Then go to Step 4.

STEP 2. Check the revolution pick-up sensor.

Measure the resistance between terminals 1 and 3. Check that the measured value is at the standard value.

Standard value: 405 ± 35 Ω when the ambient temperature is 20 °C (68 °F)

Q: Is the measured value at the standard value?

YES : Go to Step 3.

NO : Replace. Then go to Step 3.

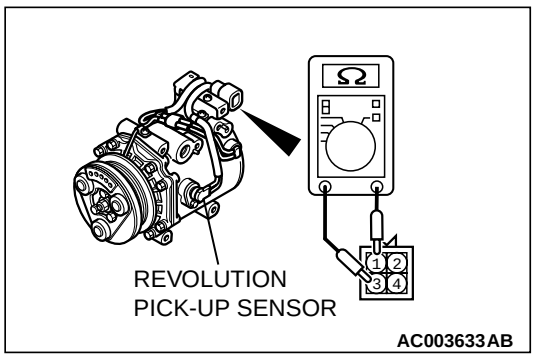

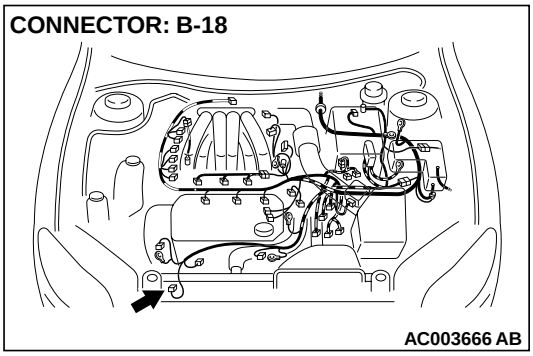

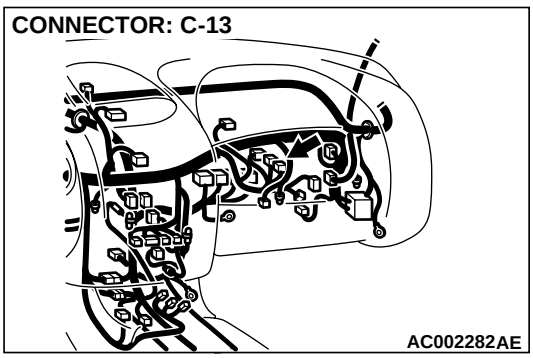

STEP 3. Check the harness wire between the compressor connector B-18 and automatic compressor controller connector C-13.

Q: Is the harness wire between the compressor connector B-18 and automatic compressor controller connector C-13 in good condition?

YES : Go to Step 4.

NO : Repair. Then go to Step 4.

STEP 4. Measure the automatic compressor controller terminal voltage.

Refer to P.55-18.

Q: Is the automatic compressor controller terminal voltage in good condition?

YES : Go to Step 5.

NO : Replace. Then go to Step 5.

STEP 5. Check symptoms.

Q: Does the A/C indicator flashes?

YES : Go to Step 1.

NO : This diagnosis is complete. (If no malfunctions are not found in all steps, an intermittent malfunction is suspected. Refer to GROUP 00E, How to Use Troubleshooting/Inspection Service Points – How to Cope with Intermittent Malfunction P.00-6.)

CHECK AT ECU TERMINAL

M1552010300077

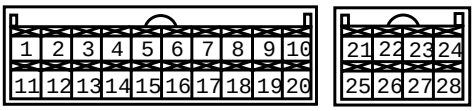

AC002292AB

TERMINAL NO.	CHECK ITEM	CHECKING REQUIREMENTS	NORMAL CONDITION
1	Power supply	Ignition switch: "LOCK" (OFF)	0 V
		Ignition switch: "ON"	Battery positive voltage
2	Input from thermistor sensor to controller	Ignition switch and A/C switch: OFF	0 V
		Ignition switch and A/C switch: ON	2 – 5 V
3	Thermistor sensor power supply	Ignition switch and A/C switch: OFF	0 V
		Ignition switch and A/C switch: ON	5 V
4, 5	Output from controller to engine control module <M/T>/ powertrain control module <A/T>	Air thermistor sensor detection temperature: 5°C (41.0°F) or less	0 V
		Air thermistor sensor detection temperature: 55C (46.45F) or less	Battery positive voltage
6	-	-	-
7	Input from A/C switch (outside/ inside air selection damper control switch) to controller	• Outside air switch: ON • Inside air switch: OFF	0 V
		• Outside air switch: OFF • Inside air switch: ON	Battery positive voltage
8	Input from defroster switch (FOOT) to controller	Defroster switch (FOOT): ON	0 V
		Defroster switch (FOOT): OFF	Battery positive voltage
9	Input from defroster switch (DEF) to controller	Defroster switch (DEF): ON	0 V
		Defroster switch (DEF): OFF	Battery positive voltage
10	Input from A/C switch to controller	A/C switch: OFF	0 V
		A/C switch: ON	Battery positive voltage
11	Ground	Always	0 V
12	-	-	-
13	Input from A/C switch (outside/ inside air selection damper control switch) to controller	• Outside air switch: ON • Inside air switch: OFF	Battery positive voltage
		• Outside air switch: OFF • Inside air switch: ON	0 V
14	Input from A/C switch (IND) to controller	A/C switch: OFF	0 V
		A/C switch: ON	Battery positive voltage
15	-	-	-

TSB Revision

TERMINAL NO.	CHECK ITEM	CHECKING REQUIREMENTS	NORMAL CONDITION
16	Output from controller to outside/inside air selection damper control motor	• Outside air switch: ON • Inside air switch: OFF	Battery positive voltage
		• Outside air switch: OFF • Inside air switch: ON	0 V
17	Output from controller to outside/inside air selection damper control motor	• Outside air switch: ON • Inside air switch: OFF	0 V
		• Outside air switch: OFF • Inside air switch: ON	Battery positive voltage
18	Input from taillight relay to controller	Taillight relay: OFF	0 V
		Taillight relay: ON	Battery positive voltage
19	Input from blower switch (LO) to controller	Blower switch (LO): OFF	0 V
		Blower switch (LO): ON	Battery positive voltage
20	-	-	-
21	Input from A/C compressor relay to controller	A/C compressor relay: OFF	0 V
		A/C compressor relay: ON	Battery positive voltage
22	Input from distributor assembly to controller	Ignition switch: "LOCK" (OFF)	0 V
		Ignition switch: "ON" (engine stopped)	Battery positive voltage
		Ignition switch: "ON" (engine stopped)	0 V – Battery positive voltage
23	Revolution pick-up sensor power supply	Ignition switch and A/C switch: OFF	0 V
		Ignition switch and A/C switch: ON	5 V
24	Input from revolution pick-up sensor relay to controller	A/C compressor relay: OFF	0 V
		A/C compressor relay: ON	2 – 5 V

TROUBLESHOOTING HINT

M1552013400040

Condenser fan and radiator fan control

- Refer to GROUP 14, Diagnosis – Symptom ChartP.14-3.

Compressor control

- Refer to P.55-3.

SPECIAL TOOLS

M1552000600088

TOOL	TOOL NUMBER AND NAME	REPLACED BY MILLER TOOL NUMBER	APPLICATION
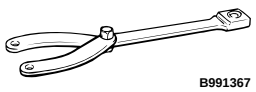 B991367	MB991367 Special spanner	MB991367-01	Armature mounting nut of compressor removal and installation
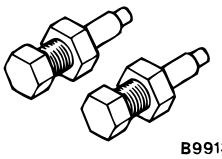 B991386	MB991386 Pin	MIT217213	Armature mounting nut of compressor removal and installation

ON-VEHICLE SERVICE

REFRIGERANT LEVEL TEST

M1552008400066

Use the refrigerant recovery station to remove all of the refrigerant, and then calculate the amount of the refrigerant and charge it.

MAGNETIC CLUTCH TEST

M1552008500085

1. Disconnect the magnetic clutch connector to the magnetic clutch.
2. Connect positive battery voltage directly to the connector for the magnetic clutch.
3. If the magnetic clutch is normal, there will be "click." If the pullet and armature do not make contact ("click"), there is a malfunction.

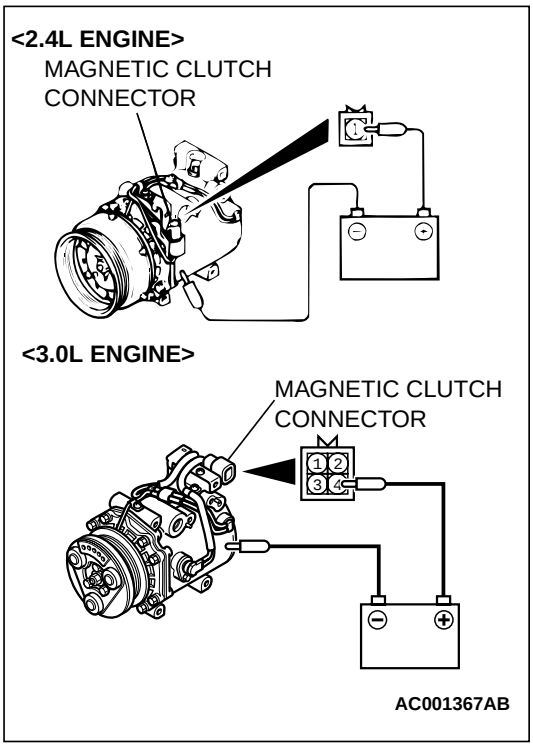

RECEIVER DRIER TEST

M1552008600060

Operate the unit and check the piping temperature by touching the receiver drier outlet and inlet.
If there is a difference in the temperatures, the receiver drier is restricted.
Replace the receiver drier.

PRESSURE SWITCH CHECK

M1552010400063

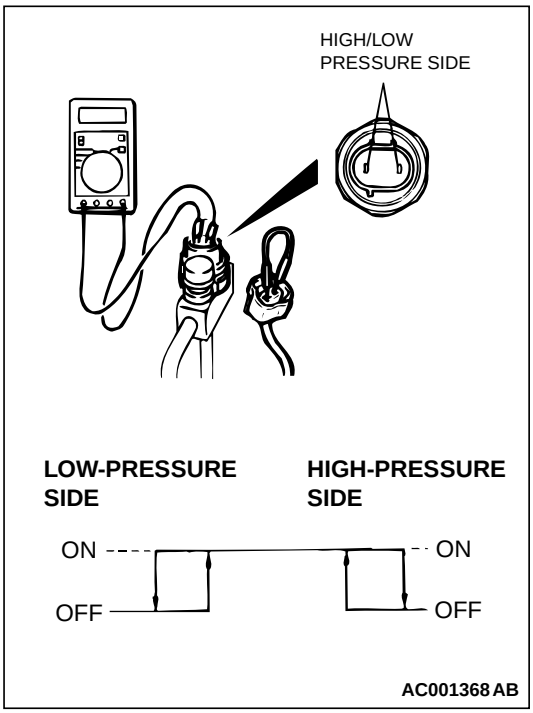

1. Remove the dual pressure switch connector and connect the high/low pressure side terminals located on the harness side as shown in the illustration.
2. Install a gauge manifold to the high-pressure side service valve of the refrigerant line. (Refer to P.55-22.)
3. When the high/low pressure sides of the dual pressure switch are at operation pressure (ON) and there is continuity between the respective terminals, then the condition is normal. If there is no continuity, replace the switch.

ITEMS	SWITCH POSITION	
	OFF → ON	ON → OFF
Low-pressure side kPa (psi)	221 (32.1)	196 (28.4)
High-pressure side kPa (psi)	2,354 (341.4)	2,942 (426.7)

COMPRESSOR DRIVE BELT ADJUSTMENT

M1552001000067

Refer to GROUP 00, Maintenance Service – Drive Belts P.00-40.

CHARGING

M1552001200072

Use the refrigerant recovery station to charge the refrigerant.

METHOD BY USING REFRIGERANT RECOVERY AND RECYCLING UNIT

Using the refrigerant recovery and recycling unit, refill the refrigerant.

NOTE: Refer to that Refrigerant Recovery and Recycling Unit Instruction Manual for operation of the unit.

DISCHARGING SYSTEM

Use the refrigerant recovery unit to discharge refrigerant gas from the system.

NOTE: Refer to that Refrigerant Recovery and Recycling Unit Instruction Manual for operation of the unit.

REFILLING OF OIL IN THE A/C SYSTEM

Too little oil will provide inadequate compressor lubrication and cause a compressor failure. Too much oil will increase discharge air temperature.
When a compressor is installed at the factory, it contains 120 cm^3 (4.1 floz) of refrigerant oil. While the A/C system is in operation, the oil is carried through the entire system by the refrigerant. Some of this oil will be trapped and retained in various parts of the system.
When the following system components are changed, it is necessary to add oil to the system to replace the oil being removed with the component.

Compressor oil: SUN PAG 56

Quantity:

- **Evaporator: 60 cm^3 (2.0 floz)**
- **Condenser: 15 cm^3 (0.5 floz)**
- **Suction hose: 10 cm^3 (0.3 floz)**

PERFORMANCE TEST

M1552001400065

1. The vehicles to be tested should be in a place that is not in direct sunlight.
2. Close the high and low-pressure valve of the gauge manifold.
3. Connect the charging hose (blue) to the low-pressure valve and connect the charging hose (red) to the high-pressure valve of the gauge manifold.
4. Install the quick joint (for low-pressure) to the charging hose (blue), and connect the quick joint (for high-pressure) to the charging hose (red).

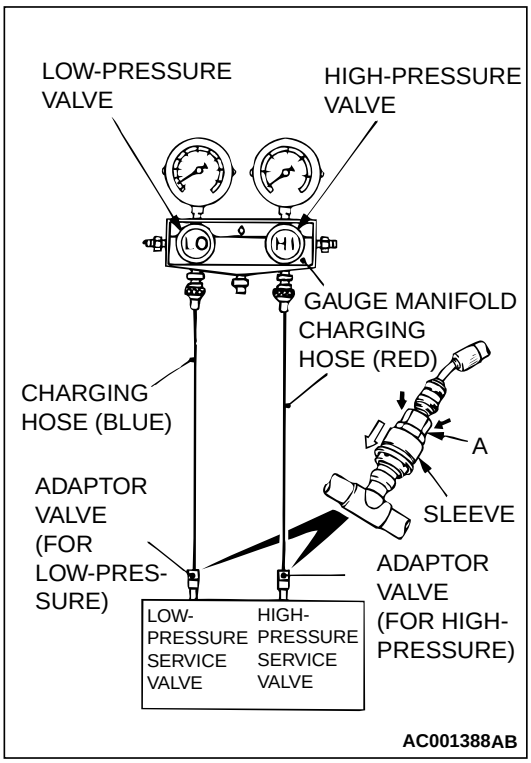

⚠ CAUTION

- **To connect the quick joint, press section A firmly against the service valve until a click is heard.**
- **When connecting, run your hand along the hose while pressing to ensure that there are no bends in the hose.**

NOTE: The high-pressure service valve is on A/C pipe and the low-pressure service valve is on the suction hose.

5. Connect the quick joint (for low-pressure) to the low-pressure service valve and connect the quick joint (for high-pressure) to the high-pressure service valve.
6. Start the engine.
7. Set the A/C controls as follows:
   - A/C switch: A/C – ON position
   - Mode selection: FACE position
   - Temperature control: MAXIMUM COOLING position
   - Air selection: RECIRCULATION position
   - Blower switch: "4" (Fast) position
8. Adjust engine speed to 1,500 r/min with A/C clutch engaged.
9. Engine should be warmed up with doors and windows closed.

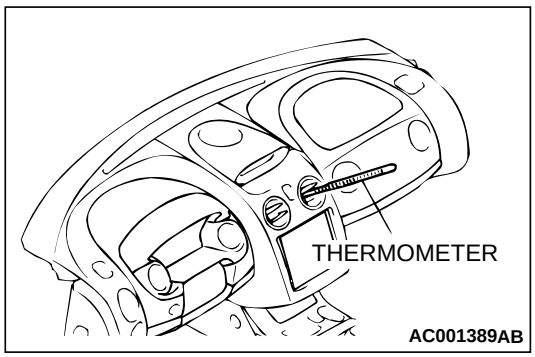

10. Insert a thermometer in the center air outlet and operate the engine for 20 minutes.

NOTE: If the clutch cycles, take the reading before the clutch disengages.

11. Note the discharge air temperature.

Performance Temperature Chart

GARAGE AMBIENT TEMPERATURE °C (°F)	20 (68)	25 (77)	35 (95)	40 (104)
Discharge air temperature °C (°F)	5.0 – 10.0 (42 – 50)	6.0 – 10.5 (43 – 51)	7.5 – 12.0 (46 – 54)	7.5 – 12.5 (46 – 55)
Compressor high pressure kPa (psi)	1,540 – 1,935 (224 – 281)	1,618 – 2,000 (235 – 290)	2,070 – 2,205 (301 – 320)	2,140 – 2,620 (311 – 380)
Compressor low pressure kPa (psi)	125 – 155 (18 – 23)	125 – 155 (18 – 23)	150 – 180 (22 – 26)	145 – 190 (21 – 28)

REFRIGERANT LEAK REPAIR PROCEDURE

M1552001500062

LOST CHARGE

If the system has lost all charge due to a leak:

1. Evacuate the system. (Refer to P.55-21.)
2. Charge the system with approximately 0.453 kg (1 pound) of refrigerant.
3. Check for leaks.
4. Discharge the system.
5. Repair leaks.

⚠ CAUTION

Replacement filter-drier units must be sealed while in storage. The drier used in these units will saturate water quickly upon exposure to the atmosphere. When installing a drier, have all tools and supplies ready for quick assembly to avoid keeping the system open any longer than necessary.

6. Replace receiver drier.
7. Evacuate and charge system.

LOW CHARGE

If the system has not lost all of its refrigerant charge; locate and repair all leaks. If it is necessary to increase the system pressure to find the leak (because of an especially low charge) add refrigerant. If it is possible to repair the leak without discharging the refrigerant system, use the procedure for correcting low refrigerant level.

HANDLING TUBING AND FITTINGS

Kinks in the refrigerant tubing or sharp bends in the refrigerant hose lines will greatly reduce the capacity of the entire system. High pressures are produced in the system when it is operating. Extreme care must be exercised to make sure that all connections are pressure tight. Dirt and moisture can enter the system when it is opened for repair or replacement of lines or components. The following precautions must be observed. The system must be completely discharged before opening any fitting of connection in the refrigeration system. Open fittings with caution even after the system has been discharged. If any pressure is noticed as a fitting is loosened, allow trapped pressure to bleed off very slowly.

Never attempt to rebend formed lines to fit. Use the correct line for the installation you are servicing. A good rule for the flexible hose lines is keep the radius of all bends at least 10 times the diameter of the hose.

Sharper bends will reduce the flow of refrigerant. The flexible hose lines should be routed so that they are at least 80 mm (3.1 inches) from the exhaust manifold. It is good practice to inspect all flexible hose lines at least once a year to make sure they are in good condition and properly routed.

On standard plumbing fittings with O-rings, these O-rings are not reusable.

COMPRESSOR NOISE CHECK

You must first know the conditions when the noise occurs. These conditions are: weather, vehicle speed, in gear or neutral, engine temperature or any other special conditions.
Noises that develop during A/C operation can often be misleading. For example: what sounds like a failed front bearing or connecting rod, may be caused by loose bolts, nuts, mounting brackets, or a loose clutch assembly. Verify accessory drive belt tension (power steering or generator).
Improper accessory drive belt tension can cause a misleading noise when the compressor is engaged and little or no noise when the compressor is disengaged.
Drive belts are speed-sensitive. That is, at different engine speeds, and depending upon belt tension, belts can develop unusual noises that are often mistaken for mechanical problems within the compressor.

M1552008700067

ADJUSTMENT

1. Select a quiet area for testing. Duplicate conditions as much as possible. Switch compressor on and off several times to clearly identify compressor noise. To duplicate high ambient conditions (high head pressure), restrict air flow through condenser. Install manifold gauge set to make sure discharge pressure doesn't exceed 2,070 kPa (300.2 psi).
2. Tighten all compressor mounting bolts, clutch mounting bolt, and compressor drive belt. Check to assure clutch coil is tight (no rotation or wobble).
3. Check refrigerant hoses for rubbing or interference that can cause unusual noises.
4. Check refrigerant charge. (Refer to P.55-21.)
5. Recheck compressor noise as in Step 1.
6. If noise still exists, loosen compressor mounting bolts and retighten. Repeat Step 1.
7. If noise continues, replace compressor and repeat Step 1.

POWER RELAY CHECK

M1552008800064

BLOWER RELAY

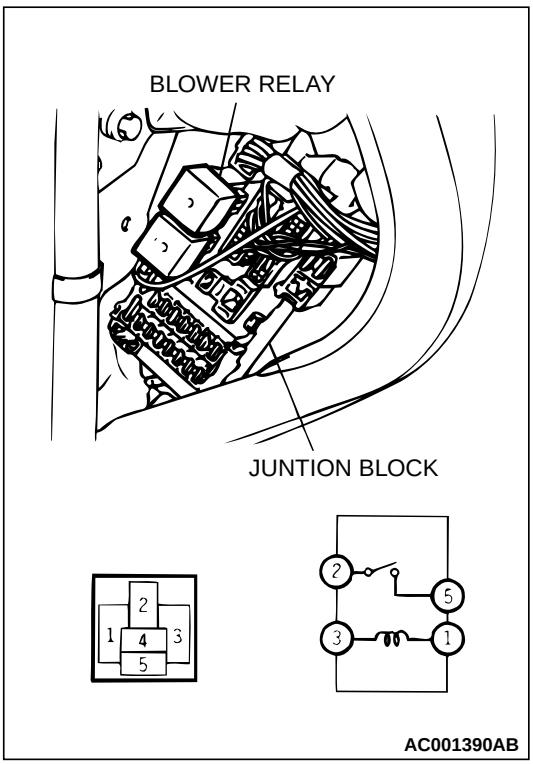

BATTERY VOLTAGE	TERMINAL NO. TO BE CONNECTED TO BATTERY	TERMINAL NO. TO BE CONDUCTED
SUPPLIED	1-3	2-5
NOT SUPPLIED	-	1-3

A/C COMPRESSOR RELAY

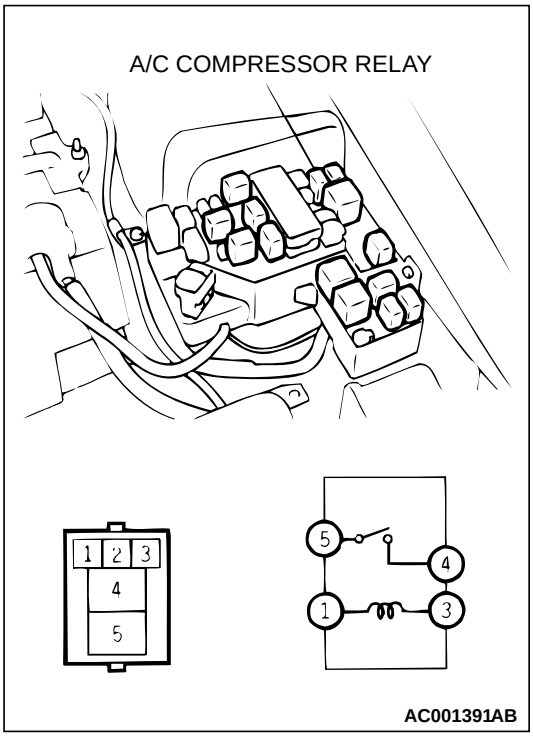

BATTERY VOLTAGE	TERMINAL NO. TO BE CONNECTED TO BATTERY	TERMINAL NO. TO BE CONDUCTED
SUPPLIED	1-3	4-5
NOT SUPPLIED	-	1-3

FAN CONTROL RELAY CONTINUITY CHECK

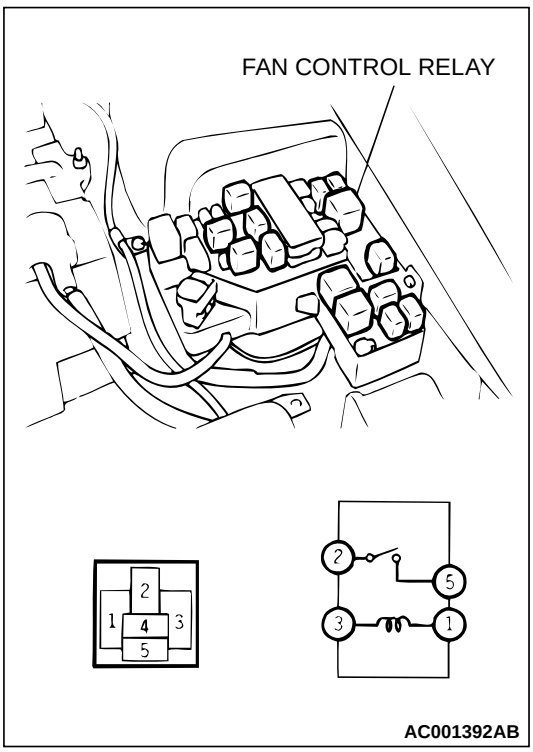

BATTERY VOLTAGE	TERMINAL NO. TO BE CONNECTED TO BATTERY	TERMINAL NO. TO BE CONDUCTED
SUPPLIED	1-3	2-5
NOT SUPPLIED	-	1-3

IDLE-UP OPERATION CHECK

M1552001600069

1. Before inspection and adjustment, set vehicle in the following condition:
   - Engine coolant temperature: 80 – 90 °C (176.0 - 194.0 °F)
   - Lights, electric cooling fan and accessories: Set to OFF
   - Transmission: Neutral (N or P for vehicles with A/T)
   - Steering wheel: Straightforward
2. Check whether or not the idle speed is the standard value.
   <2.4L Engine>: Refer to GROUP 13A, On-vehicle Service – Basic Idle Speed Adjustment P.13A-474.
   <3.0L Engine>: Refer to GROUP 13B, On-vehicle Service – Basic Idle Speed Adjustment P.13B-552.

   Standard value:
   - **<2.4L engine> 750 + 100 r/min**
   - **<3.0L engine> 700 + 100 r/min**

   NOTE: Check 4 minutes after idling begins.
3. When the A/C is running after turning the A/C switch to ON, and the blower switch to the 3(MH) or 4(HI) position, check to be sure that the idle speed is at the standard value.

   Standard value: 850 ± 100 r/min

   NOTE: The engine control module <M/T>/the powertrain control module <A/T> determines whether the A/C load is low or high according to the output signal from the automatic compressor controller.

   NOTE: It is not necessary to make an adjustment, because the idling speed is automatically adjusted by the ISC system. If, however, a deviation from the standard value occurs for some reason, check the ISC system.

   NOTE: Check 4 minutes after idling begins.

HEATER CONTROL ASSEMBLY AND A/C SWITCH

M1552002400057

REMOVAL AND INSTALLATION

Pre-removal and Post-installation Operation

- Center Panel Assembly, Front Driver's Side Under Cover and Front Passenger's Side Under Cover Removal and Installation (Refer to GROUP 52A, Instrument Panel P.52A-4.)
- Radio and Tape Player Removal and Installation (Refer to GROUP 54A, Audio System - Radio and Tape Player, CD Player and CD Auto Changer P.54A-180.)
- Floor Console Removal and Installation (Refer to GROUP 52A, Floor Console P.52A-9.)
- Instrument Panel Center Reinforcement Removal and Installation (Refer to GROUP 52A, Instrument Panel P.52A-4.)
- Foot Duct (LH) Removal and Installation (Refer to P.55-44.)

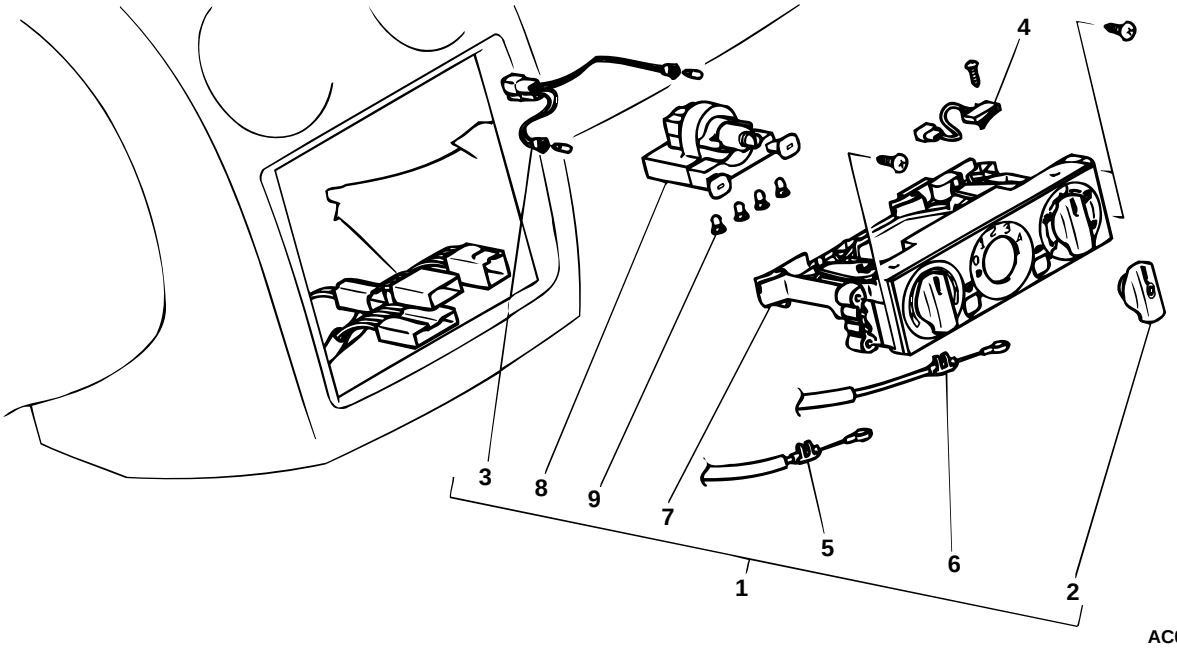

REMOVAL STEPS

<<A>> >>A<< 1. HEATER CONTROL ASSEMBLY >>B<<
2. KNOB ASSEMBLY
3. BULB HARNESS
4. DEFROSTER SWITCH
>>B<< 5. AIR MIX DAMPER LEVER CABLE

REMOVAL STEPS (Continued)

6. AIR OUTLET CHANGEOVER DAMPER LINK CABLE
7. HEATER CONTROL PANEL
8. BLOWER SWITCH ASSEMBLY
9. BULB

REMOVAL SERVICE POINTS

<<A>> HEATER CONTROL ASSEMBLY REMOVAL

After disconnecting the heater/cooler unit side connections of the air mix damper lever cable and air outlet changeover link cable, remove the heater control assembly.

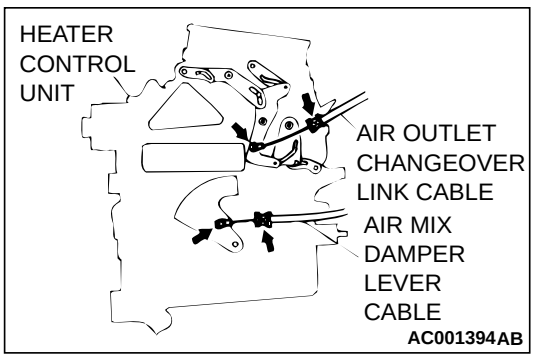

<<B>> AIR MIX DAMPER LEVER CABLE, AIR OUTLET CHANGEOVER DAMPER LINK CABLE REMOVAL

Insert a flat-tipped screwdriver into the control base clip from inner side, and then remove the cable by lifting the claw part of the clip.

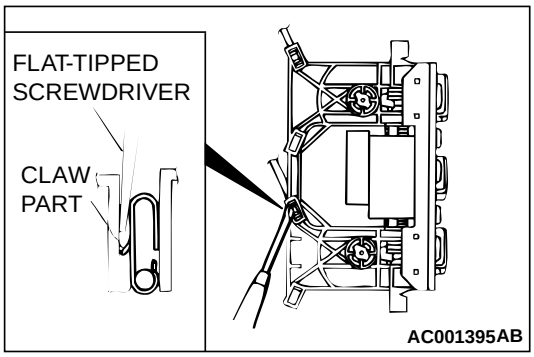

INSTALLATION SERVICE POINT

>>A<< HEATER CONTROL ASSEMBLY INSTALLATION

1. Follow the steps below to install the air outlet changeover damper link cable.
   (1) Set the air outlet changeover control knob on the heater control assembly to the defroster position.
   (2) Set the air outlet changeover damper link of the heater/cooler unit to the defroster position as shown in the illustration, and then connect the cable to the link pin.
   (3) Push the outer cable in the direction so that there is no looseness, and then secure it with the clip.

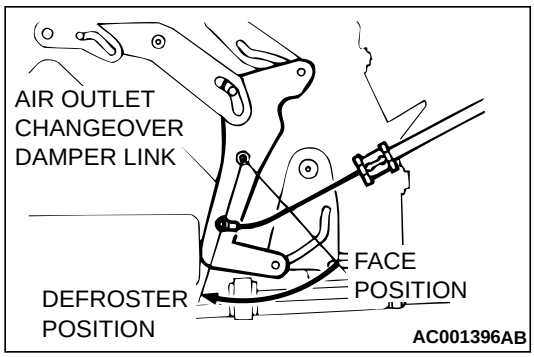

2. Follow the steps below to install the air mix damper lever cable.
   (1) Set the temperature control knob on the heater control assembly to the maximum hot position.
   (2) Set the air mix damper lever of the heater/cooler unit to the maximum hot position as shown in the illustration, and then connect the cable to the lever pin.
   (3) Push the outer cable in the direction so that there is no looseness, and then secure it with the clip.

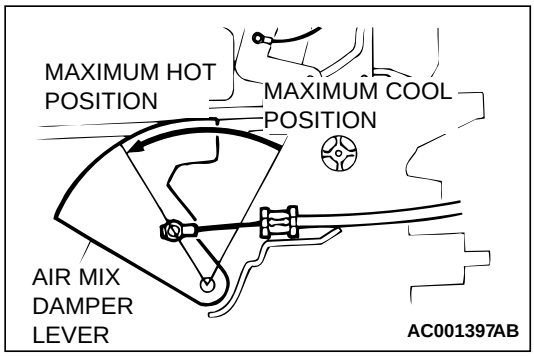

3. After installation, ensure that each damper operates smoothly by operating the heater control assembly knob.

INSPECTION

M1552002500032

DEFROSTER SWITCH CONTINUITY CHECK

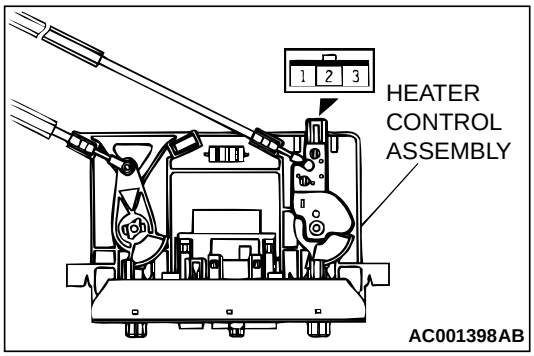

AIR OUTLET CHANGEOVER CONTROL KNOB POSITION	TESTER CONNECTION	SPECIFIED CONDITION
DEFROSTER, DEFROSTER/ FOOT	2-3	Less than two ohm
OTHER POSITION	1-3	Less than two ohm

BLOWER SWITCH ASSEMBLY CONTINUITY CHECK

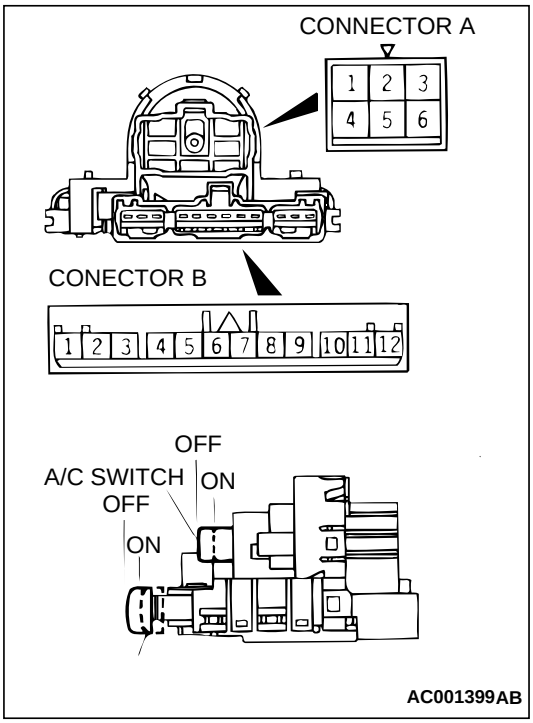

1. BLOWER SWITCH

SWITCH POSITION	TESTER CONNECTION (CONNECTOR A)	SPECIFIED CONDITION
0 (OFF)	-	Open circuit
1 (LO)	3-5	Less than two ohm
2 (ML)	1-3	Less than two ohm
3 (MH)	3-6	Less than two ohm
4 (HI)	3-4	Less than two ohm

2. A/C SWITCH

SWITCH POSITION	TESTER CONNECTION (CONNECTOR B)	SPECIFIED CONDITION
Off	-	Open circuit
On	5-6	Less than two ohm

3. INSIDE/OUTSIDE AIR CHANGEOVER SWITCH

SWITCH POSITION	TESTER CONNECTION (CONNECTOR B)	SPECIFIED CONDITION
Inside air	-	Open circuit
Outside air	4-5	Continuity

HEATER UNIT, HEATER CORE, BLOWER ASSEMBLY, EVAPORATOR UNIT

M1552011600037

REMOVAL AND INSTALLATION

⚠ WARNING

When removing and installing the heater unit, do not let it bump against the SRS-ECU or the components.

Pre-removal and Post-installation Operation

- Front Driver's Side Under Cover, Center Panel Assembly, Glove Box and Front Passenger's Side Under Cover Removal and Installation (Refer to GROUP 52A, Instrument Panel P.52A-4.)
- Joint Duct Removal and Installation (Refer to P.55-32.)

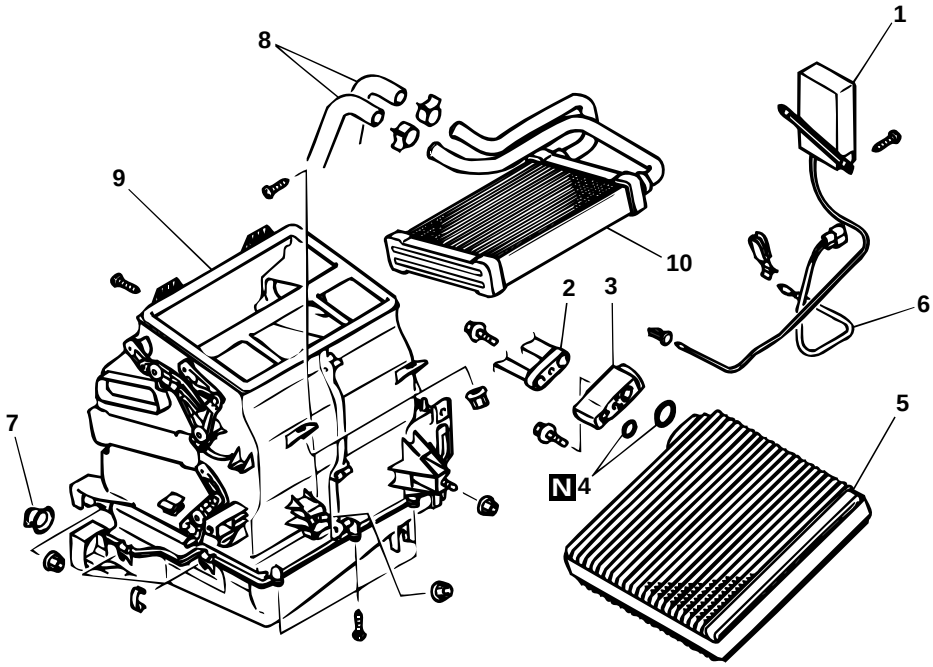

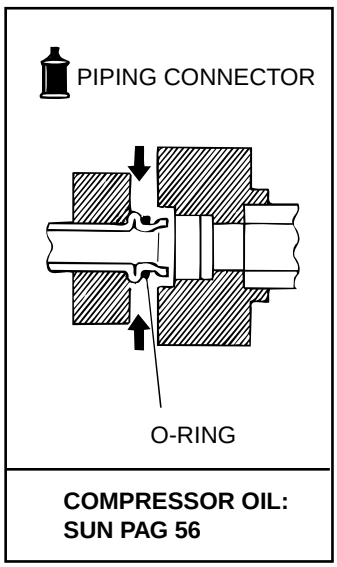

AC001400AB

REMOVAL STEPS

1. AUTOMATIC COMPRESSOR CONTROLLER <VEHICLES WITH A/C>
   - REFRIGERANT DISCHARGING AND CHARGING <VEHICLES WITH A/C> (REFER TO P.55-21.)

<<A>>

2. A/C PIPE <VEHICLES WITH A/C>
3. EXPANSION VALVE
4. O-RING <VEHICLES WITH A/C>

>>A<<

5. EVAPORATOR
6. THERMISTOR SENSOR
7. DRAIN HOSE <VEHICLES WITH A/C>

REMOVAL STEPS (Continued)

- ENGINE COOLANT DRAINING AND REFILLING [REFER TO GROUP 00E, MAINTENANCE SERVICE - ENGINE COOLANT (CHANGE) P.00-52.]

8. HEATER HOSE

- RADIO AND TAPE PLAYER (REFER TO GROUP 54A, AUDIO SYSTEM - RADIO, TAPE PLAYER, CD PLAYER AND CD AUTO CHANGER P.54A-180.)
- HEATER CONTROL ASSEMBLY (REFER TO P.55-26.)
- INSTRUMENT PANEL ASSEMBLY (REFER TO GROUP 52A, INSTRUMENT PANELP.52A-4.)
- FRONT DECK CROSSMEMBER

TSB Revision

REMOVAL STEPS (Continued)

- FLOOR CONSOLE (REFER TO GROUP 52A, FLOOR CONSOLE P.52A-9.)
- INSTRUMENT PANEL CENTER REINFORCEMENT (REFER TO GROUP 52A, INSTRUMENT PANEL P.52A-4.)
- FOOT DUCT (LH/RH) (REFER TO P.55-44.)

9. HEATER/COOLER UNIT
10. HEATER CORE

REMOVAL SERVICE POINT

<<A>> A/C PIPE REMOVAL

⚠ CAUTION

Seal the pipes completely, otherwise the compressor oil and receiver will absorb water vapor easily, possibly damaging the compressor and deteriorating performance.
Plug the disconnected pipe and the evaporator nipple to prevent foreign material from getting into them.

INSTALLATION SERVICE POINT

>>A<< EVAPORATOR INSTALLATION

When replacing the evaporator, refill with a specified amount of compressor oil and install it.

Compressor oil: SUN PAG 56

Quantity: 60 cm^3 (2.0 floz)

BLOWER ASSEMBLY AND RESISTOR

M1551002800063

REMOVAL AND INSTALLATION

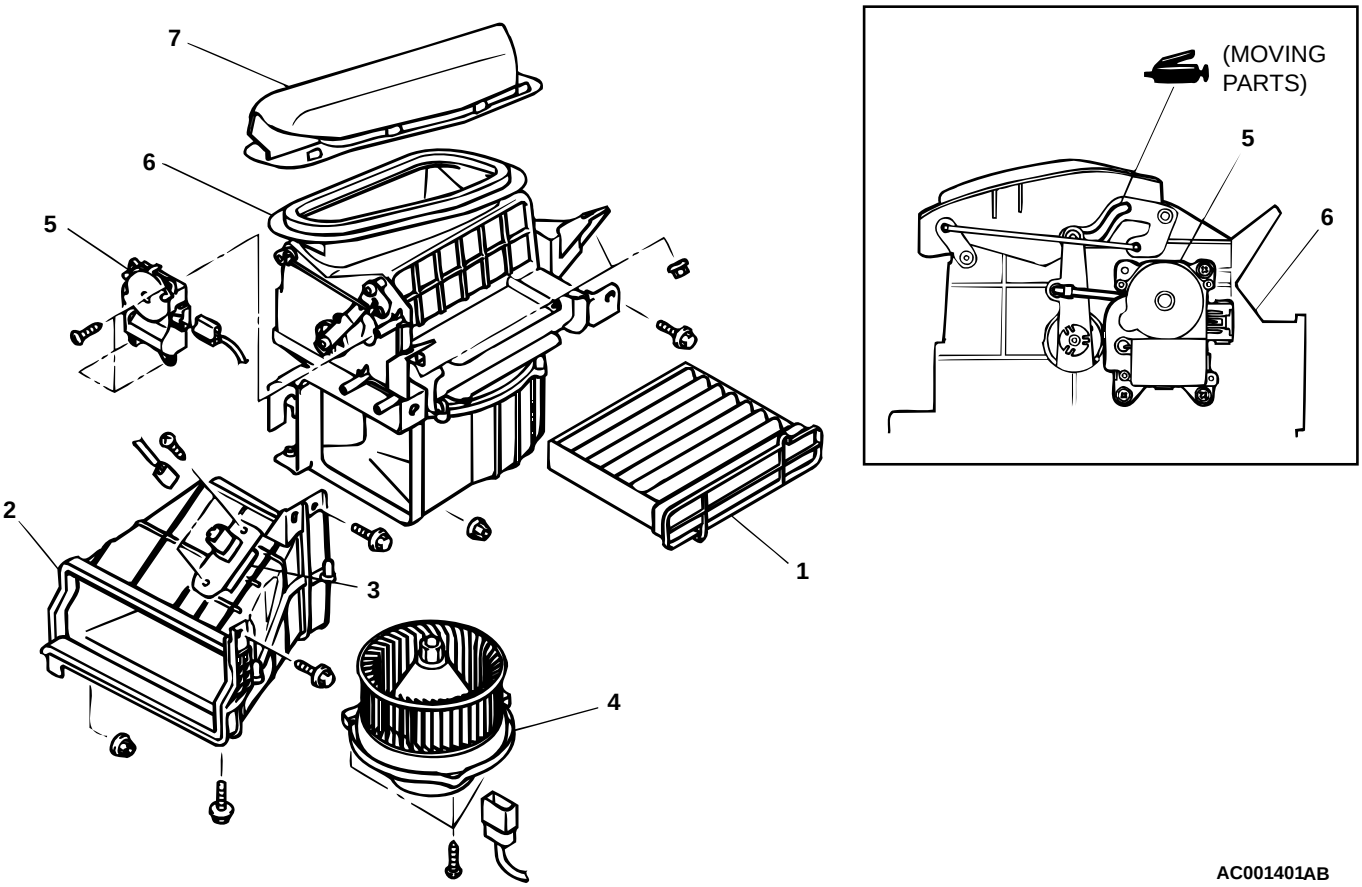

REMOVAL STEPS

- GLOVE BOX (OUTER AND INNER) (REFER TO GROUP 52A, INSTRUMENT PANEL P.52A-4.)

1. AIR PURIFIER ASSEMBLY
2. JOINT DUCT
3. RESISTOR

REMOVAL STEPS (Continued)

4. BLOWER FAN AND MOTOR
5. INSIDE/OUTSIDE AIR CHANGEOVER DAMPER MOTOR
6. BLOWER ASSEMBLY
7. BLOWER DUCT

INSPECTION

M1551002900060

RESISTOR CHECK

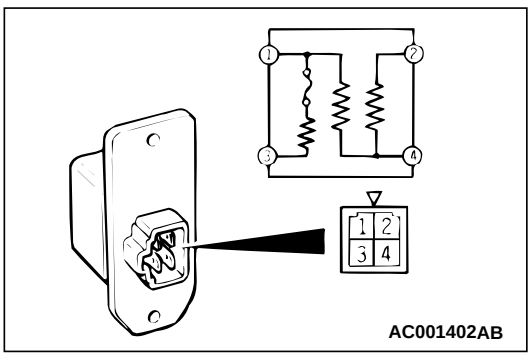

Use an ohmmeter to measure the resistance between the terminals. Check that the measured value is at the standard value.

Standard value:

MEASUREMENT TERMINAL	STANDARD VALUE Ω
Between terminals 3 and 2 (LO)	2.3
Between terminals 3 and 4 (ML)	1.1
Between terminals 3 and 1 (MH)	0.4

BLOWER FAN AND MOTOR CHECK

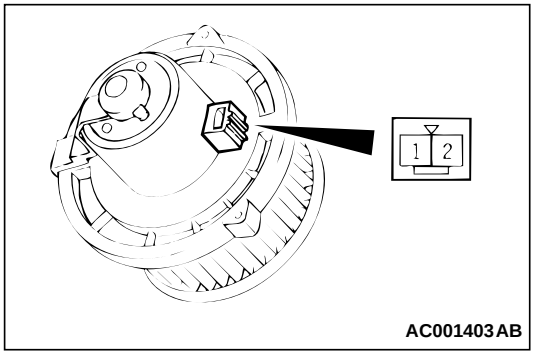

When battery voltage is applied between the terminals, check that the motor operates. Also, check that there is no abnormal noise.

INSIDE/OUTSIDE AIR CHANGEOVER DAMPER MOTOR CHECK

⚠ CAUTION

Cut off the battery voltage when the damper is in the inside/outside air position.

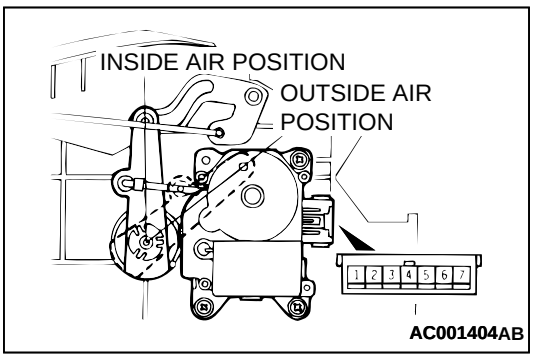

BATTERY CONNECTION TERMINALS	LEVER POSITION
1-7	Move to the outside air position
1-5	Move to the inside air position

COMPRESSOR ASSEMBLY AND TENSION PULLEY

M1552004100041

REMOVAL AND INSTALLATION

Pre-removal Operation

- Refrigerant Discharging (Refer to P.55-21.)

Post-installation Operation

- Drive Belt Tension Adjustment (Refer to GROUP 00E, Maintenance Service – Drive Belt P.00-40.)
- Refrigerant Charging (Refer to P.55-21.)

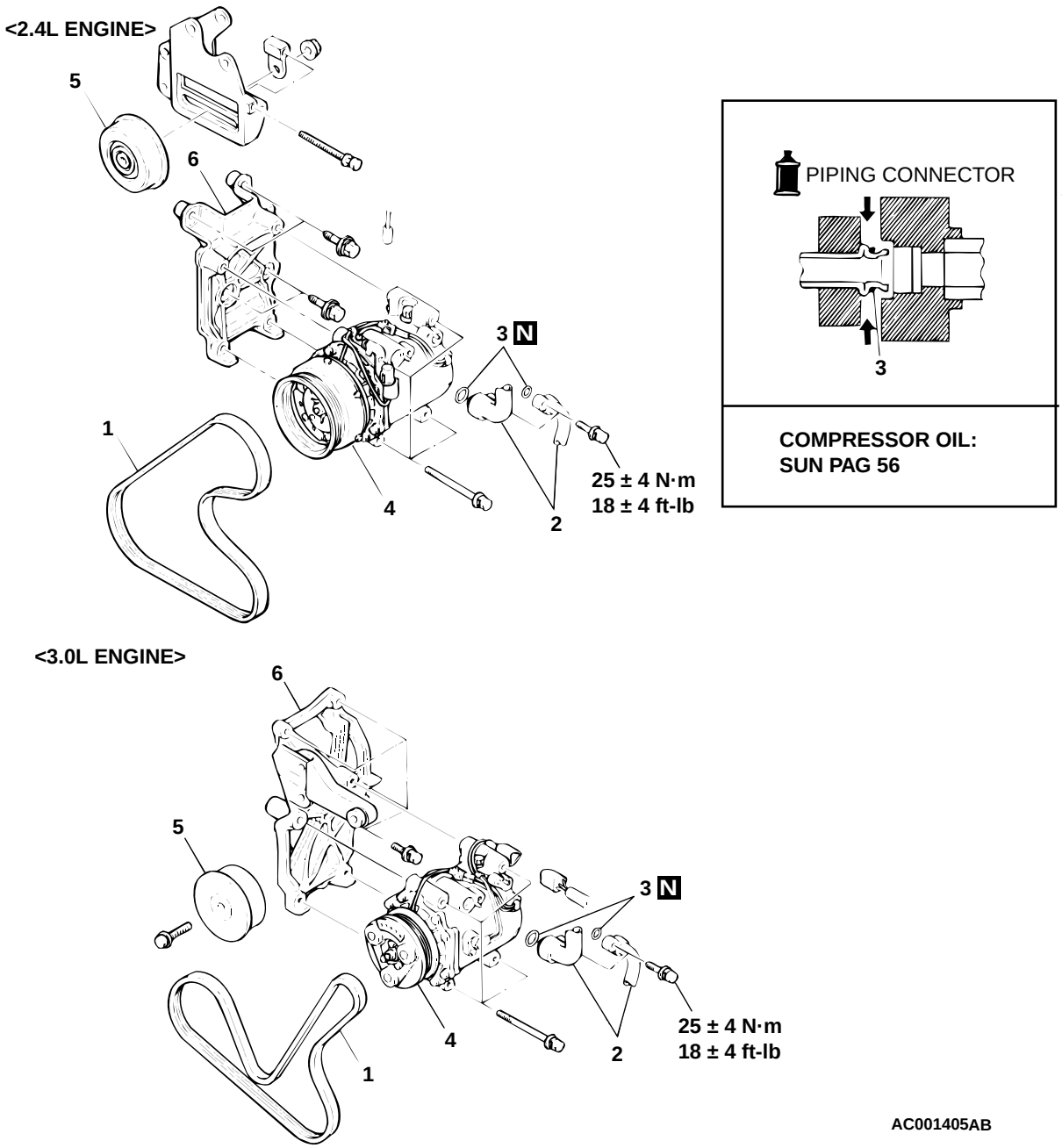

REMOVAL STEPS

- CONDENSER FAN MOTOR <3.0L ENGINE> (REFER TO P.55-40.)

<<A>> 1. DRIVE BELT

<<B>>

<<C>> >>A<<

REMOVAL STEPS (Continued)

2. DISCHARGE HOSE AND SUCTION HOSE
3. O-RING
4. COMPRESSOR
5. TENSION PULLEY
6. COMPRESSOR BRACKET

TSB Revision

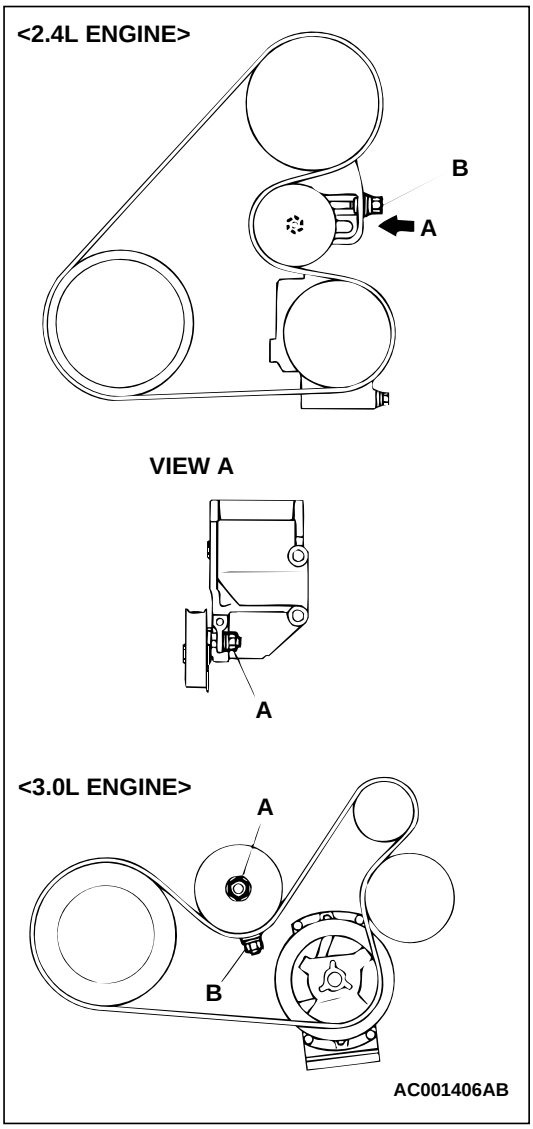

REMOVAL SERVICE POINTS

<<A>> DRIVE BELT REMOVAL

1. Loosen the nut "A" for holding.
2. Loosen the bolt "B" for adjustment.
3. Remove the drive belt.

<<B>> DISCHARGE HOSE AND SUCTION HOSE DISCONNECTION

⚠ CAUTION

Seal the hoses completely, otherwise the compressor oil and receiver will absorb water vapor easily, possibly damaging the compressor and deteriorating performance.
Plug the disconnected hose and compressor nipple to prevent foreign matter from getting into them.

<<C>> COMPRESSOR REMOVAL

When removing the compressor, be careful not to spill the compressor oil.

INSTALLATION SERVICE POINT

>>A<< COMPRESSOR INSTALLATION

If a new compressor is installed, first adjust the amount of oil according to the procedures described below, and then install the compressor.

1. Measure the amount [X cm^3 (X floz)] of oil within the removed compressor.
2. Drain (from the new compressor) the amount of oil calculated according to the following formula, and then install the new compressor.
   New compressor oil amount

   100 cm^3 – X cm^3 = Y cm^3 (3.4 floz – X floz = Y floz)

NOTE: Y cm^3 (Y floz) indicates the amount of oil in the refrigerant line, the condenser, the evaporator, etc.

NOTE: When replacing the following parts at the same times as the compressor, subtract the rated oil amount of the each part from Y cm^3 (Y floz) and discharge from the new compressor.

Quantity:

- **Evaporator: 60 cm^3 (2.0 floz)**
- **Condenser: 15 cm^3 (0.5 floz)**
- **Suction hose: 10 cm^3 (0.3 floz)**
- **Receiver: 10 cm^3 (0.3 floz)**

INSPECTION

M1552009300040

REFRIGERANT TEMPERATURE SWITCH CHECK

When the A/C is off, check that there is continuity between the refrigerant-temperature switch terminals. If not, replace the switch.

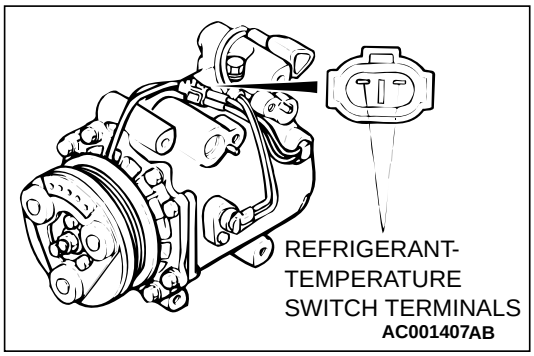

COMPRESSOR MAGNETIC CLUTCH OPERATION INSPECTION

M1552008500096

Connect the battery (+) terminal to the compressor magnetic clutch connector terminal 3, and ground the battery (–) terminal to the body of the compressor. The condition is normal if the sound of the magnetic clutch (click) can be heard.

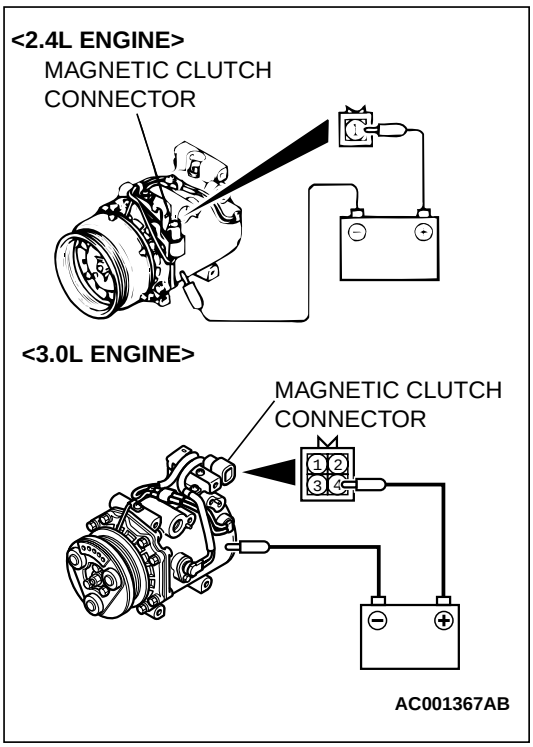

REVOLUTION PICK-UP SENSOR CHECK

M1552004500049

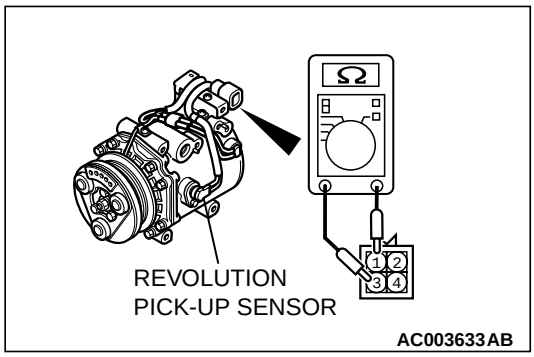

Measure the resistance between terminals 1 and 3. Check that the measured value is at the standard value.

Standard value: 405 ± 35 Ω when the ambient temperature is 20 °C (68 °F)

MAGNETIC CLUTCH

DISASSEMBLY AND ASSEMBLY

M1552004600068

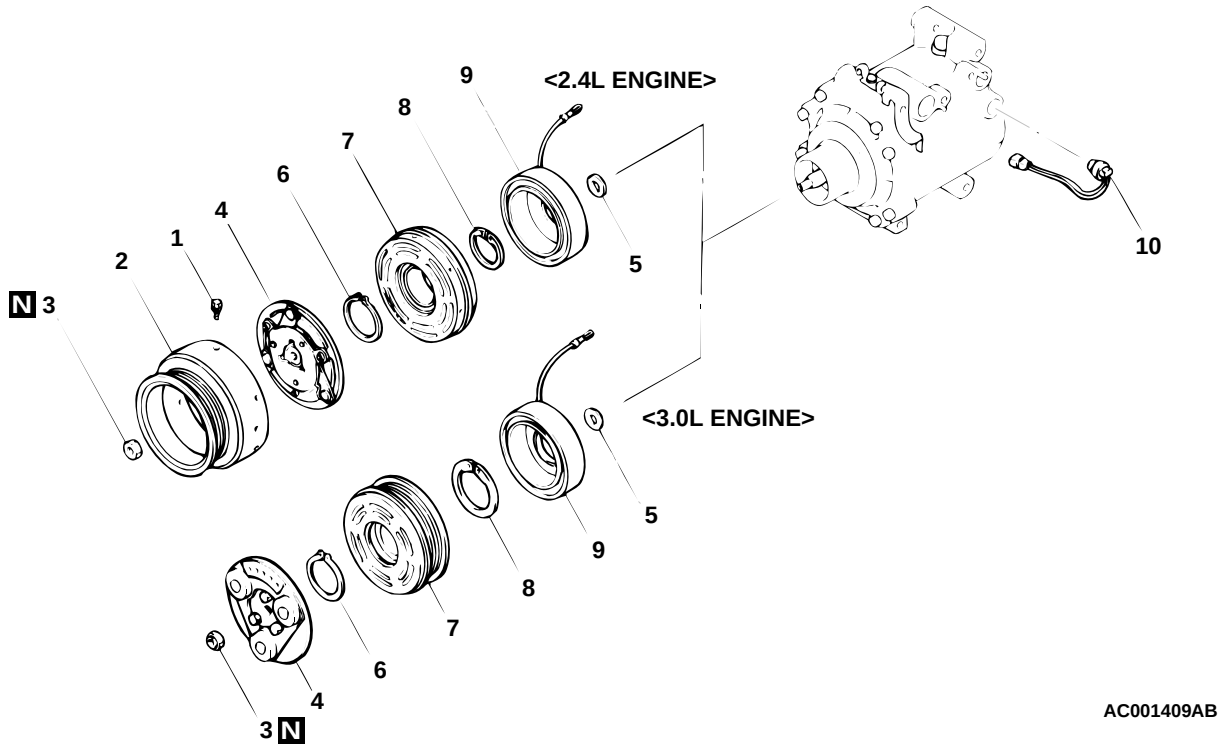

MAGNETIC CLUTCH DISASSEMBLY STEPS

1. BOLT <2.4L ENGINE>
2. PULLEY <2.4L ENGINE>
- >>E<< • AIR GAP ADJUSTMENT
- <<A>> >>D<< 3. NUT
- >>C<< 4. ARMATURE PLATE
5. SHIMS
- >>B<< 6. SNAP RING
7. ROTOR
8. SNAP RING
- >>A<< 9. CLUTCH COIL

REFRIGERANT TEMPERATURE SWITCH REMOVAL

10. REFRIGERANT TEMPERATURE SWITCH

Required Special Tools:

- MB991367: Special Spanner
- MB991386: Pin

TSB Revision

DISASSEMBLY SERVICE POINT

<<A>> NUT REMOVAL

Use special tools MB991367 and MB991386 to hold the magnetic clutch, and remove the nut.

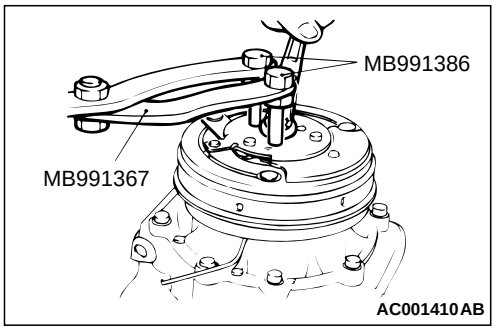

ASSEMBLY SERVICE POINTS

>>A<< CLUTCH COIL INSTALLATION

When installing the clutch coil to the A/C compressor body, install so that the pin hole of the A/C compressor body and the clutch coil projection are aligned.

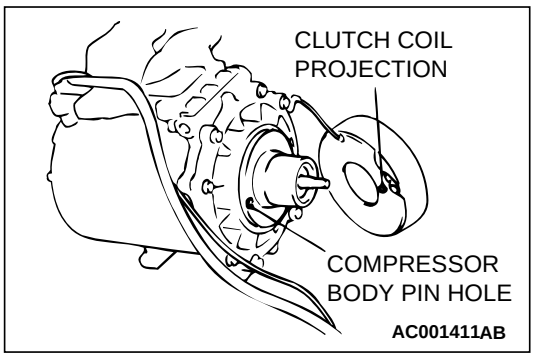

>>B<< SNAP RING INSTALLATION

Install the snap ring so that the tapered surface is to the outside.

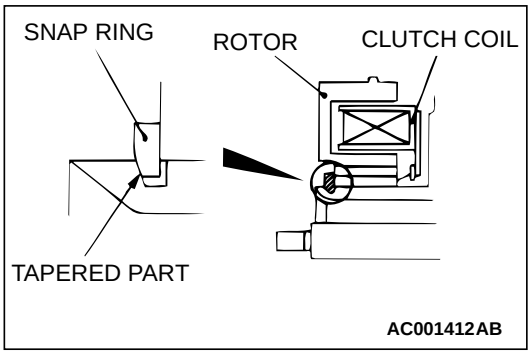

>>C<< ARMATURE PLATE INSTALLATION

Align the serration protrusion on the crankshaft with the notch on the armature and install.

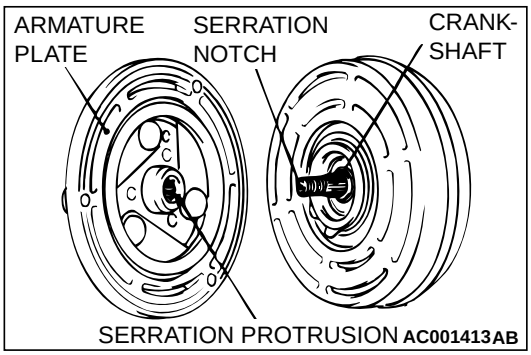

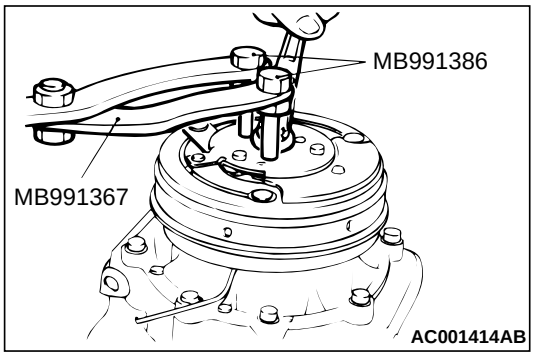

>>D<< NUT INSTALLATION

Use special tools MB991367 and MB991386 to hold the magnetic clutch, and tighten the nut in the same manner as for removal.

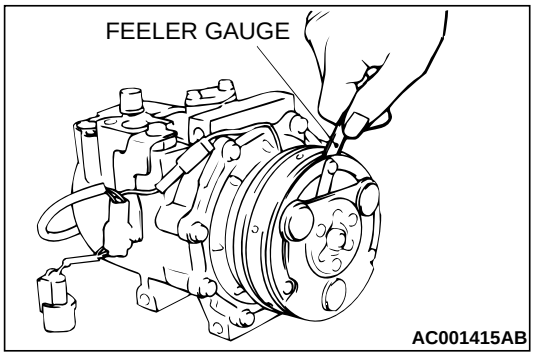

>>E<< AIR GAP ADJUSTMENT

Check whether or not the air gap of the clutch is within the standard value.

Standard value:

- **<2.4L engine> 0.3 – 0.5 mm (0.012 – 0.020 inch)**
- **<3.0L engine> 0.4 – 0.6 mm (0.016 – 0.024 inch)**

NOTE: If there is a deviation of the air gap from the standard value, make the necessary adjustment by adjusting the number of shims.

CONDENSER AND CONDENSER FAN MOTOR

M1552006700061

REMOVAL AND INSTALLATION

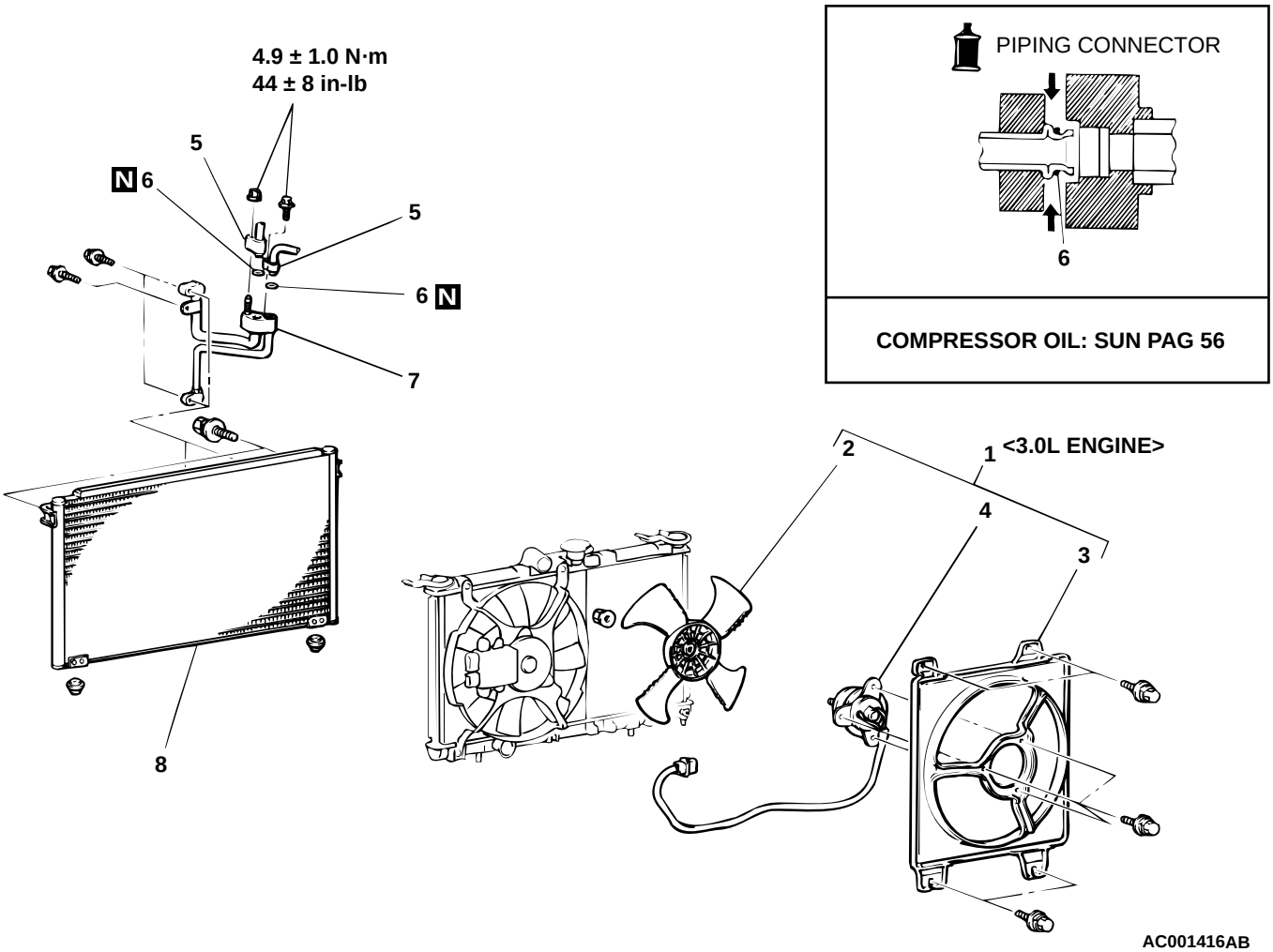

CONDENSER FAN MOTOR <3.0L ENGINE> REMOVAL STEPS

1. CONDENSER FAN MOTOR AND SHROUD ASSEMBLY
2. CONDENSER FAN
3. SHROUD
4. CONDENSER FAN MOTOR

CONDENSER REMOVAL STEPS

- REFRIGERANT DISCHARGING AND CHARGING (REFER TO P.55-21.)
- AIR CLEANER (REFER TO GROUP 15, AIR CLEANER P.15-5.)

<<A>>

CONDENSER REMOVAL STEPS (Continued)

- FRONT BUMPER ASSEMBLY, AIR GUIDE DUCT AND FRONT FOG LIGHT BRACKET (LH) (REFER TO GROUP 51, FRONT BUMPER P.51-3.)

5. DISCHARGE HOSE AND LIQUID PIPE A
6. O-RING
7. FITTING ASSEMBLY

>>A<<

8. CONDENSER

TSB Revision

REMOVAL SERVICE POINT

<<A>> LIQUID PIPE A/DISCHARGE HOSE DISCONNECTION

⚠ CAUTION

Seal the hoses completely, otherwise the compressor oil and receiver will absorb water vapor easily, possibly damaging the compressor and deteriorating performance.
Plug the disconnected pipe, hose and condenser nipple to prevent foreign material from getting into them.

INSTALLATION SERVICE POINT

>>A<< CONDENSER INSTALLATION

When replacing the condenser, refill it with a specified amount of compressor oil and install it. (to the vehicle).

- **Compressor oil: SUN PAG 56**
- **Quantity: 15 cm^3 (0.5 floz)**

INSPECTION

M1552006800068

CONDENSER FAN MOTOR CHECK

Check to be sure that the condenser fan motor operates when battery voltage is applied to terminal 2 and terminal 1 grounded.

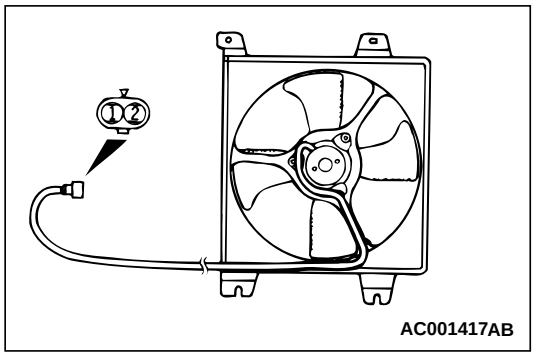

REFRIGERANT LINE

M1552006400071

REMOVAL AND INSTALLATION

Pre-removal and Post-installation Operation

- Refrigerant Discharging and Charging (Refer to P.55-21.)

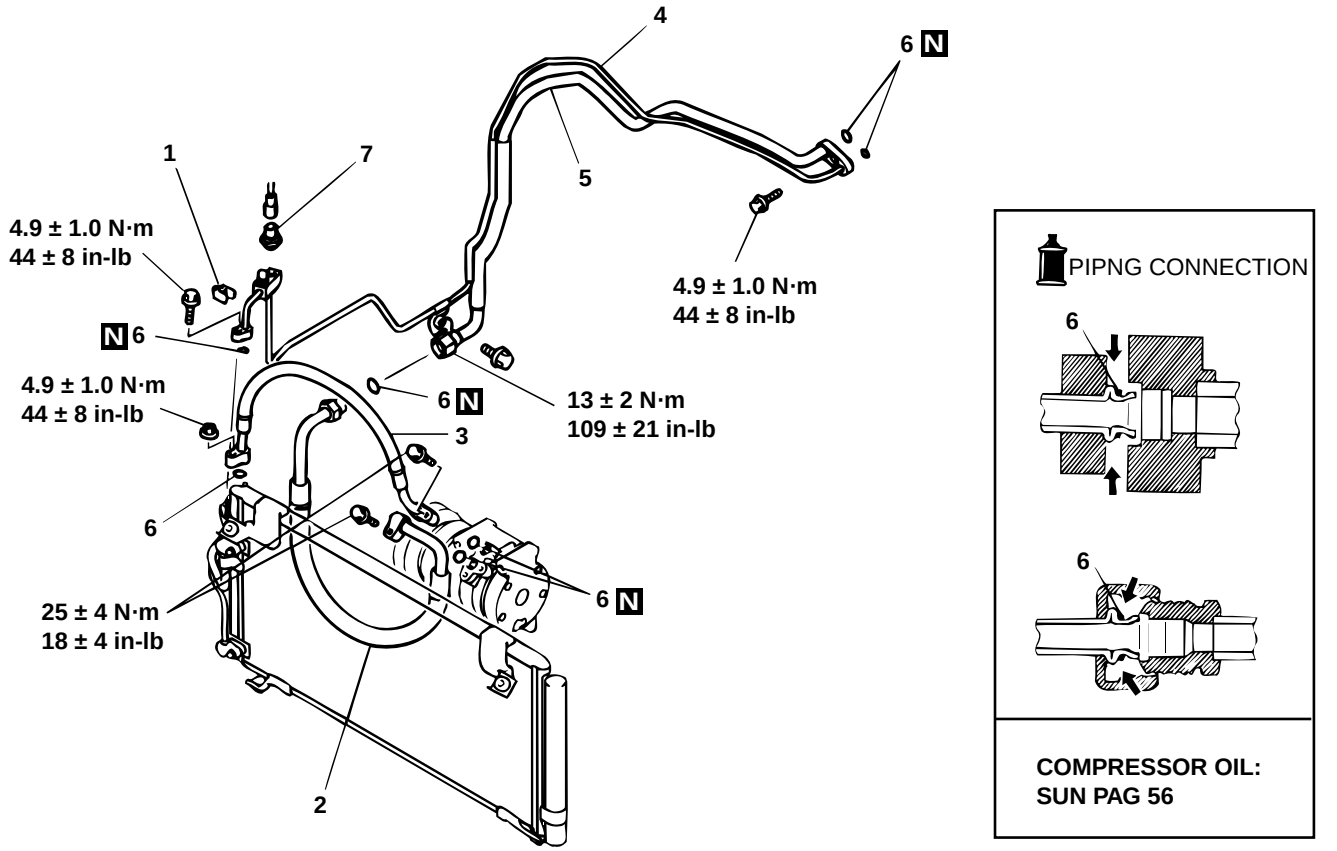

AC001418AB

REMOVAL STEPS

1. CLAMP
<<A>> >>A<< 2. SUCTION HOSE
<<A>> 3. DISCHARGE HOSE
<<A>> 4. LIQUID PIPE A

REMOVAL STEPS (Continued)

<<A>> 5. A/C PIPE
6. O-RING
7. DUAL PRESSURE SWITCH

REMOVAL SERVICE POINT

<<A>> HOSE/PIPE DISCONNECTION

⚠ CAUTION

Seal the hoses completely, otherwise the compressor oil and receiver will absorb water vapor easily, possibly damaging the compressor and deteriorating performance.
Plug the disconnected hose, the condenser, the evaporator and the compressor nipple to prevent foreign material from getting into them.

INSTALLATION SERVICE POINT

>>A<< SUCTION HOSE INSTALLATION

When replacing the suction hose, refill them with a specified amount of compressor oil, and then install them.

Compressor oil: SUN PAG 56

Quantity:

- **Suction hose: 10 cm^3 (0.3 floz)**

VENTILATORS

M1553001600073

REMOVAL AND INSTALLATION

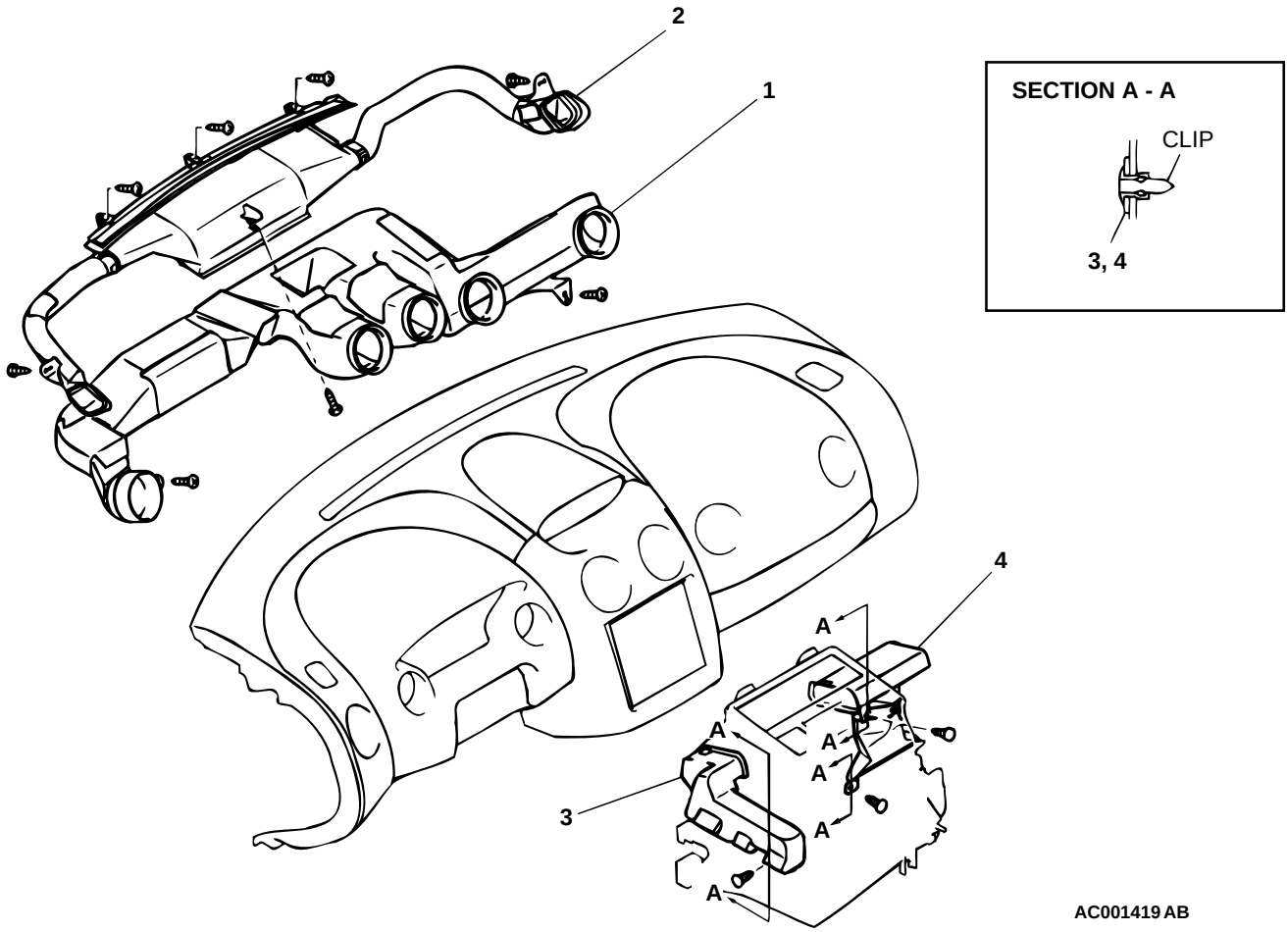

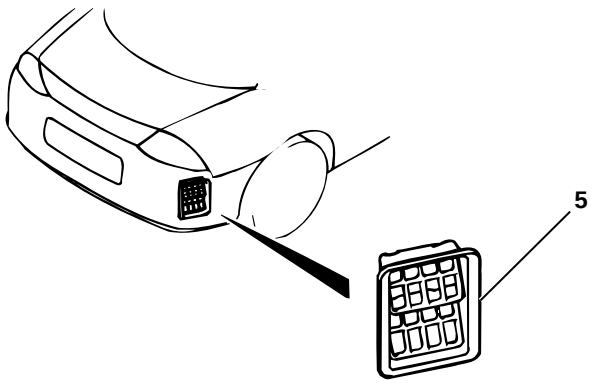

DISTRIBUTION DUCT AND DEFROSTER NOZZLE ASSEMBLY REMOVAL STEPS

- INSTRUMENT PANEL ASSEMBLY (REFER TO GROUP 52A, INSTRUMENT PANEL P.52A-4.)

1. DISTRIBUTION DUCT
2. DEFROSTER NOZZLE ASSEMBLY

TSB Revision

FOOT DUCT REMOVAL STEPS

- CENTER PANEL ASSEMBLY, INSTRUMENT PANEL UNDER COVER, GLOVE BOX OUTER AND GLOVE BOX INNER (REFER TO GROUP 52A, INSTRUMENT PANEL P.52A-9.)
- RADIO AND TAPE PLAYER (REFER TO GROUP 54A, AUDIO SYSTEM - RADIO, TAPE PLAYER, CD PLAYER AND CD AUTO CHANGER P.54A-180.)
- HEATER CONTROL ASSEMBLY (REFER TO P.55-26.)
- NSTRUMENT PANEL CENTER REINFORCEMENT (REFER TO GROUP 52A, INSTRUMENT PANEL P.52A-4.)

3. FOOT DUCT (LH)

FOOT DUCT REMOVAL STEPS

- JOINT DUCT (REFER TO P.55-32.)

4. FOOT DUCT (RH)

REAR VENTILATION DUCT ASSEMBLY REMOVAL STEPS

- REAR BUMPER ASSEMBLY (REFER TO GROUP 51, REAR BUMPER P.51-6.)

5. REAR VENTILATION DUCT ASSEMBLY

NOTE: For the front deck garnish, refer to GROUP 51, Windshield Wiper and Washer P.51-15.

NOTE: For the center/side air outlet assembly and side defroster grille, refer to GROUP 52A, Instrument Panel P.52A-4.

SPECIFICATIONS

FASTENER TIGHTENING SPECIFICATIONS

M1552012100057

ITEMS	SPECIFICATIONS
A/C pipe mounting bolt (heater/cooler unit side)	4.9 ± 1.0 N·m (44 ± 8 in-lb)
A/C pipe mounting bolt (condenser side)	4.9 ± 1.0 N·m (44 ± 8 in-lb)
A/C pipe mounting nut (suction hose side)	13 ± 2 N·m (109 ± 21 in-lb)
Discharge hose mounting bolt (compressor side)	25 ± 4 N·m (18 ± 4 ft-lb)
Discharge hose mounting nut (condenser side)	4.9 ± 1.0 N·m (44 ± 8 in-lb)
Suction hose mounting bolt (compressor side)	25 ± 4 N·m (18 ± 4 ft-lb)

GENERAL SPECIFICATIONS

M1552000200046

ITEMS			MANUAL HEATER	MANUAL AIR CONDITIONING
Heater/cooler unit			Full-air mix type providing stratified cool and warm air flows	Full-air mix type providing stratified cool and warm air flows
Heater control			Dial type	Dial type
Air conditioning switch			-	Push-button type
Compressor			-	MSC90C (Scroll type)
Dual pressure switch kPa (psi)	High-pressure switch	ON → OFF	-	2,942 (426.7)
		OFF → ON	-	2,354 (341.4)
	Low-pressure switch	ON → OFF	-	196 (28.4)
		OFF → ON	-	221 (32.1)
Refrigerant	Type		-	R134a (HFC-134a)
	Amount g (oz)		-	Approximately 415 – 435 (14.6 – 15.3)

SERVICE SPECIFICATIONS

M1552000300065

ITEMS		STANDARD VALUE
Idle speed r/min	2.4L engine	750 ± 100*
	3.0L engine	700 ± 100*
Idle-up speed r/min		850 ± 100*
Resistor (for blower motor) Ω	LO	2.3
	ML	1.1
	MH	0.4
Air gap (magnetic clutch) mm (in)	2.4L engine	0.3 – 0.5 (0.012 – 0.020)
	3.0L engine	0.4 – 0.6 (0.016 – 0.024)

NOTE: The rpm marked by an asterisk should be checked 4 minutes after idling begins.

LUBRICANTS

M1552000400062

ITEMS	SPECIFIED LUBRICANTS	QUANTITY
Each connection of refrigerant line	SUN PAG 56	As required
Compressor refrigerant unit lubricant cm^3 (floz)	SUN PAG 56	100 (3.4)