GROUP 23A

AUTOMATIC TRANSAXLE

CONTENTS

GENERAL DESCRIPTION. 23A-3

AUTOMATIC TRANSAXLE DIAGNOSIS 23A-15

- DIAGNOSTIC TROUBLESHOOTING FLOW 23A-15
- INTRODUCTION TO A/T DIAGNOSIS 23A-15
- A/T DIAGNOSTIC TROUBLESHOOTING STRATEGY. 23A-16
- DIAGNOSTIC FUNCTION 23A-16
- HOW TO INITIALIZE A/T LEARNED VALUE 23A-20
- FAIL-SAFE/BACKUP FUNCTION. 23A-21
- ROAD TEST 23A-22
- TORQUE CONVERTER STALL TEST 23A-36
- HYDRAULIC PRESSURE TESTS 23A-37
- HYDRAULIC CIRCUIT 23A-46
- LINE PRESSURE ADJUSTMENT 23A-64
- DIAGNOSTIC TROUBLE CODE CHART . . 23A-65
- SYMPTOM CHART. 23A-66
- DIAGNOSTIC TROUBLE CODE PROCEDURES. 23A-67
- SYMPTOM PROCEDURES 23A-301
- DATA LIST REFERENCE TABLE. 23A-362
- ACTUATOR TEST REFERENCE TABLE . . 23A-367
- INVECS-II CANCEL COMMAND (SPECIAL FUNCTION). 23A-367
- PCM TERMINAL VOLTAGE REFERENCE CHART FOR TRANSAXLE OPERATION 23A-368
- PCM TERMINAL RESISTANCE AND CONTINUITY INSPECTION CHART 23A-371
- INSPECTION PROCEDURE USING AN OSCILLOSCOPE 23A-371

DIAGNOSIS KEY INTERLOCK AND SHIFT LOCK MECHANISM 23A-373

- INTRODUCTION TO A/T KEY INTERLOCK AND SHIFT LOCK MECHANISMS 23A-373
- A/T KEY INTERLOCK AND SHIFT LOCK MECHANISMS DIAGNOSTIC TROUBLESHOOTING STRATEGY 23A-373
- SYMPTOM CHART 23A-373
- SYMPTOM PROCEDURES 23A-374

SPECIAL TOOLS 23A-381

Continued on next page

WARNINGS REGARDING SERVICING OF SUPPLEMENTAL RESTRAINT SYSTEM (SRS) EQUIPPED VEHICLES

⚠ WARNING

- ***Improper service or maintenance of any component of the SRS, or any SRS-related component, can lead to personal injury or death to service personnel (from inadvertent firing of the air bag) or to the driver and passenger (from rendering the SRS inoperative).***
- ***Service or maintenance of any SRS component or SRS-related component must be performed only at an authorized MITSUBISHI dealer.***
- ***MITSUBISHI dealer personnel must thoroughly review this manual, and especially its GROUP 52B - Supplemental Restraint System (SRS) before beginning any service or maintenance of any component of the SRS or any SRS-related component.***

NOTE
The SRS includes the following components: SRS air bag control unit, SRS warning light, front impact sensors, air bag module, side-airbag module, curtain air bag module, side impact sensors, seat belt pre-tensioners, clock spring, and interconnecting wiring. Other SRS-related components (that may have to be removed/installed in connection with SRS service or maintenance) are indicated in the table of contents by an asterisk (*).

ON-VEHICLE SERVICE. 23A-386
A/T CONTROL COMPONENT LAYOUT . . 23A-386
ESSENTIAL SERVICE 23A-389
TRANSMISSION FLUID CHECK 23A-389
TRANSMISSION FLUID CHANGE. 23A-390
FLUSHING COOLERS AND TUBES 23A-393
OIL COOLER FLOW CHECK. 23A-394
TRANSMISSION RANGE SWITCH CHECK 23A-396
TRANSMISSION RANGE SWITCH AND CONTROL CABLE ADJUSTMENT. 23A-396
AUTOMATIC TRANSAXLE CONTROL COMPONENT CHECK. 23A-398
CRANKSHAFT POSITION SENSOR CHECK 23A-398
TRANSMISSION FLUID TEMPERATURE SENSOR CHECK 23A-398
TRANSMISSION RANGE SWITCH CHECK 23A-399
STOPLIGHT SWITCH CHECK. 23A-399
A/T CONTROL RELAY CHECK 23A-399
SOLENOID VALVE CHECK 23A-400
SELECTOR LEVER OPERATION CHECK 23A-401
KEY INTERLOCK AND SHIFT LOCK MECHANISM CHECK 23A-402

TRANSAXLE CONTROL* 23A-404
REMOVAL AND INSTALLATION 23A-404
INSPECTION. 23A-406

A/T KEY INTERLOCK AND SHIFT LOCK MECHANISMS*. 23A-407
REMOVAL AND INSTALLATION 23A-407
INSPECTION. 23A-409

TRANSAXLE ASSEMBLY 23A-410
REMOVAL AND INSTALLATION 23A-410
REMOVAL AND INSTALLATION 23A-418

TRANSMISSION FLUID COOLER, HOSE AND PIPE 23A-427
REMOVAL AND INSTALLATION 23A-427
REMOVAL AND INSTALLATION 23A-429

SPECIFICATIONS 23A-432
FASTENER TIGHTENING SPECIFICATIONS. 23A-432
SERVICE SPECIFICATIONS 23A-433
LUBRICANT 23A-433

GENERAL DESCRIPTION

M1231000100504

F4A4B and F5A5A models have been established.

ITEM		SPECIFICATION	
Transaxle model		F4A4B-4-L3Z	F5A5A-4-C1Z
Engine		2.4L engine	3.8L engine
Torque converter	Type	3-element, 1-stage, 2-phase type	
	Lock-up	Provided	
	Stall torque ratio	1.9	1.7
	Application	3rd, 4th	4th, 5th
Transaxle type		4 forward speeds, 1 reverse speed, fully automatic	5 forward speeds, 1 reverse speed, fully automatic
Transaxle gear ratio	1st	2.842	3.789
	2nd	1.573	2.162
	3rd	1.000	1.421
	4th	0.688	1.000
	5th	–	0.686
	Reverse	2.214	3.117
Final reduction ratio (Differential gear ratio)		4.212	3.325
Clutch		Multi-disc type 3 sets	Multi-disc type 4 sets
Brake		Multi-disc type 2 sets	Multi-disc type 2 sets, band type 1 set
Manual control system		P-R-N-D (4 position) + Sport mode (up, down)	
Shift pattern control		Electronic control (INVECS - II)	
Hydraulic control during shifting		Electronic control (Each clutch hydraulically independently controlled)	
Torque converter clutch control		Electronic control	
Transmission fluid	Specified lubricants	DIAMOND ATF SP III	
	Quantity dm^3 (qt)	7.7 (8.1)	8.4 (8.9)

TRANSAXLE

The transaxle is made up of the torque converter and gear train. A 3-element, 1-stage, 2-phase torque converter with built-in torque converter clutch is used. The gear train of F4A4B transaxle consists of 3 sets of multi-disc type clutches, 2 sets of multi-disc type brakes, and 2 sets of planetary gears which are composed of a sun gear, carrier, annulus gear, and pinion gear. Also, the gear train of F5A5A transaxle consists of 4 sets of multi-disc type clutches, 2 sets of multi-disc type brakes, 1 set of band type brake, 1 set of one-way clutch, and 3 sets of planetary gears which consists of a sun gear, carrier, annulus gear, and pinion.

TRANSAXLE CONFIGURATION DRAWING

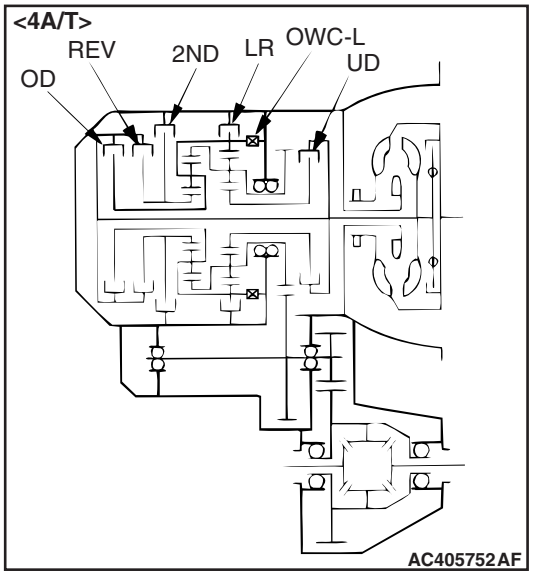

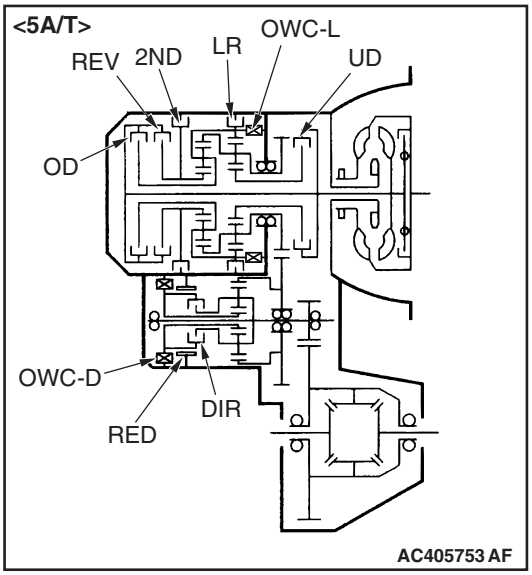

COMPONENTS AND FUNCTIONS

COMPONENT		FUNCTION
Underdrive clutch	UD	connects the input shaft to the underdrive sun gear.
Reverse clutch	REV	connects the input shaft to the reverse sun gear.
Direct clutch <5A/T>	DIR	connects the direct sun gear to the direct planetary carrier.
Overdrive clutch	OD	connects the input shaft to the overdrive planetary carrier.
Low-reverse brake	LR	holds the low-reverse annulus gear and the overdrive planetary carrier.
Second brake	2ND	holds the reverse sun gear.
Reduction brake <5A/T>	RED	holds the direct sun gear.
One-way clutch-L	OWC-L	restricts the rotation direction of the low-reverse annulus gear.
One-way clutch-D <5A/T>	OWC-D	controls rotation direction of the direct sun gear.

FUNCTION ELEMENT TABLE <4A/T>

OPERATING ELEMENT / TRANSMISSION RANGE			ENGINE START	PARKING MECHA-NISM	UNDER-DRIVE CLUTCH (UD)	REVERSE CLUTCH (REV)	OVER-DRIVE CLUTCH (OD)	LOW-REVERSE BRAKE (LR)	SECOND BRAKE (2ND)	ONE-WAY CLUTCH
P		Parking	OK	×	–	–	–	×	–	–
R		Reverse	–	–	–	×	–	×	–	–
N		Neutral	OK	–	–	–	–	×	–	–
D	Sport mode	1st	–	–	×	–	–	×*	–	×
		2nd	–	–	×	–	–	–	×	–
		3rd	–	–	×	–	×	–	–	–
		4th	–	–	–	–	×	–	×	–

×: Function element –: Not applicable

*NOTE: * operates only when the vehicle is stationary [at approximately 10 km/h (6.2 mph) or less].*

FUNCTION ELEMENT TABLE <5A/T>

OPERATING ELEMENT / SELECTOR LEVER POSITION			ENGINE START	PARK-ING MECHA-NISM	UNDER DRIVE CLUT-CH (UD)	REVER-SE CLUT-CH (REV)	OVER-DRIVE CLUT-CH (OD)	DIRECT CLUT-CH (DIR)	LOW-REVER-SE BRAKE (LR)	SECO-ND BRAKE (2ND)	REDUC-TION BRAKE (RED)	ONE-WAY CLUT-CH (OWC-L)	ONE-WAY CLUT-CH (OWC-D)
P		Parking	OK	×	–	–	–	–	×	–	×	–	–
R		Reverse	–	–	–	×	–	–	×	–	×	–	–
N		Neutral	OK	–	–	–	–	–	×	–	×	–	–
D	Sport mode	1st	–	–	×	–	–	–	×*	–	×	×	×
		2nd	–	–	×	–	–	–	–	×	×	–	×
		3rd	–	–	×	–	×	–	–	–	×	–	×
		4th	–	–	×	–	×	×	–	–	–	–	–
		5th	–	–	–	–	×	×	–	×	–	–	–

×: Function element –: Not applicable

*NOTE: * operates only when the vehicle is stationary [at approximately 10 km/h (6.2 mph) or less].*

SECTIONAL VIEW <4A/T>

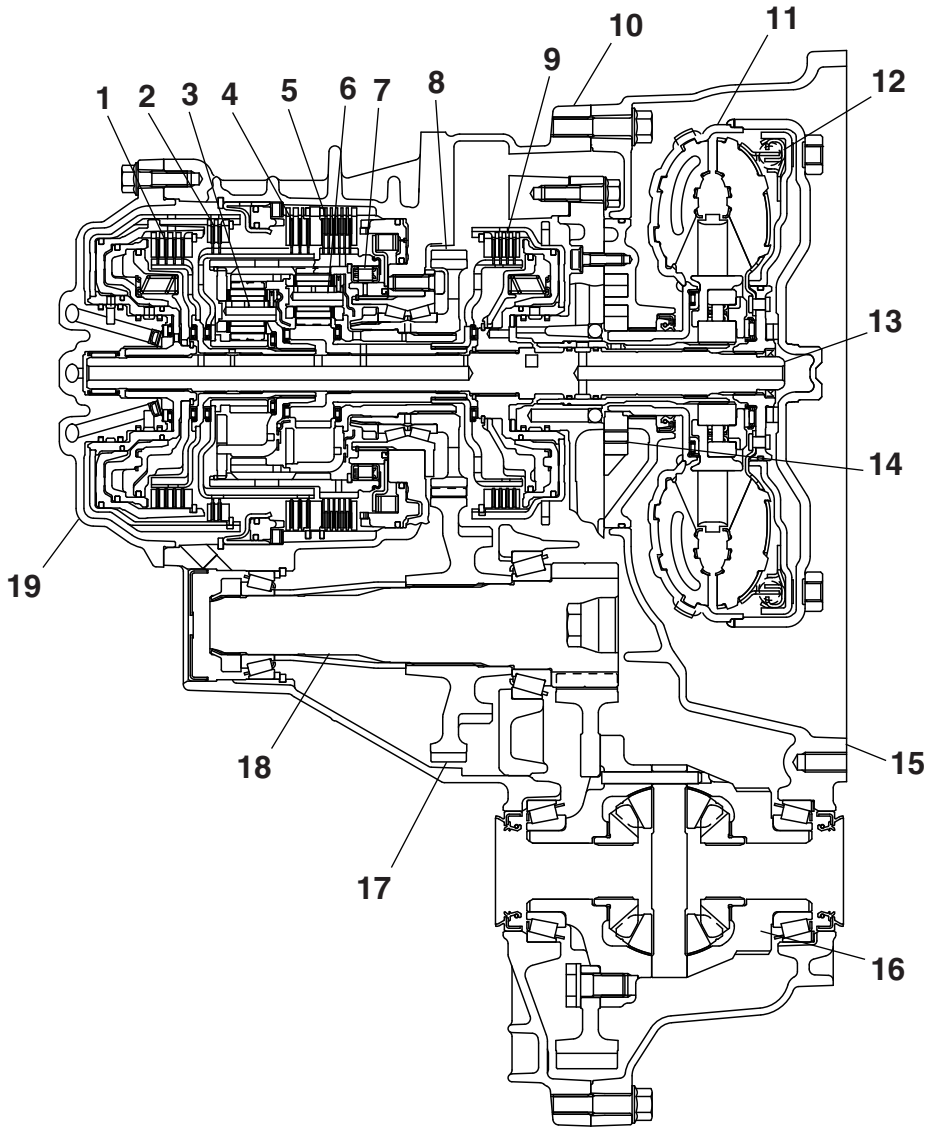

1. OVERDRIVE CLUTCH
2. REVERSE CLUTCH
3. OVERDRIVE PLANETARY CARRIER
4. SECOND BRAKE
5. LOW-REVERSE BRAKE
6. OUTPUT PLANETARY CARRIER
7. ONE-WAY CLUTCH-L
8. TRANSFER DRIVE GEAR
9. UNDERDRIVE CLUTCH
10. TRANSAXLE CASE
11. TORQUE CONVERTER
12. TORQUE CONVERTER CLUTCH
13. INPUT SHAFT
14. OIL PUMP
15. TORQUE CONVERTER HOUSING
16. DIFFERENTIAL
17. TRANSFER DRIVEN GEAR
18. OUTPUT SHAFT
19. REAR COVER

SECTIONAL VIEW <5A/T>

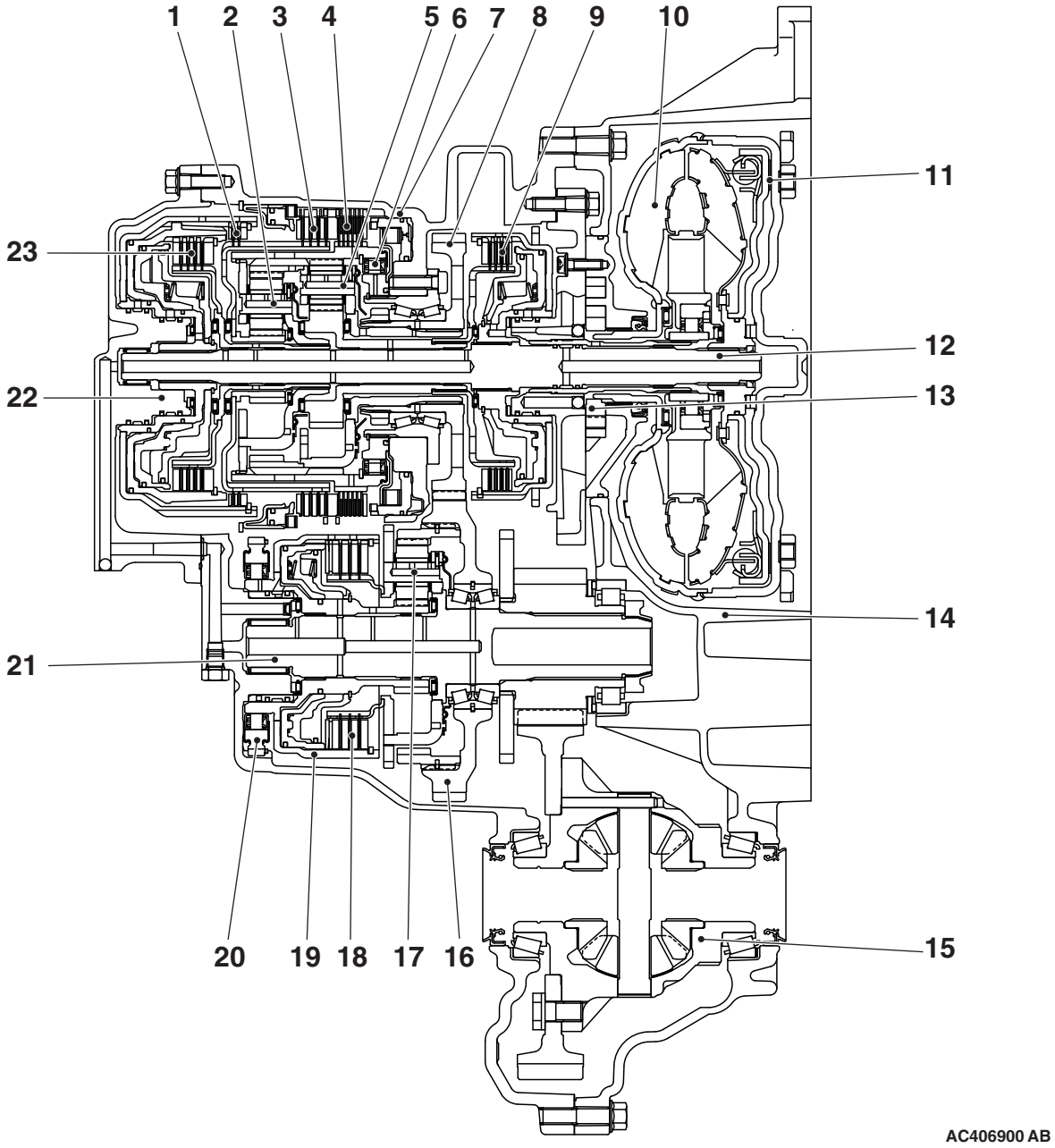

1. REVERSE CLUTCH
2. OVERDRIVE PLANETARY CARRIER
3. SECOND BRAKE
4. LOW-REVERSE BRAKE
5. OUTPUT PLANETARY CARRIER
6. ONE-WAY CLUTCH-L
7. TRANSAXLE CASE
8. TRANSFER DRIVE GEAR
9. UNDERDRIVE CLUTCH
10. TORQUE CONVERTER
11. TORQUE CONVERTER CLUTCH
12. INPUT SHAFT
13. OIL PUMP
14. TORQUE CONVERTER HOUSING
15. DIFFERENTIAL
16. TRANSFER DRIVEN GEAR
17. DIRECT PLANETARY GEAR SET
18. DIRECT CLUTCH
19. REDUCTION BRAKE
20. ONE-WAY CLUTCH-D
21. OUTPUT SHAFT
22. REAR COVER
23. OVERDRIVE CLUTCH

ELECTRONICALLY-CONTROLLED SYSTEM

INVECS-II

- When in drive ("D" range), the new automatic transaxle employs an innovative shift schedule to provide a high level of comfort and "easy driving style" that matches all driving conditions as well as the driver's driving style.
- INVECS-II features "Optimum Shift Control," which provides shift timing the average driver perceives to be the optimum timing under any road conditions. "Adaptive Shift Control" adjusts shift timing to match the driving habits and preferences of individual drivers.

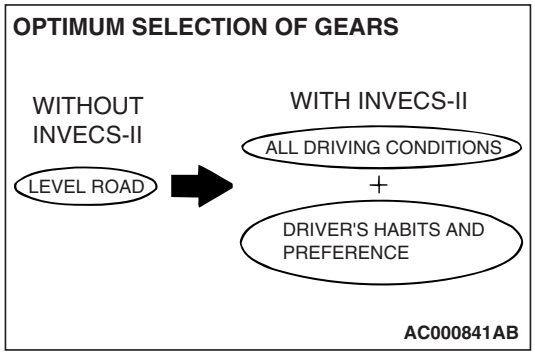

FEATURES

OPTIMUM SHIFT CONTROL

1. The shift patterns found satisfying by the typical driver for all ranges of driving are stored in the computer's memory. The computer uses this data to analyze road conditions and the driver's style of operation, and then sends the optimal shift patterns stored in its memory to best match the conditions.

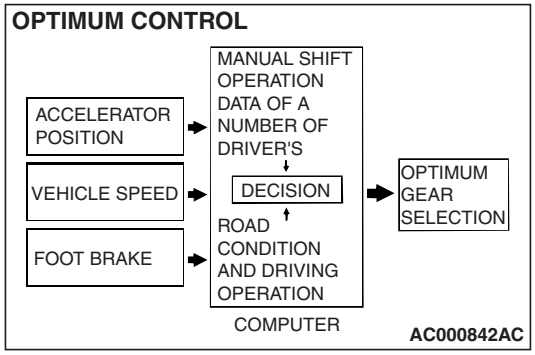

2. We introduce the latest control technologies with an innovative new algorithm called the "neural network" that works to imitate the decision-making processes of the human brain. The neural network links a wide variety of input data regarding road and operating conditions, and instantly makes accurate shift control decisions.

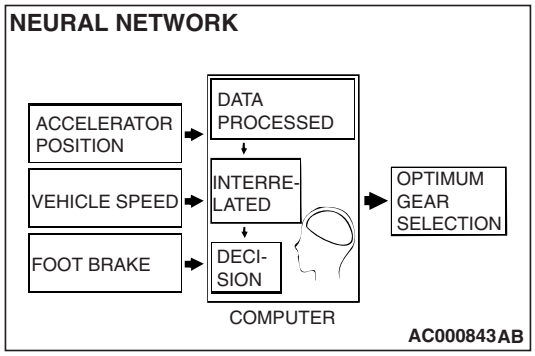

ADAPTIVE SHIFT CONTROL

1. The computer learns the driving habits and preferences of each individual driver by processing driving data on engine output, tire load, foot brake operation, etc. It then uses this data to adjust shift timing to best suit the driver's style.
2. If the computer determines from the driving patterns that the driver is one who enjoys a relaxed, unhurried style, it adjusts timing to execute up-shifts at a lower engine speed to provide a smooth, quiet ride. On the other hand, if the computer determines the driver to prefer a sporty ride, it adjusts timing to shift up at a higher engine speed to provide more powerful response.

ADAPTIVE SHIFT CONTROL DURING ACCELERATION

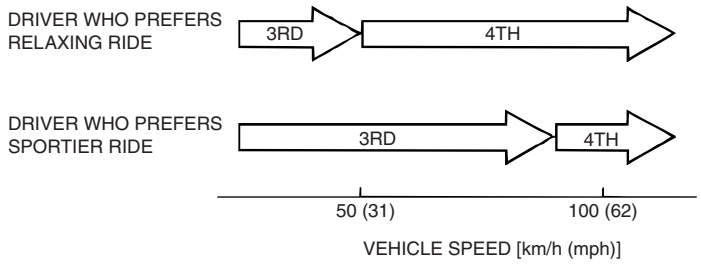

AC000844 AB

3. If the computer determines that the driver tends to apply the brakes often on a descending roadway, it adjusts timing to down shift sooner so that engine braking is more effectively applied. Conversely, if the computer determines that the driver does not brake much while driving downhill, it delays downshifting to minimize the effect of engine braking.

ADAPTIVE SHIFT CONTROL ON DOWNGRADES

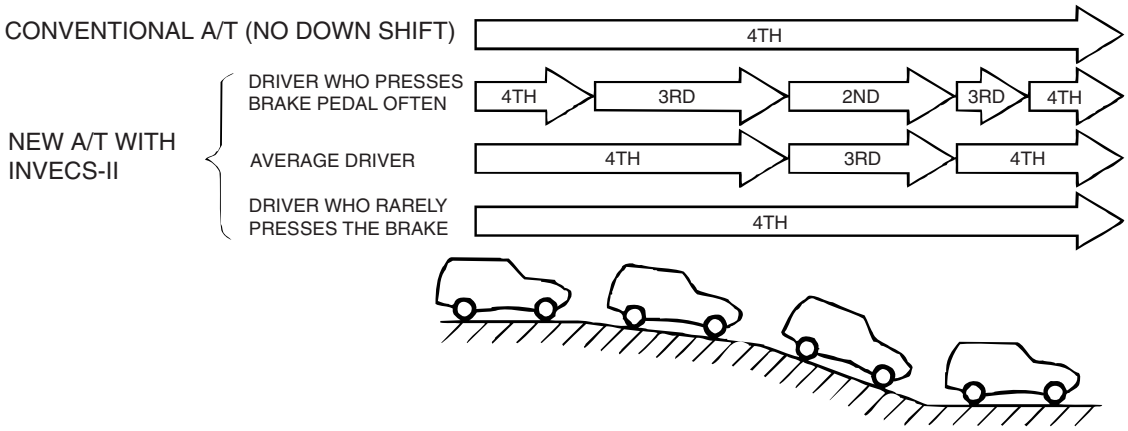

AC000845AB

SYSTEM CONSTRUCTION DIAGRAM

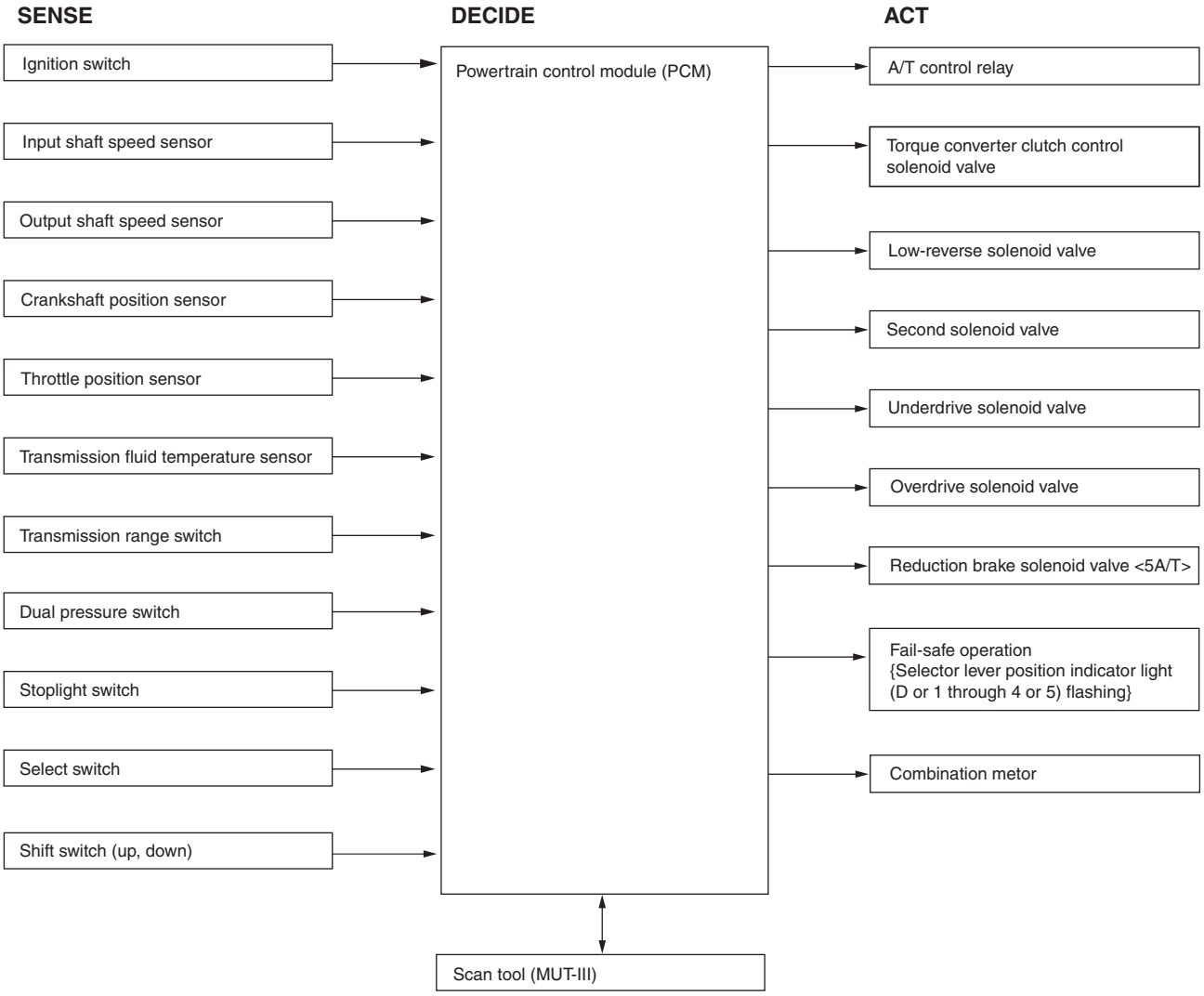

AC405770AD

SHIFT PATTERN CONTROL

UPSHIFT PATTERN <4A/T>

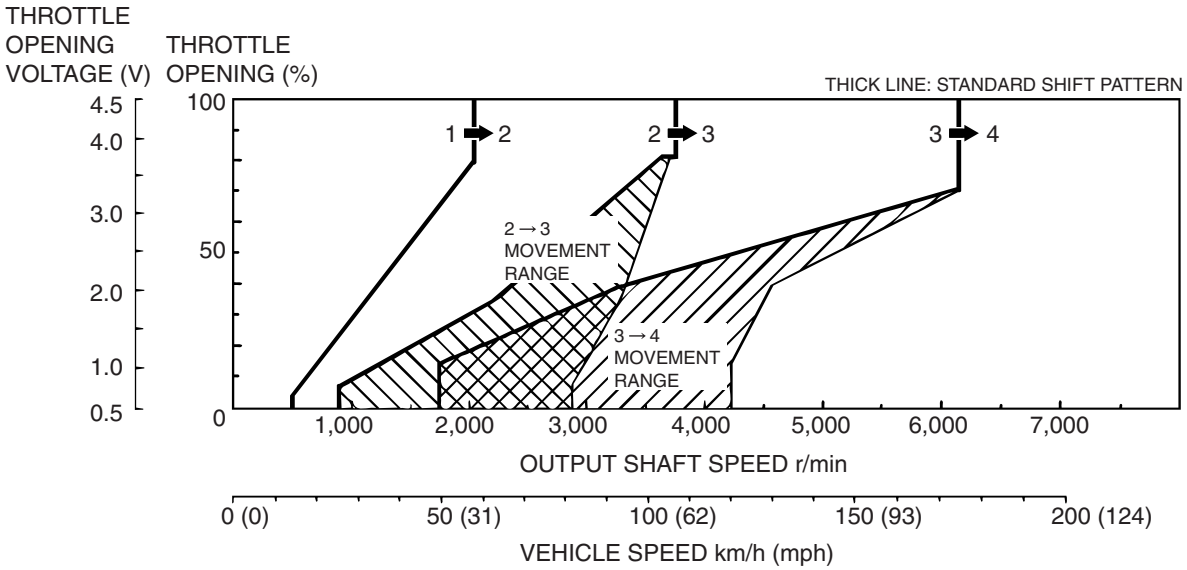

AC500232AB

NOTE: Within 2 -to- 3 and 3 -to- 4 movement ranges, the PCM adjusts shift points according to the driving conditions by memorizing the accelerator pedal stroke and braking timing.

DOWNSHIFT PATTERN <4A/T>

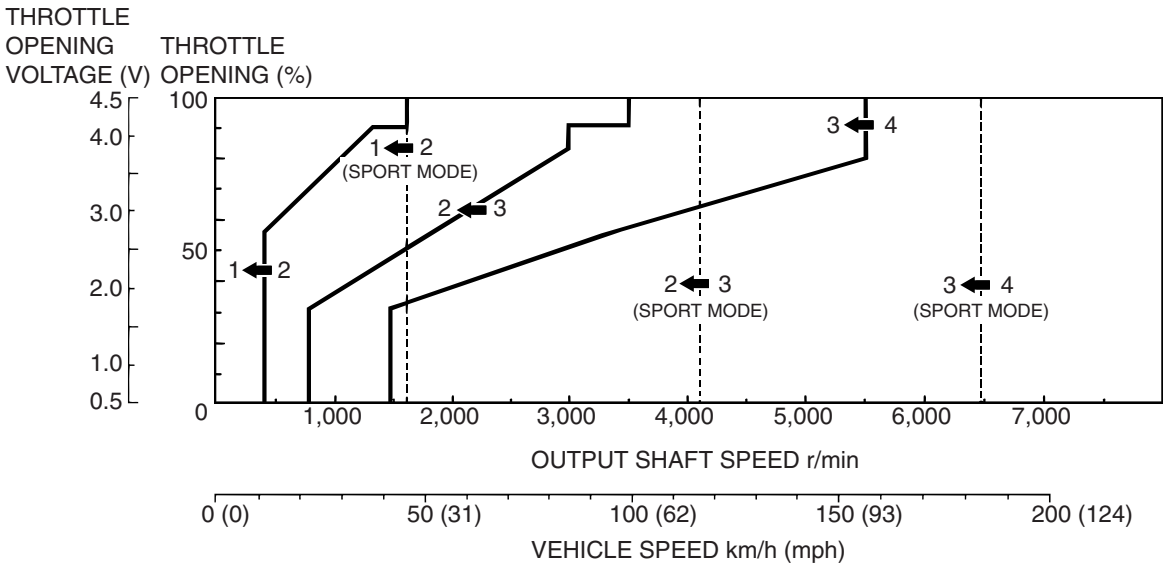

AC500233AB

UPSHIFT PATTERN <5A/T>

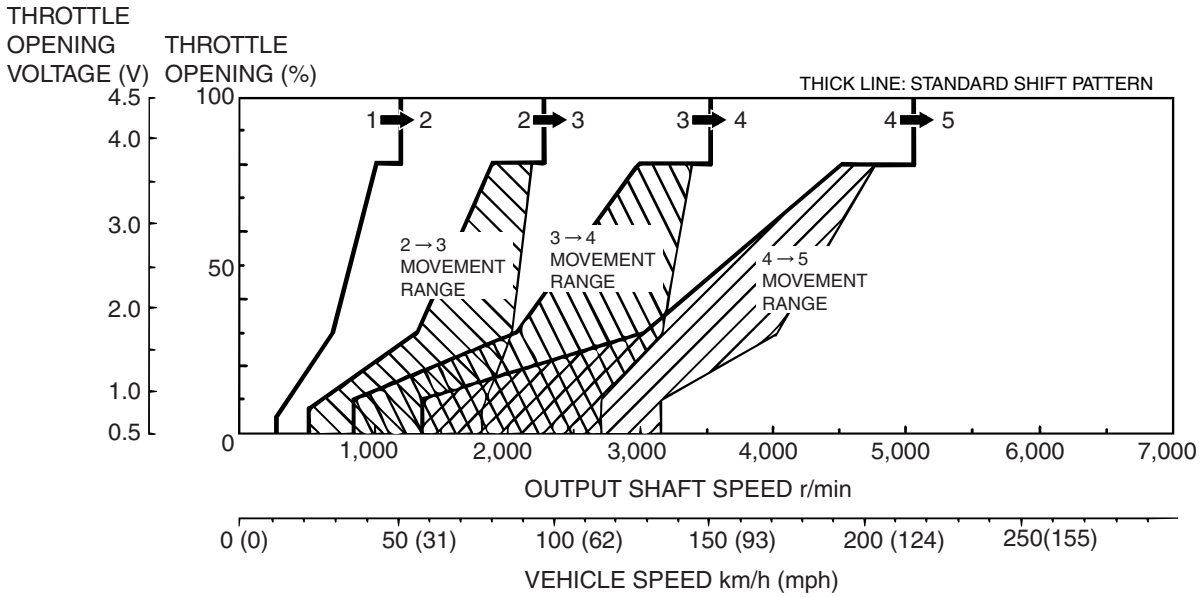

AC500234 AB

NOTE: Within 2 -to- 3 and 3 -to- 4 movement ranges, the PCM adjusts shift points according to the driving conditions by memorizing the accelerator pedal stroke and braking timing.

DOWNSHIFT PATTERN <5A/T>

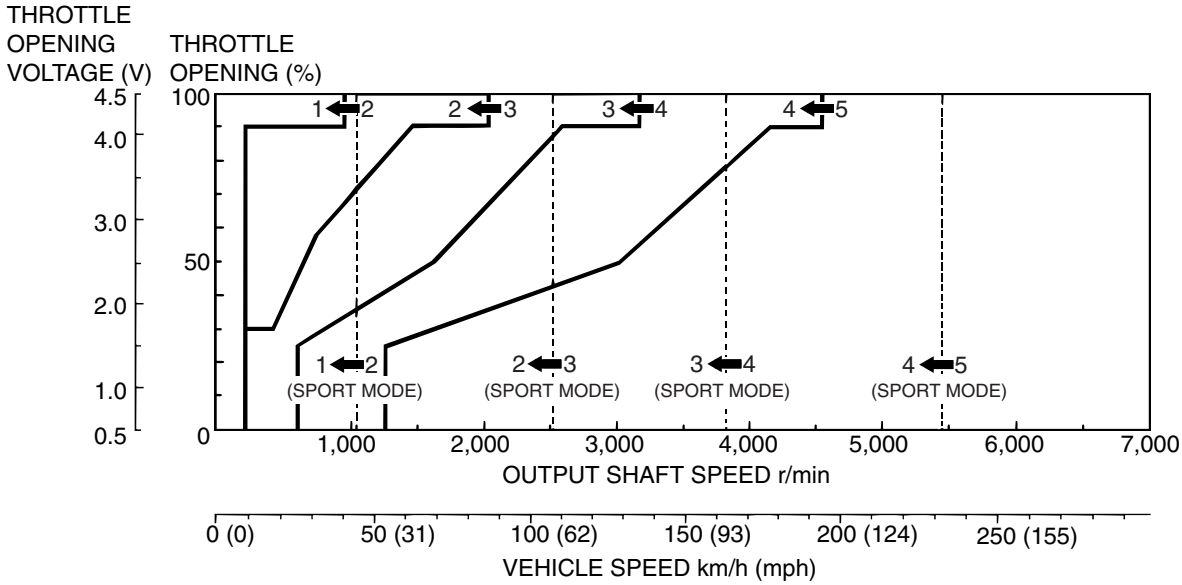

AC500235 AB

TORQE CONVERTER CLUTCH CONTROL

4TH GEAR RANGE <4A/T>

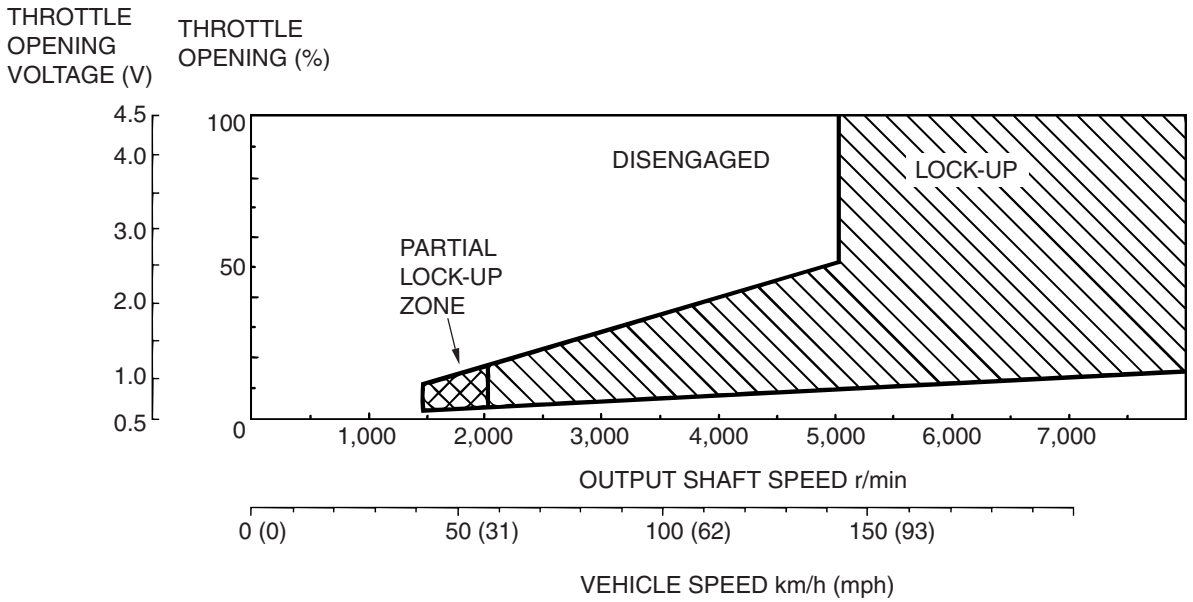

AC407208 AB

3RD GEAR RANGE <4A/T>

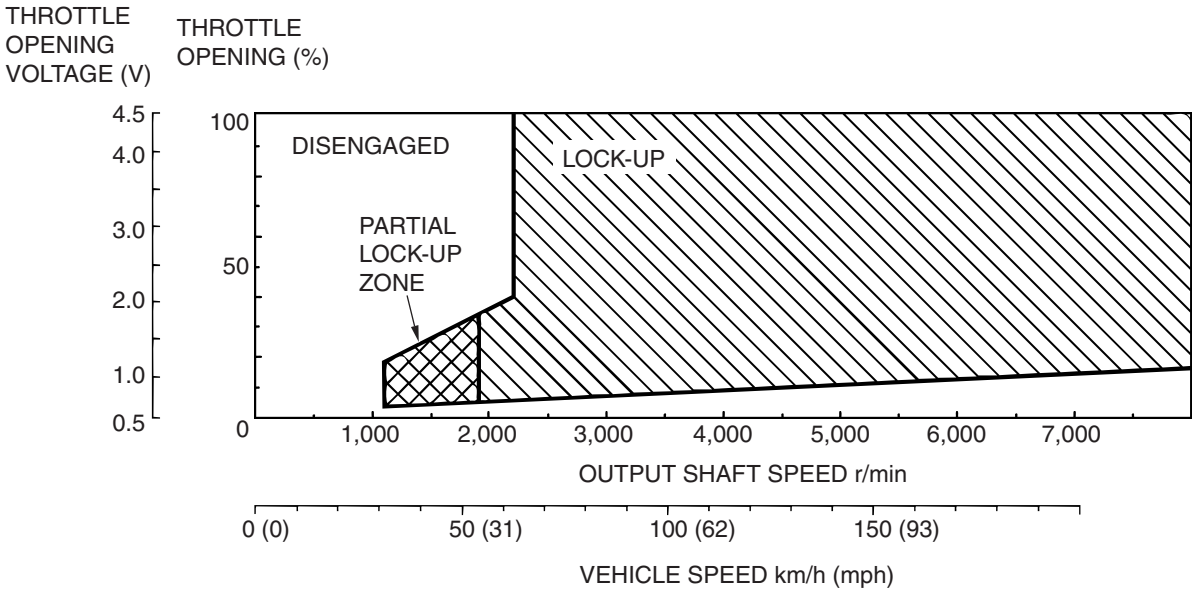

AC407207 AB

5TH GEAR RANGE <5A/T>

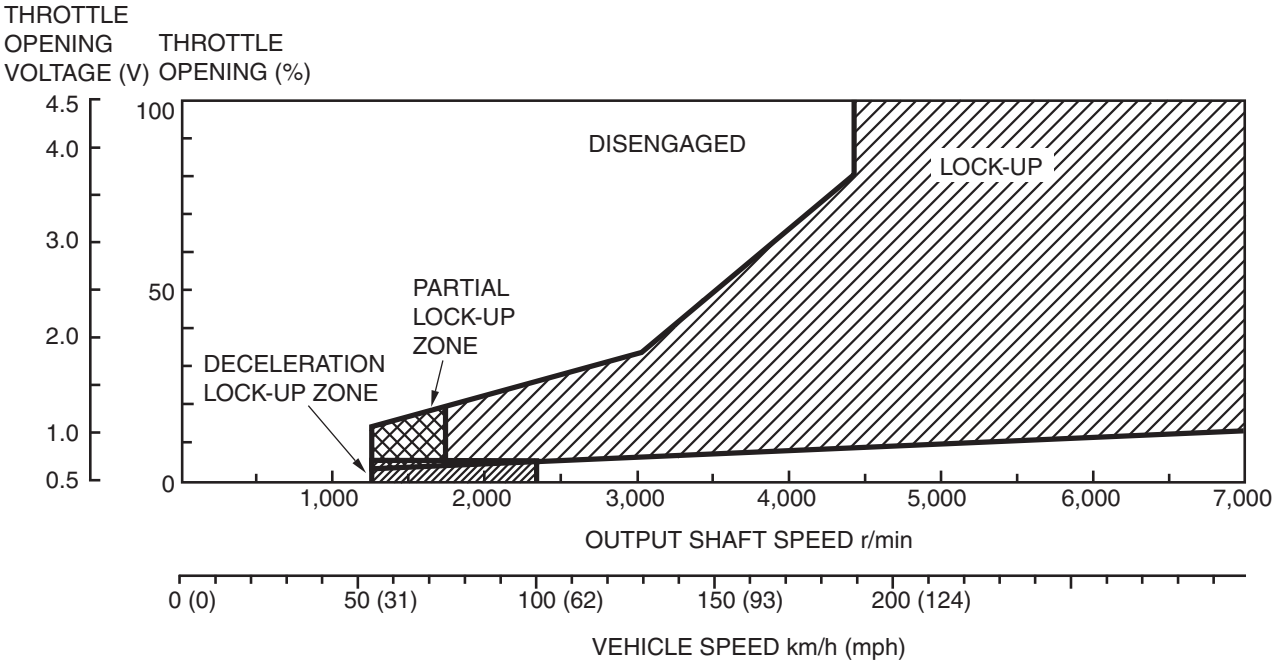

AC406257AB

4TH GEAR RANGE <5A/T>

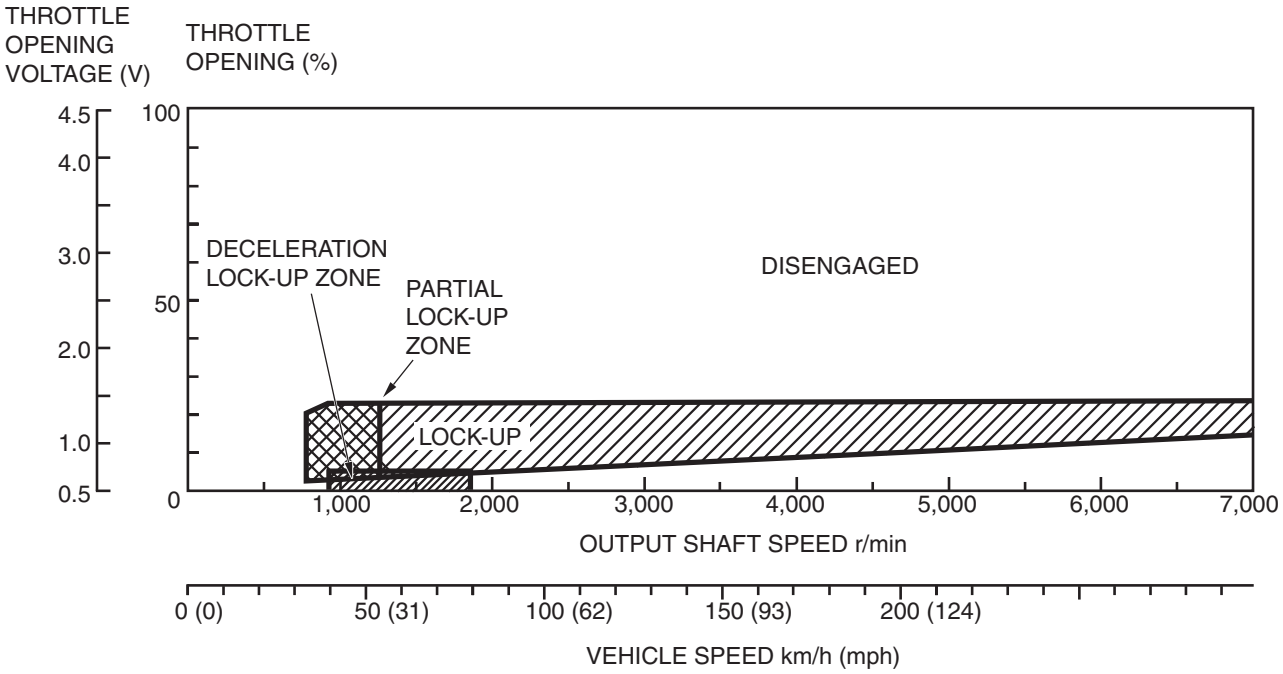

AC406256 AB

AUTOMATIC TRANSAXLE DIAGNOSIS

DIAGNOSTIC TROUBLESHOOTING FLOW

M1231013500557

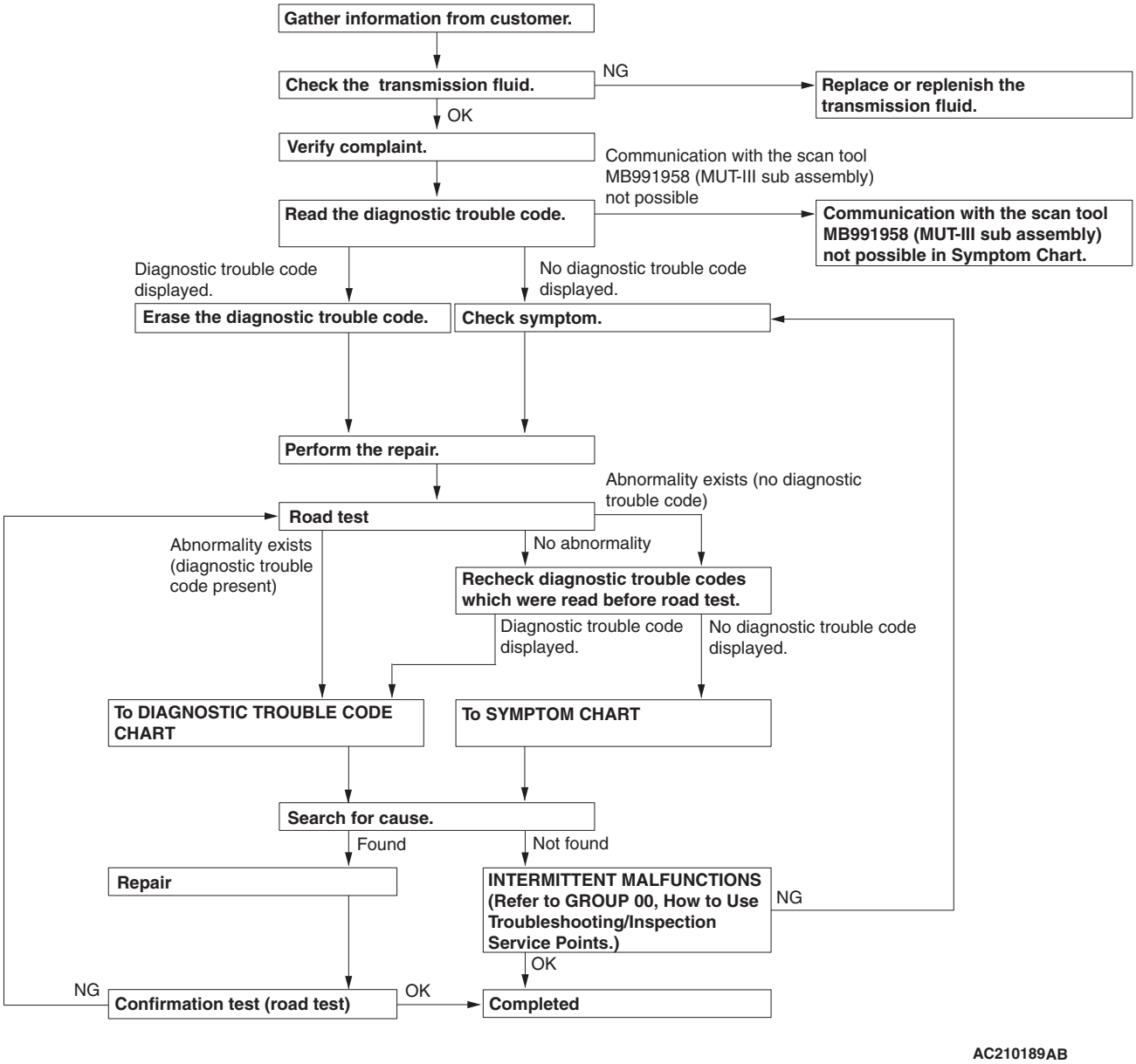

INTRODUCTION TO A/T DIAGNOSIS

M1231012300271

The automatic transaxle can exhibit any of the following symptoms: noise or vibration is generated, Transmission fluid leaks, the vehicle does not move forward or backward. The causes of these symptoms could come from: Incorrect mounting, the Transmission fluid may be low, or a component of the transaxle may be faulty.

The following items are suspected as causes for the INVECS-II troubles: malfunction of the PCM, the sensors, the switches, the harness or connectors.

A/T DIAGNOSTIC TROUBLESHOOTING STRATEGY

M1231007600373

Use these steps to plan your diagnostic strategy. If you follow them carefully, you will find most A/T malfunctions.

1. Gather as much information as possible about the complaint from the customer.
2. Verify that the condition described by the customer exists.
3. Check the vehicle for any A/T Diagnostic Trouble Codes (DTCs).
4. If you can not verify the condition and there are no DTCs, the malfunction is intermittent. For information on how to cope with intermittent malfunctions, refer to GROUP 00, How to Use Troubleshooting/Inspection Service Points – How to Cope with Intermittent Malfunction P.00-14.
5. If you can verify the condition but there are no DTCs, or the system can not communicate with scan tool, refer to the Symptom Chart P.23A-66.
6. If there is a DTC, record the number of the code, then erase the code from memory using scan tool.
7. Reconfirm the symptom with a Road Test.
8. If a DTC is set again, go to the Inspection Chart for Diagnostic Trouble Codes.
9. If a DTC is not set again, the malfunction is intermittent. For information on how to cope with intermittent malfunctions, refer to GROUP 00, How to Use Troubleshooting/Inspection Service Points – How to Cope with Intermittent Malfunction P.00-14.
10. After repairs are completed, conduct a Road Test duplicating the complaint conditions to confirm the malfunction has been eliminated.

DIAGNOSTIC FUNCTION

M1231022500157

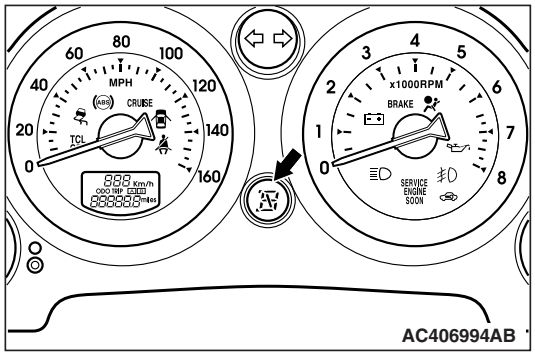

CHECK SELECTOR LEVER POSITION INDICATOR LIGHT

The selector lever position indicator light (D, 1 through 4 or 5) flashes once per second if there is an abnormality in any of the items in the table below which are related to the A/T system. Check for diagnostic trouble codes if the selector lever position indicator light (D, 1 through 4 or 5) is flashing once per second.

Selector lever positioin indicator light (D, 1 through 4 or 5) flashing items

- Input shaft speed sensor
- Output shaft speed sensor
- Each solenoid valve
- Gear incorrect ratio
- A/T control relay system

NOTE: If the selector lever position indicator light (D, 1 through 4 or 5) is flashing twice per second, the transmission fluid temperature is high. [It flushes when the fluid is approximately 125℃ (257℉)or more and goes off when the fluid is approximately 115℃ (239℉)or less]

ON-BOARD DIAGNOSTICS

The powertrain control module (PCM) monitors its input/output signals (some signals all the time and others under specified conditions). When an irregular signal is initially monitored, the PCM decides that a malfunction has occurred and records the occurrence as a diagnostic trouble code. There are 24 diagnostic items. The diagnostic results can be read with scan tool. Diagnostic trouble codes are kept in memory by direct battery feed. The codes are retained in memory even if the ignition switch is in the "LOCK" (OFF) position. DTCs are not erased even after the battery terminals and the PCM connector are disconnected. In addition, the diagnostic trouble code can also be erased by scan tool.

NOTE: If a sensor is disconnected when the ignition switch is in the "ON" position, a diagnostic trouble code is stored in memory. In this case, erase the DTC using scan tool.

The 24 diagnostic items are displayed in numeric order.

HOW TO CONNECT THE SCAN TOOL (M.U.T.-III)

Required Special Tools:

- MB991958: Scan Tool (M.U.T.-III Sub Assembly)
  - MB991824: Vehicle Communication Interface (V.C.I.)
  - MB991827: M.U.T.-III USB Cable
  - MB991910: M.U.T.-III Main Harness A

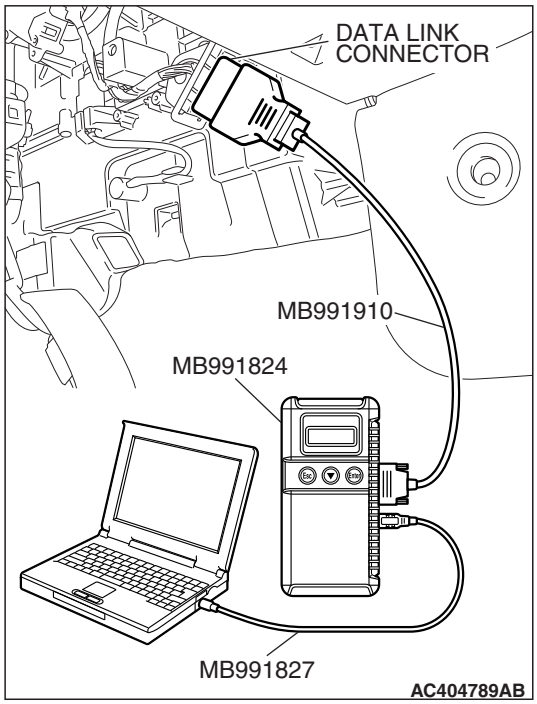

⚠ CAUTION

To prevent damage to scan tool MB991958, always turn the ignition switch to the "LOCK" (OFF) position before connecting or disconnecting scan tool MB991958.

1. Ensure that the ignition switch is at the "LOCK" (OFF) position.
2. Start up the personal computer.
3. Connect special tool MB991827 to special tool MB991824 and the personal computer.
4. Connect special tool MB991910 to special tool MB991824.
5. Connect special tool MB991910 to the data link connector.
6. Turn the power switch of special tool MB991824 to the "ON" position.

   NOTE: When special tool MB991824 is energized, special tool MB991824 indicator light will be illuminated in a green color.
7. Start the M.U.T.-III system on the personal computer.

NOTE: Disconnecting scan tool MB991958 is the reverse of the connecting sequence, making sure that the ignition switch is at the "LOCK" (OFF) position.

HOW TO READ AND ERASE DIAGNOSTIC TROUBLE CODES

Required Special Tools:

- MB991958: Scan Tool (M.U.T.-III Sub Assembly)
  - MB991824: V.C.I.
  - MB991827: M.U.T.-III USB Cable
  - MB991910: M.U.T.-III Main Harness A

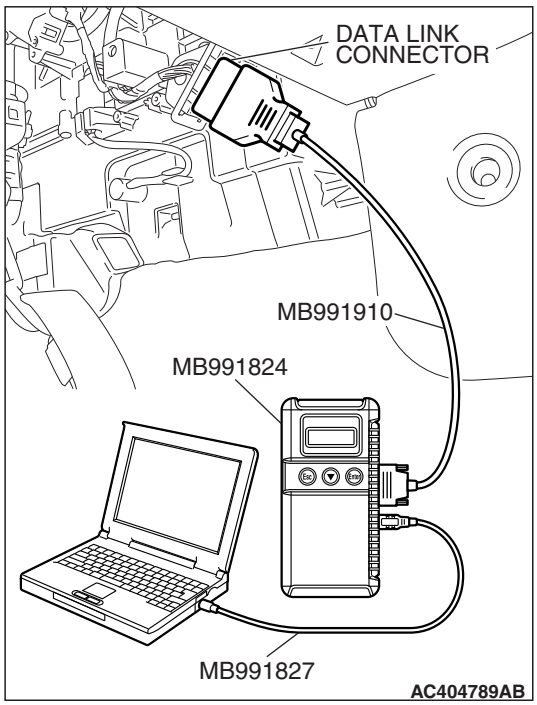

⚠ CAUTION

To prevent damage to scan tool MB991958, always turn the ignition switch to the "LOCK" (OFF) position before connecting or disconnecting scan tool MB991958.

NOTE: If the battery voltage is low, diagnostic trouble codes will not be set. Check the battery if scan tool MB991958 does not display.

1. Connect scan tool MB991958 to the data link connector.
2. Turn the ignition switch to the "ON" position.
3. Select "Interactive Diagnosis" from the start-up screen.
4. Select "System select."
5. Choose "ELC-A/T" from the "POWER TRAIN" tab.
6. Select "MITSUBISHI."
7. Select "Diagnostic Trouble Code."
8. If a DTC is set, it is shown.
9. Choose "Erase DTCs" to erase the DTC.

HOW TO READ DATA LIST

Required Special Tools:

- MB991958 : Scan Tool (M.U.T.-III Sub Assembly)
  - MB991824: V.C.I.
  - MB991827: M.U.T.-III USB Cable
  - MB991910: M.U.T.-III Main Harness A

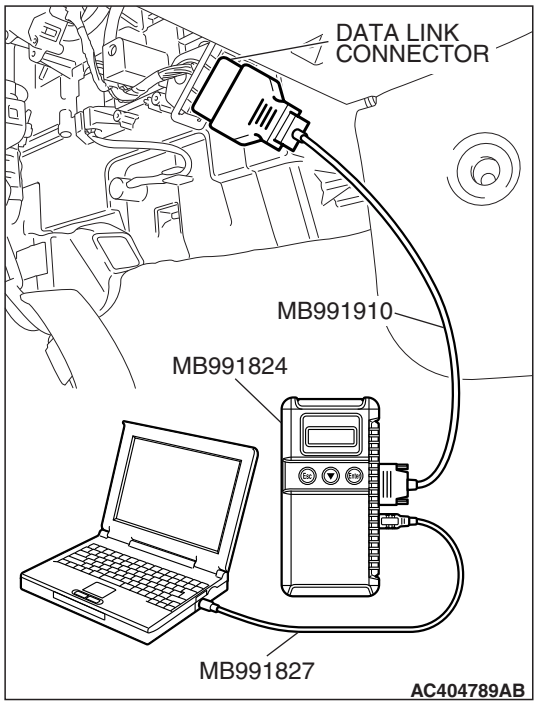

⚠ CAUTION

To prevent damage to scan tool MB991958, always turn the ignition switch to the "LOCK" (OFF) position before connecting or disconnecting scan tool MB991958.

1. Connect scan tool MB991958 to the data link connector.
2. Turn the ignition switch to the "ON" position.
3. Select "Interactive Diagnosis" from the start-up screen.
4. Select "System select."
5. Choose "ELC-A/T" from the "POWER TRAIN" tab.
6. Select "MITSUBISHI."
7. Select "Data List."
8. Choose an appropriate item and select the "OK" button.

HOW TO PERFORM ACTUATOR TEST

Required Special Tools:

- MB991958: Scan Tool (M.U.T.-III Sub Assembly)
  - MB991824: V.C.I.
  - MB991827: M.U.T.-III USB Cable
  - MB991910: M.U.T.-III Main Harness A

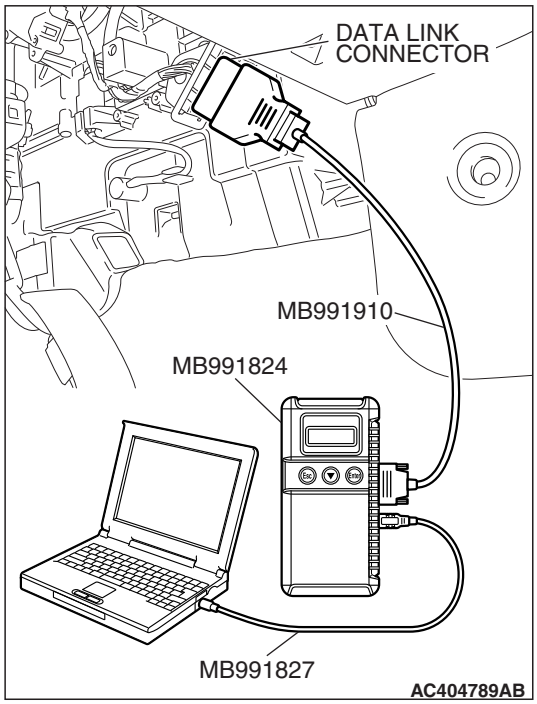

⚠ CAUTION

To prevent damage to scan tool MB991958, always turn the ignition switch to the "LOCK" (OFF) position before connecting or disconnecting scan tool MB991958.

1. Connect scan tool MB991958 to the data link connector.
2. Turn the ignition switch to the "ON" position.
3. Select "Interactive Diagnosis" from the start-up screen.
4. Select "System select."
5. Choose "ELC-A/T" from the "POWER TRAIN" tab.
6. Select "MITSUBISHI."
7. Select "Actuator Test."
8. Choose an appropriate item and select the "OK" button.

HOW TO DIAGNOSE THE CAN BUS LINES

Required Special Tools:

- MB991958: Scan Tool (M.U.T.-III Sub Assembly)
  - MB991824: V.C.I.
  - MB991827: M.U.T.-III USB Cable
  - MB991910: M.U.T.-III Main Harness A

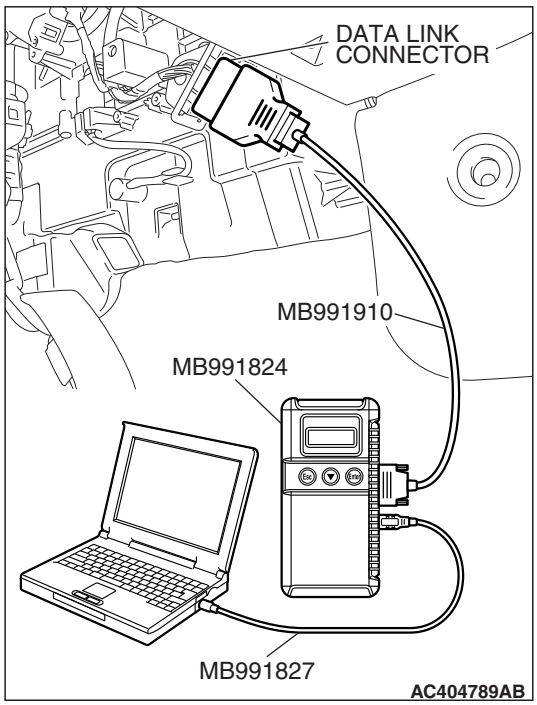

⚠ CAUTION

To prevent damage to scan tool MB991958, always turn the ignition switch to the "LOCK" (OFF) position before connecting or disconnecting scan tool MB991958.

1. Connect scan tool MB991958 to the data link connector.
2. Turn the ignition switch to the "ON" position.
3. Select "CAN bus diagnosis" from the start-up screen.
4. When the vehicle information is displayed, confirm that it matches the vehicle whose CAN bus lines will be diagnosed.
   - If they match, go to step 8.
   - If not, go to step 5.
5. Select the "view vehicle information" button.
6. Enter the vehicle information and select the "OK" button.
7. When the vehicle information is displayed, confirm again that it matches the vehicle whose CAN bus lines will be diagnosed.
   - If they match, go to step 8.
   - If not, go to step 5.
8. Select the "OK" button.
9. When the optional equipment screen is displayed, choose the one which the vehicle is fitted with, and then select the "OK" button.

HOW TO INITIALIZE A/T LEARNED VALUE

M1231022600143

AIM

A/T learned value must be reset whenever the automatic transaxle, engine assembly, A/T valve body, or A/T solenoid valve is replaced. It cannot be reset by disconnecting the battery. Use the M.U.T.-III as follows:

INITIALIZATION PROCEDURE

1. Shift the selector lever to P and turn the ignition switch to the "LOCK" (OFF) position.
2. Connect the M.U.T.-III to the vehicle's data link connector.
3. In the ELC-A/T menu screen, select "Special Function," then select "Memory Reset."
4. Select "OK" to reset the A/T learned memory.
5. After this initialization, make the system learn the idling in accordance with "Learning procedure for idling in MFI engine" (Refer to GROUP 00 – Precautions before Service P.00-31).

NOTE: This reset procedure will also automatically initialize the INVECS-II Learned Value. A/T DTCs and A/T freeze-frame data will be erased. (Engine DTCs, engine-related freeze-frame data, and Readiness status will remain even after A/T Learned Value is reset.)

FAIL-SAFE/BACKUP FUNCTION

M1231008300289

When a malfunction of a main sensor or actuator is detected by the PCM, the transaxle is controlled by pre-set control logic to maintain safe conditions for driving.

The following table shows how the fail-safe/backup function affects vehicle driveability and operation.

MALFUNCTIONING ITEM		JUDGEMENT CONDITION	CONTROL DEFAULT DURING MALFUNCTION
Input shaft speed sensor		If no output pulse from the input shaft speed sensor is detected for one second or more when the vehicle speed is 30 km/h (19 mph) or greater.	The diagnostic trouble code is recorded when the malfunction occurs during 4 monitoring periods in one drive cycle. When the judgment condition is met, the transaxle holds 3rd gear or 2nd gear, depending on speed, as a fail-safe.
Output shaft speed sensor		The output signal from the output shaft speed sensor is not present for one second or more while the vehicle is driven.	The diagnostic trouble code is recorded when the malfunction occurs during 4 monitoring periods in one drive cycle. When the judgment condition is met, the transaxle holds 3rd gear or 2nd gear, depending on speed, as a fail-safe.
Low-reverse solenoid valve		Solenoid valve resistance is below 2.7 ohms for 0.32 seconds.	The diagnostic trouble code is recorded when the malfunction occurs during 4 monitoring periods in one drive cycle. When the judgment condition is met, the A/T control relay is turned off. The transaxle will only operate in 3rd and reverse gears until the system is repaired.
Underdrive solenoid valve			
Second solenoid valve			
Overdrive solenoid valve			
Reduction solenoid valve <5A/T>			
Torque converter clutch solenoid valve			
Incomplete shifting	1st	The gear ratio value from the output shaft speed sensor is not the same as the output from the input shaft speed sensor for one second after shifting has been completed.	The diagnostic trouble code is recorded when the malfunction occurs during 4 monitoring periods in one drive cycle. When the judgment condition is met, the A/T control relay is turned off. The transaxle will only operate in 3rd and reverse gears until the system is repaired.
	2nd		
	3rd		
	4th		
	5th <5A/T>		
	Reverse		
A/T control relay		A/T control relay voltage is less than seven volts for 0.1 second after the ignition switch is turned "ON".	The A/T control relay is switched off. The transaxle will only operate in 3rd and reverse gears until the system is repaired.
Malfunction in the PCM		Malfunction has occurred in the PCM.	The A/T control relay is switched off. The transaxle will only operate in 3rd and reverse gears until the system is repaired.

ROAD TEST

M1231007800957

Check using the following procedures.

STEP	CONDITION BEFORE TEST/OPERATION	TEST/OPERATION	STANDARD	INSPECTION ITEM	DTC	INSPECTION PROCEDURE PAGE
1	Ignition switch: (LOCK) OFF	Ignition switch (1) ON	Data list No.8 (1) Control Relay Voltage [V]	A/T Control relay output voltage	P1788	A/T Control relay system (P.23A-286).
2	Ignition switch: ON Engine: Stopped Transmission range: P	Transmission range (1) P, (2) R, (3) N, (4) D	Data list No.34 (1) P, (2) R, (3) N, (4) D	Transmission range switch	P1770, P1771	Transmission range switch system (P.23A-143, P.23A-172).
		Transmission range (1) D (1st gear) (2) Select the sport mode (1st gear) (3) Upshift and hold the selector lever in that position (2nd gear) (4) Downshift and hold the selector lever in that position (1st gear)	Data list No.27 (1) OFF, (2) ON, (3) ON, (4) ON Data list No.28 (1) OFF, (2) OFF, (3) ON, (4) OFF Data list No.29 (1) OFF, (2) OFF, (3) OFF, (4) ON	Select switch and Shift switch	-	Shift switch assembly system (P.23A-338).
			Selector lever position indicator light (1) "D" illuminates (2) Only "1" illuminates (3) Only "2" illuminates (4) Only "1" illuminates			

STEP	CONDITION BEFORE TEST/OPERATION	TEST/OPERATION	STANDARD	INSPECTION ITEM	DTC	INSPECTION PROCEDURE PAGE
2	Ignition switch: ON Engine: Stopped Transmission range: P	Accelerator pedal (1) Fully closed (2) Depressed (3) Fully open	Data list No.2 (1) 300 – 700 mV (2) Gradually rises from (1) (3) 4,000 mV or more	TP sensor	-	Group 13A <2.4L Engine>, Diagnostic Trouble Code Procedures – DTCs P0122, 0123: Throttle Position Sensor System (P.13A-267, P.13A-278). Group 13B <3.8L Engine>, Diagnostic Trouble Code Procedures – DTCs P0122, 0123: Throttle Position Sensor System (P.13B-271, P.13B-282).
		Brake pedal (1) Depressed (2) Released	Data list No.19 (1) ON (2) OFF	Stoplight switch	P1769	Stoplight switch system (P.23A-134).
3	Ignition switch: ST Engine: Stopped	Cranking test with lever in P or N range	Cranking should be possible	Cranking	-	Engine does not crank (P.23A-301).
4	Engine warming up	Drive for 15 minutes or more so that the transmission fluid temperature becomes 70 – 80°C (158 – 176°F)	Data list No.7 Gradually rises to 70 – 80°C (158 – 176°F)	Transmission fluid temperature sensor	P1763, P1764	Transmission fluid temperature sensor system (P.23A-68, P.23A-82).
5	Engine: Idling Transmission range: N	Brake pedal (Retest) (1) Depressed (2) Released	Data list No.19 (1) ON (2) OFF	Stoplight switch	P1769	Stoplight switch system (P.23A-134).

STEP	CONDITION BEFORE TEST/OPERATION	TEST/OPERATION	STANDARD	INSPECTION ITEM	DTC	INSPECTION PROCEDURE PAGE
5	Engine: Idling Transmission range: N	Accelerator pedal (1) Fully closed (2) Depressed	Data list No.1 (1) Engine tachometer and the scan tool MB991958 (M.U.T.-III sub assembly) shows the same engine speed (2) Gradually rises from (1)	Crankshaft position sensor	-	Group 13A <2.4L Engine>, Diagnostic Trouble Code Procedures – DTC P0335: Crank shaft Position Sensor System (P.13A-580). Group 13B <3.8L Engine>, Diagnostic Trouble Code Procedures – DTC P0335: Crank shaft Position Sensor System (P.13B-617).
		Transmission range (1) N → D (2) N → R	Should be no abnormal shift shocks Time delay when engaging should be within 2 seconds	Malfunction when starting	-	Engine stalls when moving selector lever from N to D or N to R (P.23A-311).
					-	Shift shock when shifting from N to D and long delay (P.23A-312).
					-	Shift shock when shifting from N to R and long delay (P.23A-316).
					-	Shift shock when shifting from N to D, N to R and long delay (P.23A-319).

STEP	CONDITION BEFORE TEST/OPERATION	TEST/OPERATION	STANDARD	INSPECTION ITEM	DTC	INSPECTION PROCEDURE PAGE
5	Engine: Idling Transmission range: N	Transmission range (1) N → D (2) N → R	Should be no abnormal shift shocks Time delay when engaging should be within 2 seconds	Does not move	-	Does not move forward (P.23A-304).
					-	Does not move backward (P.23A-307).
					-	Does not move (forward or backward) (P.23A-309).
6 <4A/T>	Transmission range: Sport mode (on a flat and straight road)	Gear range and vehicle speed (Each condition should be maintained for 10 seconds or more). (1) Idling in 1st gear (Vehicle stopped) (2) Driving at constant speed of 10 km/h (6.2 mph) in 1st gear (3) Driving at constant speed of 30 km/h (19 mph) in 2nd gear (4) Driving at constant speed of 50 km/h (31 mph) in 3rd gear (5) Driving at constant speed of 60 km/h (37 mph) in 4th gear	Data list No.11 (2) 1st, (3) 2nd, (4) 3rd, (5) 4th	Shift position	-	-
			Data list No.17 (2) 0%, (3) 100%, (4) 100%, (5) 100%	Low-reverse solenoid valve duty %	P1773	Low-reverse solenoid valve system (P.23A-187).
			Data list No.12 (2) 0%, (3) 0%, (4) 0%, (5) 100%	Underdrive solenoid valve duty %	P1774	Underdrive solenoid valve system (P.23A-201).

STEP	CONDITION BEFORE TEST/OPERATION	TEST/OPERATION	STANDARD	INSPECTION ITEM	DTC	INSPECTION PROCEDURE PAGE
6 <4A/T>	Transmission range: Sport mode (on a flat and straight road)	Gear range and vehicle speed (Each condition should be maintained for 10 seconds or more). (1) Idling in 1st gear (Vehicle stopped) (2) Driving at constant speed of 10 km/h (6.2 mph) in 1st gear (3) Driving at constant speed of 30 km/h (19 mph) in 2nd gear (4) Driving at constant speed of 50 km/h (31 mph) in 3rd gear (5) Driving at constant speed of 60 km/h (37 mph) in 4th gear	Data list No.14 (2)100%, (3) 0%, (4) 100%, (5) 0%	Second solenoid valve duty %	P1775	Second solenoid valve system (P.23A-213).
			Data list No.15 (2) 100%, (3) 100%, (4) 0%, (5) 0%	Overdrive solenoid valve duty %	P1776	Overdrive solenoid valve system (P.23A-225).
			Data list No.5 (4) 1,500 – 1,800 r/min	Input shaft speed sensor	P1766	Input shaft speed sensor system (P.23A-92).
			Data list No.6 (4) 1,500 – 1,800 r/min	Output shaft speed sensor	P1767	Output shaft speed sensor system (P.23A-113).

STEP	CONDITION BEFORE TEST/OPERATION	TEST/OPERATION	STANDARD	INSPECTION ITEM	DTC	INSPECTION PROCEDURE PAGE
6 <5A/T>	Transmission range: Sport mode (on a flat and straight road)	Transmission range and vehicle speed (Each condition should be maintained for 10 seconds or more). (1) Idling in 1st gear (Vehicle stopped) (2) Driving at constant speed of 10 km/h (6.2 mph) in 1st gear (3) Driving at constant speed of 30 km/h (19 mph) in 2nd gear (4) Driving at constant speed of 50 km/h (31 mph) in 3rd gear (5) Driving at constant speed of 60 km/h (37 mph) in 4th gear (6) Driving at constant speed of 70 km/h (43 mph) in 5th gear	Data list No.11 (2) 1st, (3) 2nd, (4) 3rd, (5) 4th, (6) 5th	Shift position	-	-
			Data list No.12 (2) 0%, (3) 100%, (4) 100%, (5) 0%, (6) 0%	Low-reverse solenoid valve duty %	P1773	Low-reverse solenoid valve system (P.23A-187).
			Data list No.13 (2) 0%, (3) 0%, (4) 0%, (5) 0%, (6) 100%	Underdrive solenoid valve duty %	P1774	Underdrive solenoid valve system (P.23A-201).
			Data list No.14 (2)100%, (3) 0%, (4) 100%, (5) 100%, (6) 0%	Second solenoid valve duty %	P1775	Second solenoid valve system (P.23A-213).
			Data list No.15 (2) 100%, (3) 100%, (4) 0%, (5) 0%, (6) 0%	Overdrive solenoid valve duty %	P1776	Overdrive solenoid valve system (P.23A-225).

STEP	CONDITION BEFORE TEST/OPERATION	TEST/OPERATION	STANDARD	INSPECTION ITEM	DTC	INSPECTION PROCEDURE PAGE
6 <5A/T>	Transmission range: Sport mode (on a flat and straight road)	Transmission range and vehicle speed (Each condition should be maintained for 10 seconds or more). (1) Idling in 1st gear (Vehicle stopped) (2) Driving at constant speed of 10 km/h (6.2 mph) in 1st gear (3) Driving at constant speed of 30 km/h (19 mph) in 2nd gear (4) Driving at constant speed of 50 km/h (31 mph) in 3rd gear (5) Driving at constant speed of 60 km/h (37 mph) in 4th gear (6) Driving at constant speed of 70 km/h (43 mph) in 5th gear	Data list No.16 (2) 0%, (3) 0%, (4) 0%, (5)100%, (6)100%	Reduction solenoid valve duty%	P1777	Reduction solenoid valve system (P.23A-237).
			Data list No.5 (5) 1,400 – 1,700 r/min	Input shaft speed sensor	P1766	Input shaft speed sensor system (P.23A-92).
			Data list No.6 (5) 1,400 – 1,700 r/min	Output shaft speed sensor	P1767	Output shaft speed sensor system (P.23A-113).
7 <4A/T>	Transmission range: Sport mode (on a flat and straight road)	Transmission range and vehicle speed (1) Driving at speed of 60 km/h (37 mph) in 3rd gear (2) Driving at constant speed of 60 km/h (37 mph) (3) Release accelerator pedal (Speed under 50 km/h (31 mph)	Data list No.17 (2) 70 – 99.6% (3) 70 – 99.6% to 0%	Torque converter clutch solenoid valve duty %	P1778, P1786, P1787	Torque converter clutch solenoid system (P.23A-249, P.23A-277, P.23A-282).
			Data list No.10 (2) –10 to 10 r/min (3) The value changes from (2)	Torque converter clutch amount of slippage		

STEP	CONDITION BEFORE TEST/OPERATION	TEST/OPERATION	STANDARD	INSPECTION ITEM	DTC	INSPECTION PROCEDURE PAGE
7 <5A/T>	Transmission range: Sport mode (on a flat and straight road)	Transmission range and vehicle speed (1) Driving at speed of 50 km/h (31 mph) in 4th gear (2) Driving at constant speed of 50 km/h (31 mph) (3) Release accelerator pedal (Speed under 50 km/h (31 mph)	Data list No.17 (2) 70 – 99.6% (3) 70 – 99.6% to 0%	Torque converter clutch solenoid valve duty %	P1778, P1786, P1787	Torque converter clutch solenoid system (P.23A-249, P.23A-277, P.23A-282).
			Data list No.10 (2) –10 to 10 r/min (3) The value changes from (2)	Torque converter clutch amount of slippage		
8 <4A/T>	Use the scan tool MB991958 (M.U.T.-III sub assembly) to stop the INVECS-II function Transmission range: D (on a flat and straight road)	(1)Accelerate to 4th gear at a throttle position sensor output of 1.5 V (accelerator opening angle of 25%) (2)Slowly decelerate to a stop (3)Accelerate to 4th gear at a throttle position sensor output of 2.5 V (accelerator opening angle of 50%)	Data list No.2, 6 The shifting points correspond with the scan tool display and the TP sensor voltage (opening angle) and output shaft speed, which are shown in the standard shift pattern	Malfunction when shifting	-	Shift shock and slipping (P.23A-320).
				Does not shift according to instructions	-	Early or late shifting in all gears (P.23A-323).
					-	Early or late shifting in some gears (P.23A-327).
				Does not shift	-	No diagnostic trouble code (P.23A-328).
					P1766	Input shaft speed sensor system (P.23A-92).
					P1767	Output shaft speed sensor system (P.23A-113).

STEP	CONDITION BEFORE TEST/OPERATION	TEST/OPERATION	STANDARD	INSPECTION ITEM	DTC	INSPECTION PROCEDURE PAGE
8 <4A/T>	Use the scan tool MB991958 (M.U.T.-III sub assembly) to stop the INVECS-II function Transmission range: D (on a flat and straight road)	(1) Accelerate from 1st gear to 4th gear. (2) While driving at 60 km/h (37 mph) in 4th gear, downshift to 3rd gear (3) While driving at 40 km/h (25 mph) in 3rd gear, downshift to 2nd gear (4) While driving at 20 km/h (12 mph) in 2nd gear, downshift to 1st gear	Data list No.11 (1) 1st → 2nd → 3rd → 4th (2) 4th → 3rd (3) 3rd → 2nd (4) 2nd → 1st	Does not shift from 1 to 2 or 2 to 1	P1773	Low-reverse solenoid valve system (P.23A-187).
					P1775	Second solenoid valve system (P.23A-213).
					P1779	1st gear incorrect ratio (P.23A-260).
					P1780	2nd gear incorrect ratio (P.23A-260).
				Does not shift from 2 to 3 or 3 to 2	P1775	Second solenoid valve system (P.23A-213).
					P1776	Overdrive solenoid valve system (P.23A-225).
					P1780	2nd gear incorrect ratio (P.23A-260).
					P1781	3rd gear incorrect ratio (P.23A-260).

STEP	CONDITION BEFORE TEST/OPERATION	TEST/OPERATION	STANDARD	INSPECTION ITEM	DTC	INSPECTION PROCEDURE PAGE
8 <4A/T>	Use the scan tool MB991958 (M.U.T.-III sub assembly) to stop the INVECS-II function Transmission range: D (on a flat and straight road)	(1) Accelerate from 1st gear to 4th gear. (2) While driving at 60 km/h (37 mph) in 4th gear, downshift to 3rd gear (3) While driving at 40 km/h (25 mph) in 3rd gear, downshift to 2nd gear (4) While driving at 20 km/h (12 mph) in 2nd gear, downshift to 1st gear	Data list No.11 (1) 1st → 2nd → 3rd → 4th (2) 4th → 3rd (3) 3rd → 2nd (4) 2nd → 1st	Does not shift from 3 to 4 or 4 to 3	P1774	Underdrive solenoid valve system (P.23A-201).
					P1775	Second solenoid valve system (P.23A-213).
					P1781	3rd gear incorrect ratio (P.23A-260).
					P1782	4th gear incorrect ratio (P.23A-260).
8 <5A/T>	Use the scan tool MB991958 (M.U.T.-III sub assembly) to stop the INVECS-II function Transmission range: D (on a flat and straight road)	(1)Accelerate to 5th gear at a throttle position sensor output of 1.5 V (accelerator opening angle of 25%) (2)Slowly decelerate to a stop (3)Accelerate to 5th gear at a throttle position sensor output of 2.5 V (accelerator opening angle of 50%)	Data list No.2, 6 The shifting points correspond with the scan tool display and the TP sensor voltage (opening angle) and output shaft speed, which are shown in the standard shift pattern	Malfunction when shifting	-	Shift shock and slipping (P.23A-320).
				Does not shift according to instructions	-	Early or late shifting in all gears (P.23A-323).
					-	Early or late shifting in some gears (P.23A-327).

STEP	CONDITION BEFORE TEST/OPERATION	TEST/OPERATION	STANDARD	INSPECTION ITEM	DTC	INSPECTION PROCEDURE PAGE
8 <5A/T>	Use the scan tool MB991958 (M.U.T.-III sub assembly) to stop the INVECS-II function Transmission range: D (on a flat and straight road)	(1)Accelerate to 5th gear at a throttle position sensor output of 1.5 V (accelerator opening angle of 25%) (2)Slowly decelerate to a stop (3)Accelerate to 5th gear at a throttle position sensor output of 2.5 V (accelerator opening angle of 50%)	Data list No.2, 6 The shifting points correspond with the scan tool display and the TP sensor voltage (opening angle) and output shaft speed, which are shown in the standard shift pattern	Does not shift	-	No diagnostic trouble code (P.23A-328).
					P1766	Input shaft speed sensor system (P.23A-92).
					P1767	Output shaft speed sensor system (P.23A-113).

STEP	CONDITION BEFORE TEST/OPERATION	TEST/OPERATION	STANDARD	INSPECTION ITEM	DTC	INSPECTION PROCEDURE PAGE
8 <5A/T>	Use the scan tool MB991958 (M.U.T.-III sub assembly) to stop the INVECS-II function Transmission range: D (on a flat and straight road)	(1) Accelerate from 1st gear to 5th gear. (2) While driving at 70 km/h (43 mph) in 5th gear, downshift to 4th gear (3) While driving at 60 km/h (37 mph) in 4th gear, downshift to 3rd gear (4) While driving at 40 km/h (25 mph) in 3rd gear, downshift to 2nd gear (5) While driving at 20 km/h (12 mph) in 2nd gear, downshift to 1st gear	Data list No.11 (1) 1st → 2nd → 3rd → 4th → 5th (2) 5th → 4th (3) 4th → 3rd (4) 3rd → 2nd (5) 2nd → 1st	Does not shift from 1 to 2 or 2 to 1	P1773	Low-reverse solenoid valve system (P.23A-187).
					P1775	Second solenoid valve system (P.23A-213).
					P1779	1st gear incorrect ratio (P.23A-260).
					P1780	2nd gear incorrect ratio (P.23A-260).
				Does not shift from 2 to 3 or 3 to 2	P1775	Second solenoid valve system (P.23A-213).
					P1776	Overdrive solenoid valve system (P.23A-225).
					P1780	2nd gear incorrect ratio (P.23A-260).
					P1781	3rd gear incorrect ratio (P.23A-260).

STEP	CONDITION BEFORE TEST/OPERATION	TEST/OPERATION	STANDARD	INSPECTION ITEM	DTC	INSPECTION PROCEDURE PAGE
8 <5A/T>	Use the scan tool MB991958 (M.U.T.-III sub assembly) to stop the INVECS-II function Transmission range: D (on a flat and straight road)	(1) Accelerate from 1st gear to 5th gear. (2) While driving at 70 km/h (43 mph) in 5th gear, downshift to 4th gear (3) While driving at 60 km/h (37 mph) in 4th gear, downshift to 3rd gear (4) While driving at 40 km/h (25 mph) in 3rd gear, downshift to 2nd gear (5) While driving at 20 km/h (12 mph) in 2nd gear, downshift to 1st gear	Data list No.11 (1) 1st → 2nd → 3rd → 4th → 5th (2) 5th → 4th (3) 4th → 3rd (4) 3rd → 2nd (5) 2nd → 1st	Does not shift from 3 to 4 or 4 to 3	P1773	Low-reverse solenoid valve system (P.23A-187).
					P1777	Reduction solenoid valve system (P.23A-237).
					P1781	3rd gear incorrect ratio (P.23A-260).
					P1782	4th gear incorrect ratio (P.23A-260).
				Does not shift from 4 to 5 or 5 to 4	P1774	Underdrive solenoid valve system (P.23A-201).
					P1775	Second solenoid valve system (P.23A-213).
					P1782	4th gear incorrect ratio (P.23A-260).
					P1783	5th gear incorrect ratio (P.23A-260).

STEP	CONDITION BEFORE TEST/OPERATION	TEST/OPERATION	STANDARD	INSPECTION ITEM	DTC	INSPECTION PROCEDURE PAGE
9	Transmission range: N (on a flat and straight road)	Monitor data list No.5 and No.6 with the scan tool MB991958 (M.U.T.-III sub assembly) (1) Move selector lever to R range, drive at constant speed of 10 km/h (6.2 mph)	The ratio between data list No.5 and No.6 should be the same as the gear ratio when reversing.	Does not match	P1766	Input shaft speed sensor system (P.23A-92).
					P1767	Output shaft speed sensor system (P.23A-113).
					P1784	Reverse gear incorrect ratio (P.23A-260).

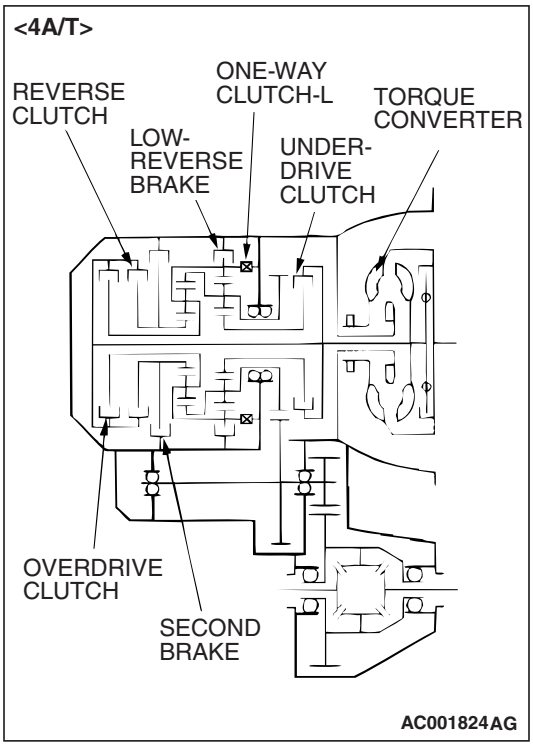

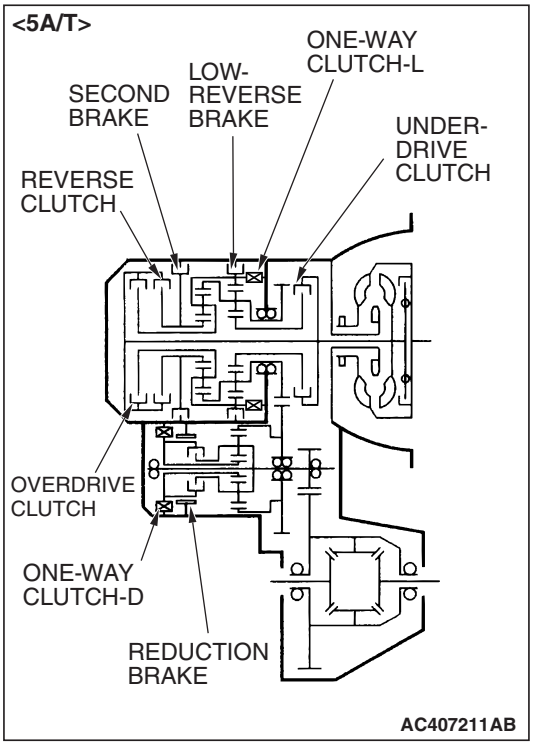

TORQUE CONVERTER STALL TEST

M1231005400470

This test measures the maximum engine speed when the selector lever is in the "D" or "R" position and the torque converter stalls. This tests the operation of the torque converter, stator and one-way clutch operation, as well as the holding performance of the clutches and brakes in the transaxle.

⚠ WARNING

Do not let anyone stand in front of or behind the vehicle while this test is performed.

1. Check the transmission fluid level and temperature. Check the engine coolant temperature.
   - Transmission fluid level: At the "HOT" mark on the dipstick
   - Transmission fluid temperature: 70 – 80°C (158 – 176°F)
   - Engine coolant temperature: 80 – 100°C (176 – 212°F)

   NOTE: Measure transmission fluid temperature with scan tool MB991958 (M.U.T.-III sub assembly).
2. Chock both rear wheels.
3. Connect a tachometer.
4. Apply the parking and service brakes fully.
5. Start the engine.

⚠ CAUTION

- **The throttle should not be fully open for more than five seconds.**
- **If you repeat the stall test when the transmission fluid temperature is greater than 80°C (176°F), move the selector lever to the "N" position and let the engine run at approximately 1,000 r/min for at least one minute. Wait until the transmission fluid temperature returns to 80°C (176°F) or less.**

6. Move the selector lever to the "D" position. Fully depress the accelerator pedal and read the maximum engine speed.

   Standard value: Stall speed: 2,500 – 3,000 r/min <4A/T>
   Standard value: Stall speed: 2,200 – 2,700 r/min <5A/T>
7. Move the selector lever to the "R" position. Fully depress the accelerator pedal and read the maximum engine speed.

   Standard value: Stall speed: 2,500 – 3,000 r/min <4A/T>
   Standard value: Stall speed: 2,200 – 2,700 r/min <5A/T>

TORQUE CONVERTER STALL TEST JUDGMENT RESULTS

1. Stall speed is too high in both "D" and "R" range
   - Malfunction of the torque converter (Slippage on the splines of the torque converter and the input shaft)
   - Low line pressure
   - Low-reverse brake slippage and malfunction of the one-way clutch
2. Stall speed is too high in "D" range only
   - Underdrive clutch slippage
3. Stall speed is too high in "R" range only
   - Reverse clutch slippage
4. Stall speed is too low in both "D" and "R" ranges
   - Malfunction of the torque converter (Slippage of the one-way clutch)
   - Insufficient engine output

HYDRAULIC PRESSURE TESTS

M1231005500518

⚠ CAUTION

The transmission fluid temperature should be between 70 – 80°C (158 – 176°F) during the test.

1. Check the transmission fluid level and temperature. Check engine coolant temperature.
   - Transmission fluid level: "HOT" mark on the dipstick
   - Transmission fluid temperature: 70 – 80°C (158 – 176°F)
   - Engine coolant temperature: 80 – 100°C (176 – 212°F)
2. Raise the vehicle so that the wheels are free to turn.

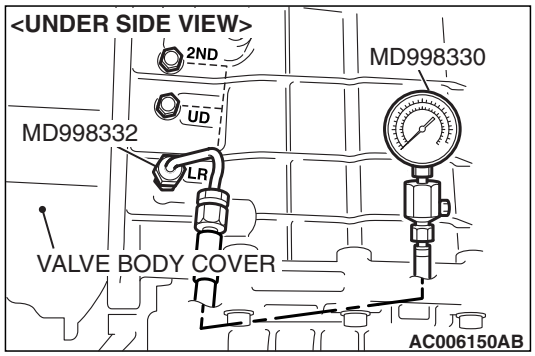

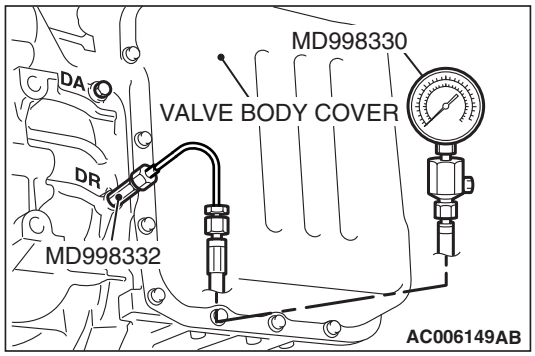

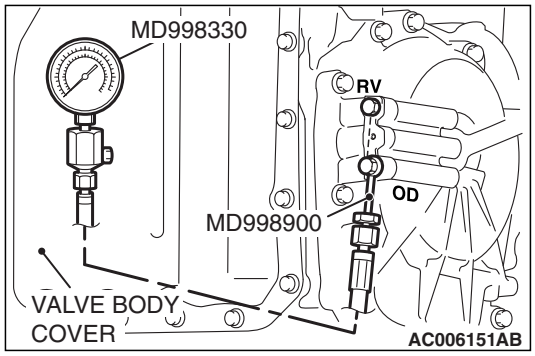

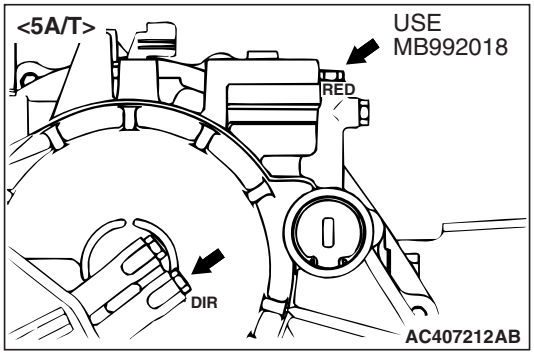

3. Connect the special tools (3.0 MPa (427 psi) oil pressure gauge [MD998330] and adapters [MD998332, MD998900, MB992018 <5A/T>]) to each pressure discharge port.

   NOTE:
   - *2ND: Second brake pressure port*
   - *UD: Underdrive clutch pressure port*
   - *LR: Low-reverse brake pressure port*
   - *DR: Torque converter release pressure port*
   - *DA: Torque converter apply pressure port*
   - *RV: Reverse clutch pressure port*
   - *OD: Overdrive clutch pressure port*
   - *DIR: Direct clutch pressure port <5A/T>*
   - *RED: Reduction brake pressure port <5A/T>*
4. Restart the engine.
5. Check that there are no leaks around the special tool port adapters.
6. Measure the hydraulic pressure at each port under the conditions given in the standard hydraulic pressure table, and check that the measured values are within the standard value ranges.
7. If the pressure is not within the standard value, stop the engine and refer to the hydraulic pressure test diagnosis table.
8. Remove the O-ring from the port plug and replace it.
9. Remove the special tool, and install the plugs to the hydraulic pressure ports.
10. Start the engine and check that there are no leaks around the plugs.

STANDARD HYDRAULIC PRESSURE TABLE

<4A/T>

MEASUREMENT CONDITION			STANDARD HYDRAULIC PRESSURE MPa (psi)					
TRANS-MISSION RANGE	SHIFT POSITION	ENGINE SPEED (r/min)	UNDER-DRIVE CLUTCH PRESSURE [UD]	REVERSE CLUTCH PRESSURE [RV]	OVERDRIVE CLUTCH PRESSURE [OD]	LOW-REVERSE BRAKE PRESSURE [LR]	SECOND BRAKE PRESSURE [2ND]	TORQUE CONVERTER PRESSURE [DR]
P	–	2,500	–	–	–	0.31 – 0.39 (44 – 56)	–	0.22 – 0.36 (32 – 52)
R	Reverse	2,500	–	1.27 – 1.77 (185 – 256)	–	1.27 – 1.77 (185 – 256)	–	0.50 – 0.73 (73 – 106)
N	–	2,500	–	–	–	0.31 – 0.39 (44 – 56)	–	0.22 – 0.36 (32 – 52)
Sport mode	1st gear	2,500	0.95 – 1.06 (137 – 153)	–	–	0.95 – 1.06 (137 – 153)	–	0.50 – 0.73 (73 – 106)
	2nd gear	2,500	0.95 – 1.06 (137 – 153)	–	–	–	0.95 – 1.06 (137 – 153)	0.50 – 0.73 (73 –106)
	3rd gear	2,500	0.78 – 0.90 (113 – 131)	–	0.78 – 0.90 (113 – 131)	–	–	-
	4th gear	2,500	–	–	0.78 – 0.90 (113 – 131)	–	0.78 – 0.88 (113 – 128)	-

<5A/T>

MEASUREMENT CONDITION			STANDARD HYDRAULIC PRESSURE MPa (psi)							
TRANS MISSIO N RANG E	SHIFT POSITIO N	ENGINE SPEED (r/min)	UNDERDRI VE CLUTCH PRESSUR E [UD]	REVERSE CLUTCH PRESSUR E [RV]	OVERDRIV E CLUTCH PRESSUR E [OD]	DIRECT CLUTCH PRESSUR E [DIR]	LOW-REVERS E BRAKE PRESSU RE [LR]	SECOND BRAKE PRESSUR E [2ND]	REDUCT ION BRAKE PRESSU RE [RED]	TORQUE CONVER TER CLUTCH PRESSU RE [DR]
P	–	2,500	–	–	–	–	0.31 – 0.39 (44 – 56)	–	0.31 – 0.39 (44 – 56)	0.22 – 0.36 (32 – 52)
R	Revers e	2,500	–	1.27 – 1.77 (185 – 256)	–	–	1.27 – 1.77 (185 – 256)	–	1.27 – 1.77 (185 – 256)	0.50 – 0.73 (73 – 106)
N	–	2,500	–	–	–	–	0.31 – 0.39 (44 – 56)	–	0.31 – 0.39 (44 – 56)	0.22 – 0.36 (32 – 52)

MEASUREMENT CONDITION			STANDARD HYDRAULIC PRESSURE MPa (psi)							
TRANSMISSION RANGE	SHIFT POSITION	ENGINE SPEED (r/min)	UNDERDRIVE CLUTCH PRESSURE [UD]	REVERSE CLUTCH PRESSURE [RV]	OVERDRIVE CLUTCH PRESSURE [OD]	DIRECT CLUTCH PRESSURE [DIR]	LOW-REVERSE BRAKE PRESSURE [LR]	SECOND BRAKE PRESSURE [2ND]	REDUCTION BRAKE PRESSURE [RED]	TORQUE CONVERTER CLUTCH PRESSURE [DR]
Sport mode	1st gear	2,500	0.95 – 1.06 (137 – 153)	–	–	–	0.95 – 1.06 (137 – 153)	–	0.95 – 1.06 (137 – 153)	0.50 – 0.73 (73 – 106)
	2nd gear	2,500	0.95 – 1.06 (137 – 153)	–	–	–	–	0.95 – 1.06 (137 – 153)	0.95 – 1.06 (137 – 153)	0.50 – 0.73 (73 – 106)
	3rd gear	2,500	0.78 – 0.90 (113 – 131)	–	0.78 – 0.90 (113 – 131)	–	–	–	0.78 – 0.88 (113 – 128)	0.45 – 0.72 (65 – 104)
	4th gear	2,500	0.78 – 0.90 (113 – 131)	–	0.78 – 0.90 (113 – 131)	0.78 – 0.88 (113 – 128)	–	–	–	–
	5th gear	2,500	–	–	0.78 – 0.90 (113 – 131)	0.78 – 0.88 (113 – 128)	–	0.78 – 0.88 (113 – 128)	–	–

NOTE: When the torque converter pressure is measured, the engine speed should be 1,500 r/min or less.

HYDRAULIC PRESSURE TEST DIAGNOSIS TABLE

SYMPTOM	PROBABLE CAUSE
All hydraulic pressures are high.	Malfunction of the regulator valve
All hydraulic pressures are low.	Malfunction of the oil pump
	Clogged internal oil filter
	Clogged oil cooler
	Malfunction of the regulator valve
	Malfunction of the relief valve
	Incorrect valve body installation
	Improperly installed solenoid valves
	Damaged solenoid valve O-rings
Hydraulic pressure is abnormal in reverse gear only.	Malfunction of the regulator valve
	Clogged orifice
	Incorrect valve body installation
Hydraulic pressure is abnormal in 3rd or 4th gear only.	Malfunction of the overdrive solenoid valve
	Malfunction of the overdrive pressure control valve
	Malfunction of the regulator valve
	Malfunction of the switch valve
	Clogged orifice
	Incorrect valve body installation
Only underdrive clutch hydraulic pressure is abnormal.	Malfunction of the oil seal K
	Malfunction of the oil seal L
	Malfunction of the oil seal M
	Malfunction of the underdrive solenoid valve
	Malfunction of the underdrive pressure control valve
	Malfunction of the check ball
	Clogged orifice
	Incorrect valve body installation
	Malfunction of the accumulator for underdrive clutch
Only reverse clutch hydraulic pressure is abnormal.	Malfunction of the oil seal A
	Malfunction of the oil seal B
	Malfunction of the oil seal C
	Clogged orifice
	Incorrect valve body installation

SYMPTOM	PROBABLE CAUSE
Only overdrive clutch hydraulic pressure is abnormal.	Malfunction of the oil seal D
	Malfunction of the oil seal E
	Malfunction of the oil seal F
	Malfunction of the overdrive solenoid valve
	Malfunction of the overdrive pressure control valve
	Malfunction of the check ball
	Clogged orifice
	Incorrect valve body installation
	Malfunction of the accumulator for overdrive clutch
Only direct clutch hydraulic pressure is abnormal <5A/T>.	Malfunction of the oil seal R
	Malfunction of the oil seal S
	Malfunction of the oil seal T
	Malfunction of the low-reverse solenoid valve (Shared with direct clutch)
	Malfunction of the low-reverse pressure control valve
	Malfunction of the switch valve
	Malfunction of the fail safe valve C
	Clogged orifice
	Incorrect valve body installation
Only low-reverse brake hydraulic pressure is abnormal.	Malfunction of the oil seal I
	Malfunction of the oil seal J
	Malfunction of the low-reverse solenoid valve
	Malfunction of the low-reverse pressure control valve
	Malfunction of the switch valve
	Malfunction of the fail safe valve A
	Malfunction of all the check balls
	Clogged orifice
	Incorrect valve body installation
	Malfunction of the accumulator for low-reverse brake
Only second brake hydraulic pressure is abnormal.	Malfunction of the oil seal G
	Malfunction of the oil seal H
	Malfunction of the oil seal O
	Malfunction of the second solenoid valve
	Malfunction of the second pressure control valve
	Malfunction of the fail safe valve B
	Clogged orifice
	Incorrect valve body installation
	Malfunction of the accumulator for second brake

SYMPTOM	PROBABLE CAUSE
Only reduction brake hydraulic pressure is abnormal <5A/T>.	Malfunction of the oil seal P
	Malfunction of the oil seal Q
	Malfunction of the reduction solenoid valve
	Malfunction of the reduction pressure control valve
	Clogged orifice
	Incorrect valve body installation
Only torque converter pressure is abnormal.	Clogged oil cooler
	Malfunction of the oil seal N
	Malfunction of the torque converter clutch solenoid
	Malfunction of the torque converter pressure control valve
	Clogged orifice
	Incorrect valve body installation
Pressure applied to element which should not receive pressure.	Incorrect transaxle control cable adjustment
	Malfunction of the manual valve
	Malfunction of the check ball
	Incorrect valve body installation

OIL SEAL LAYOUT

<4A/T>

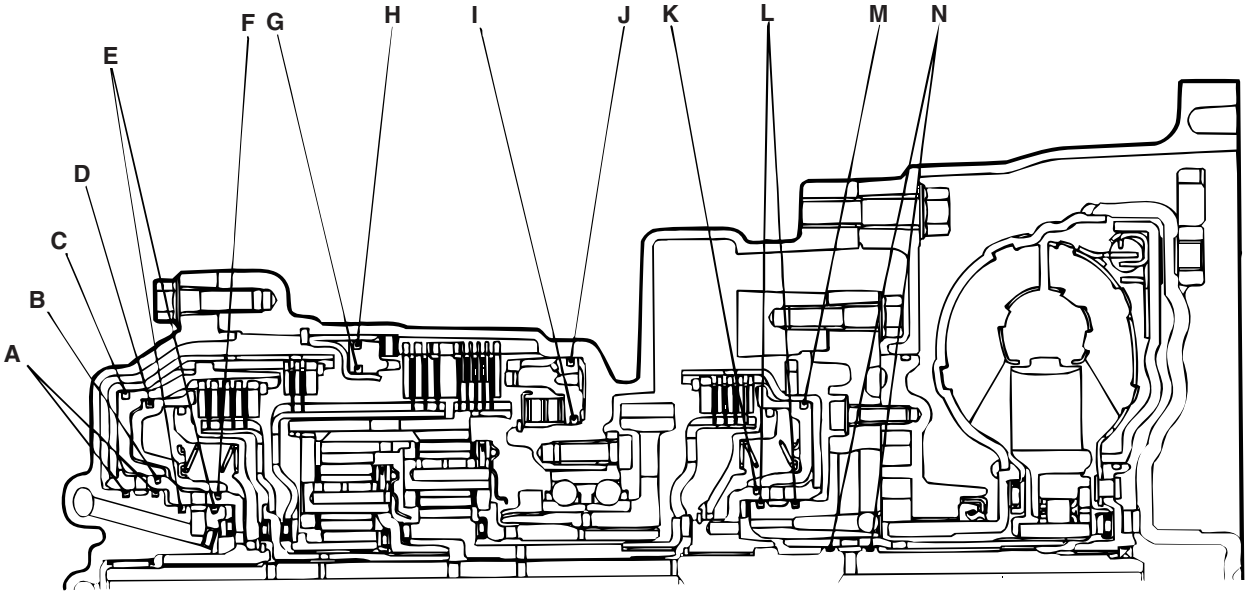

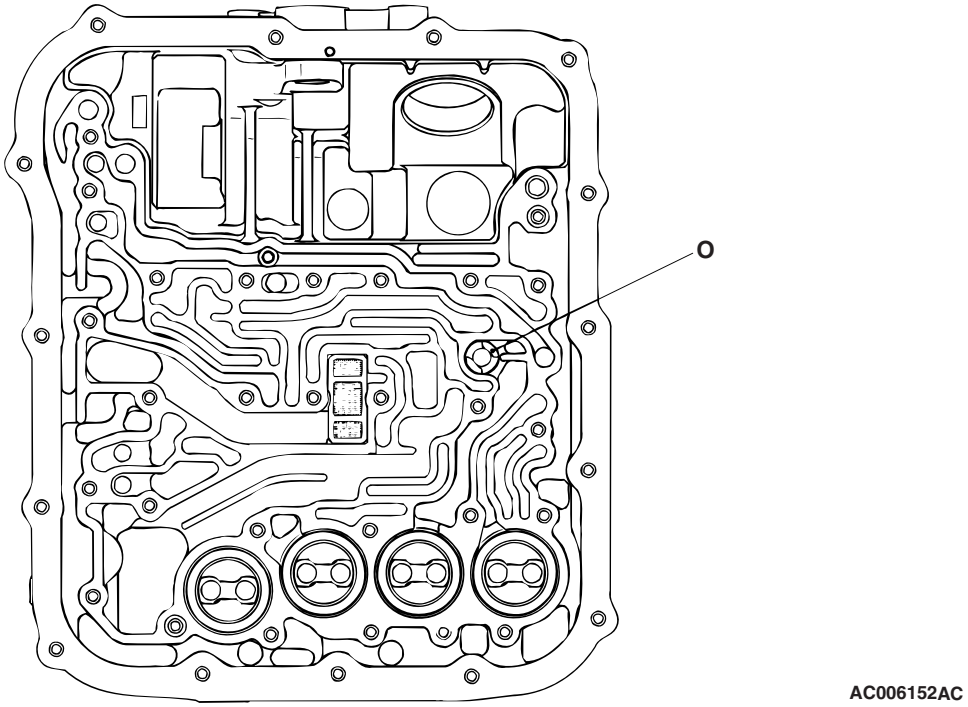

<5A/T>

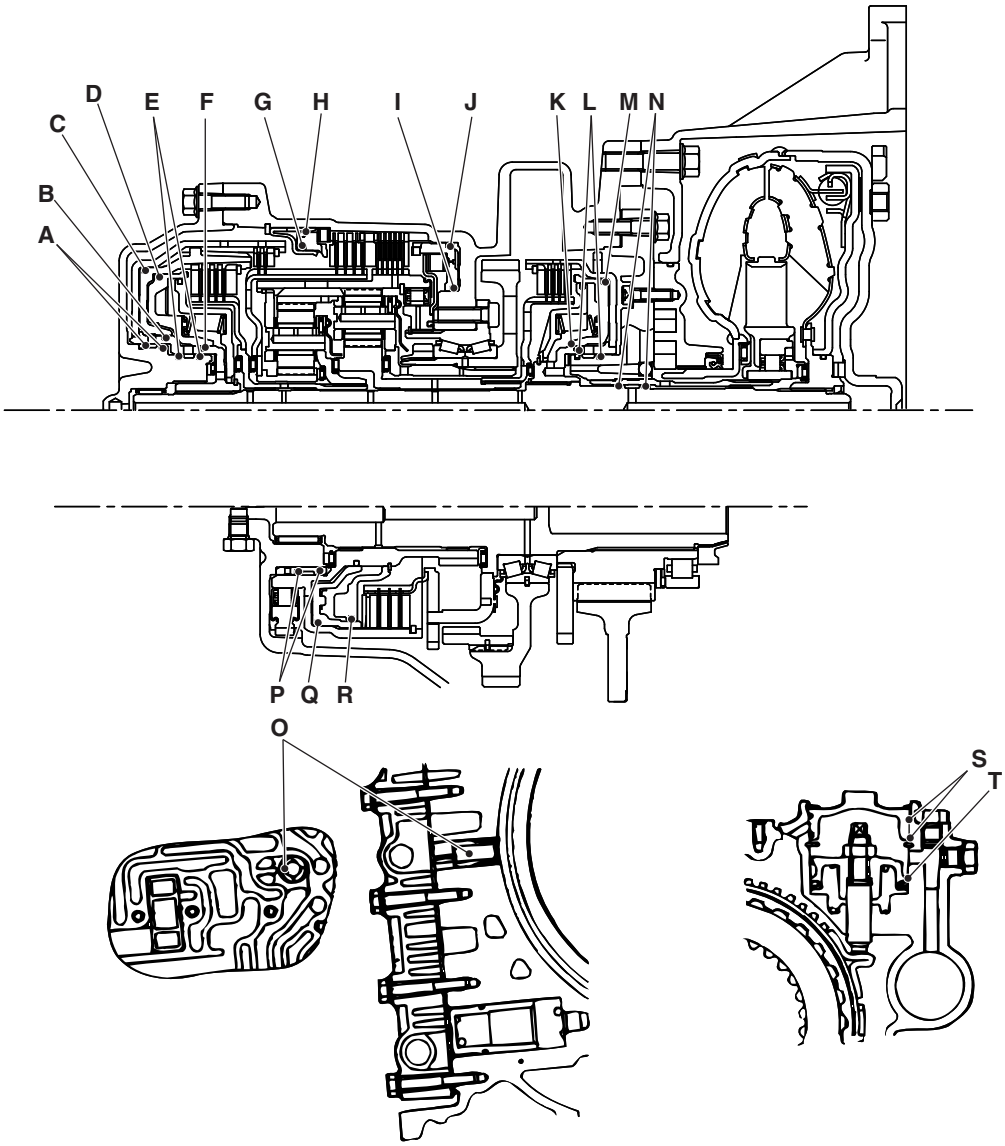

AC407213 AB

HYDRAULIC CIRCUIT

M1231008800433

PARKING AND NEUTRAL <4A/T>

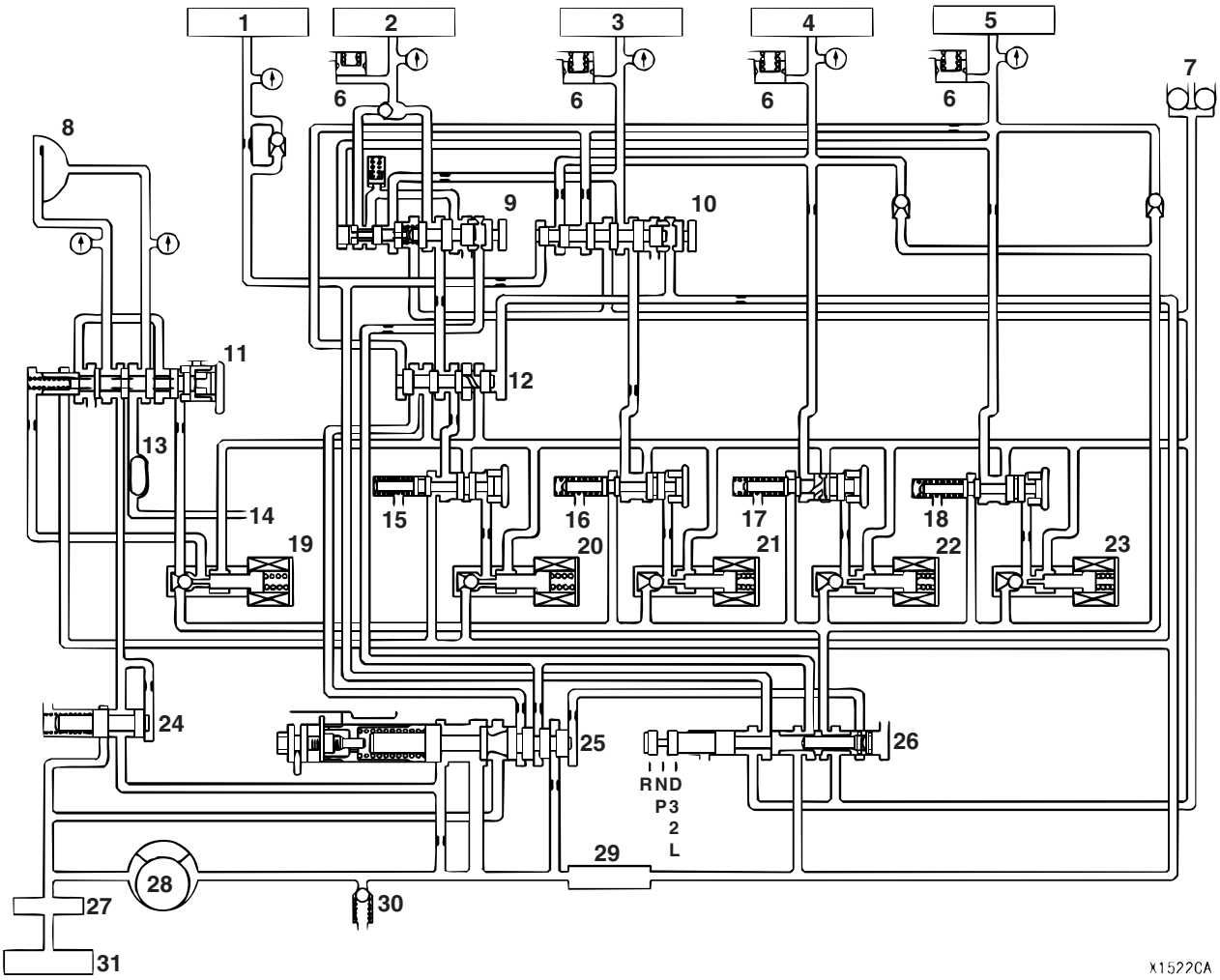

: LINE PRESSURE

: OIL PUMP SUCTION PRESSURE

: TORQUE CONVERTER CLUTCH PRESSURE

: TORQUE CONVERTER AND LUBRICATION PRESSURE

: TORQUE CONVERTER CLUTCH SOLENOID VALVE PRESSURE

1. REVERSE CLUTCH
2. LOW-REVERSE BRAKE
3. SECOND BRAKE
4. UNDERDRIVE CLUTCH
5. OVERDRIVE CLUTCH
6. ACCUMULATOR
7. CHECK BALL
8. TORQUE CONVERTER CLUTCH
9. FAIL SAFE VALVE A
10. FAIL SAFE VALVE B
11. TORQUE CONVERTER CLUTCH CONTROL VALVE
12. SWITCH VALVE
13. TRANSMISSION FLUID COOLER
14. LUBRICATION
15. LOW-REVERSE PRESSURE CONTROL VALVE
16. SECOND PRESSURE CONTROL VALVE
17. UNDERDRIVE PRESSURE CONTROL VALVE
18. OVERDRIVE PRESSURE CONTROL VALVE
19. TORQUE CONVERTER CLUTCH SOLENOID VALVE
20. LOW-REVERSE SOLENOID VALVE
21. SECOND SOLENOID VALVE
22. UNDERDRIVE SOLENOID VALVE
23. OVERDRIVE SOLENOID VALVE
24. TORQUE CONVERTER PRESSURE CONTROL VALVE
25. REGULATOR VALVE
26. MANUAL VALVE
27. OIL FILTER
28. OIL PUMP
29. OIL STRAINER
30. RELIEF VALVE
31. OIL PAN

TSB Revision

1ST GEAR <4A/T>

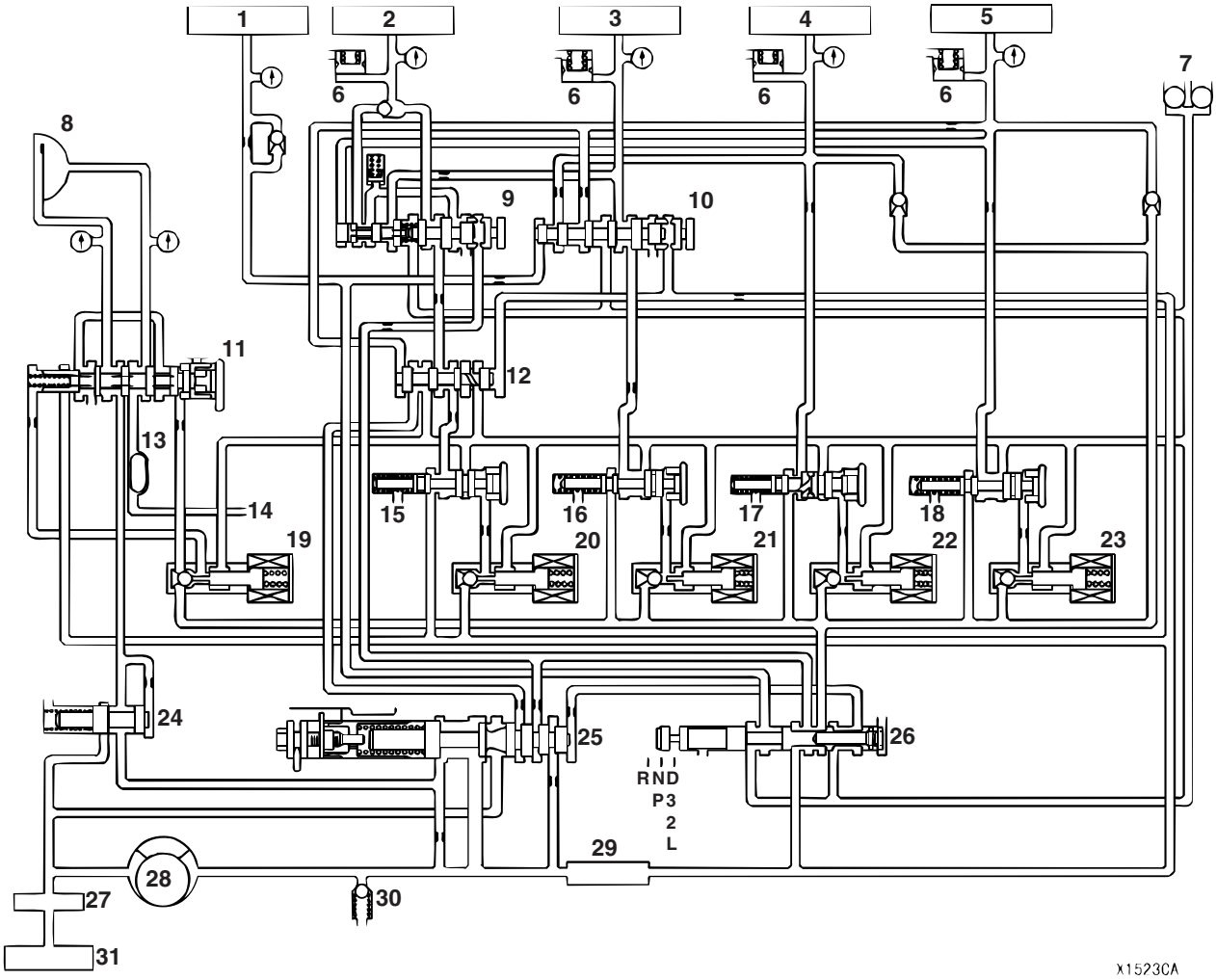

: LINE PRESSURE

: OIL PUMP SUCTION PRESSURE

: TORQUE CONVERTER CLUTCH PRESSURE

: TORQUE CONVERTER AND LUBRICATION PRESSURE

: TORQUE CONVERTER CLUTCH SOLENOID VALVE PRESSURE

1. REVERSE CLUTCH
2. LOW-REVERSE BRAKE
3. SECOND BRAKE
4. UNDERDRIVE CLUTCH
5. OVERDRIVE CLUTCH
6. ACCUMULATOR
7. CHECK BALL
8. TORQUE CONVERTER CLUTCH
9. FAIL SAFE VALVE A
10. FAIL SAFE VALVE B
11. TORQUE CONVERTER CLUTCH CONTROL VALVE
12. SWITCH VALVE
13. TRANSMISSION FLUID COOLER
14. LUBRICATION
15. LOW-REVERSE PRESSURE CONTROL VALVE
16. SECOND PRESSURE CONTROL VALVE
17. UNDERDRIVE PRESSURE CONTROL VALVE
18. OVERDRIVE PRESSURE CONTROL VALVE
19. TORQUE CONVERTER CLUTCH SOLENOID VALVE
20. LOW-REVERSE SOLENOID VALVE
21. SECOND SOLENOID VALVE
22. UNDERDRIVE SOLENOID VALVE
23. OVERDRIVE SOLENOID VALVE
24. TORQUE CONVERTER PRESSURE CONTROL VALVE
25. REGULATOR VALVE
26. MANUAL VALVE
27. OIL FILTER
28. OIL PUMP
29. OIL STRAINER
30. RELIEF VALVE
31. OIL PAN

2ND GEAR <4A/T>

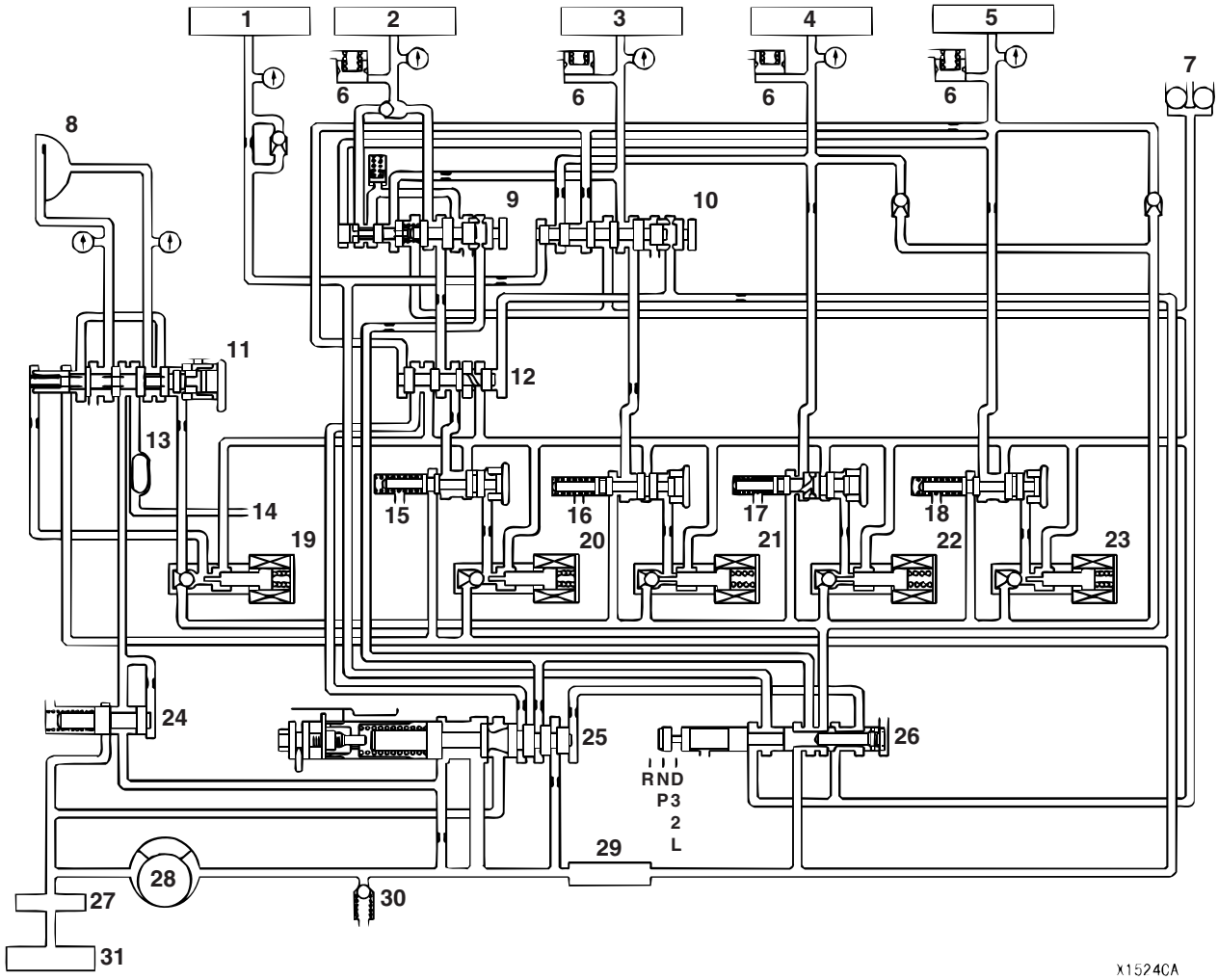

: LINE PRESSURE

: OIL PUMP SUCTION PRESSURE

: TORQUE CONVERTER CLUTCH PRESSURE

: TORQUE CONVERTER AND LUBRICATION PRESSURE

: TORQUE CONVERTER CLUTCH SOLENOID VALVE PRESSURE

1. REVERSE CLUTCH
2. LOW-REVERSE BRAKE
3. SECOND BRAKE
4. UNDERDRIVE CLUTCH
5. OVERDRIVE CLUTCH
6. ACCUMULATOR
7. CHECK BALL
8. TORQUE CONVERTER CLUTCH
9. FAIL SAFE VALVE A
10. FAIL SAFE VALVE B
11. TORQUE CONVERTER CLUTCH CONTROL VALVE
12. SWITCH VALVE
13. TRANSMISSION FLUID COOLER
14. LUBRICATION
15. LOW-REVERSE PRESSURE CONTROL VALVE
16. SECOND PRESSURE CONTROL VALVE
17. UNDERDRIVE PRESSURE CONTROL VALVE
18. OVERDRIVE PRESSURE CONTROL VALVE
19. TORQUE CONVERTER CLUTCH SOLENOID VALVE
20. LOW-REVERSE SOLENOID VALVE
21. SECOND SOLENOID VALVE
22. UNDERDRIVE SOLENOID VALVE
23. OVERDRIVE SOLENOID VALVE
24. TORQUE CONVERTER PRESSURE CONTROL VALVE
25. REGULATOR VALVE
26. MANUAL VALVE
27. OIL FILTER
28. OIL PUMP
29. OIL STRAINER
30. RELIEF VALVE
31. OIL PAN

3RD GEAR <4A/T>

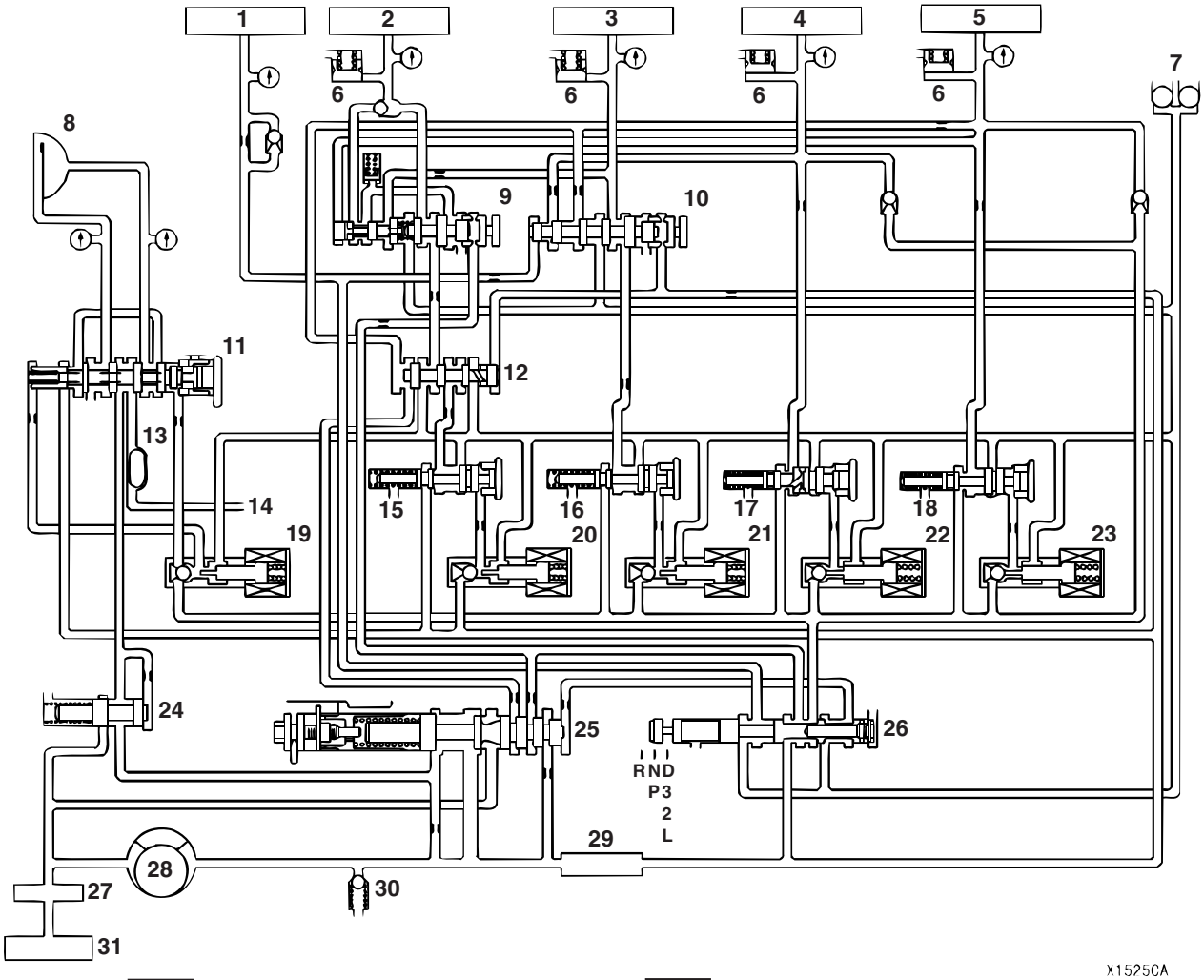

: LINE PRESSURE

: OIL PUMP SUCTION PRESSURE

: TORQUE CONVERTER CLUTCH PRESSURE

: TORQUE CONVERTER AND LUBRICATION PRESSURE

: TORQUE CONVERTER CLUTCH SOLENOID VALVE PRESSURE

1. REVERSE CLUTCH
2. LOW-REVERSE BRAKE
3. SECOND BRAKE
4. UNDERDRIVE CLUTCH
5. OVERDRIVE CLUTCH
6. ACCUMULATOR
7. CHECK BALL
8. TORQUE CONVERTER CLUTCH
9. FAIL SAFE VALVE A
10. FAIL SAFE VALVE B
11. TORQUE CONVERTER CLUTCH CONTROL VALVE
12. SWITCH VALVE
13. TRANSMISSION FLUID COOLER
14. LUBRICATION
15. LOW-REVERSE PRESSURE CONTROL VALVE
16. SECOND PRESSURE CONTROL VALVE
17. UNDERDRIVE PRESSURE CONTROL VALVE
18. OVERDRIVE PRESSURE CONTROL VALVE
19. TORQUE CONVERTER CLUTCH SOLENOID VALVE
20. LOW-REVERSE SOLENOID VALVE
21. SECOND SOLENOID VALVE
22. UNDERDRIVE SOLENOID VALVE
23. OVERDRIVE SOLENOID VALVE
24. TORQUE CONVERTER PRESSURE CONTROL VALVE
25. REGULATOR VALVE
26. MANUAL VALVE
27. OIL FILTER
28. OIL PUMP
29. OIL STRAINER
30. RELIEF VALVE
31. OIL PAN

4TH GEAR <4A/T>

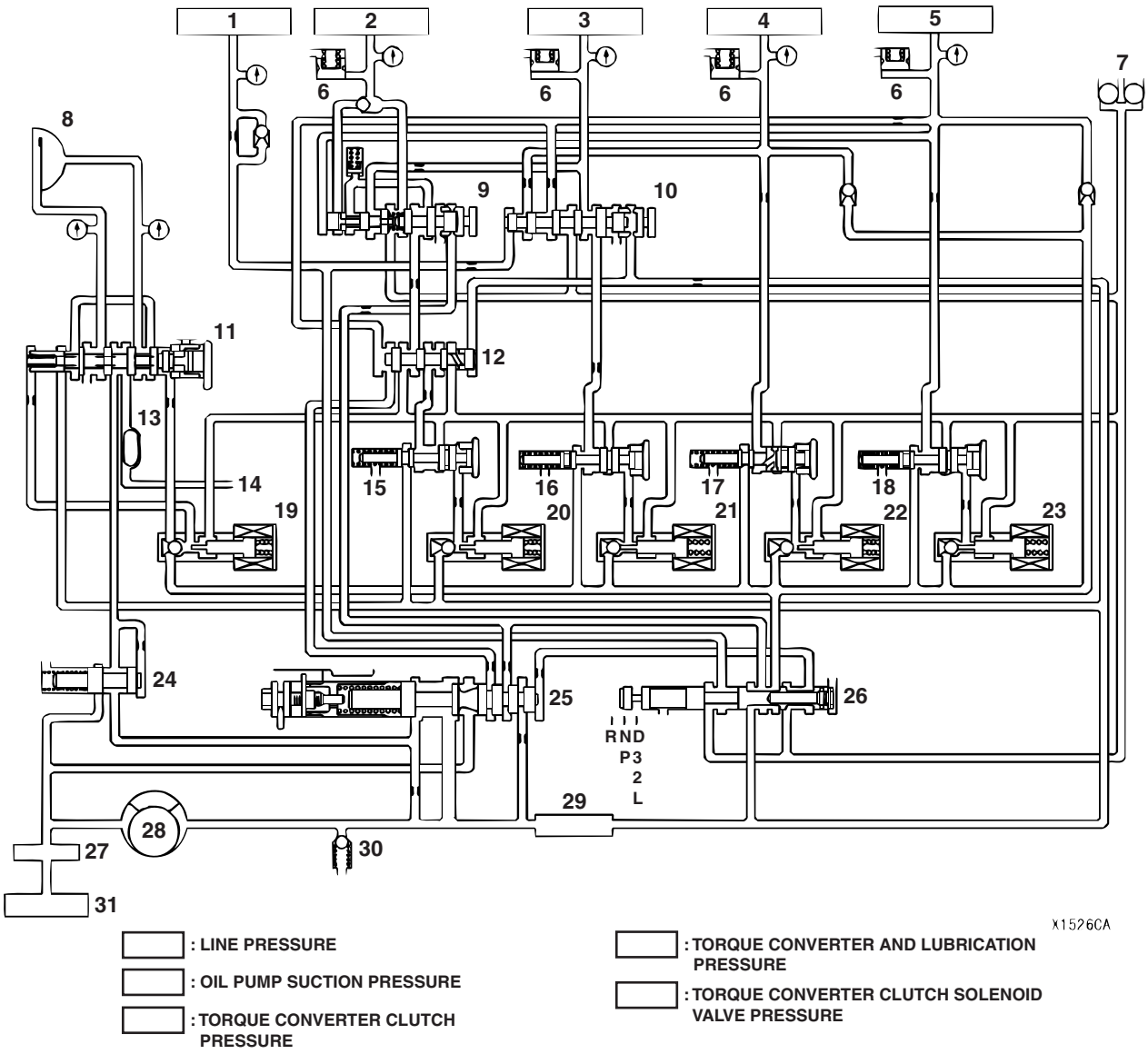

1. REVERSE CLUTCH
2. LOW-REVERSE BRAKE
3. SECOND BRAKE
4. UNDERDRIVE CLUTCH
5. OVERDRIVE CLUTCH
6. ACCUMULATOR
7. CHECK BALL
8. TORQUE CONVERTER CLUTCH
9. FAIL SAFE VALVE A
10. FAIL SAFE VALVE B
11. TORQUE CONVERTER CLUTCH CONTROL VALVE
12. SWITCH VALVE
13. TRANSMISSION FLUID COOLER
14. LUBRICATION
15. LOW-REVERSE PRESSURE CONTROL VALVE
16. SECOND PRESSURE CONTROL VALVE
17. UNDERDRIVE PRESSURE CONTROL VALVE
18. OVERDRIVE PRESSURE CONTROL VALVE
19. TORQUE CONVERTER CLUTCH SOLENOID VALVE
20. LOW-REVERSE SOLENOID VALVE
21. SECOND SOLENOID VALVE
22. UNDERDRIVE SOLENOID VALVE
23. OVERDRIVE SOLENOID VALVE
24. TORQUE CONVERTER PRESSURE CONTROL VALVE
25. REGULATOR VALVE
26. MANUAL VALVE
27. OIL FILTER
28. OIL PUMP
29. OIL STRAINER
30. RELIEF VALVE
31. OIL PAN

REVERSE GEAR <4A/T>

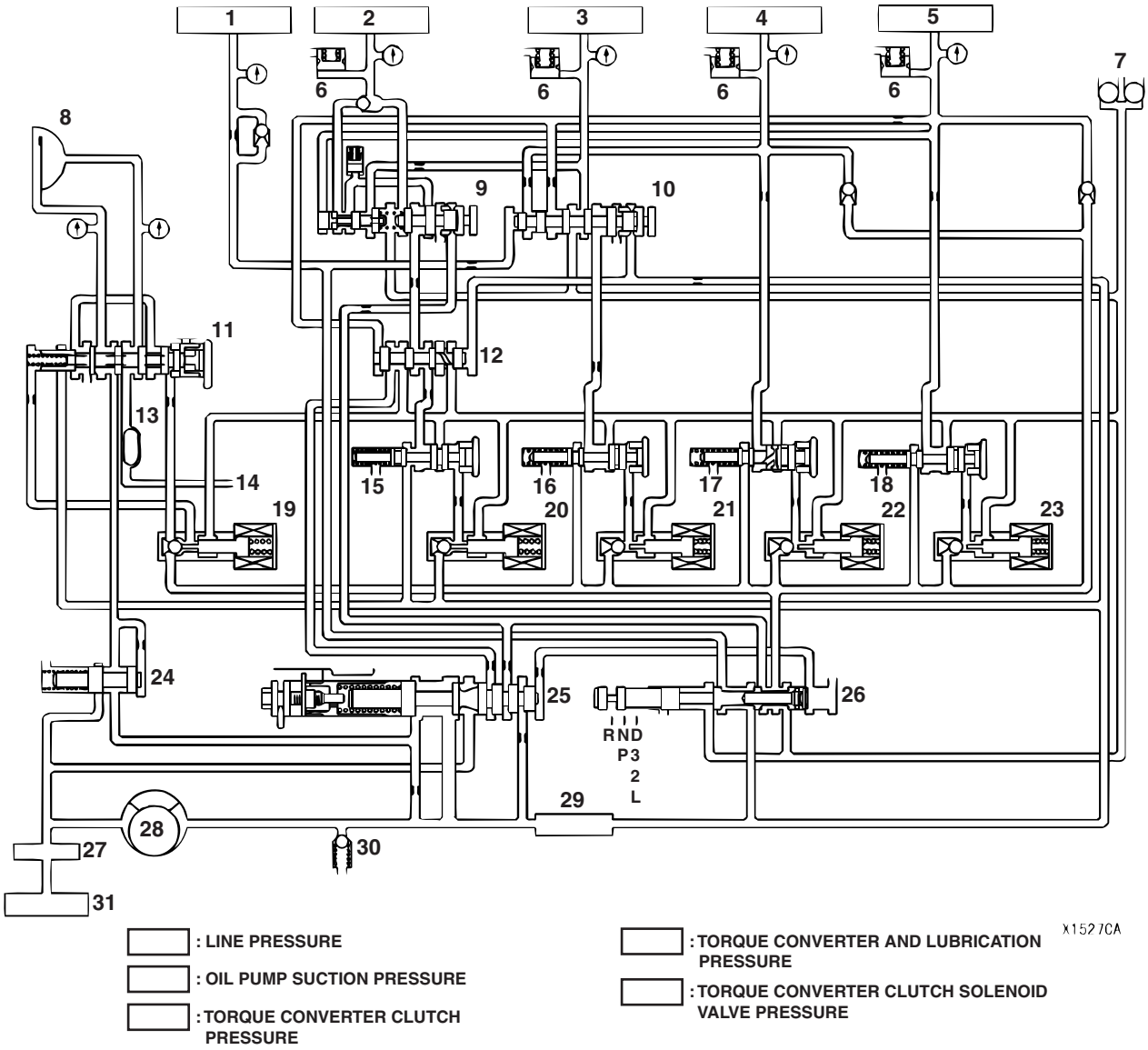

1. REVERSE CLUTCH
2. LOW-REVERSE BRAKE
3. SECOND BRAKE
4. UNDERDRIVE CLUTCH
5. OVERDRIVE CLUTCH
6. ACCUMULATOR
7. CHECK BALL
8. TORQUE CONVERTER CLUTCH
9. FAIL SAFE VALVE A
10. FAIL SAFE VALVE B
11. TORQUE CONVERTER CLUTCH CONTROL VALVE
12. SWITCH VALVE
13. TRANSMISSION FLUID COOLER
14. LUBRICATION
15. LOW-REVERSE PRESSURE CONTROL VALVE
16. SECOND PRESSURE CONTROL VALVE
17. UNDERDRIVE PRESSURE CONTROL VALVE
18. OVERDRIVE PRESSURE CONTROL VALVE
19. TORQUE CONVERTER CLUTCH SOLENOID VALVE
20. LOW-REVERSE SOLENOID VALVE
21. SECOND SOLENOID VALVE
22. UNDERDRIVE SOLENOID VALVE
23. OVERDRIVE SOLENOID VALVE
24. TORQUE CONVERTER PRESSURE CONTROL VALVE
25. REGULATOR VALVE
26. MANUAL VALVE
27. OIL FILTER
28. OIL PUMP
29. OIL STRAINER
30. RELIEF VALVE
31. OIL PAN

FAIL-SAFE (IN CASE OF FAIL-SAFE VALVE A OPERATION) <4A/T>

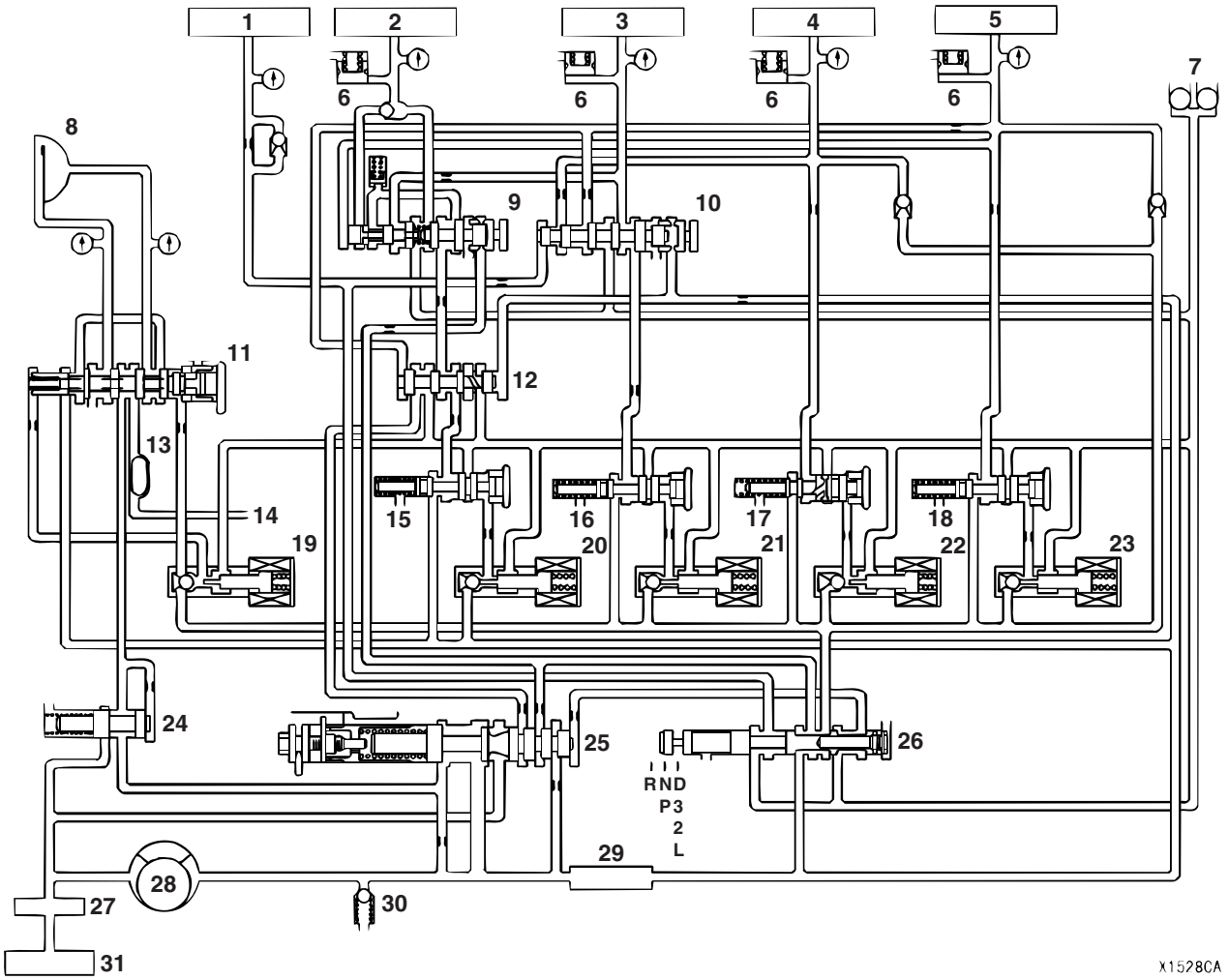

: LINE PRESSURE

: OIL PUMP SUCTION PRESSURE

: TORQUE CONVERTER CLUTCH PRESSURE

: TORQUE CONVERTER AND LUBRICATION PRESSURE

: TORQUE CONVERTER CLUTCH SOLENOID VALVE PRESSURE

1. REVERSE CLUTCH
2. LOW-REVERSE BRAKE
3. SECOND BRAKE
4. UNDERDRIVE CLUTCH
5. OVERDRIVE CLUTCH
6. ACCUMULATOR
7. CHECK BALL
8. TORQUE CONVERTER CLUTCH
9. FAIL SAFE VALVE A
10. FAIL SAFE VALVE B
11. TORQUE CONVERTER CLUTCH CONTROL VALVE
12. SWITCH VALVE
13. TRANSMISSION FLUID COOLER
14. LUBRICATION
15. LOW-REVERSE PRESSURE CONTROL VALVE
16. SECOND PRESSURE CONTROL VALVE
17. UNDERDRIVE PRESSURE CONTROL VALVE
18. OVERDRIVE PRESSURE CONTROL VALVE
19. TORQUE CONVERTER CLUTCH SOLENOID VALVE
20. LOW-REVERSE SOLENOID VALVE
21. SECOND SOLENOID VALVE
22. UNDERDRIVE SOLENOID VALVE
23. OVERDRIVE SOLENOID VALVE
24. TORQUE CONVERTER PRESSURE CONTROL VALVE
25. REGULATOR VALVE
26. MANUAL VALVE
27. OIL FILTER
28. OIL PUMP
29. OIL STRAINER
30. RELIEF VALVE
31. OIL PAN

FAIL-SAFE (IN CASE OF FAIL-SAFE VALVE B OPERATION) <4A/T>

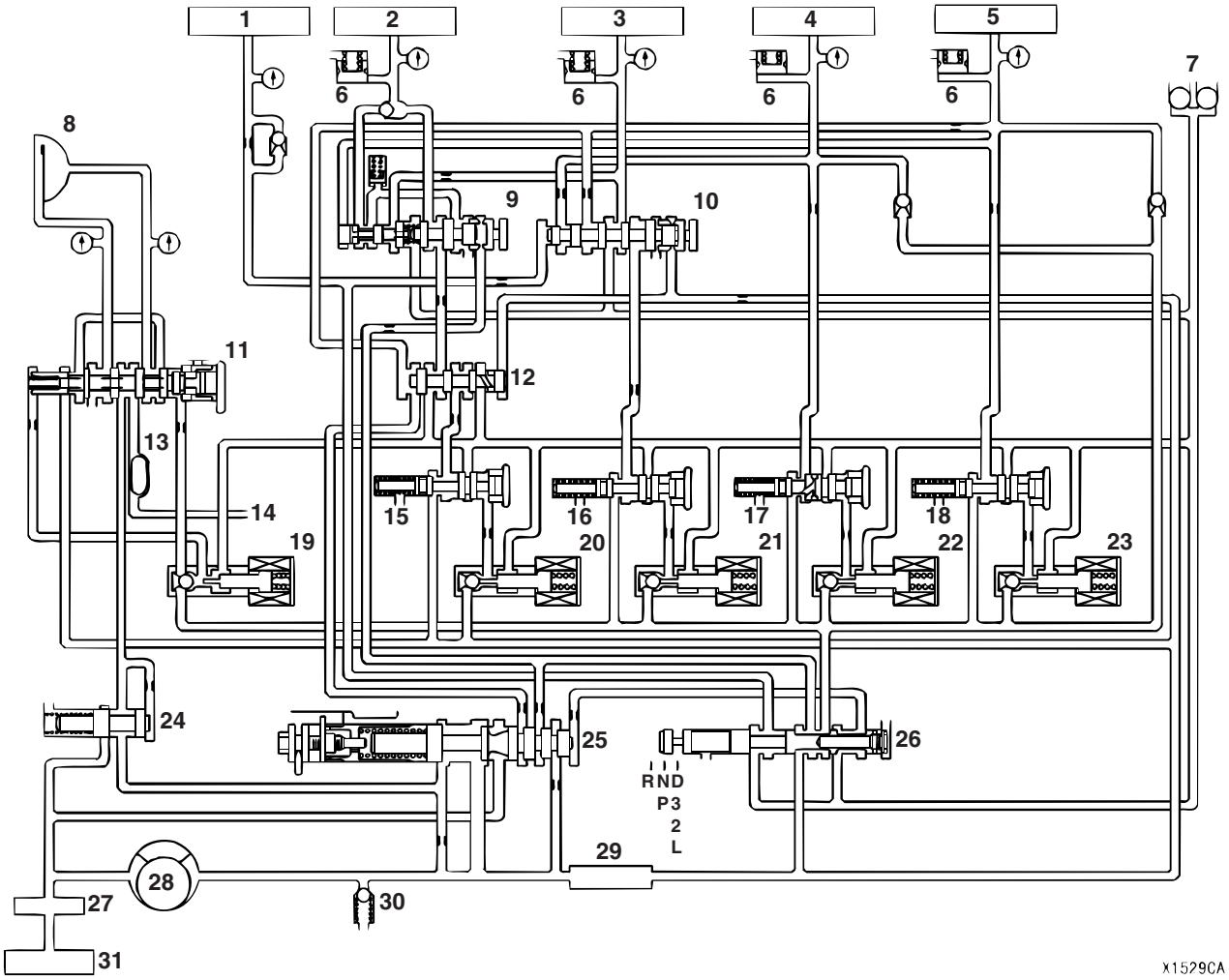

1. REVERSE CLUTCH
2. LOW-REVERSE BRAKE
3. SECOND BRAKE
4. UNDERDRIVE CLUTCH
5. OVERDRIVE CLUTCH
6. ACCUMULATOR
7. CHECK BALL
8. TORQUE CONVERTER CLUTCH
9. FAIL SAFE VALVE A
10. FAIL SAFE VALVE B
11. TORQUE CONVERTER CLUTCH CONTROL VALVE
12. SWITCH VALVE
13. TRANSMISSION FLUID COOLER
14. LUBRICATION
15. LOW-REVERSE PRESSURE CONTROL VALVE
16. SECOND PRESSURE CONTROL VALVE
17. UNDERDRIVE PRESSURE CONTROL VALVE
18. OVERDRIVE PRESSURE CONTROL VALVE
19. TORQUE CONVERTER CLUTCH SOLENOID VALVE
20. LOW-REVERSE SOLENOID VALVE
21. SECOND SOLENOID VALVE
22. UNDERDRIVE SOLENOID VALVE
23. OVERDRIVE SOLENOID VALVE
24. TORQUE CONVERTER PRESSURE CONTROL VALVE
25. REGULATOR VALVE
26. MANUAL VALVE
27. OIL FILTER
28. OIL PUMP
29. OIL STRAINER
30. RELIEF VALVE
31. OIL PAN

PARKING AND NEUTRAL <5A/T>

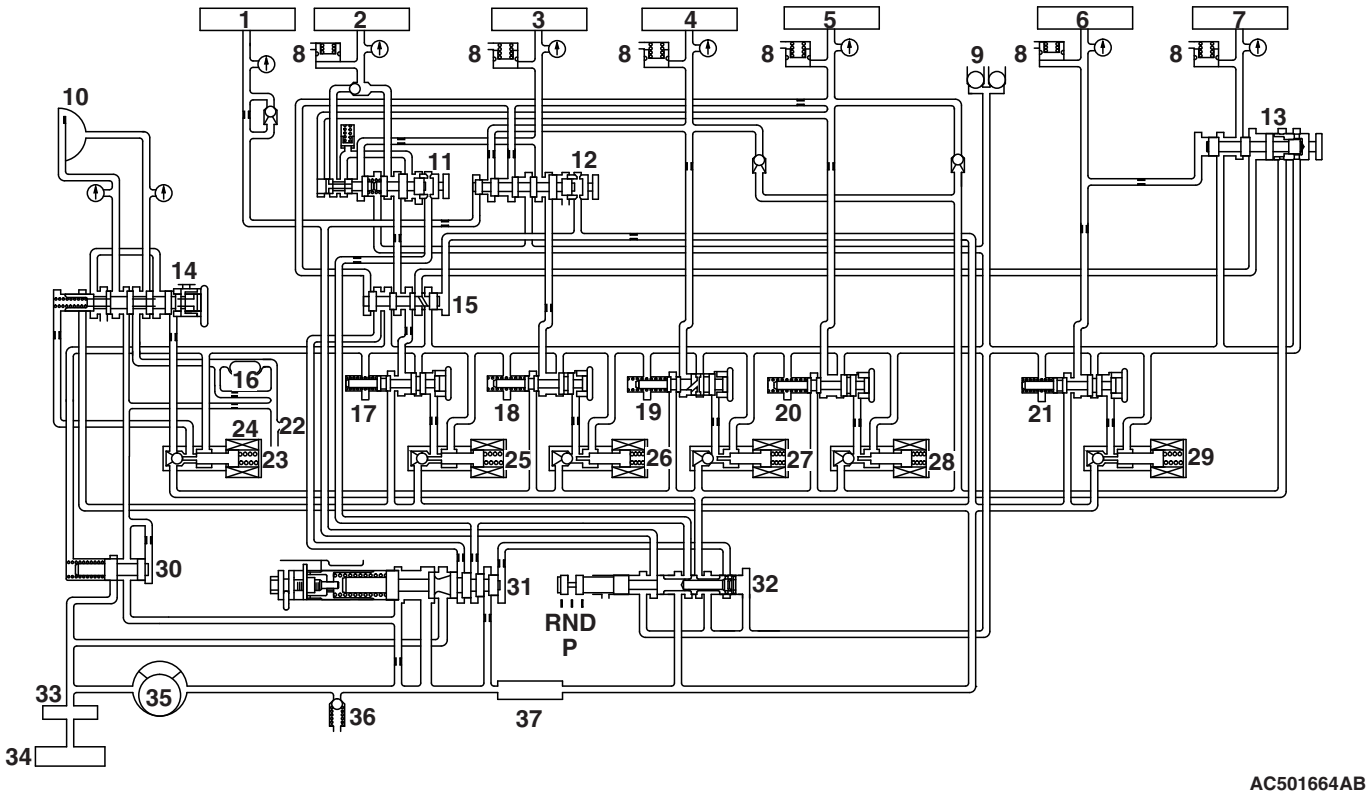

: LINE PRESSURE

: OIL PUMP SUCTION PRESSURE

: TORQUE CONVERTER CLUTCH PRESSURE

: TORQUE CONVERTER AND LUBRICATION PRESSURE

: TORQUE CONVERTER CLUTCH SOLENOID VALVE PRESSURE

1. REVERSE CLUTCH
2. LOW-REVERSE BRAKE
3. SECOND BRAKE
4. UNDERDRIVE CLUTCH
5. OVERDRIVE CLUTCH
6. REDUCTION BRAKE
7. DIRECT CLUTCH
8. ACCUMULATOR
9. CHECK BALL
10. TORQUE CONVERTER CLUTCH
11. FAIL SAFE VALVE A
12. FAIL SAFE VALVE B
13. FAIL SAFE VALVE C
14. TORQUE CONVERTER CLUTCH CONTROL VALVE
15. SWITCH VALVE
16. TRANSMISSION FLUID COOLER
17. LOW-REVERSE PRESSURE CONTROL VALVE
18. SECOND PRESSURE CONTROL VALVE
19 UNDERDRIVE PRESSURE CONTROL VALVE
20. OVERDRIVE PRESSURE CONTROL VALVE
21. REDUCTION PRESSURE CONTROL VALVE
22. LUBRICATION
23. LUBRICATION
24. TORQUE CONVERTER CLUTCH SOLENOID VALVE
25. LOW-REVERSE SOLENOID VALVE
26. SECOND SOLENOID VALVE
27. UNDERDRIVE SOLENOID VALVE
28. OVERDRIVE SOLENOID VALVE
29. REDUCTION SOLENOID VALVE
30 TORQUE CONVERTER PRESSURE CONTROL VALVE
31. REGULATOR VALVE
32. MANUAL VALVE
33. OIL FILTER
34. OIL PUMP
35. OIL STRAINER
36. RELIEF VALVE
37. OIL PAN

1ST GEAR <5A/T>

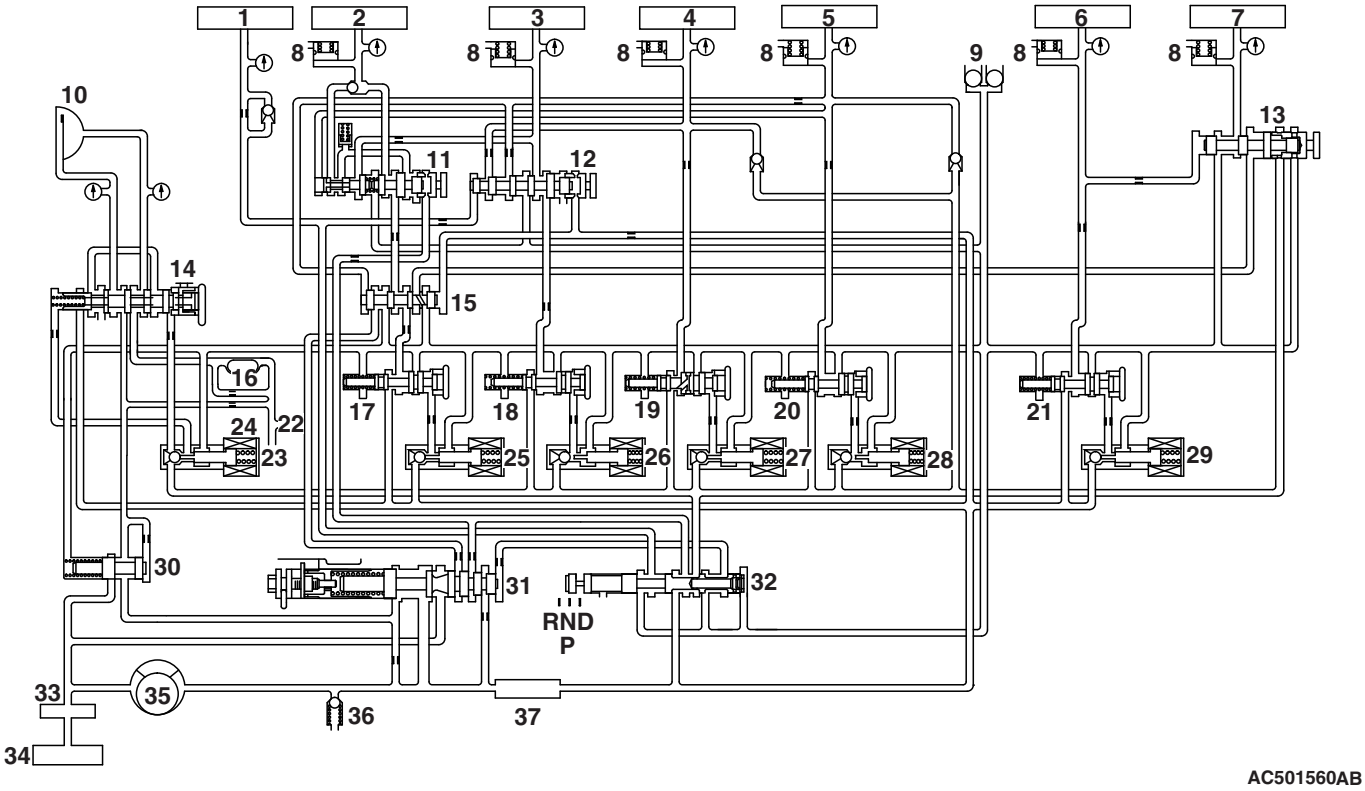

: LINE PRESSURE

: OIL PUMP SUCTION PRESSURE

: TORQUE CONVERTER CLUTCH PRESSURE

: TORQUE CONVERTER AND LUBRICATION PRESSURE

: TORQUE CONVERTER CLUTCH SOLENOID VALVE PRESSURE

1. REVERSE CLUTCH
2. LOW-REVERSE BRAKE
3. SECOND BRAKE
4. UNDERDRIVE CLUTCH
5. OVERDRIVE CLUTCH
6. REDUCTION BRAKE
7. DIRECT CLUTCH
8. ACCUMULATOR
9. CHECK BALL
10. TORQUE CONVERTER CLUTCH
11. FAIL SAFE VALVE A
12. FAIL SAFE VALVE B
13. FAIL SAFE VALVE C
14. TORQUE CONVERTER CLUTCH CONTROL VALVE
15. SWITCH VALVE
16. TRANSMISSION FLUID COOLER
17. LOW-REVERSE PRESSURE CONTROL VALVE
18. SECOND PRESSURE CONTROL VALVE
19 UNDERDRIVE PRESSURE CONTROL VALVE
20. OVERDRIVE PRESSURE CONTROL VALVE
21. REDUCTION PRESSURE CONTROL VALVE
22. LUBRICATION
23. LUBRICATION
24. TORQUE CONVERTER CLUTCH SOLENOID VALVE
25. LOW-REVERSE SOLENOID VALVE
26. SECOND SOLENOID VALVE
27. UNDERDRIVE SOLENOID VALVE
28. OVERDRIVE SOLENOID VALVE
29. REDUCTION SOLENOID VALVE
30 TORQUE CONVERTER PRESSURE CONTROL VALVE
31. REGULATOR VALVE
32. MANUAL VALVE
33. OIL FILTER
34. OIL PUMP
35. OIL STRAINER
36. RELIEF VALVE
37. OIL PAN

2ND GEAR <5A/T>

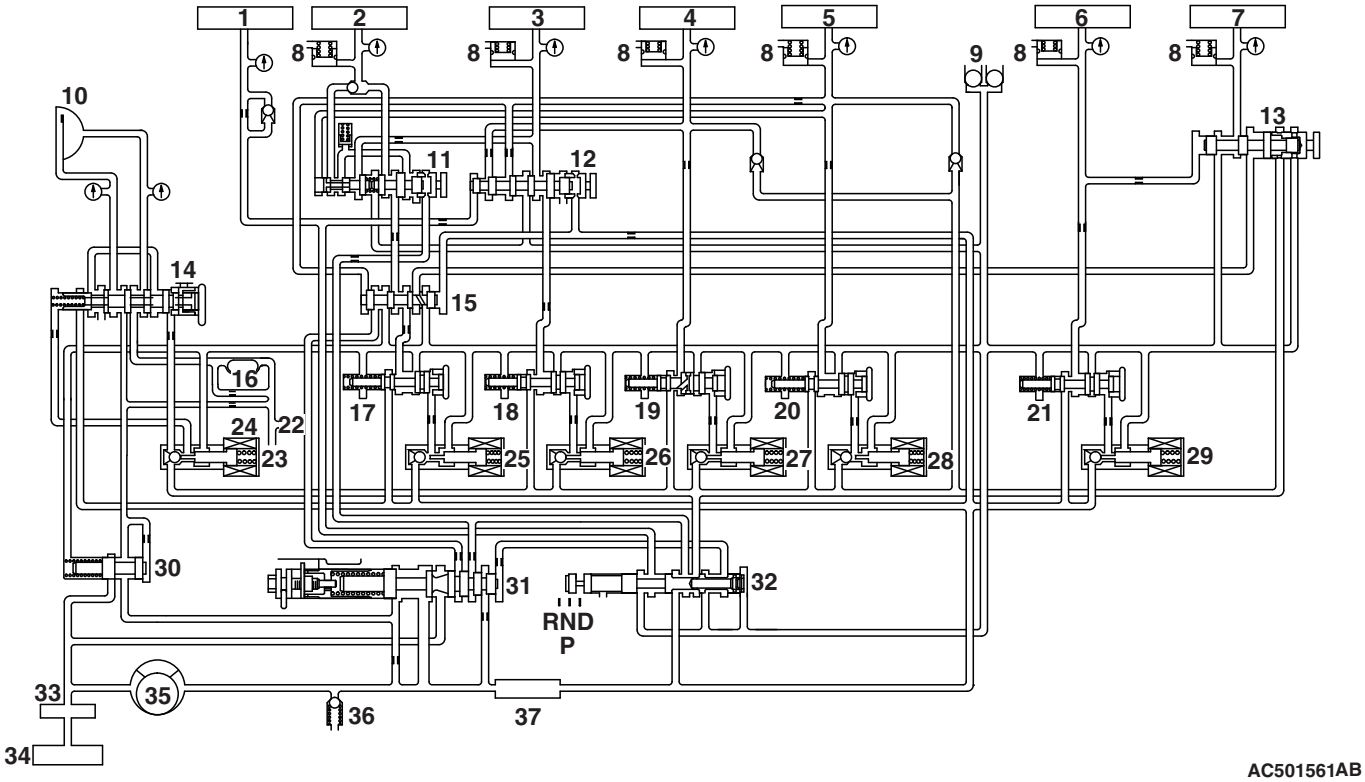

: LINE PRESSURE

: OIL PUMP SUCTION PRESSURE

: TORQUE CONVERTER CLUTCH PRESSURE

: TORQUE CONVERTER AND LUBRICATION PRESSURE

: TORQUE CONVERTER CLUTCH SOLENOID VALVE PRESSURE

1. REVERSE CLUTCH
2. LOW-REVERSE BRAKE
3. SECOND BRAKE
4. UNDERDRIVE CLUTCH
5. OVERDRIVE CLUTCH
6. REDUCTION BRAKE
7. DIRECT CLUTCH
8. ACCUMULATOR
9. CHECK BALL
10. TORQUE CONVERTER CLUTCH
11. FAIL SAFE VALVE A
12. FAIL SAFE VALVE B
13. FAIL SAFE VALVE C
14. TORQUE CONVERTER CLUTCH CONTROL VALVE
15. SWITCH VALVE
16. TRANSMISSION FLUID COOLER
17. LOW-REVERSE PRESSURE CONTROL VALVE
18. SECOND PRESSURE CONTROL VALVE
19 UNDERDRIVE PRESSURE CONTROL VALVE
20. OVERDRIVE PRESSURE CONTROL VALVE
21. REDUCTION PRESSURE CONTROL VALVE
22. LUBRICATION
23. LUBRICATION
24. TORQUE CONVERTER CLUTCH SOLENOID VALVE
25. LOW-REVERSE SOLENOID VALVE
26. SECOND SOLENOID VALVE
27. UNDERDRIVE SOLENOID VALVE
28. OVERDRIVE SOLENOID VALVE
29. REDUCTION SOLENOID VALVE
30 TORQUE CONVERTER PRESSURE CONTROL VALVE
31. REGULATOR VALVE
32. MANUAL VALVE
33. OIL FILTER
34. OIL PUMP
35. OIL STRAINER
36. RELIEF VALVE
37. OIL PAN

3RD GEAR <5A/T>

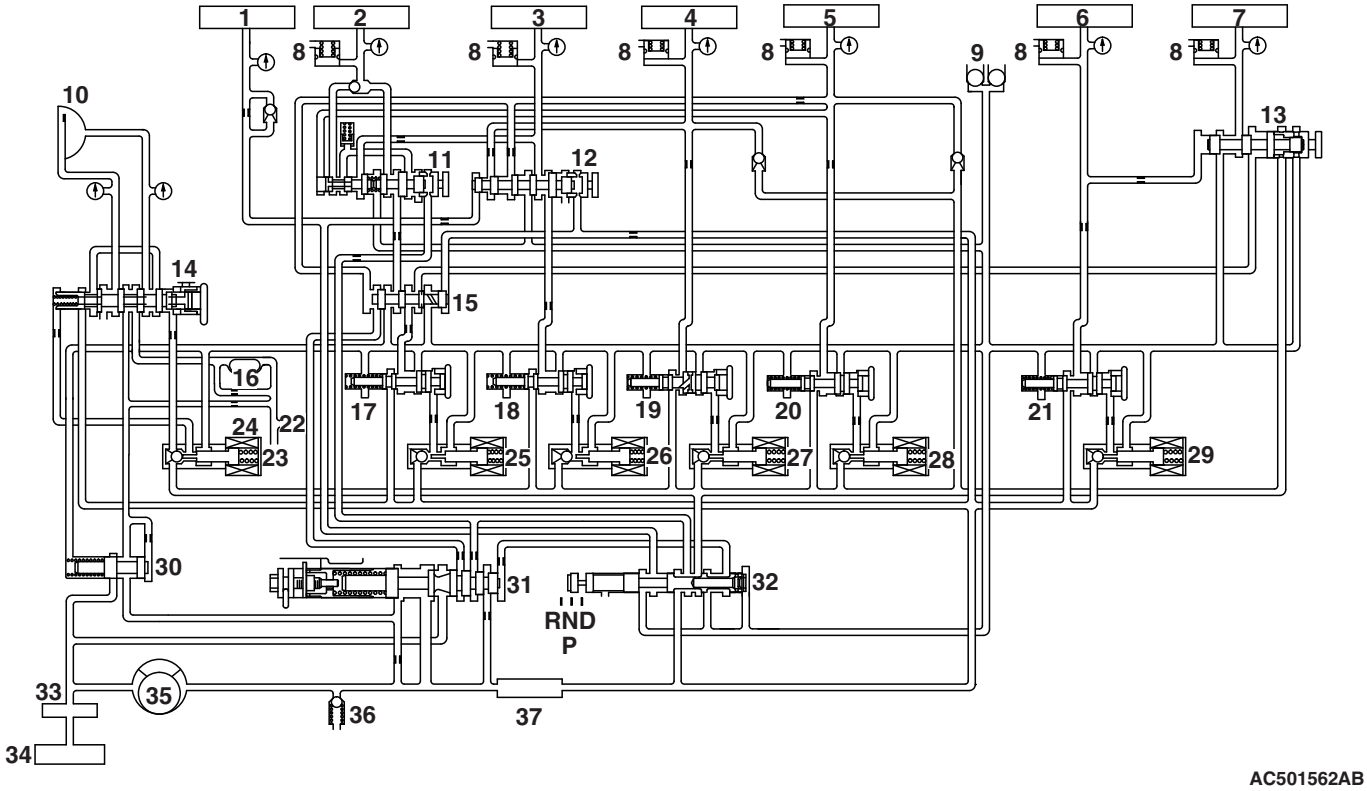

: LINE PRESSURE

: OIL PUMP SUCTION PRESSURE

: TORQUE CONVERTER CLUTCH PRESSURE

: TORQUE CONVERTER AND LUBRICATION PRESSURE

: TORQUE CONVERTER CLUTCH SOLENOID VALVE PRESSURE

1. REVERSE CLUTCH
2. LOW-REVERSE BRAKE
3. SECOND BRAKE
4. UNDERDRIVE CLUTCH
5. OVERDRIVE CLUTCH
6. REDUCTION BRAKE
7. DIRECT CLUTCH
8. ACCUMULATOR
9. CHECK BALL
10. TORQUE CONVERTER CLUTCH
11. FAIL SAFE VALVE A
12. FAIL SAFE VALVE B
13. FAIL SAFE VALVE C
14. TORQUE CONVERTER CLUTCH CONTROL VALVE
15. SWITCH VALVE
16. TRANSMISSION FLUID COOLER
17. LOW-REVERSE PRESSURE CONTROL VALVE
18. SECOND PRESSURE CONTROL VALVE
19 UNDERDRIVE PRESSURE CONTROL VALVE
20. OVERDRIVE PRESSURE CONTROL VALVE
21. REDUCTION PRESSURE CONTROL VALVE
22. LUBRICATION
23. LUBRICATION
24. TORQUE CONVERTER CLUTCH SOLENOID VALVE
25. LOW-REVERSE SOLENOID VALVE
26. SECOND SOLENOID VALVE
27. UNDERDRIVE SOLENOID VALVE
28. OVERDRIVE SOLENOID VALVE
29. REDUCTION SOLENOID VALVE
30 TORQUE CONVERTER PRESSURE CONTROL VALVE
31. REGULATOR VALVE
32. MANUAL VALVE
33. OIL FILTER
34. OIL PUMP
35. OIL STRAINER
36. RELIEF VALVE
37. OIL PAN

4TH GEAR <5A/T>

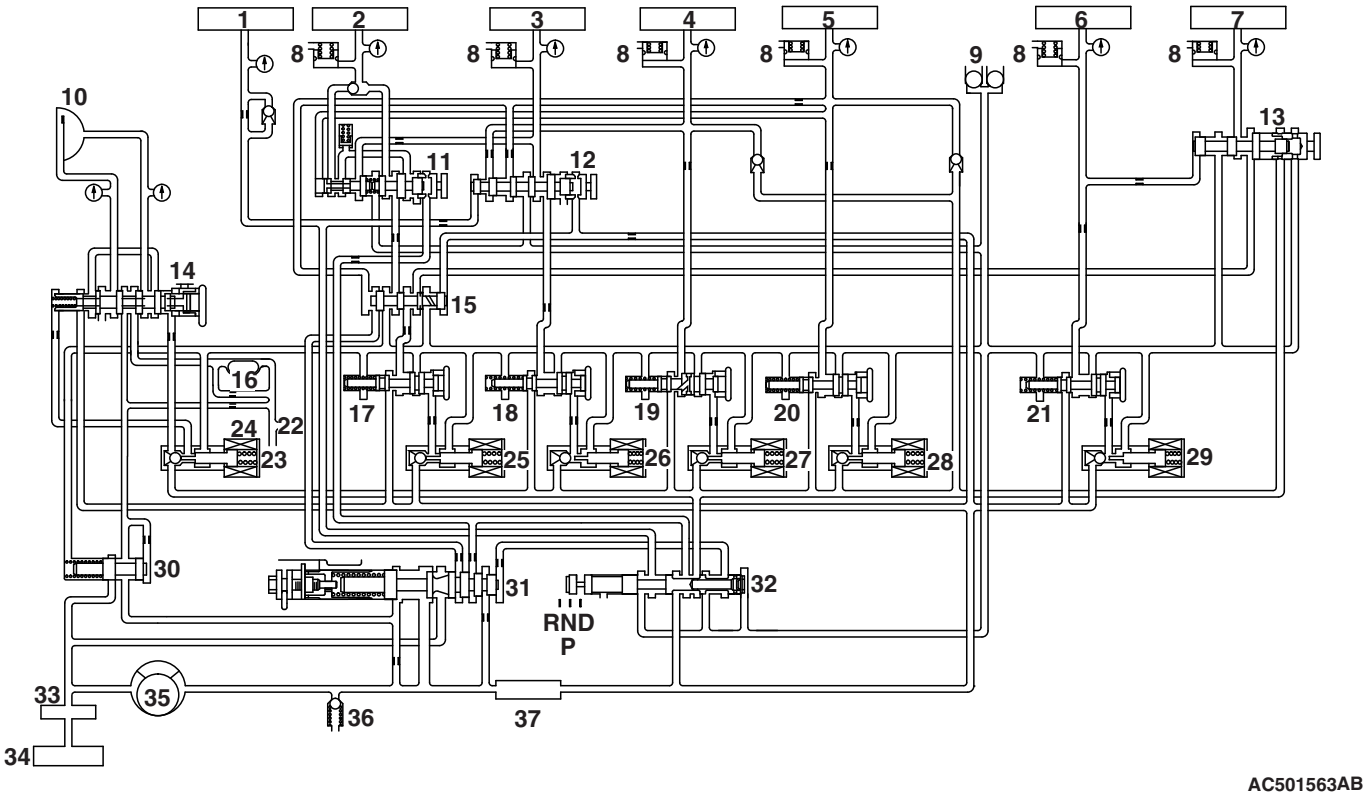

: LINE PRESSURE

: OIL PUMP SUCTION PRESSURE

: TORQUE CONVERTER CLUTCH PRESSURE

: TORQUE CONVERTER AND LUBRICATION PRESSURE

: TORQUE CONVERTER CLUTCH SOLENOID VALVE PRESSURE

1. REVERSE CLUTCH
2. LOW-REVERSE BRAKE
3. SECOND BRAKE
4. UNDERDRIVE CLUTCH
5. OVERDRIVE CLUTCH
6. REDUCTION BRAKE
7. DIRECT CLUTCH
8. ACCUMULATOR
9. CHECK BALL
10. TORQUE CONVERTER CLUTCH
11. FAIL SAFE VALVE A
12. FAIL SAFE VALVE B
13. FAIL SAFE VALVE C
14. TORQUE CONVERTER CLUTCH CONTROL VALVE
15. SWITCH VALVE
16. TRANSMISSION FLUID COOLER
17. LOW-REVERSE PRESSURE CONTROL VALVE
18. SECOND PRESSURE CONTROL VALVE
19 UNDERDRIVE PRESSURE CONTROL VALVE
20. OVERDRIVE PRESSURE CONTROL VALVE
21. REDUCTION PRESSURE CONTROL VALVE
22. LUBRICATION
23. LUBRICATION
24. TORQUE CONVERTER CLUTCH SOLENOID VALVE
25. LOW-REVERSE SOLENOID VALVE
26. SECOND SOLENOID VALVE
27. UNDERDRIVE SOLENOID VALVE
28. OVERDRIVE SOLENOID VALVE
29. REDUCTION SOLENOID VALVE
30 TORQUE CONVERTER PRESSURE CONTROL VALVE
31. REGULATOR VALVE
32. MANUAL VALVE
33. OIL FILTER
34. OIL PUMP
35. OIL STRAINER
36. RELIEF VALVE
37. OIL PAN

5TH GEAR <5A/T>

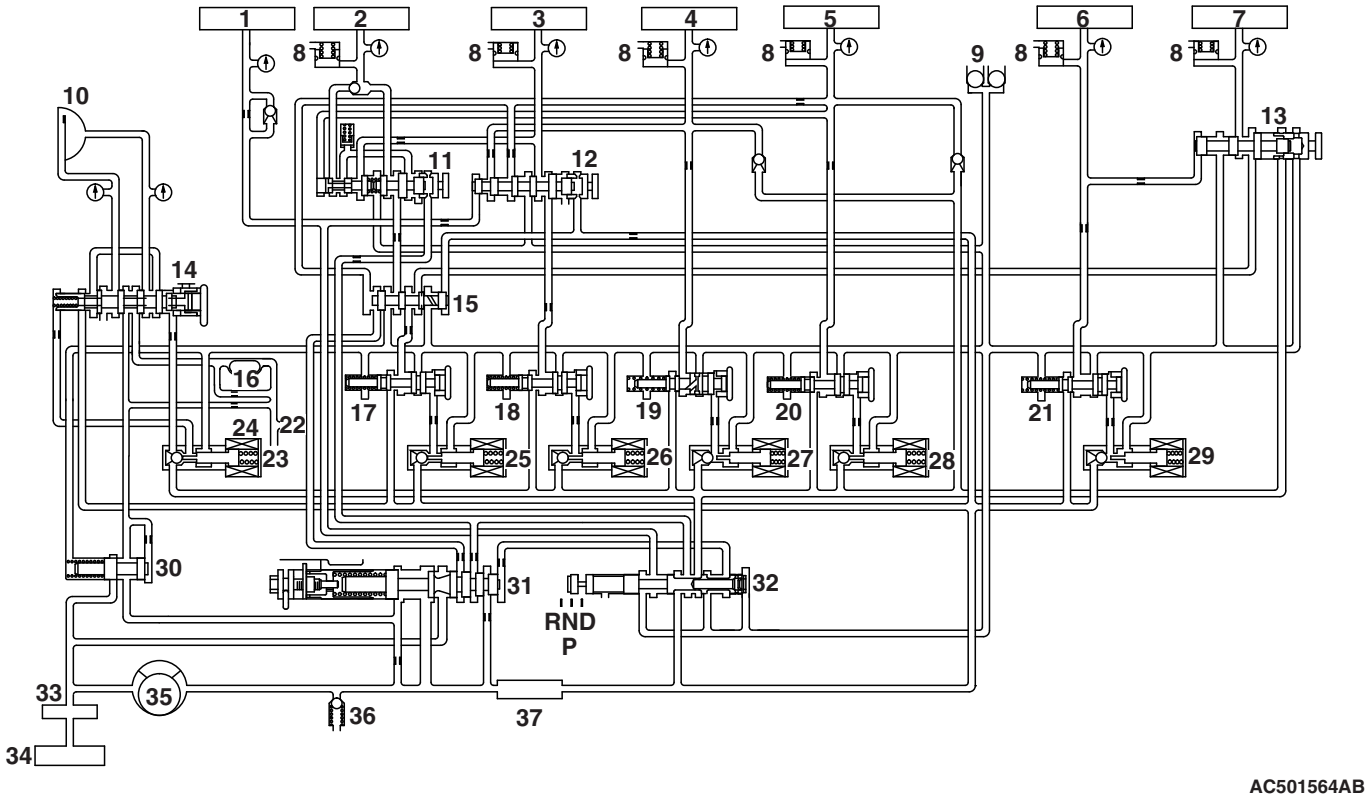

: LINE PRESSURE

: OIL PUMP SUCTION PRESSURE

: TORQUE CONVERTER CLUTCH PRESSURE

: TORQUE CONVERTER AND LUBRICATION PRESSURE

: TORQUE CONVERTER CLUTCH SOLENOID VALVE PRESSURE

1. REVERSE CLUTCH
2. LOW-REVERSE BRAKE
3. SECOND BRAKE
4. UNDERDRIVE CLUTCH
5. OVERDRIVE CLUTCH
6. REDUCTION BRAKE
7. DIRECT CLUTCH
8. ACCUMULATOR
9. CHECK BALL
10. TORQUE CONVERTER CLUTCH
11. FAIL SAFE VALVE A
12. FAIL SAFE VALVE B
13. FAIL SAFE VALVE C
14. TORQUE CONVERTER CLUTCH CONTROL VALVE
15. SWITCH VALVE
16. TRANSMISSION FLUID COOLER
17. LOW-REVERSE PRESSURE CONTROL VALVE
18. SECOND PRESSURE CONTROL VALVE
19 UNDERDRIVE PRESSURE CONTROL VALVE
20. OVERDRIVE PRESSURE CONTROL VALVE
21. REDUCTION PRESSURE CONTROL VALVE
22. LUBRICATION
23. LUBRICATION
24. TORQUE CONVERTER CLUTCH SOLENOID VALVE
25. LOW-REVERSE SOLENOID VALVE
26. SECOND SOLENOID VALVE
27. UNDERDRIVE SOLENOID VALVE
28. OVERDRIVE SOLENOID VALVE
29. REDUCTION SOLENOID VALVE
30 TORQUE CONVERTER PRESSURE CONTROL VALVE
31. REGULATOR VALVE
32. MANUAL VALVE
33. OIL FILTER
34. OIL PUMP
35. OIL STRAINER
36. RELIEF VALVE
37. OIL PAN

REVERSE GEAR <5A/T>

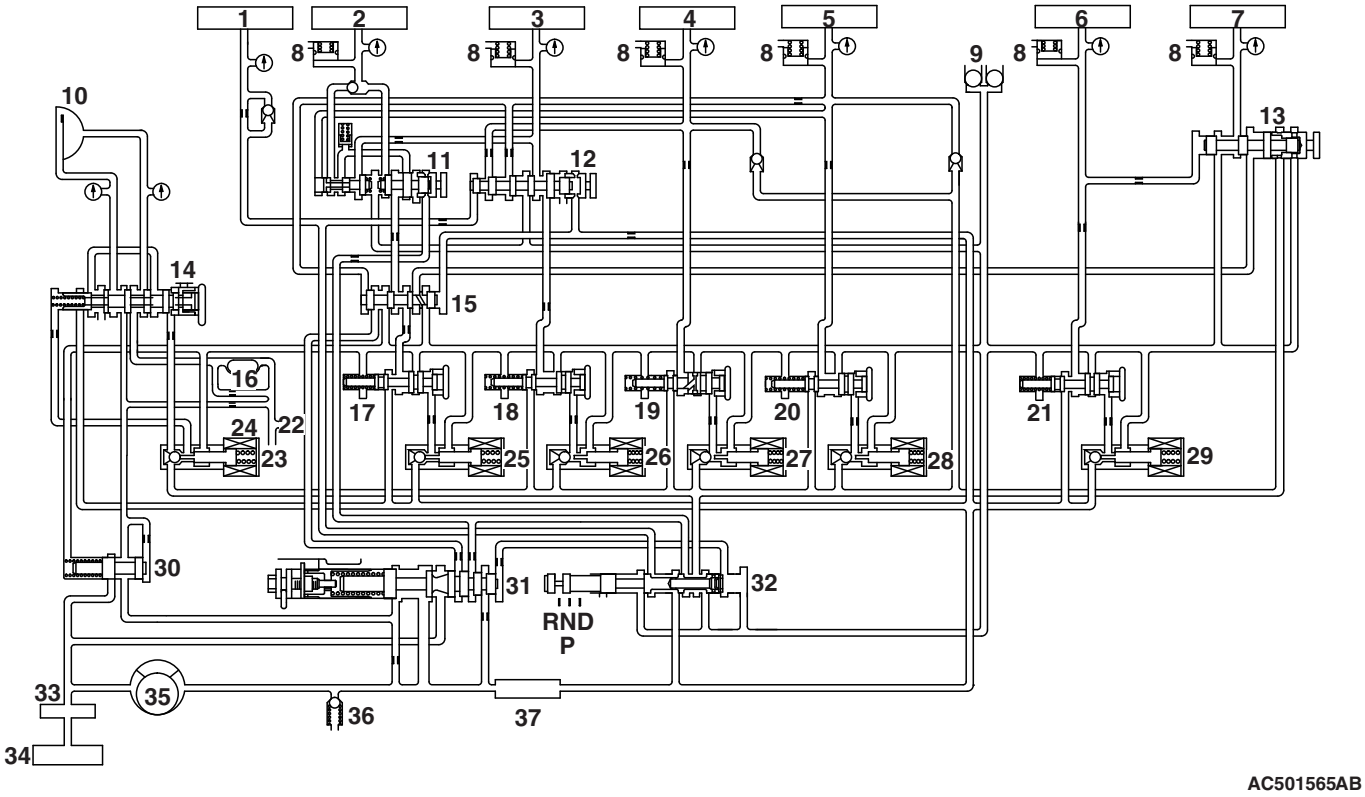

: LINE PRESSURE

: OIL PUMP SUCTION PRESSURE

: TORQUE CONVERTER CLUTCH PRESSURE

: TORQUE CONVERTER AND LUBRICATION PRESSURE

: TORQUE CONVERTER CLUTCH SOLENOID VALVE PRESSURE

1. REVERSE CLUTCH
2. LOW-REVERSE BRAKE
3. SECOND BRAKE
4. UNDERDRIVE CLUTCH
5. OVERDRIVE CLUTCH
6. REDUCTION BRAKE
7. DIRECT CLUTCH
8. ACCUMULATOR
9. CHECK BALL
10. TORQUE CONVERTER CLUTCH
11. FAIL SAFE VALVE A
12. FAIL SAFE VALVE B
13. FAIL SAFE VALVE C
14. TORQUE CONVERTER CLUTCH CONTROL VALVE
15. SWITCH VALVE
16. TRANSMISSION FLUID COOLER
17. LOW-REVERSE PRESSURE CONTROL VALVE
18. SECOND PRESSURE CONTROL VALVE
19 UNDERDRIVE PRESSURE CONTROL VALVE
20. OVERDRIVE PRESSURE CONTROL VALVE
21. REDUCTION PRESSURE CONTROL VALVE
22. LUBRICATION
23. LUBRICATION
24. TORQUE CONVERTER CLUTCH SOLENOID VALVE
25. LOW-REVERSE SOLENOID VALVE
26. SECOND SOLENOID VALVE
27. UNDERDRIVE SOLENOID VALVE
28. OVERDRIVE SOLENOID VALVE
29. REDUCTION SOLENOID VALVE
30 TORQUE CONVERTER PRESSURE CONTROL VALVE
31. REGULATOR VALVE
32. MANUAL VALVE
33. OIL FILTER
34. OIL PUMP
35. OIL STRAINER
36. RELIEF VALVE
37. OIL PAN

FAIL-SAFE (IN CASE OF FAIL-SAFE VALVE A OPERATION) <5A/T>

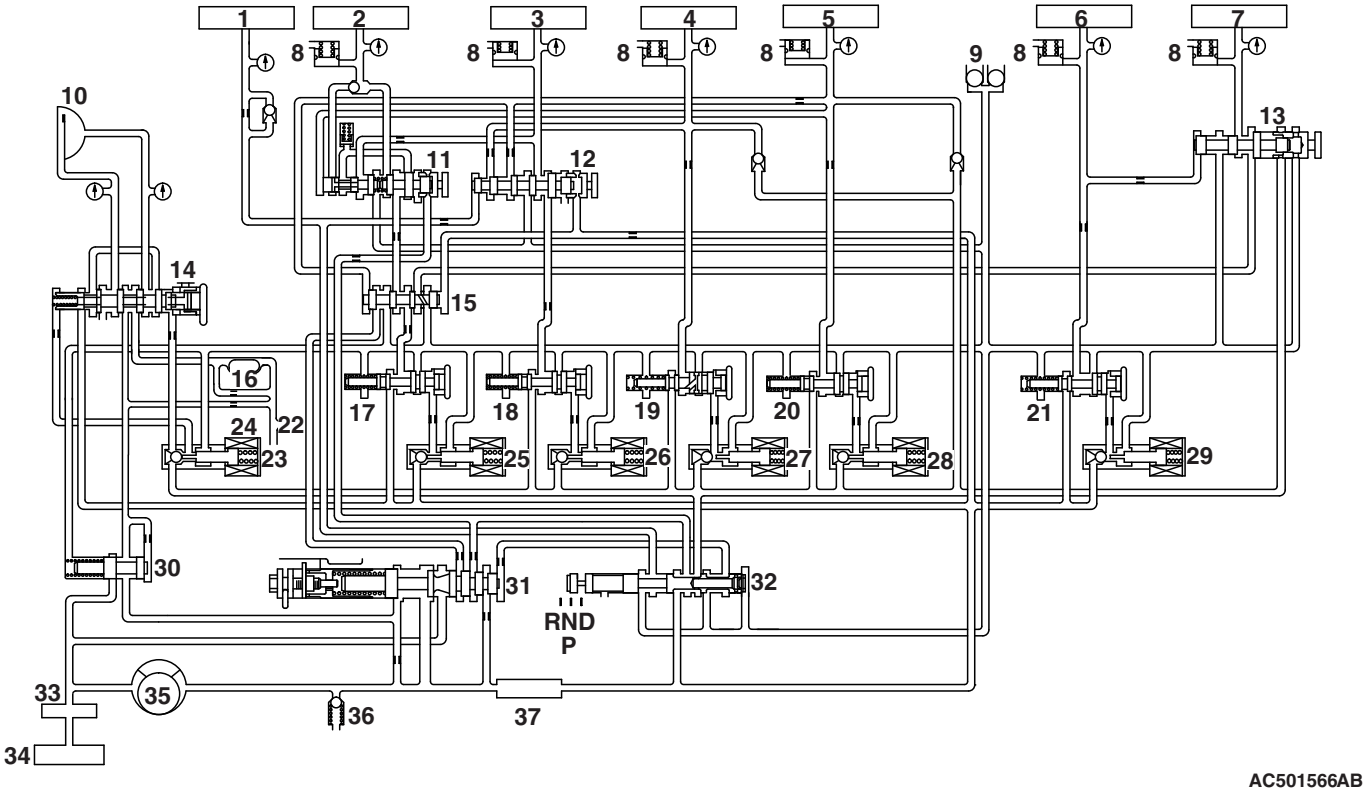

: LINE PRESSURE

: OIL PUMP SUCTION PRESSURE

: TORQUE CONVERTER CLUTCH PRESSURE

: TORQUE CONVERTER AND LUBRICATION PRESSURE

: TORQUE CONVERTER CLUTCH SOLENOID VALVE PRESSURE

1. REVERSE CLUTCH
2. LOW-REVERSE BRAKE
3. SECOND BRAKE
4. UNDERDRIVE CLUTCH
5. OVERDRIVE CLUTCH
6. REDUCTION BRAKE
7. DIRECT CLUTCH
8. ACCUMULATOR
9. CHECK BALL
10. TORQUE CONVERTER CLUTCH
11. FAIL SAFE VALVE A
12. FAIL SAFE VALVE B
13. FAIL SAFE VALVE C
14. TORQUE CONVERTER CLUTCH CONTROL VALVE
15. SWITCH VALVE
16. TRANSMISSION FLUID COOLER
17. LOW-REVERSE PRESSURE CONTROL VALVE
18. SECOND PRESSURE CONTROL VALVE
19 UNDERDRIVE PRESSURE CONTROL VALVE
20. OVERDRIVE PRESSURE CONTROL VALVE
21. REDUCTION PRESSURE CONTROL VALVE
22. LUBRICATION
23. LUBRICATION
24. TORQUE CONVERTER CLUTCH SOLENOID VALVE
25. LOW-REVERSE SOLENOID VALVE
26. SECOND SOLENOID VALVE
27. UNDERDRIVE SOLENOID VALVE
28. OVERDRIVE SOLENOID VALVE
29. REDUCTION SOLENOID VALVE
30 TORQUE CONVERTER PRESSURE CONTROL VALVE
31. REGULATOR VALVE
32. MANUAL VALVE
33. OIL FILTER
34. OIL PUMP
35. OIL STRAINER
36. RELIEF VALVE
37. OIL PAN

FAIL-SAFE (IN CASE OF FAIL-SAFE VALVE B OPERATION) <5A/T>

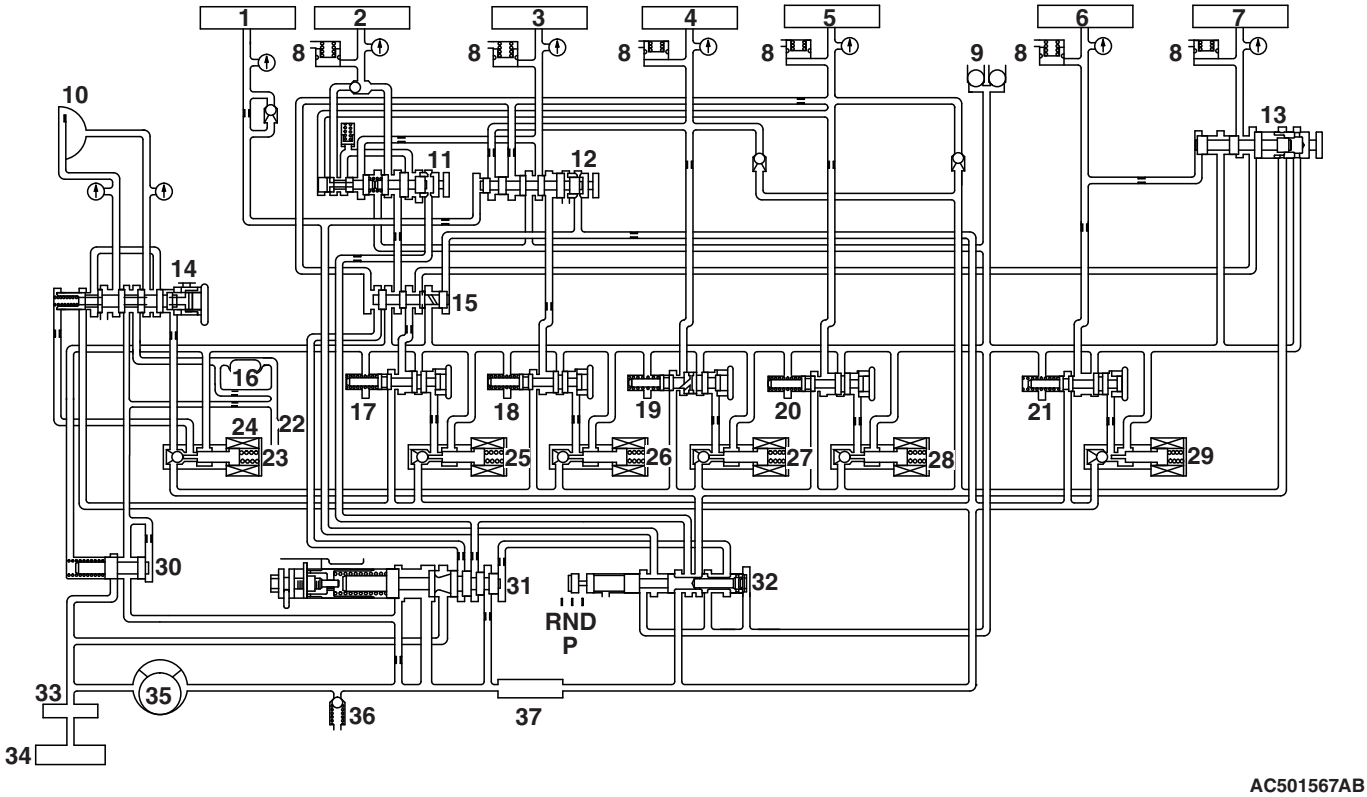

: LINE PRESSURE

: OIL PUMP SUCTION PRESSURE

: TORQUE CONVERTER CLUTCH PRESSURE

: TORQUE CONVERTER AND LUBRICATION PRESSURE

: TORQUE CONVERTER CLUTCH SOLENOID VALVE PRESSURE

1. REVERSE CLUTCH
2. LOW-REVERSE BRAKE
3. SECOND BRAKE
4. UNDERDRIVE CLUTCH
5. OVERDRIVE CLUTCH
6. REDUCTION BRAKE
7. DIRECT CLUTCH
8. ACCUMULATOR
9. CHECK BALL
10. TORQUE CONVERTER CLUTCH
11. FAIL SAFE VALVE A
12. FAIL SAFE VALVE B
13. FAIL SAFE VALVE C
14. TORQUE CONVERTER CLUTCH CONTROL VALVE
15. SWITCH VALVE
16. TRANSMISSION FLUID COOLER
17. LOW-REVERSE PRESSURE CONTROL VALVE
18. SECOND PRESSURE CONTROL VALVE
19 UNDERDRIVE PRESSURE CONTROL VALVE
20. OVERDRIVE PRESSURE CONTROL VALVE
21. REDUCTION PRESSURE CONTROL VALVE
22. LUBRICATION
23. LUBRICATION
24. TORQUE CONVERTER CLUTCH SOLENOID VALVE
25. LOW-REVERSE SOLENOID VALVE
26. SECOND SOLENOID VALVE
27. UNDERDRIVE SOLENOID VALVE
28. OVERDRIVE SOLENOID VALVE
29. REDUCTION SOLENOID VALVE
30 TORQUE CONVERTER PRESSURE CONTROL VALVE
31. REGULATOR VALVE
32. MANUAL VALVE
33. OIL FILTER
34. OIL PUMP
35. OIL STRAINER
36. RELIEF VALVE
37. OIL PAN

FAIL-SAFE (IN CASE OF FAIL-SAFE VALVE C OPERATION) <5A/T>

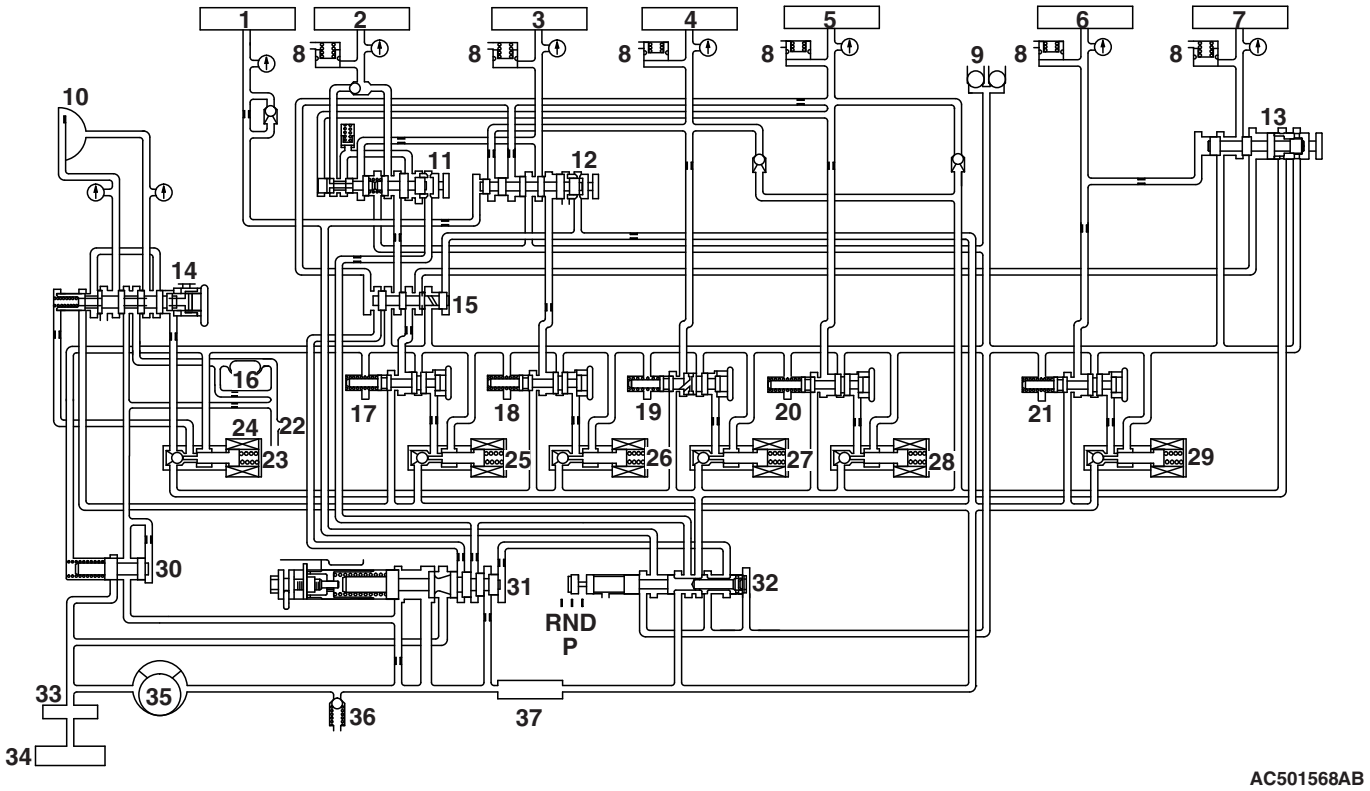

: LINE PRESSURE

: OIL PUMP SUCTION PRESSURE

: TORQUE CONVERTER CLUTCH PRESSURE

: TORQUE CONVERTER AND LUBRICATION PRESSURE

: TORQUE CONVERTER CLUTCH SOLENOID VALVE PRESSURE

1. REVERSE CLUTCH
2. LOW-REVERSE BRAKE
3. SECOND BRAKE
4. UNDERDRIVE CLUTCH
5. OVERDRIVE CLUTCH
6. REDUCTION BRAKE
7. DIRECT CLUTCH
8. ACCUMULATOR
9. CHECK BALL
10. TORQUE CONVERTER CLUTCH
11. FAIL SAFE VALVE A
12. FAIL SAFE VALVE B
13. FAIL SAFE VALVE C
14. TORQUE CONVERTER CLUTCH CONTROL VALVE
15. SWITCH VALVE
16. TRANSMISSION FLUID COOLER
17. LOW-REVERSE PRESSURE CONTROL VALVE
18. SECOND PRESSURE CONTROL VALVE
19 UNDERDRIVE PRESSURE CONTROL VALVE
20. OVERDRIVE PRESSURE CONTROL VALVE
21. REDUCTION PRESSURE CONTROL VALVE
22. LUBRICATION
23. LUBRICATION
24. TORQUE CONVERTER CLUTCH SOLENOID VALVE
25. LOW-REVERSE SOLENOID VALVE
26. SECOND SOLENOID VALVE
27. UNDERDRIVE SOLENOID VALVE
28. OVERDRIVE SOLENOID VALVE
29. REDUCTION SOLENOID VALVE
30 TORQUE CONVERTER PRESSURE CONTROL VALVE
31. REGULATOR VALVE
32. MANUAL VALVE
33. OIL FILTER
34. OIL PUMP
35. OIL STRAINER
36. RELIEF VALVE
37. OIL PAN

LINE PRESSURE ADJUSTMENT

M1231001700468

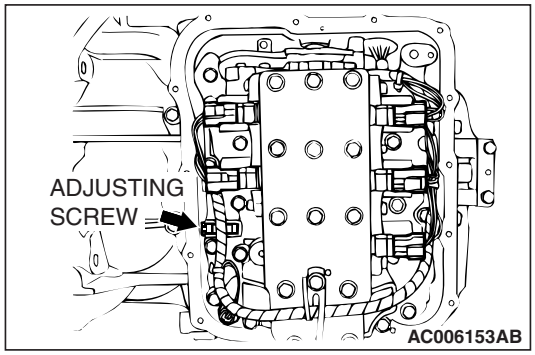

1. Drain the transmission fluid.

   NOTE: The hydraulic pressure test must be performed before attempting any adjustments.
2. Remove the valve body cover.
3. Turn the adjusting screw shown in the illustration to adjust the line pressure to the standard value. The pressure increases when the screw is turned counterclockwise.

   NOTE: When adjusting the line pressure, adjust to the middle of the standard value range.

   Standard value: 0.98 – 1.05 MPa (142 – 152 psi)
4. Install the valve body cover. Pour in one quart transmission fluid.
5. Repeat the hydraulic pressure test. (Refer to P.23A-37). Readjust the line pressure if necessary.

DIAGNOSTIC TROUBLE CODE CHART

M1231007900589

⚠ CAUTION

During diagnosis, a DTC code associated with other system may be set when the ignition switch is turned on with connector(s) disconnected. On completion, confirm all systems for DTC code(s). If DTC code(s) are set, erase them all.

A/T DTC NO.	MFI DTC NO.	DIAGNOSIS ITEM		REFERENCE PAGE
P1606	–	EEPROM malfunction		P.23A-67
P1763	P0713	Transmission fluid temperature sensor system	Open circuit	P.23A-68
P1764	P0712		Short circuit	P.23A-82
P1766	P0715	Input shaft speed sensor system	Short circuit/open circuit	P.23A-92
P1767	P0720	Output shaft speed sensor system	Short circuit/open circuit	P.23A-113
P1769	–	Stoplight switch system		P.23A-134
P1770	P0705	Transmission range switch system	Open circuit	P.23A-143
P1771			Short circuit	P.23A-172
P1773	P0753	Low-reverse solenoid valve system	Short circuit/open circuit	P.23A-187
P1774	P0758	Underdrive solenoid valve system	Short circuit/open circuit	P.23A-201
P1775	P0763	Second solenoid valve system	Short circuit/open circuit	P.23A-213
P1776	P0768	Overdrive solenoid valve system	Short circuit/open circuit	P.23A-225
P1777	P0773	Reduction solenoid valve system <5A/T>	Short circuit/open circuit	P.23A-237
P1778	P0743	Torque converter clutch solenoid valve system	Short circuit/open circuit	P.23A-249
P1779	P0731	1st gear incorrect ratio		P.23A-260
P1780	P0732	2nd gear incorrect ratio		P.23A-260
P1781	P0733	3rd gear incorrect ratio		P.23A-260
P1782	P0734	4th gear incorrect ratio		P.23A-260
P1783	P0735	5th gear incorrect ratio <5A/T>		P.23A-260
P1784	P0736	Reverse gear incorrect ratio		P.23A-260
P1786	P0741	Torque converter clutch system	Defective system	P.23A-277
P1787	P0742		Clutch stuck on	P.23A-282
P1788	P1751	A/T control relay system	Short circuit to ground/open circuit	P.23A-286

SYMPTOM CHART

M1231008000686

⚠ CAUTION

During diagnosis, a DTC code associated with other system may be set when the ignition switch is turned on with connector(s) disconnected. On completion, confirm all systems for DTC code(s). If DTC code(s) are set, erase them all.

SYMPTOM		INSPECTION PROCEDURE NO.	REFERENCE PAGE
Communication with scan tool is not possible	Communication with the PCM only is impossible	-	Group 13A <2.4L Engine>, Symptom Procedures P.13A-1057. Group 13B <3.8L Engine>, Symptom Procedures P.13B-1097.
Driving impossible	Engine does not start	1	P.23A-301
	Does not move forward	2	P.23A-304
	Does not move backward	3	P.23A-307
	Does not move (forward and backward)	4	P.23A-309
Malfunction when moving selector into gear	Engine stalls when moving selector lever from "N" to "D" or "N" to "R"	5	P.23A-311
	Shift shock when shifting from "N" to "D" and long delay	6	P.23A-312
	Shift shock when shifting from "N" to "R" and long delay	7	P.23A-316
	Shift shock when shifting from "N" to "D" and "N" to "R" and long delay	8	P.23A-319
Malfunction when shifting	Shift shock and slipping	9	P.23A-320
Does not shift properly	Early or late shifting in all gears	10	P.23A-323
	Early or late shifting in some gears	11	P.23A-327
Does not shift	No diagnostic trouble codes	12	P.23A-328
Malfunction while driving	Poor acceleration	13	P.23A-333
	Vibration	14	P.23A-335
Shift switch assembly system		15	P.23A-338
Shift position indicator light system		16	P.23A-360

DIAGNOSTIC TROUBLE CODE PROCEDURES

DTC P1606: EEPROM Malfunction

DTC SET CONDITIONS

DTC P1606 will be set when abnormal conditions are encountered in the A/T side area of EEPROM.

TROUBLESHOOTING HINTS (THE MOST LIKELY CAUSES FOR THIS CODE TO BE SET ARE:)

- Malfunction of the PCM

DIAGNOSIS

Required Special Tools:

- MB991958: Scan tool (M.U.T.-III Sub Assembly)
  - MB991824: V.C.I.
  - MB991827: USB Cable
  - MB991910: Main Harness A

STEP 1. Using scan tool MB991958, read the diagnostic trouble code (DTC)

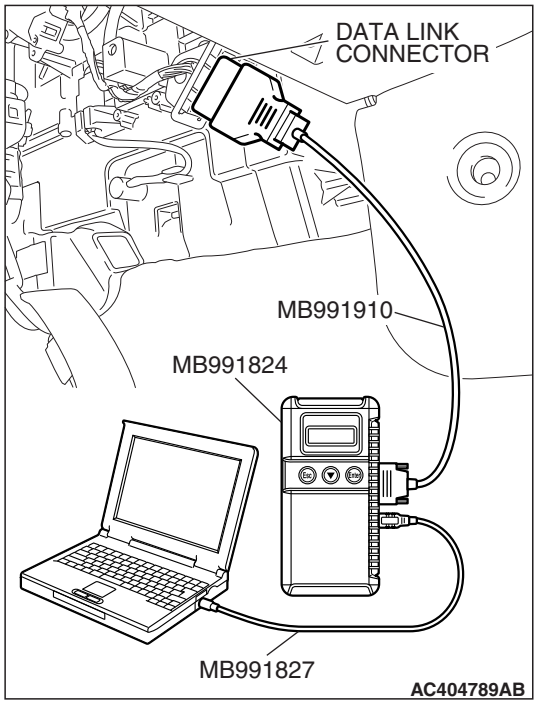

⚠ CAUTION

To prevent damage to scan tool MB991958, always turn the ignition switch to the "LOCK"(OFF) position before connecting or disconnecting scan tool MB991958.

(1) Connect scan tool MB991958 to the data link connector.
(2) Turn the ignition switch to the "ON" position.
(3) After the DTC has been deleted, read the DTC again.
(4) Turn the ignition switch to the "LOCK"(OFF) position.

Q: Is DTC P1606 set?

YES : Replace the PCM. When the PCM is replaced, register the encrypted code. Refer to GROUP 54A, Encrypted Code Registration Criteria Table P.54A-19.

NO : It can be assumed that this malfunction is intermittent. Refer to GROUP 00, How to Use Troubleshooting/Inspection Service Points – How to Cope with Intermittent Malfunctions P.00-14.

DTC P1763 (P0713): Transmission Fluid Temperature Sensor System (Open Circuit)

Transmission Fluid Temperature Sensor System Circuit

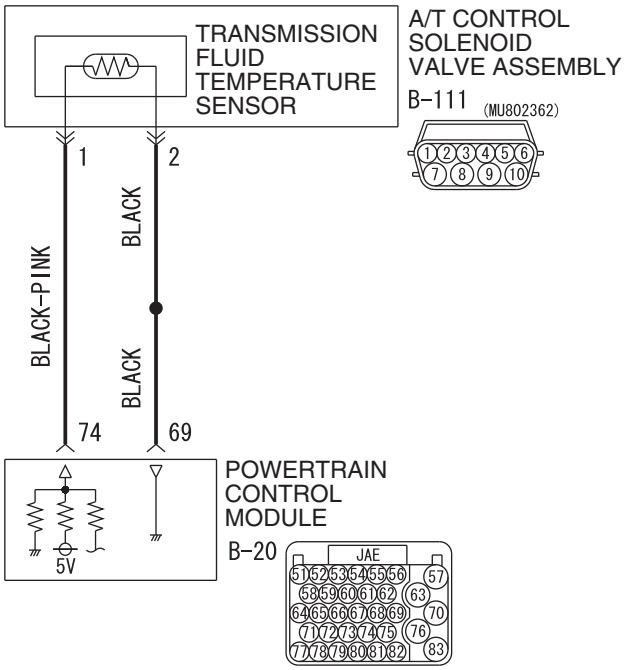

W6P23M005A
AC406420AB

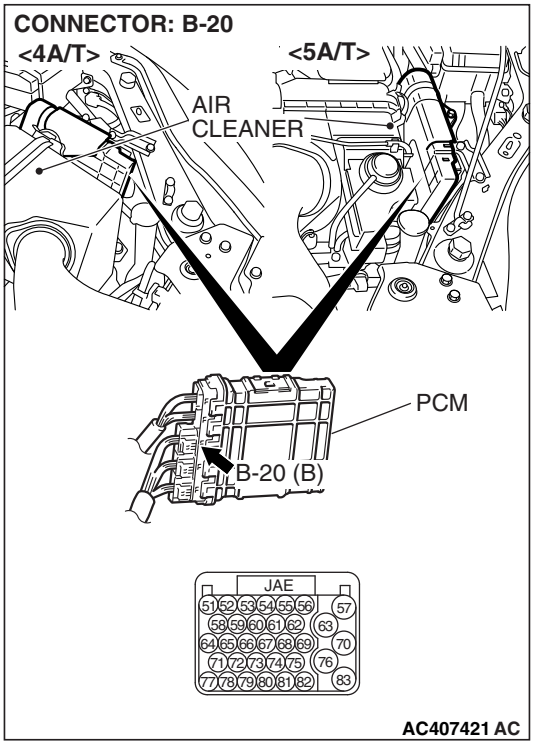

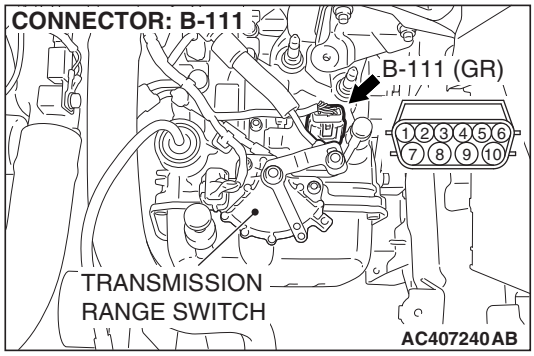

CIRCUIT OPERATION

- The PCM (terminal 74) applies 5 volts to the transmission fluid temperature sensor output terminal (terminal 1).
- The transmission fluid temperature sensor circuit is grounded to the PCM (terminal 69).
- When the transmission fluid temperature is cold, the transmission fluid temperature sensor resistance is high. When the transmission fluid temperature is hot, the transmission fluid temperature sensor resistance is low.

DESCRIPTIONS OF MONITOR METHODS

- If transmission fluid temperature is below specified value even after test driving for more than the specified period, the PCM judges that the transmission fluid temperature sensor has a failure.

MONITOR EXECUTION

- Continuous

MONITOR EXECUTION CONDITIONS (OTHER MONITOR AND SENSOR)

Other Monitor (There is no temporary DTC stored in memory for the item monitored below)

- DTC P1767 (P0720): Output shaft speed sensor malfunction

Sensor (The sensor below is determined to be normal)

- Output shaft speed sensor

LOGIC FLOW CHARTS (Monitor Sequence)

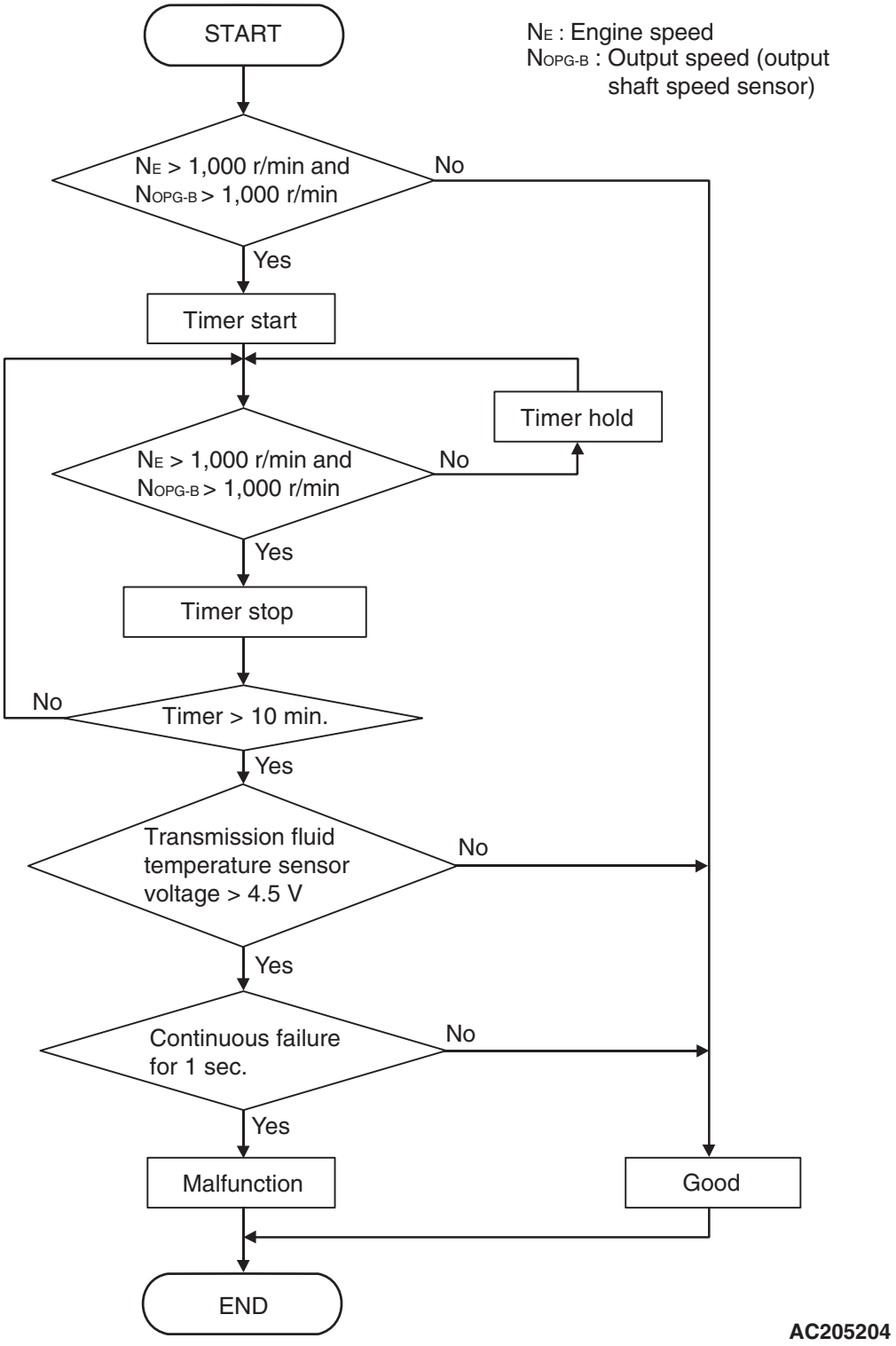

DTC SET CONDITIONS

Check Conditions

- Engine speed: 1,000 r/min or more.
- Output speed: 1,000 r/min or more.
- Accumulated time in above condition: 10 minutes.

Judgement Criteria

- Transmission fluid temperature sensor voltage: 4.5 volts or more. (1 second)

OBD-II DRIVE CYCLE PATTERN

Start the engine, drive at 60 km/h (37 mph) or more for 15 minutes in total.

TSB Revision

TROUBLESHOOTING HINTS (THE MOST LIKELY CAUSES FOR THIS CODE TO BE SET ARE:)

- Malfunction of the transmission fluid temperature sensor circuit
- Damaged harness or connector
- Malfunction of the PCM

DIAGNOSIS

Required Special Tools:

- MB991958: Scan Tool (M.U.T.-III Sub Assembly)
  - MB991824: V.C.I.
  - MB991827: M.U.T.-III USB Cable
  - MB991910: M.U.T.-III Main Harness A

STEP 1. Using scan tool MB991958, check data list item 7: Transmission Fluid Temperature Sensor.

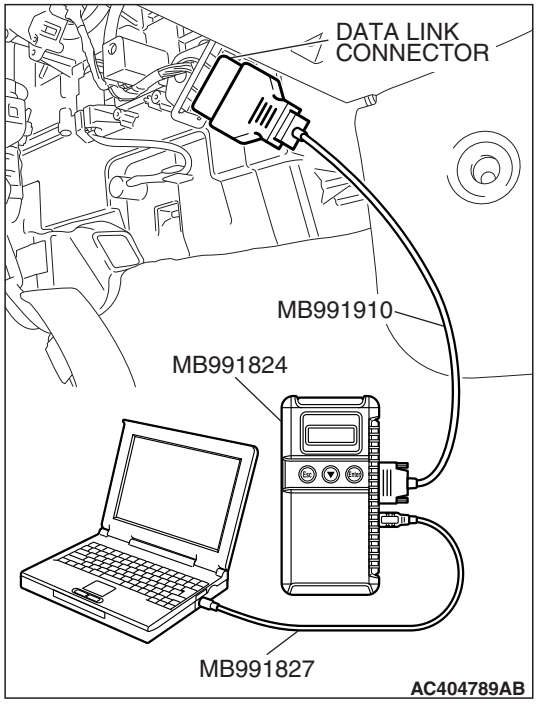

⚠ CAUTION

To prevent damage to scan tool MB991958, always turn the ignition switch to the "LOCK" (OFF) position before connecting or disconnecting scan tool MB991958.

(1) Connect scan tool MB991958 to the data link connector.
(2) Start the engine.
(3) Set scan tool MB991958 to the data reading mode.
- Item 7: Transmission Fluid Temperature Sensor.
  - When the engine is cool: Almost equal to the ambient temperature (atmospheric temperature)

    NOTE: Set scan tool MB991958 to the data reading mode for item number 5, Intake Air Temperature (IAT) Sensor and note the temperature measurement. When the engine is cool, the temperature should be almost equal to the ambient temperature (atmospheric temperature), and the IAT sensor measurement should be approximately the same as the Transmission Fluid Temperature Sensor.
  - When the engine is warm: 70 – 80°C (158 – 176°F).

(4) Turn the ignition switch to the "LOCK" (OFF) position.

Q: Is the sensor operating properly?

YES : It can be assumed that this malfunction is intermittent. Refer to GROUP 00, How to Use Troubleshooting/Inspection Service Points – How to Cope with Intermittent Malfunction P.00-14.

NO : Go to Step 2.

STEP 2. Measure the sensor output voltage at the A/T control solenoid valve assembly connector B-111 by backprobing.

(1) Do not disconnect connector B-111.
(2) Turn the ignition switch to the "ON" position.

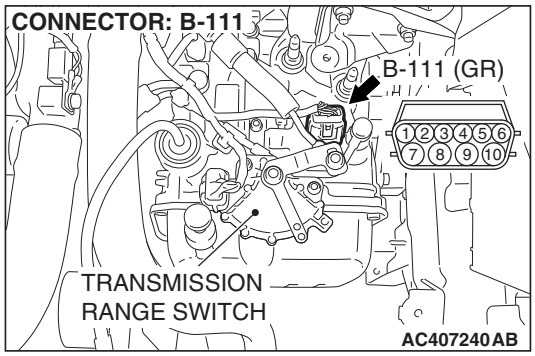

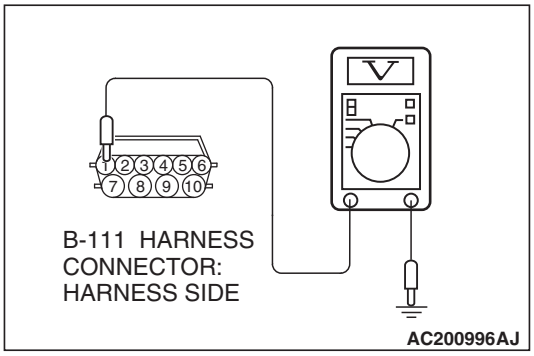

(3) Measure the voltage between terminal 1 and ground by backprobing.
- When transmission fluid temperature is 20°C (68°F), voltage should measure between 3.8 and 4.0 volts.
- When transmission fluid temperature is 40°C (104°F), voltage should measure between 3.2 and 3.4 volts.
- When transmission fluid temperature is 80°C (176°F), voltage should measure between 1.7 and 1.9 volts.

(4) Turn the ignition switch to the "LOCK" (OFF) position.

Q: Is the measured voltage within the specified range?

YES : Go to Step 6.
NO : Go to Step 3.

STEP 3. Measure the ground voltage at the A/T control solenoid valve assembly connector B-111 by backprobing.

(1) Do not disconnect connector B-111.
(2) Turn the ignition switch to the "ON" position.

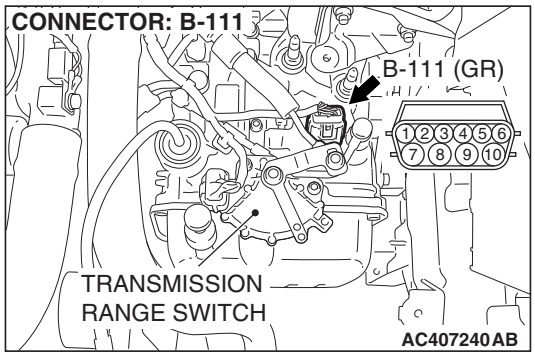

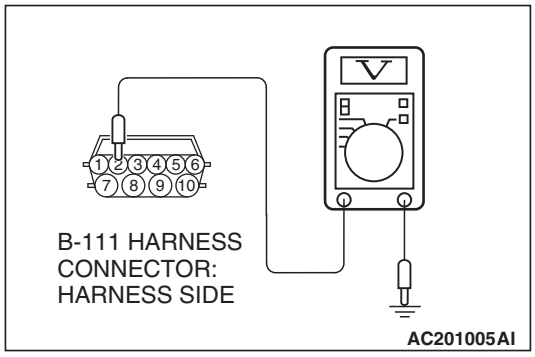

(3) Measure the voltage between terminal 2 and ground by backprobing.
- The voltage should measure 0.5 volt or less.

(4) Turn the ignition switch to the "LOCK" (OFF) position.

Q: Is the measured voltage 0.5 volt or less?

YES : Go to Step 4.
NO : Go to Step 7.

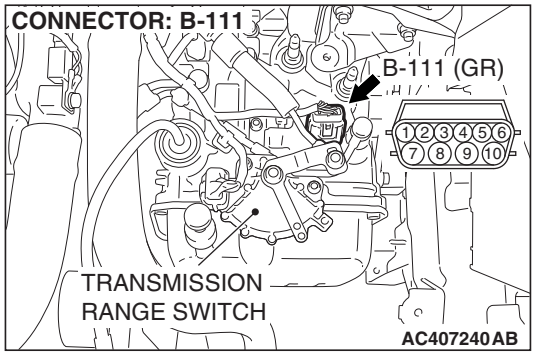

STEP 4. Check the sensor output voltage at A/T control solenoid valve assembly connector B-111.

(1) Disconnect connector B-111 and measure at the harness side.

(2) Turn the ignition switch to the "ON" position.

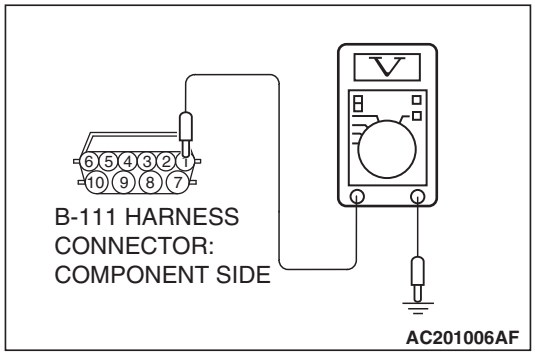

(3) Measure the voltage between terminal 1 and ground.
- The voltage should measure between 4.5 and 4.9 volts.

(4) Turn the ignition switch to the "LOCK" (OFF) position.

Q: Is the measured voltage between 4.5 and 4.9 volts?

YES : Go to Step 5.
NO : Go to Step 9.

STEP 5. Check the transmission fluid temperature sensor at A/T control solenoid valve assembly connector B-111.

(1) Disconnect connector B-111 and measure at the sensor side.

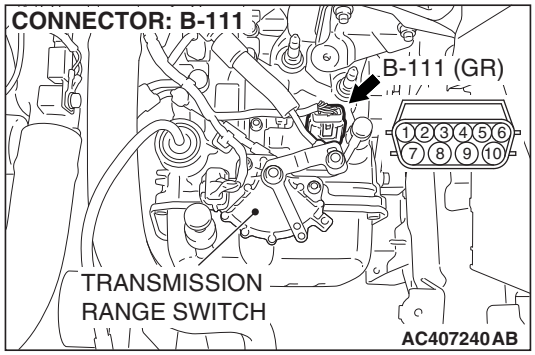

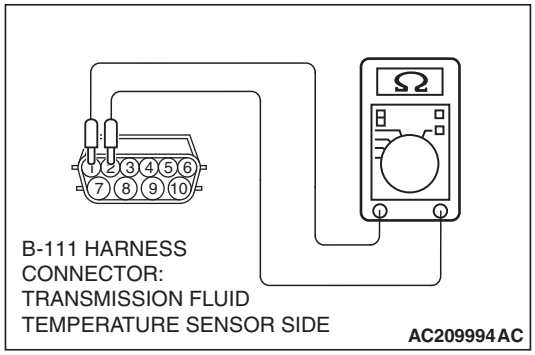

(2) Measure the resistance between terminal 1 and 2.
- When transmission fluid temperature is 0°C (32°F), resistance should be between 16.7 and 20.5 kΩ.
- When transmission fluid temperature is 20°C (68°F), resistance should be between 7.3 and 8.9 kΩ.
- When transmission fluid temperature is 40°C (104°F), resistance should be between 3.4 and 4.2 kΩ.
- When transmission fluid temperature is 60°C (140°F), resistance should be between 1.9 and 2.2 kΩ.
- When transmission fluid temperature is 80°C (176°F), resistance should be between 1.0 and 1.2 kΩ.
- When transmission fluid temperature is 100°C (212°F), resistance should be between 0.57 and 0.69 kΩ.

Q: Is the measured resistance within the specified range?

YES : Go to Step 6.

NO : Replace the transmission fluid temperature sensor. Refer to GROUP 23B, P.23B-8 Transaxle <4A/T> or Refer to GROUP 23C, P.23C-8 Transaxle <5A/T>.

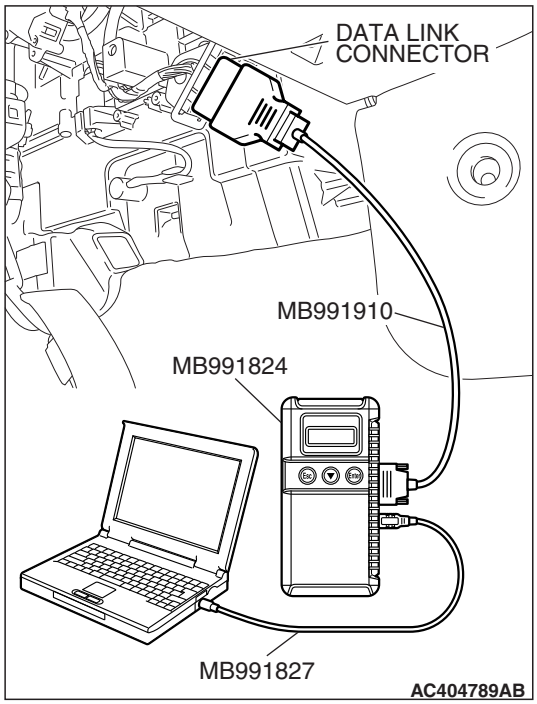

STEP 6. Using scan tool MB991958, check data list item 7: Transmission Fluid Temperature Sensor.

⚠ CAUTION

To prevent damage to scan tool MB991958, always turn the ignition switch to the "LOCK" (OFF) position before connecting or disconnecting scan tool MB991958.

(1) Connect scan tool MB991958 to the data link connector.
(2) Start the engine.
(3) Set scan tool MB991958 to the data reading mode.
- Item 7: Transmission Fluid Temperature Sensor.
  - When the engine is cool: Almost equal to the ambient temperature (atmospheric temperature)

    NOTE: Set scan tool MB991958 to data reading mode for item number 13, Intake Air Temperature (IAT) Sensor and note the temperature measurement. When the engine is cool, the temperature should be almost equal to the ambient temperature (atmospheric temperature), and the IAT sensor measurement should be approximately the same as the Transmission Fluid Temperature Sensor.
  - When the engine is warm: 70 – 80°C (158 – 176°F).

(4) Turn the ignition switch to the "LOCK" (OFF) position.

Q: Is the sensor operating properly?

YES : It can be assumed that this malfunction is intermittent. Refer to GROUP 00, How to Use Troubleshooting/Inspection Service Points – How to Cope with Intermittent Malfunction P.00-14.

NO : Replace the PCM. When the PCM is replaced, register the encrypted code. Refer to GROUP 54A, Encrypted Code Registration Criteria Table P.54A-19.

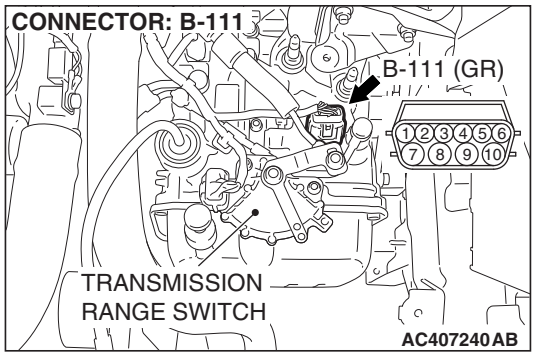

STEP 7. Check A/T control solenoid valve assembly connector B-111 for loose, corroded or damaged terminals, or terminals pushed back in the connector.

Q: Are the connector and terminals in good condition?

YES : Go to Step 8.

NO : Repair or replace the damaged components. Refer to GROUP 00E, Harness Connector Inspection P.00E-2.

STEP 8. Measure the resistance of the ground circuit at A/T control solenoid valve assembly connector B-111.

(1) Disconnect connector B-111 and measure at the harness side.

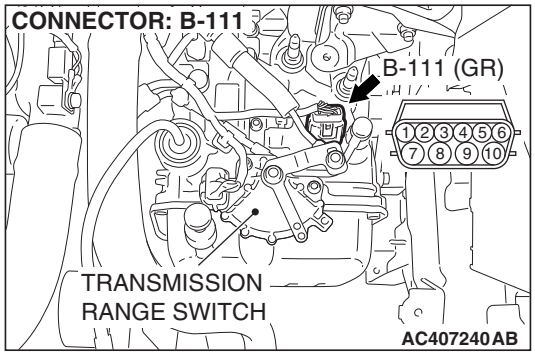

(2) Measure the resistance between terminal 2 and ground.
- The resistance should measure less than 2 ohms.

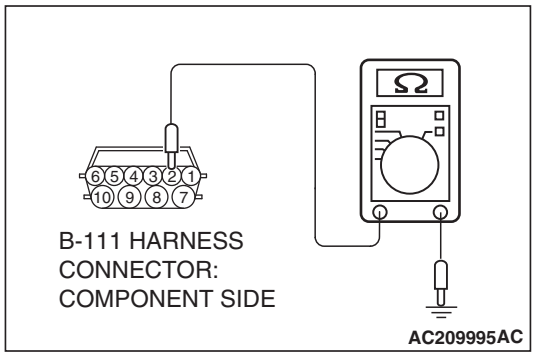

Q: Is the resistance less than 2 ohms?

YES : Go to Step 5.
NO : Go to Step 12.

STEP 9. Measure the sensor output voltage at PCM connector B-20 by using check harness special tool MB991923 .

(1) Disconnect all the connectors from the PCM.

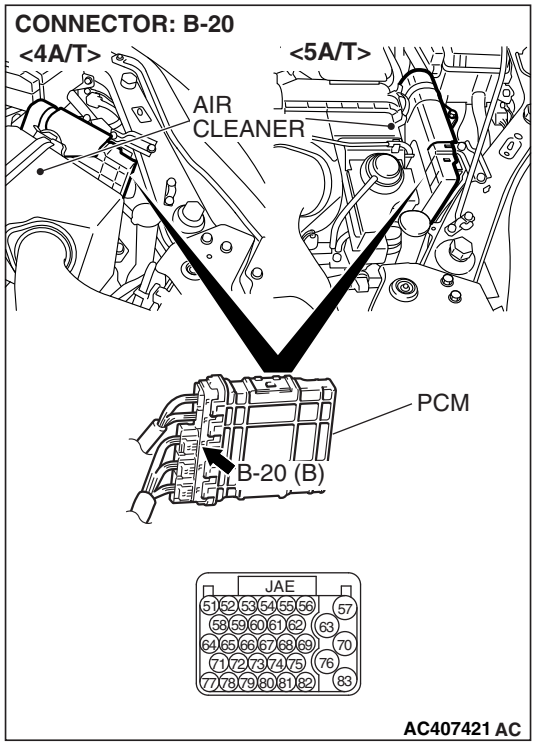

(2) Connect special tool MB991923 (check harness) between the PCM and the body-side harness connector.
(3) Turn the ignition switch to the "ON" position.

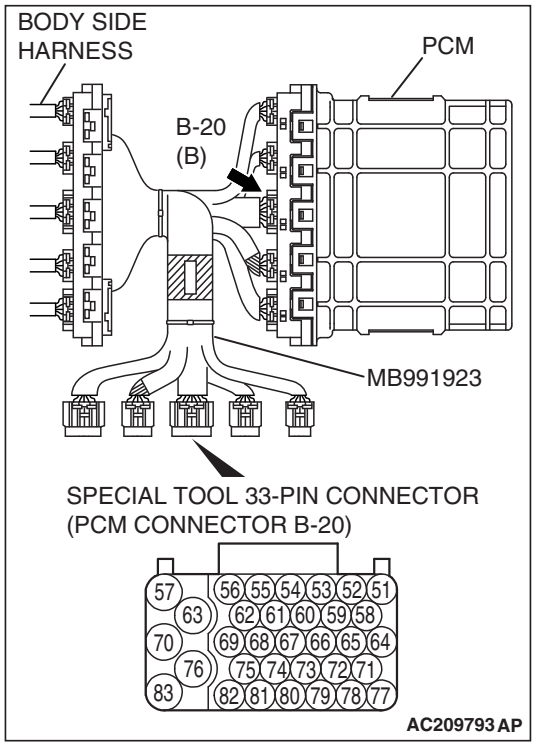

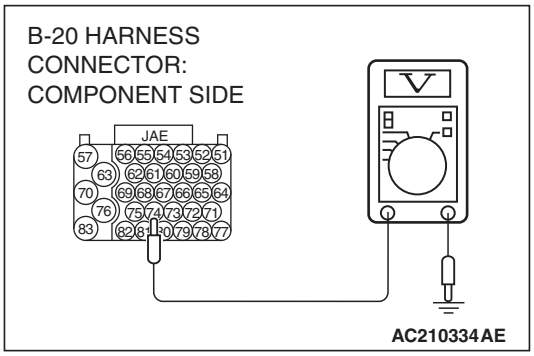

(4) Measure the voltage between terminal 74 and ground.
- When transmission fluid temperature is 20°C (68°F), voltage should measure between 3.8 and 4.0 volts.
- When transmission fluid temperature is 40°C (104°F), voltage should measure between 3.2 and 3.4 volts.
- When transmission fluid temperature is 80°C (176°F), voltage should measure between 1.7 and 1.9 volts.

(5) Turn the ignition switch to the "LOCK" (OFF) position.

Q: Is the measured voltage within the specified range?

YES : Go to Step 6.
NO : Go to Step 10.

STEP 10. Check PCM connector B-20 for loose, corroded or damaged terminals, or terminals pushed back in the connector.

Q: Are the connector and terminals in good condition?

YES : Go to Step 11.
NO : Repair or replace the damaged components. Refer to GROUP 00E, Harness Connector Inspection P.00E-2.

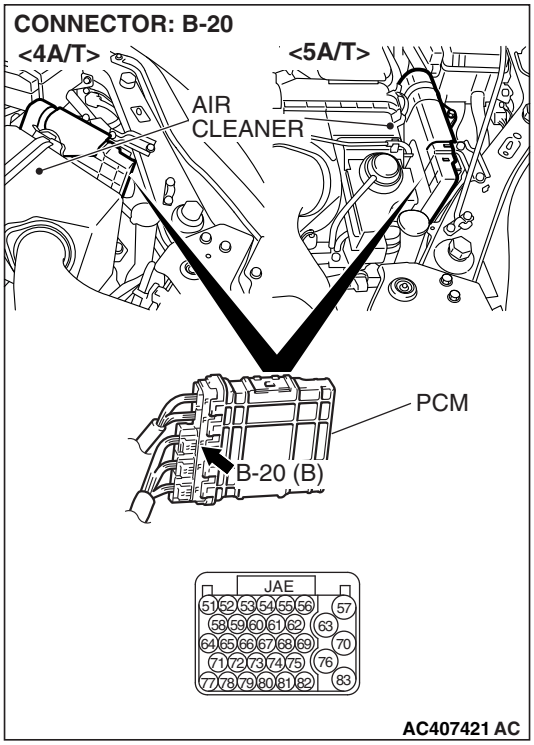

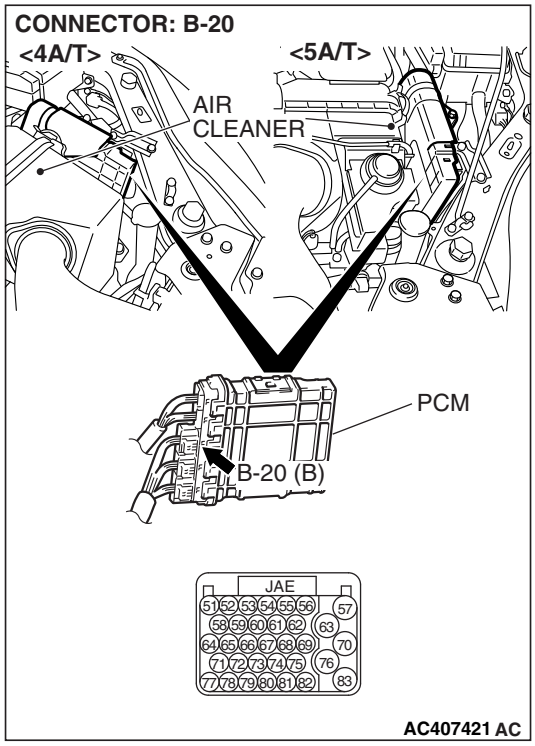

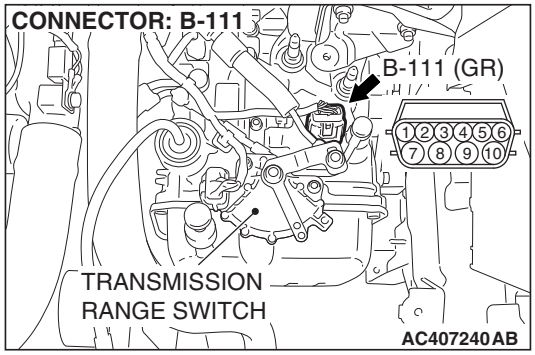

STEP 11. Check the harness for open circuit or short circuit to ground between PCM connector B-20 terminal 74 and A/T control solenoid valve connector B-111 terminal 1.

Q: Is the harness wire in good condition?

YES : Go to Step 6.

NO : Repair or replace the harness wire.

STEP 12. Measure the ground voltage at PCM connector B-20 by using check harness special tool MB991923.

(1) Disconnect all the connectors from the PCM.

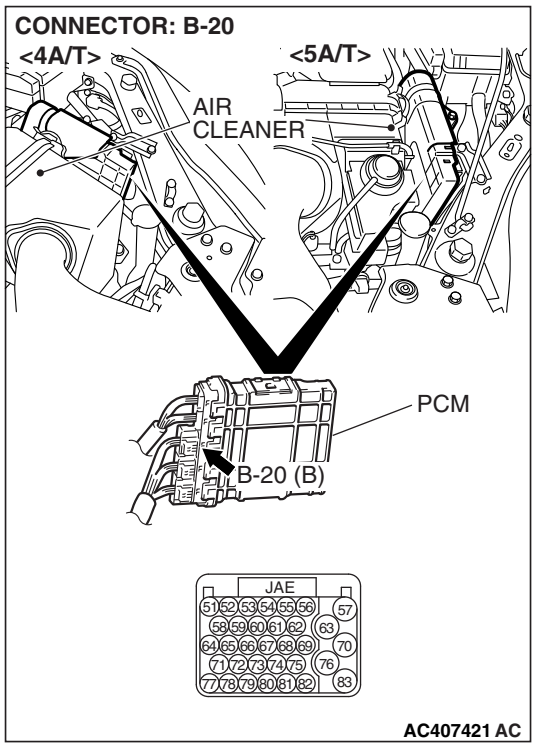

(2) Connect special tool MB991923 (check harness) between the PCM and the body-side harness connector.

(3) Turn the ignition switch to the "ON" position.

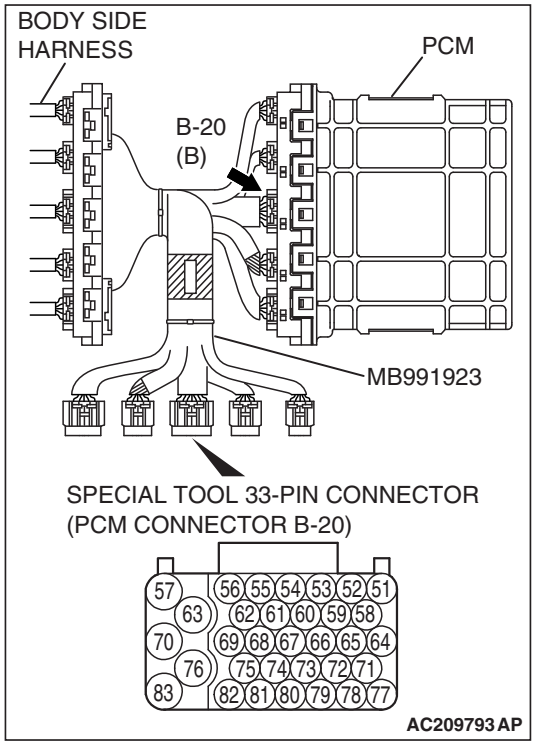

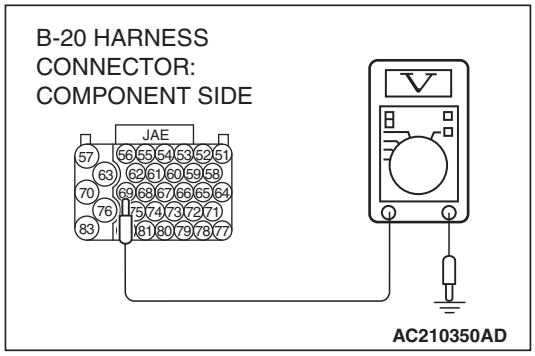

(4) Measure the voltage between terminal 69 and ground.
- Voltage should measure 0.5 volt or less.

(5) Turn the ignition switch to the "LOCK" (OFF) position.

Q: Is the measured voltage within the specified range?

YES : Go to Step 13.
NO : Go to Step 14.

STEP 13. Check the harness for open circuit or damage between PCM connector B-20 terminal 69 and A/T control solenoid valve connector B-111 terminal 2.

Q: Is the harness wire in good condition?

YES : Go to Step 6.
NO : Repair or replace the harness wire.

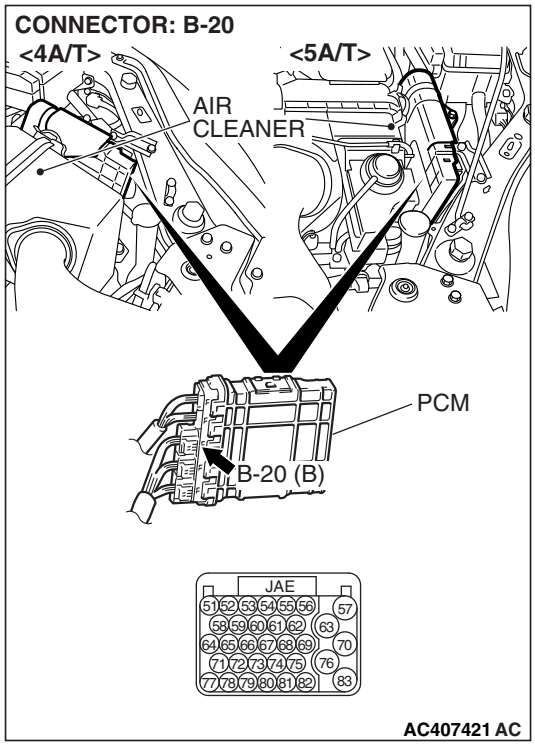

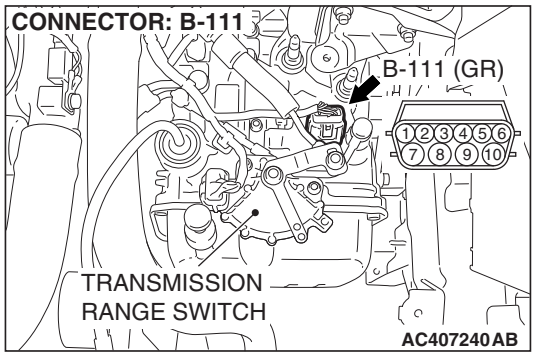

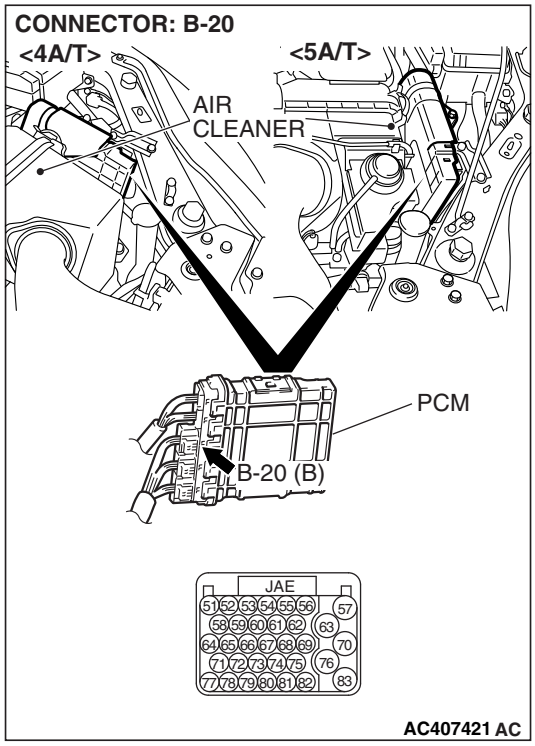

STEP 14. Check PCM connector B-20 for loose, corroded or damaged terminals, or terminals pushed back in the connector.

Q: Are the connector and terminals in good condition?

YES : Go to Step 6.

NO : Repair or replace the damaged components. Refer to GROUP 00E, Harness Connector Inspection P.00E-2.

DTC P1764 (P0712): Transmission Fluid Temperature Sensor System (Short Circuit)

TRANSMISSION FLUID TEMPERATURE SENSOR SYSTEM CIRCUIT

Refer to P.23A-68.

CIRCUIT OPERATION

Refer to P.23A-68.

DESCRIPTIONS OF MONITOR METHODS

- If transmission fluid temperature equals or exceeds specified value, PCM judges that transmission fluid temperature sensor has a failure.

MONITOR EXECUTION

- Continuous

MONITOR EXECUTION CONDITIONS (OTHER MONITOR AND SENSOR)

Other Monitor (There is no temporary DTC stored in memory for the item monitored below)

- Not applicable

Sensor (The sensor below is determined to be normal)

- Not applicable

LOGIC FLOW CHARTS (Monitor Sequence)

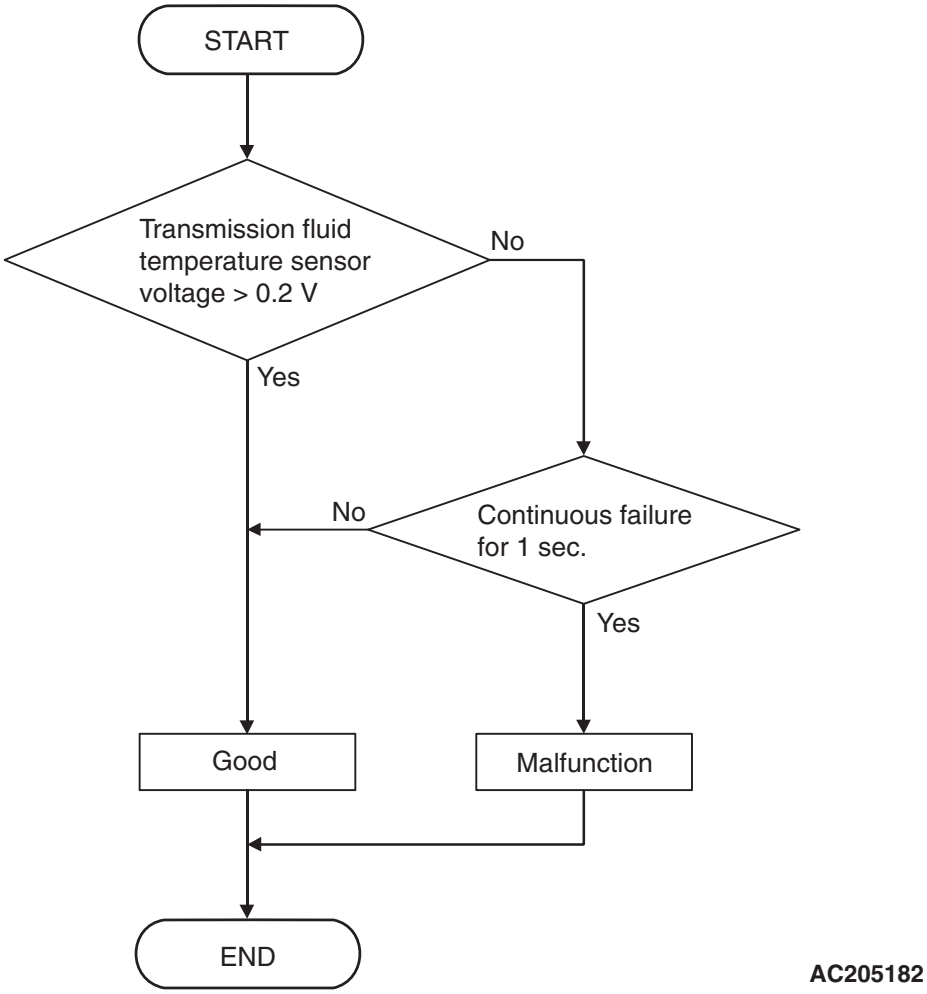

DTC SET CONDITIONS

Check Conditions, Judgement Criteria

- Transmission fluid temperature sensor voltage: 0.2 volt or less. (1 second)

OBD-II DRIVE CYCLE PATTERN

Start the engine, keep the vehicle stopped in "P" range for 5 seconds.

TROUBLESHOOTING HINTS (THE MOST LIKELY CAUSES FOR THIS CODE TO BE SET ARE:)

- Malfunction of the transmission fluid temperature sensor circuit
- Damaged harness or connector
- Malfunction of the PCM

DIAGNOSIS

Required Special Tools:

- MB991958: Scan Tool (M.U.T.-III Sub Assembly)
  - MB991824: V.C.I.
  - MB991827: M.U.T.-III USB Cable
  - MB991910: M.U.T.-III Main Harness A

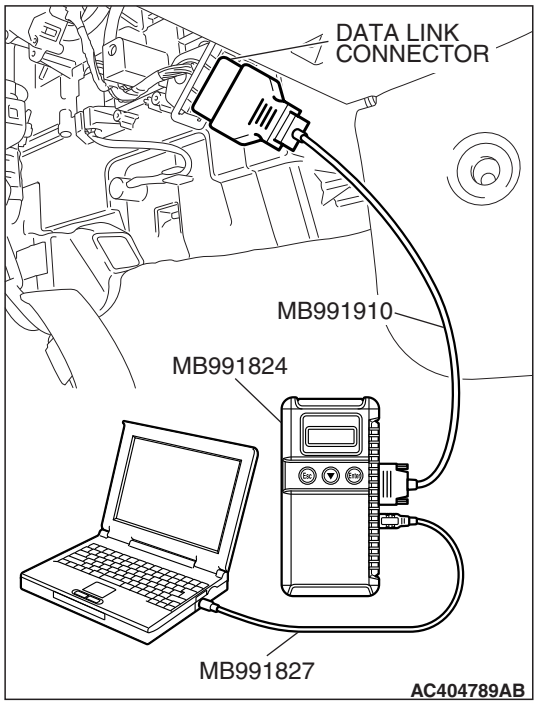

STEP 1. Using scan tool MB991958, check data list item 7: Transmission Fluid Temperature Sensor.

⚠ CAUTION

To prevent damage to scan tool MB991958, always turn the ignition switch to the "LOCK" (OFF) position before connecting or disconnecting scan tool MB991958.

(1) Connect scan tool MB991958 to the data link connector.
(2) Start the engine.
(3) Set scan tool MB991958 to the data reading mode.
- Item 7: Transmission Fluid Temperature Sensor.
  - When the engine is cool: Almost equal to the ambient temperature (atmospheric temperature)

    NOTE: Set scan tool MB991958 to the data reading mode for item number 5, Intake Air Temperature (IAT) Sensor and note the temperature measurement. When the engine is cool, the temperature should be almost equal to the ambient temperature (atmospheric temperature), and the IAT sensor measurement should be approximately the same as the Transmission Fluid Temperature Sensor.
  - When the engine is warm: 70 – 80°C (158 – 176°F).

(4) Turn the ignition switch to the "LOCK" (OFF) position.

Q: Is the sensor operating properly?

YES : It can be assumed that this malfunction is intermittent. Refer to GROUP 00, How to Use Troubleshooting/Inspection Service Points – How to Cope with Intermittent Malfunction P.00-14.

NO : Go to Step 2.

STEP 2. Measure the sensor output voltage at the A/T control solenoid valve assembly connector B-111 by backprobing.

(1) Do not disconnect connector B-111.
(2) Turn the ignition switch to the "ON" position.

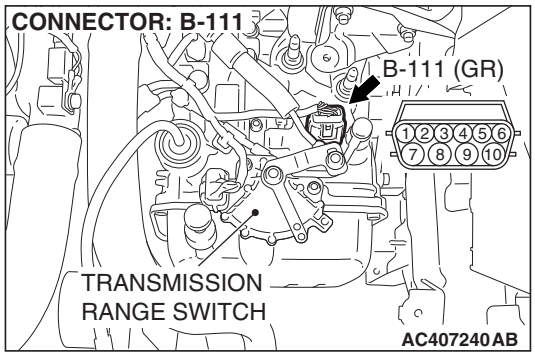

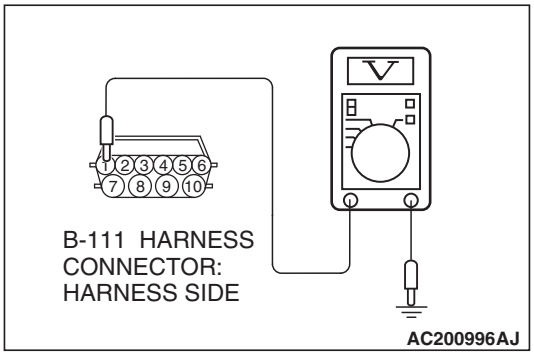

(3) Measure the voltage between terminal 1 and ground by backprobing.
- When transmission fluid temperature is 20°C (68°F), voltage should measure between 3.8 and 4.0 volts.
- When transmission fluid temperature is 40°C (104°F), voltage should measure between 3.2 and 3.4 volts.
- When transmission fluid temperature is 80°C (176°F), voltage should measure between 1.7 and 1.9 volts.

(4) Turn the ignition switch to the "LOCK" (OFF) position.

Q: Is the measured voltage within the specified range?

YES : Go to Step 6.
NO : Go to Step 3.

STEP 3. Check A/T control solenoid valve assembly connector B-111 for loose, corroded or damaged terminals, or terminals pushed back in the connector.

Q: Are the connector and terminals in good condition?

YES : Go to Step 4.
NO : Repair or replace the damaged components. Refer to GROUP 00E, Harness Connector Inspection P.00E-2.

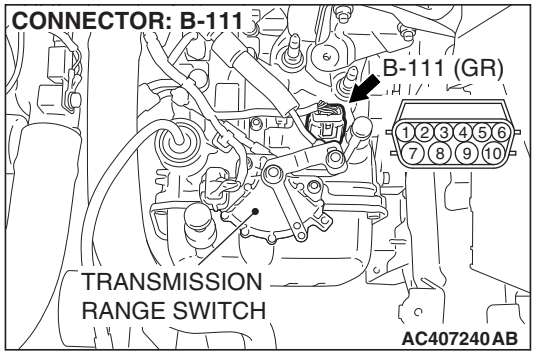

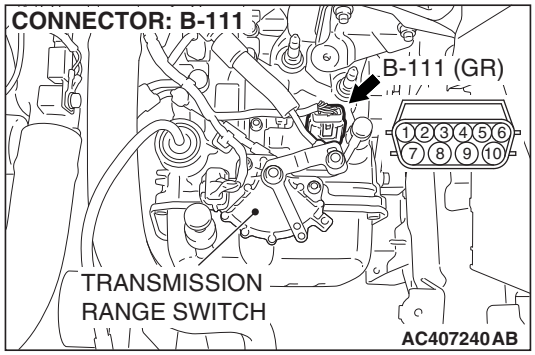

STEP 4. Check the sensor output voltage at A/T control solenoid valve assembly connector B-111.

(1) Disconnect connector B-111 and measure at the harness side.

(2) Turn the ignition switch to the "ON" position.

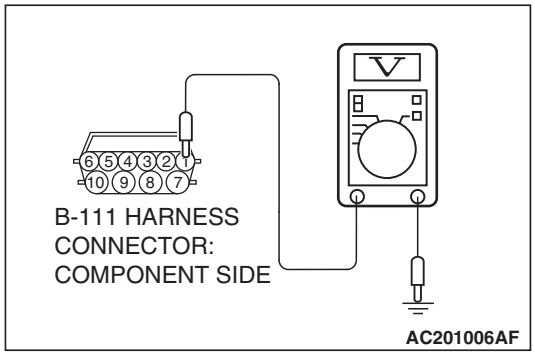

(3) Measure the voltage between terminal 1 and ground.
- The voltage should measure between 4.5 and 4.9 volts.

(4) Turn the ignition switch to the "LOCK" (OFF) position.

Q: Is the measured voltage between 4.5 and 4.9 volts?

YES : Go to Step 5.
NO : Go to Step 7.

STEP 5. Check the transmission fluid temperature sensor at A/T control solenoid valve assembly connector B-111.

(1) Disconnect connector B-111 and measure at the sensor side.

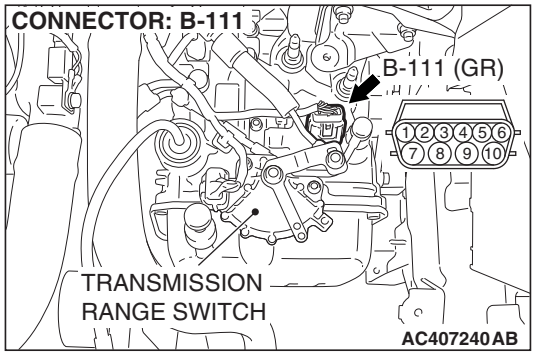

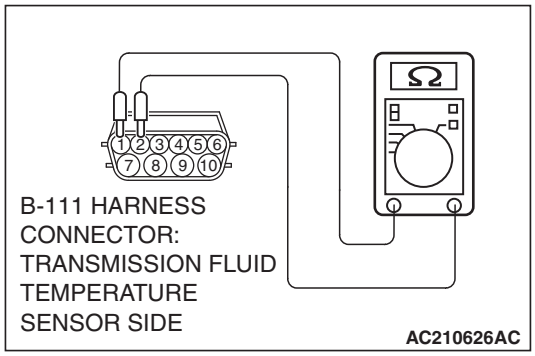

(2) Measure the resistance between terminal 1 and 2.
- When transmission fluid temperature is 0°C (32°F), resistance should be between 16.7 and 20.5 kΩ.
- When transmission fluid temperature is 20°C (68°F), resistance should be between 7.3 and 8.9 kΩ.
- When transmission fluid temperature is 40°C (104°F), resistance should be between 3.4 and 4.2 kΩ.
- When transmission fluid temperature is 60°C (140°F), resistance should be between 1.9 and 2.2 kΩ.
- When transmission fluid temperature is 80°C (176°F), resistance should be between 1.0 and 1.2 kΩ.
- When transmission fluid temperature is 100°C (212°F), resistance should be between 0.57 and 0.69 kΩ.

Q: Is the measured resistance within the specified range?

YES : Go to Step 6.

NO : Replace the transmission fluid temperature sensor. Refer to GROUP 23B, P.23B-8 Transaxle <4A/T> or Refer to GROUP 23C, P.23C-8 Transaxle <5A/T>.

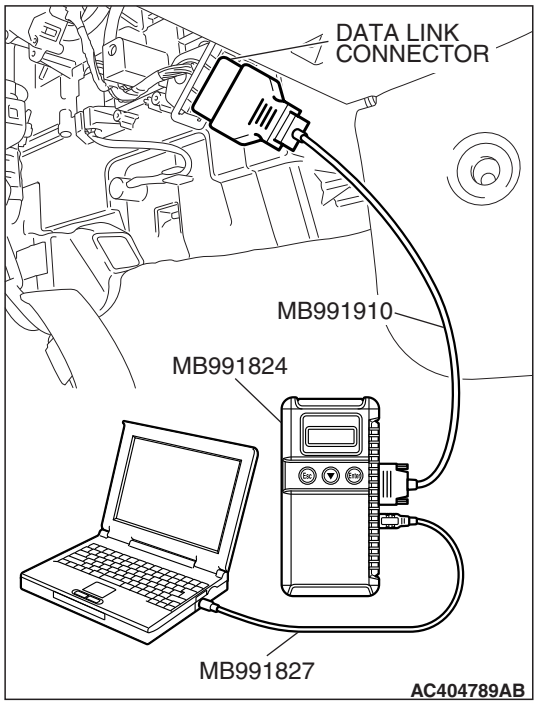

STEP 6. Using scan tool MB991958, check data list item 7: Transmission Fluid Temperature Sensor.

⚠ CAUTION

To prevent damage to scan tool MB991958, always turn the ignition switch to the "LOCK" (OFF) position before connecting or disconnecting scan tool MB991958.

(1) Connect scan tool MB991958 to the data link connector.
(2) Start the engine.
(3) Set scan tool MB991958 to the data reading mode.
- Item 7: Transmission Fluid Temperature Sensor.
  - When the engine is cool: Almost equal to the ambient temperature (atmospheric temperature)

    NOTE: Set scan tool MB991958 to the data reading mode for item number 13, Intake Air Temperature (IAT) Sensor and note the temperature measurement. When the engine is cool, the temperature should be almost equal to the ambient temperature (atmospheric temperature), and the IAT sensor measurement should be approximately the same as the Transmission Fluid Temperature Sensor.
  - When the engine is warm: 70 – 80°C (158 – 176°F).

(4) Turn the ignition switch to the "LOCK" (OFF) position.

Q: Is the sensor operating properly?

YES : It can be assumed that this malfunction is intermittent. Refer to GROUP 00, How to Use Troubleshooting/Inspection Service Points – How to Cope with Intermittent Malfunction P.00-14.

NO : Replace the PCM. When the PCM is replaced, register the encrypted code. Refer to GROUP 54A, Encrypted Code Registration Criteria Table P.54A-19.

STEP 7. Measure the sensor output voltage at PCM connector B-20 by using check harness special tool MB991923.

(1) Disconnect all the connectors from the PCM.

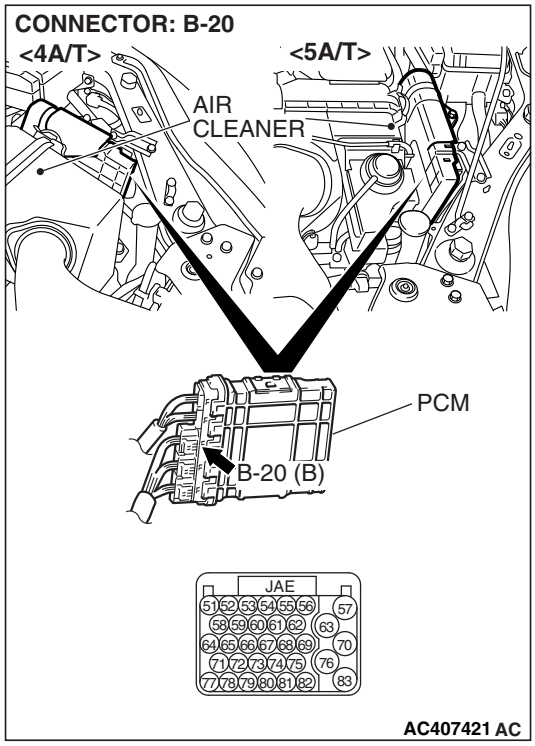

(2) Connect special tool MB991923 (check harness) between the PCM and the body-side harness connector.
(3) Turn the ignition switch to the "ON" position.

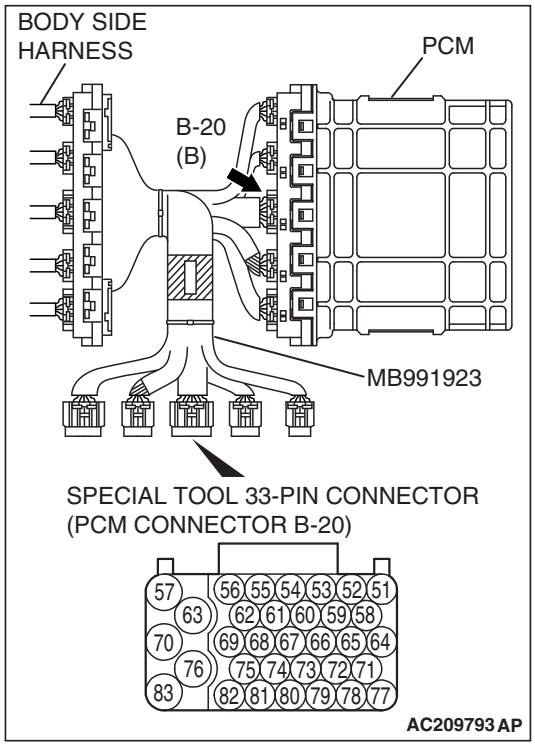

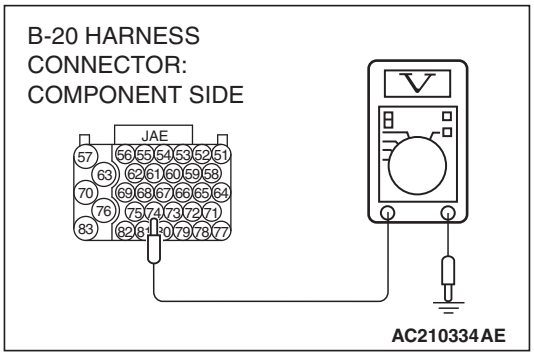

(4) Measure the voltage between terminal 74 and ground.
- When transmission fluid temperature is 20°C (68°F), voltage should measure between 3.8 and 4.0 volts.
- When transmission fluid temperature is 40°C (104°F), voltage should measure between 3.2 and 3.4 volts.
- When transmission fluid temperature is 80°C (176°F), voltage should measure between 1.7 and 1.9 volts.

(5) Turn the ignition switch to the "LOCK" (OFF) position.

Q: Is the measured voltage within the specified range?

YES : Go to Step 6.
NO : Go to Step 8.

STEP 8. Check PCM connector B-20 for loose, corroded or damaged terminals, or terminals pushed back in the connector.

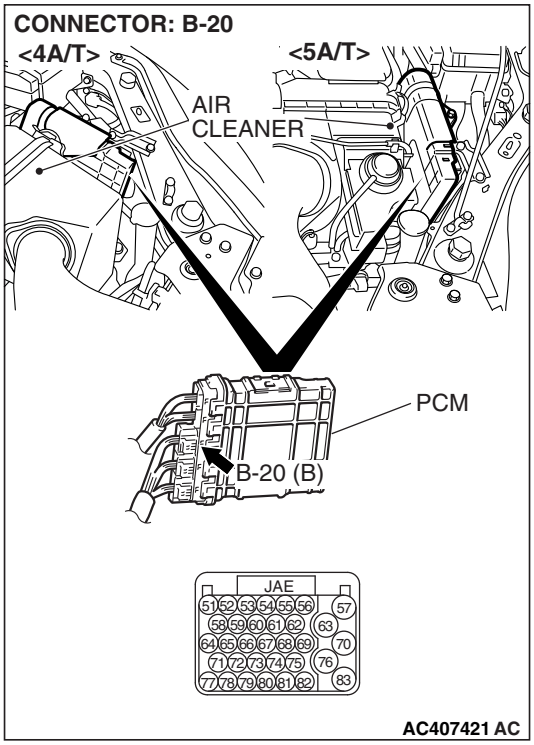

Q: Are the connector and terminals in good condition?

YES : Go to Step 9.
NO : Repair or replace the damaged components. Refer to GROUP 00E, Harness Connector Inspection P.00E-2.

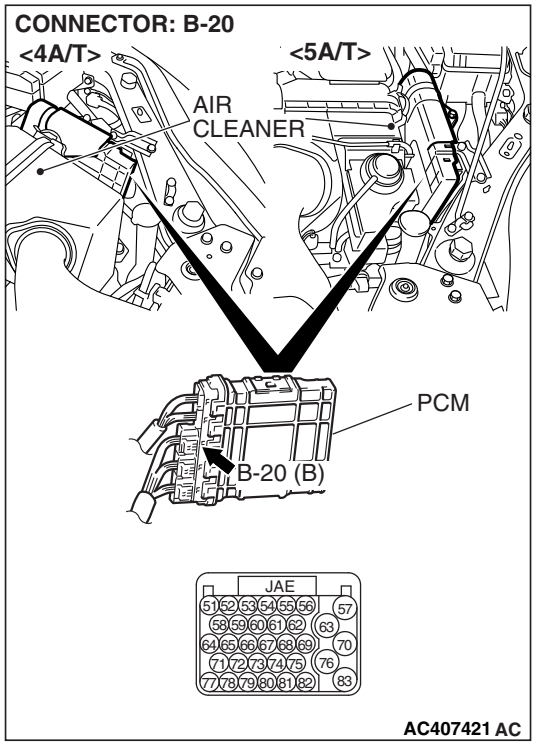

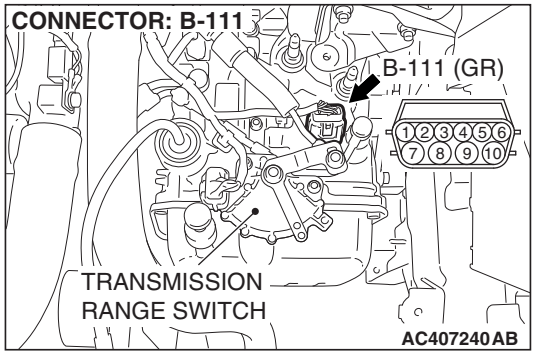

STEP 9. Check the harness for a short circuit to ground between PCM connector B-20 terminal 74 and A/T control solenoid valve connector B-111 terminal 1.

Q: Is the harness wire in good condition?

YES : Go to Step 6.

NO : Repair or replace the harness wire.

DTC P1766 (P0715): Input Shaft Speed Sensor System (Short Circuit/Open Circuit)

Input Shaft Speed Sensor System Circuit

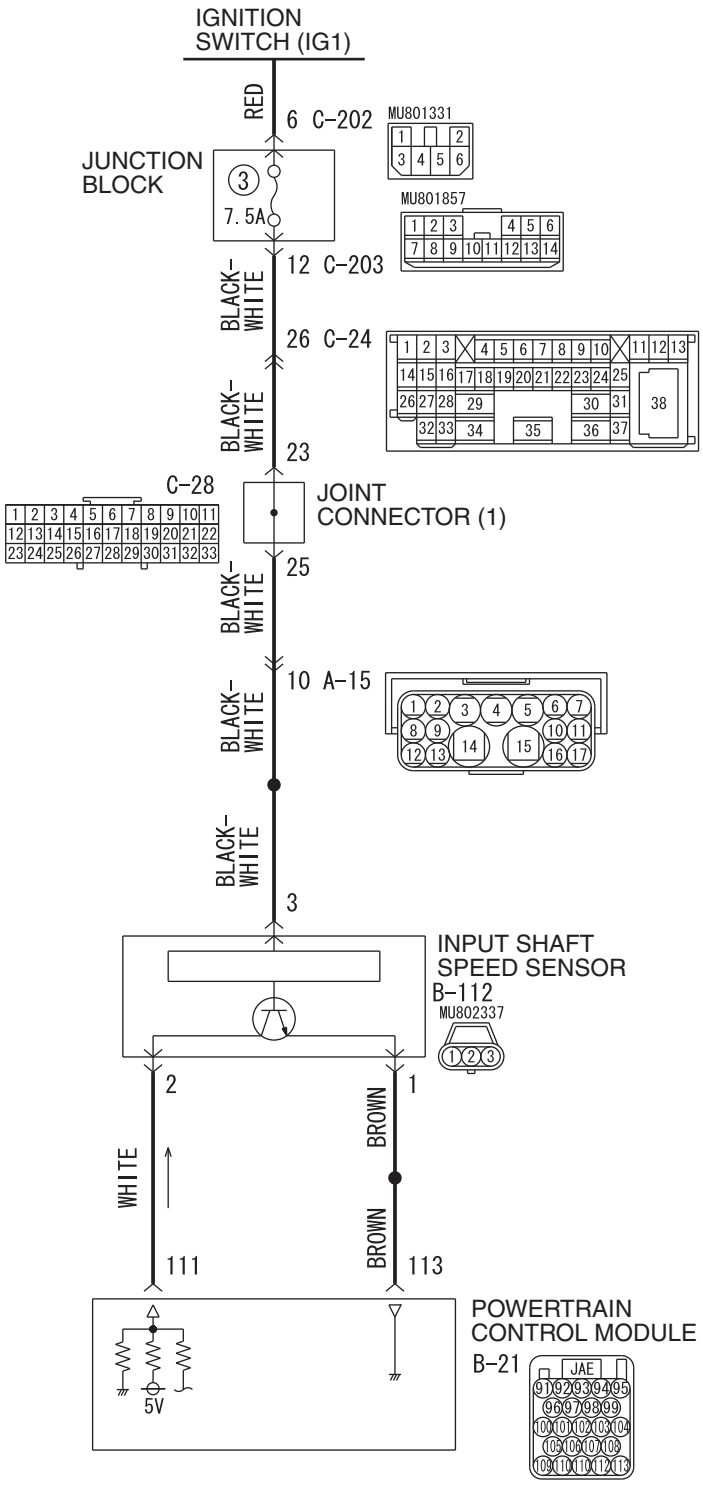

AC808343AB

CONNECTOR: A-15

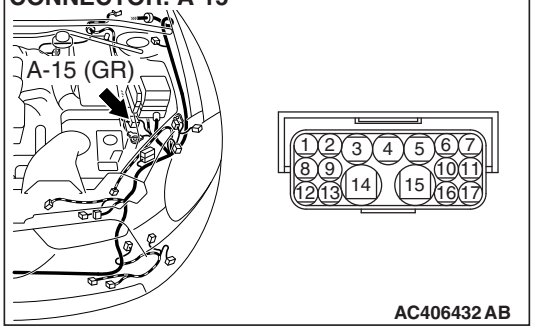

CONNECTOR: B-21

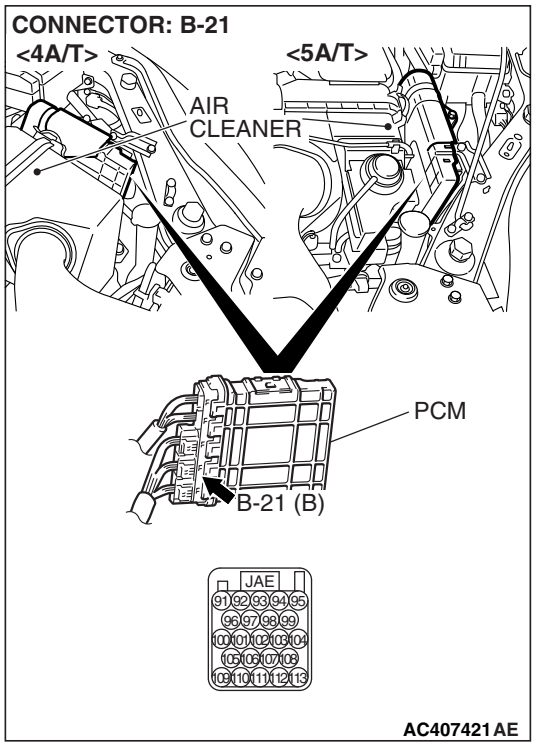

CONNECTOR: B-112

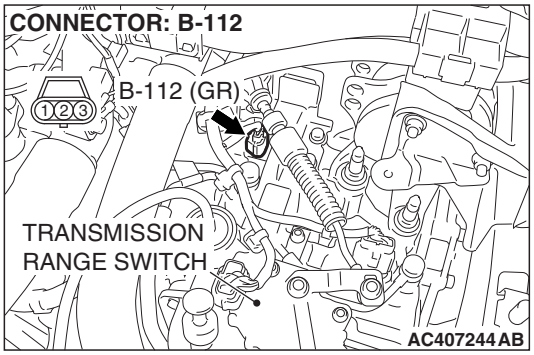

CONNECTOR: C-24

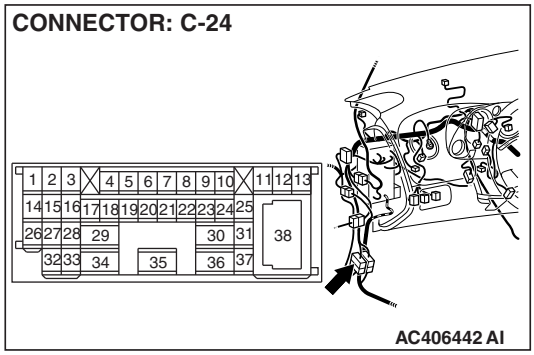

CONNECTOR: C-28

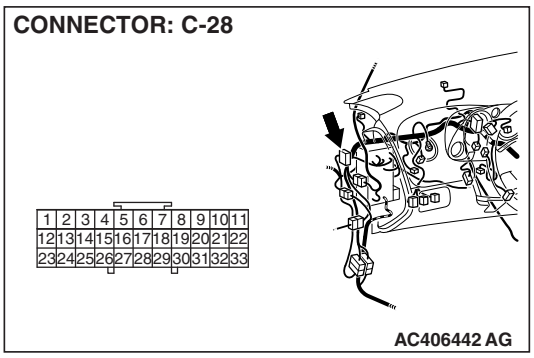

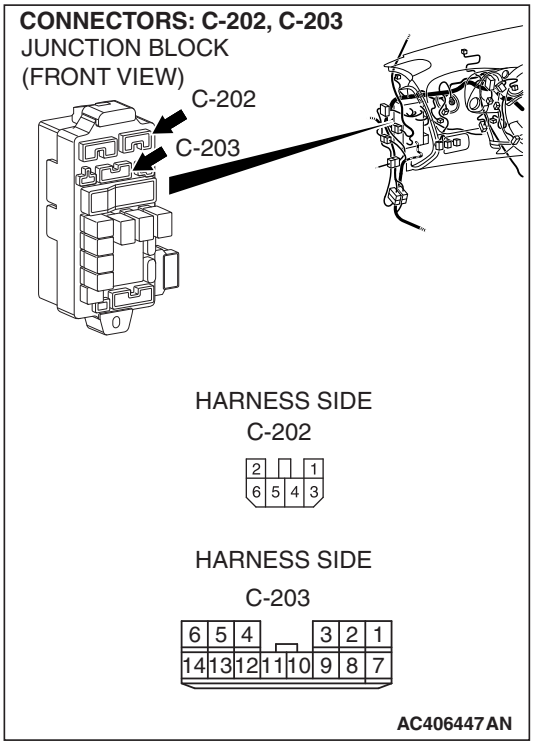

CIRCUIT OPERATION

- The input shaft speed sensor generates 0 ⇔ 5 volts pulse signal when the input shaft rotates. The pulse signal frequency increases with a rise in input shaft speed.
- The input shaft speed sensor is connected to the PCM (terminals 111 and 113) via the input shaft speed sensor connector (terminals 1 and 2).
- The PCM detects the input shaft speed by the signal input to terminal 111.
- The input shaft speed sensor generates the pulse signal as the teeth of the underdrive clutch retainer pass the magnetic tip of the sensor.

DESCRIPTIONS OF MONITOR METHODS

- If there is no detection pulse from input shaft speed sensor (turbine rotation) even during driving test at more than specified speed, PCM judges that input shaft speed sensor has a failure.

MONITOR EXECUTION

- Continuous

MONITOR EXECUTION CONDITIONS (OTHER MONITOR AND SENSOR)

Other Monitor (There is no temporary DTC stored in memory for the item monitored below)

- DTC P1767 (P0720): Output shaft speed sensor malfunction

Sensor (The sensor below is determined to be normal)

- Output shaft speed sensor

LOGIC FLOW CHARTS (Monitor Sequence)

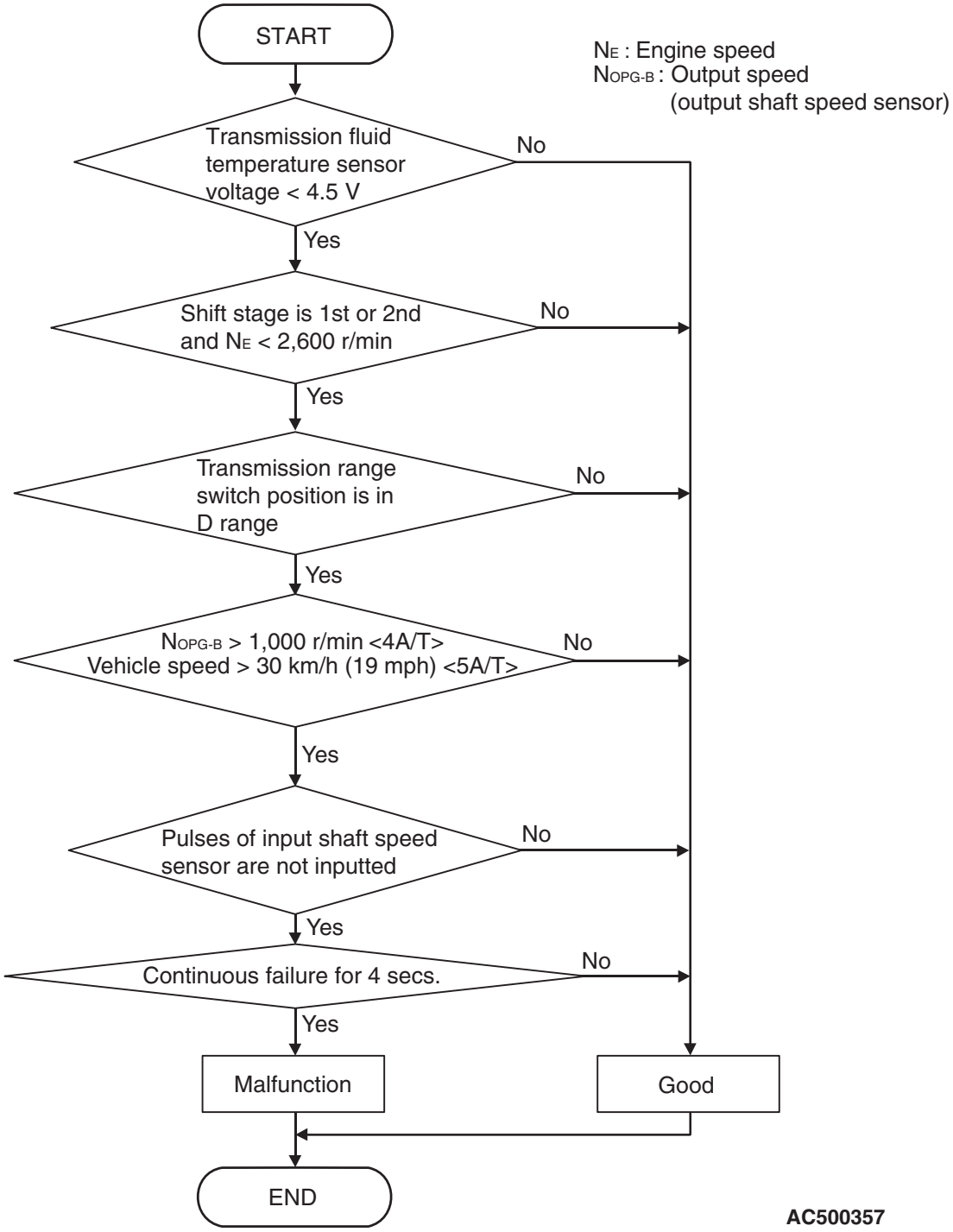

DTC SET CONDITIONS

Check Conditions

- Transmission range switch position: D.
- Output speed: 1,000 r/min or more. <4A/T>
- Vehicle speed: 30 km/h (19 mph). <5A/T>
- Transmission fluid temperature sensor voltage: 4.5 volts or less.

Judgment Criteria

- Input shaft speed sensor signal: no signal change. (4 seconds)
- If DTC P1766 (P0715) is set consecutively four times, the transaxle is locked into 3rd gear or 2nd gear as a fail-safe measure, and the selector lever position indicator light (D, 1 through 4 or 5) flashes once per second.

OBD-II DRIVE CYCLE PATTERN

Start the engine, shift to 3rd gear or higher, and drive at 40 km/h (25 mph) or more for 10 seconds.

TROUBLESHOOTING HINTS (THE MOST LIKELY CAUSES FOR THIS CODE TO BE SET ARE:)

- Malfunction of the input shaft speed sensor
- Malfunction of the underdrive clutch retainer
- Damaged harness or connector
- Malfunction of the PCM

DIAGNOSIS

Required Special Tools:

- MB991958: Scan Tool (M.U.T.-III Sub Assembly)
  - MB991824: V.C.I.
  - MB991827: M.U.T.-III USB Cable
  - MB991910: M.U.T.-III Main Harness A

STEP 1. Using scan tool MB991958, check data list item 5: Input Shaft Speed Sensor.

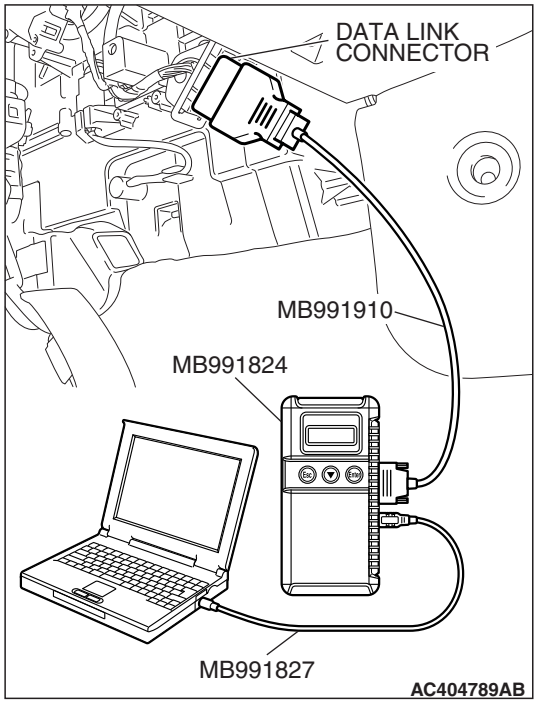

⚠ CAUTION

To prevent damage to scan tool MB991958, always turn the ignition switch to the "LOCK" (OFF) position before connecting or disconnecting scan tool MB991958.

(1) Connect scan tool MB991958 to the data link connector.
(2) Start the engine.
(3) Set scan tool MB991958 to data reading mode.
- Item 5: Input Shaft Speed Sensor.
  - When driving at constant speed of 50 km/h (31 mph), the display should be "1,500 – 1,800 r/min" (Gear range: 3rd gear). <4A/T>
  - When driving at constant speed of 60 km/h (37 mph), the display should be "1,400 – 1,700 r/min" (Gear range: 4th gear). <5A/T>

(4) Turn the ignition switch to the "LOCK" (OFF) position.

Q: Is the sensor operating properly?

YES : It can be assumed that this malfunction is intermittent. Refer to GROUP 00, How to Use Troubleshooting/Inspection Service Points – How to Cope with Intermittent Malfunction P.00-14.

NO : Go to Step 2.

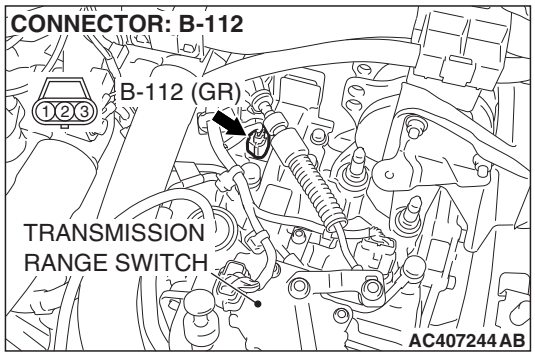

STEP 2. Measure the power supply voltage at the input shaft speed sensor connector B-112.

(1) Disconnect connector B-112 and measure at the harness side.

(2) Turn the ignition switch to the "ON" position.

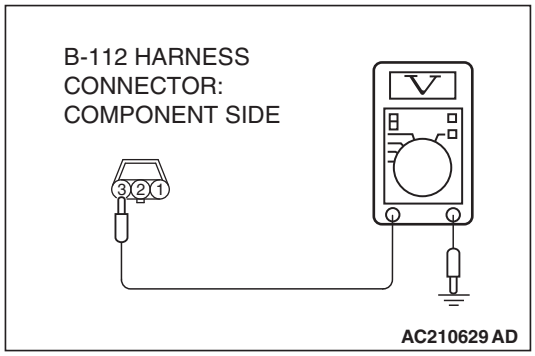

(3) Measure the voltage between terminal 3 and ground.
- The voltage should measure battery positive voltage.

(4) Turn the ignition switch to the "LOCK" (OFF) position.

Q: Is the measured voltage battery positive voltage?

YES : Go to Step 5.
NO : Go to Step 3.

STEP 3. Check intermediate connector A-15, C-24, joint connector (1) C-28 and junction block connector C-203 for loose, corroded or damaged terminals, or terminals pushed back in the connector.

Q: Are the connectors and terminals in good condition?

YES : Go to Step 4.

NO : Repair or replace the damaged components. Refer to GROUP 00E, Harness Connector Inspection P.00E-2.

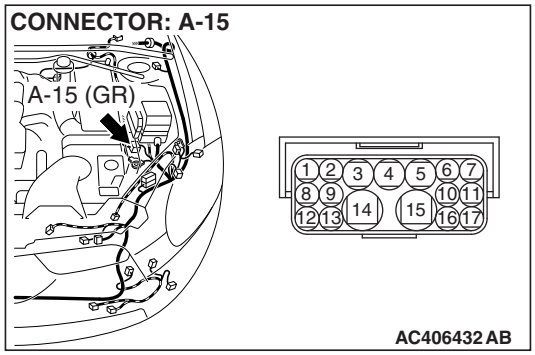

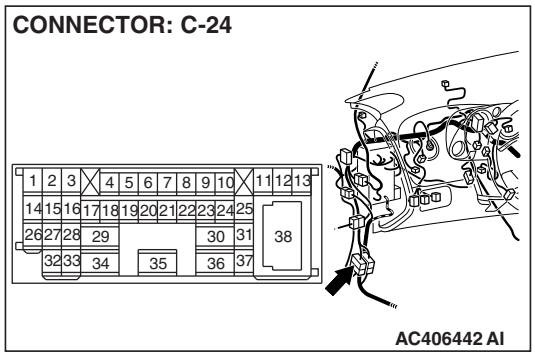

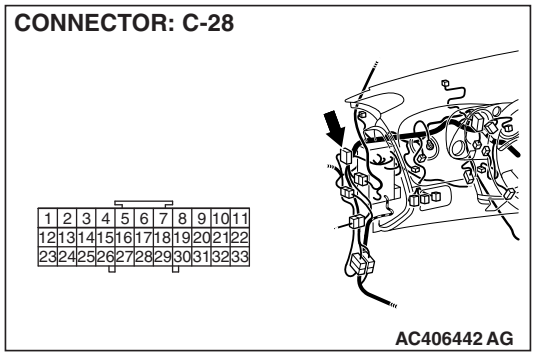

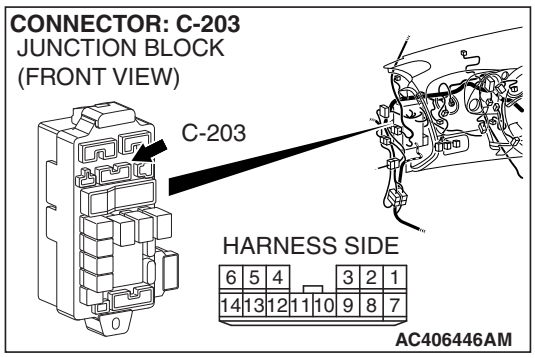

STEP 4. Check the harness for open circuit or short circuit to ground between the input shaft speed sensor connector B-112 terminal 3 and the junction block connector C-203 terminal 12.

Q: Is the harness wire in good condition?

YES : Go to Step 5.
NO : Repair or replace the harness wire.

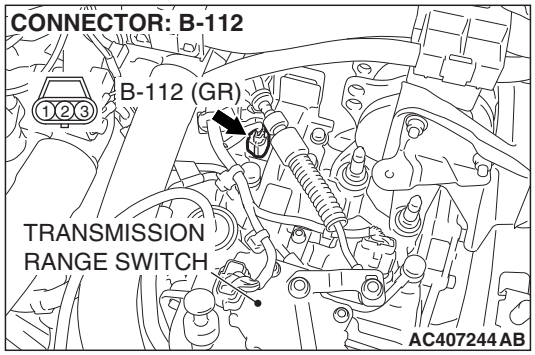

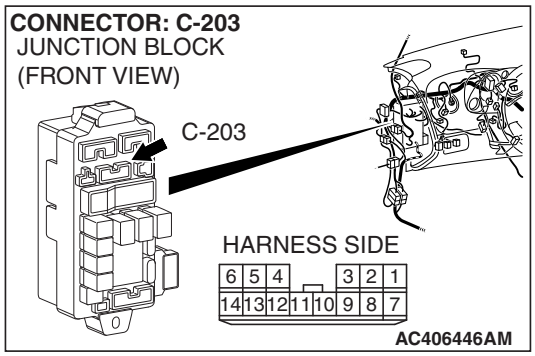

STEP 5. Measure the PCM to speed sensor output voltage at the input shaft speed sensor connector B-112.

(1) Disconnect connector B-112 from the speed sensor and measure voltage at the harness side.
(2) Turn the ignition switch to the "ON" position.

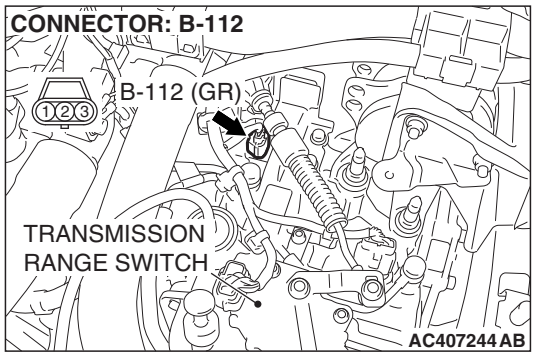

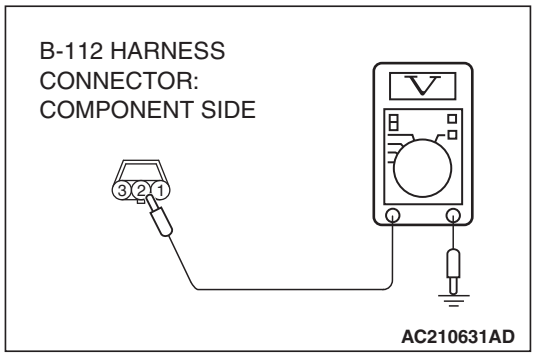

(3) Measure the voltage between terminal 2 and ground.
- The voltage should measure between 4.5 and 4.9 volts.

(4) Turn the ignition switch to the "LOCK" (OFF) position.

Q: Is the measured voltage between 4.5 and 4.9 volts?

YES : Go to Step 11.
NO : Go to Step 6.

STEP 6. Measure the PCM output voltage to the speed sensor at the PCM connector B-21 by using check harness special tool MB991923.

(1) Disconnect all the connectors from the PCM.

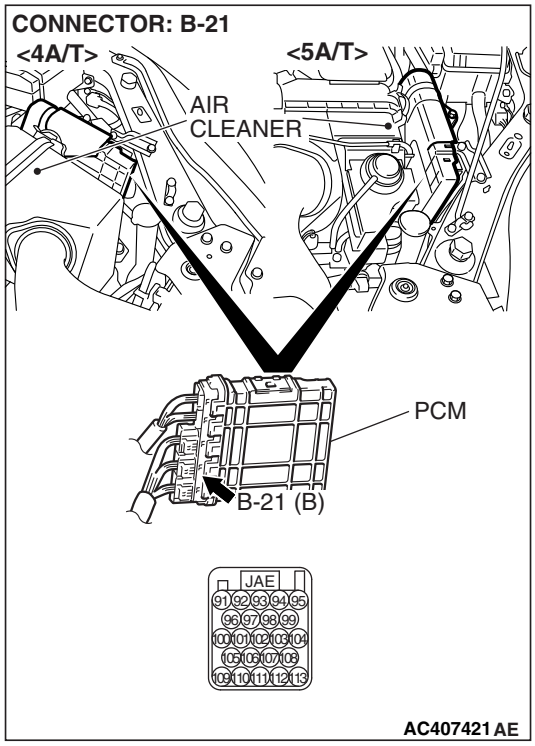

(2) Connect special tool MB991923 (check harness) between the PCM and the body-side harness connector.

(3) Turn the ignition switch to the "ON" position.

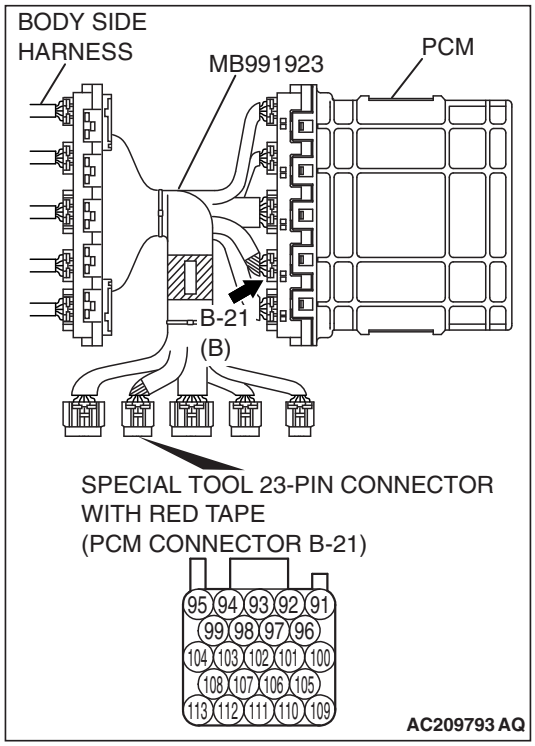

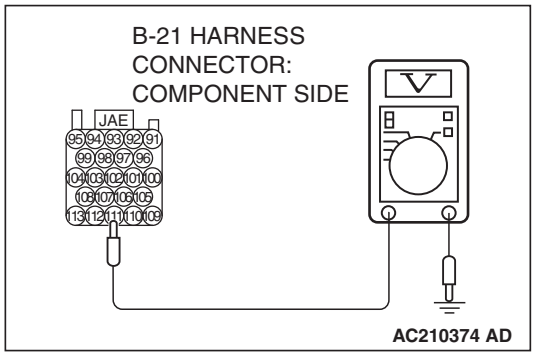

(4) Measure the voltage between PCM terminal 111 and ground.
- The voltage should measure between 4.5 and 4.9 volts.

(5) Turn the ignition switch to the "LOCK" (OFF) position.

Q: Is the measured voltage between 4.5 and 4.9 volts?

YES : Go to Step 7.
NO : Go to Step 9.

STEP 7. Check PCM connector B-21 and input shaft speed sensor connector B-112 for loose, corroded or damaged terminals, or terminals pushed back in the connector.

Q: Are the connectors in good condition?

YES : Go to Step 8.
NO : Repair or replace the damaged components. Refer to GROUP 00E, Harness Connector Inspection P.00E-2.

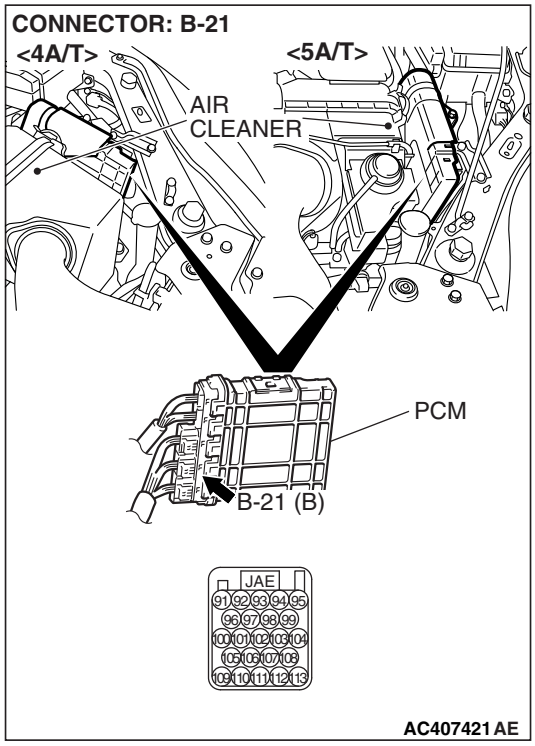

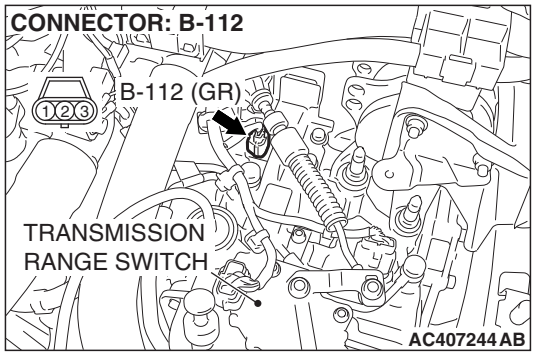

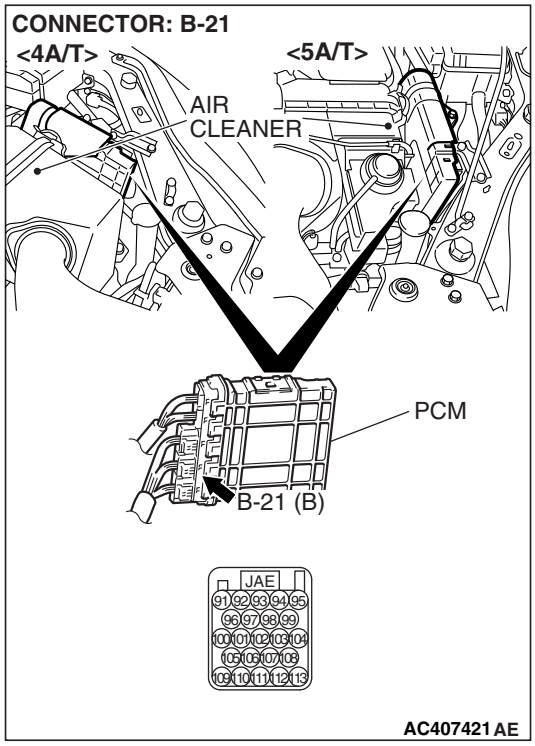

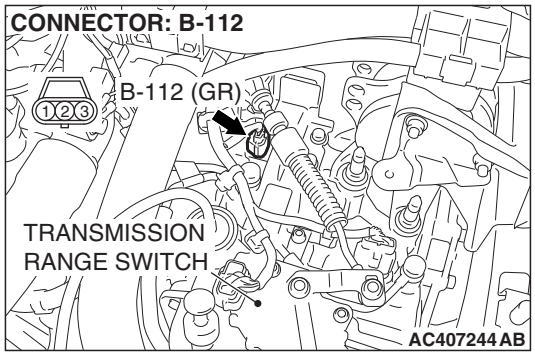

STEP 8. Check the harness for open circuit or damage between PCM connector B-21 terminal 111 and input shaft speed sensor connector B-112 terminal 2.

Q: Is the harness wire in good condition?

YES : Go to Step 19.

NO : Repair or replace the harness wire.

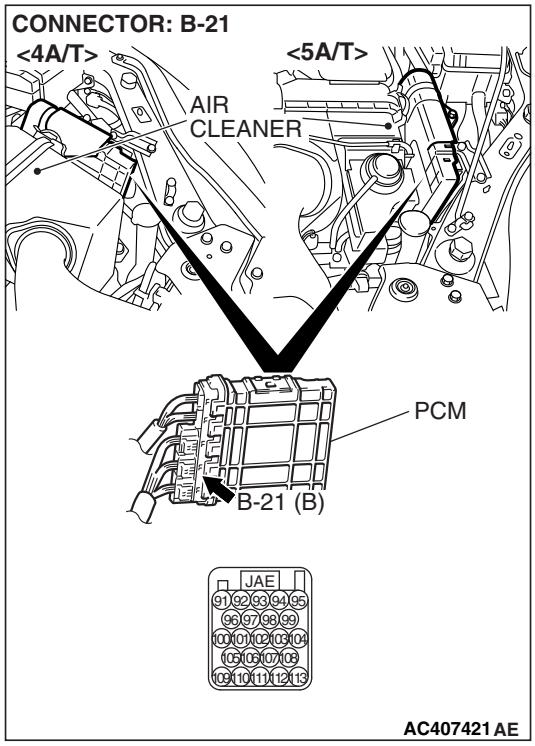

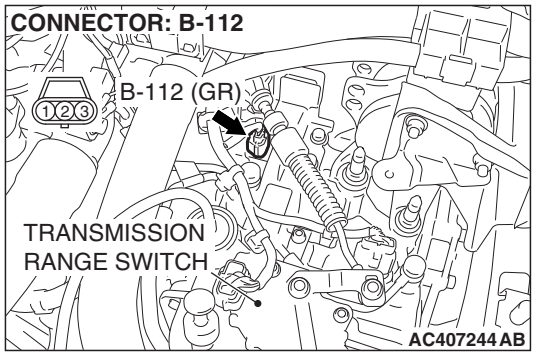

STEP 9. Check PCM connector B-21 and input shaft speed sensor connector B-112 for loose, corroded or damaged terminals, or terminals pushed back in the connector.

Q: Are the connectors and terminals in good condition?

YES : Go to Step 10.

NO : Repair or replace the damages components. Refer to GROUP 00E, Harness Connector Inspection P.00E-2.

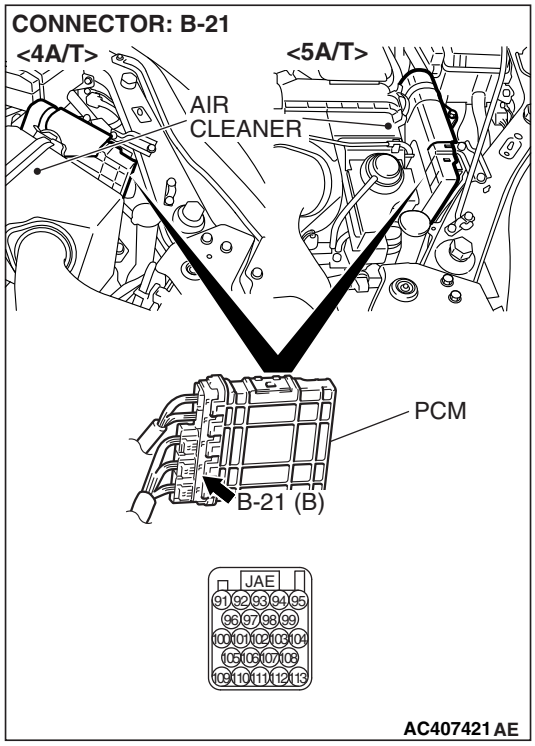

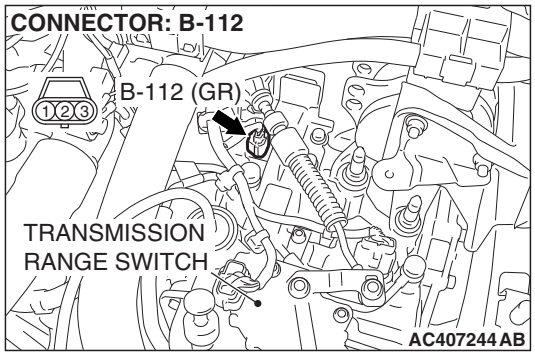

STEP 10. Check the harness for short circuit to ground between PCM connector B-21 terminal 111 and input shaft speed sensor connector B-112 terminal 2.

Q: Is the harness wire in good condition?

YES : Go to Step 11.

NO : Repair or replace the harness wire.

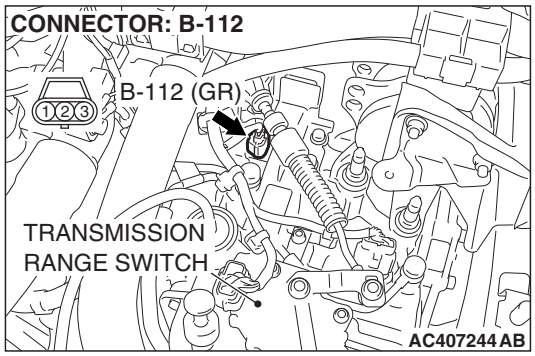

STEP 11. Measure the ground circuit for resistance at the input shaft speed sensor connector B-112.

(1) Disconnect connector B-112 from the speed sensor and measure at the harness side.

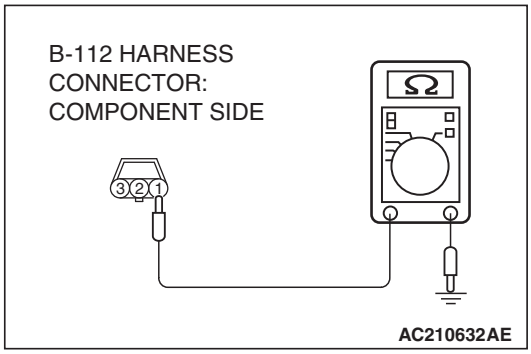

(2) Measure the resistance between terminal 1 and ground.
- The resistance should measure less than 2 ohms.

Q: Is the measured resistance less than 2 ohms?

YES : Go to Step 16.
NO : Go to Step 12.

STEP 12. Measure the resistance at the PCM connector B-21 by using check harness special tool.

(1) Disconnect all the connectors from the PCM.

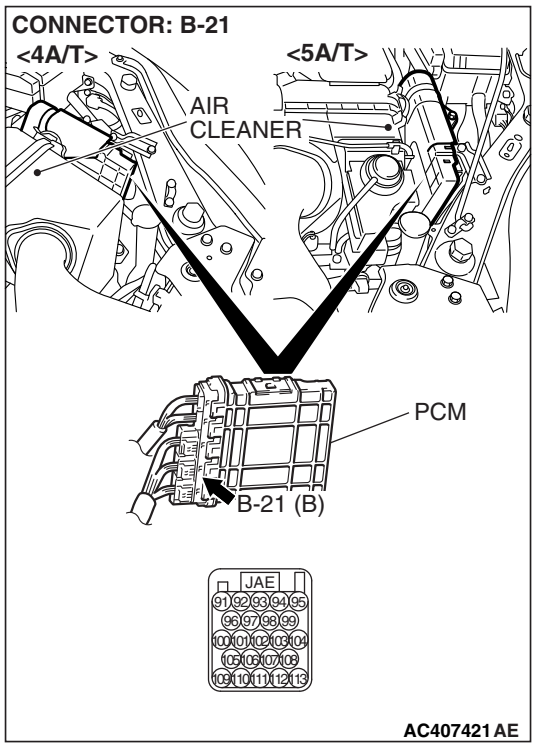

(2) Connect special tool MB991923 (check harness) between the PCM and the body-side harness connector.

(3) Turn the ignition switch to the "ON" position.

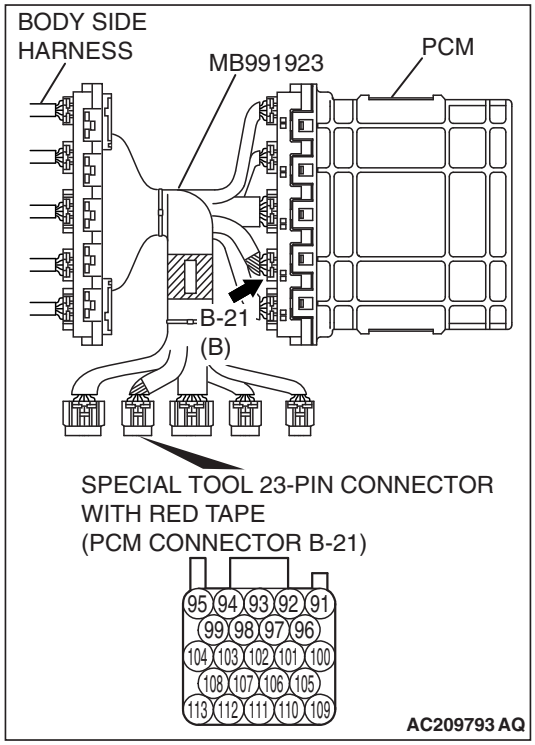

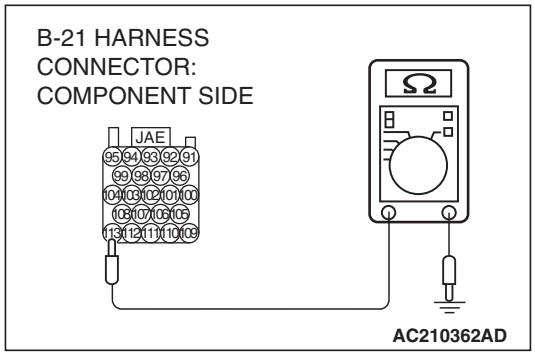

(4) Measure the resistance between terminal 113 and ground.
- The resistance should measure less than 2 ohms.

(5) Turn the ignition switch to the "LOCK" (OFF) position.

Q: Is the measured resistance less than 2 ohms?

YES : Go to Step 13.
NO : Go to Step 15.

STEP 13. Check PCM connector B-21 and input shaft speed sensor connector B-112 for loose, corroded or damaged terminals, or terminals pushed back in the connector.

Q: Are the connectors and terminals in good condition?

YES : Go to Step 14.
NO : Repair or replace the damaged components. Refer to GROUP 00E, Harness Connector Inspection P.00E-2.

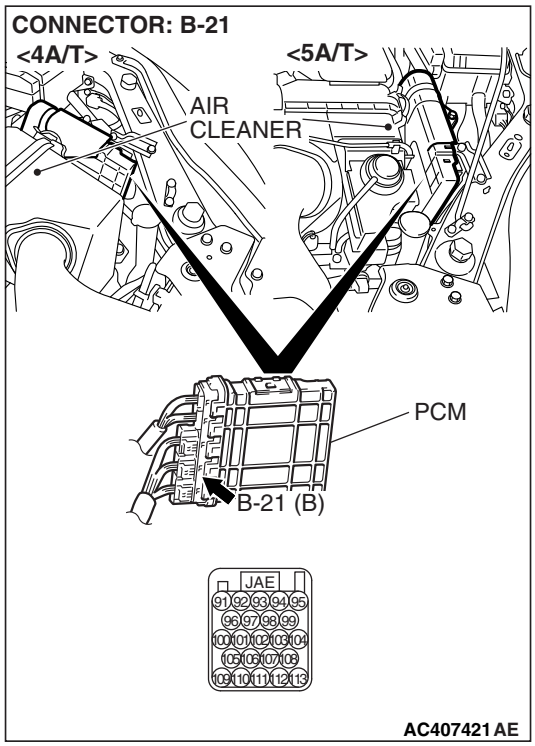

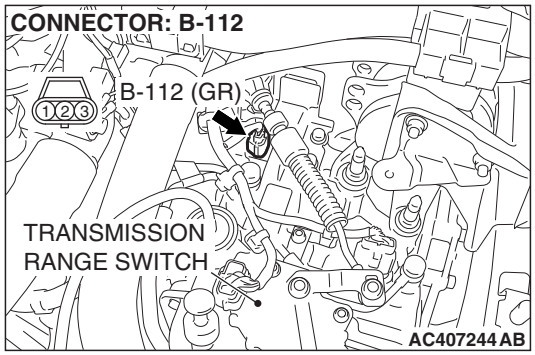

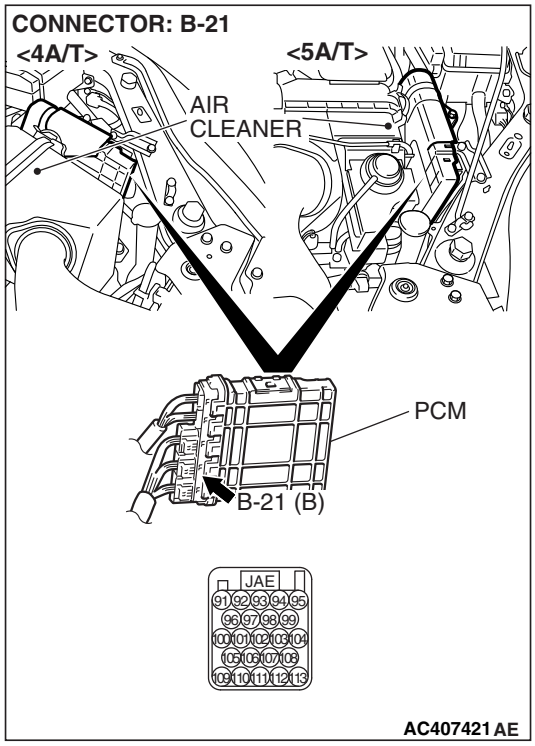

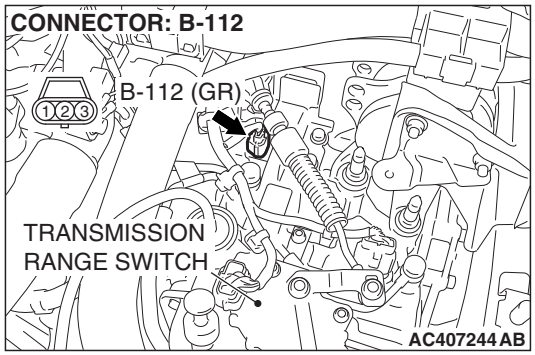

STEP 14. Check the harness for open circuit or damage between PCM connector B-21 terminal 113 and input shaft speed sensor connector B-112 terminal 1.

Q: Is the harness wire in good condition?

YES : Go to Step 16.

NO : Repair or replace the harness wire.

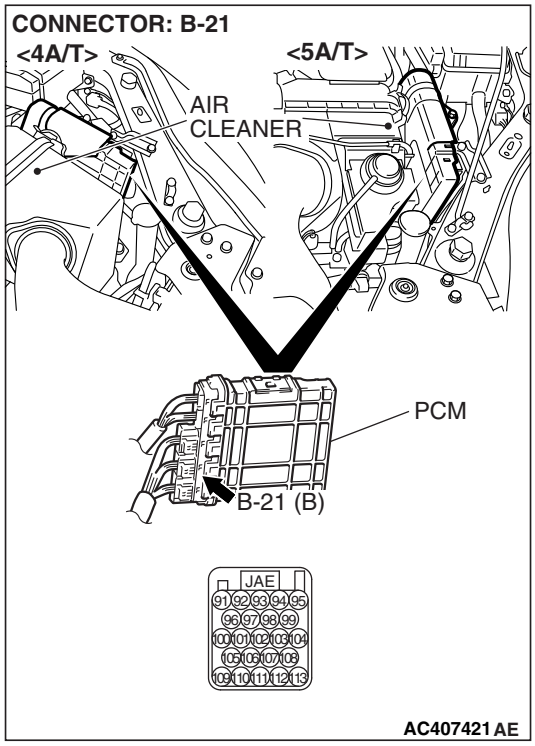

STEP 15. Check PCM connector B-21 for loose, corroded or damaged terminals, or terminals pushed back in the connector.

Q: Are the connector and terminals in good condition?

YES : Replace the PCM. When the PCM is replaced, register the encrypted code. Refer to GROUP 54A, Encrypted Code Registration Criteria Table P.54A-19.

NO : Repair or replace the damaged components. Refer to GROUP 00E, Harness Connector Inspection P.00E-2.

STEP 16. Using the oscilloscope, check the input shaft speed sensor waveform at PCM connectors B-21 by using check harness special tool MB991923.

(1) Disconnect all the connectors from the PCM.

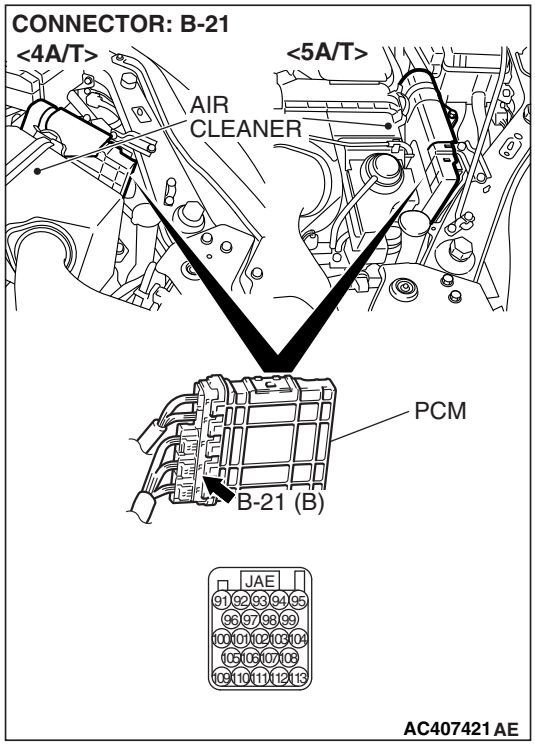

(2) Connect special tool MB991923 (check harness) between the PCM and the body-side harness connector.

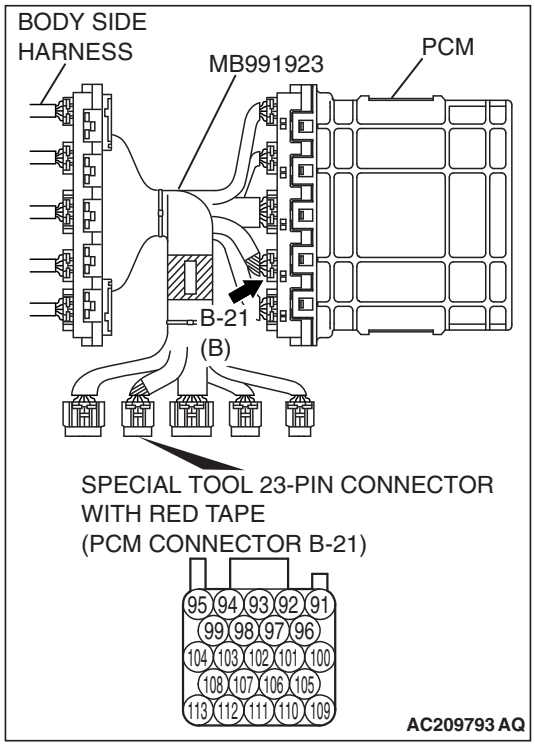

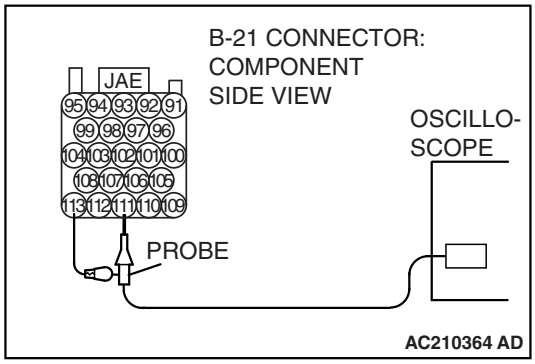

(3) Connect an oscilloscope probe to PCM connector B-21 terminal 111 and to 113.
(4) Start the engine and drive the vehicle at constant speed of 50 km/h (31 mph) (Gear range: 3rd gear) <4A/T> or 60 km/h (37 mph) (Gear range: 4th gear) <5A/T>.

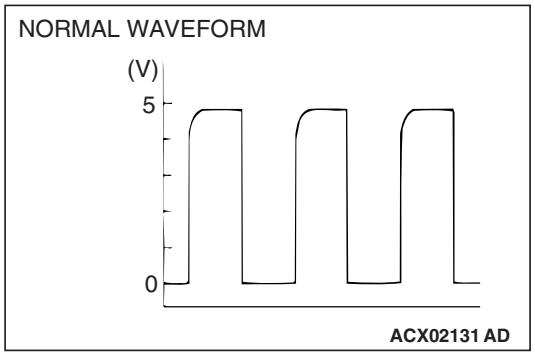

(5) Check the input shaft speed sensor waveform.
- The input shaft speed sensor waveform should show a pattern similar to the illustration. The maximum value should be 4.8 volts or more and the minimum value 0.8 volt or less. The output waveform should not contain electrical noise.

(6) Turn the ignition switch to the "LOCK" (OFF) position.

Q: Is the waveform normal?

YES : Go to Step 19.
NO : Go to Step 17.

STEP 17. Replace the input shaft speed sensor.

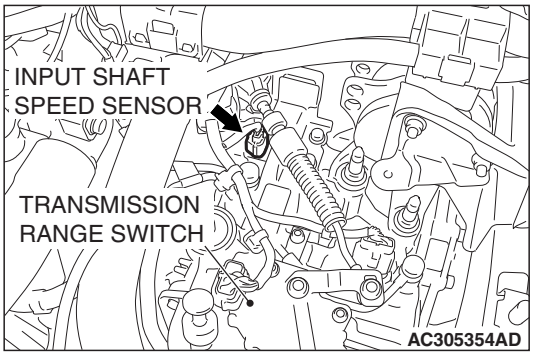

(1) Replace the input shaft speed sensor. Refer to GROUP 23B, P.23B-8 Transaxle <4A/T> or Refer to GROUP 23C, P.23C-8 Transaxle <5A/T>.
(2) Test drive the vehicle.
(3) Check for A/T diagnostic trouble code.

Q: Is A/T DTC P1766 set?

YES : Go to Step 18.
NO : The procedure is complete.

STEP 18. Replace the underdrive clutch retainer.

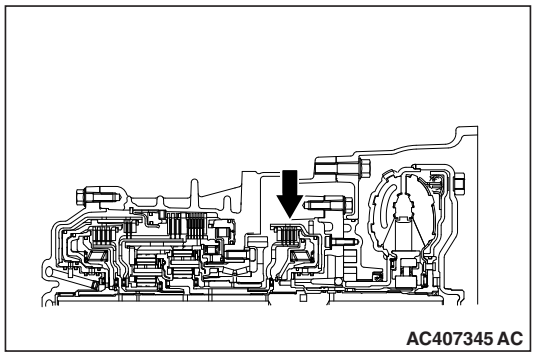

(1) Replace the underdrive clutch retainer. Refer to GROUP 23B, P.23B-48 Underdrive Clutch and Input Shaft <4A/T> or Refer to GROUP 23C, P.23C-52 Underdrive Clutch and Input Shaft <5A/T>.
(2) Test drive the vehicle.
(3) Check for A/T diagnostic trouble code.

Q: Is A/T DTC P1766 set?

YES : An A/T DTC may have set due to external radio frequency interference (RFI) possibly caused by cellular phone activity, or aftermarket components installed on the vehicle.
NO : The procedure is complete.

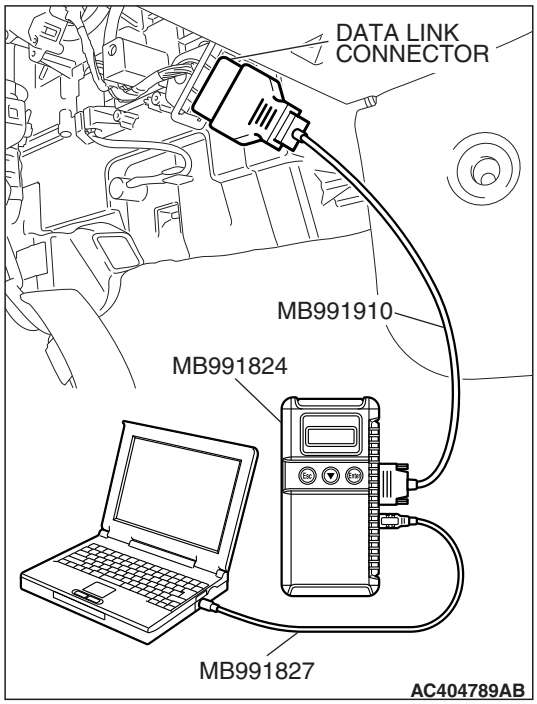

STEP 19. Using scan tool MB991958, check data list item 5: Input Shaft Speed Sensor.

⚠ CAUTION

To prevent damage to scan tool MB991958, always turn the ignition switch to the "LOCK" (OFF) position before connecting or disconnecting scan tool MB991958.

(1) Connect scan tool MB991958 to the data link connector.
(2) Start the engine.
(3) Set scan tool MB991958 to data reading mode.
- Item 5: Input Shaft Speed Sensor.
  - When driving at constant speed of 50 km/h (31 mph), the display should be "1,500 – 1,800 r/min" (Gear range: 3rd gear). <4A/T>
  - When driving at constant speed of 60 km/h (37 mph), the display should be "1,400 – 1,700 r/min" (Gear range: 4th gear). <5A/T>

(4) Turn the ignition switch to the "LOCK" (OFF) position.

Q: Is the sensor operating properly?

YES : It can be assumed that this malfunction is intermittent. Refer to GROUP 00, How to Use Troubleshooting/Inspection Service Points – How to Cope with Intermittent Malfunction P.00-14.

NO : Replace the PCM. When the PCM is replaced, register the encrypted code. Refer to GROUP 54A, Encrypted Code Registration Criteria Table P.54A-19.

DTC P1767 (P0720): Output Shaft Speed Sensor System (Short Circuit/Open Circuit)

Output Shaft Speed Sensor System Circuit

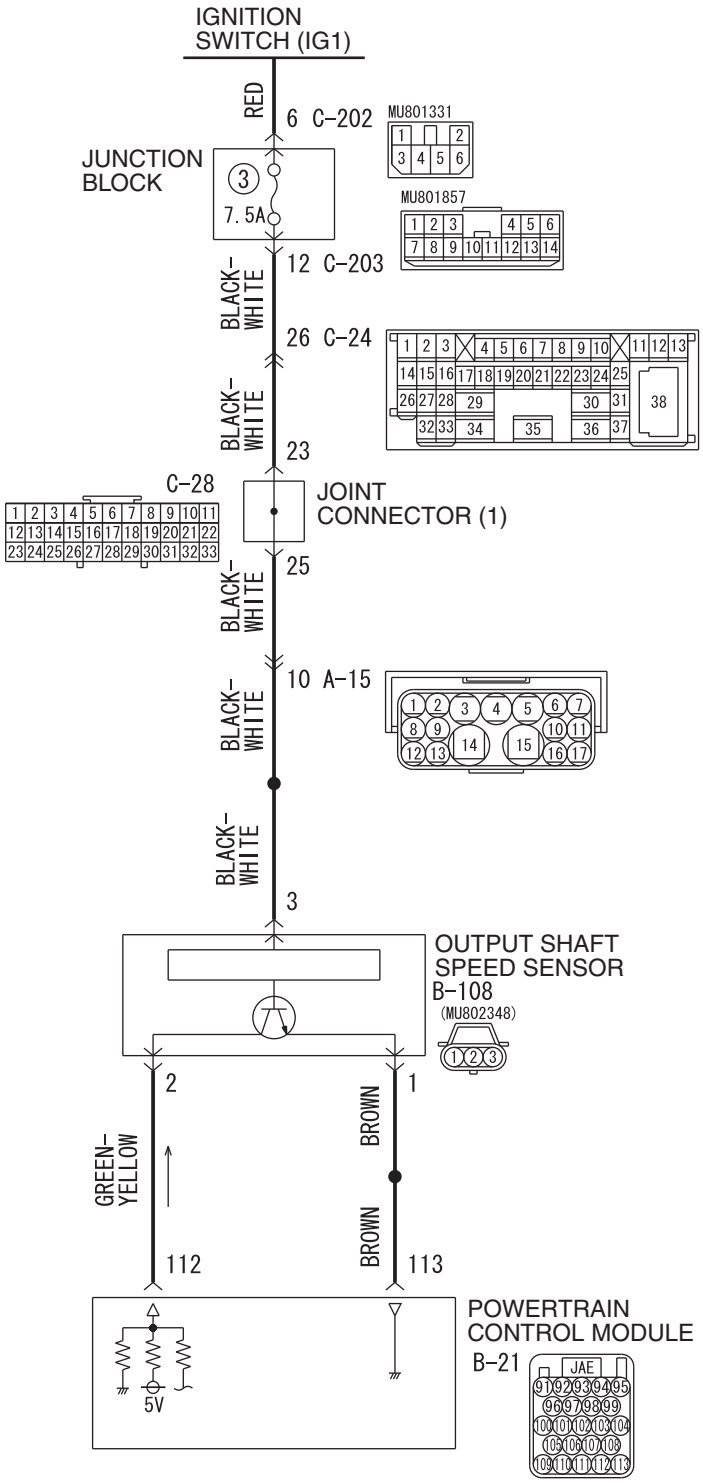

W6P23M007A
AC406422 AB

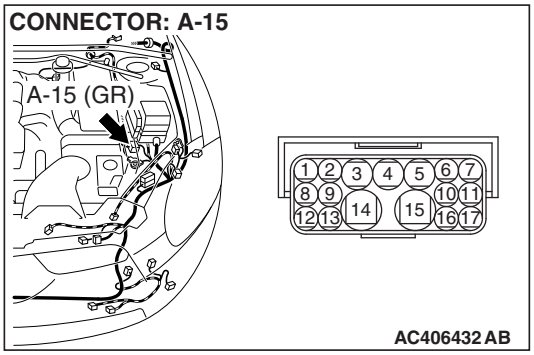
CONNECTOR: A-15
A-15 (GR)
1 2 3 4 5 6 7
8 9 10 11
12 13 14 15 16 17
AC406432 AB

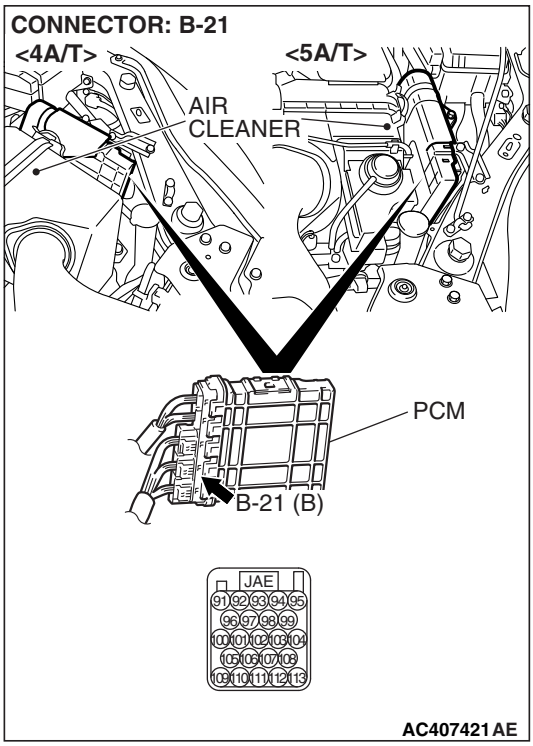
CONNECTOR: B-21
<4A/T>
<5A/T>
AIR CLEANER
PCM
B-21 (B)
JAE
91 92 93 94 95
96 97 98 99
100 101 102 103 104
105 106 107 108
109 110 111 112 113
AC407421 AE

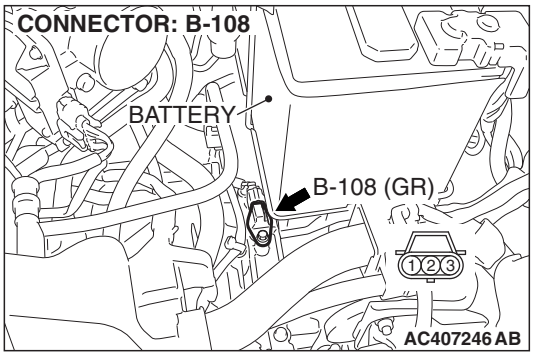
CONNECTOR: B-108
BATTERY
B-108 (GR)
1 2 3
AC407246 AB

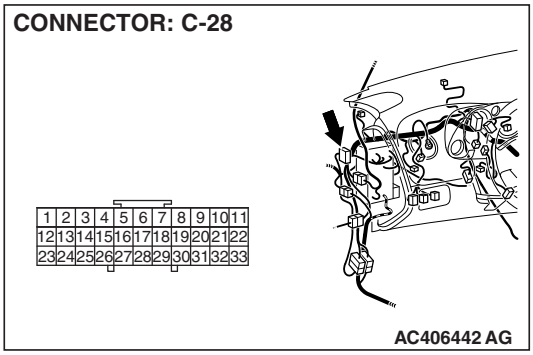
CONNECTOR: C-28
1 2 3 4 5 6 7 8 9 10 11
12 13 14 15 16 17 18 19 20 21 22
23 24 25 26 27 28 29 30 31 32 33
AC406442 AG

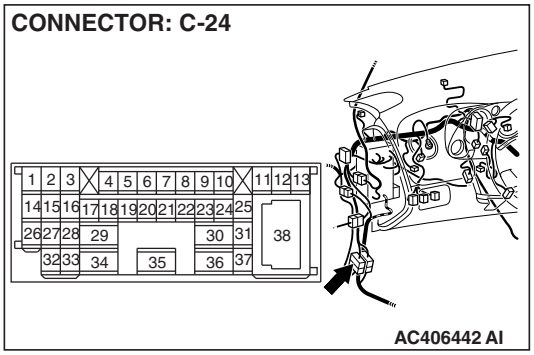
CONNECTOR: C-24
1 2 3 4 5 6 7 8 9 10 11 12 13
14 15 16 17 18 19 20 21 22 23 24 25
26 27 28 29 30 31
32 33 34 35 36 37
38
AC406442 AI

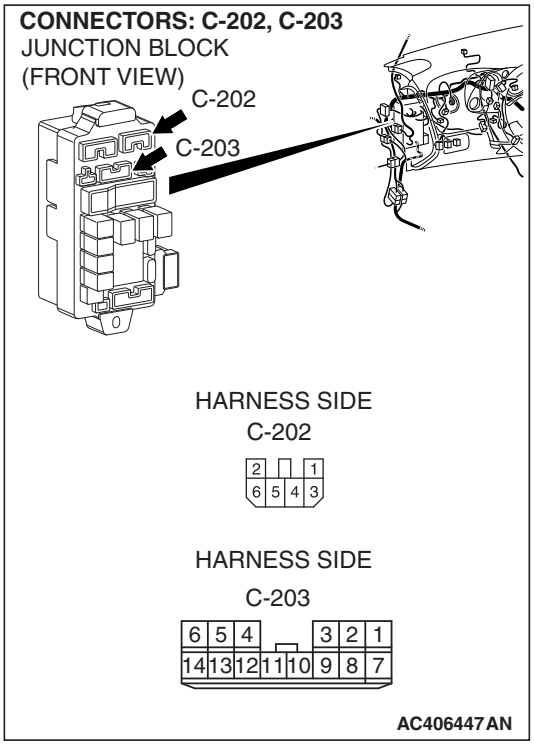

CIRCUIT OPERATION

- The output shaft speed sensor generates a 0 ⇔ 5 volt pulse signal when the output shaft rotates. The pulse signal frequency increases with a rise output shaft speed.
- The output shaft speed sensor is connected to the PCM (terminals 112 and 113) via the output shaft speed sensor connector (terminals 1 and 2).
- The PCM detects the output shaft speed by the signal input to terminal 112.
- The output shaft speed sensor generates the pulse signal as the teeth of the transfer drive gear pass the magnetic tip of the sensor.

DESCRIPTIONS OF MONITOR METHODS

- <If open circuit occurs during test driving> If abruptly reduced output revolution is detected during test driving, and a difference between turbine revolution and that value calculated from output revolution equals or exceeds specified value, PCM judges that output shaft speed sensor has a failure.
- <If open circuit occurs with vehicle stopped, and driving test is started> If there is no detection pulse from output shaft speed sensor (output rotation) even when engine revolution and turbine revolution both equal or exceed specified value, PCM judges that output shaft speed sensor has a failure.

MONITOR EXECUTION

- Continuous

MONITOR EXECUTION CONDITIONS (OTHER MONITOR AND SENSOR)

Other Monitor (There is no temporary DTC stored in memory for the item monitored below)

- DTC P1766 (P0715): Input shaft speed sensor malfunction
- DTC P1778 (P0743): Torque converter clutch solenoid malfunction
- DTC P1773 (P0753): Low and reverse solenoid malfunction
- DTC P1774 (P0758): Underdrive solenoid malfunction
- DTC P1775 (P0763): Second solenoid malfunction
- DTC P1776 (P0768): Overdrive solenoid malfunction
- DTC P1777 (P0773): Reduction solenoid malfunction <5A/T>
- DTC P1788 (P1751): A/T control relay malfunction

Sensor (The sensors below are determined to be normal)

- Input shaft speed sensor
- Torque converter clutch solenoid
- Low and reverse solenoid
- Underdrive solenoid
- Second solenoid

- Overdrive solenoid
- Reduction solenoid <5A/T>
- A/T control relay

LOGIC FLOW CHARTS (Monitor Sequence)

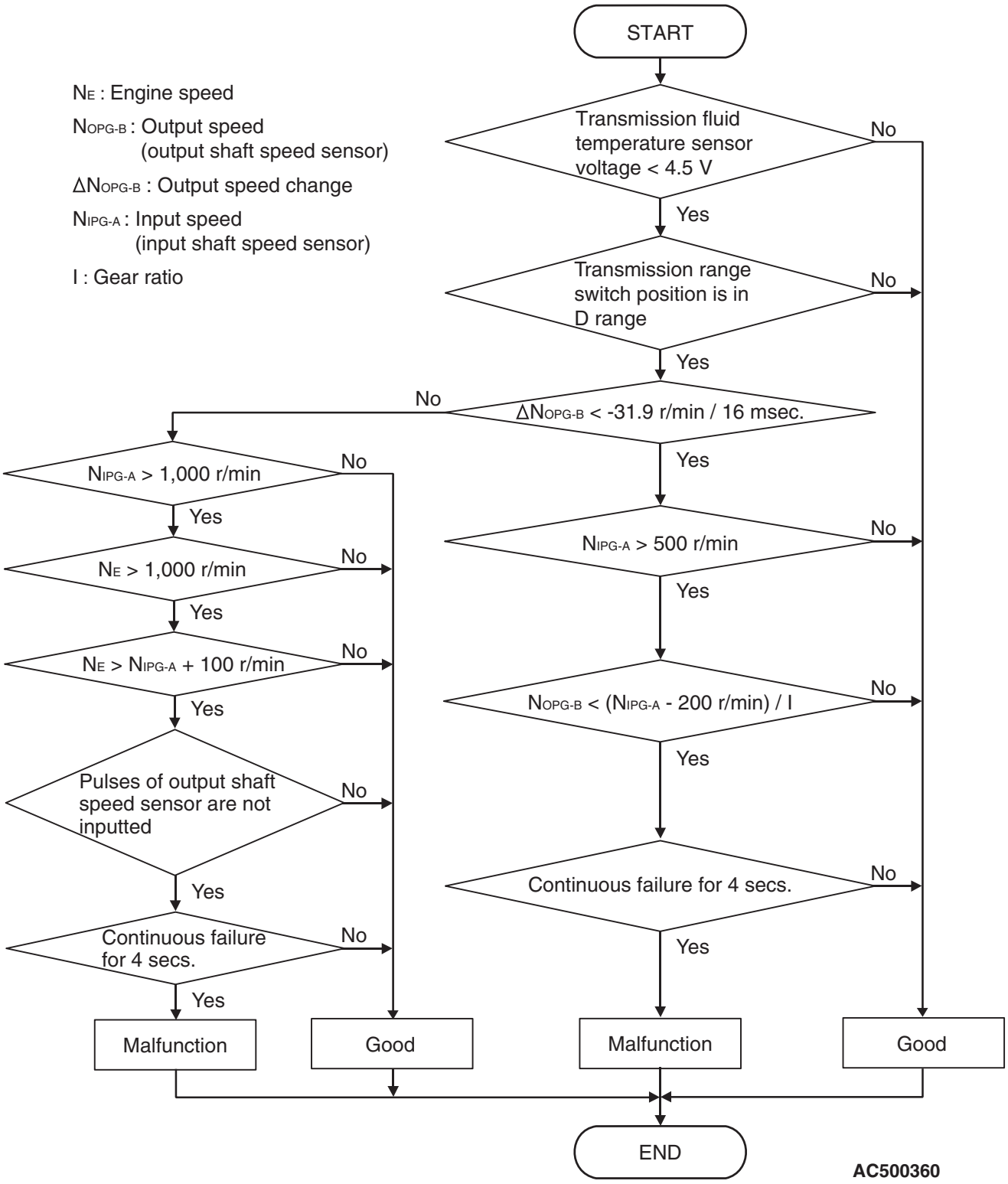

DTC SET CONDITIONS

Check Conditions

- Transmission range switch position: D.
- Input speed: 1,000 r/min or more.
- Engine speed: 1,000 r/min or more.
- Transmission fluid temperature sensor voltage: 4.5 volts or less.
- Calculated slip (engine speed - input speed): 100 r/min or more.

Judgement Criteria

- Output speed: no signal change. (4 seconds)
- If DTC P1767 (P0720) is set consecutively four times, the transaxle is locked into 3rd gear or 2nd gear as a fail-safe measure, and the selector lever position indicator light (D, 1 through 4 or 5) flashes once per second.

Check Conditions

- Transmission range switch position: D.
- Input speed: 500 r/min or more.
- Transmission fluid temperature sensor voltage: 4.5 volts or less.
- Rapid output speed change: -31.9 r/min / 0.016 second or less.

Judgement Criteria

- Output speed: [(input speed - 200 r/min) / gear ratio] or less. (4 seconds)
- If DTC P1767 (P0720) is set consecutively four times, the transaxle is locked into 3rd gear or 2nd gear as a fail-safe measure, and the selector lever position indicator light (D, 1 through 4 or 5) flashes once per second.

OBD-II DRIVE CYCLE PATTERN

Start the engine, and drive for 5 seconds, with 1st gear fixed (1st gear in sport mode), at 20 km/h (12 mph) or more with 50% or more of throttle valve opening. Then stop the vehicle, and drive again for 5 seconds, with 1st gear fixed (1st gear in sport mode), at 20 km/h (12 mph) or more with 50% or more of throttle valve opening.

TROUBLESHOOTING HINTS (THE MOST LIKELY CAUSES FOR THIS CODE TO BE SET ARE:)

- Malfunction of the output shaft speed sensor
- Malfunction of the transfer drive gear or driven gear <4A/T>
- Malfunction of the direct planetary carrier <5A/T>
- Damaged harness or connector
- Malfunction of the PCM

DIAGNOSIS

Required Special Tools:

- MB991958: Scan Tool (M.U.T.-III Sub Assembly)
  - MB991824: V.C.I.
  - MB991827: M.U.T.-III USB Cable
  - MB991910: M.U.T.-III Main Harness A

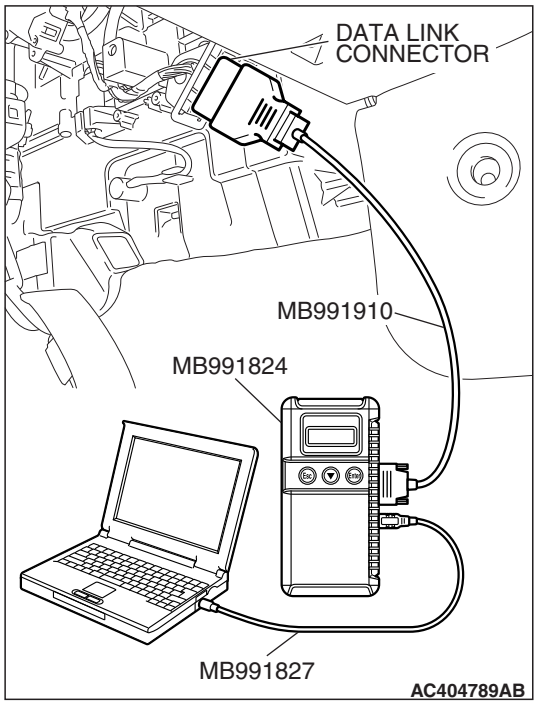

STEP 1. Using scan tool MB991958, check data list item 6: Output Shaft Speed Sensor.

⚠ CAUTION

To prevent damage to scan tool MB991958, always turn the ignition switch to the "LOCK" (OFF) position before connecting or disconnecting scan tool MB991958.

(1) Connect scan tool MB991958 to the data link connector.
(2) Start the engine.
(3) Set scan tool MB991958 to the data reading mode.
- Item 6: Output Shaft Speed Sensor.
  - When driving at a constant speed of 50km/h (31mph), the display should be "1,500 – 1,800 r/min" (Gear range: 3rd gear). <4A/T>
  - When driving at a constant speed of 60km/h (37mph), the display should be "1,400 – 1,700 r/min" (Gear range: 4th gear). <5A/T>

(4) Turn the ignition switch to the "LOCK" (OFF) position.

Q: Is the sensor within the specified range?

YES : It can be assumed that this malfunction is intermittent. Refer to GROUP 00, How to Use Troubleshooting/Inspection Service Points – How to Cope with Intermittent Malfunction P.00-14.

NO : Go to Step 2.

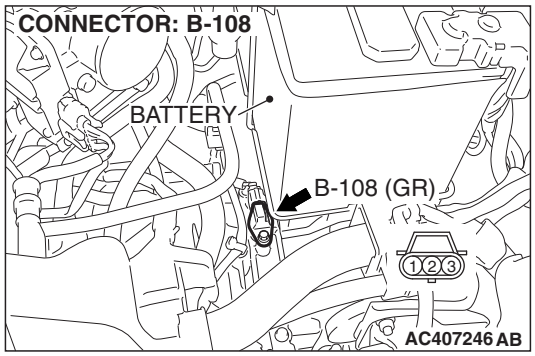

STEP 2. Measure the power supply voltage at the output shaft speed sensor connector B-108.

(1) Disconnect connector B-108 and measure at the harness side.
(2) Turn the ignition switch to the "ON" position.

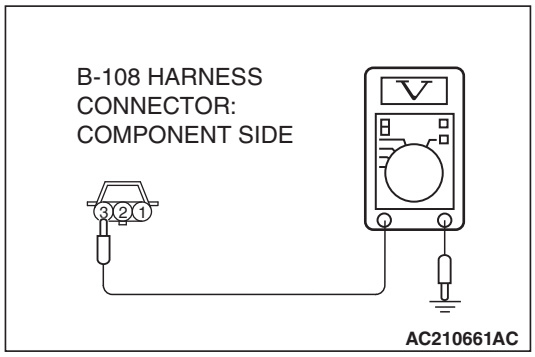

(3) Measure the voltage between terminal 3 and ground.
- The voltage should measure battery positive voltage.

(4) Turn the ignition switch to the "LOCK" (OFF) position.

Q: Is the measured voltage battery positive voltage?

YES : Go to Step 5.
NO : Go to Step 3.

STEP 3. Check intermediate connector A-15, C-24, joint connector (1) C-28 and junction block connector C-203 for loose, corroded or damaged terminals, or terminals pushed back in the connector.

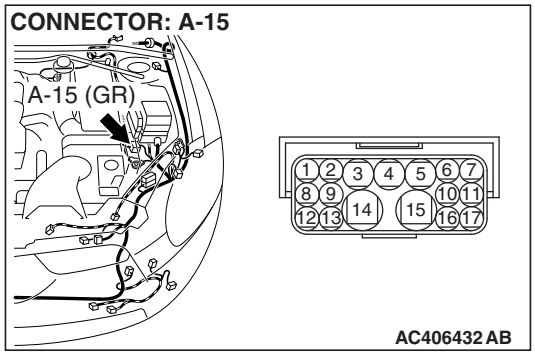

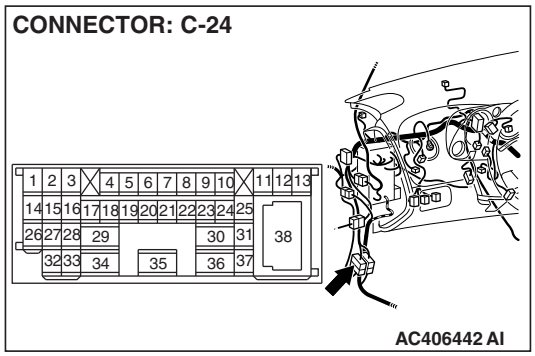

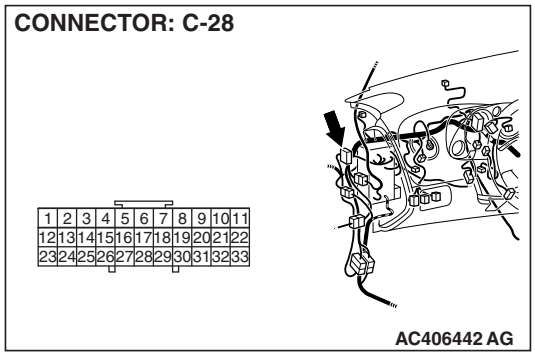

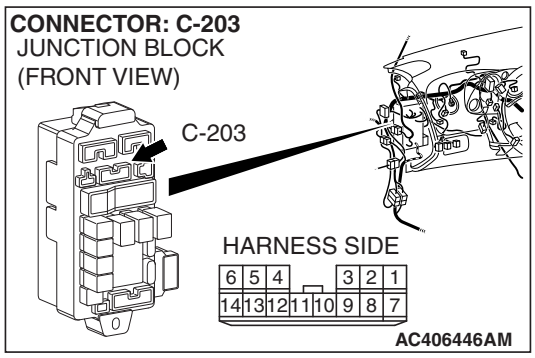

Q: Are the connectors and terminals in good condition?

YES : Go to Step 4.

NO : Repair or replace the damaged components. Refer to GROUP 00E, Harness Connector Inspection P.00E-2.

STEP 4. Check the harness for open circuit or short circuit to ground between the output shaft speed sensor connector B-108 terminal 3 and the junction block connector C-203 terminal 12.

Q: Is the harness wire in good condition?

YES : Go to Step 5.

NO : Repair or replace the harness wire.

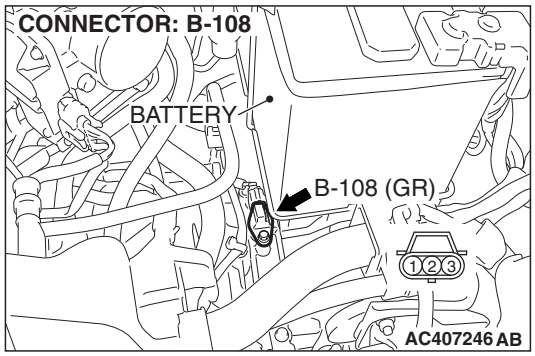

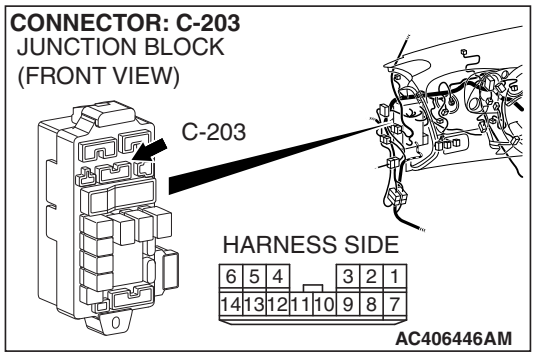

STEP 5. Measure the PCM to speed sensor output voltage at the output shaft speed sensor connector B-108.

(1) Disconnect connector B-108 from the speed sensor and measure voltage at the harness side.

(2) Turn the ignition switch to the "ON" position.

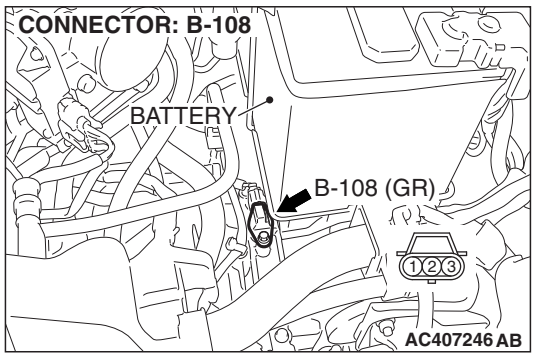

(3) Measure the voltage between terminal 2 and ground.
- The voltage should measure between 4.5 and 4.9 volts.

(4) Turn the ignition switch to the "LOCK" (OFF) position.

Q: Is the measured voltage between 4.5 and 4.9 volts?

YES : Go to Step 11.

NO : Go to Step 6.

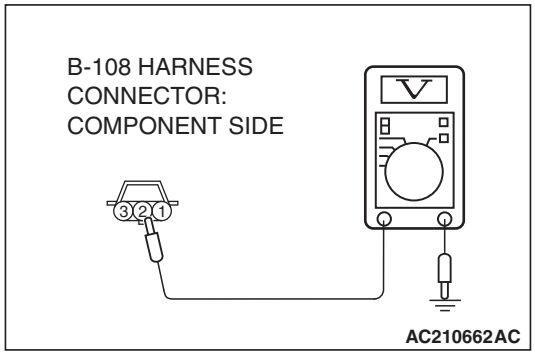

STEP 6. Measure the PCM output voltage to the speed sensor at the PCM connector B-21 by using check harness special tool MB991923.

(1) Disconnect all the connectors from the PCM.

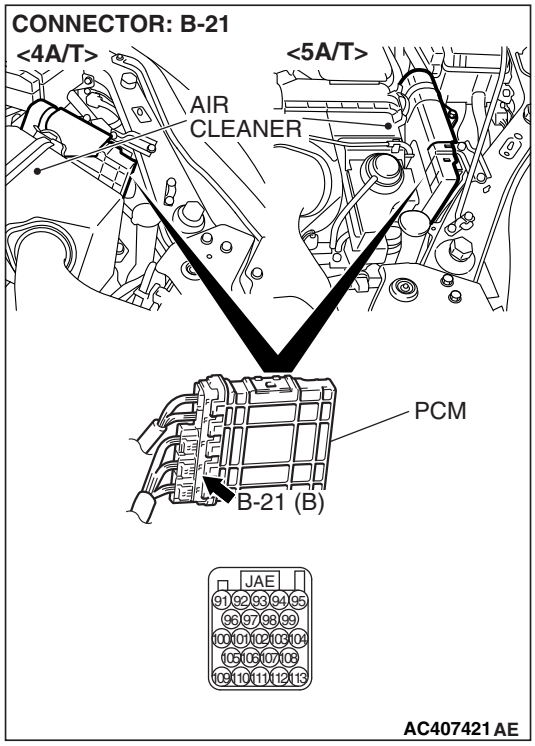

(2) Connect special tool MB991923 (check harness) between the PCM and the body-side harness connector.

(3) Turn the ignition switch to the "ON" position.

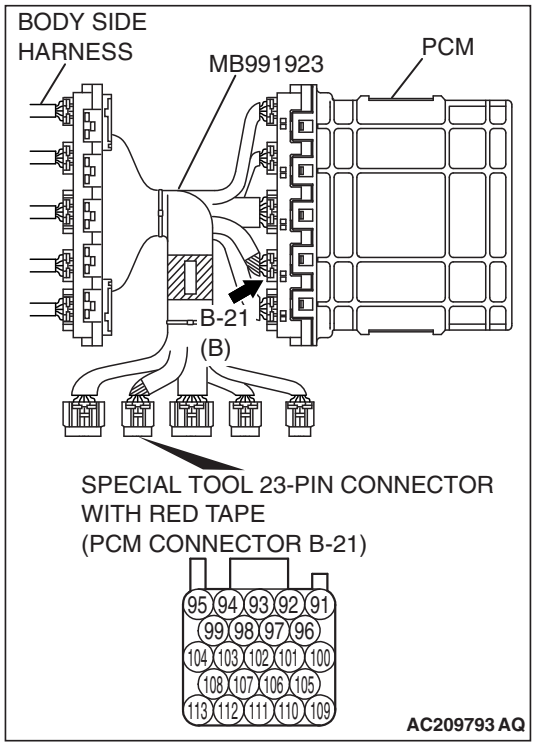

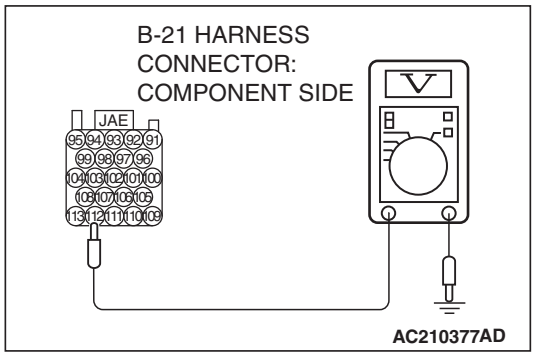

(4) Measure the voltage between terminal 112 and ground.
- The voltage should measure between 4.5 and 4.9 volts.

(5) Turn the ignition switch to the "LOCK" (OFF) position.

Q: Is the measured voltage between 4.5 and 4.9 volts?

YES : Go to Step 7.
NO : Go to Step 9.

STEP 7. Check PCM connector B-21 and output shaft speed sensor connector B-108 for loose, corroded or damaged terminals, or terminals pushed back in the connector.

Q: Are the connectors in good condition?

YES : Go to Step 8.
NO : Repair or replace the damaged components. Refer to GROUP 00E, Harness Connector Inspection P.00E-2.

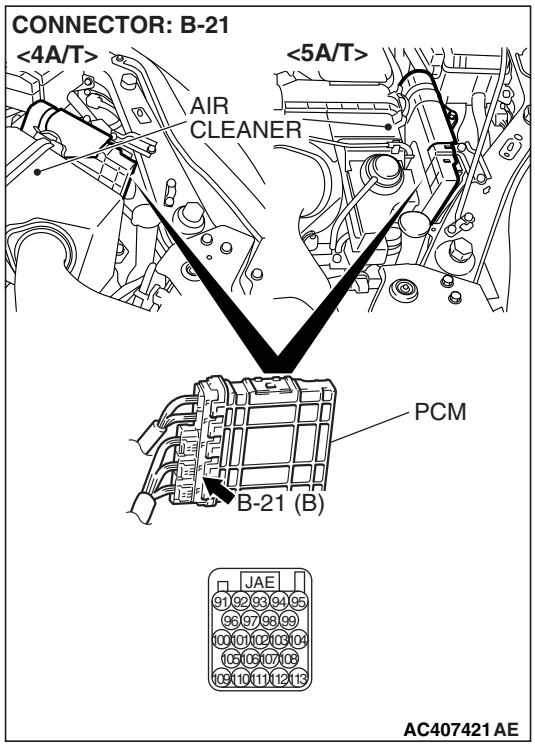

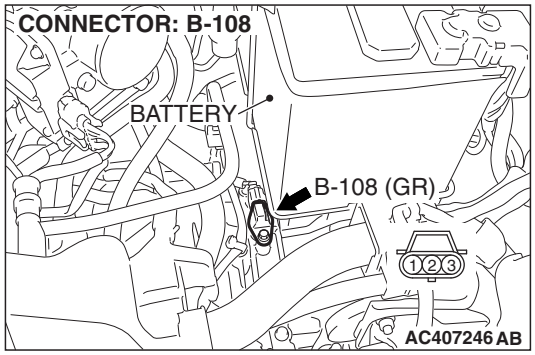

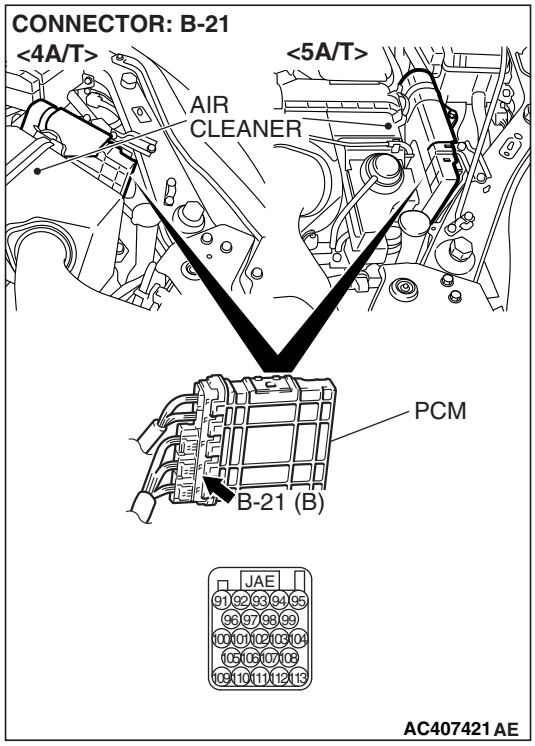

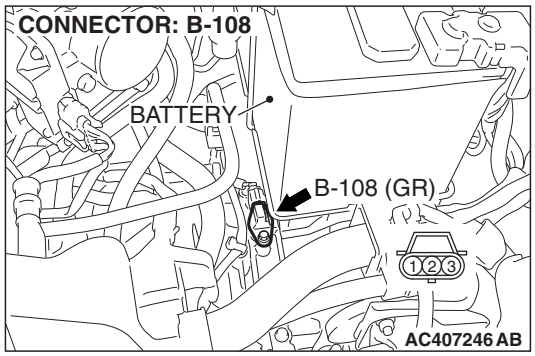

STEP 8. Check the harness for open circuit or damage between PCM connector B-21 terminal 112 and output shaft speed sensor connector B-108 terminal 2.

Q: Is the harness wire in good condition?

YES : Go to Step 19.

NO : Repair or replace the harness wire.

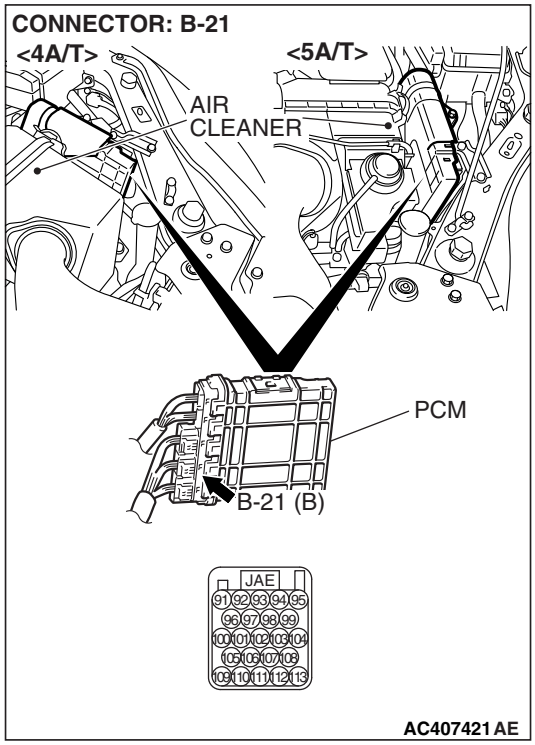

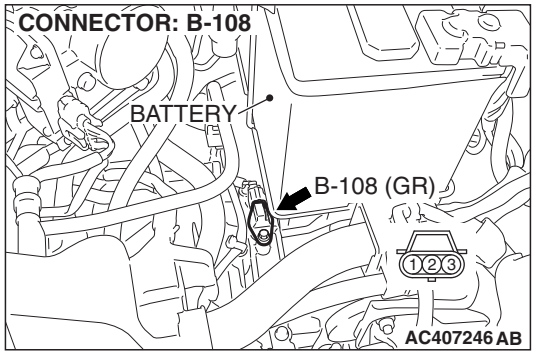

STEP 9. Check PCM connector B-21 and output shaft speed sensor connector B-108 for loose, corroded or damaged terminals, or terminals pushed back in the connector.

Q: Are the connectors and terminals in good condition?

YES : Go to Step 10.

NO : Repair or replace the damages components. Refer to GROUP 00E, Harness Connector Inspection P.00E-2.

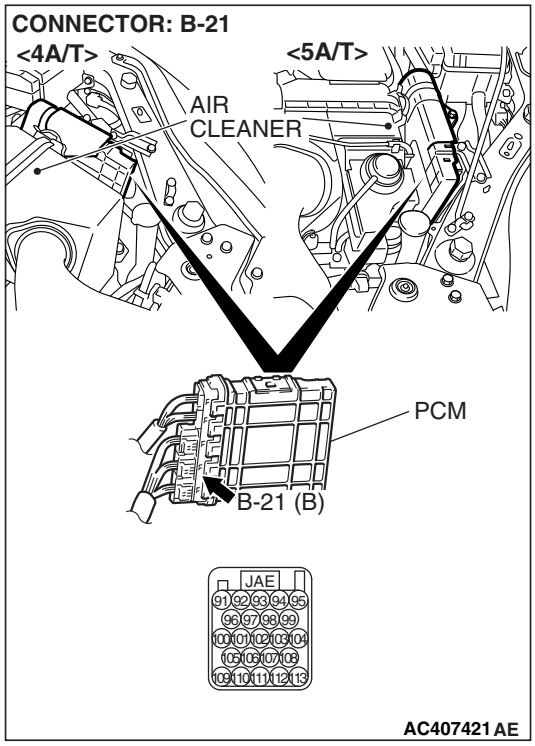

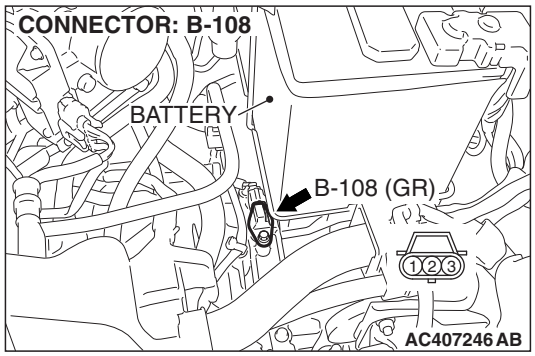

STEP 10. Check the harness for short circuit to ground between PCM connector B-21 terminal 112 and output shaft speed sensor connector B-108 terminal 2.

Q: Is the harness wire in good condition?

YES : Go to Step 11.

NO : Repair or replace the harness wire.

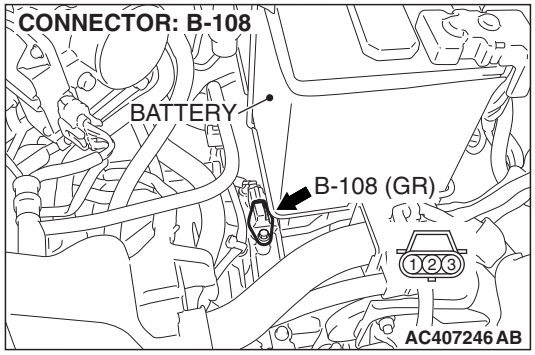

STEP 11. Measure the ground circuit for resistance at the output shaft speed sensor connector B-108.

(1) Disconnect connector B-108 from the speed sensor and measure at the harness side.

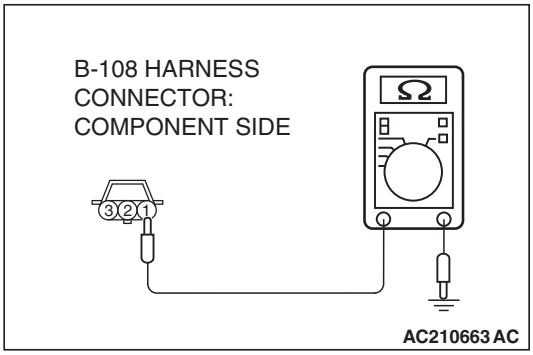

(2) Measure the resistance between terminal 1 and ground.
- The resistance should measure less than 2 ohms.

Q: Is the measured resistance less than 2 ohms?

YES : Go to Step 16.
NO : Go to Step 12.

STEP 12. Measure the resistance at the PCM connector B-21 by using check harness special tool MB991923.

(1) Disconnect all the connectors from the PCM.

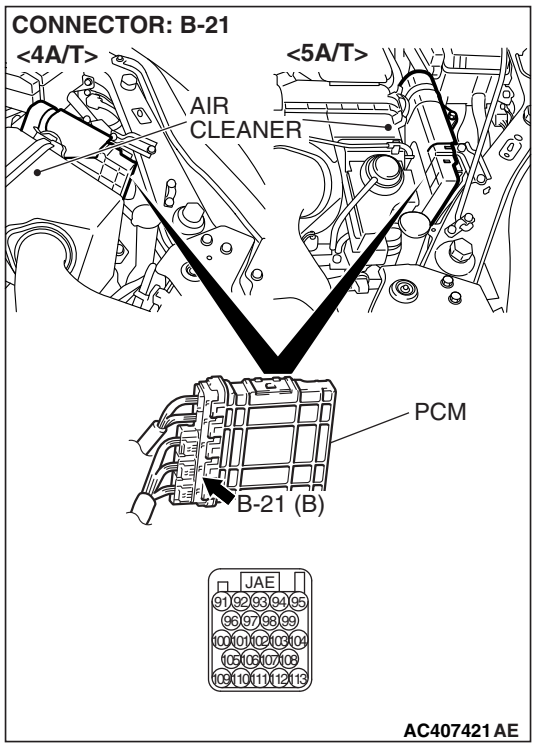

(2) Connect special tool MB991923 (check harness) between the PCM and the body-side harness connector.

(3) Turn the ignition switch to the "ON" position.

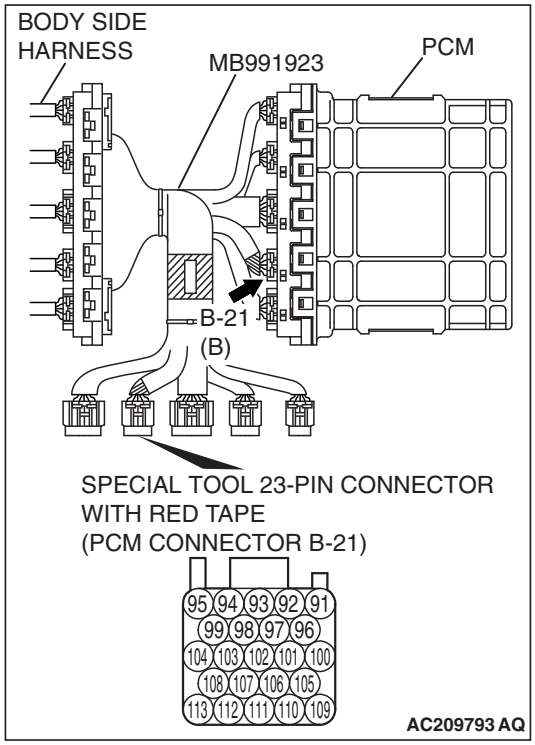

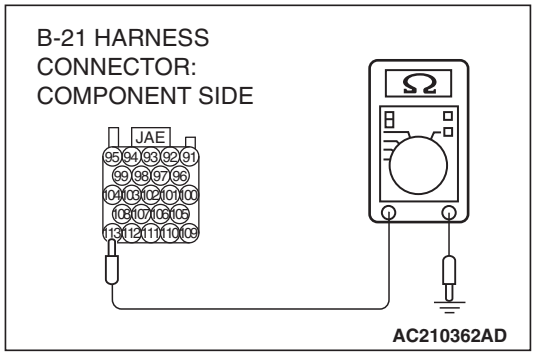

(4) Measure the resistance between terminal 113 and ground.
- The resistance should measure less than 2 ohms.

(5) Turn the ignition switch to the "LOCK" (OFF) position.

Q: Is the measured resistance less than 2 ohms?

YES : Go to Step 13.
NO : Go to Step 15.

STEP 13. Check PCM connector B-21 and output shaft speed sensor connector B-108 for loose, corroded or damaged terminals, or terminals pushed back in the connector.

Q: Are the connectors and terminals in good condition?

YES : Go to Step 14.
NO : Repair or replace the damaged components. Refer to GROUP 00E, Harness Connector Inspection P.00E-2.

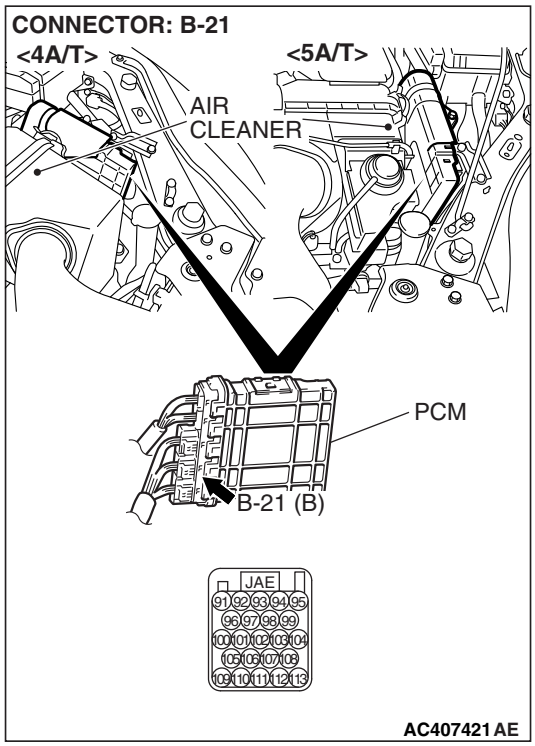

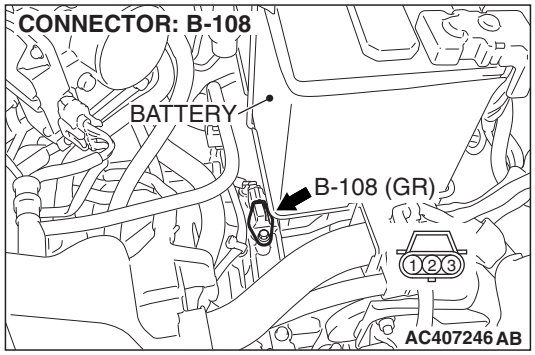

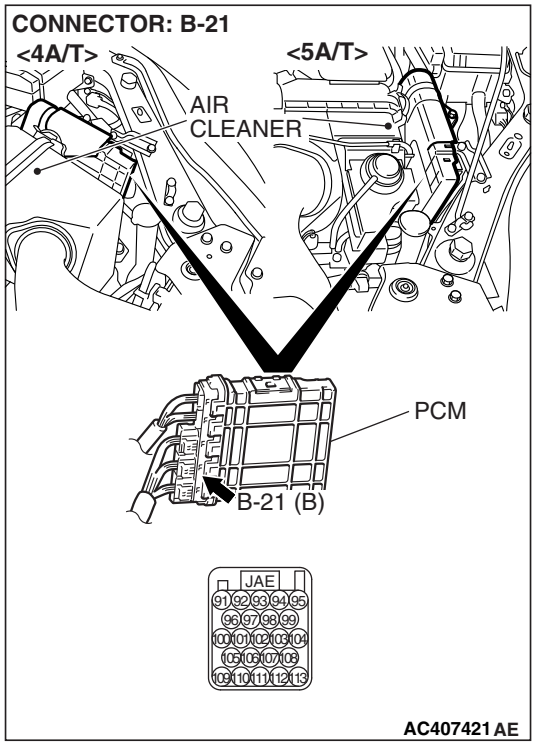

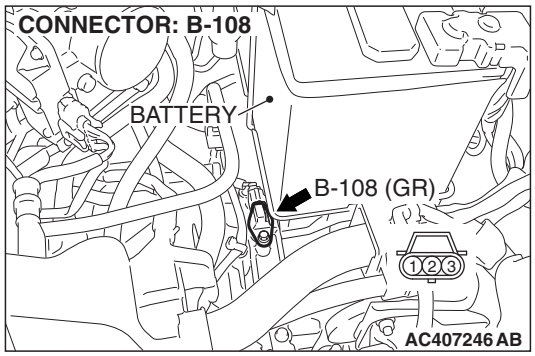

STEP 14. Check the harness for open circuit or damage between PCM connector B-21 terminal 113 and output shaft speed sensor connector B-108 terminal 1.

Q: Is the harness wire in good condition?

YES : Go to Step 16.

NO : Repair or replace the harness wire.

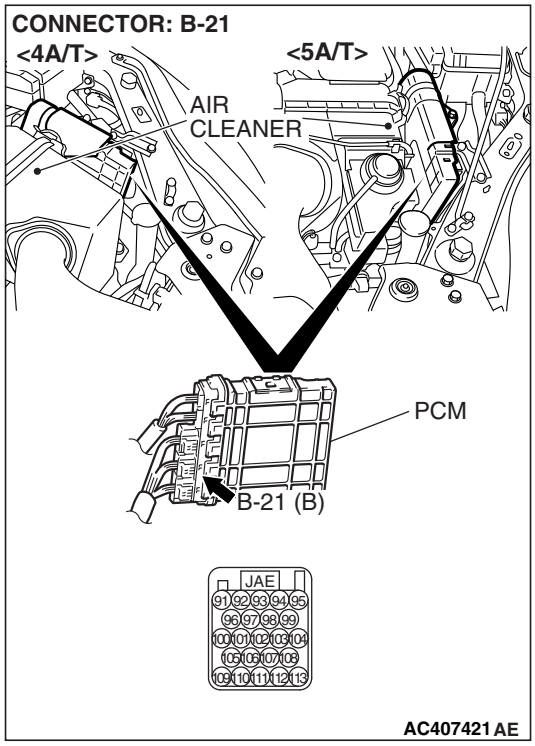

STEP 15. Check PCM connector B-21 for loose, corroded or damaged terminals, or terminals pushed back in the connector.

Q: Are the connector and terminals in good condition?

YES : Replace the PCM. When the PCM is replaced, register the encrypted code. Refer to GROUP 54A, Encrypted Code Registration Criteria Table P.54A-19.

NO : Repair or replace the damaged components. Refer to GROUP 00E, Harness Connector Inspection P.00E-2.

STEP 16. Using the oscilloscope, check the output shaft speed sensor waveform at PCM connectors B-21 by using check harness special tool MB991923.

(1) Disconnect all the connectors from the PCM.

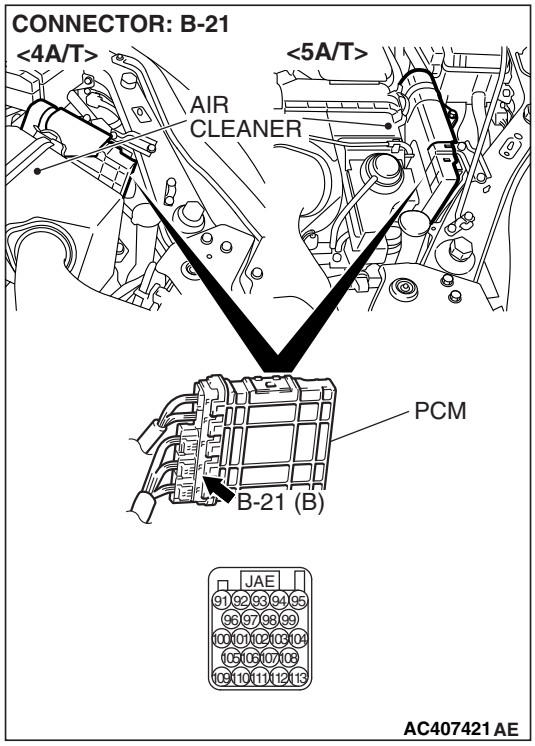

(2) Connect special tool MB991923 (check harness) between the PCM and the body-side harness connector.

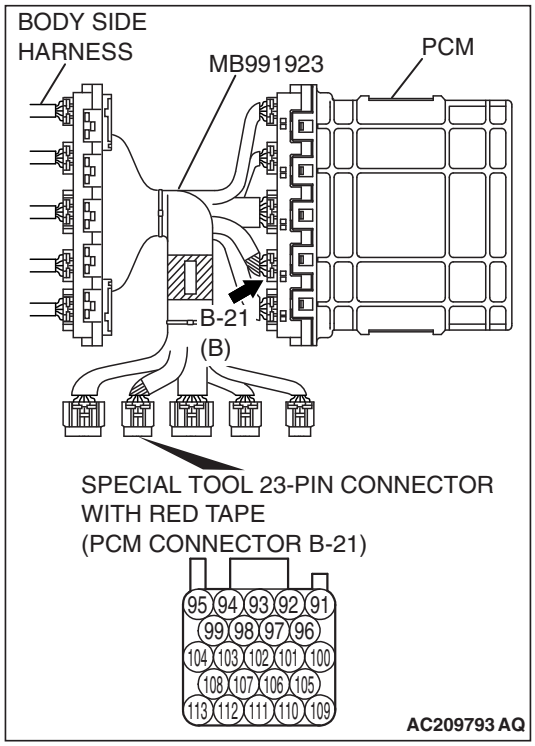

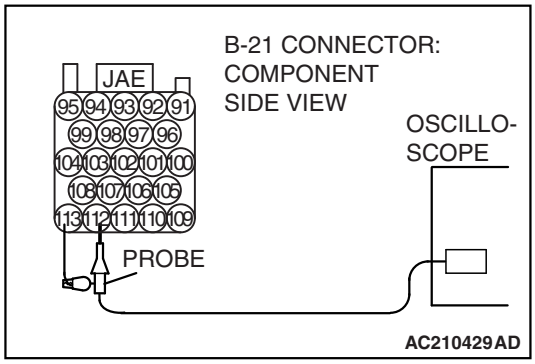

(3) Connect an oscilloscope probe to PCM connector B-21 terminal 112 and 113.
(4) Start the engine and drive the vehicle at constant speed of 50 km/h (31 mph) (Gear range: 3rd gear) <4A/T> or 60 km/h (37 mph) (Gear range: 4th gear) <5A/T>.

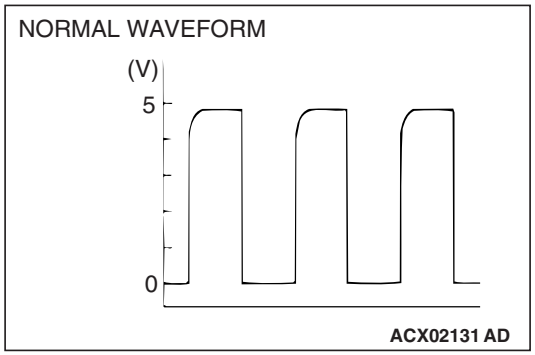

(5) Check the output shaft speed sensor waveform.
- The output shaft speed sensor waveform should show a pattern similar to the illustration. The maximum value should be 4.8 volts or more and the minimum value 0.8 volt or less. The output waveform should not contain electrical noise.

(6) Turn the ignition switch to the "LOCK" (OFF) position.

Q: Is the waveform normal?

YES : Go to Step 19.
NO : Go to Step 17.

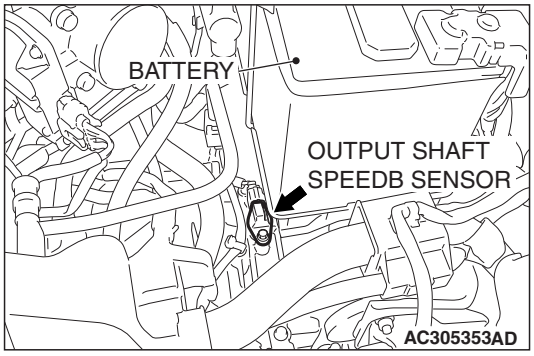

STEP 17. Replace the output shaft speed sensor.

(1) Replace the output shaft speed sensor. Refer to GROUP 23B, P.23B-8 Transaxle <4A/T> or Refer to GROUP 23C, P.23C-8 Transaxle <5A/T>.
(2) Test drive the vehicle.
(3) Check for A/T diagnostic trouble code.

Q: Is A/T DTC P1767 set?

YES : Go to Step 18.
NO : The procedure is complete.

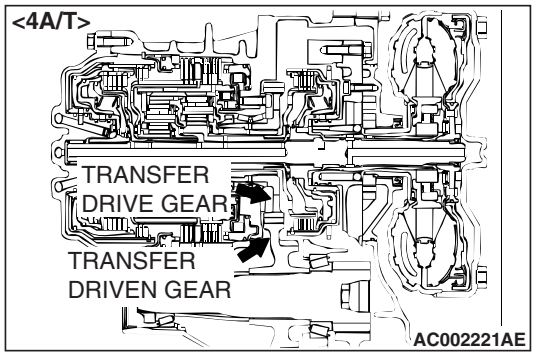

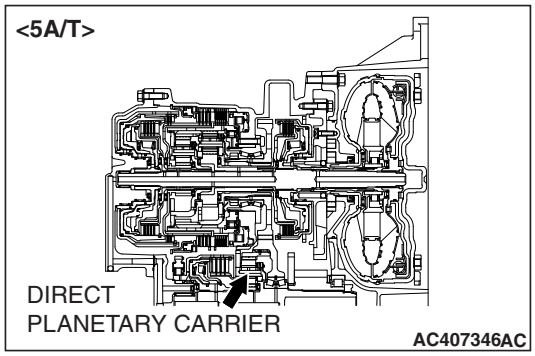

STEP 18. Replace the transfer drive gear, driven gear <4A/T> or direct planetary carrier <5A/T>.

(1) Replace the transfer drive gear or driven gear. Refer to GROUP 23B, Transaxle P.23B-8, Output Shaft P.23B-59 <4A/T> or Refer to GROUP 23C, Direct Planetary carrierP.23C-66 <5A/T>.
(2) Test drive the vehicle.
(3) Check for A/T diagnostic trouble code.

Q: Is A/T DTC P1767 set?

YES : An A/T DTC may have set due to external radio frequency interference (RFI) possibly caused by cellular phone activity, or aftermarket components installed on the vehicle.

NO : The procedure is complete.

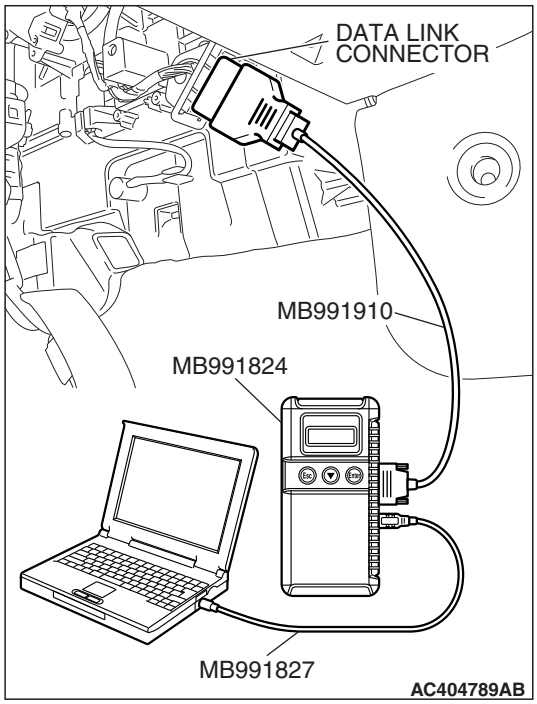

STEP 19. Using scan tool MB991958, check data list item 6: Output Shaft Speed Sensor.

⚠ CAUTION

To prevent damage to scan tool MB991958, always turn the ignition switch to the "LOCK" (OFF) position before connecting or disconnecting scan tool MB991958.

(1) Connect scan tool MB991958 to the data link connector.
(2) Start the engine.
(3) Set scan tool MB991958 to data reading mode.
- Item 6: Output Shaft Speed Sensor.
  - When driving at a constant speed of 50km/h (31mph), the display should be "1,500 – 1,800 r/min" (Gear range: 3rd gear). <4A/T>
  - When driving at a constant speed of 60km/h (37mph), the display should be "1,400 – 1,700 r/min" (Gear range: 4th gear). <5A/T>

(4) Turn the ignition switch to the "LOCK" (OFF) position.

Q: Is the sensor operating properly?

YES : It can be assumed that this malfunction is intermittent. Refer to GROUP 00, How to Use Troubleshooting/Inspection Service Points – How to Cope with Intermittent Malfunction P.00-14.

NO : Replace the PCM. When the PCM is replaced, register the encrypted code. Refer to GROUP 54A, Encrypted Code Registration Criteria Table P.54A-19.

DTC P1769: Stoplight Switch System

Stoplight Switch System Circuit

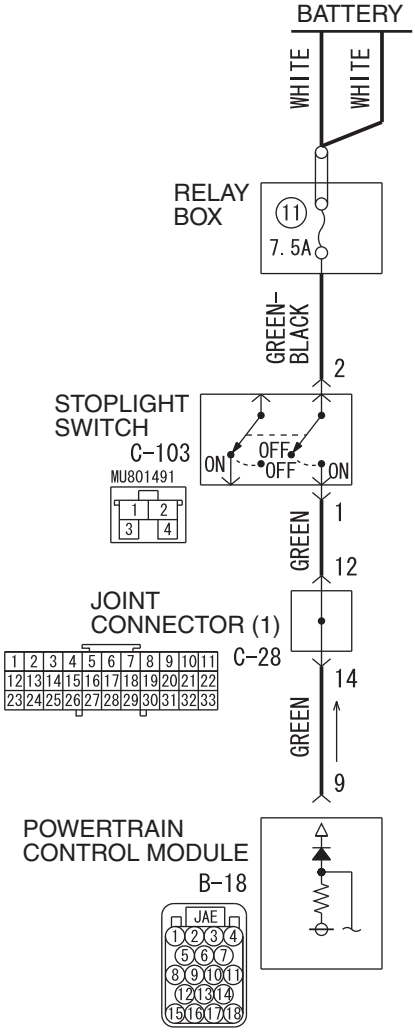

AC808345 AB

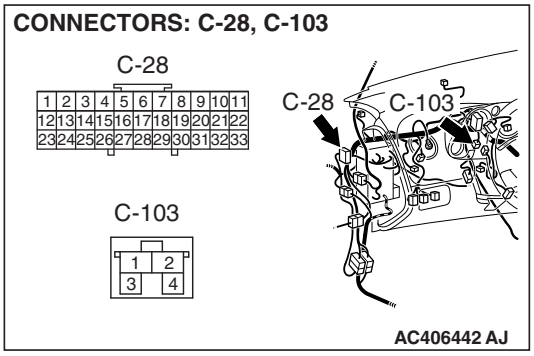

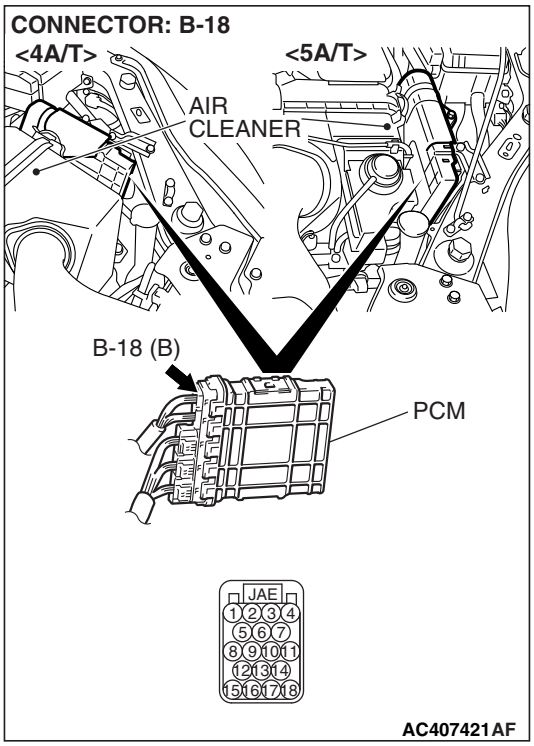

CIRCUIT OPERATION

- Battery positive voltage is supplied to the stop-light switch (terminal 2).
- When the brake pedal is depressed, battery positive voltage is applied to the PCM (terminal 9).

DTC SET CONDITIONS

If the stoplight switch is on for five minutes or more while driving above 50 km/h (31 mph), or all of the stop light bulbs are blown, it is judged there is a short circuit or open circuit in the stoplight switch. This causes DTC P1769 to be set.

TROUBLESHOOTING HINTS (THE MOST LIKELY CAUSES FOR THIS CODE TO BE SET ARE:)

- Malfunction of the stoplight switch
- Malfunction of stoplight valve
- Damaged harness or connector
- Malfunction of the PCM

DIAGNOSIS

Required Special Tools:

- MB991958: Scan Tool (M.U.T.-III Sub Assembly)
  - MB991824: V.C.I.
  - MB991827: M.U.T.-III USB Cable
  - MB991910: M.U.T.-III Main Harness A

STEP 1. Check the brake pedal height.

Refer to GROUP 35A, On-vehicle Service – Brake Pedal Check and Adjustment P.35A-13.

Q: Is the height adjusted properly?

YES : Go to Step 2.
NO : Adjust the brake pedal to the proper height.

STEP 2. Check the stoplight valve.

Refer to GROUP 54A, Rear combination light P.54A-152.

Q: Is the stoplight valve in good condition?

YES : Go to Step 3.

NO : Replace the stoplight switch. Refer to GROUP 35A, Brake Pedal P.35A-24.

STEP 3. Using scan tool MB991958, check data list item 19: Stoplight Switch.

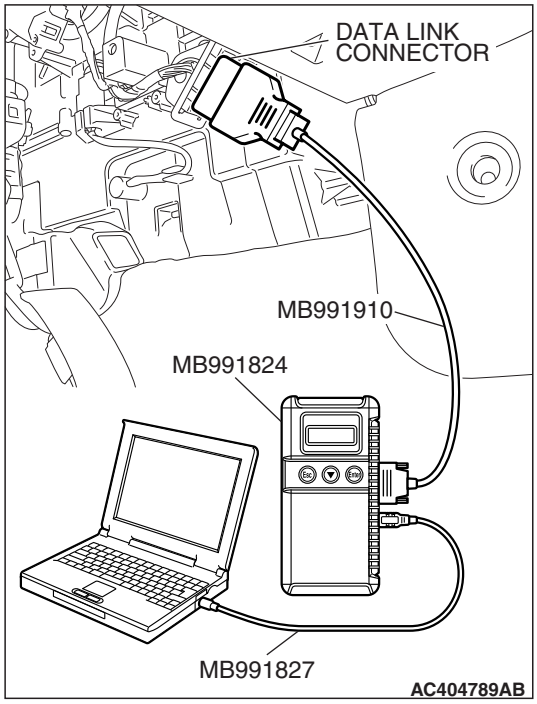

⚠ CAUTION

To prevent damage to scan tool MB991958, always turn the ignition switch to the "LOCK" (OFF) position before connecting or disconnecting scan tool MB991958.

(1) Connect scan tool MB991958 to the data link connector.

(2) Turn the ignition switch to the "ON" position.

(3) Set scan tool MB991958 to the data reading mode.

- Item 19: Stoplight Switch.
  - When the brake pedal is depressed, the display on scan tool MB991958 should be "ON."
  - When the brake pedal is not depressed, the display on scan tool MB991958 should be "OFF."

(4) Turn the ignition switch to the "LOCK" (OFF) position.

Q: Is the switch operating properly?

YES : It can be assumed that this malfunction may be intermittent. Refer to GROUP 00, How to Use Troubleshooting/Inspection Service Points – How to Cope with Intermittent Malfunction P.00-14.

NO : Go to Step 4.

STEP 4. Measure the stoplight switch power supply voltage at connector C-103 by backprobing.

(1) Remove the stoplight switch from the mounting bracket.
(2) Do not disconnect connector C-103.

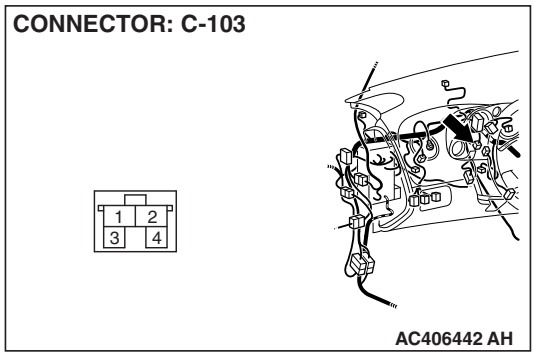

(3) Measure the voltage between terminal 2 and ground by backprobing.
- The voltage should measure battery positive voltage.

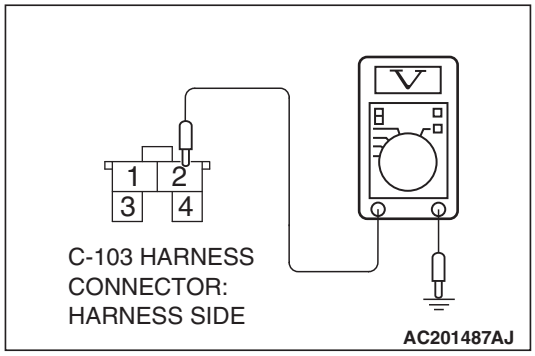

Q: Is the measured voltage battery positive voltage?

YES : Go to Step 7.
NO : Go to step 5.

STEP 5. Check stoplight switch connector C-103 for loose, corroded or damaged terminals, or terminals pushed back in the connector.

Q: Are the connector and terminals in good condition?

YES : Go to Step 6.
NO : Repair or replace the damaged components. Refer to GROUP 00E, Harness Connector Inspection P.00E-2.

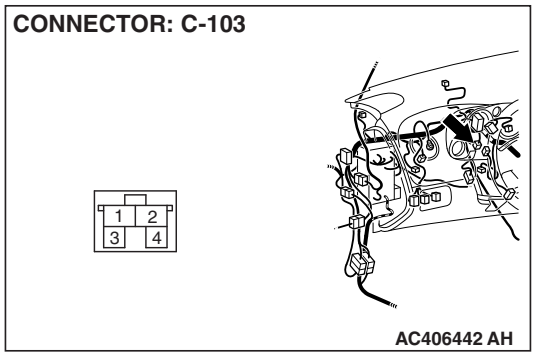

STEP 6. Check the harness for damage between stoplight switch connector C-103 terminal 2 and the power supply fuse.

Q: Is the harness wire in good condition?

YES : Go to Step 7.
NO : Repair or replace the harness wire.

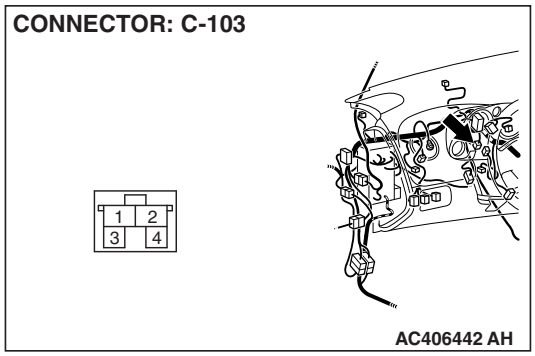

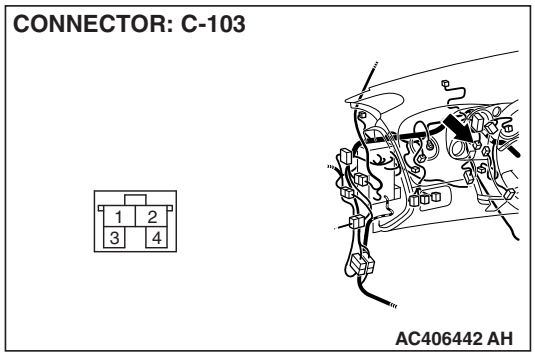

STEP 7. Measure the stoplight switch output voltage to the PCM at connector C-103 by backprobing.

(1) Remove the stoplight switch from the mounting bracket.
(2) Do not disconnect connector C-103.

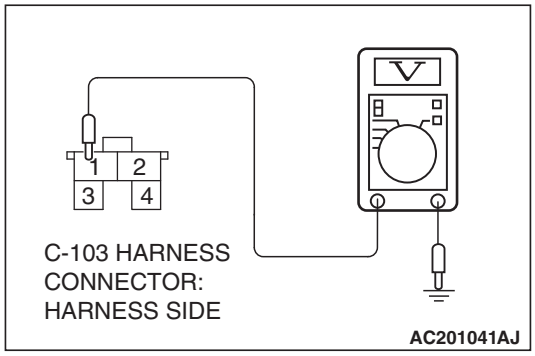

(3) Measure the voltage between terminal 1 and ground by backprobing.
- When the switch button is out (closed circuit), voltage should equal battery positive voltage.
- When the switch button is depressed (open circuit), voltage should measure less than 1.0 volt.

Q: Is the measured voltage battery positive voltage with the switch button released (closed circuit), and less than 1.0 volt with the switch button depressed (open circuit)?

YES : Go to Step 9.
NO : Go to Step 8.

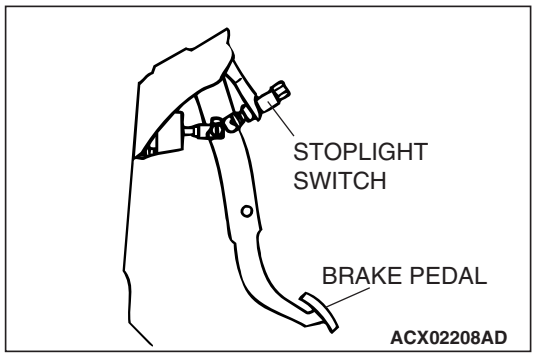

STEP 8. Check the stoplight switch.

Refer to GROUP 35A, On-vehicle Service – Stoplight Switch Check P.35A-25.

Q: Does the stoplight switch pass the checks?

YES : Go to Step 9.
NO : Replace the stoplight switch. Refer to GROUP 35A, Brake Pedal P.35A-24.

STEP 9. Measure the stoplight switch output voltage at the PCM connector B-18 by using check harness special tool MB991923.

(1) Install the stoplight switch into the mounting bracket if it was removed.

(2) Disconnect all the connectors from the PCM.

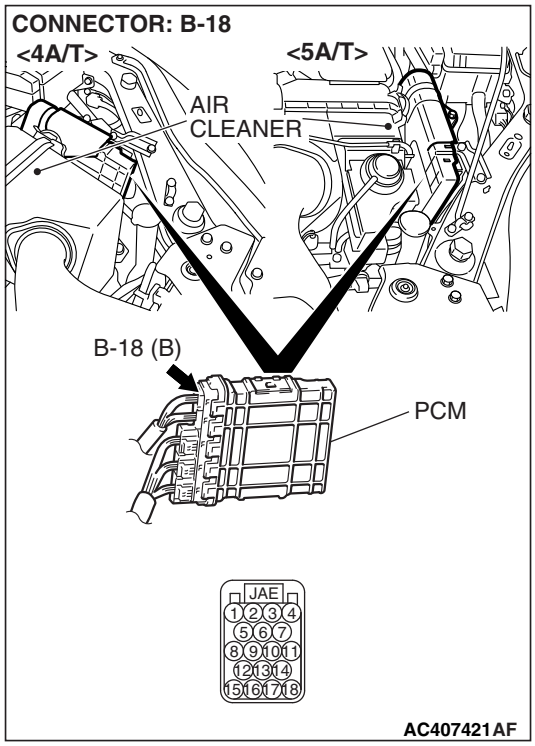

(3) Connect special tool MB991923 (check harness) between the PCM and the body-side harness connector.

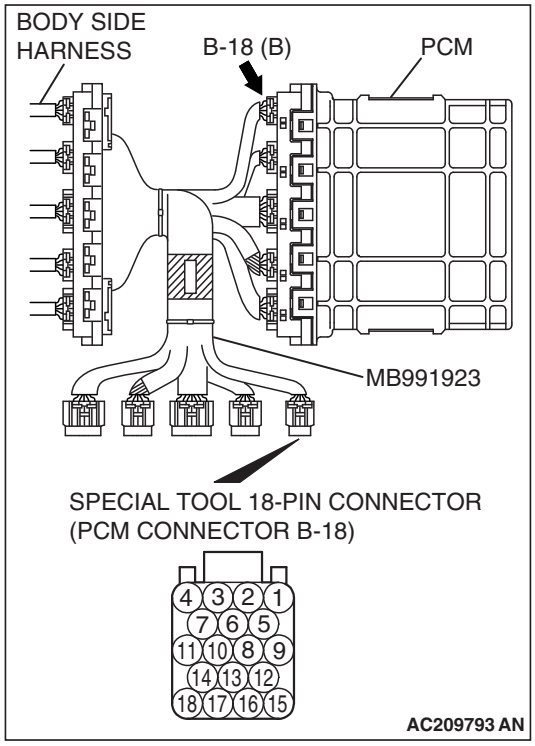

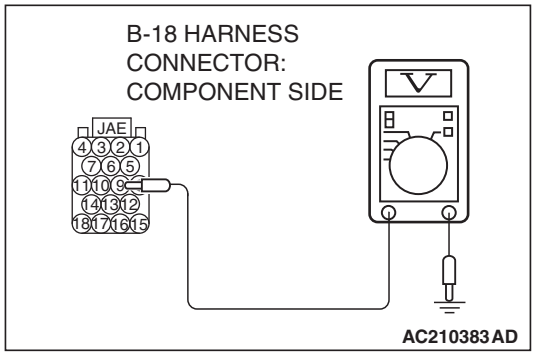

(4) Measure the voltage between terminal 9 and ground.
- When the brake pedal is depressed, voltage should measure battery positive voltage.
- When the brake pedal is not depressed, voltage should measure less than 1.0 volt.

Q: Is the measured voltage battery positive voltage with the brake pedal depressed (closed circuit), and less than 1.0 volt with the brake pedal released (open circuit)?

YES : Go to Step 12.
NO : Go to Step 10.

STEP10. Check PCM connector B-18 and joint connector (1) C-28 for loose, corroded or damaged terminals, or terminals pushed back in the connector.

Q: Are the connectors and terminals in good condition?

YES : Go to Step 11.
NO : Repair or replace the damaged components. Refer to GROUP 00E, Harness Connector Inspection P.00E-2.

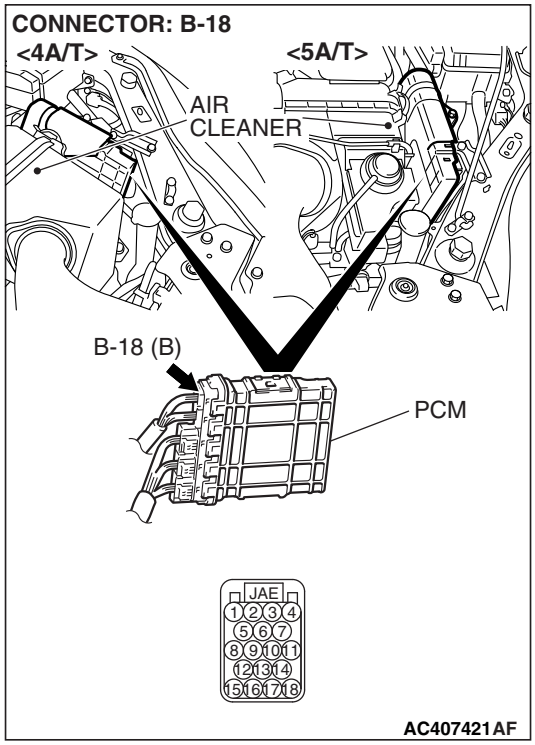

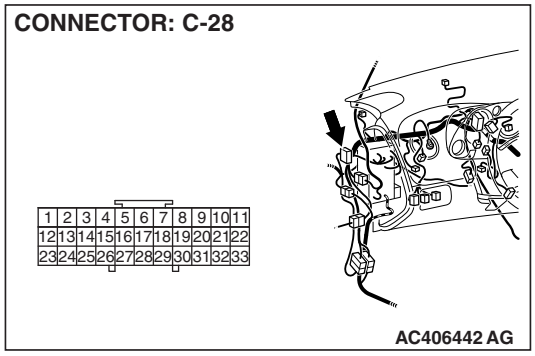

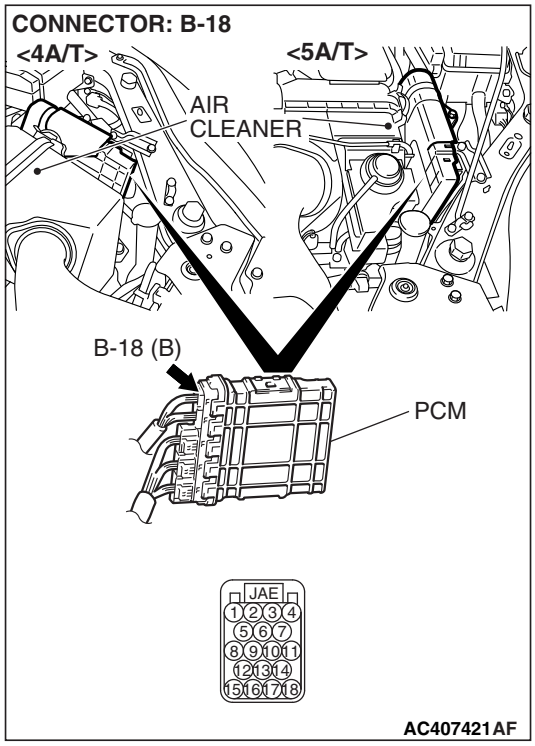

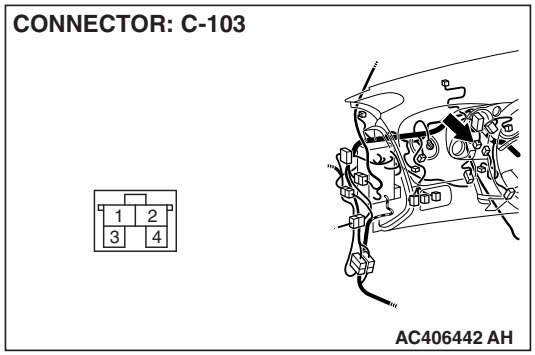

STEP 11. Check the harness for damage between PCM connector B-18 terminal 9 and stoplight switch connector C-103 terminal 1.

Q: Is the harness wire in good condition?

YES : Go to Step 12.

NO : Repair or replace the harness wire.

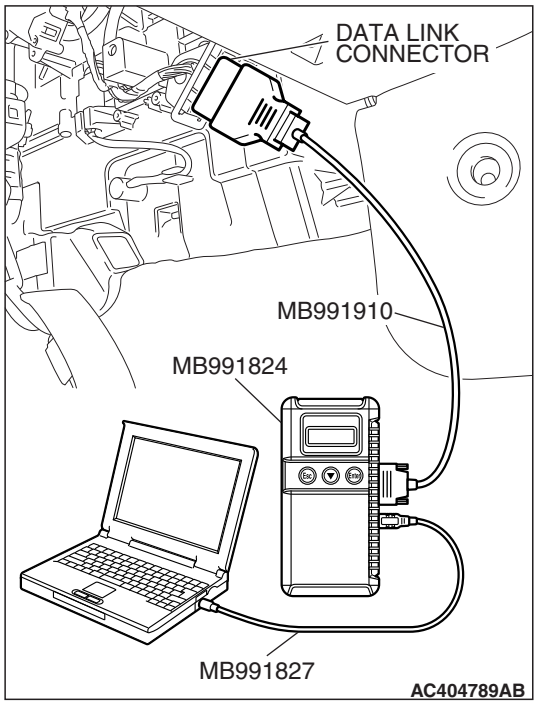

STEP 12. Using scan tool MB991958, check data list item 19: Stoplight Switch.

⚠ CAUTION

To prevent damage to scan tool MB991958, always turn the ignition switch to the "LOCK" (OFF) position before connecting or disconnecting scan tool MB991958.

(1) Connect scan tool MB991958 to the data link connector.
(2) Turn the ignition switch to the "ON" position.
(3) Set scan tool MB991958 to the data reading mode.
- Item 19: Stoplight Switch.
  - When the brake pedal is depressed, the display on scan tool MB991958 should be "ON."
  - When the brake pedal is not depressed, the display on scan tool MB991958 should be "OFF."

(4) Turn the ignition switch to the "LOCK" (OFF) position.

Q: Is the switch operating properly?

YES : It can be assumed that this malfunction may be intermittent. Refer to GROUP 00, How to Use Troubleshooting/Inspection Service Points – How to Cope with Intermittent Malfunction P.00-14.

NO : Replace the PCM. When the PCM is replaced, register the encrypted code. Refer to GROUP 54A, Encrypted Code Registration Criteria Table P.54A-19.

DTC P1770 (P0705): Transmission Range Switch System (Open Circuit)

⚠ CAUTION

If DTC P1770 (P0705) has been set, TCL related DTC C1397 is also set. After DTC P1770 (P0705) has been diagnosed, don't forget to erase DTC C1397.

Transmission Range Switch System Circuit

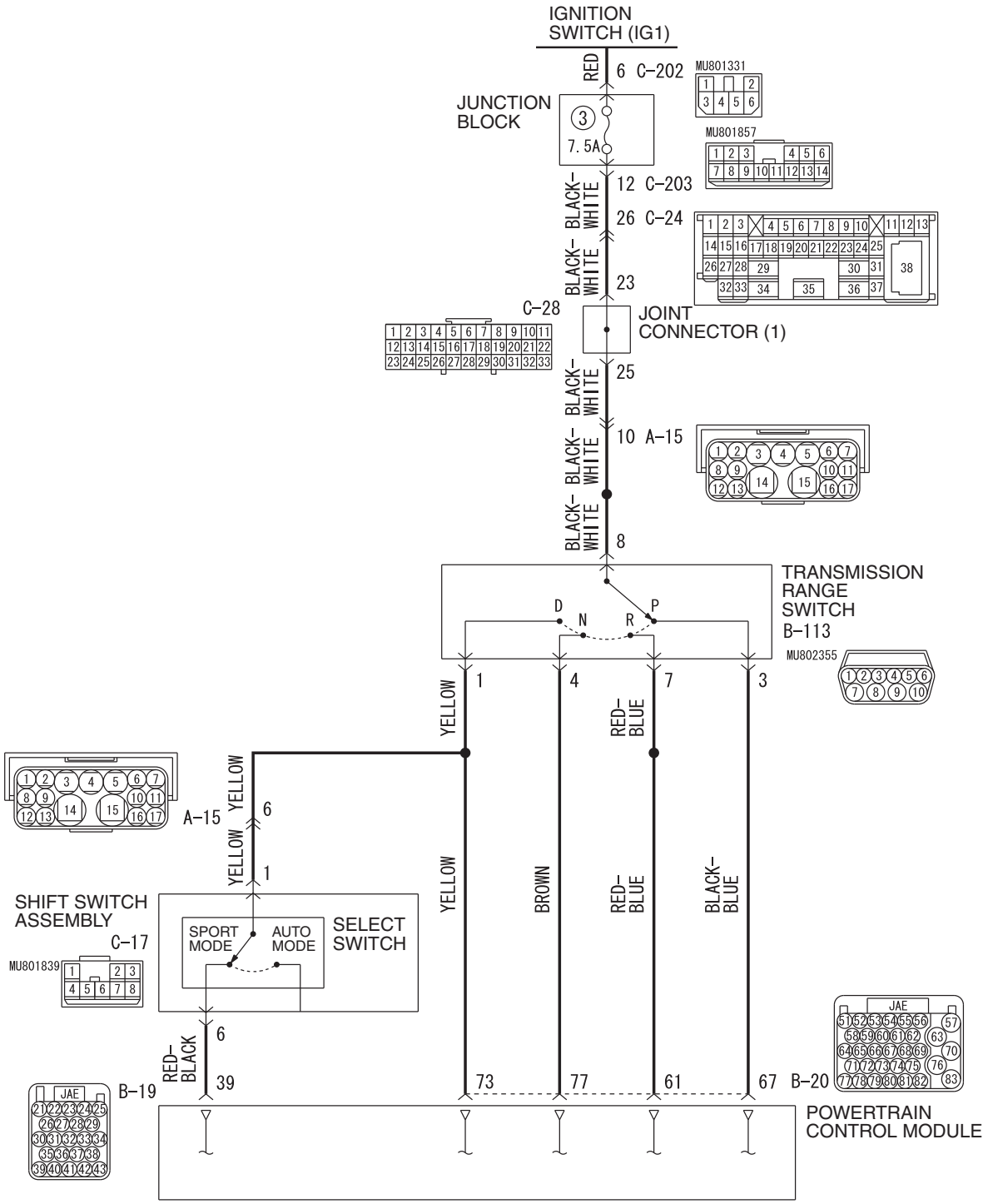

TSB Revision

CONNECTOR: A-15

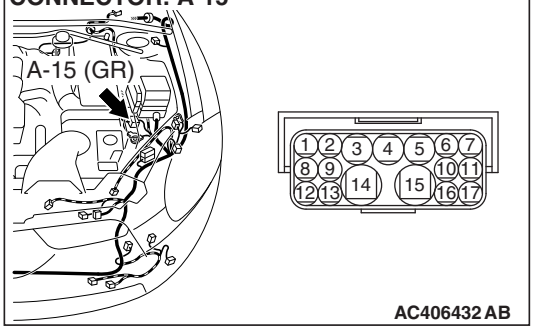

CONNECTORS: B-19, B-20

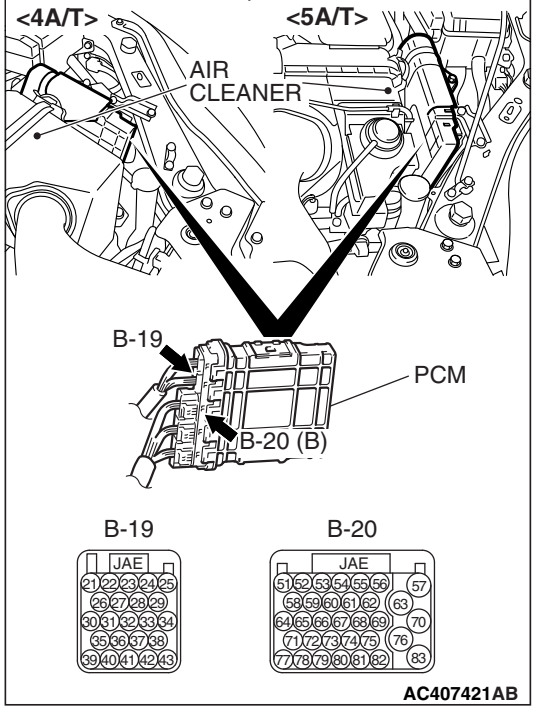

CONNECTOR: B-113

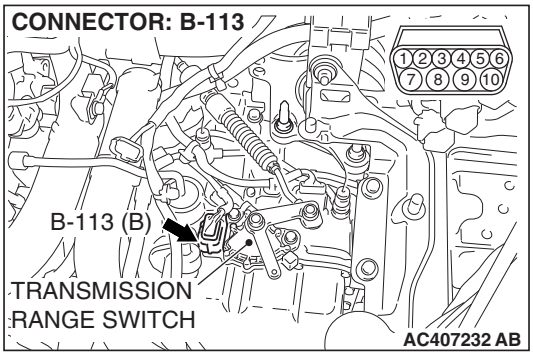

CONNECTOR: C-17

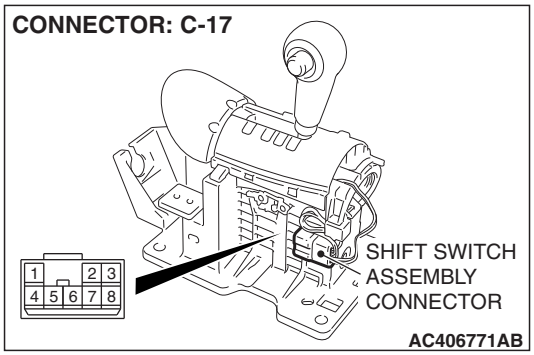

CONNECTOR: C-24

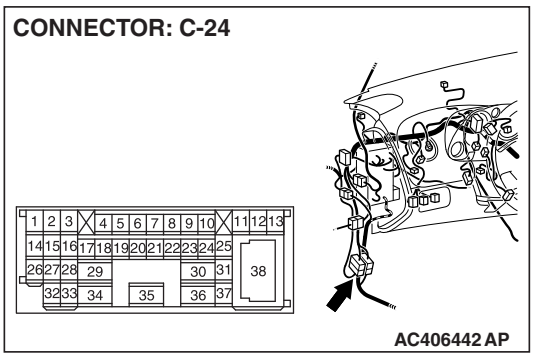

CONNECTOR: C-28

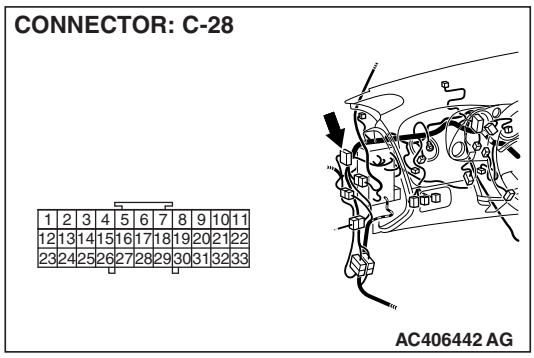

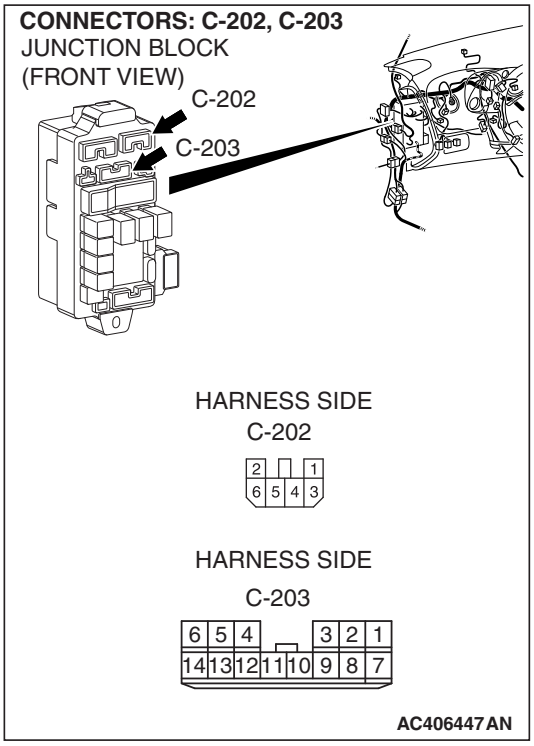

CIRCUIT OPERATION

- Battery positive voltage is applied to the transmission range switch (terminal 8) when the ignition switch is turned "ON."
- Battery positive voltage is applied to the PCM (terminal 67) when the transmission range is in the "P" range. The PCM judges that the transmission range is in the "P" range when the battery positive voltage is applied.
- Battery positive voltage is applied to the PCM terminal 61 (77, 73) when the selector lever is in the "R" range ("N," "D" range). The PCM judges that the selector lever is in the "R" range ("N," "D" range) when the battery positive voltage is applied.

DESCRIPTIONS OF MONITOR METHODS

- If no signal is input from transmission range switch for more than 30 seconds, PCM judges that transmission range switch has a failure.

MONITOR EXECUTION

- Continuous

MONITOR EXECUTION CONDITIONS (OTHER MONITOR AND SENSOR)

Other Monitor (There is no temporary DTC stored in memory for the item monitored below)

- Not applicable

Sensor (The sensor below is determined to be normal)

- Not applicable

LOGIC FLOW CHARTS (Monitor Sequence)

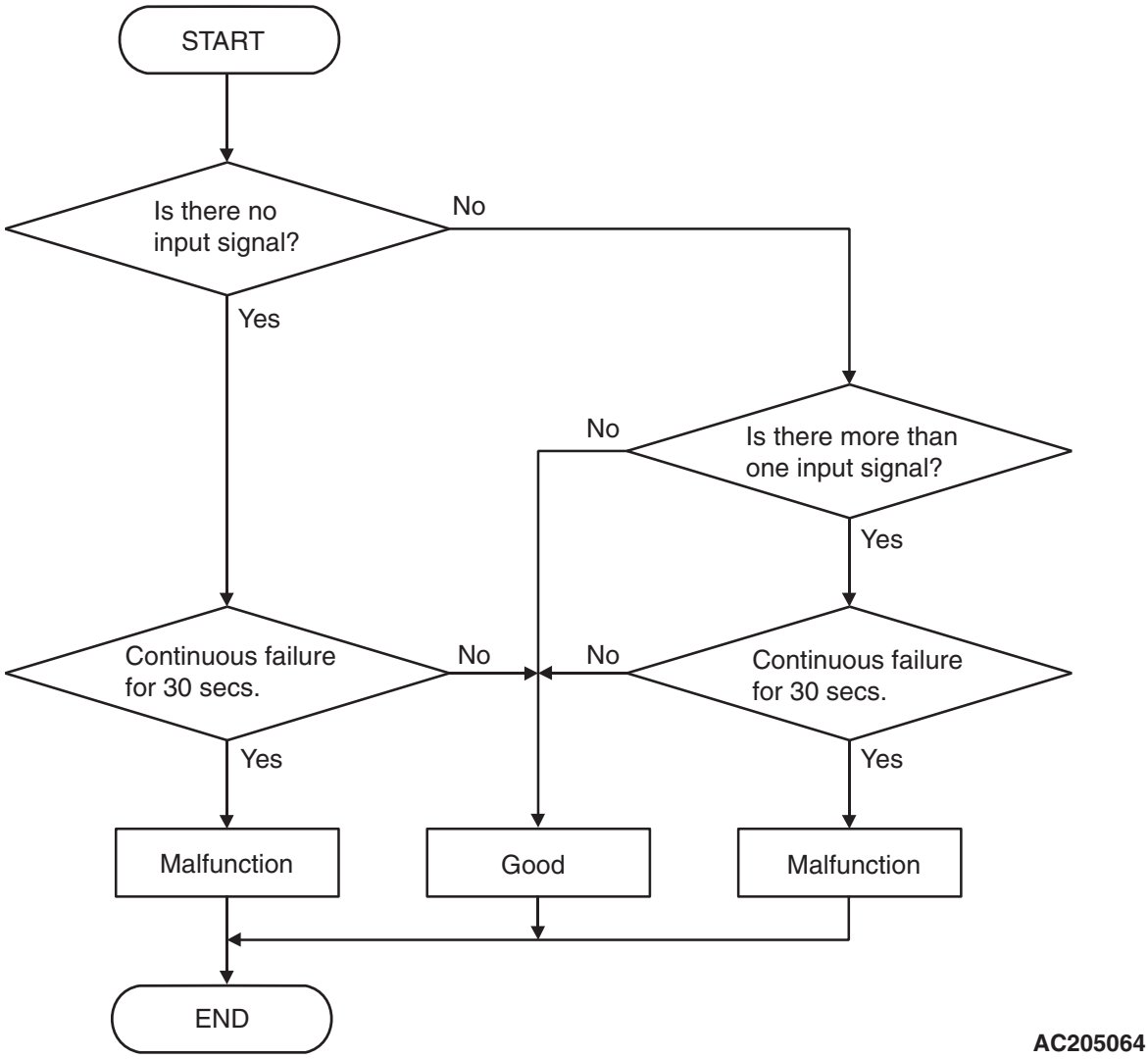

DTC SET CONDITIONS

Check Conditions, Judgment Criteria

- Transmission range switch: no signal detected. (30 seconds)

OBD-II DRIVE CYCLE PATTERN

Start the engine, keep the vehicle stopped in "P," "R," "N," "D" ranges respectively for more than one minute, and turn "LOCK" (OFF) the ignition switch. Then restart the engine, and stop the vehicle in "P," "R," "N," "D" ranges respectively for more than one minute.

TROUBLESHOOTING HINTS (THE MOST LIKELY CAUSES FOR THIS CODE TO BE SET ARE:)

- Malfunction of the transmission range switch
- Malfunction of the ignition switch
- Damaged harness or connector
- Malfunction of the PCM

DIAGNOSIS

Required Special Tools:

- MB991958: Scan Tool (M.U.T.-III Sub Assembly)
  - MB991824: V.C.I.
  - MB991827: M.U.T.-III USB Cable
  - MB991910: M.U.T.-III Main Harness A

STEP 1. Using scan tool MB991958, check data list item 34: Transmission Range Switch.

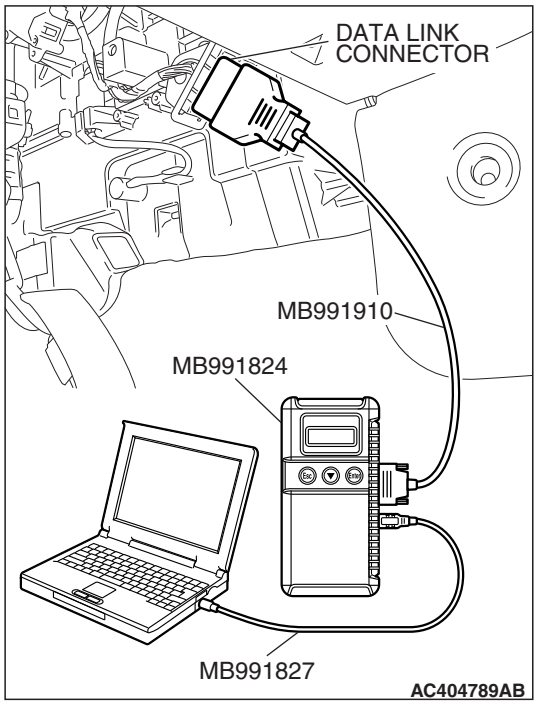

⚠ CAUTION

To prevent damage to scan tool MB991958, always turn the ignition switch to the "LOCK" (OFF) position before connecting or disconnecting scan tool MB991958.

(1) Connect scan tool MB991958 to the data link connector.
(2) Turn the ignition switch to "ON" position.
(3) Set scan tool MB991958 to the data reading mode.
- Item 34: Transmission Range Switch.
  - Move the selector lever to "P," "R," "N," "D" and sport mode positions and confirm that the selected transmission range match the positions shown on scan tool MB991958. (The scan tool displays "D" range when the selector lever is shifted to the sport mode).

(4) Turn the ignition switch to the "LOCK" (OFF) position.

Q: Does the scan tool indication correspond to the actual transmission range?

YES : It can be assumed that this malfunction is intermittent. Refer to GROUP 00, How to Use Troubleshooting/Inspection Service Points – How to Cope with Intermittent Malfunction P.00-14.

NO (no correct transmission range is displayed) : Go to Step 2.

NO (Only "P" position is not displayed correctly) : Go to Step 6.

NO (Only "R" position is not displayed correctly) : Go to Step 12.

NO (Only "N" position is not displayed correctly) : Go to Step 17.

NO (Only "D" position is not displayed correctly) : Go to Step 22.

NO [Only sport mode position is not displayed correctly ("D" is not displayed.)] : Go to Step 29.

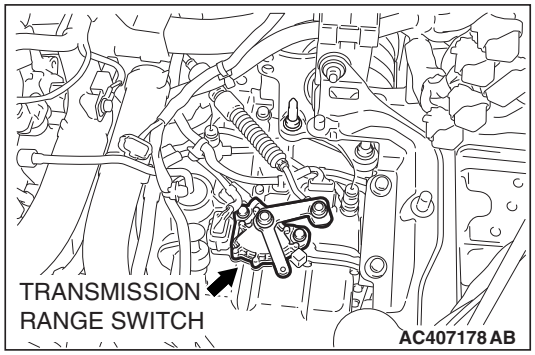

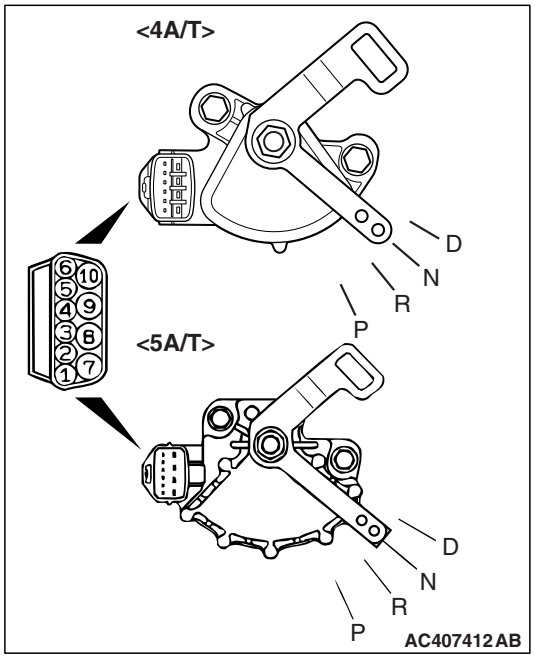

STEP 2. Check the transmission range switch.

Measure the resistance between the terminals for each transmission range as indicated in the table below.

TRANSMISSION RANGE	TERMINAL CONNECTION OF TESTER	SPECIFIED CONDITION
P	3 – 8, 9 – 10	Less than 2 ohms.
R	7 – 8	
N	4 – 8, 9 – 10	
D	1 – 8	

NOTE: For vehicles with sport mode, four positions (P, R, N, D) are used.

Q: Does the resistance measure less than 2 ohms for each transmission range?

YES : Go to Step 3.

NO : Replace the transmission range switch. Refer to GROUP 23B, P.23B-8 Transaxle <4A/T> or Refer to GROUP 23C, P.23C-8 Transaxle <5A/T>.

STEP 3. Check intermediate connector A-15, C-24, transmission range switch connector B-113, joint connector (1) C-28 and junction block connector C-203 for loose, corroded or damaged terminals, or terminals pushed back in the connector.

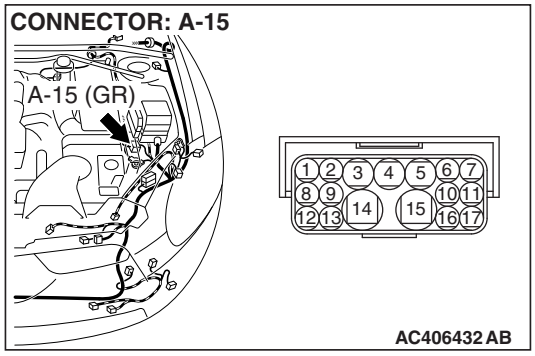

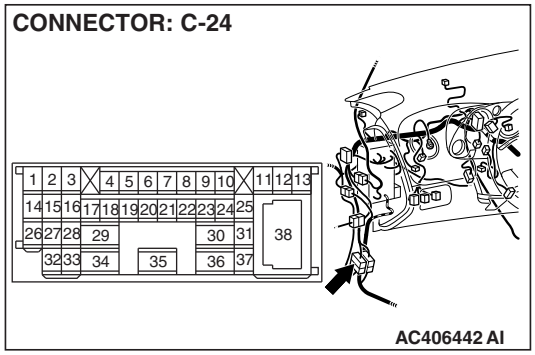

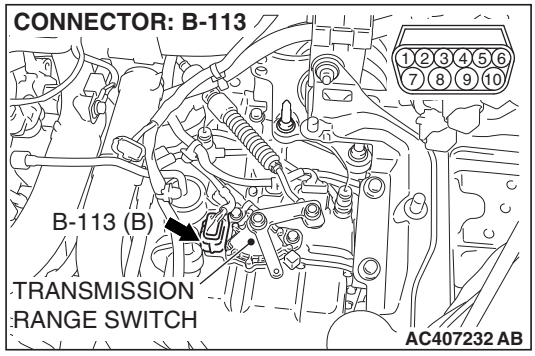

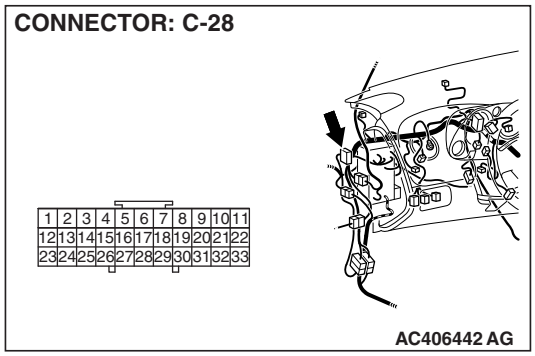

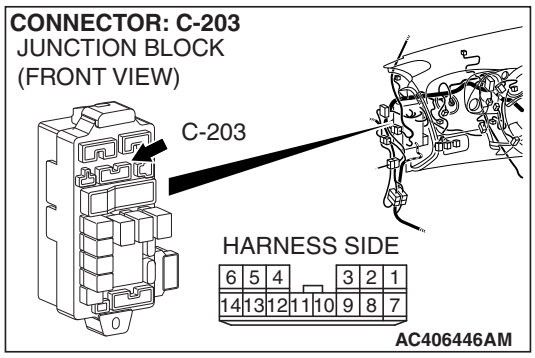

Q: Are the connectors and terminals in good condition?

YES : Go to Step 4.

NO : Repair or replace the damaged components. Refer to GROUP 00E, Harness Connector Inspection P.00E-2.

STEP 4. Check harness for open or short circuit to ground between transmission range switch connector B-113 terminal 8 and junction block connector C-203 terminal 12.

Q: Is the harness wire in good condition?

YES : Go to Step 5.

NO : Repair or replace the harness wire.

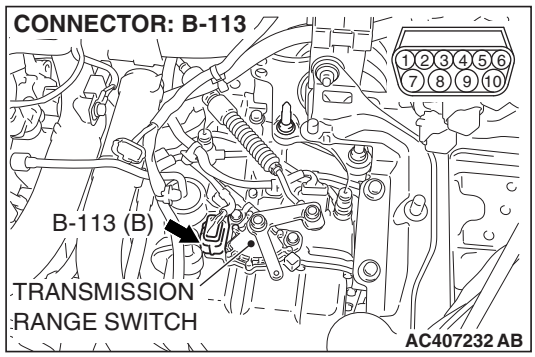

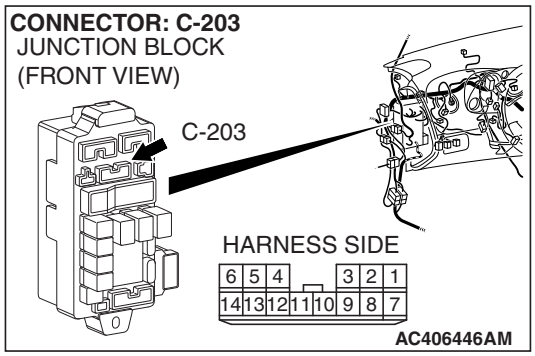

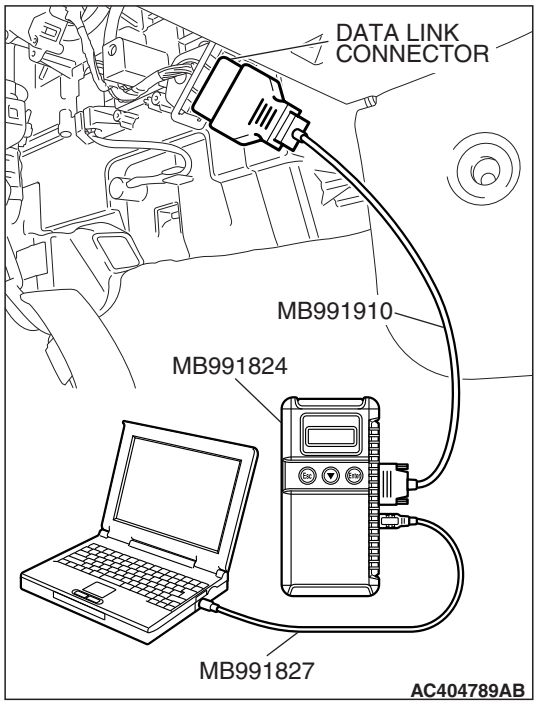

STEP 5. Using scan tool MB991958, check data list item 34:Transmission Range Switch.

⚠ CAUTION

To prevent damage to scan tool MB991958, always turn the ignition switch to the "LOCK" (OFF) position before connecting or disconnecting scan tool MB991958.

(1) Connect scan tool MB991958 to the data link connector.
(2) Turn the ignition switch to "ON" position.
(3) Set scan tool MB991958 to the data reading mode.
- Item 34: Transmission Range Switch.
  - Move the selector lever to "P," "R," "N," "D" and sport mode positions and confirm that the selected transmission range match the positions shown on scan tool MB991958. (The scan tool displays "D" range when the selector lever is shifted to the sport mode).

(4) Turn the ignition switch to the "LOCK" (OFF) position.

Q: Is the switch operating properly?

YES : It can be assumed that this malfunction is intermittent. Refer to GROUP 00, How to Use Troubleshooting/Inspection Service Points – How to Cope with Intermittent Malfunction P.00-14.

NO : Replace the PCM. When the PCM is replaced, register the encrypted code. Refer to GROUP 54A, Encrypted Code Registration Criteria Table P.54A-19.

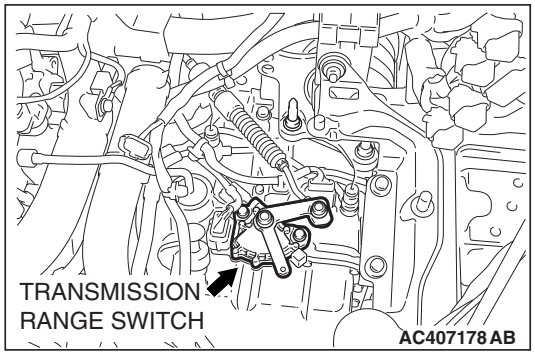

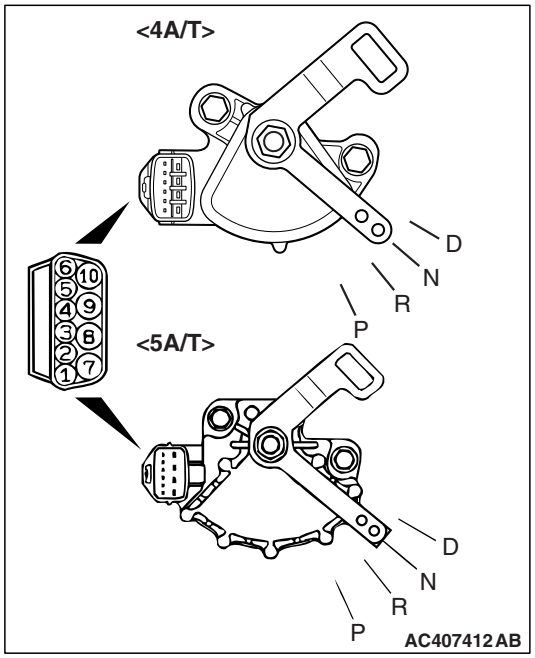

STEP 6. Check the transmission range switch.

Measure the resistance between the terminals for each transmission range as indicated in the table below.

TRANSMISSION RANGE	TERMINAL CONNECTION OF TESTER	SPECIFIED CONDITION
P	3 – 8, 9 – 10	Less than 2 ohms.
R	7 – 8	
N	4 – 8, 9 – 10	
D	1 – 8	

NOTE: For vehicles with sport mode, four positions (P, R, N, D) are used.

Q: Does the resistance measure less than 2 ohms for each transmission range?

YES : Go to Step 7.

NO : Replace the transmission range switch. Refer to GROUP 23B, P.23B-8 Transaxle <4A/T> or Refer to GROUP 23C, P.23C-8 Transaxle <5A/T>.

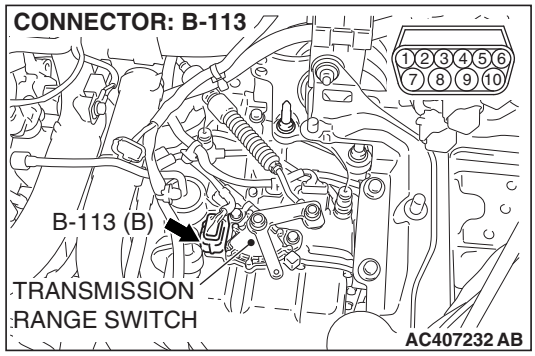

STEP 7. Check transmission range switch connector B-113 for loose, corroded or damaged terminals, or terminals pushed back in the connector.

Q: Are the connector and terminals in good condition?

YES : Go to Step 8.

NO : Repair or replace the damaged components. Refer to GROUP 00E, Harness Connector Inspection P.00E-2.

STEP 8. Measure the transmission range switch output voltage at PCM connector B-20 by using check harness special tool MB991923.

(1) Disconnect all the connectors from the PCM.

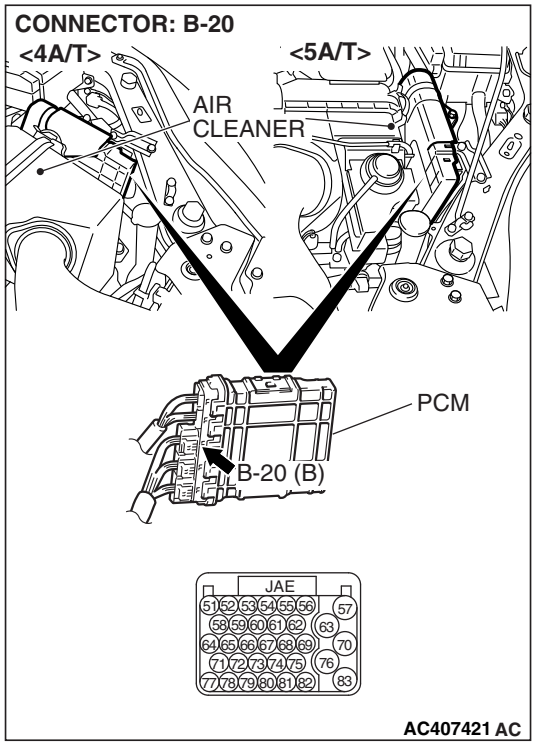

(2) Connect special tool MB991923 (check harness) between the PCM and the body-side harness connector.
(3) Turn the ignition switch to the "ON" position.
(4) Move the selector lever to the "P" position.

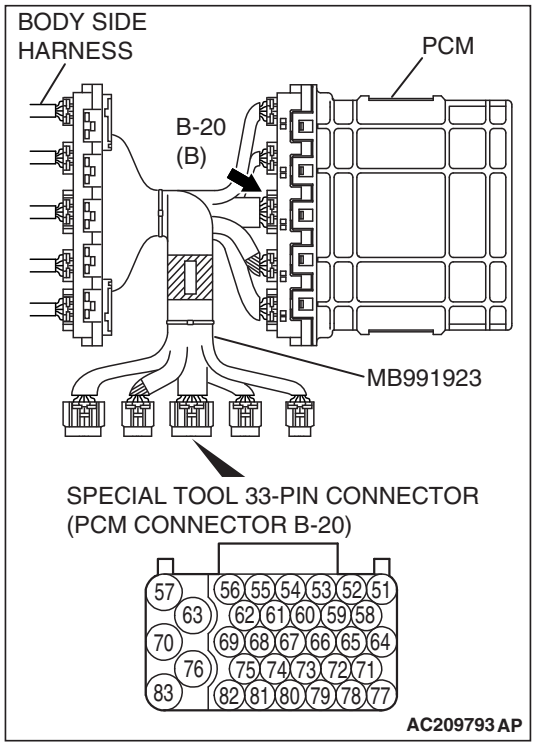

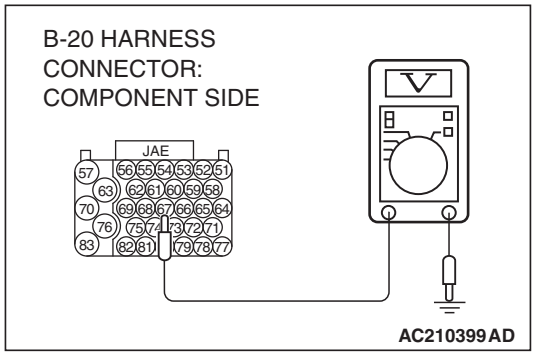

(5) Measure the voltage between terminal 67 and ground.
- The voltage should measure battery positive voltage.

(6) Turn the ignition switch to the "LOCK" (OFF) position.

Q: Is the measured voltage battery positive voltage?

YES : Go to Step 11.
NO : Go to Step 9.

STEP 9. Check PCM connector B-20 for loose, corroded or damaged terminals, or terminals pushed back in the connector.

Q: Are the connector and terminals in good condition?

YES : Go to Step 10.
NO : Repair or replace the damaged components. Refer to GROUP 00E, Harness Connector Inspection P.00E-2.

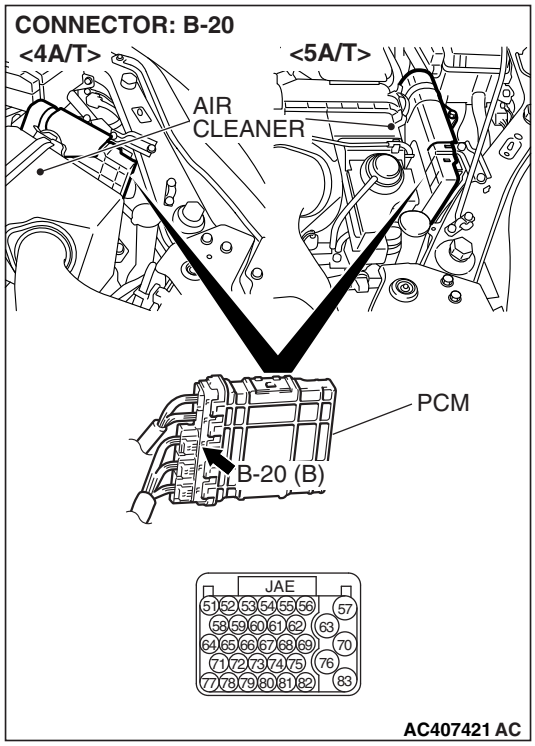

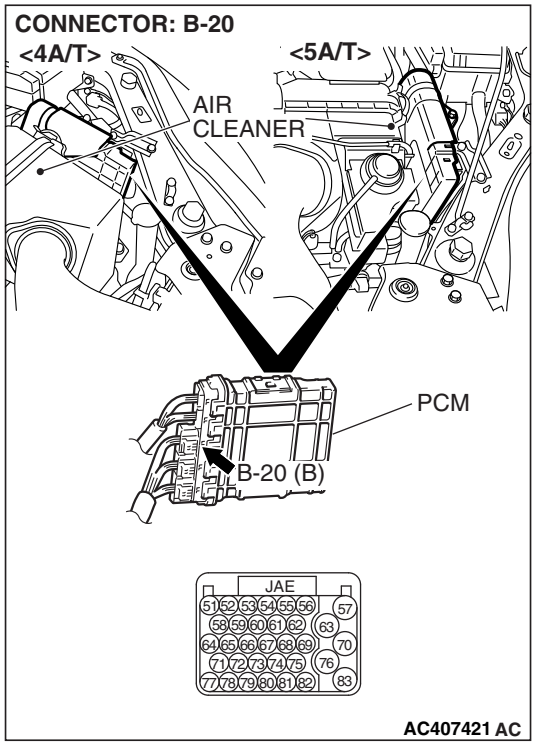

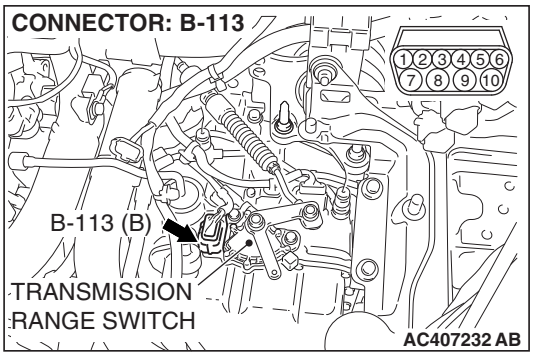

STEP 10. Check harness for open circuit or short circuit to ground between PCM connector B-20 terminal 67 and transmission range switch connector B-113 terminal 3.

Q: Is the harness wire in good condition?

YES : Go to Step 5.

NO : Repair or replace the harness wire.

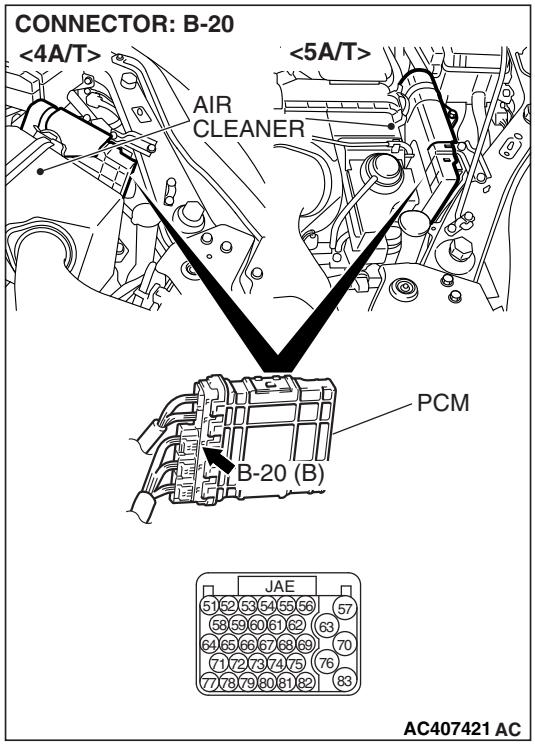

STEP 11. Check PCM connector B-20 for loose, corroded or damaged terminals, or terminals pushed back in the connector.

Q: Are the connector and terminals in good condition?

YES : Go to Step 5.

NO : Repair or replace the damaged components. Refer to GROUP 00E, Harness Connector Inspection P.00E-2.

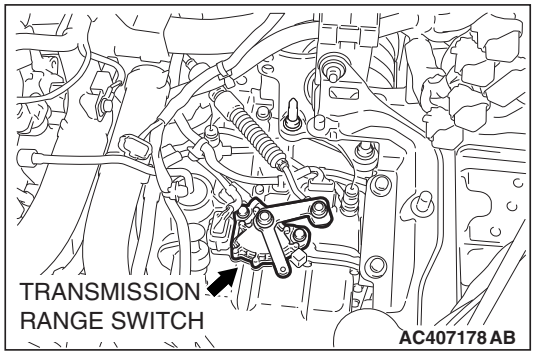

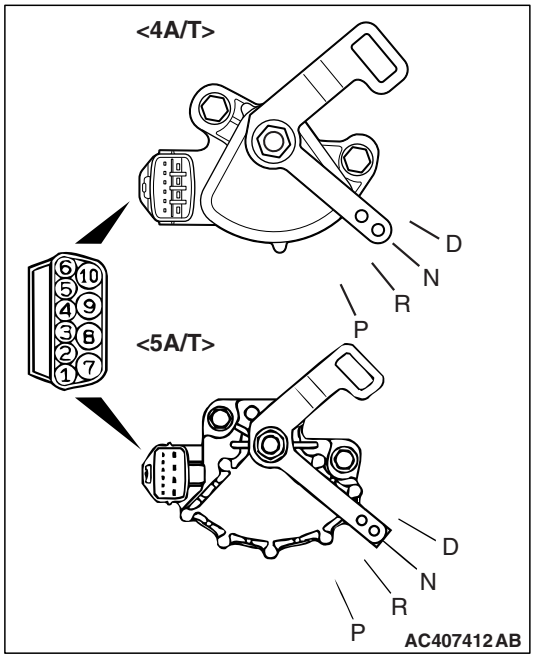

STEP 12. Check the transmission range switch.

Measure the resistance between the terminals for each transmission range as indicated in the table below.

TRANSMISSION RANGE	TERMINAL CONNECTION OF TESTER	SPECIFIED CONDITION
P	3 – 8, 9 – 10	Less than 2 ohms.
R	7 – 8	
N	4 – 8, 9 – 10	
D	1 – 8	

NOTE: For vehicles with sport mode, four positions (P, R, N, D) are used.

Q: Is the measured resistance less than 2 ohms for each transmission range?

YES : Go to Step 13.

NO : Replace the transmission range switch. Refer to GROUP 23B, P.23B-8 Transaxle <4A/T> or Refer to GROUP 23C, P.23C-8 Transaxle <5A/T>.

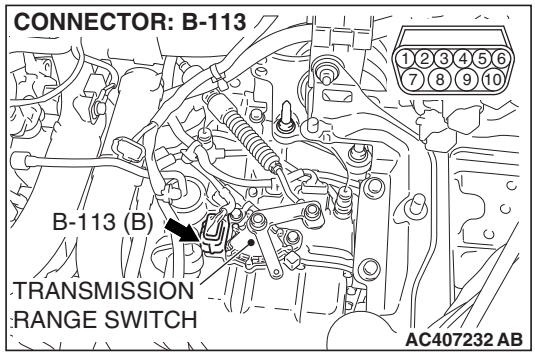

STEP 13. Check transmission range switch connector B-113 for loose, corroded or damaged terminals, or terminals pushed back in the connector.

Q: Are the connector and terminals in good condition?

YES : Go to Step 14.

NO : Repair or replace the damaged components. Refer to GROUP 00E, Harness Connector Inspection P.00E-2.

STEP 14. Measure the transmission range switch output voltage at PCM connector B-20 by using check harness special tool MB991923.

(1) Disconnect all the connectors from the PCM.

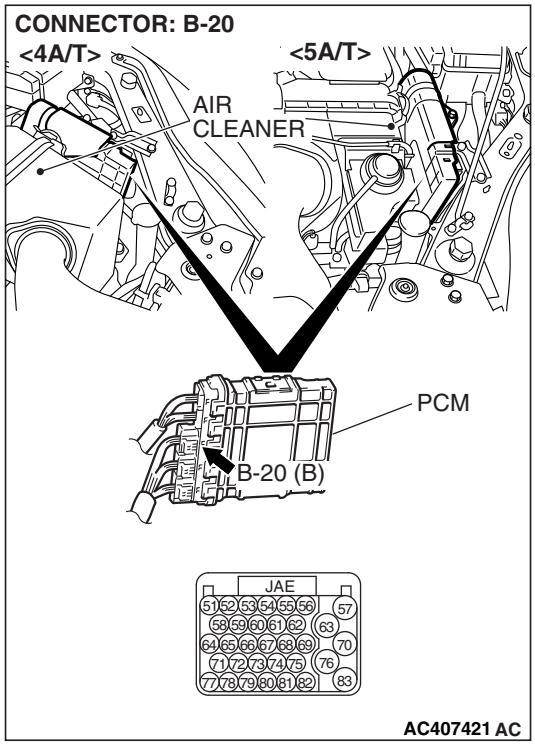

(2) Connect special tool MB991923 (check harness) between the PCM and the body-side harness connector.
(3) Turn the ignition switch to the "ON" position.
(4) Move the selector lever to the "R" position.

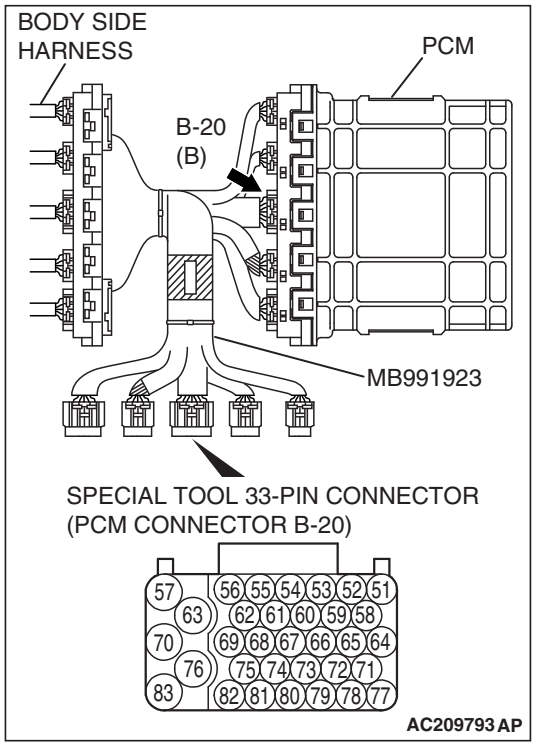

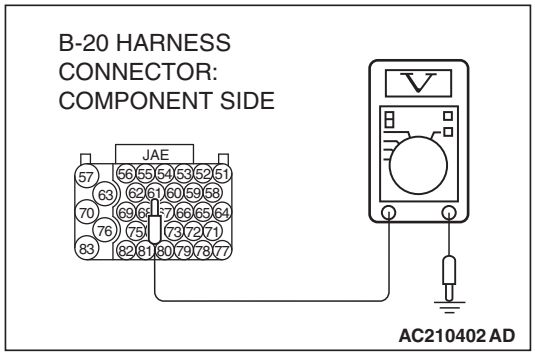

(5) Measure the voltage between terminal 61 and ground.
- The voltage should measure below battery positive voltage.

(6) Turn the ignition switch to the "LOCK" (OFF) position.

Q: Is the measured voltage battery positive voltage?

YES : Go to Step 11.
NO : Go to Step 15.

STEP 15. Check PCM connector B-20 for loose, corroded or damaged terminals, or terminals pushed back in the connector.

Q: Are the connector and terminals in good condition?

YES : Go to Step 16.
NO : Repair or replace the damaged components. Refer to GROUP 00E, Harness Connector Inspection P.00E-2.

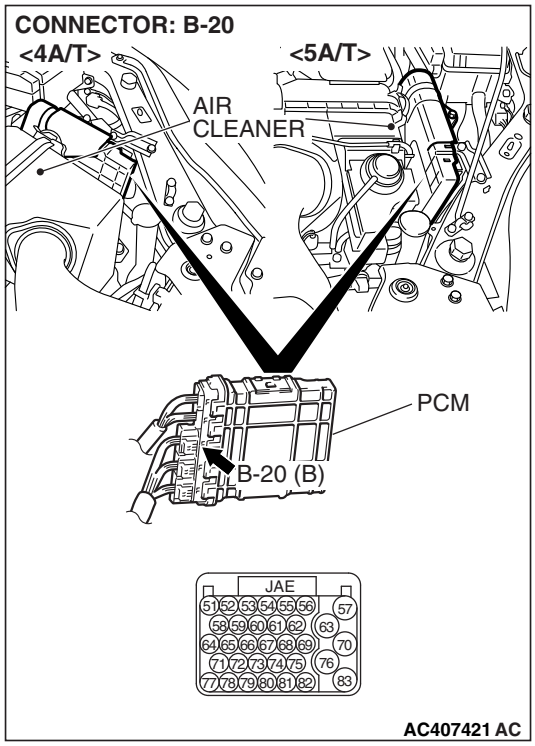

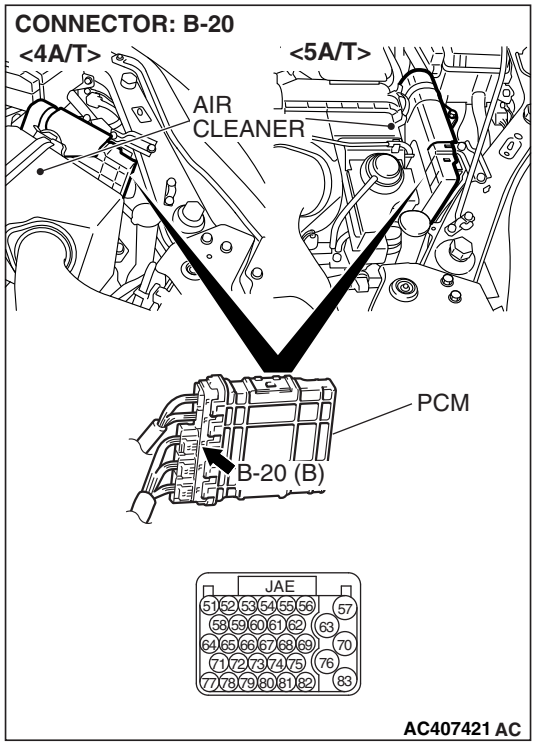

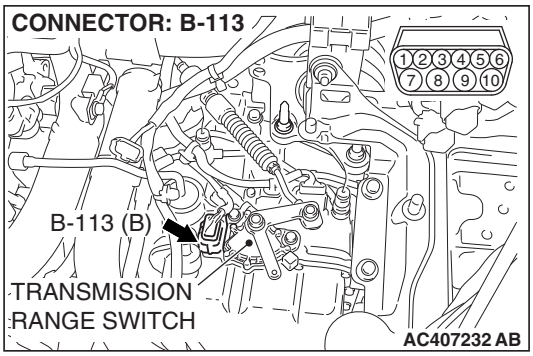

STEP 16. Check harness for open circuit or short circuit to ground between PCM connector B-20 terminal 61 and transmission range switch connector B-113 terminal 7.

Q: Is the harness wire in good condition?

YES : Go to Step 5.

NO : Repair or replace the harness wire.

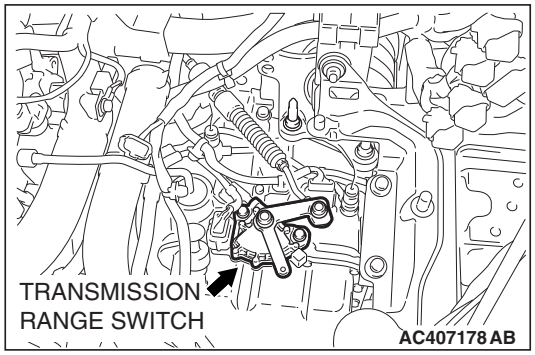

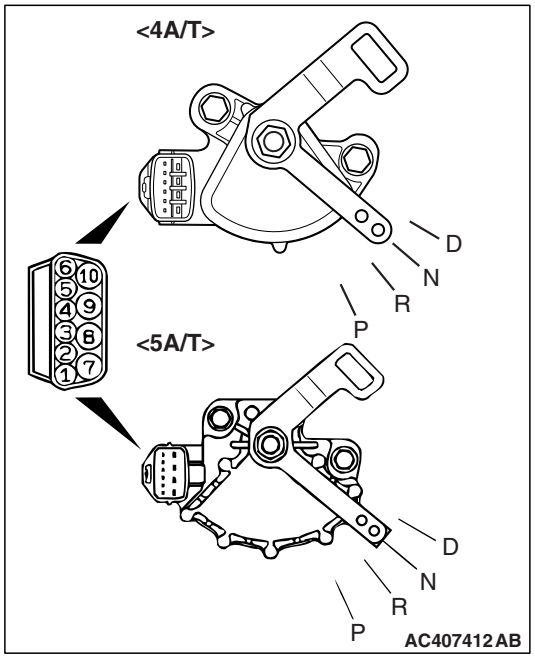

STEP 17. Check the transmission range switch.

Measure the resistance between the terminals for each transmission range as indicated in the table below.

TRANSMISSION RANGE	TERMINAL CONNECTION OF TESTER	SPECIFIED CONDITION
P	3 – 8, 9 – 10	Less than 2 ohms.
R	7 – 8	
N	4 – 8, 9 – 10	
D	1 – 8	

NOTE: For vehicles with sport mode, four positions (P, R, N, D) are used.

Q: Is the measured resistance less than 2 ohms for each transmission range?

YES : Go to Step 18.

NO : Replace the transmission range switch. Refer to GROUP 23B, P.23B-8 Transaxle <4A/T> or Refer to GROUP 23C, P.23C-8 Transaxle <5A/T>.

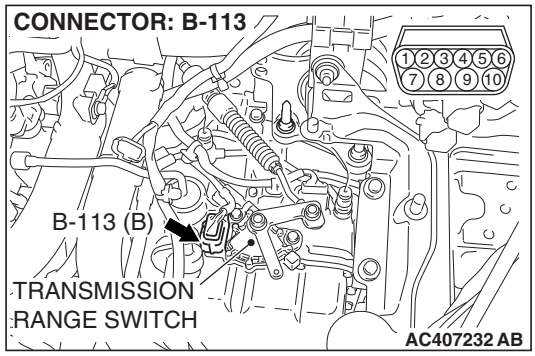

STEP 18. Check transmission range switch connector B-113 for loose, corroded or damaged terminals, or terminals pushed back in the connector.

Q: Are the connector and terminals in good condition?

YES : Go to Step 19.

NO : Repair or replace the damaged components. Refer to GROUP 00E, Harness Connector Inspection P.00E-2.

STEP 19. Measure the transmission range switch output voltage at PCM connector B-20 by using check harness special tool MB991923.

(1) Disconnect all the connectors from the PCM.

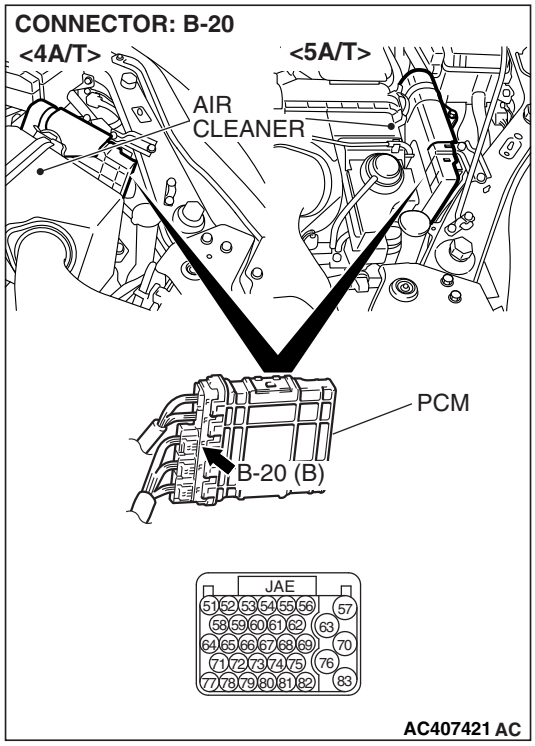

(2) Connect special tool MB991923 (check harness) between the PCM and the body-side harness connector.
(3) Turn the ignition switch to the "ON" position.
(4) Move the selector lever to the "N" position.

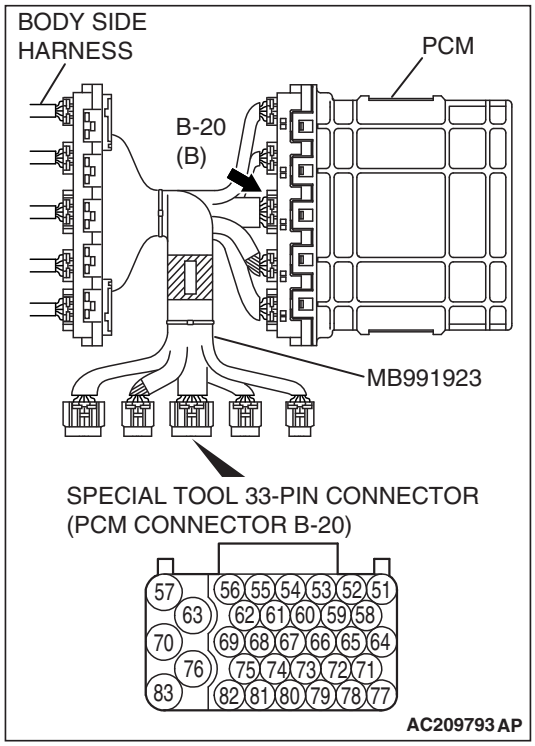

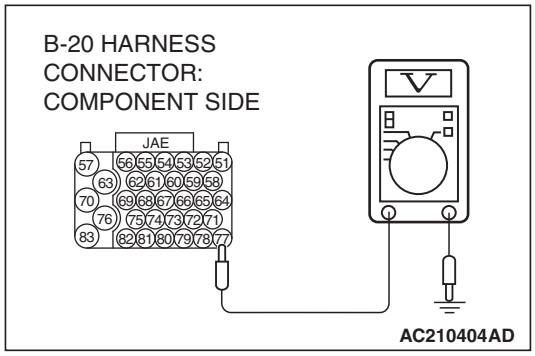

(5) Measure the voltage between terminal 77 and ground.
- The voltage should measure battery positive voltage.

(6) Turn the ignition switch to the "LOCK" (OFF) position.

Q: Is the measured voltage battery positive voltage?

YES : Go to Step 11.
NO : Go to Step 20.

STEP 20. Check PCM connector B-20 for loose, corroded or damaged terminals, or terminals pushed back in the connector.

Q: Are the connector and terminals in good condition?

YES : Go to Step 21.
NO : Repair or replace the damaged components. Refer to GROUP 00E, Harness Connector Inspection P.00E-2.

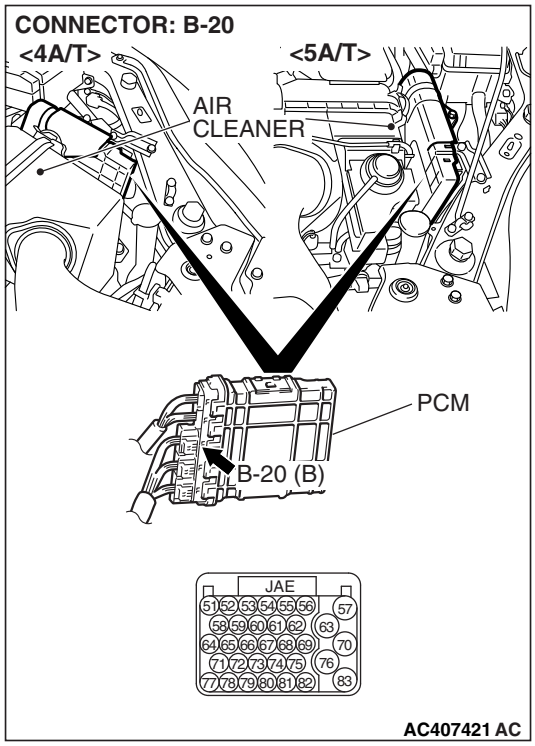

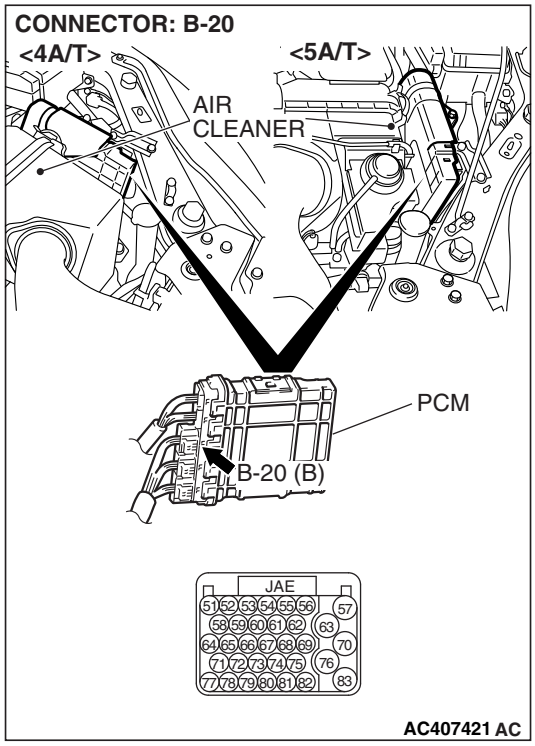

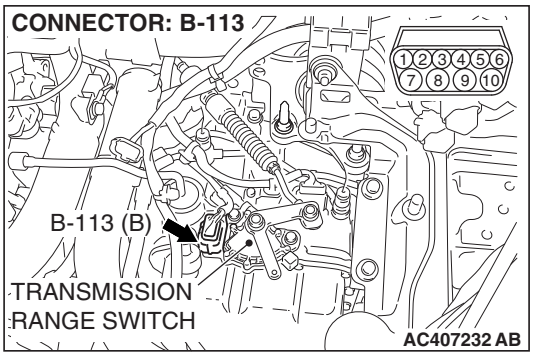

STEP 21. Check harness for open circuit or short circuit to ground between PCM connector B-20 terminal 77 and transmission range switch connector B-113 terminal 4.

Q: Is the harness wire in good condition?

YES : Go to Step 5.

NO : Repair or replace the harness wire.

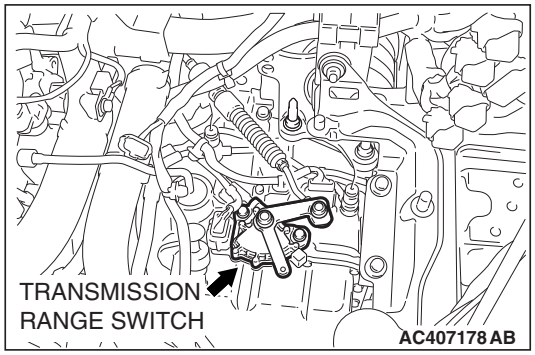

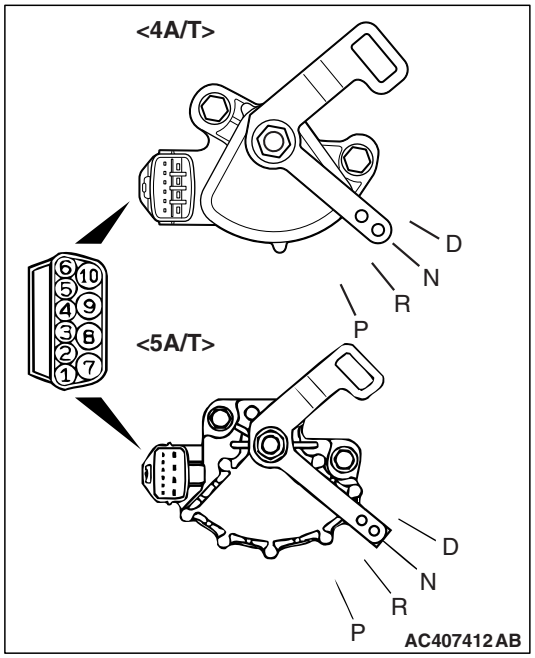

STEP 22. Check the transmission range switch.

Measure the resistance between the terminals for each transmission range as indicated in the table below.

TRANSMISSION RANGE	TERMINAL CONNECTION OF TESTER	SPECIFIED CONDITION
P	3 – 8, 9 – 10	Less than 2 ohms.
R	7 – 8	
N	4 – 8, 9 – 10	
D	1 – 8	

NOTE: For vehicles with sport mode, four positions (P, R, N, D) are used.

Q: Is the measured resistance less than 2 ohms for each transmission range?

YES : Go to Step 23.

NO : Replace the transmission range switch. Refer to GROUP 23B, P.23B-8 Transaxle <4A/T> or Refer to GROUP 23C, P.23C-8 Transaxle <5A/T>.

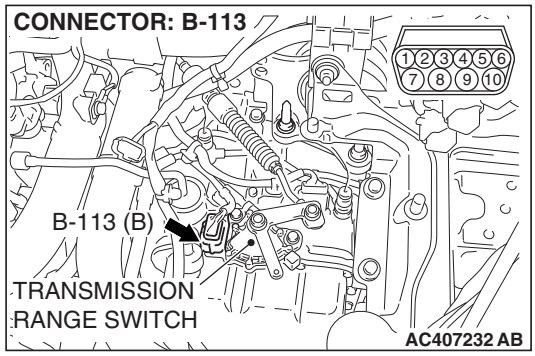

STEP 23. Check transmission range switch connector B-113 for loose, corroded or damaged terminals, or terminals pushed back in the connector.

Q: Are the connector and terminals in good condition?

YES : Go to Step 24.

NO : Repair or replace the damaged components. Refer to GROUP 00E, Harness Connector Inspection P.00E-2.

STEP 24. Measure the transmission range switch output voltage at PCM connector B-20 by using check harness special tool MB991923.

(1) Disconnect all the connectors from the PCM.

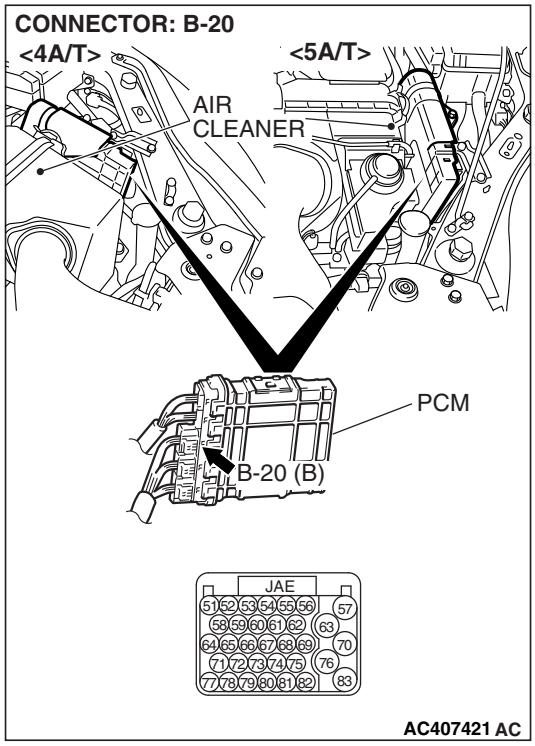

(2) Connect special tool MB991923 (check harness) between the PCM and the body-side harness connector.
(3) Turn the ignition switch to the "ON" position.
(4) Move the selector lever to the "D" position.

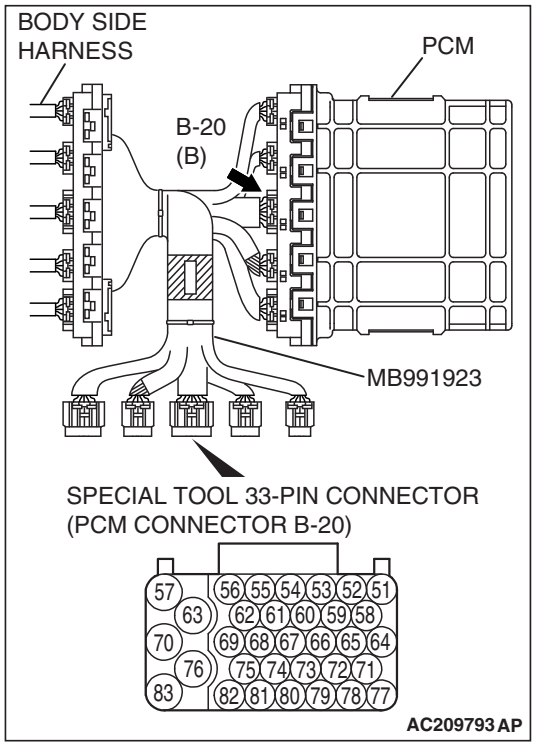

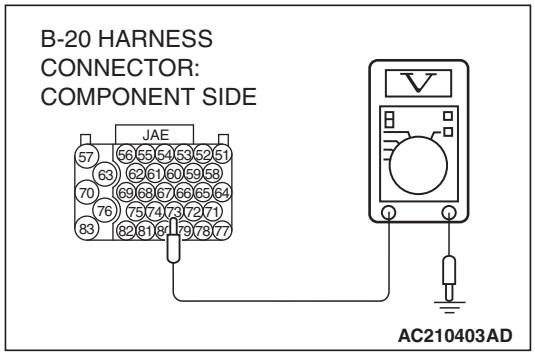

(5) Measure the voltage between terminal 73 and ground.
- The voltage should equal battery voltage (approximately12 volts).

(6) Turn the ignition switch to the "LOCK" (OFF) position.

Q: Does the voltage measure battery positive voltage?

YES : Go to Step 11.
NO : Go to Step 25.

STEP 25. Check PCM connector B-20 for loose, corroded or damaged terminals, or terminals pushed back in the connector.

Q: Are the connector and terminals in good condition?

YES : Go to Step 26.
NO : Repair or replace the damaged components. Refer to GROUP 00E, Harness Connector Inspection P.00E-2.

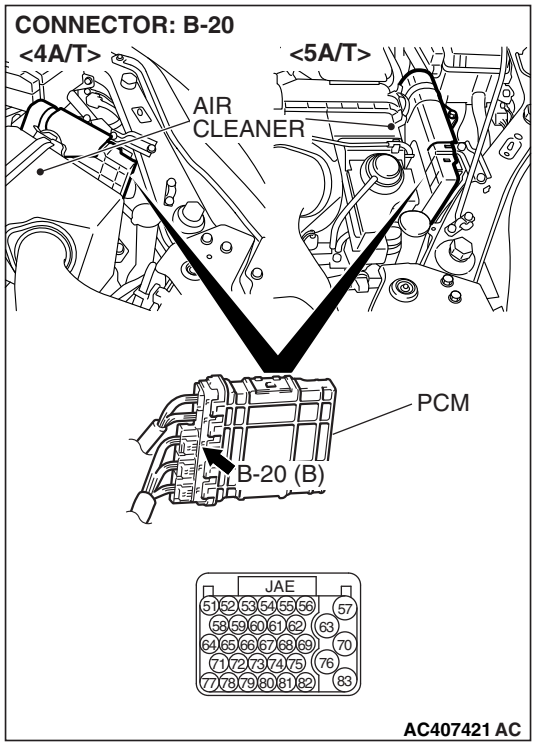

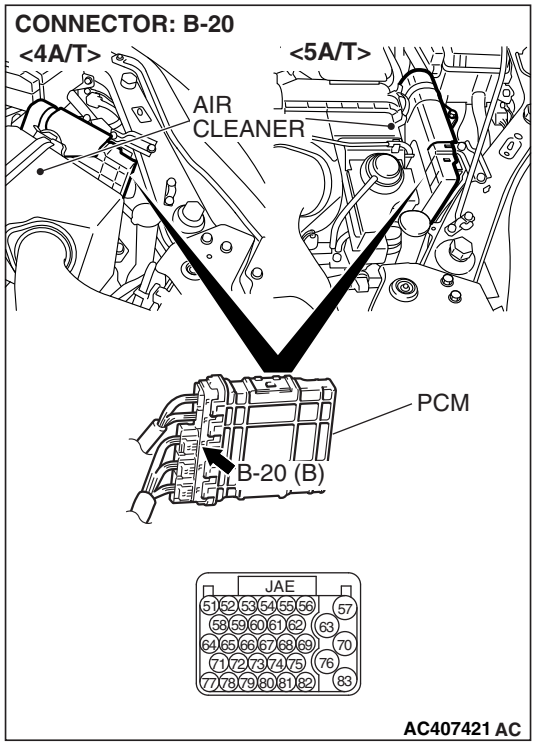

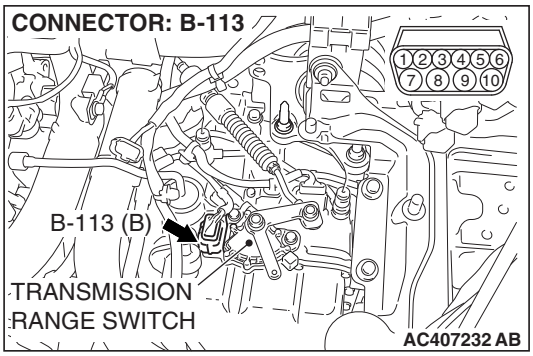

STEP 26. Check harness for open circuit or short circuit to ground between PCM connector B-20 terminal 73 and transmission range switch connector B-113 terminal 1.

Q: Is the harness wire in good condition?

YES : Go to Step 27.

NO : Repair or replace the harness wire.

STEP 27. Check intermediate connector A-15 and shift switch assembly connector C-17 for loose, corroded or damaged terminals, or terminals pushed back in the connector.

Q: Are the connector and terminals in good condition?

YES : Go to Step 28.

NO : Repair or replace the damaged components. Refer to GROUP 00E, Harness Connector Inspection P.00E-2.

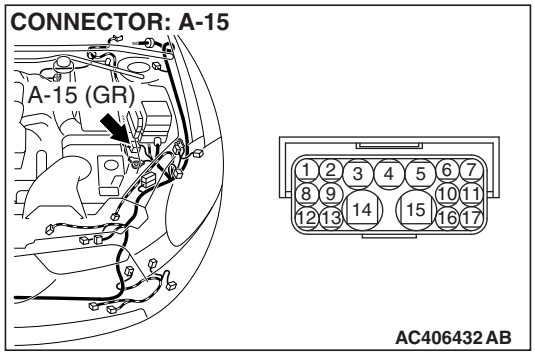

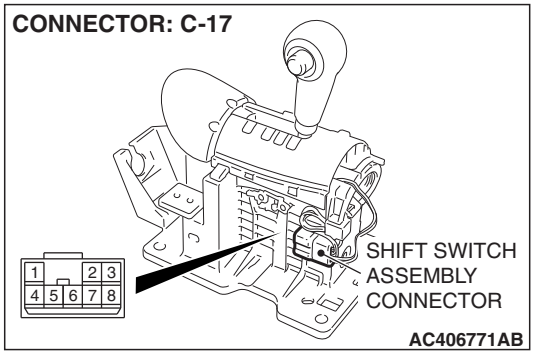

STEP 28. Check harness for short circuit to ground between transmission range switch connector B-113 terminal 1 and shift switch assembly connector C-17 terminal 1.

Q: Is the harness wire in good condition?

YES : Go to Step 5.

NO : Repair or replace the harness wire.

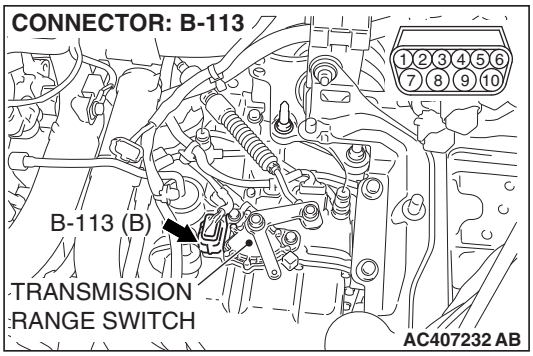

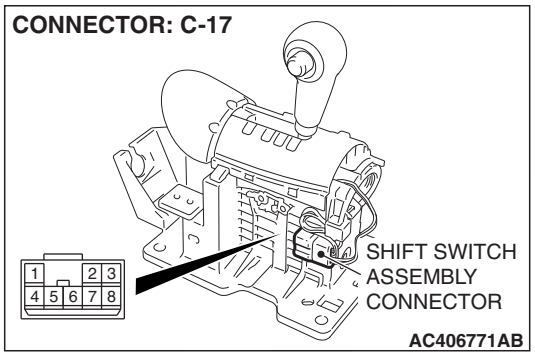

STEP 29. Check the shift switch assembly. Refer to P.23A-404, Transaxle Control.

Q: Is the switch operating properly?

YES : Go to Step 30 .

NO : Replace the shift switch assembly. Refer to P.23A-404, Transaxle Control.

STEP 30. Check PCM connector B-19 and shift switch assembly connector C-17 for loose, corroded or damaged terminals, or terminals pushed back in the connector.

Q: Are the connector and terminals in good condition?

YES : Go to Step 31.

NO : Repair or replace the damaged components. Refer to GROUP 00E, Harness Connector Inspection P.00E-2.

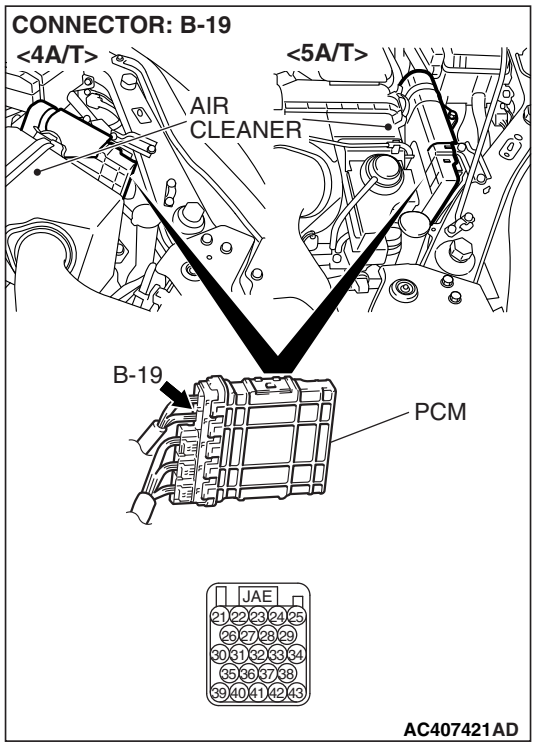

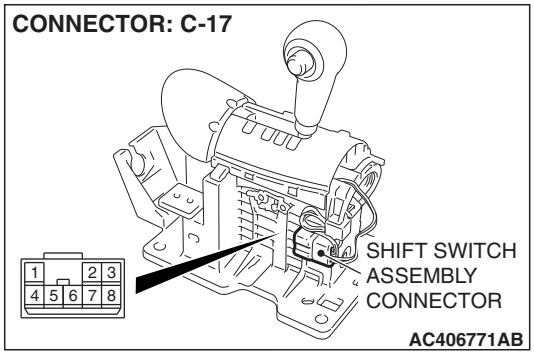

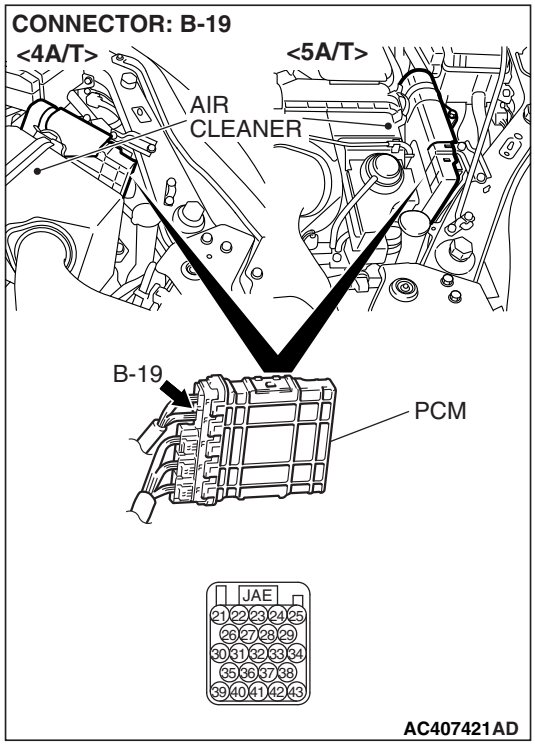

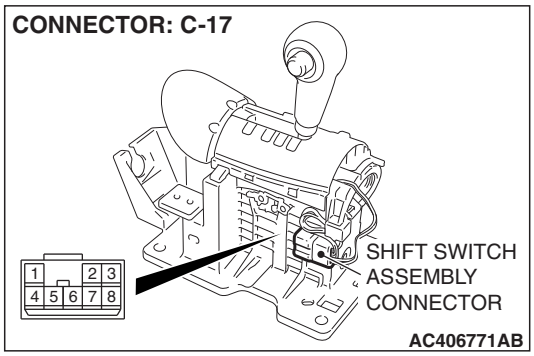

STEP 31 . Check harness for short circuit to ground between PCM connector B-19 terminal 39 and shift switch assembly connector C-17 terminal 6.

Q: Is the harness wire in good condition?

YES : Go to Step 5.

NO : Repair or replace the harness wire.

DTC P1771 (P0705): Transmission Range Switch System (Short Circuit)

⚠ CAUTION
If DTC P1771 (P0705) has been set, TCL related DTC C1397 is also set. After DTC P1771 (P0705) has been diagnosed, don't forget to erase DTC C1397.

TRANSMISSION RANGE SWITCH SYSTEM CIRCUIT

Refer to P.23A-143.

CIRCUIT OPERATION

Refer to P.23A-143.

DESCRIPTIONS OF MONITOR METHODS

- If two types or more of signals are input from transmission range switch for more than 30 seconds, PCM judges that transmission range switch has a failure.

MONITOR EXECUTION

- Continuous

MONITOR EXECUTION CONDITIONS (OTHER MONITOR AND SENSOR)

Other Monitor (There is no temporary DTC stored in memory for the item monitored below)

- Not applicable

Sensor (The sensor below is determined to be normal)

- Not applicable

LOGIC FLOW CHARTS (Monitor Sequence)

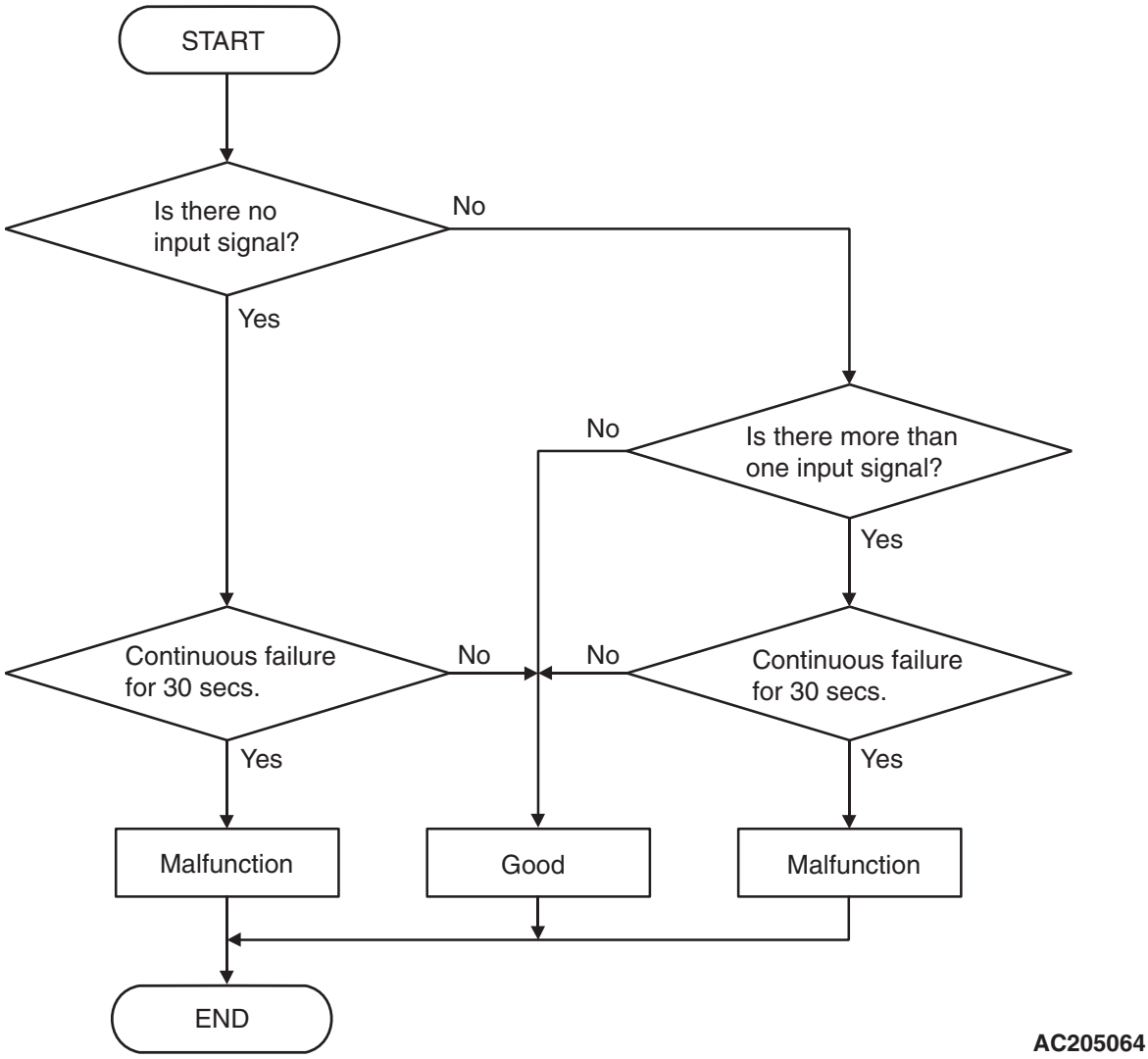

DTC SET CONDITIONS

Check Conditions, Judgement Criteria

- Transmission range switch: multiple signal. (30 seconds)

OBD-II DRIVE CYCLE PATTERN

Start the engine, keep the vehicle stopped in "P," "R," "N," and "D" ranges respectively for more than one minute, and turn "LOCK" (OFF) the ignition switch. Then restart the engine, and stop the vehicle in "P," "R," "N," and "D" ranges respectively for more than one minute.

TROUBLESHOOTING HINTS (THE MOST LIKELY CAUSES FOR THIS CODE TO BE SET ARE:)

- Malfunction of the transmission range switch circuit
- Damaged harness or connector
- Malfunction of the PCM

DIAGNOSIS

Required Special Tool:

- MB991958: Scan Tool (M.U.T.-III Sub Assembly)
  - MB991824: V.C.I.
  - MB991827: M.U.T.-III USB Cable
  - MB991910: M.U.T.-III Main harness A

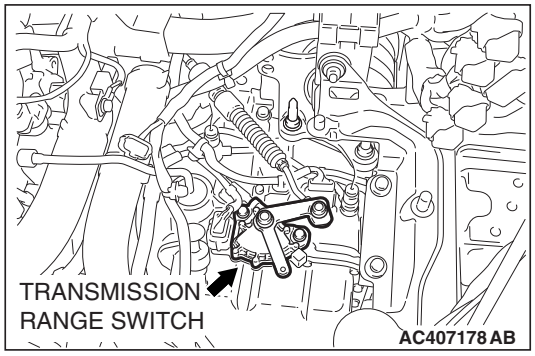

STEP 1. Check the transmission range switch.

Measure the resistance between the terminals for each transmission range as indicated in the table below.

TRANSMISSION RANGE	TERMINAL CONNECTION OF TESTER	SPECIFIED CONDITION
P	3 – 8, 9 – 10	Less than 2 ohms.
R	7 – 8	
N	4 – 8, 9 – 10	
D	1 – 8	

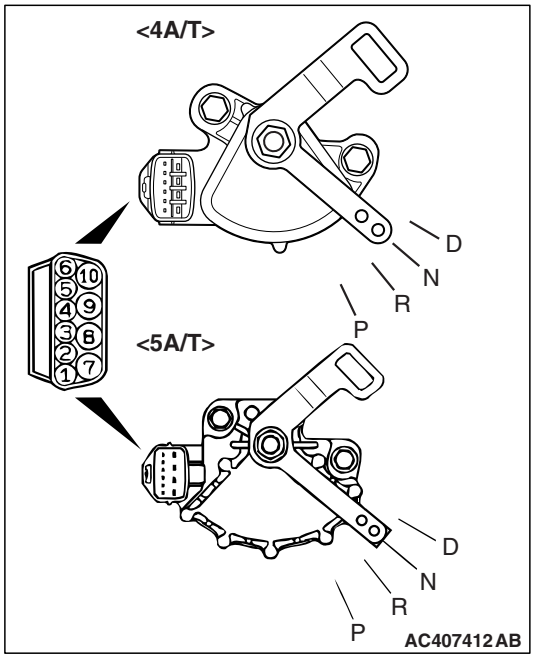

NOTE: For vehicles with sport mode, four positions (P, R, N, D) are used.

Q: Does the resistance measure less than 2 ohms for each selector position?

YES : Go to Step 2.

NO : Replace the transmission range switch. Refer to GROUP 23B, P.23B-8 Transaxle <4A/T> or Refer to GROUP 23C, P.23C-8 Transaxle <5A/T>.

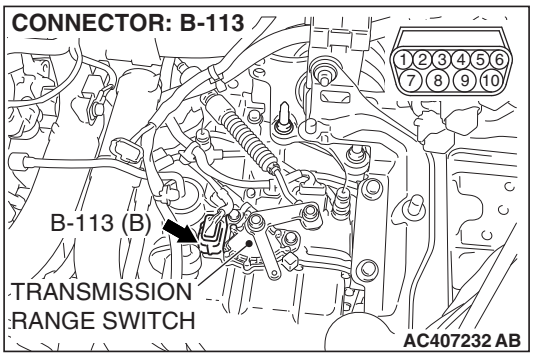

STEP 2. Check transmission range switch connector B-113 for loose, corroded or damaged terminals, or terminals pushed back in the connector.

Q: Are the connector and terminals in good condition?

YES : Go to Step 3.

NO : Repair or replace the damaged components. Refer to GROUP 00E, Harness Connector Inspection P.00E-2.

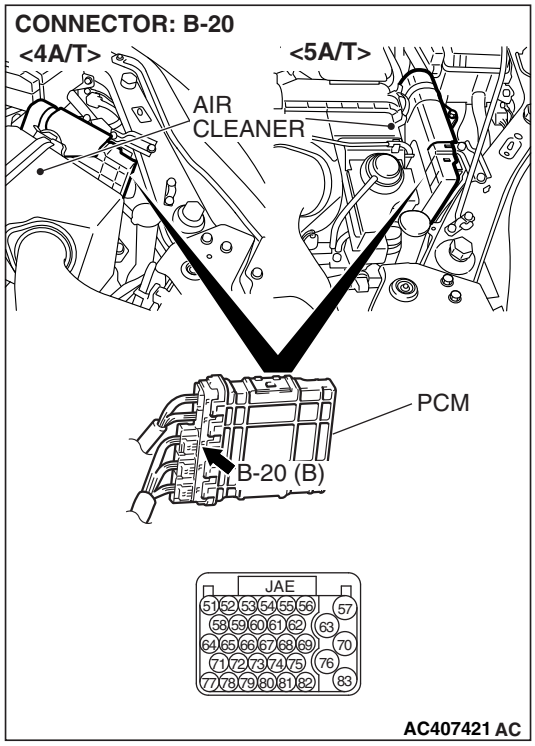

STEP 3. Check PCM connector B-20 for loose, corroded or damaged terminals, or terminals pushed back in the connector.

Q: Are the connector and terminals in good condition?

YES : Go to Step 4.

NO : Repair or replace the damaged components. Refer to GROUP 00E, Harness Connector Inspection P.00E-2.

STEP 4. Measure the transmission range switch output voltage at PCM connector B-20 by using check harness special tool MB991923. ("P" position)

(1) Disconnect all the connectors from the PCM.

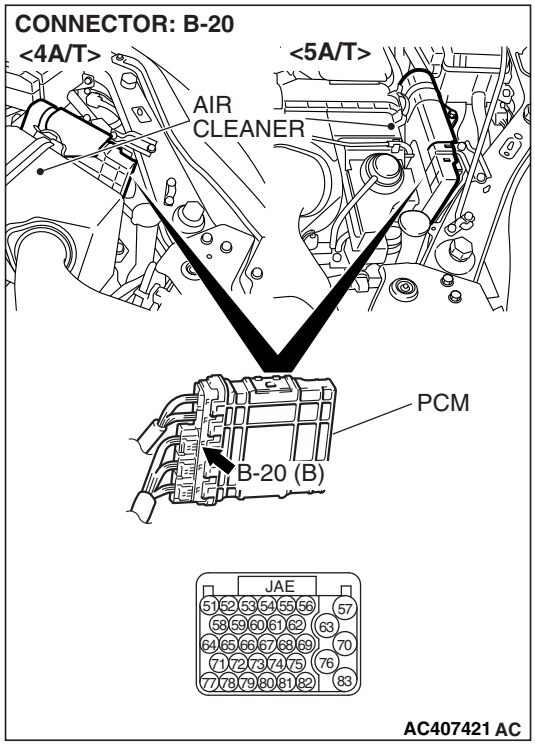

(2) Connect special tool MB991923 (check harness) between the PCM and the body-side harness connector.

(3) Turn the ignition switch to the "ON" position.

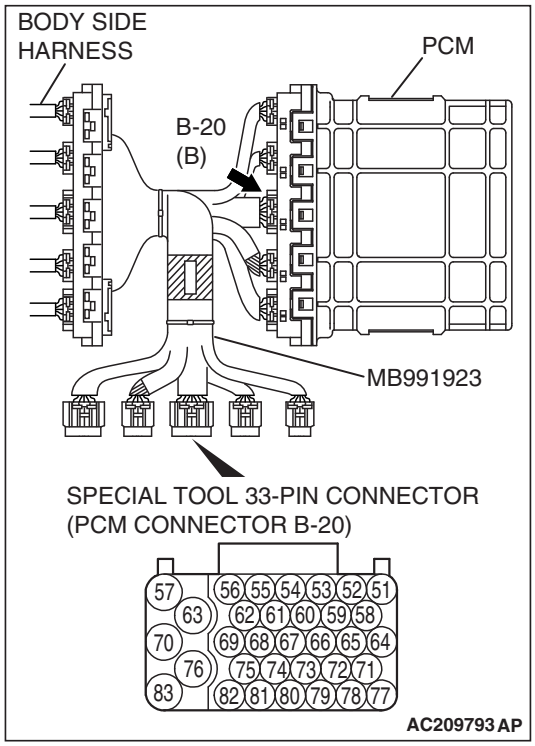

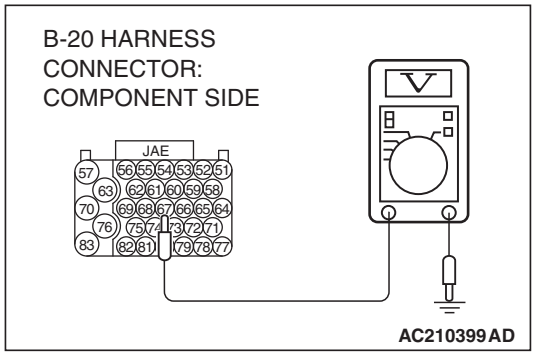

(4) Measure the voltage between terminal 67 and ground.
- When transmission range is "P," voltage should equal battery positive voltage.
- When transmission range is "R," voltage should measure 0.5 volt or less.
- When transmission range is "N," voltage should measure 0.5 volt or less.
- When transmission range is "D," voltage should measure 0.5 volt or less.
- When transmission range is sport mode, voltage should measure 0.5 volt or less.

Q: Is the measured voltage within the specified range?

YES : Go to Step 6.

NO : Turn the ignition switch to the "LOCK" (OFF) position. Go to Step 5.

STEP 5. Check harness for damage between PCM connector B-20 terminal 67 and transmission range switch connector B-113 terminal 3.

Q: Is the harness wire in good condition?

YES : Go to Step 14.

NO : Repair or replace the harness wire.

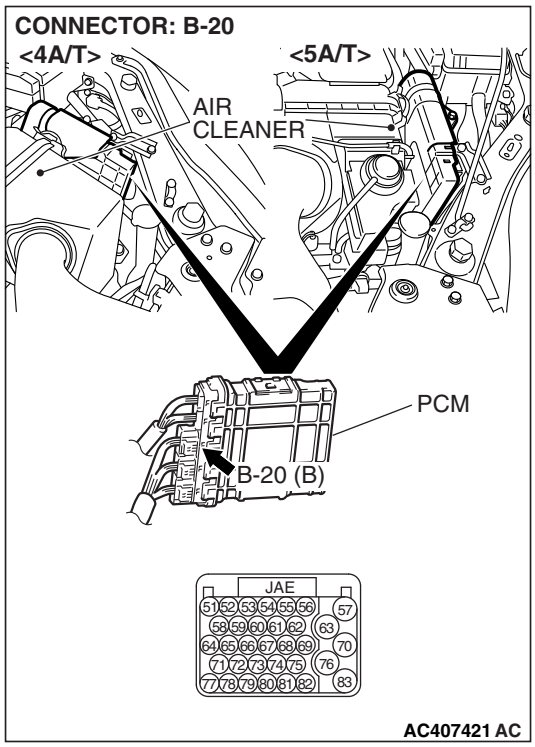

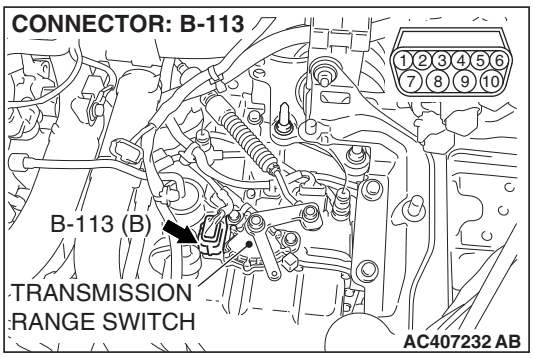

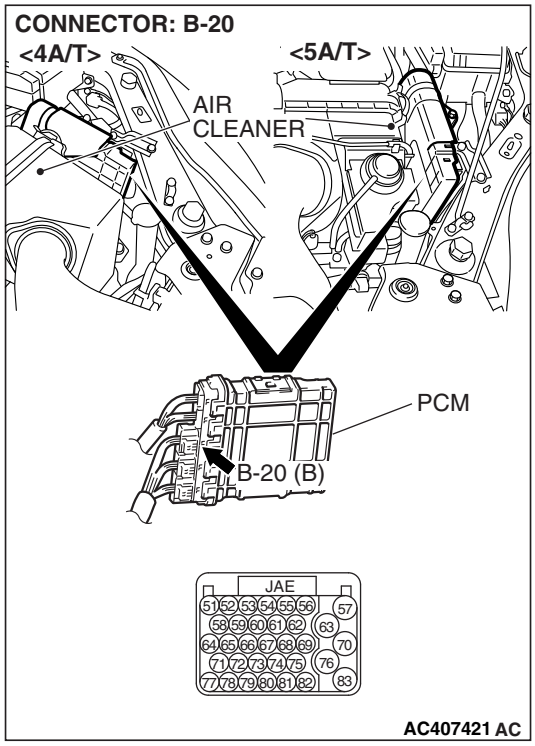

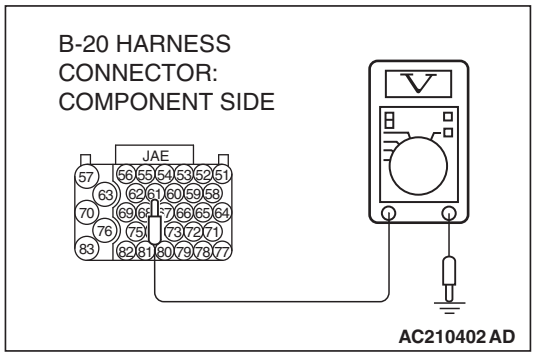

STEP 6. Measure the transmission range switch output voltage at PCM connector B-20 by using check harness special tool MB991923. ("R" position)

Measure the voltage between terminal 61 and ground.

- When transmission range is "P," voltage should measure 0.5 volt or less.
- When transmission range is "R," voltage should equal battery positive voltage.
- When transmission range is "N," voltage should measure 0.5 volt or less.
- When transmission range is "D," voltage should measure 0.5 volt or less.
- When transmission range is sport mode, voltage should measure 0.5 volt or less.

Q: Is the measured voltage within the specified range?

YES : Go to Step 8.

NO : Turn the ignition switch to the "LOCK" (OFF) position. Go to Step 7.

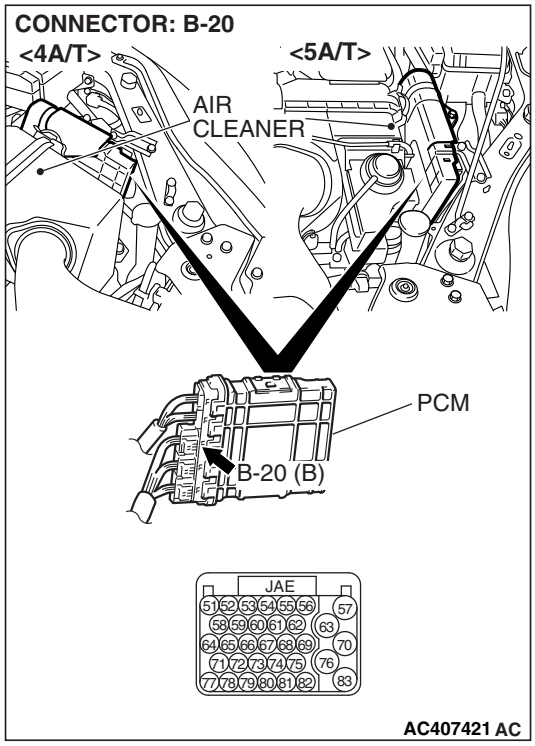

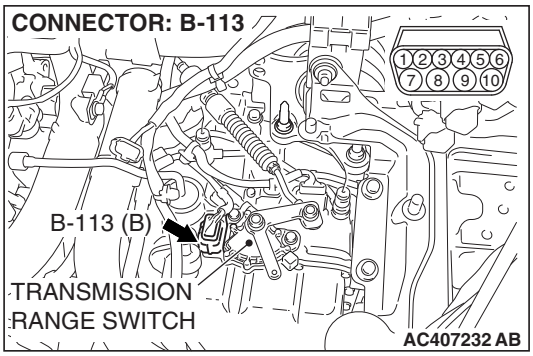

STEP 7. Check the harness for damage between PCM connector B-20 terminal 61 and transmission range switch connector B-113 terminal 7.

Q: Is the harness wire in good condition?

YES : Go to Step 14.

NO : Repair or replace the harness wire.

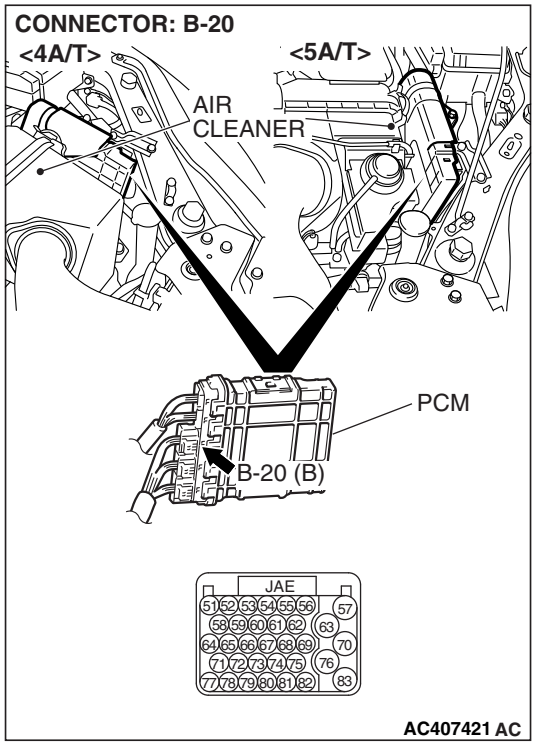

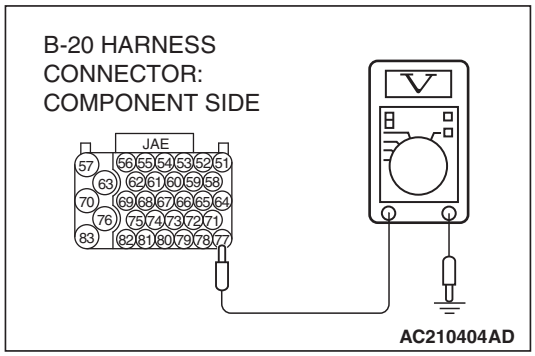

STEP 8. Measure the transmission range switch output voltage at PCM connector B-20 by using check harness special tool MB991923. ("N" position)

Measure the voltage between terminal 77 and ground.

- When transmission range is "P," voltage should measure 0.5 volt or less.
- When transmission range is "R," voltage should measure 0.5 volt or less.
- When transmission range is "N," voltage should equal battery positive voltage.
- When transmission range is "D," voltage should measure 0.5 volt or less.
- When transmission range is sport mode, voltage should measure 0.5 volt or less.

Q: Is the measured voltage within the specified range?

YES : Go to Step 10.

NO : Turn the ignition switch to the "LOCK" (OFF) position. Go to Step 9.

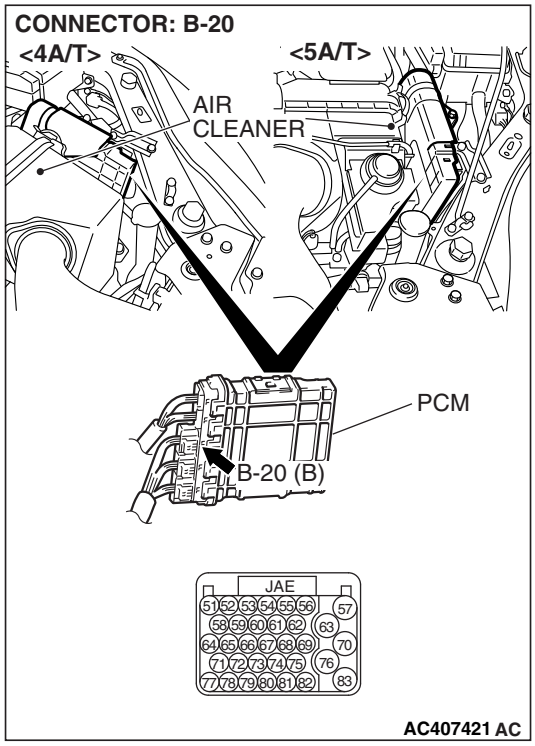

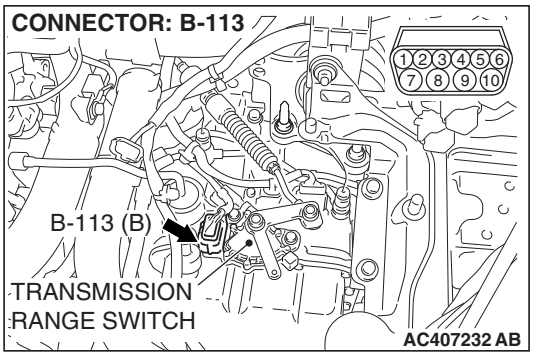

STEP 9. Check the harness for damage between PCM connector B-20 terminal 77 and transmission range switch connector B-113 terminal 4.

Q: Is the harness wire in good condition?

YES : Go to Step 14.

NO : Repair or replace the harness wire.

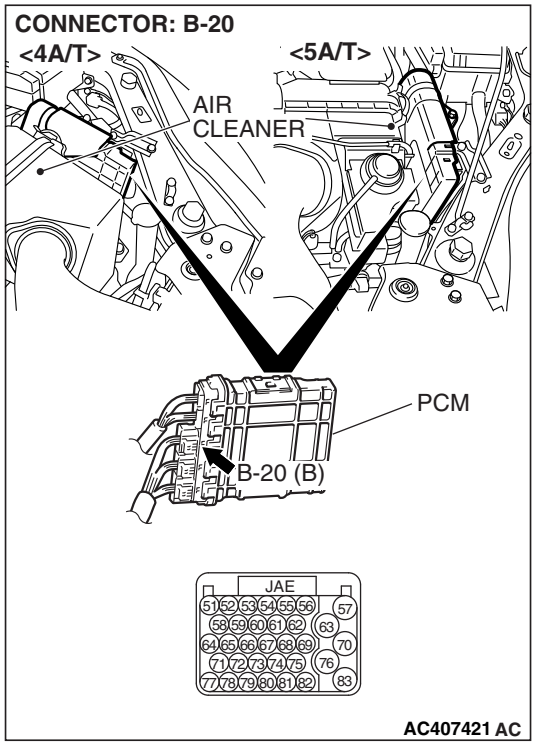

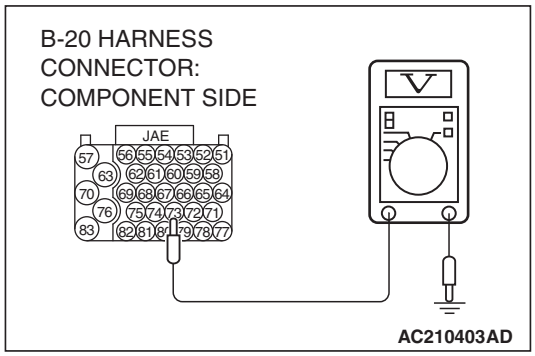

STEP 10. Measure the transmission range switch output voltage at PCM connector B-20 by using check harness special tool MB991923. ("D" position)

Measure the voltage between terminal 73 and ground.

- When transmission range is "P," voltage should measure 0.5 volt or less.
- When transmission range is "R," voltage should measure 0.5 volt or less.
- When transmission range is "N," voltage should measure 0.5 volt or less.
- When transmission range is "D," voltage should equal battery positive voltage.
- When transmission range is sport mode, voltage should equal battery positive voltage.

Q: Is the measured voltage within the specified range?

YES : Go to Step 14.

NO : Turn the ignition switch to the "LOCK" (OFF) position. Go to Step 11.

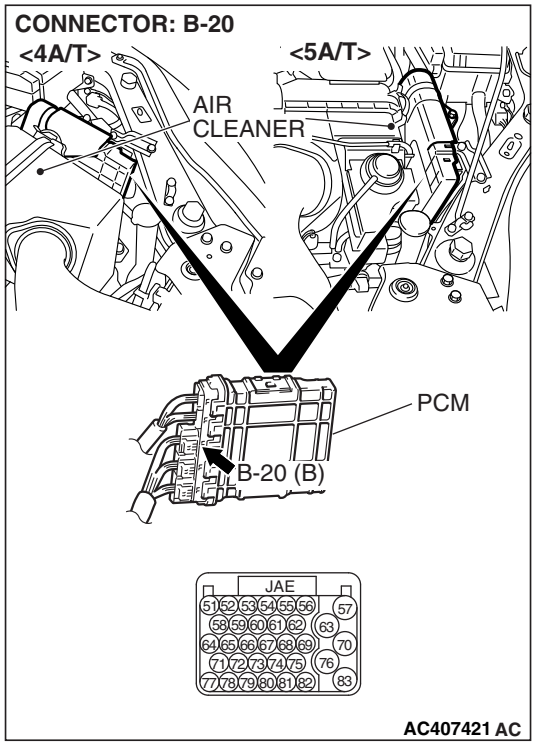

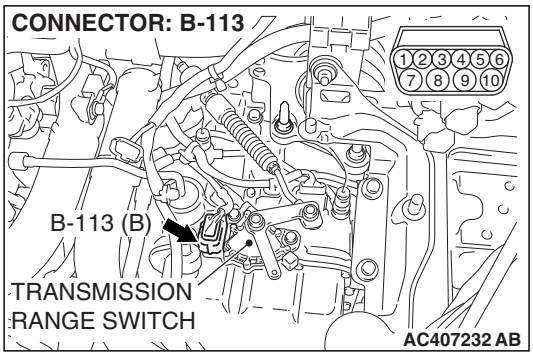

STEP 11. Check the harness for damage between PCM connector B-20 terminal 73 and transmission range switch connector B-113 terminal 1.

Q: Is the harness wire in good condition?

YES : Go to Step 12.

NO : Repair or replace the harness wire.

STEP 12. Check intermediate connector A-15, PCM connector B-19 and shift switch assembly connector C-17 for loose, corroded or damaged terminals, or terminals pushed back in the connector.

Q: Are the connectors and terminals in good condition?

YES : Go to Step 13.

NO : Repair or replace the damaged components. Refer to GROUP 00E, Harness Connector Inspection P.00E-2.

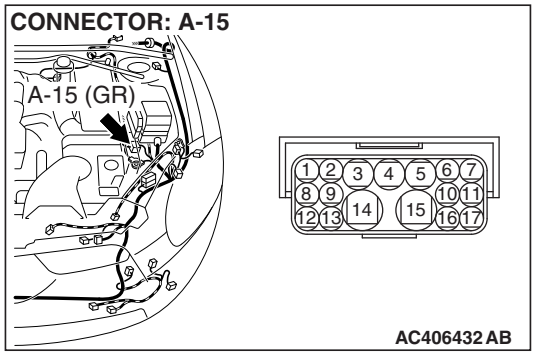

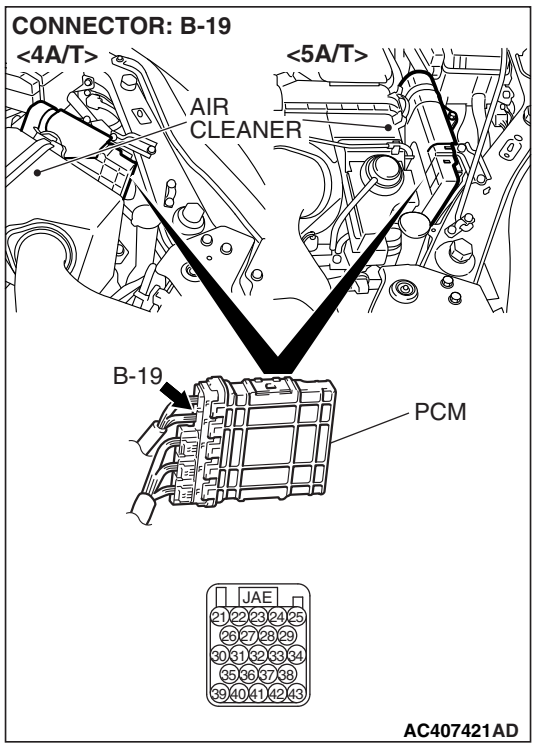

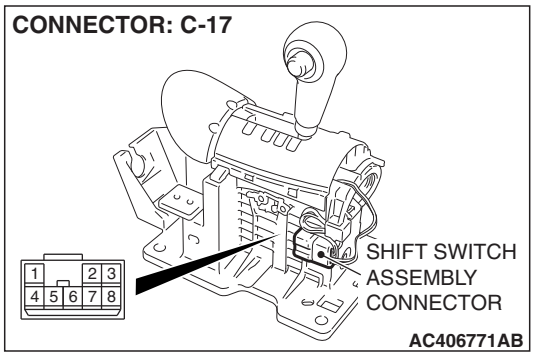

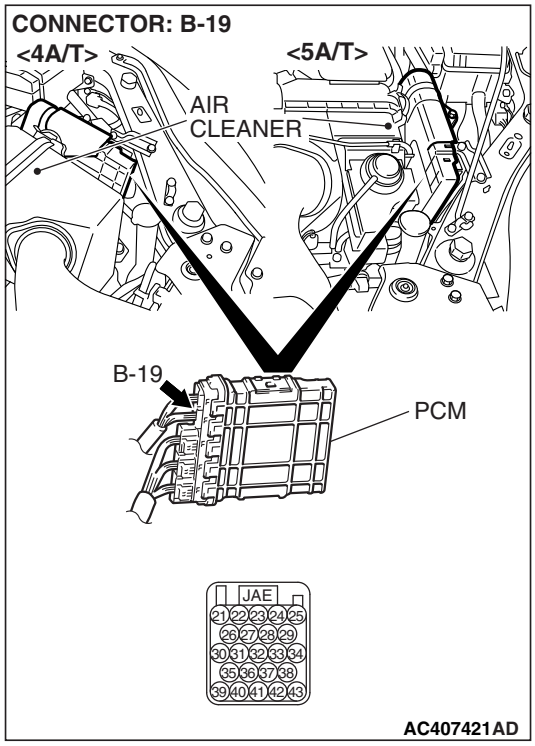

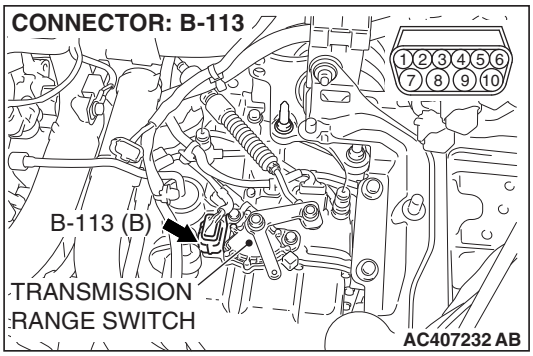

STEP 13. Check the harness for damage between PCM connector B-19 terminal 39 and transmission range switch connector B-113 terminal 1.

Q: Is the harness wire in good condition?

YES : Go to Step 14.

NO : Repair or replace the harness wire.

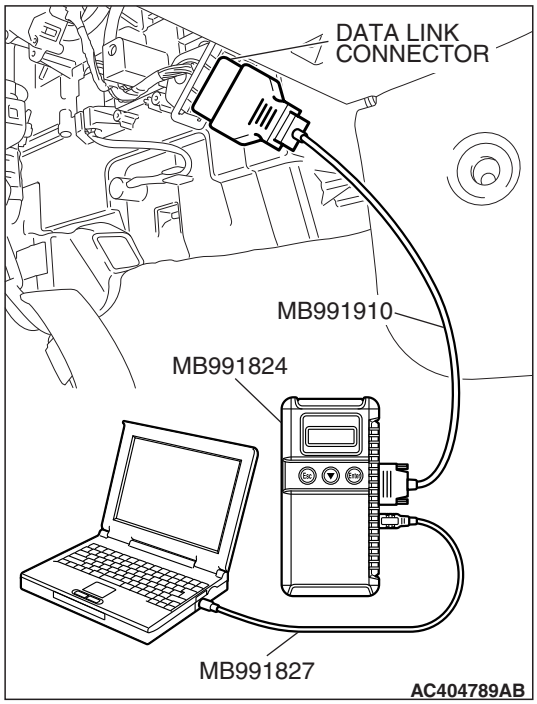

STEP 14. Using scan tool MB991958, check data list item 34: Transmission Range Switch.

⚠ CAUTION

To prevent damage to scan tool MB991958, always turn the ignition switch to the "LOCK" (OFF) position before connecting or disconnecting scan tool MB991958.

(1) Connect scan tool MB991958 to the data link connector.
(2) Turn the ignition switch to the "ON" position.
(3) Set scan tool MB991958 to data reading mode.
- Item 34: Transmission Range Switch.
  - Move the selector lever to "P," "R," "N," "D" and sport mode positions and confirm that the selected transmission ranges match the positions (The scan tool displays "D" range when the selector lever is shifted to the sport mode).

(4) Turn the ignition switch to the "LOCK" (OFF) position.

Q: Is the switch operating properly?

YES : It can be assumed that this malfunction is intermittent. Refer to GROUP 00, How to Use Troubleshooting/Inspection Service Points – How to Cope with Intermittent Malfunction P.00-14.

NO : Replace the PCM.

DTC P1773 (P0753): Low-Reverse Solenoid Valve

Solenoid Valve System Circuit <4A/T>

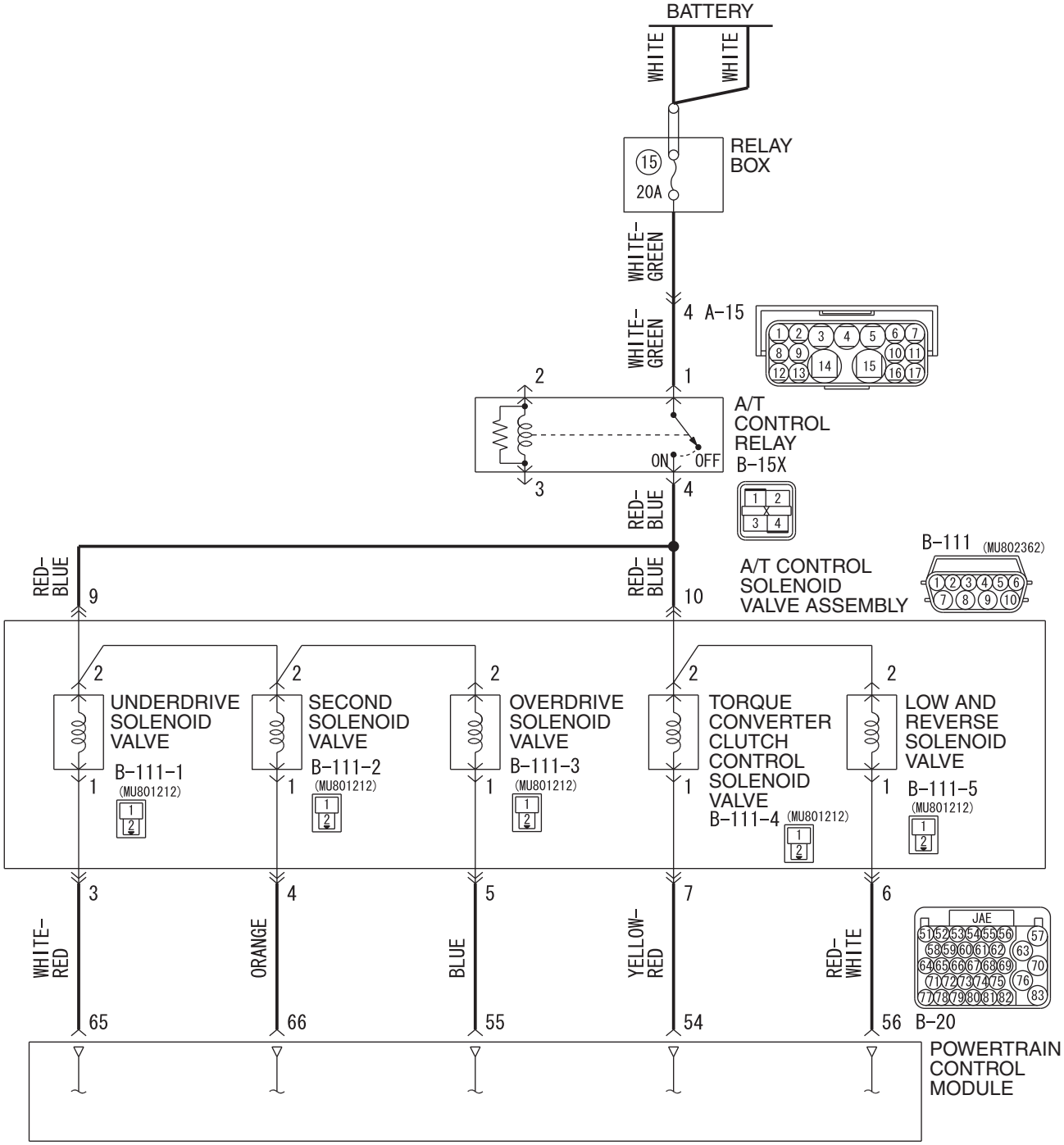

AC808353AB

Solenoid Valve System Circuit <5A/T>

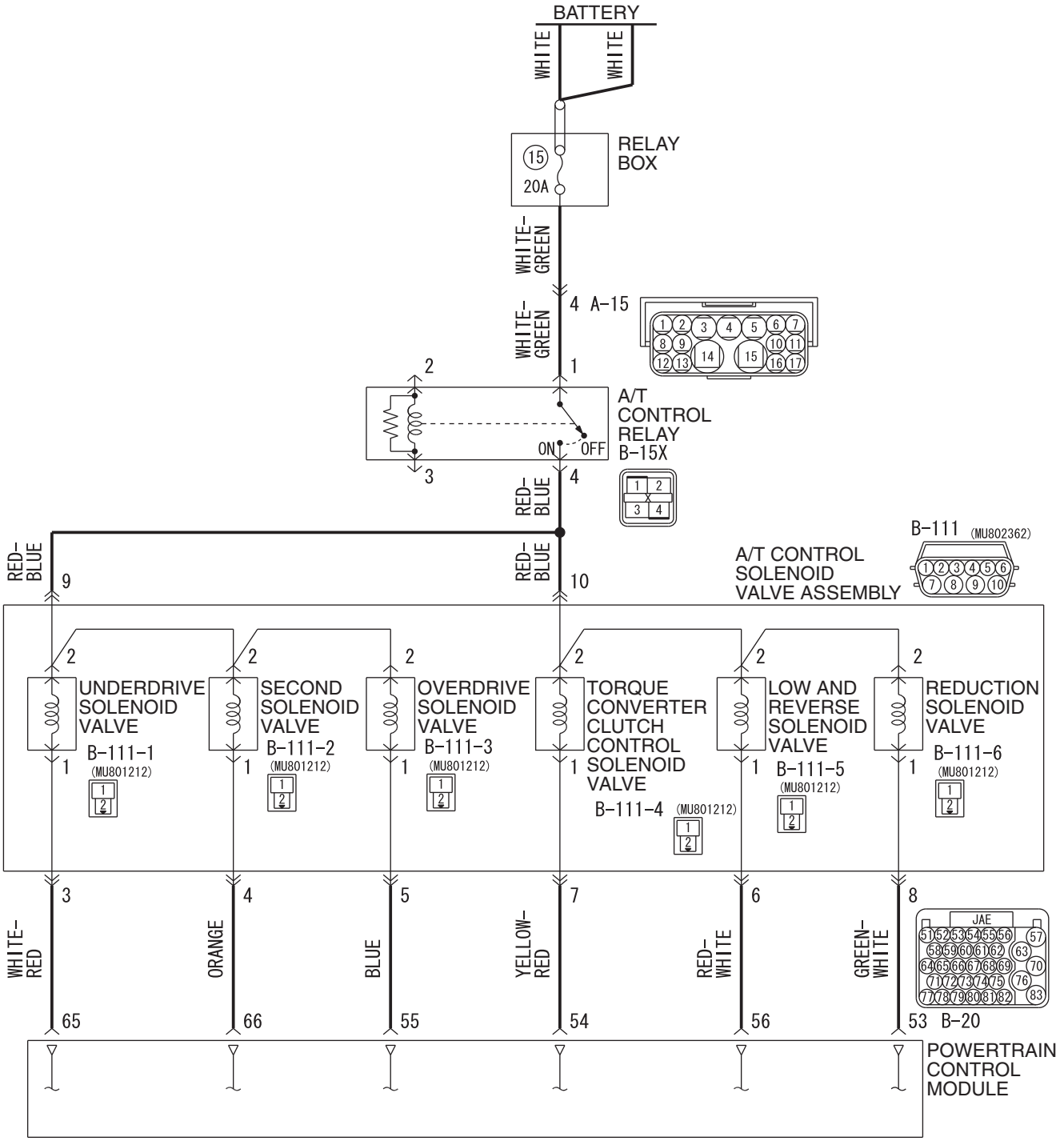

W6P23M009A
AC406565 AB

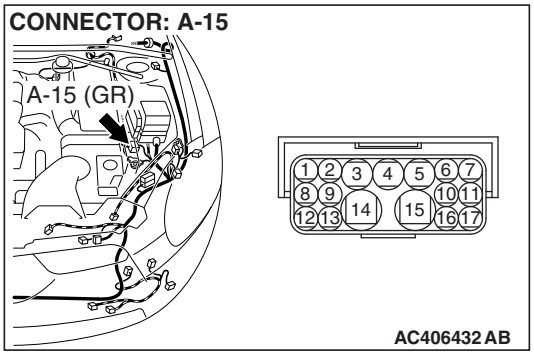

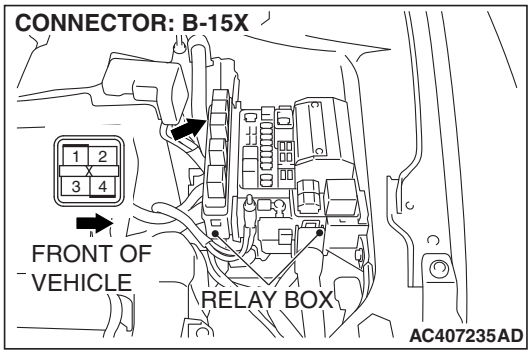

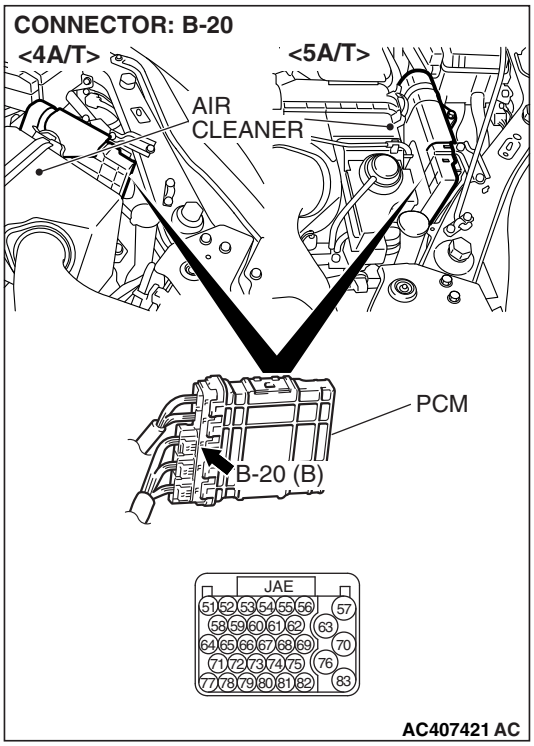

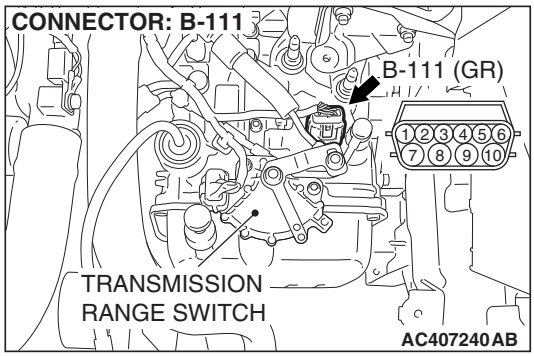

CIRCUIT OPERATION

- The A/T control relay supplies battery positive voltage to the solenoid valve assembly (terminals 9 and 10).
- The solenoid valve closes when energized (on), and opens when not energized (off). The PCM energizes the solenoid valve based on input data from sensors such as the Throttle Position Sensor, Transmission Range Switch, Stoplight Switch, Input Shaft Speed Sensor, Output Shaft Speed Sensor, and Transmission Fluid Temperature Sensor.
- The PCM provides the ground to energize the solenoid. The amount of time that the circuit is grounded is displayed on scan tool MB991958 in percent.
- When the solenoid is energized or de-energized, fluid passes through the valve body and transaxle passages to apply and release components.

DESCRIPTIONS OF MONITOR METHODS

- If solenoid terminal voltage is below specified value when shift control is not in progress, PCM judges that low-reverse solenoid valve has a failure.

MONITOR EXECUTION

- Continuous

MONITOR EXECUTION CONDITIONS (OTHER MONITOR AND SENSOR)

Other Monitor (There is no temporary DTC stored in memory for the item monitored below)

- DTC P1779 (P0731): 1st gear incorrect ratio
- DTC P1780 (P0732): 2nd gear incorrect ratio
- DTC P1781 (P0733): 3rd gear incorrect ratio
- DTC P1782 (P0734): 4th gear incorrect ratio
- DTC P1783 (P0735): 5th gear incorrect ratio <5A/T>

- DTC P1784 (P0736): Reverse gear incorrect ratio
- DTC P1778 (P0743): Torque converter clutch solenoid malfunction
- DTC P1774 (P0758): Underdrive solenoid malfunction
- DTC P1775 (P0763): Second solenoid malfunction
- DTC P1776 (P0768): Overdrive solenoid malfunction
- DTC P1777 (P0773): Reduction solenoid malfunction <5A/T>
- DTC P1788 (P1751): A/T control relay malfunction

Sensor (The sensor below is determined to be normal)

- Torque converter clutch solenoid
- Underdrive solenoid
- Second solenoid
- Overdrive solenoid
- Reduction solenoid <5A/T>
- A/T control relay

LOGIC FLOW CHARTS (Monitor Sequence)

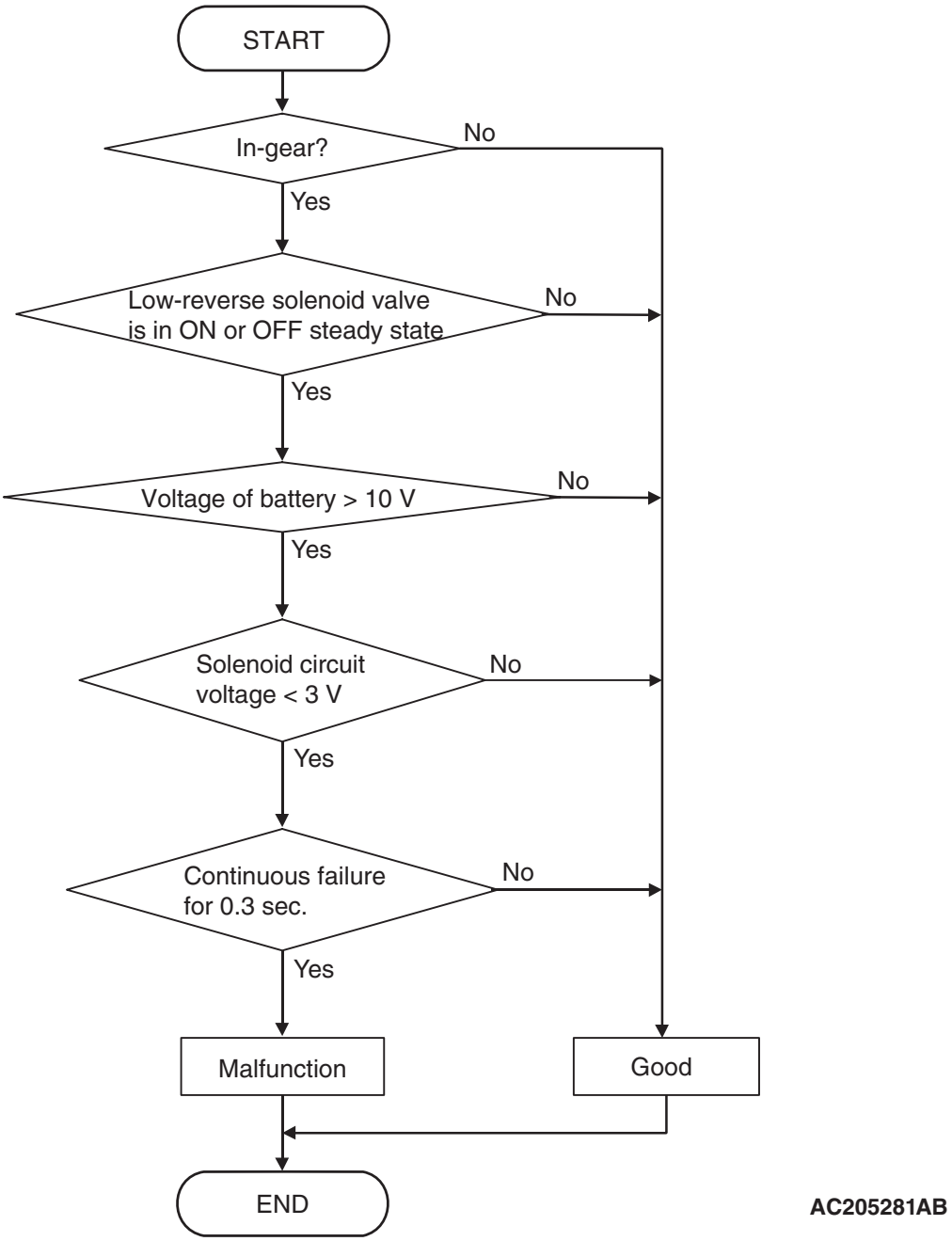

TSB Revision

DTC SET CONDITIONS

Check Conditions

- Solenoid status: either solid ON or OFF.
- Shift status: in-gear.
- Voltage of battery: 10 volts or more.

Judgement Criteria

- Solenoid voltage: 3 volts or less. (0.3 second)
- If DTC P1773 (P0753) is set consecutively four times, the transaxle is locked into 3rd gear as a fail-safe measure, and the selector lever position indicator light (D, 1 through 4 or 5) flashes once per second.

OBD-II DRIVE CYCLE PATTERN

Start the engine, and keep the vehicle stopped in "P" range for 5 seconds.

TROUBLESHOOTING HINTS (THE MOST LIKELY CAUSES FOR THIS CODE TO BE SET ARE:)

- Malfunction of the low-reverse solenoid valve
- Damaged harness or connector
- Malfunction of the PCM

DIAGNOSIS

Required Special Tools:

- MB991958: Scan Tool (M.U.T.-III Sub Assembly)
  - MB991824: V.C.I.
  - MB991827: M.U.T.-III USB Cable
  - MB991910: M.U.T.-III Main Harness A

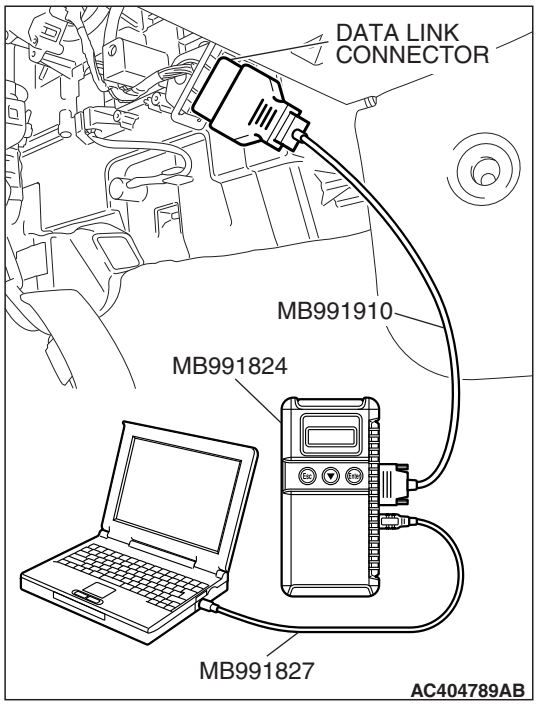

STEP 1. Using scan tool MB991958, check actuator test item 1: Low-Reverse Solenoid Valve.

⚠ CAUTION

To prevent damage to scan tool MB991958, always turn the ignition switch to the "LOCK" (OFF) position before connecting or disconnecting scan tool MB991958.

(1) Connect scan tool MB991958 to the data link connector.
(2) Turn the ignition switch to the "ON" position.
(3) Set scan tool MB991958 to the actuator test mode.
  - Item 1: Low-Reverse Solenoid Valve.
    - An audible clicking or buzzing should be heard when the low-reverse solenoid valve is energized.

(4) Turn the ignition switch to the "LOCK" (OFF) position.

Q: Is the solenoid valve operating properly?

YES : It can be assumed that this malfunction is intermittent. Refer to GROUP 00, How to Use Troubleshooting/Inspection Service Points – How to Cope with Intermittent Malfunctions P.00-14.

NO : Go to Step 2.

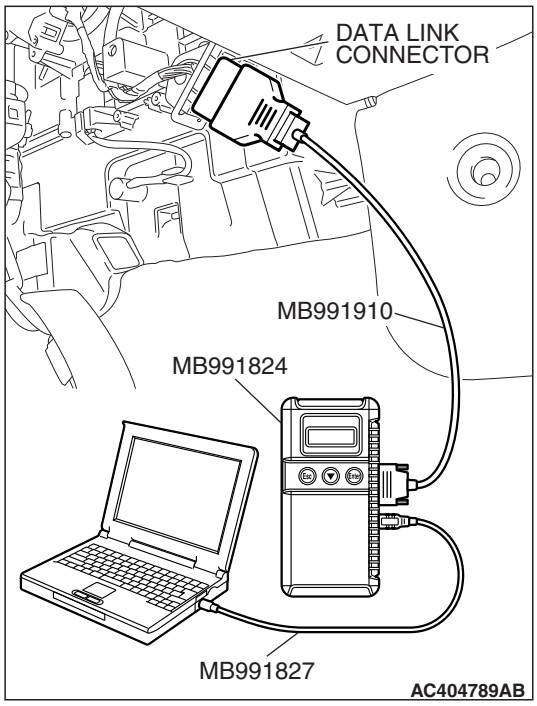

STEP 2. Using scan tool MB991958, read the A/T diagnostic trouble code.

(1) Connect scan tool MB991958 to the data link connector.
(2) Turn the ignition switch to the "ON" position.
(3) Check for A/T diagnostic trouble code.
(4) Turn the ignition switch to the "LOCK" (OFF) position.

Q: Is DTC P1788 (P1751) set? (DTC P1788 (P1751) may be set along with multiple DTCs).

YES : Refer to P.23A-286 DTC P1788 (P1751): A/T Control Relay System.

NO : Go to Step 3.

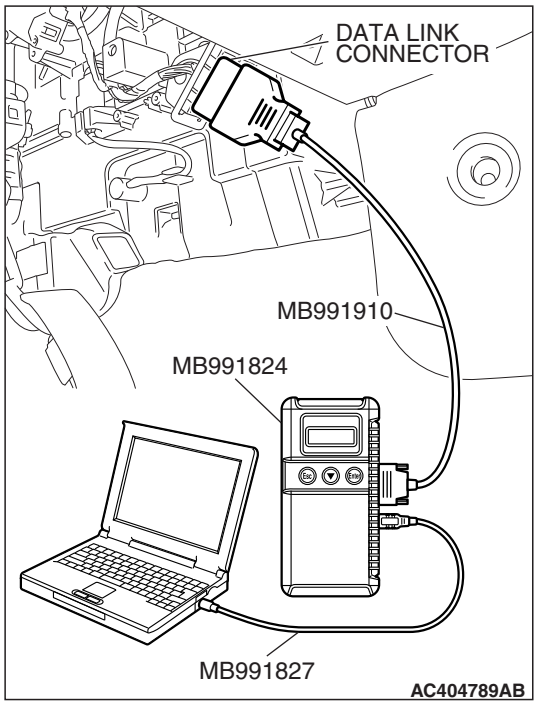

STEP 3. Using scan tool MB991958, read the A/T diagnostic trouble code.

(1) Connect scan tool MB991958 to the data link connector.
(2) Turn the ignition switch to the "ON" position.
(3) Check for A/T diagnostic trouble code.
(4) Turn the ignition switch to the "LOCK" (OFF) position.

Q: Is DTC P1778 (P0743) set?

YES : Go to Step 8.

NO : Go to Step 4.

STEP 4. Measure the low-reverse solenoid valve resistance at A/T control solenoid valve assembly connector B-111.

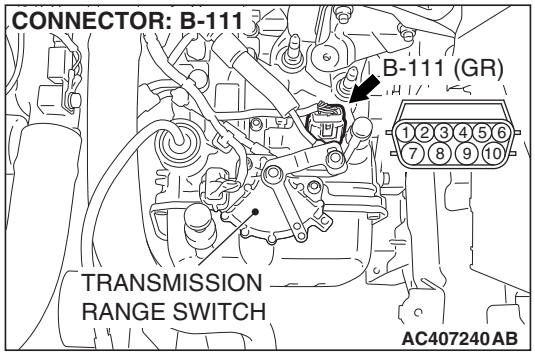

(1) Disconnect connector B-111 and measure at the solenoid valve side.

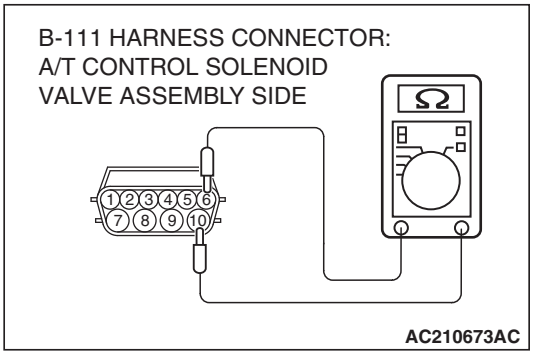

(2) Measure the resistance between solenoid valve assembly connector B-111 terminals 6 and 10.

Resistance value: 2.7–3.4 Ω [at 20°C (68°F)]

Q: Is the measured resistance 2.7–3.4 Ω [at 20°C (68°F)]?

YES : Go to Step 6.
NO : Go to Step 5.

STEP 5. Measure the solenoid valve resistance at the low-reverse solenoid valve assembly inside the transaxle.

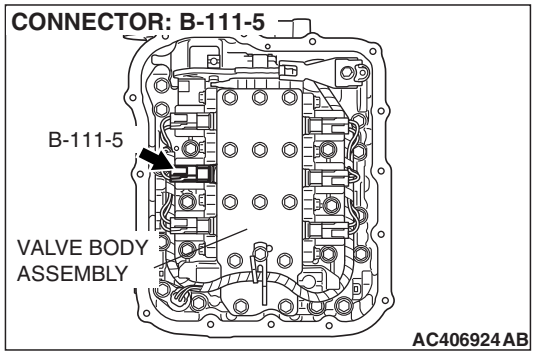

(1) Disconnect connector B-111-5 and measure at the solenoid valve side.

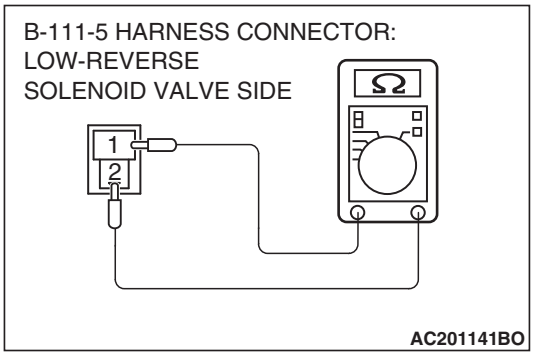

(2) Measure the resistance between low-reverse solenoid valve terminals 1 and 2.

Resistance value: 2.7–3.4 Ω [at 20°C (68°F)]

Q: Is the measured resistance 2.7–3.4 Ω [at 20°C (68°F)?

YES : Replace the harness wire between A/T control solenoid valve assembly connector B-111 and the solenoid valves.
NO : Replace the low-reverse solenoid valve. Refer to GROUP 23B, P.23B-65 Valve Body <4A/T> or Refer to GROUP 23C, P.23C-73 Valve Body <5A/T>.

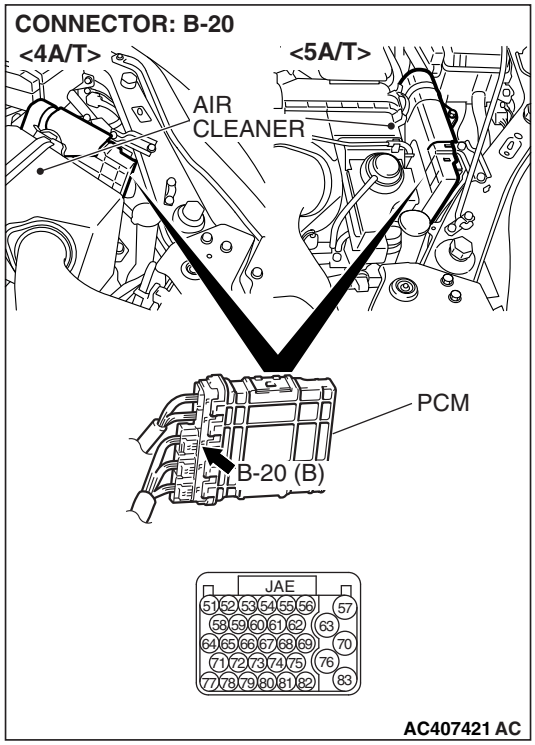

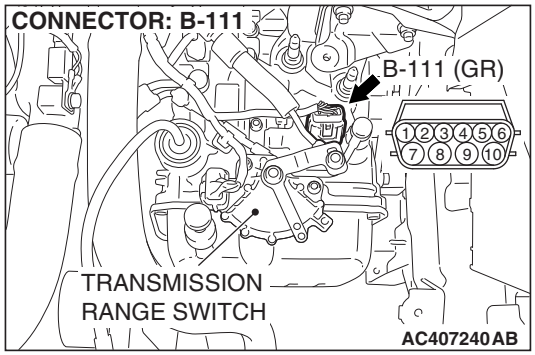

STEP 6. Check PCM connector B-20 and A/T control solenoid valve assembly connector B-111 for loose, corroded or damaged terminals, or terminals pushed back in the connector.

Q: Are the connectors and terminals in good condition?

YES : Go to Step 7.

NO : Repair or replace the damaged components. Refer to GROUP 00E, Harness Connector Inspection P.00E-2.

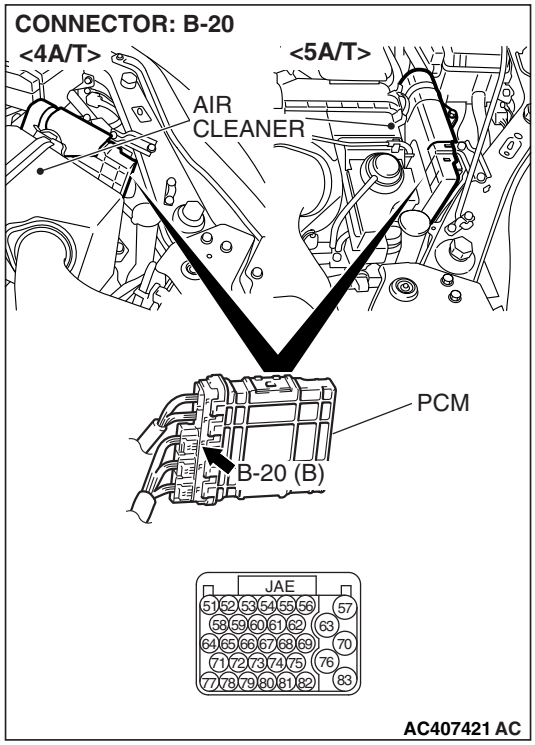

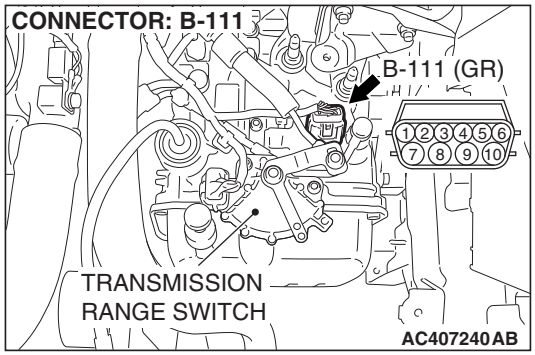

STEP 7. Check the harness for an open or short circuit to ground between PCM connector B-20 terminal 56 and A/T control solenoid valve assembly connector B-111 terminal 6.

Q: Is the harness wire in good condition?

YES : Replace the PCM. When the PCM is replaced, register the encrypted code. Refer to GROUP 54A, Encrypted Code Registration Criteria Table P.54A-19.

NO : Repair or replace the harness wire.

STEP 8. Measure the supply voltage at A/T control solenoid valve assembly connector B-111.

(1) Disconnect solenoid valve assembly harness connector B-111.

(2) Turn the ignition switch to the "ON" position.

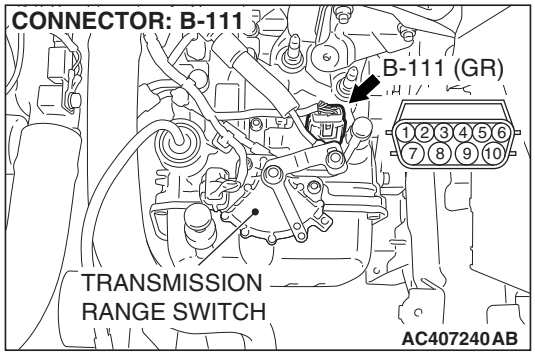

(3) Measure the voltage between harness connector B-111 terminal 10 and ground.
- The voltage should equal battery positive voltage.

(4) Turn the ignition switch to the "LOCK" (OFF) position.

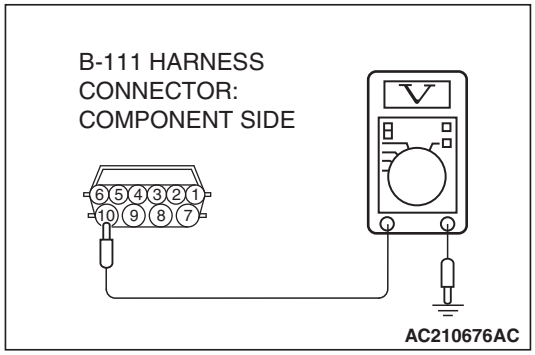

Q: Is the measured voltage battery positive voltage?

YES : Go to Step 11.

NO : Go to Step 9.

STEP 9. Check A/T control relay connector B-15X in the engine component relay box and A/T control solenoid valve assembly connector B-111 for loose, corroded or damaged terminals, or terminals pushed back in the connector.

Q: Are the connectors and terminals in good condition?

YES : Go to Step 10.

NO : Repair or replace the damaged components. Refer to GROUP 00E, Harness Connector Inspection P.00E-2.

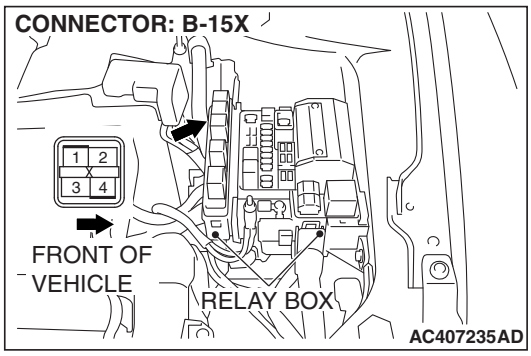

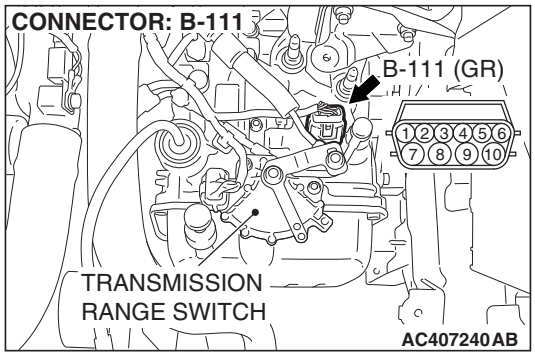

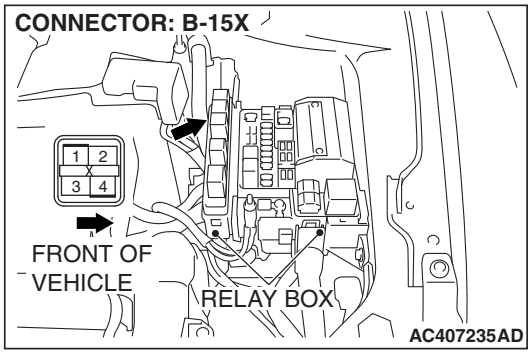

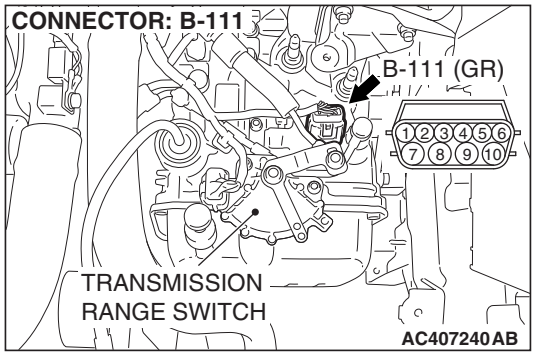

STEP 10. Check the harness for an open circuit or short circuit to ground between A/T control relay connector B-15X terminal 4 in the engine component relay box and A/T control solenoid valve assembly connector B-111 terminal 10.

Q: Is the harness wire in good condition?

YES : Go to Step 11.

NO : Repair or replace the harness wire.

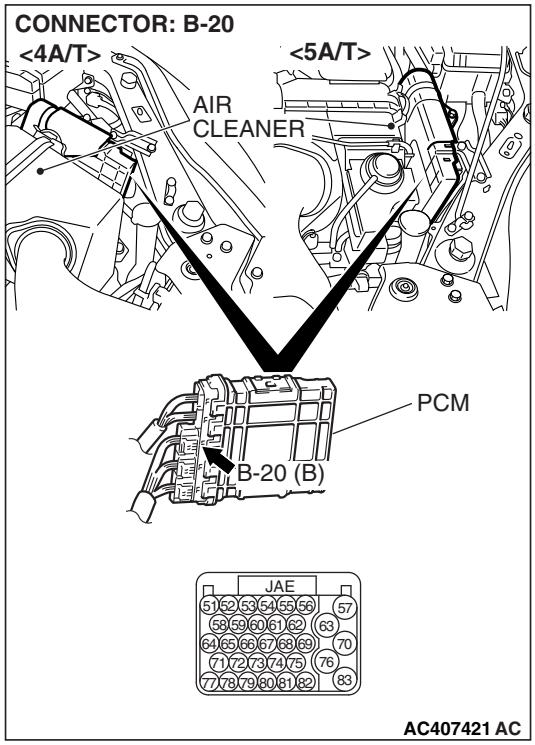

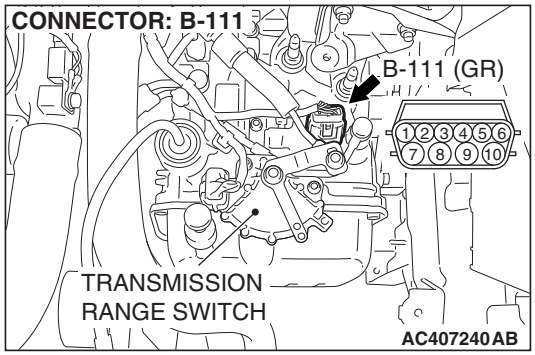

STEP 11. Check PCM connector B-20 and A/T control solenoid valve assembly connector B-111 for loose, corroded or damaged terminals, or terminals pushed back in the connector.

Q: Are the connectors and terminals in good condition?

YES : Go to Step 12.

NO : Repair or replace the damaged components. Refer to GROUP 00E, Harness Connector Inspection P.00E-2.

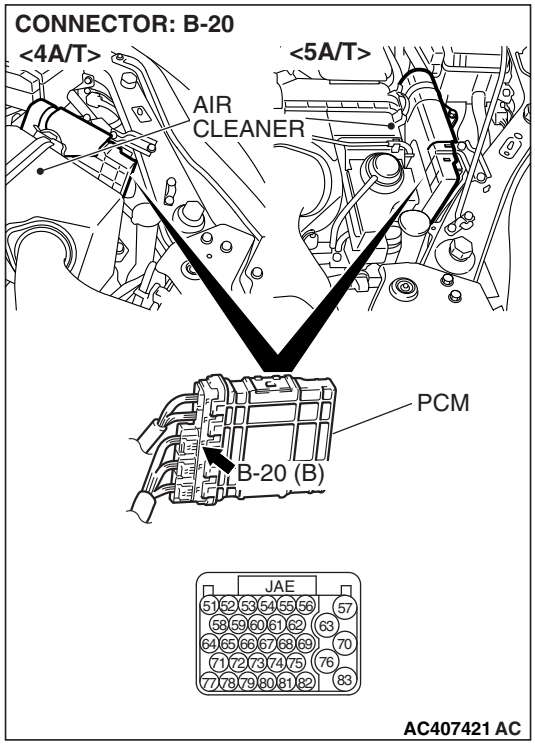

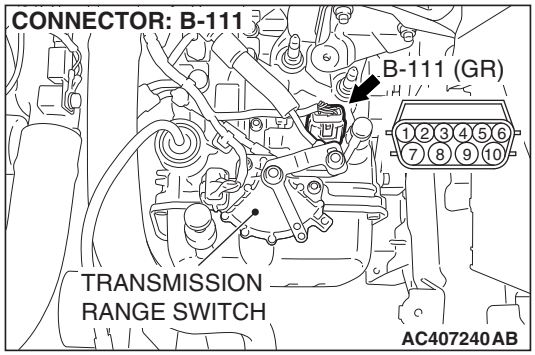

STEP 12. Check the harness for an open or short circuit to ground between PCM connector B-20 (terminals 54, 56 and 53 <5A/T>) and A/T control solenoid valve assembly connector B-111 (terminals 6, 7 and 8 <5A/T>).

Q: Are the harness wires in good condition?

YES : Go to Step 13.

NO : Repair or replace the harness wire.

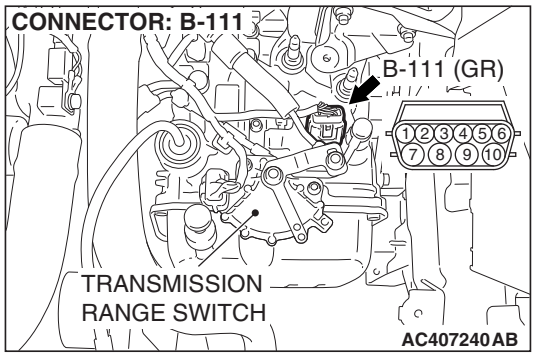

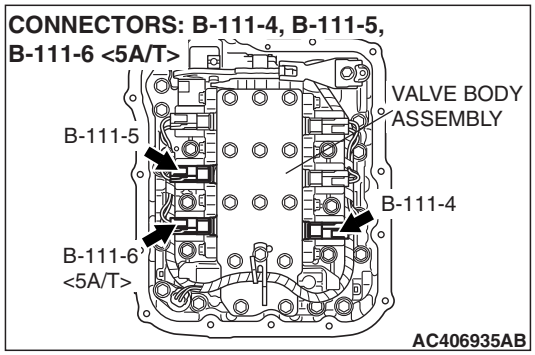

STEP 13. Check the harness for an open or short circuit to ground between A/T control solenoid valve assembly connector B-111 (terminals 6, 7, 8 <5A/T> and 10) and solenoid valve connectors B-111-4, B-111-5 and B-111-6 <5A/T>.

Q: Is the harness wire in good condition?

YES : Replace the PCM. When the PCM is replaced, register the encrypted code. Refer to GROUP 54A, Encrypted Code Registration Criteria Table P.54A-19.

NO : Replace the harness wire.

DTC P1774 (P0758): Underdrive Solenoid Valve System

SOLENOID VALVE SYSTEM CIRCUIT

Refer to P.23A-187.

CIRCUIT OPERATION

Refer to P.23A-187.

DESCRIPTIONS OF MONITOR METHODS

- If solenoid terminal voltage is below specified value when shift control is not in progress, PCM judges that underdrive solenoid valve has a failure.

MONITOR EXECUTION

- Continuous

MONITOR EXECUTION CONDITIONS (OTHER MONITOR AND SENSOR)

Other Monitor (There is no temporary DTC stored in memory for the item monitored below)

- DTC P1779 (P0731): 1st gear incorrect ratio
- DTC P1780 (P0732): 2nd gear incorrect ratio
- DTC P1781 (P0733): 3rd gear incorrect ratio
- DTC P1782 (P0734): 4th gear incorrect ratio
- DTC P1783 (P0735): 5th gear incorrect ratio <5A/T>
- DTC P1784 (P0736): Reverse gear incorrect ratio
- DTC P1778 (P0743): Torque converter clutch solenoid malfunction
- DTC P1773 (P0753): Low-reverse solenoid malfunction
- DTC P1775 (P0763): Second solenoid malfunction
- DTC P1776 (P0768): Overdrive solenoid malfunction
- DTC P1777 (P0773): Reduction solenoid malfunction <5A/T>
- DTC P1788 (P1751): A/T control relay malfunction

Sensor (The sensor below is determined to be normal)

- Torque converter clutch solenoid
- Low-reverse solenoid
- Second solenoid
- Reduction solenoid <5A/T>
- Overdrive solenoid
- A/T control relay

LOGIC FLOW CHARTS (Monitor Sequence)

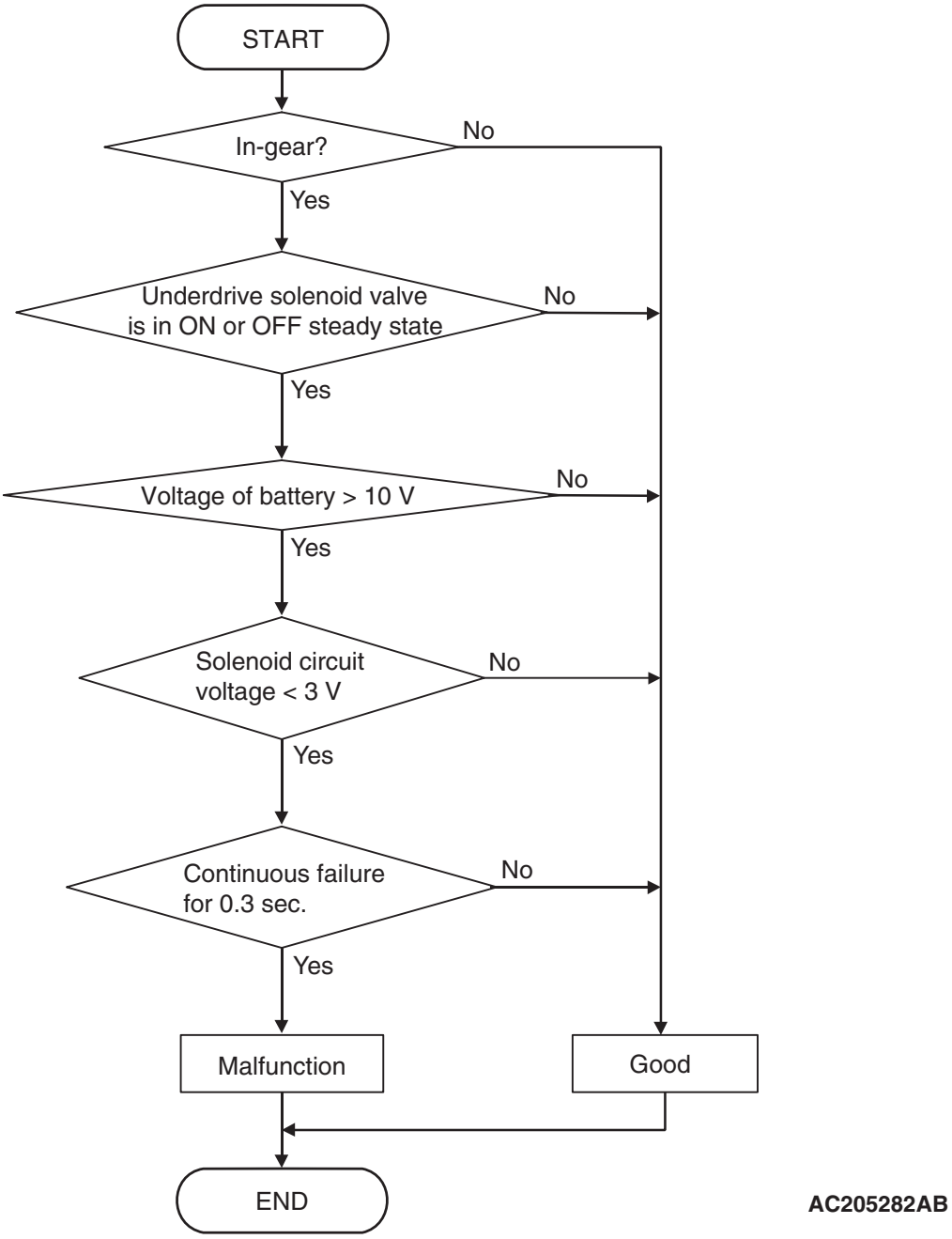

DTC SET CONDITIONS

Check Conditions

- Solenoid status: either solid ON or OFF.
- Shift status: in-gear.
- Voltage of battery: 10 volts or more.

Judgement Criteria

- Solenoid voltage: 3 volts or less. (0.3 second)
- If DTC P1774 (P0758) is set consecutively four times, the transaxle is locked into 3rd gear as a fail-safe measure, and the selector lever position indicator light (D, 1 through 4 or 5) flashes once per second.

OBD-II DRIVE CYCLE PATTERN

Start the engine, and keep the vehicle stopped in "P" range for 5 seconds.

TROUBLESHOOTING HINTS (THE MOST LIKELY CAUSES FOR THIS CODE TO BE SET ARE:)

- Malfunction of the underdrive solenoid valve
- Damaged harness or connector
- Malfunction of the PCM

TSB Revision

DIAGNOSIS

Required Special Tools:

- MB991958: Scan Tool (M.U.T.-III Sub Assembly)
  - MB991824: V.C.I.
  - MB991827: M.U.T.-III USB Cable
  - MB991910: M.U.T.-III Main Harness A

STEP 1. Using scan tool MB991958, check actuator test item 2: Underdrive Solenoid Valve.

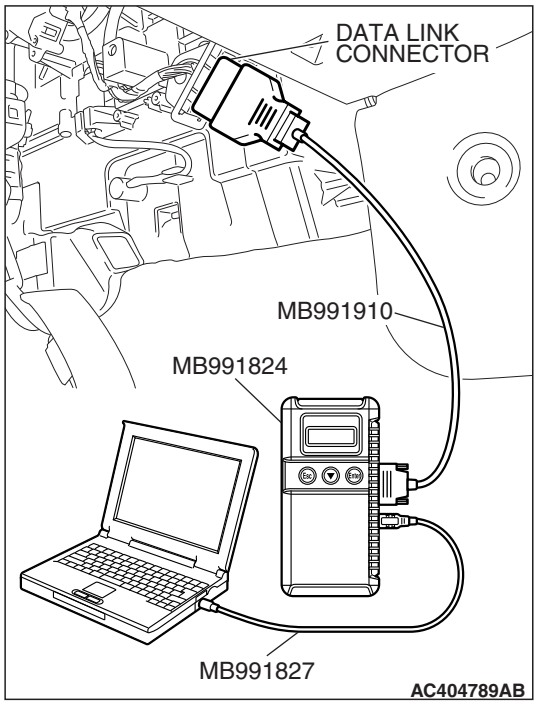

⚠ CAUTION

To prevent damage to scan tool MB991958, always turn the ignition switch to the "LOCK" (OFF) position before connecting or disconnecting scan tool MB991958.

(1) Connect scan tool MB991958 to the data link connector.
(2) Turn the ignition switch to the "ON" position.
(3) Set scan tool MB991958 to the actuator test mode.
- Item 2: Underdrive Solenoid Valve.
  - An audible clicking or buzzing should be heard when the underdrive solenoid valve is energized.

(4) Turn the ignition switch to the "LOCK" (OFF) position.

Q: Is the solenoid valve operating properly?

YES : It can be assumed that this malfunction is intermittent. Refer to GROUP 00, How to Use Troubleshooting/Inspection Service Points – How to Cope with Intermittent Malfunctions P.00-14.

NO : Go to Step 2.

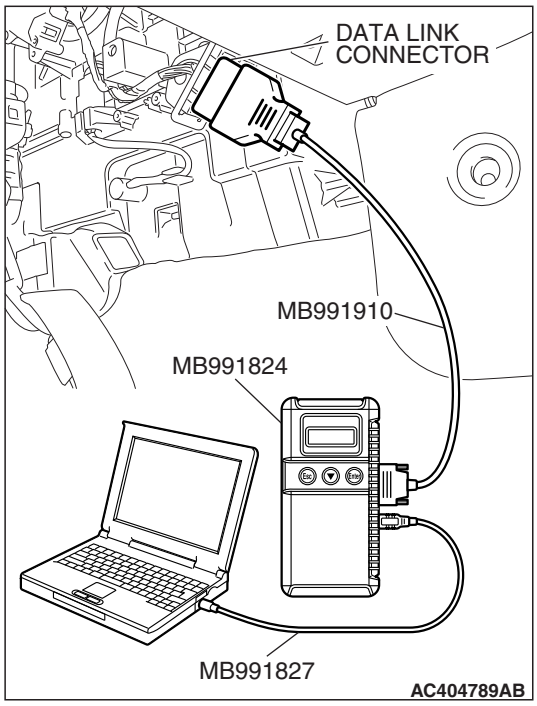

STEP 2. Using scan tool MB991958, read the A/T diagnostic trouble code.

(1) Connect scan tool MB991958 to the data link connector.
(2) Turn the ignition switch to the "ON" position.
(3) Check for A/T diagnostic trouble code.
(4) Turn the ignition switch to the "LOCK" (OFF) position.

Q: Is DTC P1788 (P1751) set? (DTC P1788 (P1751) may be set along with multiple DTCs).

YES : Refer to P.23A-286 DTC P1788 (P1751): A/T Control Relay System.
NO : Go to Step 3.

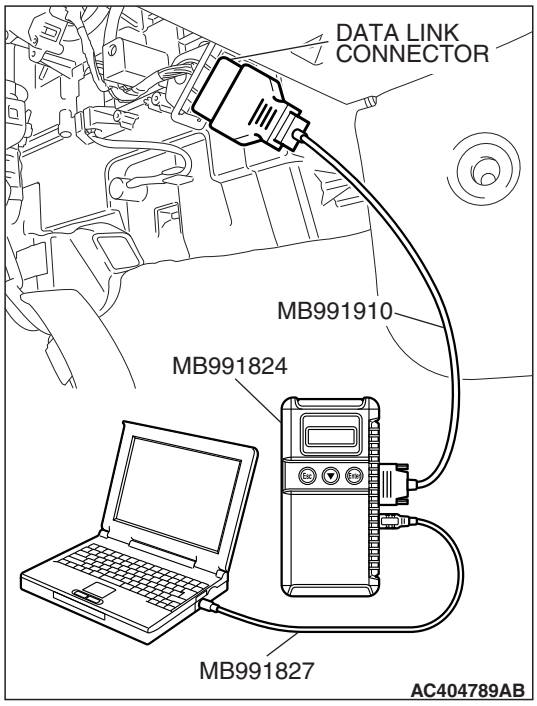

STEP 3. Using scan tool MB991958, read the A/T diagnostic trouble code.

(1) Connect scan tool MB991958 to the data link connector.
(2) Turn the ignition switch to the "ON" position.
(3) Check for A/T diagnostic trouble code.
(4) Turn the ignition switch to the "LOCK" (OFF) position.

Q: Are DTC P1775 (P0763) and DTC P1776 (P0768) set? (Multiple DTCs may be set).

YES : Go to Step 8.
NO : Go to Step 4.

STEP 4. Measure the underdrive solenoid valve resistance at A/T control solenoid valve assembly connector B-111.

(1) Disconnect connector B-111 and measure at the solenoid valve side.

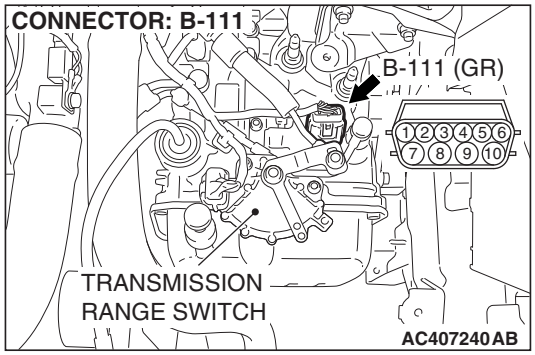

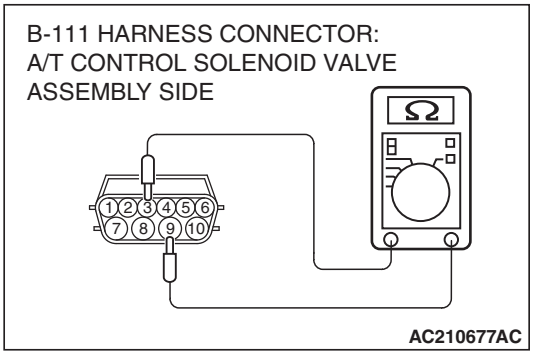

(2) Measure the resistance between solenoid valve assembly connector B-111 terminals 3 and 9.

Resistance value: 2.7–3.4 Ω [at 20°C (68°F)]

Q: Is the measured resistance 2.7–3.4 Ω [at 20°C (68°F)]?

YES : Go to Step 6.
NO : Go to Step 5.

STEP 5. Measure the solenoid valve resistance at the underdrive solenoid valve assembly inside the transaxle.

(1) Disconnect connector B-111-1 and measure at the solenoid valve side.

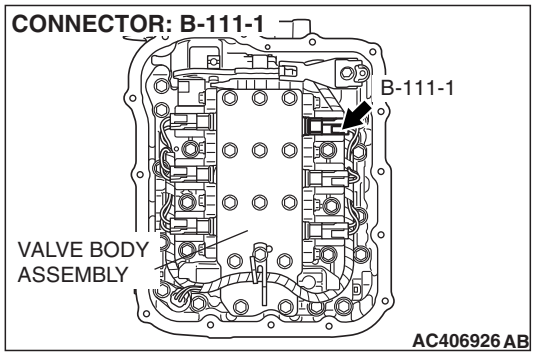

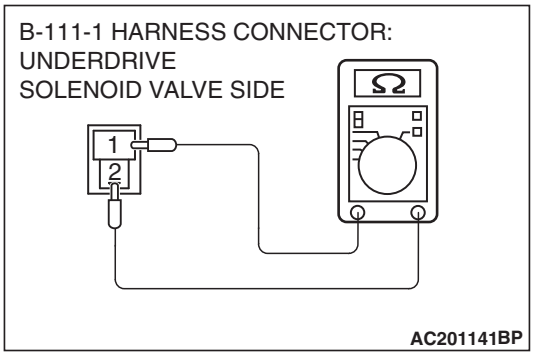

(2) Measure the resistance between Underdrive solenoid valve terminals 1 and 2.

Resistance value: 2.7–3.4 Ω [at 20°C (68°F)]

Q: Is the measured resistance 2.7–3.4 Ω [at 20°C (68°F)?

YES : Replace the harness wire between A/T control solenoid valve assembly connector B-111 and the solenoid valves.
NO : Replace the Underdrive solenoid valve. Refer to GROUP 23B, P.23B-65 Valve Body <4A/T> or Refer to GROUP 23C, P.23C-73 Valve Body <5A/T>.

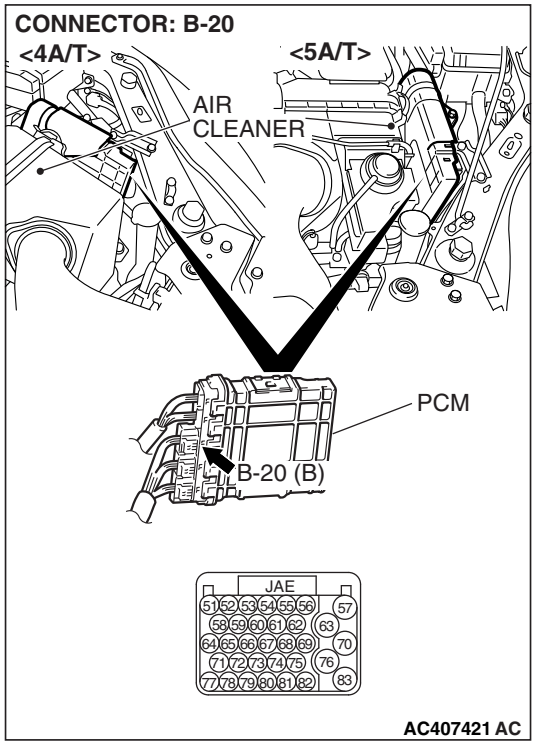

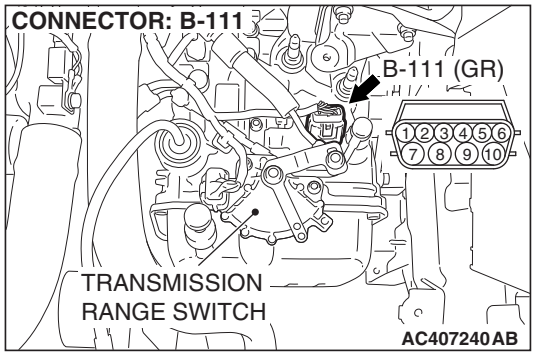

STEP 6. Check PCM connector B-20 and A/T control solenoid valve assembly connector B-111 for loose, corroded or damaged terminals, or terminals pushed back in the connector.

Q: Are the connectors and terminals in good condition?

YES : Go to Step 7.

NO : Repair or replace the damaged components. Refer to GROUP 00E, Harness Connector Inspection P.00E-2.

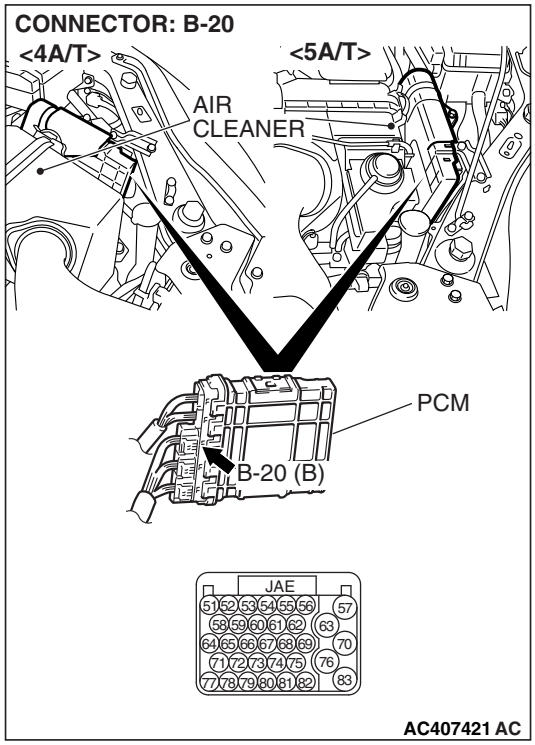

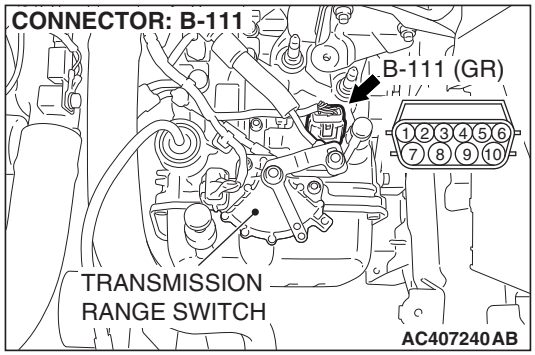

STEP 7. Check the harness for an open or short circuit to ground between PCM connector B-20 terminal 65 and A/T control solenoid valve assembly connector B-111 terminal 3.

Q: Is the harness wire in good condition?

YES : Replace the PCM. When the PCM is replaced, register the encrypted code. Refer to GROUP 54A, Encrypted Code Registration Criteria Table P.54A-19.

NO : Repair or replace the harness wire.

STEP 8. Measure the supply voltage at A/T control solenoid valve assembly connector B-111.

(1) Disconnect solenoid valve assembly harness connector B-111.
(2) Turn the ignition switch to the "ON" position.

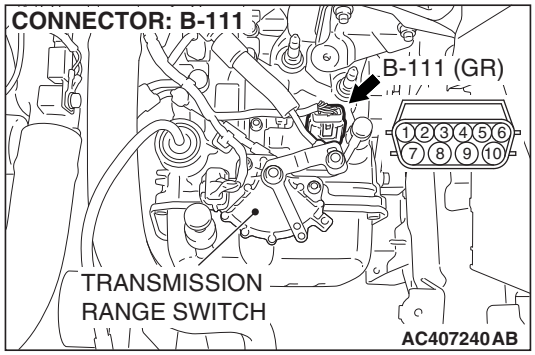

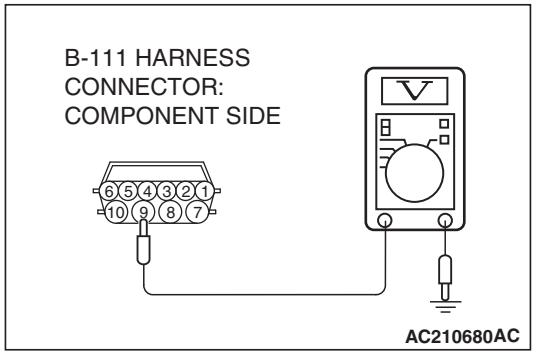

(3) Measure the voltage between harness connector B-111 terminal 9 and ground.
- The voltage should equal battery positive voltage.

(4) Turn the ignition switch to the "LOCK" (OFF) position.

Q: Is the measured voltage battery positive voltage?

YES : Go to Step 11.
NO : Go to Step 9.

STEP 9. Check A/T control relay connector B-15X in the engine component relay box and A/T control solenoid valve assembly connector B-111 for loose, corroded or damaged terminals, or terminals pushed back in the connector.

Q: Are the connectors and terminals in good condition?

YES : Go to Step 10.
NO : Repair or replace the damaged components. Refer to GROUP 00E, Harness Connector Inspection P.00E-2.

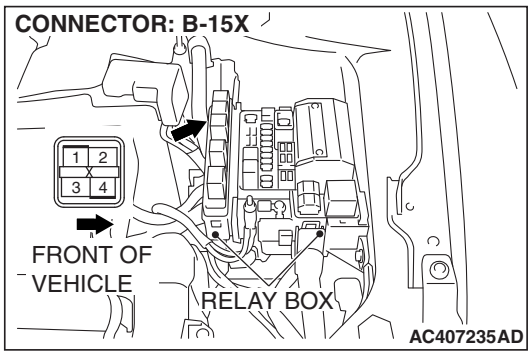

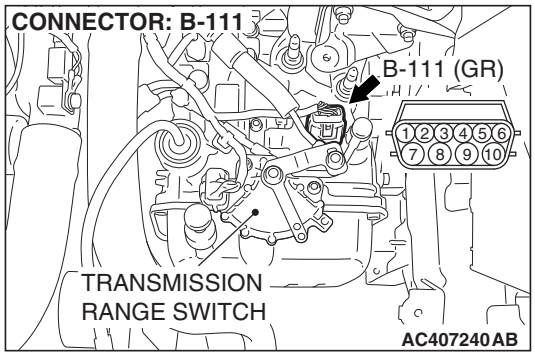

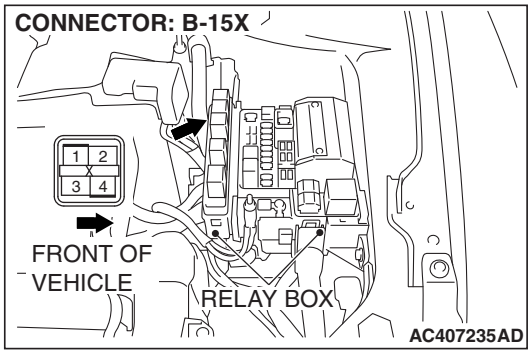

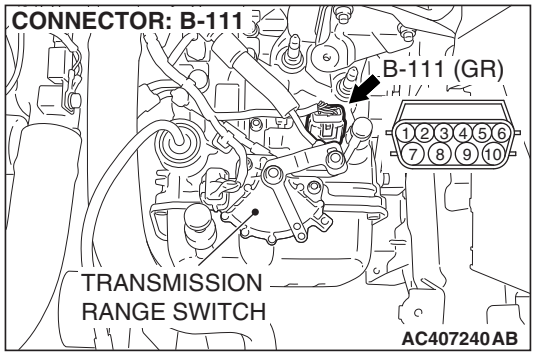

STEP 10. Check the harness for an open circuit or short circuit to ground between A/T control relay connector B-15X terminal 4 in the engine component relay box and A/T control solenoid valve assembly connector B-111 terminal 9.

Q: Is the harness wire in good condition?

YES : Go to Step 11.

NO : Repair or replace the harness wire.

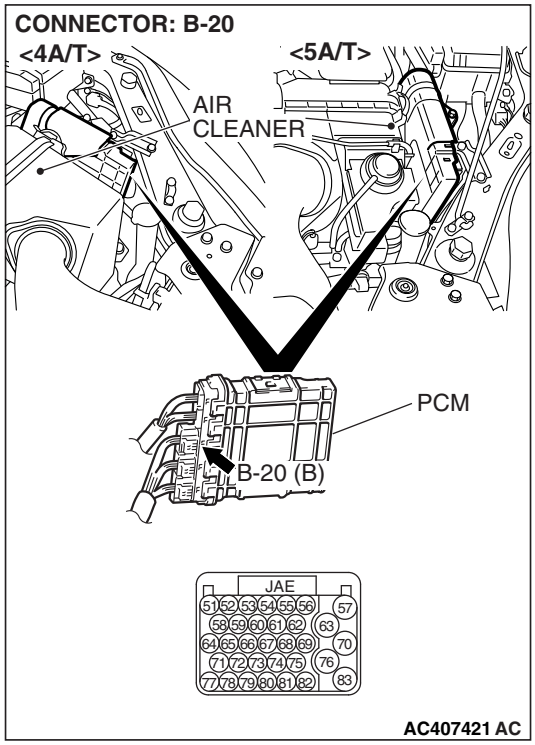

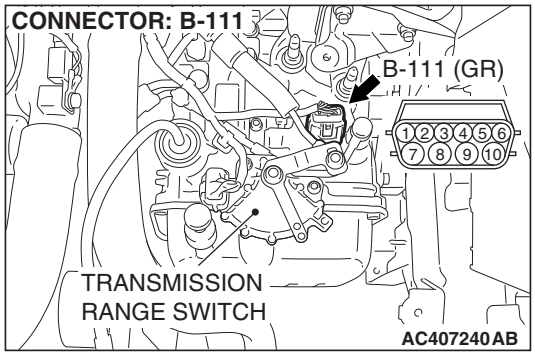

STEP 11. Check PCM connector B-20 and A/T control solenoid valve assembly connector B-111 for loose, corroded or damaged terminals, or terminals pushed back in the connector.

Q: Are the connectors and terminals in good condition?

YES : Go to Step 12.

NO : Repair or replace the damaged components. Refer to GROUP 00E, Harness Connector Inspection P.00E-2.

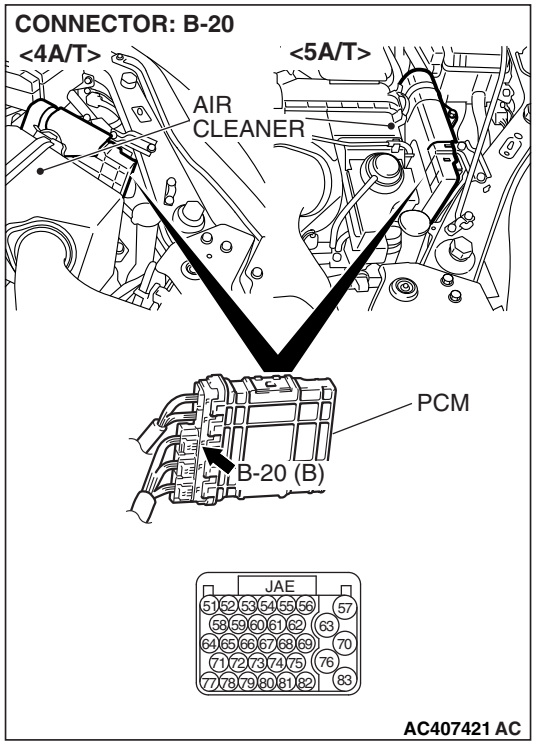

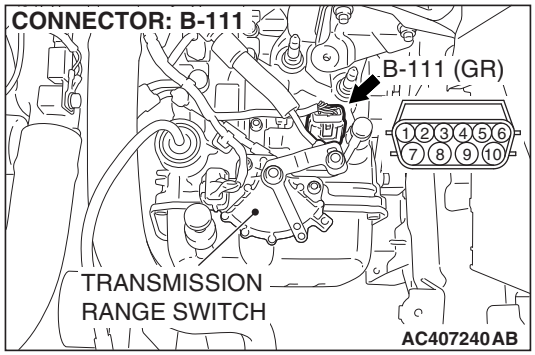

STEP 12. Check the harness for an open or short circuit to ground between PCM connector B-20 (terminals 65, 66 and 55) and A/T control solenoid valve assembly connector B-111 (terminals 3, 4 and 5).

Q: Are the harness wires in good condition?

YES : Go to Step 13.

NO : Repair or replace the harness wire.

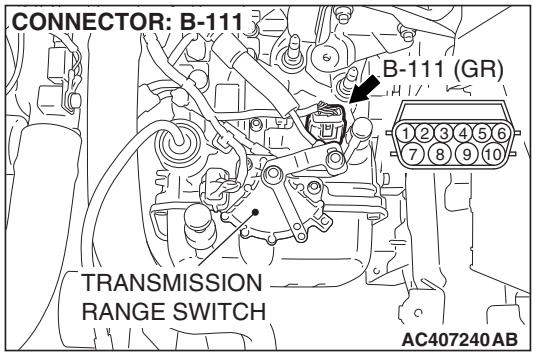

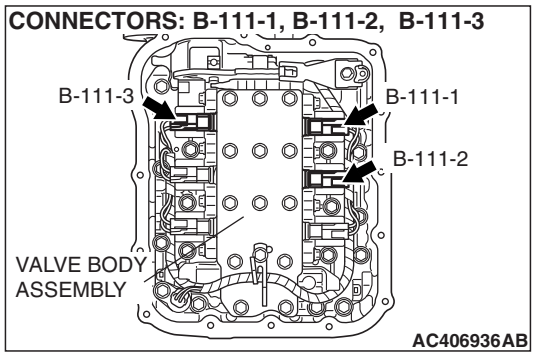

STEP 13. Check the harness for an open or short circuit to ground between A/T control solenoid valve assembly connector B-111 (terminals 3, 4, 5, and 9) and solenoid valve connectors B-111-1, B-111-2 and B-111-3.

Q: Is the harness wire in good condition?

YES : Replace the PCM. When the PCM is replaced, register the encrypted code. Refer to GROUP 54A, Encrypted Code Registration Criteria Table P.54A-19.

NO : Replace the harness wire.

DTC P1775 (P0763): Second Solenoid Valve System

SOLENOID VALVE SYSTEM CIRCUIT

Refer to P.23A-187.

CIRCUIT OPERATION

Refer to P.23A-187.

DESCRIPTIONS OF MONITOR METHODS

- If solenoid terminal voltage is below specified value when shift control is not in progress, PCM judges that second solenoid valve has a failure.

MONITOR EXECUTION

- Continuous

MONITOR EXECUTION CONDITIONS (OTHER MONITOR AND SENSOR)

Other Monitor (There is no temporary DTC stored in memory for the item monitored below)

- DTC P1779 (P0731): 1st gear incorrect ratio
- DTC P1780 (P0732): 2nd gear incorrect ratio
- DTC P1781 (P0733): 3rd gear incorrect ratio
- DTC P1782 (P0734): 4th gear incorrect ratio
- DTC P1783 (P0735): 5th gear incorrect ratio <5A/T>
- DTC P1784 (P0736): Reverse gear incorrect ratio
- DTC P1778 (P0743): Torque converter clutch solenoid malfunction
- DTC P1773 (P0753): Low-reverse solenoid malfunction
- DTC P1774 (P0758): Underdrive solenoid malfunction
- DTC P1776 (P0768): Overdrive solenoid malfunction
- DTC P1777 (P0773): Reduction solenoid malfunction <5A/T>
- DTC P1788 (P1751): A/T control relay malfunction

Sensor (The sensor below is determined to be normal)

- Torque converter clutch solenoid
- Low-reverse solenoid
- Underdrive solenoid
- Reduction solenoid <5A/T>
- Overdrive solenoid
- A/T control relay

LOGIC FLOW CHARTS (Monitor Sequence)

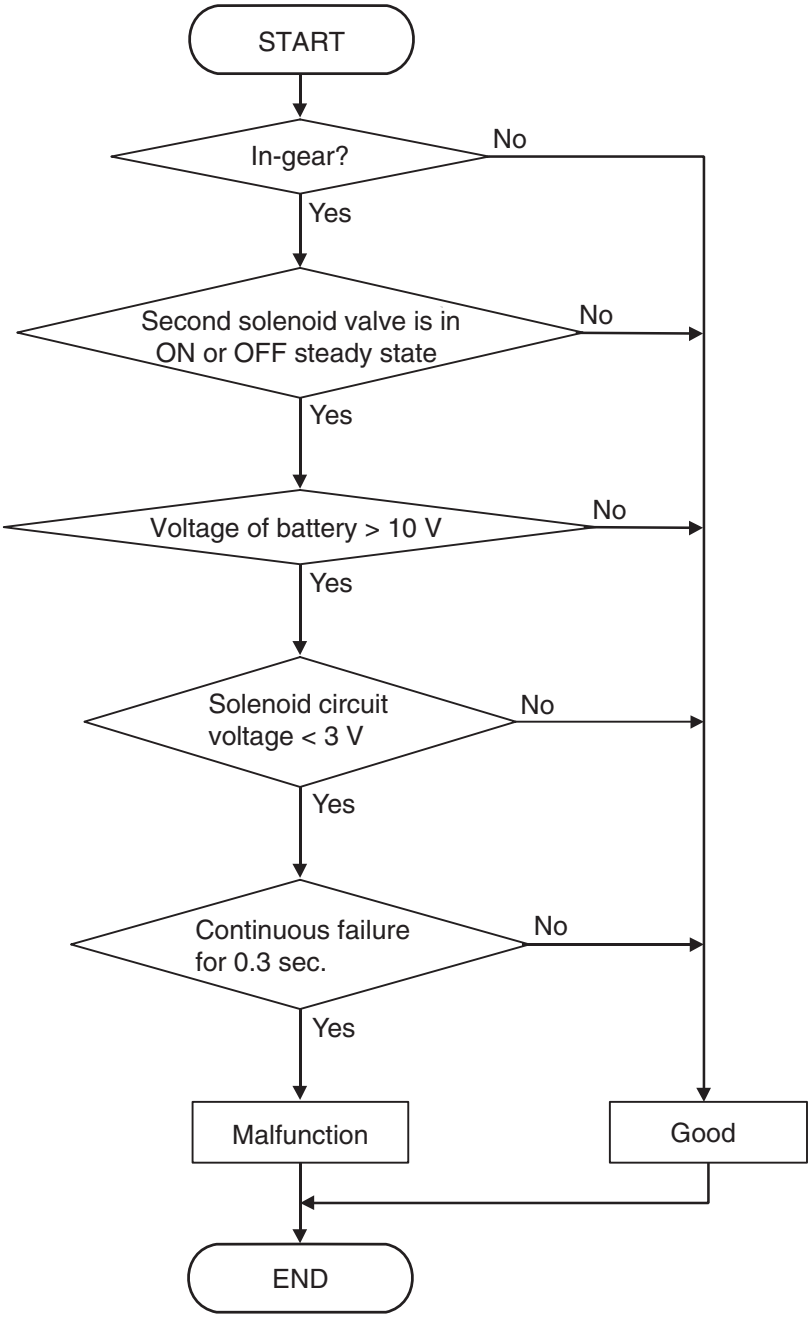

AC205283AB

DTC SET CONDITIONS

Check Conditions

- Solenoid status: either solid ON or OFF.
- Shift status: in-gear.
- Voltage of battery: 10 volts or more.

Judgement Criteria

- Solenoid voltage: 3 volts or less. (0.3 second)
- If DTC P1775 (P0763) is set consecutively four times, the transaxle is locked into 3rd gear as a fail-safe measure, and the selector lever position indicator light (D, 1 through 4 or 5) flashes once per second.

OBD-II DRIVE CYCLE PATTERN

Start the engine, and keep the vehicle stopped in "P" range for 5 seconds.

TROUBLESHOOTING HINTS (THE MOST LIKELY CAUSES FOR THIS CODE TO BE SET ARE:)

- Malfunction of the second solenoid valve
- Damaged harness or connector
- Malfunction of the PCM

TSB Revision

DIAGNOSIS

Required Special Tools:

- MB991958: Scan Tool (M.U.T.-III Sub Assembly)
  - MB991824: V.C.I.
  - MB991827: M.U.T.-III USB Cable
  - MB991910: M.U.T.-III Main Harness A

STEP 1. Using scan tool MB991958, check actuator test item 3: Second Solenoid Valve.

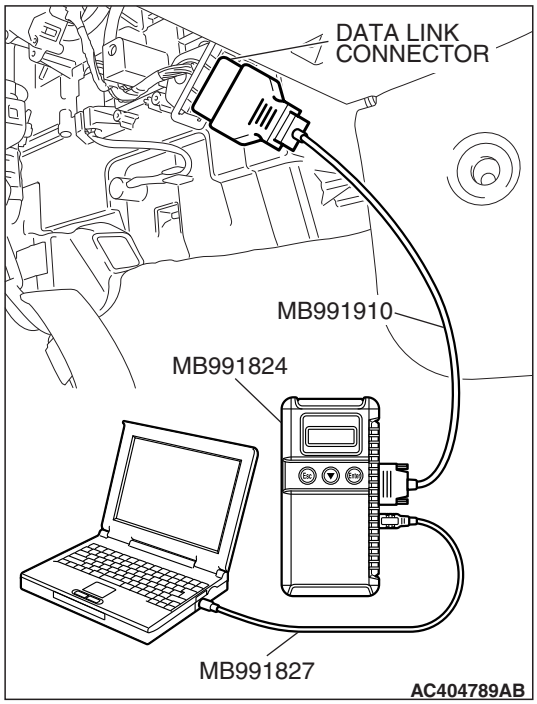

⚠ CAUTION

To prevent damage to scan tool MB991958, always turn the ignition switch to the "LOCK" (OFF) position before connecting or disconnecting scan tool MB991958.

(1) Connect scan tool MB991958 to the data link connector.
(2) Turn the ignition switch to the "ON" position.
(3) Set scan tool MB991958 to the actuator test mode.
- Item 3: Second Solenoid Valve.
  - An audible clicking or buzzing should be heard when the second solenoid valve is energized.

(4) Turn the ignition switch to the "LOCK" (OFF) position.

Q: Is the solenoid valve operating properly?

YES : It can be assumed that this malfunction is intermittent. Refer to GROUP 00, How to Use Troubleshooting/Inspection Service Points – How to Cope with Intermittent Malfunctions P.00-14.

NO : Go to Step 2.

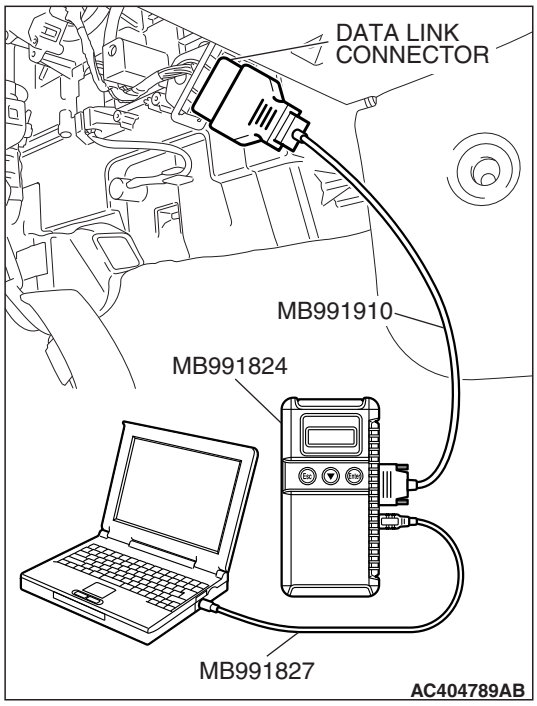

STEP 2. Using scan tool MB991958, read the A/T diagnostic trouble code.

(1) Connect scan tool MB991958 to the data link connector.
(2) Turn the ignition switch to the "ON" position.
(3) Check for A/T diagnostic trouble code.
(4) Turn the ignition switch to the "LOCK" (OFF) position.

Q: Is DTC P1788 (P1751) set? (DTC P1788 (P1751) may be set along with multiple DTCs).

YES : Refer to P.23A-286 DTC P1788 (P1751): A/T Control Relay System.
NO : Go to Step 3.

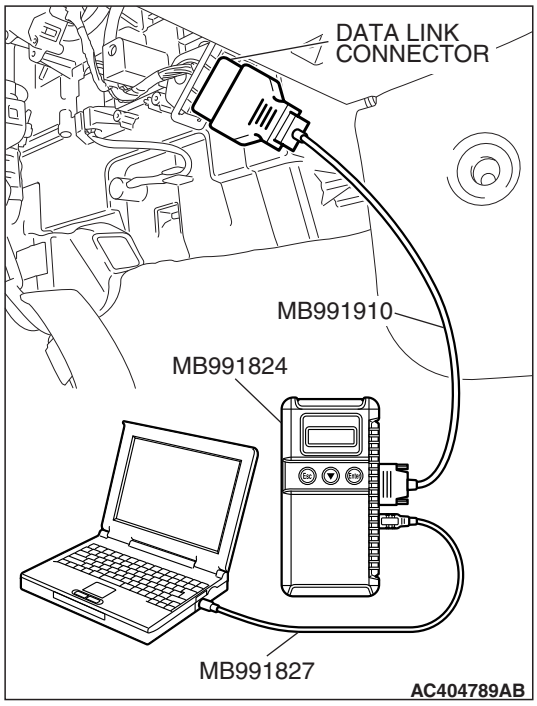

STEP 3. Using scan tool MB991958, read the A/T diagnostic trouble code.

(1) Connect scan tool MB991958 to the data link connector.
(2) Turn the ignition switch to the "ON" position.
(3) Check for A/T diagnostic trouble code.
(4) Turn the ignition switch to the "LOCK" (OFF) position.

Q: Are DTC P1774 (P0758) and DTC P1776 (P0768) set? (Multiple DTCs may be set).

YES : Go to Step 8.
NO : Go to Step 4.

STEP 4. Measure the Second solenoid valve resistance at A/T control solenoid valve assembly connector B-111.

(1) Disconnect connector B-111 and measure at the solenoid valve side.

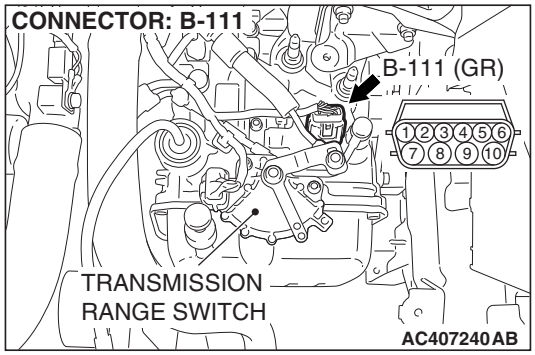

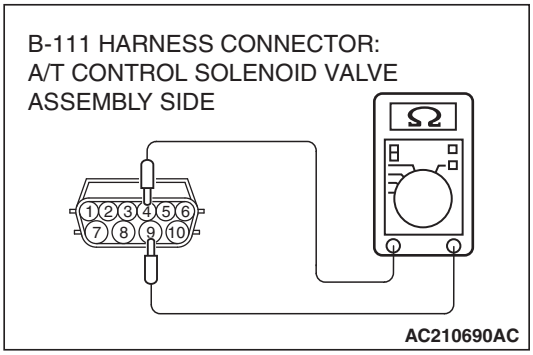

(2) Measure the resistance between solenoid valve assembly connector B-111 terminals 4 and 9.

Resistance value: 2.7–3.4 Ω [at 20°C (68°F)]

Q: Is the measured resistance 2.7–3.4 Ω [at 20°C (68°F)]?

YES : Go to Step 6.
NO : Go to Step 5.

STEP 5. Measure the solenoid valve resistance at the second solenoid valve assembly inside the transaxle.

(1) Disconnect connector B-111-2 and measure at the solenoid valve side.

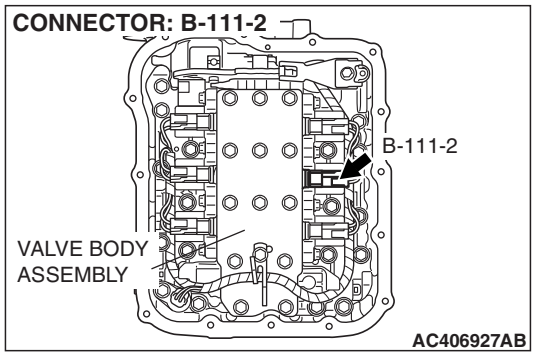

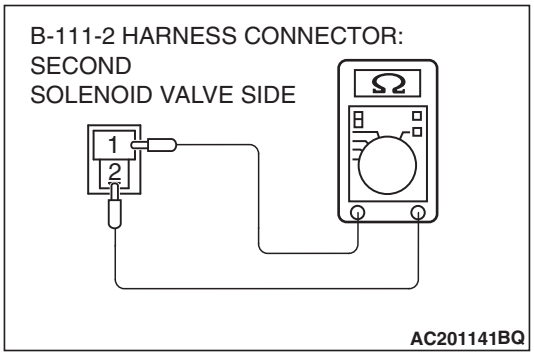

(2) Measure the resistance between Second solenoid valve terminals 1 and 2.

Resistance value: 2.7–3.4 Ω [at 20°C (68°F)]

Q: Is the measured resistance 2.7–3.4 Ω [at 20°C (68°F)?

YES : Replace the harness wire between A/T control solenoid valve assembly connector B-111 and the solenoid valves.
NO : Replace the Second solenoid valve. Refer to GROUP 23B, P.23B-65 Valve Body <4A/T> or Refer to GROUP 23C, P.23C-73 Valve Body <5A/T>.

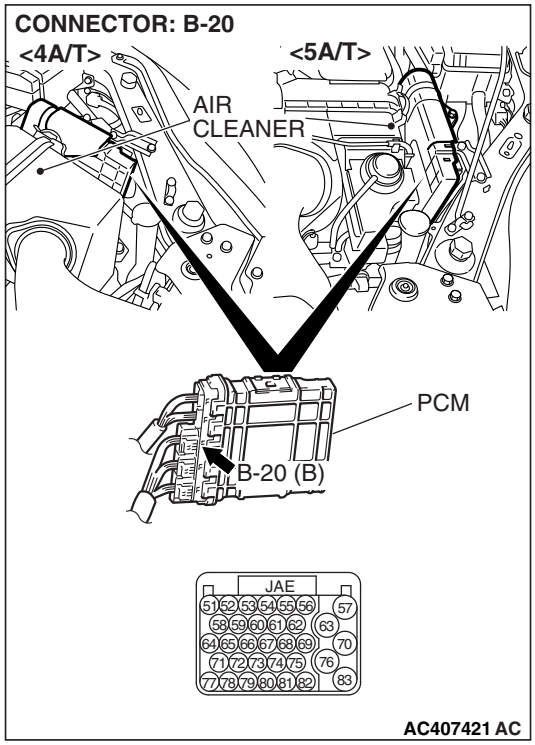

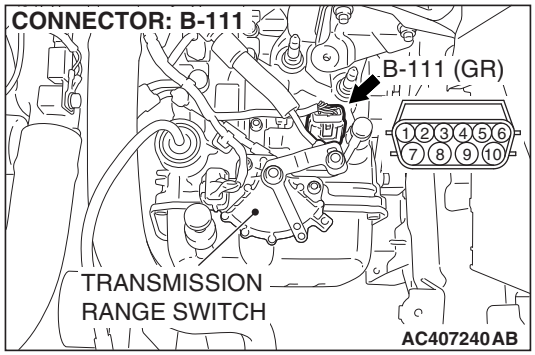

STEP 6. Check PCM connector B-20 and A/T control solenoid valve assembly connector B-111 for loose, corroded or damaged terminals, or terminals pushed back in the connector.

Q: Are the connectors and terminals in good condition?

YES : Go to Step 7.

NO : Repair or replace the damaged components. Refer to GROUP 00E, Harness Connector Inspection P.00E-2.

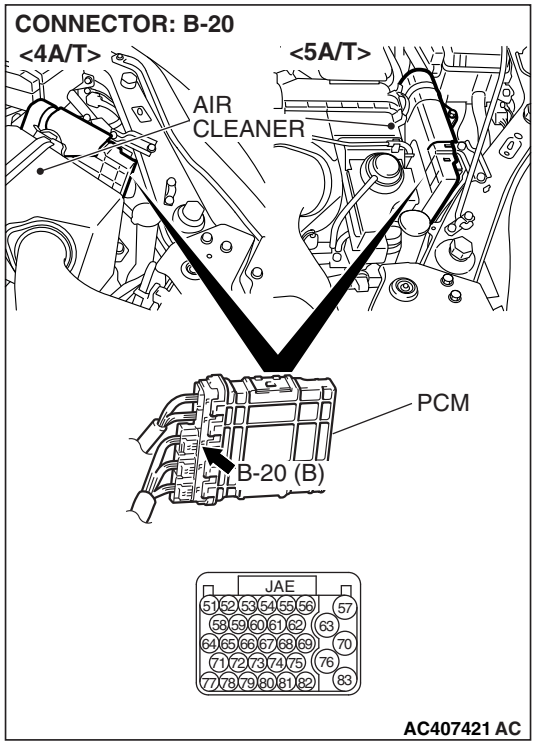

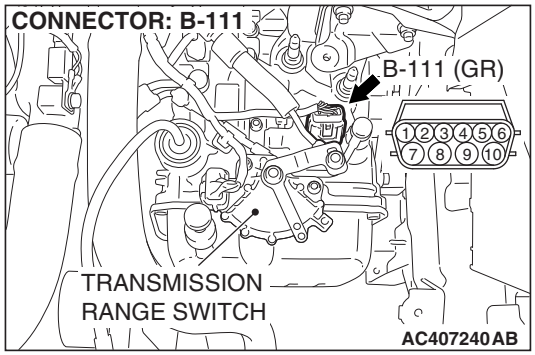

STEP 7. Check the harness for an open or short circuit to ground between PCM connector B-20 terminal 66 and A/T control solenoid valve assembly connector B-111 terminal 4.

Q: Is the harness wire in good condition?

YES : Replace the PCM. When the PCM is replaced, register the encrypted code. Refer to GROUP 54A, Encrypted Code Registration Criteria Table P.54A-19.

NO : Repair or replace the harness wire.

STEP 8. Measure the supply voltage at A/T control solenoid valve assembly connector B-111.

(1) Disconnect solenoid valve assembly harness connector B-111.

(2) Turn the ignition switch to the "ON" position.

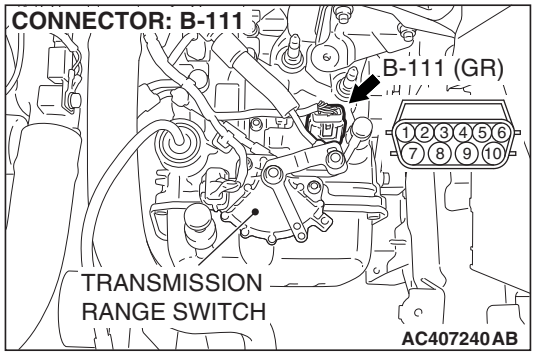

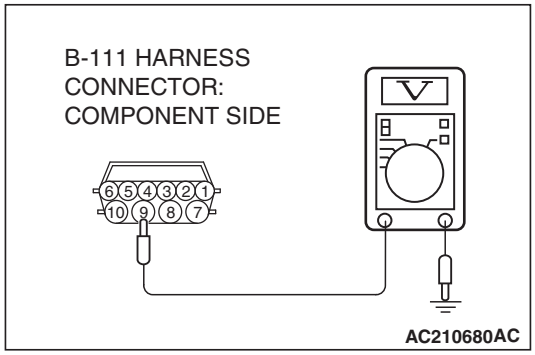

(3) Measure the voltage between harness connector B-111 terminal 9 and ground.
- The voltage should equal battery positive voltage.

(4) Turn the ignition switch to the "LOCK" (OFF) position.

Q: Is the measured voltage battery positive voltage?

YES : Go to Step 11.

NO : Go to Step 9.

STEP 9. Check A/T control relay connector B-15X in the engine component relay box and A/T control solenoid valve assembly connector B-111 for loose, corroded or damaged terminals, or terminals pushed back in the connector.

Q: Are the connectors and terminals in good condition?

YES : Go to Step 10.

NO : Repair or replace the damaged components. Refer to GROUP 00E, Harness Connector Inspection P.00E-2.

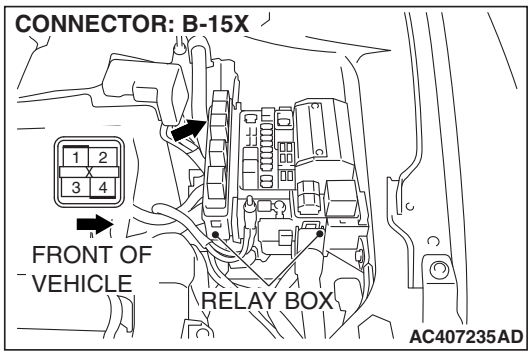

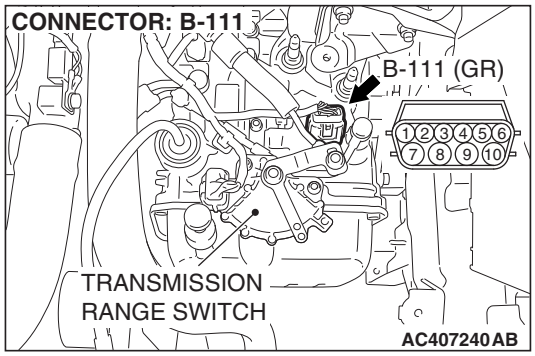

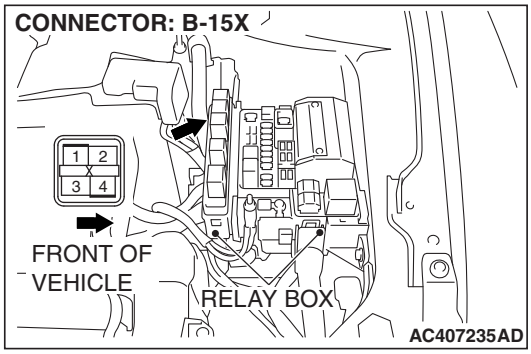

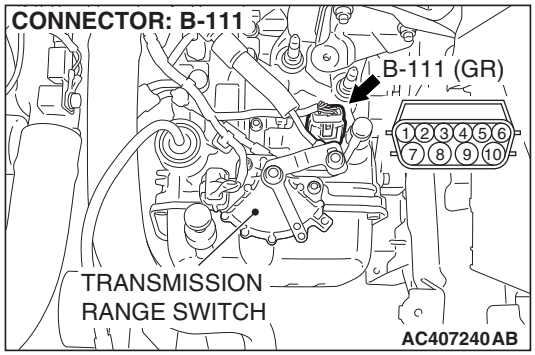

STEP 10. Check the harness for an open circuit or short circuit to ground between A/T control relay connector B-15X terminal 4 in the engine component relay box and A/T control solenoid valve assembly connector B-111 terminal 9.

Q: Is the harness wire in good condition?

YES : Go to Step 11.

NO : Repair or replace the harness wire.

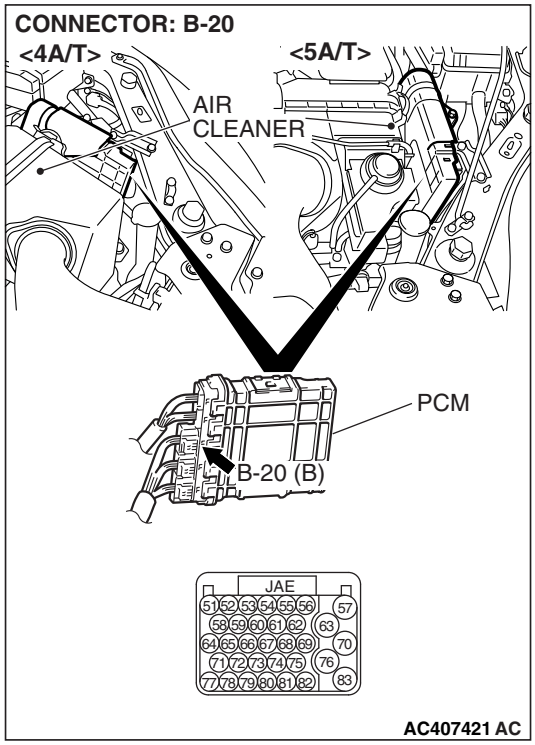

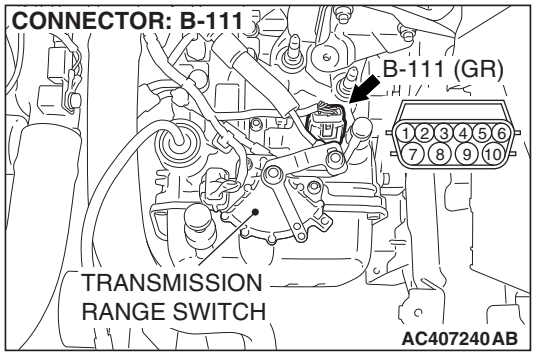

STEP 11. Check PCM connector B-20 and A/T control solenoid valve assembly connector B-111 for loose, corroded or damaged terminals, or terminals pushed back in the connector.

Q: Are the connectors and terminals in good condition?

YES : Go to Step 12.

NO : Repair or replace the damaged components. Refer to GROUP 00E, Harness Connector Inspection P.00E-2.

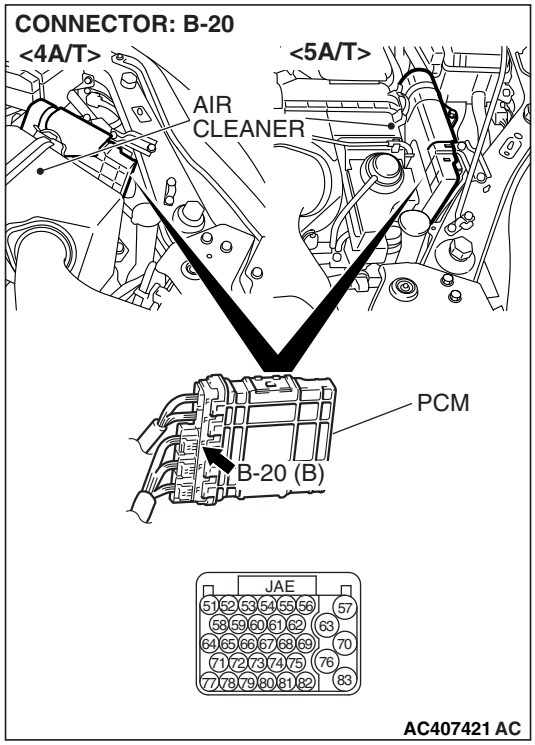

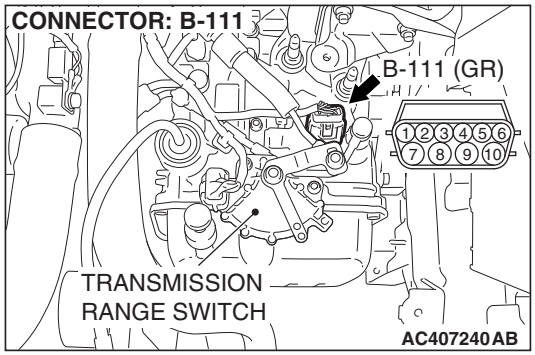

STEP 12. Check the harness for an open or short circuit to ground between PCM connector B-20 (terminals 65, 66 and 55) and A/T control solenoid valve assembly connector B-111 (terminals 3, 4 and 5).

Q: Are the harness wires in good condition?

YES : Go to Step 13.

NO : Repair or replace the harness wire.

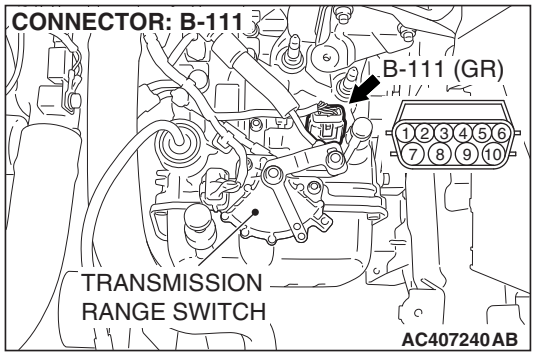

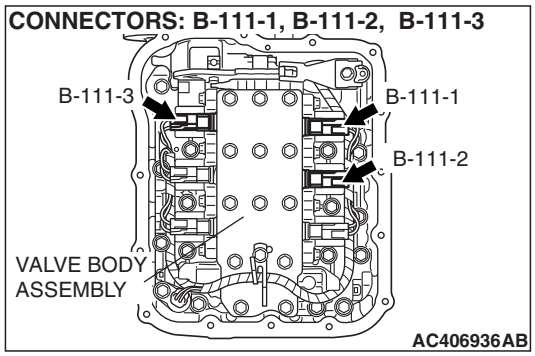

STEP 13. Check the harness for an open or short circuit to ground between A/T control solenoid valve assembly connector B-111 (terminals 3, 4, 5, and 9) and solenoid valve connectors B-111-1, B-111-2 and B-111-3.

Q: Is the harness wire in good condition?

YES : Replace the PCM. When the PCM is replaced, register the encrypted code. Refer to GROUP 54A, Encrypted Code Registration Criteria Table P.54A-19.

NO : Replace the harness wire.

DTC P1776 (P0768): Overdrive Solenoid Valve System

SOLENOID VALVE SYSTEM CIRCUIT

Refer to P.23A-187.

CIRCUIT OPERATION

Refer to P.23A-187.

DESCRIPTIONS OF MONITOR METHODS

- If solenoid terminal voltage is below specified value when shift control is not in progress, PCM judges that overdrive solenoid valve has a failure.

MONITOR EXECUTION

- Continuous

MONITOR EXECUTION CONDITIONS (OTHER MONITOR AND SENSOR)

Other Monitor (There is no temporary DTC stored in memory for the item monitored below)

- DTC P1779 (P0731): 1st gear incorrect ratio
- DTC P1780 (P0732): 2nd gear incorrect ratio
- DTC P1781 (P0733): 3rd gear incorrect ratio
- DTC P1782 (P0734): 4th gear incorrect ratio
- DTC P1783 (P0735): 5th gear incorrect ratio <5A/T>
- DTC P1784 (P0736): Reverse gear incorrect ratio
- DTC P1778 (P0743): Torque converter clutch solenoid malfunction
- DTC P1773 (P0753): Low-reverse solenoid malfunction
- DTC P1774 (P0758): Underdrive solenoid malfunction
- DTC P1775 (P0763): Second solenoid malfunction
- DTC P1777 (P0773): Reduction solenoid malfunction <5A/T>
- DTC P1788 (P1751): A/T control relay malfunction

Sensor (The sensor below is determined to be normal)

- Torque converter clutch solenoid
- Low-reverse solenoid
- Underdrive solenoid
- Second solenoid
- Reduction solenoid <5A/T>
- A/T control relay

LOGIC FLOW CHARTS (Monitor Sequence)

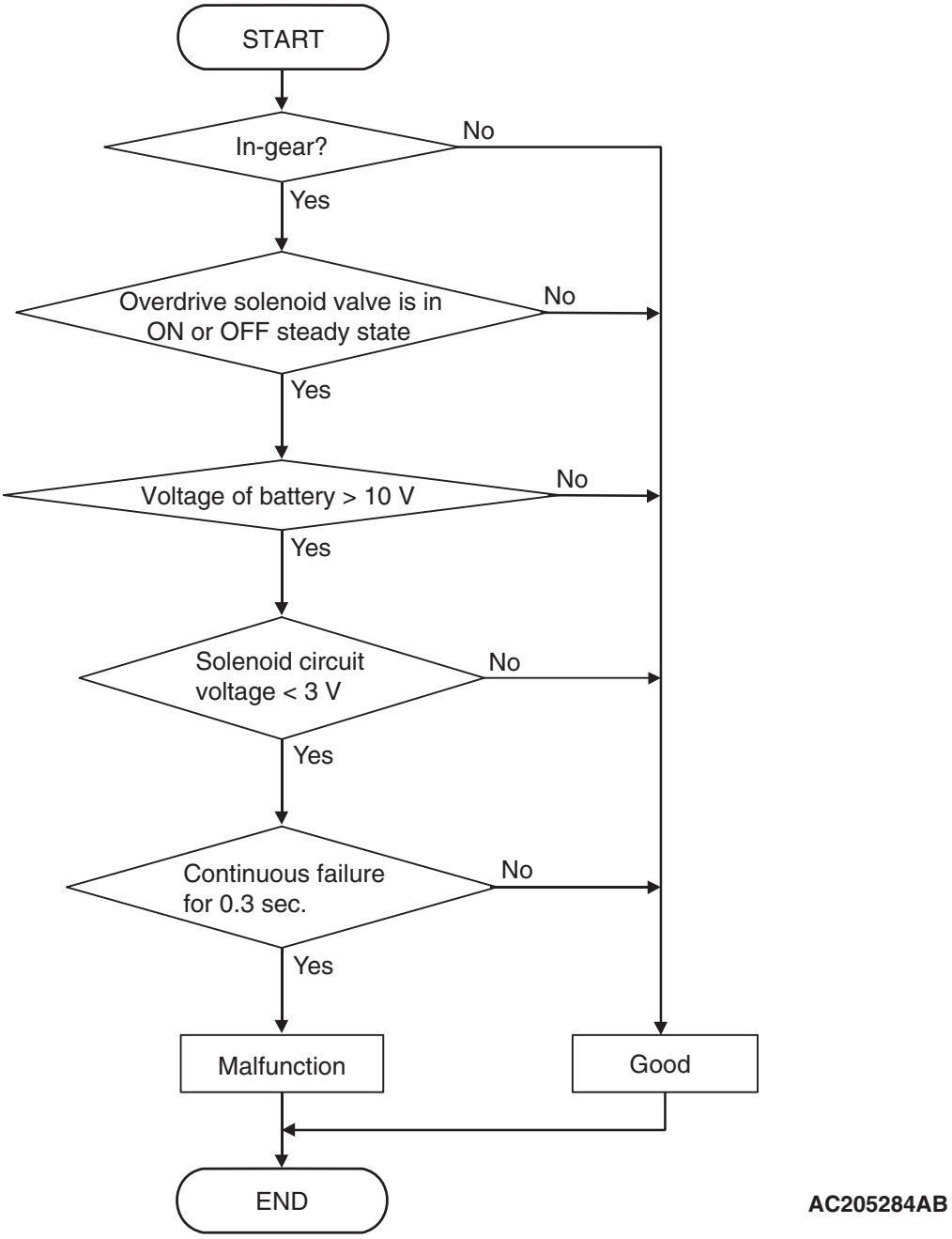

DTC SET CONDITIONS

Check Conditions

- Solenoid status: either solid ON or OFF.
- Shift status: in-gear.
- Voltage of battery: 10 volts or more.

Judgement Criteria

- Solenoid voltage: 3 volts or less. (0.3 second)
- If DTC P1776 (P0768) is set consecutively four times, the transaxle is locked into 3rd gear as a fail-safe measure, and the selector lever position indicator light (D, 1 through 4 or 5) flashes once per second.

OBD-II DRIVE CYCLE PATTERN

Start the engine, and keep the vehicle stopped in "P" range for 5 seconds.

TROUBLESHOOTING HINTS (THE MOST LIKELY CAUSES FOR THIS CODE TO BE SET ARE:)

- Malfunction of the overdrive solenoid valve
- Damaged harness or connector
- Malfunction of the PCM

TSB Revision

DIAGNOSIS

Required Special Tools:

- MB991958: Scan Tool (M.U.T.-III Sub Assembly)
  - MB991824: V.C.I.
  - MB991827: M.U.T.-III USB Cable
  - MB991910: M.U.T.-III Main Harness A

STEP 1. Using scan tool MB991958, check actuator test item 4: Overdrive Solenoid Valve.

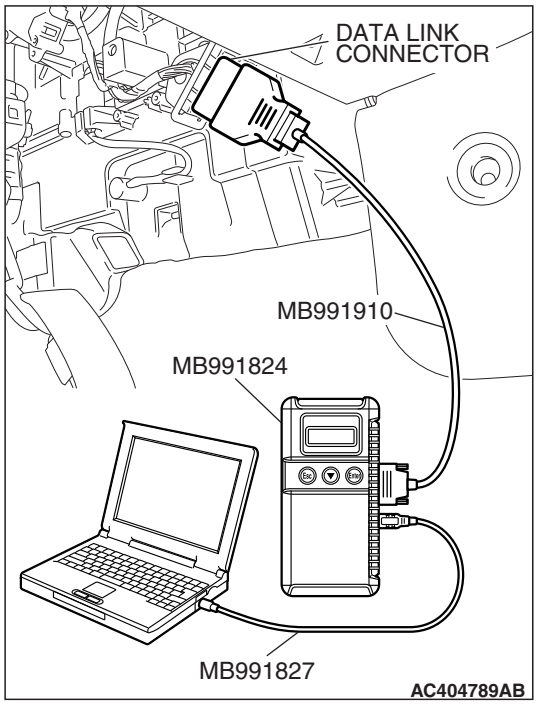

⚠ CAUTION

To prevent damage to scan tool MB991958, always turn the ignition switch to the "LOCK" (OFF) position before connecting or disconnecting scan tool MB991958.

(1) Connect scan tool MB991958 to the data link connector.
(2) Turn the ignition switch to the "ON" position.
(3) Set scan tool MB991958 to the actuator test mode.
- Item 4: Overdrive Solenoid Valve.
  - An audible clicking or buzzing should be heard when the overdrive solenoid valve is energized.

(4) Turn the ignition switch to the "LOCK" (OFF) position.

Q: Is the solenoid valve operating properly?

YES : It can be assumed that this malfunction is intermittent. Refer to GROUP 00, How to Use Troubleshooting/Inspection Service Points – How to Cope with Intermittent Malfunctions P.00-14.

NO : Go to Step 2.

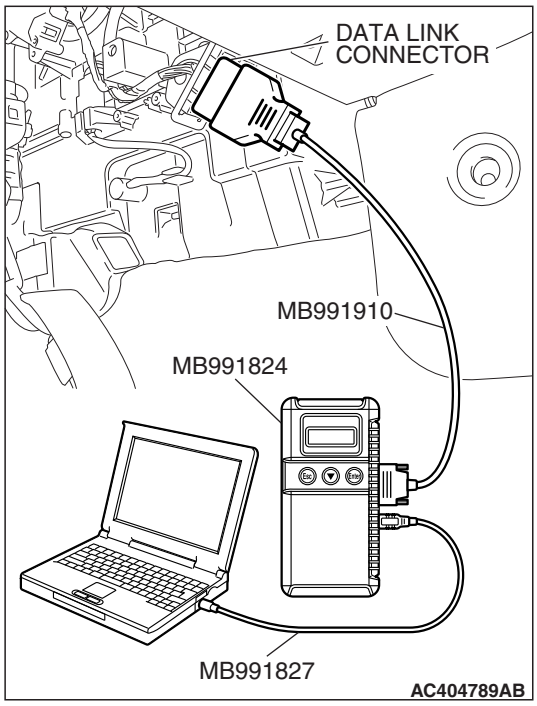

STEP 2. Using scan tool MB991958, read the A/T diagnostic trouble code.

(1) Connect scan tool MB991958 to the data link connector.
(2) Turn the ignition switch to the "ON" position.
(3) Check for A/T diagnostic trouble code.
(4) Turn the ignition switch to the "LOCK" (OFF) position.

Q: Is DTC P1788 (P1751) set? (DTC P1788 (P1751) may be set along with multiple DTCs).

YES : Refer to P.23A-286 DTC P1788 (P1751): A/T Control Relay System.
NO : Go to Step 3.

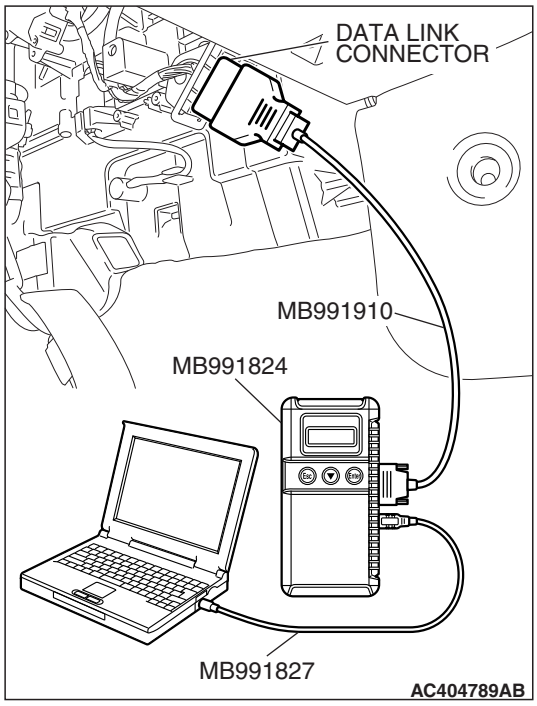

STEP 3. Using scan tool MB991958, read the A/T diagnostic trouble code.

(1) Connect scan tool MB991958 to the data link connector.
(2) Turn the ignition switch to the "ON" position.
(3) Check for A/T diagnostic trouble code.
(4) Turn the ignition switch to the "LOCK" (OFF) position.

Q: Are DTC P1774 (P0758) and DTC P1775 (P0763) set? (Multiple DTCs may be set).

YES : Go to Step 8.
NO : Go to Step 4.

STEP 4. Measure the Overdrive solenoid valve resistance at A/T control solenoid valve assembly connector B-111.

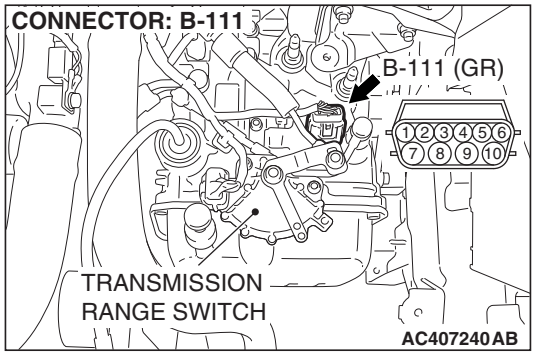

(1) Disconnect connector B-111 and measure at the solenoid valve side.

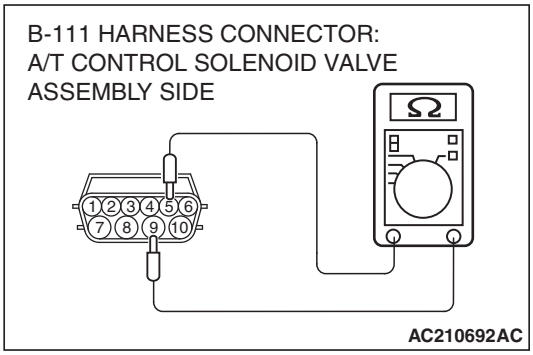

(2) Measure the resistance between solenoid valve assembly connector B-111 terminals 5 and 9.

Resistance value: 2.7–3.4 Ω [at 20°C (68°F)]

Q: Is the measured resistance 2.7–3.4 Ω [at 20°C (68°F)]?

YES : Go to Step 6.
NO : Go to Step 5.

STEP 5. Measure the solenoid valve resistance at the overdrive solenoid valve assembly inside the transaxle.

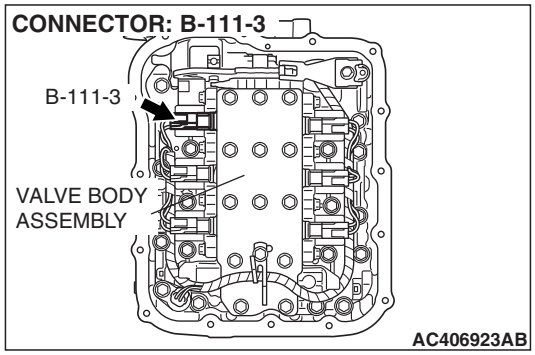

(1) Disconnect connector B-111-3 and measure at the solenoid valve side.

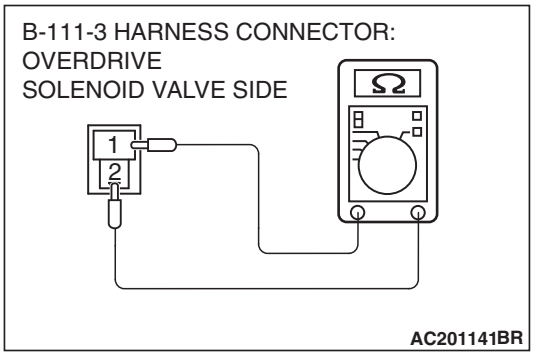

(2) Measure the resistance between Overdrive solenoid valve terminals 1 and 2.

Resistance value: 2.7–3.4 Ω [at 20°C (68°F)]

Q: Is the measured resistance 2.7–3.4 Ω [at 20°C (68°F)?

YES : Replace the harness wire between A/T control solenoid valve assembly connector B-111 and the solenoid valves.
NO : Replace the Overdrive solenoid valve. Refer to GROUP 23B, P.23B-65 Valve Body <4A/T> or Refer to GROUP 23C, P.23C-73 Valve Body <5A/T>.

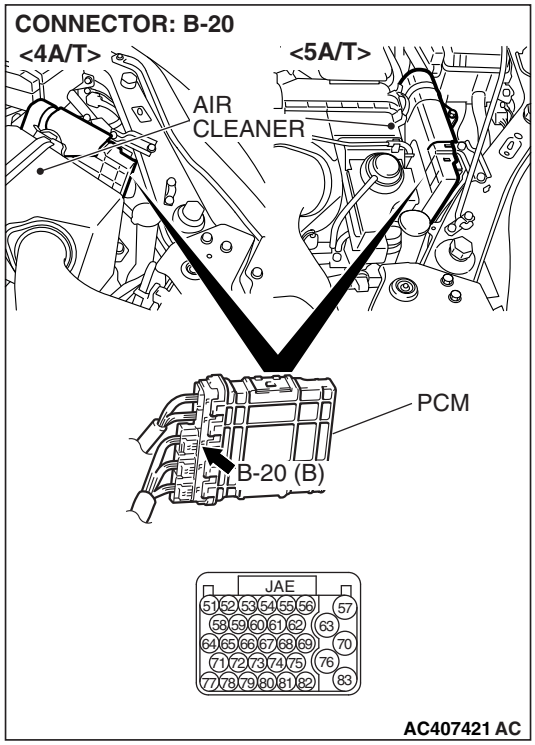

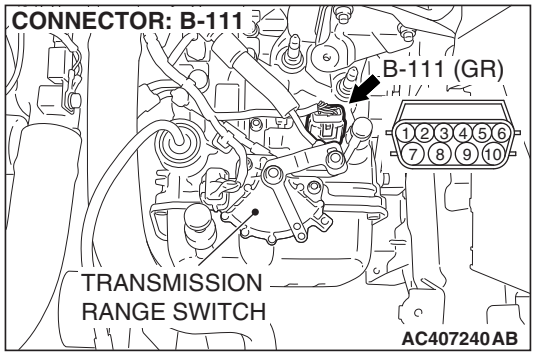

STEP 6. Check PCM connector B-20 and A/T control solenoid valve assembly connector B-111 for loose, corroded or damaged terminals, or terminals pushed back in the connector.

Q: Are the connectors and terminals in good condition?

YES : Go to Step 7.

NO : Repair or replace the damaged components. Refer to GROUP 00E, Harness Connector Inspection P.00E-2.

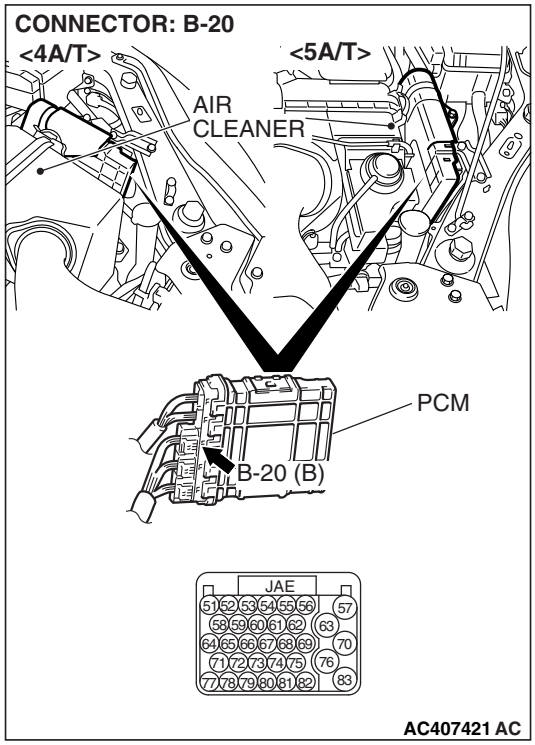

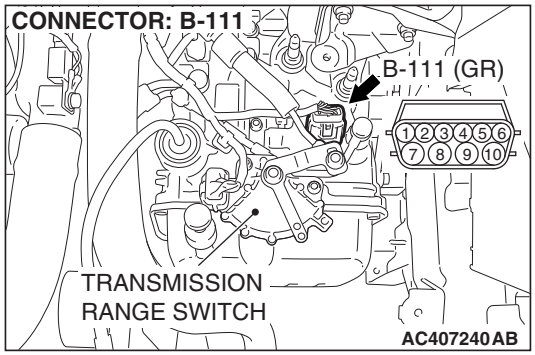

STEP 7. Check the harness for an open or short circuit to ground between PCM connector B-20 terminal 55 and A/T control solenoid valve assembly connector B-111 terminal 5.

Q: Is the harness wire in good condition?

YES : Replace the PCM. When the PCM is replaced, register the encrypted code. Refer to GROUP 54A, Encrypted Code Registration Criteria Table P.54A-19.

NO : Repair or replace the harness wire.

STEP 8. Measure the supply voltage at A/T control solenoid valve assembly connector B-111.

(1) Disconnect solenoid valve assembly harness connector B-111.

(2) Turn the ignition switch to the "ON" position.

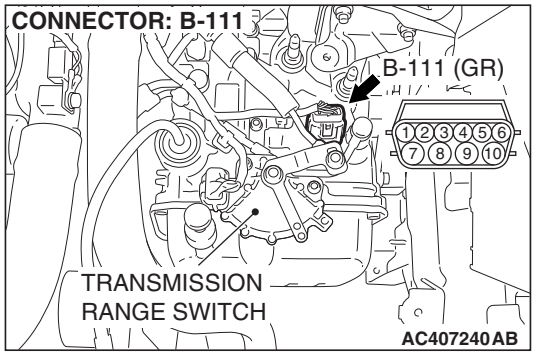

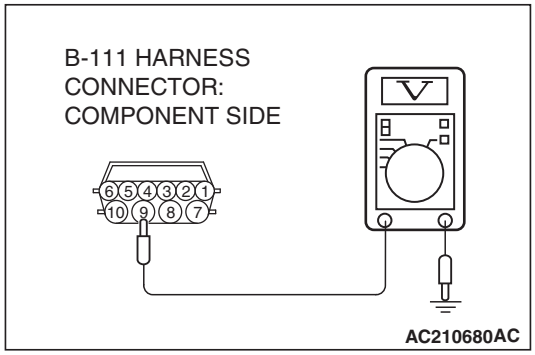

(3) Measure the voltage between harness connector B-111 terminal 9 and ground.
- The voltage should equal battery positive voltage.

(4) Turn the ignition switch to the "LOCK" (OFF) position.

Q: Is the measured voltage battery positive voltage?

YES : Go to Step 11.

NO : Go to Step 9.

STEP 9. Check A/T control relay connector B-15X in the engine component relay box and A/T control solenoid valve assembly connector B-111 for loose, corroded or damaged terminals, or terminals pushed back in the connector.

Q: Are the connectors and terminals in good condition?

YES : Go to Step 10.

NO : Repair or replace the damaged components. Refer to GROUP 00E, Harness Connector Inspection P.00E-2.

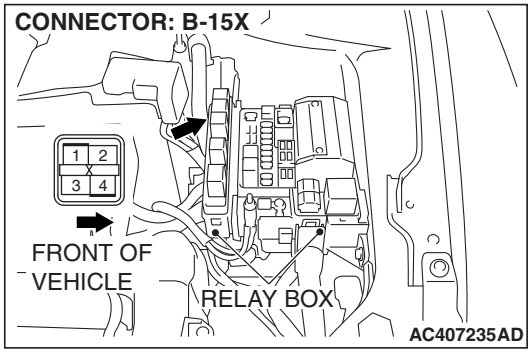

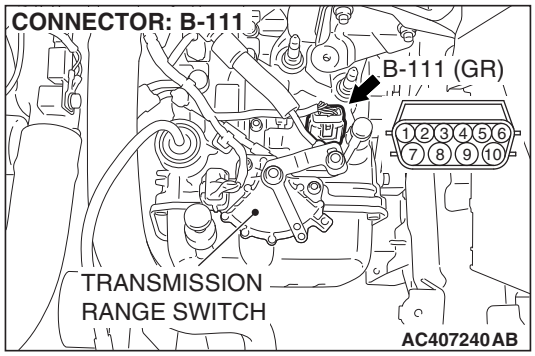

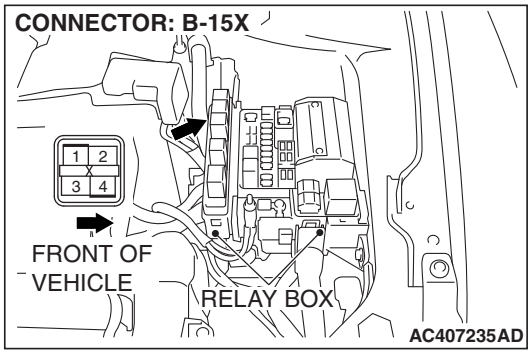

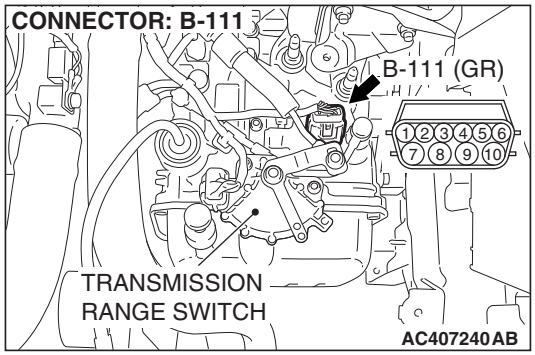

STEP 10. Check the harness for an open circuit or short circuit to ground between A/T control relay connector B-15X terminal 4 in the engine component relay box and A/T control solenoid valve assembly connector B-111 terminal 9.

Q: Is the harness wire in good condition?

YES : Go to Step 11.

NO : Repair or replace the harness wire.

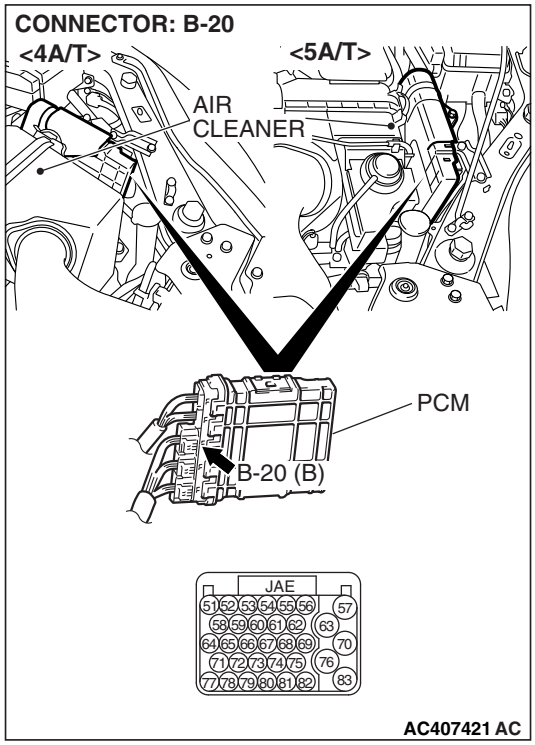

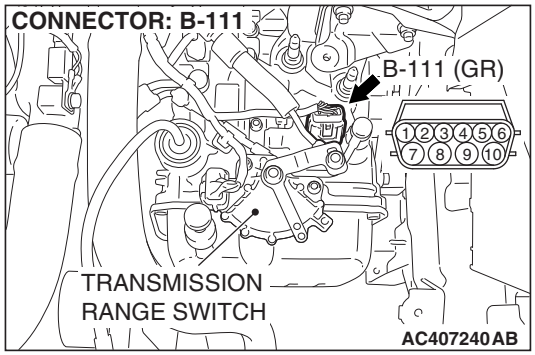

STEP 11. Check PCM connector B-20 and A/T control solenoid valve assembly connector B-111 for loose, corroded or damaged terminals, or terminals pushed back in the connector.

Q: Are the connectors and terminals in good condition?

YES : Go to Step 12.

NO : Repair or replace the damaged components. Refer to GROUP 00E, Harness Connector Inspection P.00E-2.

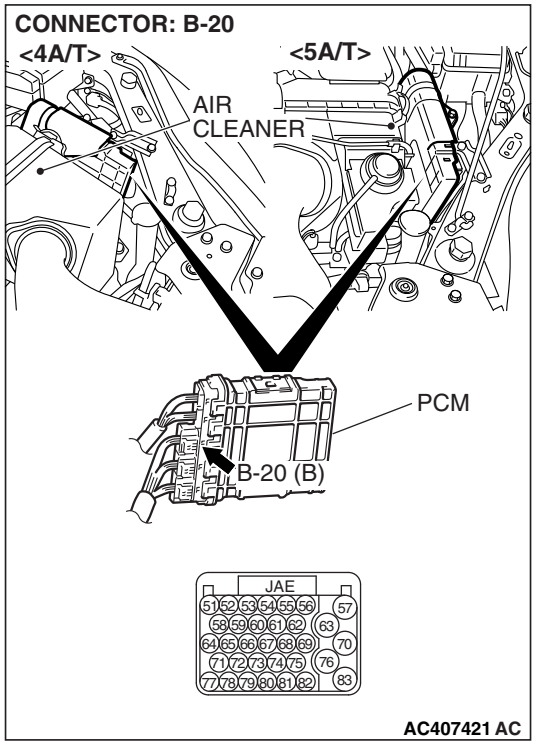

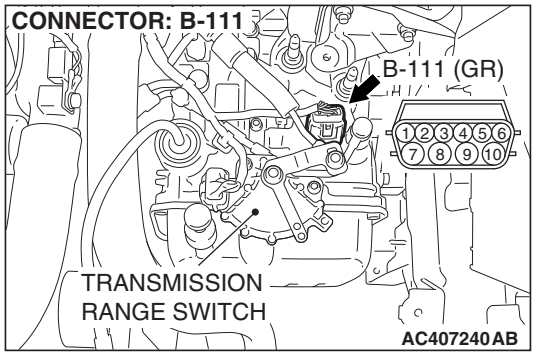

STEP 12. Check the harness for an open or short circuit to ground between PCM connector B-20 (terminals 65, 66 and 55) and A/T control solenoid valve assembly connector B-111 (terminals 3, 4 and 5).

Q: Are the harness wires in good condition?

YES : Go to Step 13.

NO : Repair or replace the harness wire.

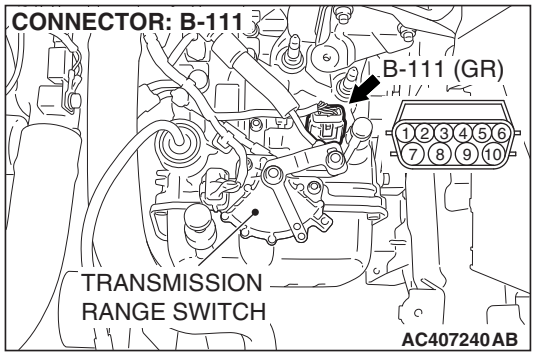

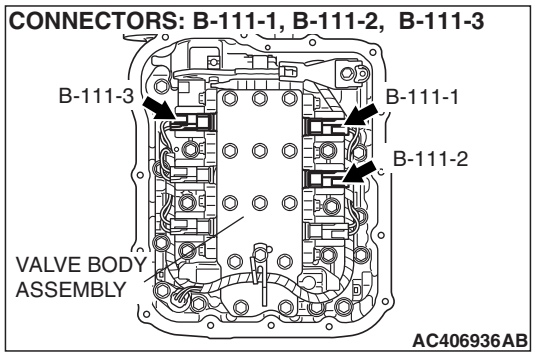

STEP 13. Check the harness for an open or short circuit to ground between A/T control solenoid valve assembly connector B-111 (terminals 3, 4, 5, and 9) and solenoid valve connectors B-111-1, B-111-2 and B-111-3.

Q: Is the harness wire in good condition?

YES : Replace the PCM. When the PCM is replaced, register the encrypted code. Refer to GROUP 54A, Encrypted Code Registration Criteria Table P.54A-19.

NO : Replace the harness wire.

DTC P1777 (P0773): Reduction solenoid valve system <5A/T>

SOLENOID VALVE SYSTEM CIRCUIT

Refer to P.23A-187.

CIRCUIT OPERATION

Refer to P.23A-187.

DESCRIPTIONS OF MONITOR METHODS

- If solenoid terminal voltage is below specified value when shift control is not in progress, PCM judges that reduction solenoid valve has a failure.

MONITOR EXECUTION

- Continuous

MONITOR EXECUTION CONDITIONS (OTHER MONITOR AND SENSOR)

Other Monitor (There is no temporary DTC stored in memory for the item monitored below)

- DTC P1779 (P0731): 1st gear incorrect ratio
- DTC P1780 (P0732): 2nd gear incorrect ratio
- DTC P1781 (P0733): 3rd gear incorrect ratio
- DTC P1782 (P0734): 4th gear incorrect ratio
- DTC P1783 (P0735): 5th gear incorrect ratio
- DTC P1784 (P0736): Reverse gear incorrect ratio
- DTC P1778 (P0743): Torque converter clutch solenoid malfunction
- DTC P1773 (P0753): Low-reverse solenoid malfunction
- DTC P1774 (P0758): Underdrive solenoid malfunction
- DTC P1775 (P0763): Second solenoid malfunction
- DTC P1776 (P0768): Overdrive solenoid malfunction
- DTC P1788 (P1751): A/T control relay malfunction

Sensor (The sensor below is determined to be normal)

- Torque converter clutch solenoid
- Low-reverse solenoid
- Underdrive solenoid
- Second solenoid
- Overdrive solenoid
- A/T control relay

LOGIC FLOW CHARTS (Monitor Sequence)

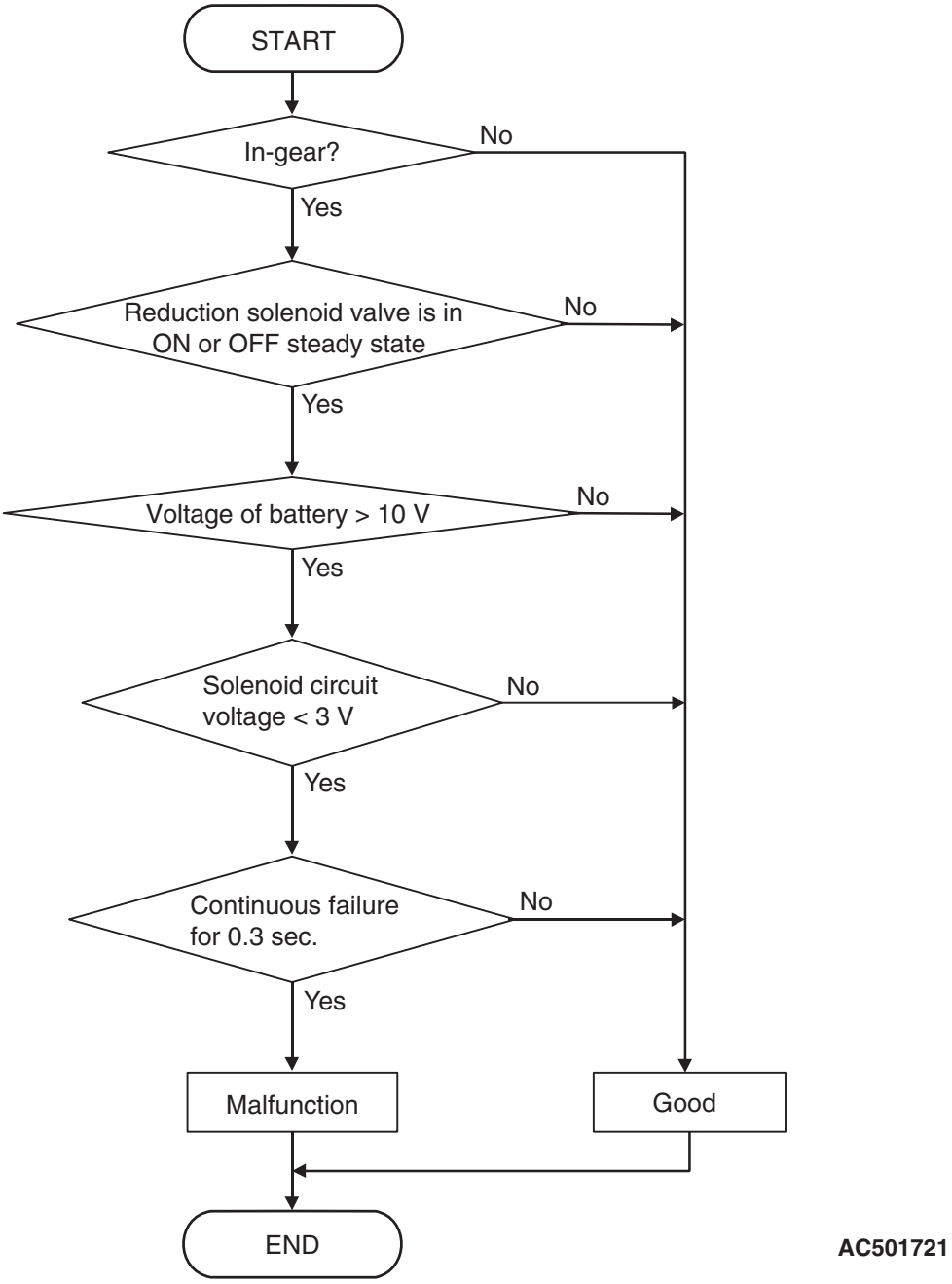

DTC SET CONDITIONS

Check Conditions

- Solenoid status: either solid ON or OFF.
- Shift status: in-gear.
- Voltage of battery: 10 volts or more.

Judgement Criteria

- Solenoid voltage: 3 volts or less. (0.3 second)
- If DTC P1777 (P0773) is set consecutively four times, the transaxle is locked into 3rd gear as a fail-safe measure, and the selector lever position indicator light (D, 1 through 4 or 5) flashes once per second.

OBD-II DRIVE CYCLE PATTERN

Start the engine, and keep the vehicle stopped in "P" range for 5 seconds.

TROUBLESHOOTING HINTS (THE MOST LIKELY CAUSES FOR THIS CODE TO BE SET ARE:)

- Malfunction of the reduction solenoid valve
- Damaged harness or connector
- Malfunction of the PCM

TSB Revision

DIAGNOSIS

Required Special Tools:

- MB991958: Scan Tool (M.U.T.-III Sub Assembly)
  - MB991824: V.C.I.
  - MB991827: M.U.T.-III USB Cable
  - MB991910: M.U.T.-III Main Harness A

STEP 1. Using scan tool MB991958, check actuator test item 5: Reduction Solenoid Valve.

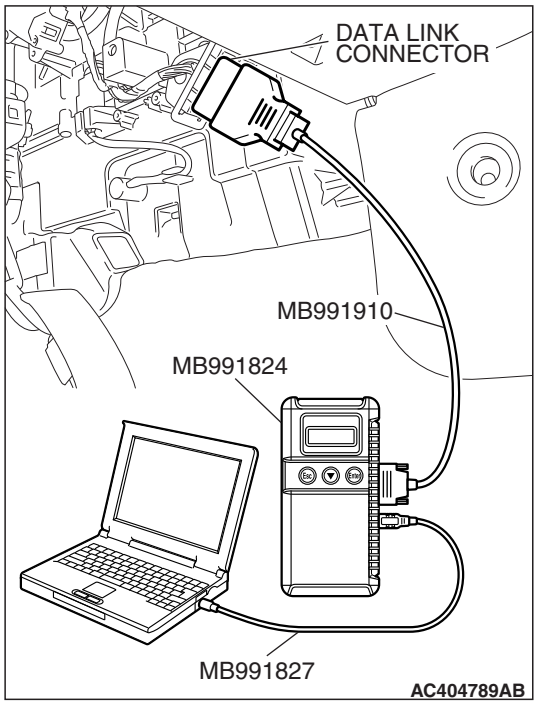

⚠ CAUTION

To prevent damage to scan tool MB991958, always turn the ignition switch to the "LOCK" (OFF) position before connecting or disconnecting scan tool MB991958.

(1) Connect scan tool MB991958 to the data link connector.
(2) Turn the ignition switch to the "ON" position.
(3) Set scan tool MB991958 to the actuator test mode.
- Item 5: Reduction Solenoid Valve.
  - An audible clicking or buzzing should be heard when the reduction solenoid valve is energized.

(4) Turn the ignition switch to the "LOCK" (OFF) position.

Q: Is the solenoid valve operating properly?

YES : It can be assumed that this malfunction is intermittent. Refer to GROUP 00, How to Use Troubleshooting/Inspection Service Points – How to Cope with Intermittent Malfunctions P.00-14.

NO : Go to Step 2.

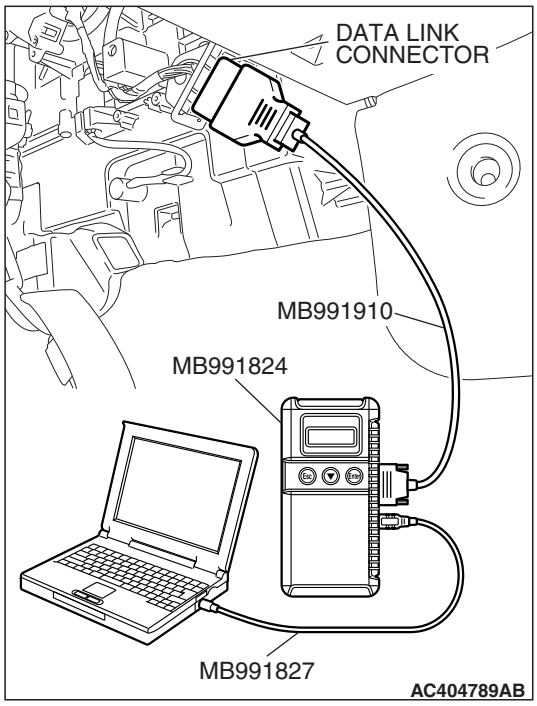

STEP 2. Using scan tool MB991958, read the A/T diagnostic trouble code.

(1) Connect scan tool MB991958 to the data link connector.
(2) Turn the ignition switch to the "ON" position.
(3) Check for A/T diagnostic trouble code.
(4) Turn the ignition switch to the "LOCK" (OFF) position.

Q: Is DTC P1788 (P1751) set? (DTC P1788 (P1751) may be set along with multiple DTCs).

YES : Refer to P.23A-286 DTC P1788 (P1751): A/T Control Relay System.
NO : Go to Step 3.

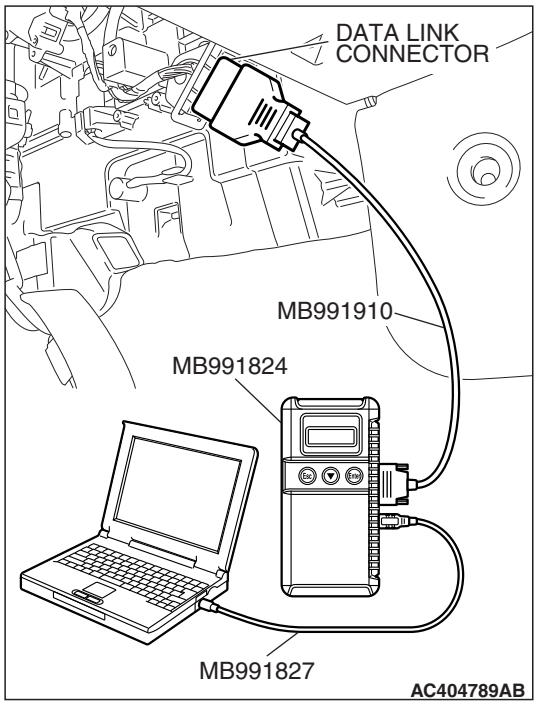

STEP 3. Using scan tool MB991958, read the A/T diagnostic trouble code.

(1) Connect scan tool MB991958 to the data link connector.
(2) Turn the ignition switch to the "ON" position.
(3) Check for A/T diagnostic trouble code.
(4) Turn the ignition switch to the "LOCK" (OFF) position.

Q: Are DTC P1778 (P0743) and DTC P1773 (P0753) set? (Multiple DTCs may be set).

YES : Go to Step 8.
NO : Go to Step 4.

STEP 4. Measure the Reduction solenoid valve resistance at A/T control solenoid valve assembly connector B-111.

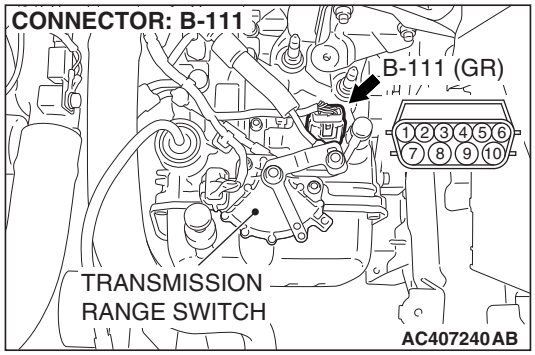

(1) Disconnect connector B-111 and measure at the solenoid valve side.

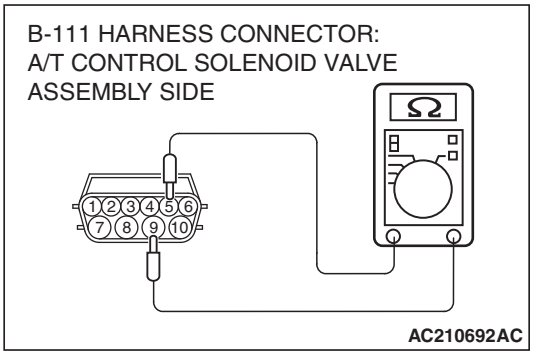

(2) Measure the resistance between solenoid valve assembly connector B-111 terminals 8 and 10.

Resistance value: 2.7–3.4 Ω [at 20°C (68°F)]

Q: Is the measured resistance 2.7–3.4 Ω [at 20°C (68°F)]?

YES : Go to Step 6.
NO : Go to Step 5.

STEP 5. Measure the solenoid valve resistance at the reduction solenoid valve assembly inside the transaxle.

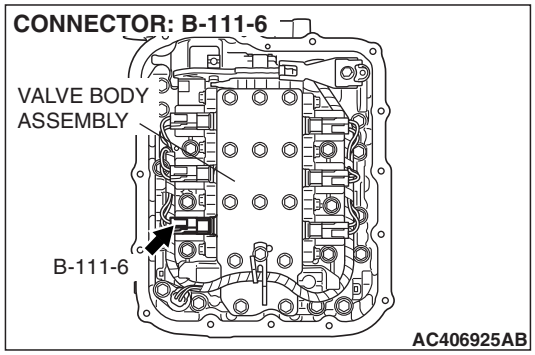

(1) Disconnect connector B-111-6 and measure at the solenoid valve side.

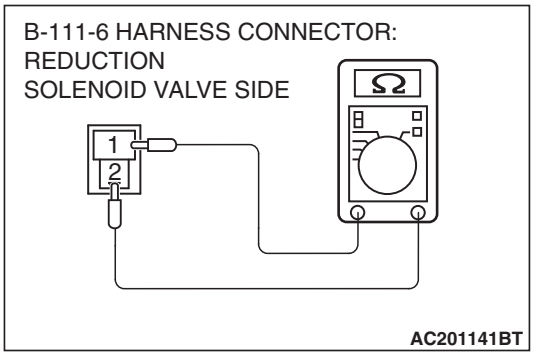

(2) Measure the resistance between Reduction solenoid valve terminals 1 and 2.

Resistance value: 2.7–3.4 Ω [at 20°C (68°F)]

Q: Is the measured resistance 2.7–3.4 Ω [at 20°C (68°F)?

YES : Replace the harness wire between A/T control solenoid valve assembly connector B-111 and the solenoid valves.
NO : Replace the Reduction solenoid valve. Refer to GROUP 23C, P.23C-73 Valve Body.

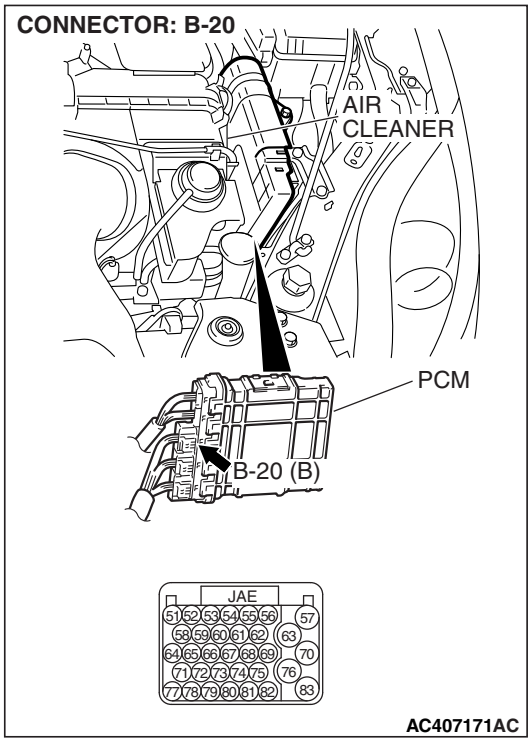

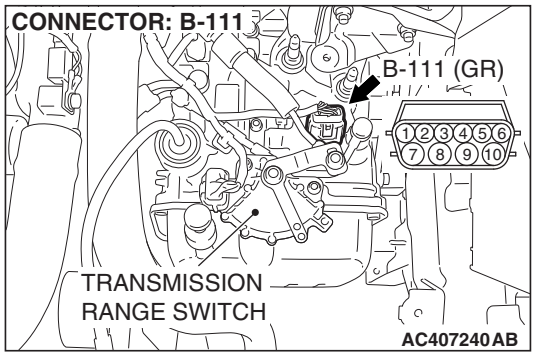

STEP 6. Check PCM connector B-20 and A/T control solenoid valve assembly connector B-111 for loose, corroded or damaged terminals, or terminals pushed back in the connector.

Q: Are the connectors and terminals in good condition?

YES : Go to Step 7.

NO : Repair or replace the damaged components. Refer to GROUP 00E, Harness Connector Inspection P.00E-2.

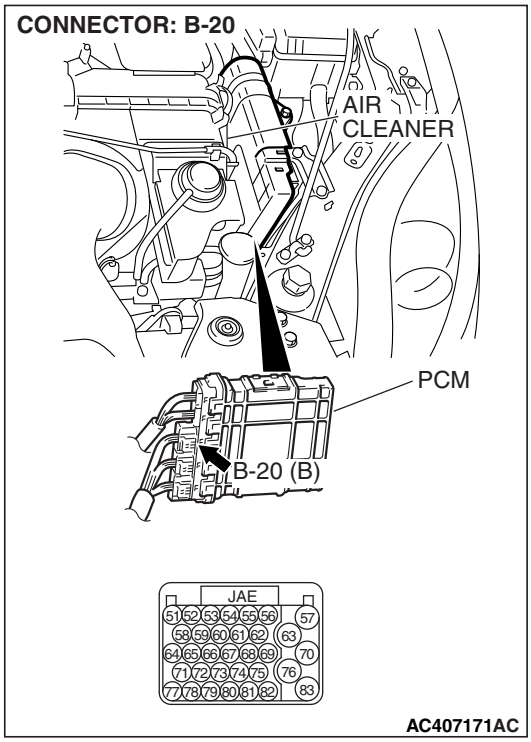

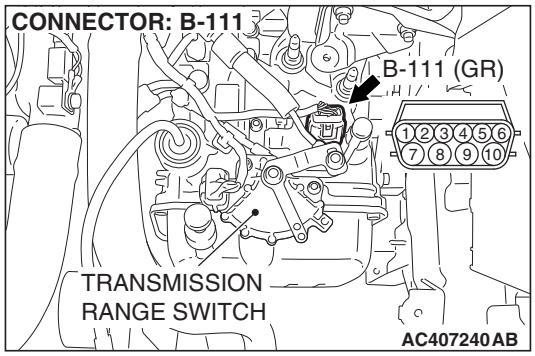

STEP 7. Check the harness for an open or short circuit to ground between PCM connector B-20 terminal 55 and A/T control solenoid valve assembly connector B-111 terminal 5.

Q: Is the harness wire in good condition?

YES : Replace the PCM. When the PCM is replaced, register the encrypted code. Refer to GROUP 54A, Encrypted Code Registration Criteria Table P.54A-19.

NO : Repair or replace the harness wire.

STEP 8. Measure the supply voltage at A/T control solenoid valve assembly connector B-111.

(1) Disconnect solenoid valve assembly harness connector B-111.

(2) Turn the ignition switch to the "ON" position.

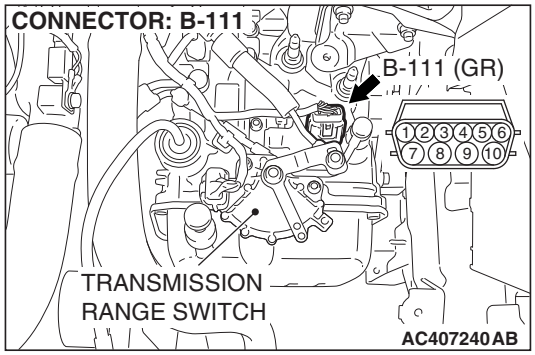

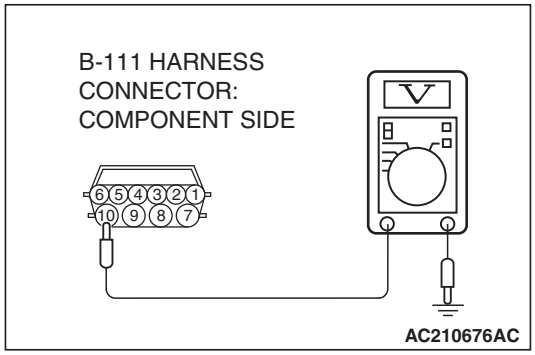

(3) Measure the voltage between harness connector B-111 terminal 10 and ground.
- The voltage should equal battery positive voltage.

(4) Turn the ignition switch to the "LOCK" (OFF) position.

Q: Is the measured voltage battery positive voltage?

YES : Go to Step 11.

NO : Go to Step 9.

STEP 9. Check A/T control relay connector B-15X in the engine component relay box and A/T control solenoid valve assembly connector B-111 for loose, corroded or damaged terminals, or terminals pushed back in the connector.

Q: Are the connectors and terminals in good condition?

YES : Go to Step 10.

NO : Repair or replace the damaged components. Refer to GROUP 00E, Harness Connector Inspection P.00E-2.

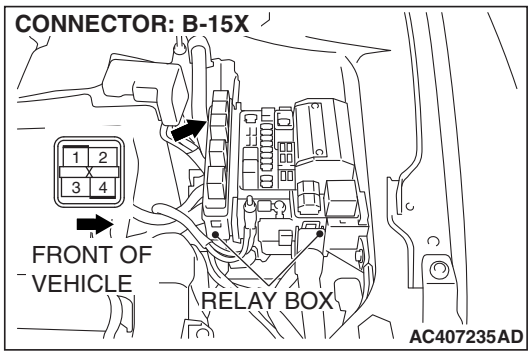

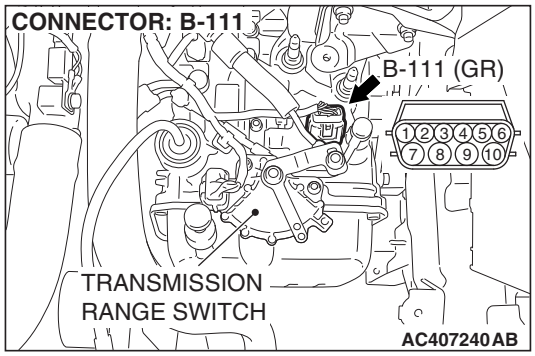

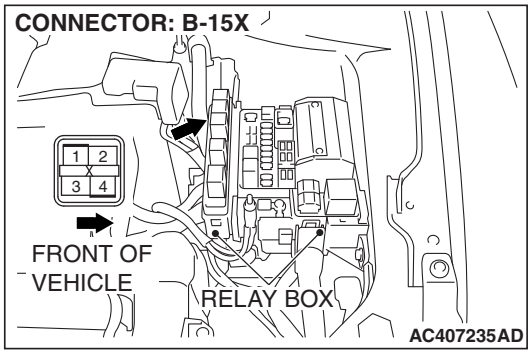

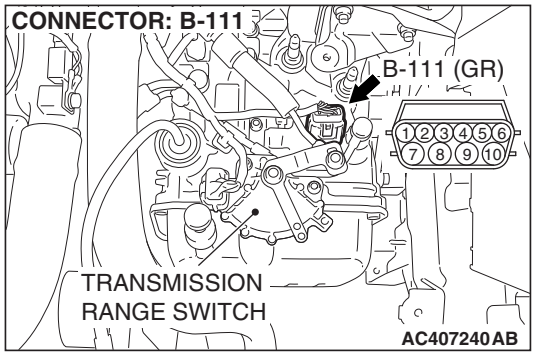

STEP 10. Check the harness for an open circuit or short circuit to ground between A/T control relay connector B-15X terminal 4 in the engine component relay box and A/T control solenoid valve assembly connector B-111 terminal 10.

Q: Is the harness wire in good condition?

YES : Go to Step 11.

NO : Repair or replace the harness wire.

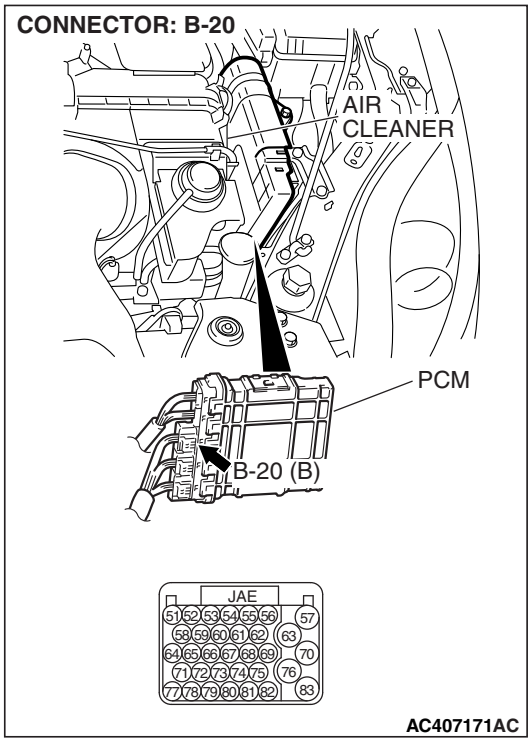

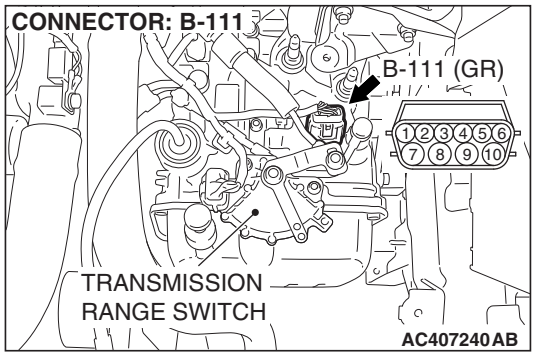

STEP 11. Check PCM connector B-20 and A/T control solenoid valve assembly connector B-111 for loose, corroded or damaged terminals, or terminals pushed back in the connector.

Q: Are the connectors and terminals in good condition?

YES : Go to Step 12.

NO : Repair or replace the damaged components. Refer to GROUP 00E, Harness Connector Inspection P.00E-2.

STEP 12. Check the harness for an open or short circuit to ground between PCM connector B-20 (terminals 54, 56 and 53) and A/T control solenoid valve assembly connector B-111 (terminals 7, 6 and 8).

Q: Are the harness wires in good condition?

YES : Go to Step 13.

NO : Repair or replace the harness wire.

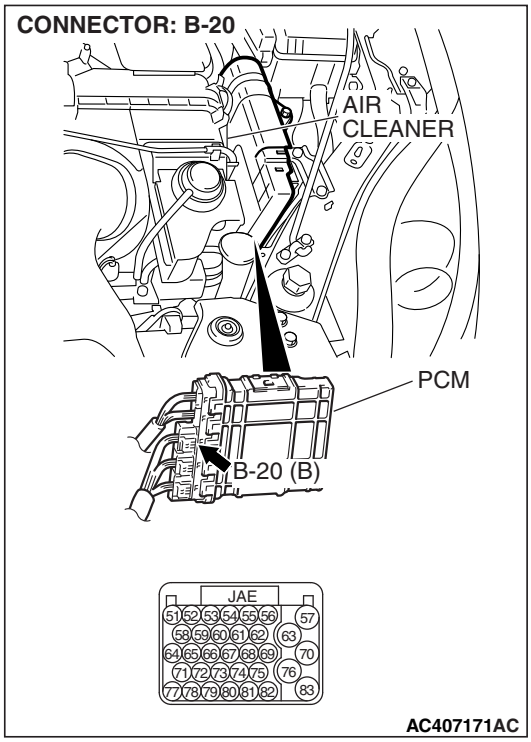

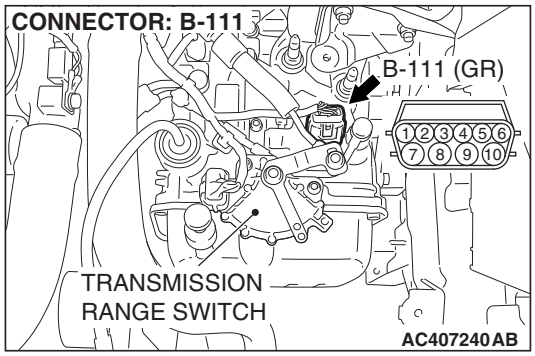

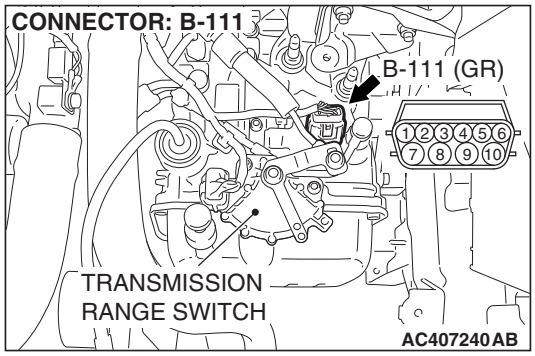

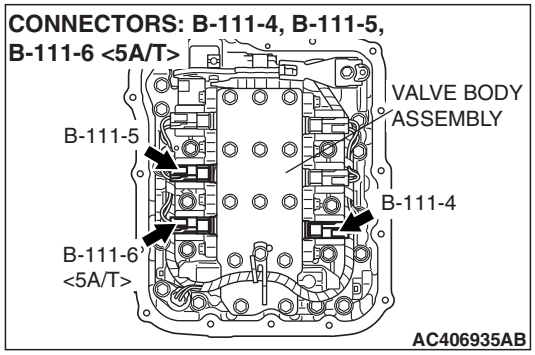

STEP 13. Check the harness for an open or short circuit to ground between A/T control solenoid valve assembly connector B-111 (terminals 7, 6, 8, and 10) and solenoid valve connectors B-111-4, B-111-5 and B-111-6.

Q: Is the harness wire in good condition?

YES : Replace the PCM. When the PCM is replaced, register the encrypted code. Refer to GROUP 54A, Encrypted Code Registration Criteria Table P.54A-19.

NO : Replace the harness wire.

DTC P1778 (P0743): Torque Converter Clutch Solenoid Valve System

SOLENOID VALVE SYSTEM CIRCUIT

Refer to P.23A-187.

CIRCUIT OPERATION

Refer to P.23A-187.

DESCRIPTIONS OF MONITOR METHODS

- If lock-up is not engaged, and solenoid terminal voltage is below specified value, PCM judges that torque converter clutch solenoid valve has a failure.

MONITOR EXECUTION

- Continuous

MONITOR EXECUTION CONDITIONS (OTHER MONITOR AND SENSOR)

Other Monitor (There is no temporary DTC stored in memory for the item monitored below)

- DTC P1779 (P0731): 1st gear incorrect ratio
- DTC P1780 (P0732): 2nd gear incorrect ratio
- DTC P1781 (P0733): 3rd gear incorrect ratio
- DTC P1782 (P0734): 4th gear incorrect ratio
- DTC P1783 (P0735): 5th gear incorrect ratio <5A/T>
- DTC P1784 (P0736): Reverse gear incorrect ratio
- DTC P1773 (P0753): Low-reverse solenoid malfunction
- DTC P1774 (P0758): Underdrive solenoid malfunction
- DTC P1775 (P0763): Second solenoid malfunction
- DTC P1776 (P0768): Overdrive solenoid malfunction
- DTC P1777 (P0773): Reduction solenoid malfunction <5A/T>
- DTC P1788 (P1751): A/T control relay malfunction

Sensor (The sensor below is determined to be normal)

- Low-reverse solenoid
- Underdrive solenoid
- Second solenoid
- Overdrive solenoid
- Reduction solenoid <5A/T>
- A/T control relay

LOGIC FLOW CHARTS (Monitor Sequence)

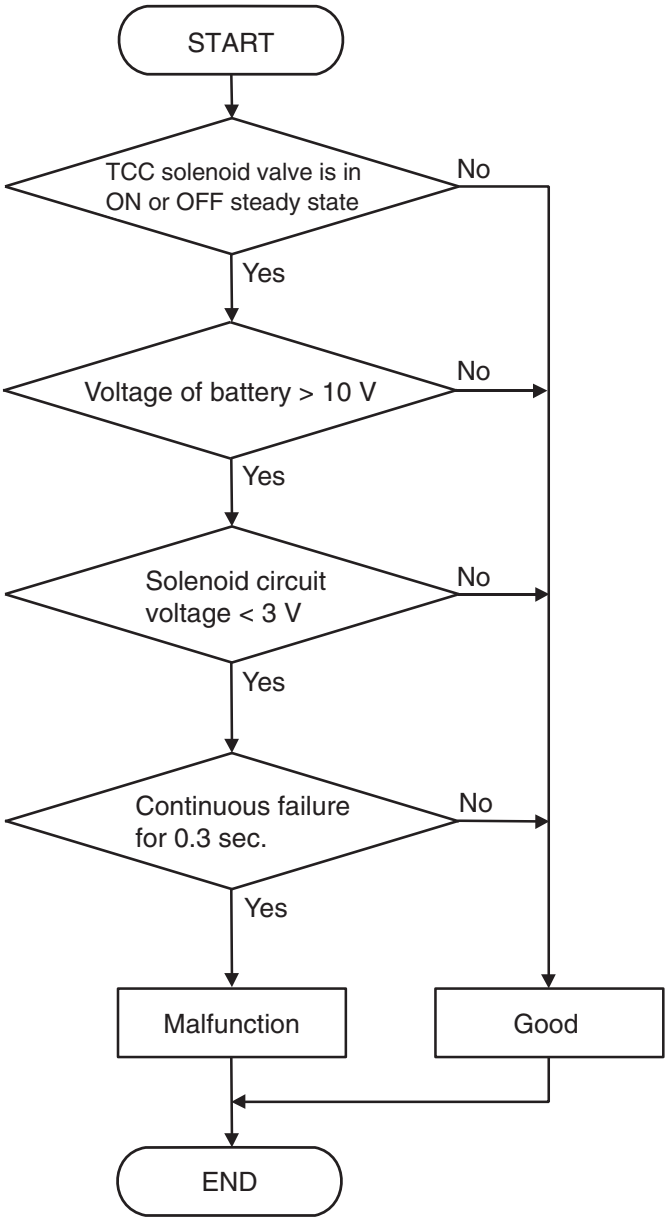

AC205240AC

DTC SET CONDITIONS

Check Conditions

- Solenoid status: either solid ON or OFF.
- Voltage of battery: 10 volts or more.

Judgement Criteria

- Solenoid voltage: 3 volts or less. (0.3 second)
- If DTC P1778 (P0743) is set consecutively four times, the transaxle is locked into 3rd gear as a fail-safe measure, and the selector lever position indicator light (D, 1 through 4 or 5) flashes once per second.

OBD-II DRIVE CYCLE PATTERN

Start the engine, and keep the vehicle stopped in "P" range for 5 seconds.

TROUBLESHOOTING HINTS (THE MOST LIKELY CAUSES FOR THIS CODE TO BE SET ARE:)

- Malfunction of the torque converter clutch solenoid valve
- Damaged harness or connector
- Malfunction of the PCM

DIAGNOSIS

Required Special Tools:

- MB991958: Scan Tool (M.U.T.-III Sub Assembly)
  - MB991824: V.C.I.
  - MB991827: M.U.T.-III USB Cable
  - MB991910: M.U.T.-III Main Harness A

STEP 1. Using scan tool MB991958, check actuator test item 6: Torque Converter Clutch Solenoid Valve.

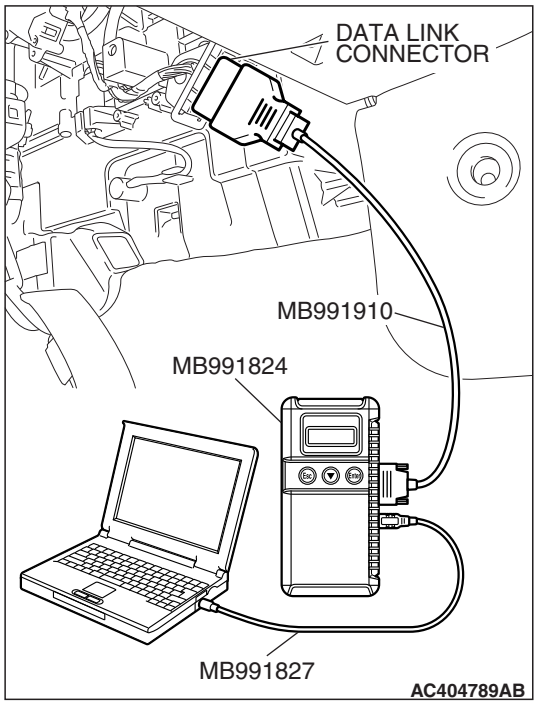

⚠ CAUTION

To prevent damage to scan tool MB991958, always turn the ignition switch to the "LOCK" (OFF) position before connecting or disconnecting scan tool MB991958.

(1) Connect scan tool MB991958 to the data link connector.
(2) Turn the ignition switch to the "ON" position.
(3) Set scan tool MB991958 to the actuator test mode.
- Item 6: Torque Converter Clutch Solenoid Valve.
  - An audible clicking or buzzing should be heard when the torque converter clutch solenoid valve is energized.

(4) Turn the ignition switch to the "LOCK" (OFF) position.

Q: Is the solenoid valve operating properly?

YES : It can be assumed that this malfunction is intermittent. Refer to GROUP 00, How to Use Troubleshooting/Inspection Service Points – How to Cope with Intermittent Malfunctions P.00-14.

NO : Go to Step 2.

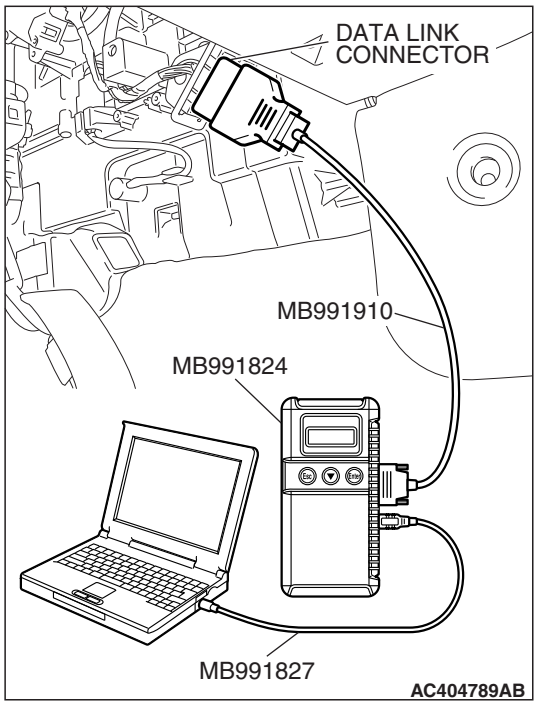

STEP 2. Using scan tool MB991958, read the A/T diagnostic trouble code.

(1) Connect scan tool MB991958 to the data link connector.
(2) Turn the ignition switch to the "ON" position.
(3) Check for A/T diagnostic trouble code.
(4) Turn the ignition switch to the "LOCK" (OFF) position.

Q: Is DTC P1788 (P1751) set? (DTC P1788 (P1751) may be set along with multiple DTCs).

YES : Refer to P.23A-286 DTC P1788 (P1751): A/T Control Relay System.
NO : Go to Step 3.

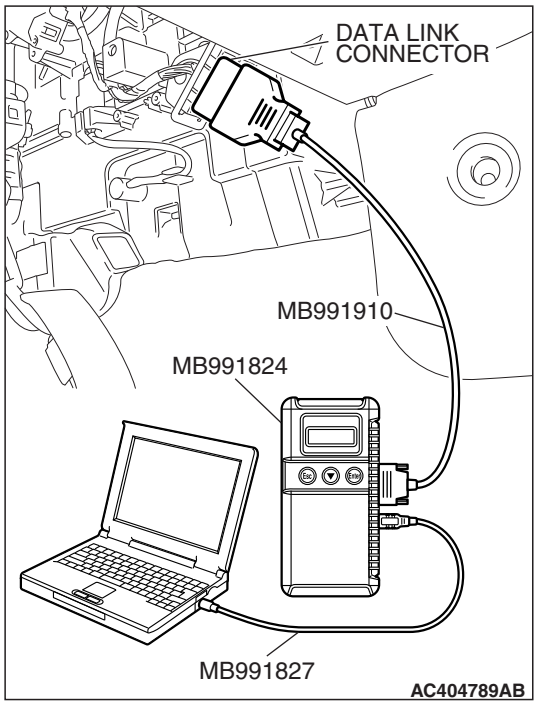

STEP 3. Using scan tool MB991958, read the A/T diagnostic trouble code.

(1) Connect scan tool MB991958 to the data link connector.
(2) Turn the ignition switch to the "ON" position.
(3) Check for A/T diagnostic trouble code.
(4) Turn the ignition switch to the "LOCK" (OFF) position.

Q: Is DTC 31 set?

YES : Go to Step 8.
NO : Go to Step 4.

STEP 4. Measure the torque converter clutch solenoid valve resistance at A/T control solenoid valve assembly connector B-111.

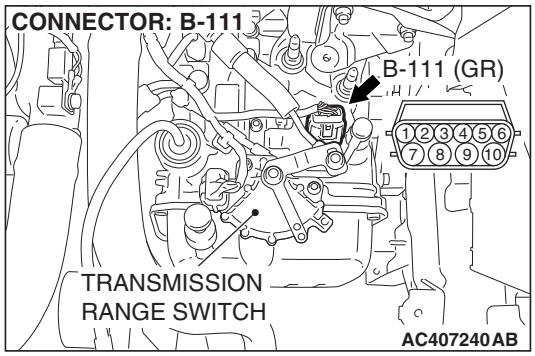

(1) Disconnect connector B-111 and measure at the solenoid valve side.

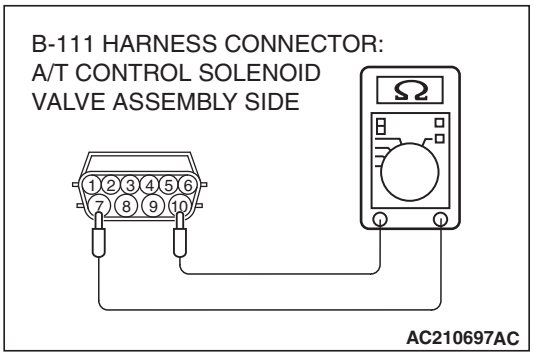

(2) Measure the resistance between solenoid valve assembly connector B-111 terminals 7 and 10.

Resistance value: 2.7–3.4 Ω [at 20°C (68°F)]

Q: Is the measured resistance 2.7–3.4 Ω [at 20°C (68°F)]?

YES : Go to Step 6.

NO : Go to Step 5.

STEP 5. Measure the solenoid valve resistance at the torque converter clutch solenoid valve assembly inside the transaxle.

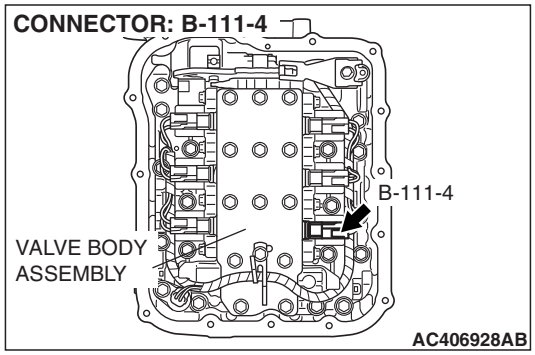

(1) Disconnect connector B-111-4 and measure at the solenoid valve side.

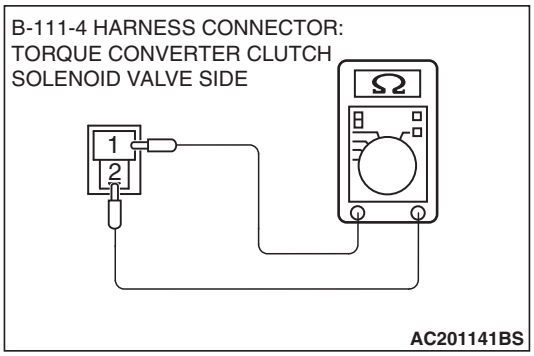

(2) Measure the resistance between torque converter clutch solenoid valve terminals 1 and 2.

Resistance value: 2.7–3.4 Ω [at 20°C (68°F)]

Q: Is the measured resistance 2.7–3.4 Ω [at 20°C (68°F)?

YES : Replace the harness wire between A/T control solenoid valve assembly connector B-111 and the solenoid valves.

NO : Replace the torque converter clutch solenoid valve. Refer to GROUP 23B, P.23B-65 Valve Body <4A/T> or Refer to GROUP 23C, P.23C-73 Valve Body <5A/T>.

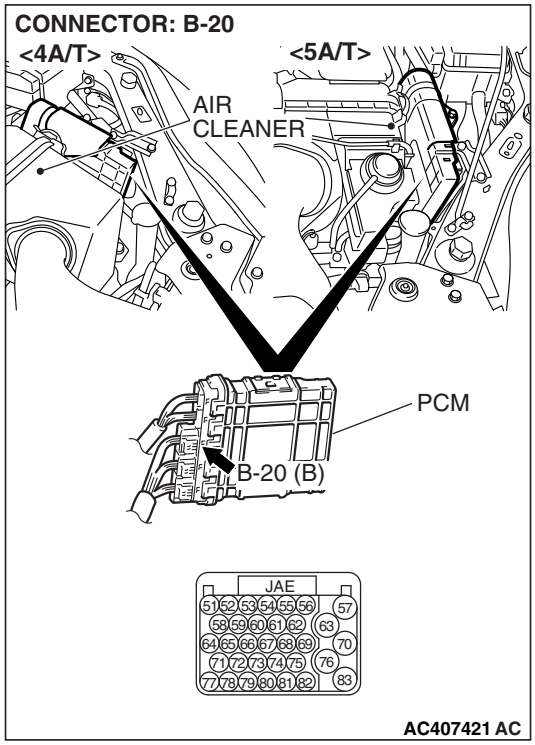

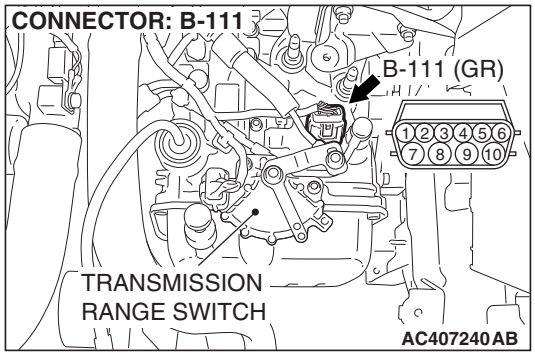

STEP 6. Check PCM connector B-20 and A/T control solenoid valve assembly connector B-111 for loose, corroded or damaged terminals, or terminals pushed back in the connector.

Q: Are the connectors and terminals in good condition?

YES : Go to Step 7.

NO : Repair or replace the damaged components. Refer to GROUP 00E, Harness Connector Inspection P.00E-2.

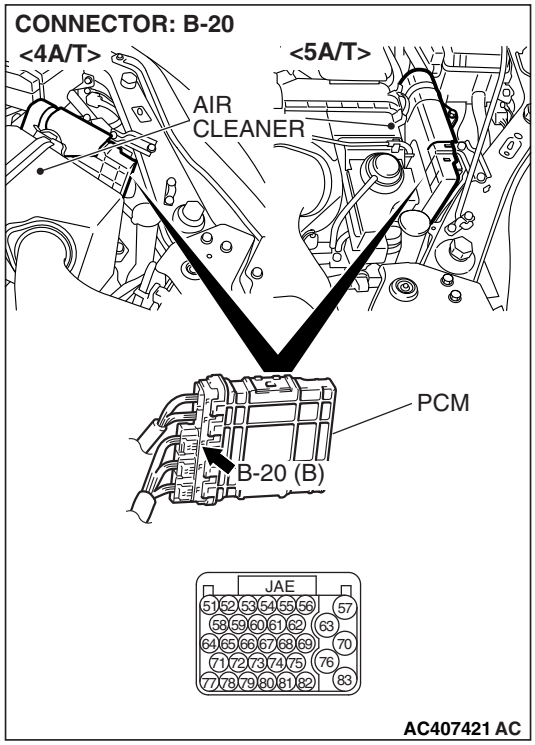

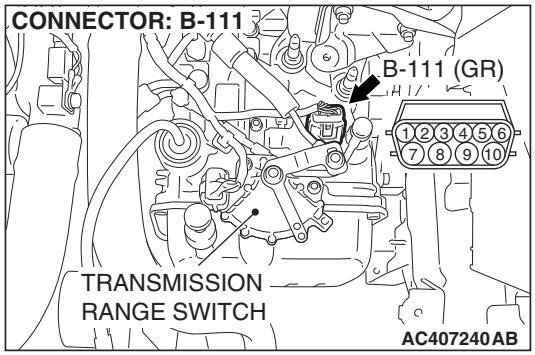

STEP 7. Check the harness for an open or short circuit to ground between PCM connector B-20 terminal 54 and A/T control solenoid valve assembly connector B-111 terminal 7.

Q: Is the harness wire in good condition?

YES : Replace the PCM. When the PCM is replaced, register the encrypted code. Refer to GROUP 54A, Encrypted Code Registration Criteria Table P.54A-19.

NO : Repair or replace the harness wire.

STEP 8. Measure the supply voltage at A/T control solenoid valve assembly connector B-111.

(1) Disconnect solenoid valve assembly harness connector B-111.

(2) Turn the ignition switch to the "ON" position.

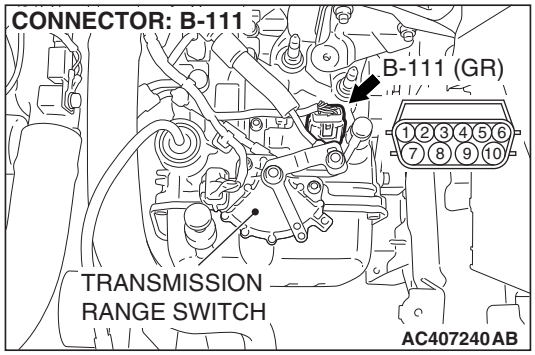

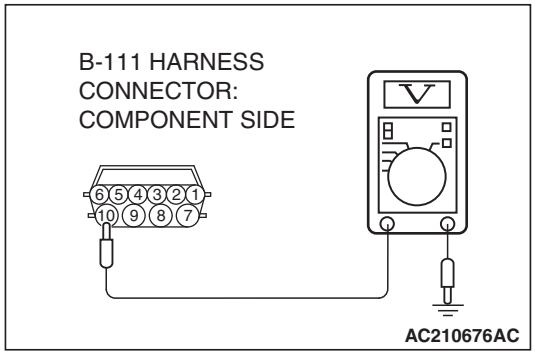

(3) Measure the voltage between harness connector B-111 terminal 10 and ground.
- The voltage should equal battery positive voltage.

(4) Turn the ignition switch to the "LOCK" (OFF) position.

Q: Is the measured voltage battery positive voltage?

YES : Go to Step 11.

NO : Go to Step 9.

STEP 9. Check A/T control relay connector B-15X in the engine component relay box and A/T control solenoid valve assembly connector B-111 for loose, corroded or damaged terminals, or terminals pushed back in the connector.

Q: Are the connectors and terminals in good condition?

YES : Go to Step 10.

NO : Repair or replace the damaged components. Refer to GROUP 00E, Harness Connector Inspection P.00E-2.

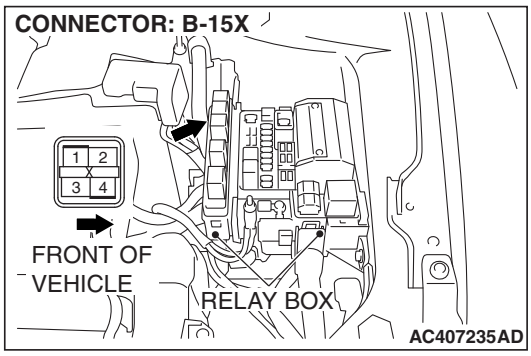

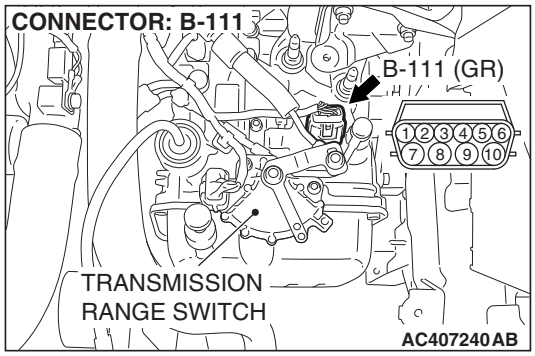

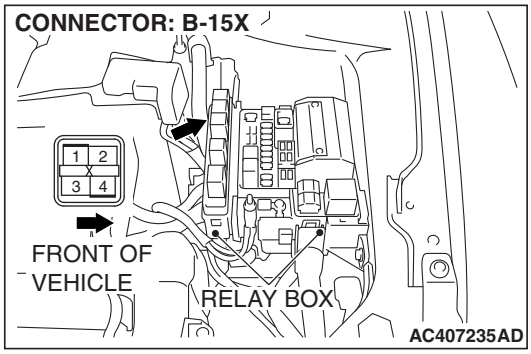

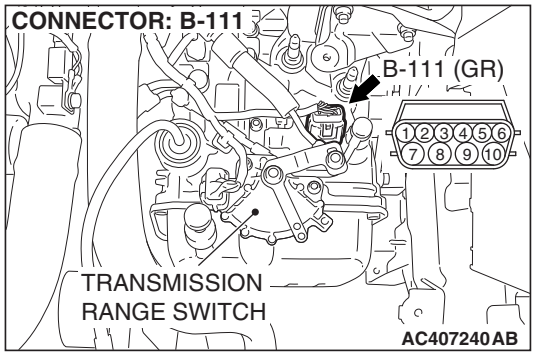

STEP 10. Check the harness for an open circuit or short circuit to ground between A/T control relay connector B-15X terminal 4 in the engine component relay box and A/T control solenoid valve assembly connector B-111 terminal 10.

Q: Is the harness wire in good condition?

YES : Go to Step 11.

NO : Repair or replace the harness wire.

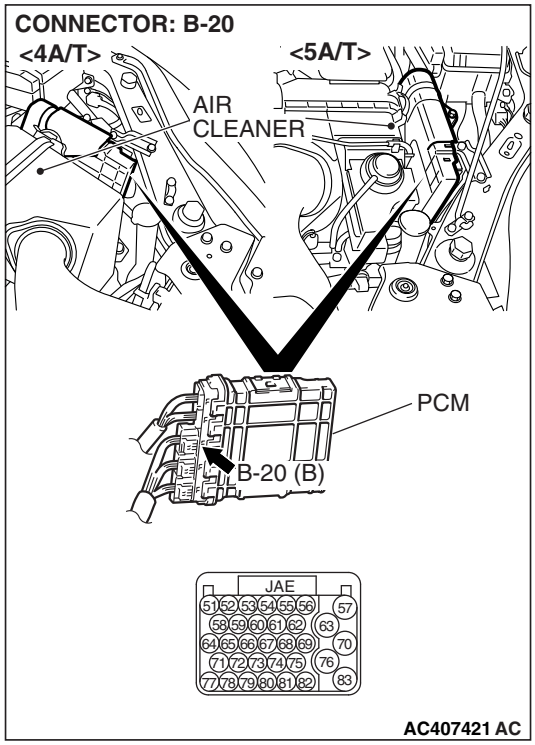

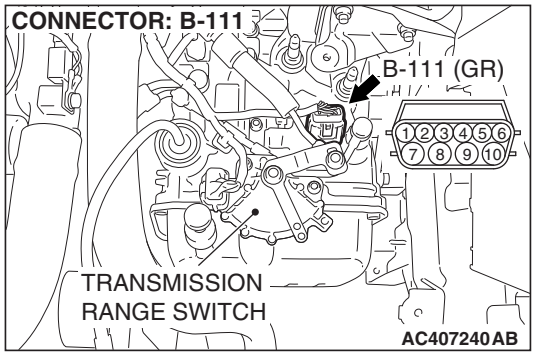

STEP 11. Check PCM connector B-20 and A/T control solenoid valve assembly connector B-111 for loose, corroded or damaged terminals, or terminals pushed back in the connector.

Q: Are the connectors and terminals in good condition?

YES : Go to Step 12.

NO : Repair or replace the damaged components. Refer to GROUP 00E, Harness Connector Inspection P.00E-2.

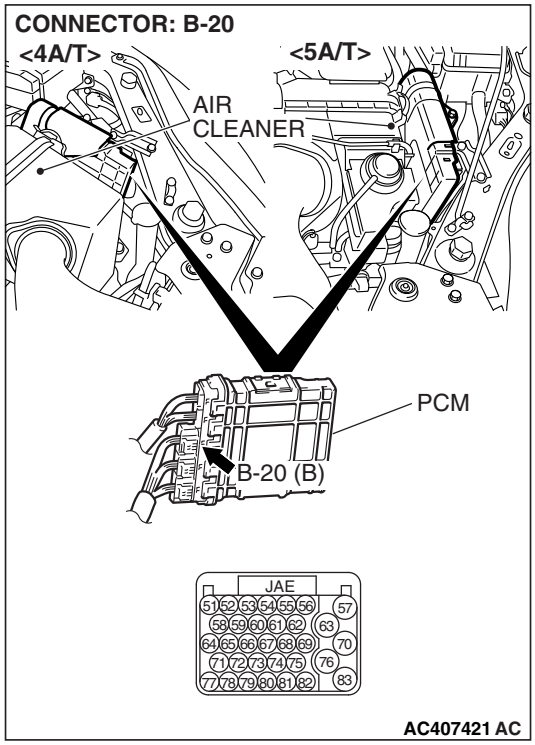

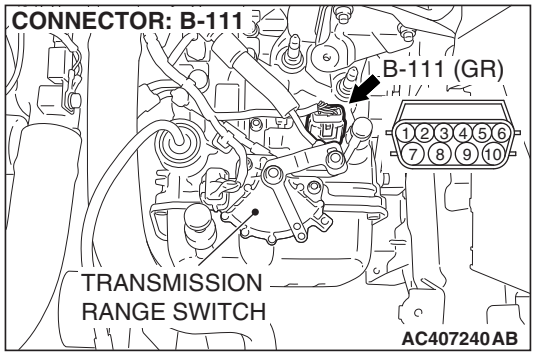

STEP 12. Check the harness for an open or short circuit to ground between PCM connector B-20 (terminals 54, 56 and 53 <5A/T>) and A/T control solenoid valve assembly connector B-111 (terminals 6, 7 and 8 <5A/T>).

Q: Are the harness wires in good condition?

YES : Go to Step 13.

NO : Repair or replace the harness wire.

STEP 13. Check the harness for an open or short circuit to ground between A/T control solenoid valve assembly connector B-111 (terminals 6, 7, 8 <5A/T> and 10) and solenoid valve connectors B-111-4 and B-111-5 and B-111-6 <5A/T>.

Q: Is the harness wire in good condition?

YES : Replace the PCM. When the PCM is replaced, register the encrypted code. Refer to GROUP 54A, Encrypted Code Registration Criteria Table P.54A-19.

NO : Replace the harness wire.

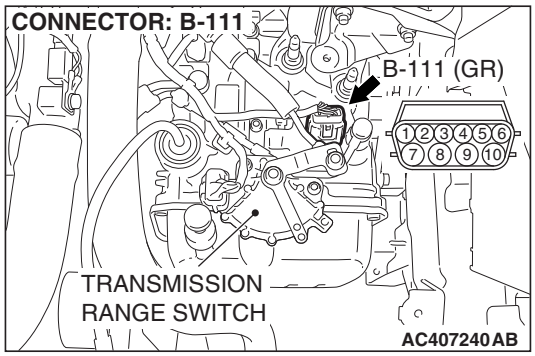

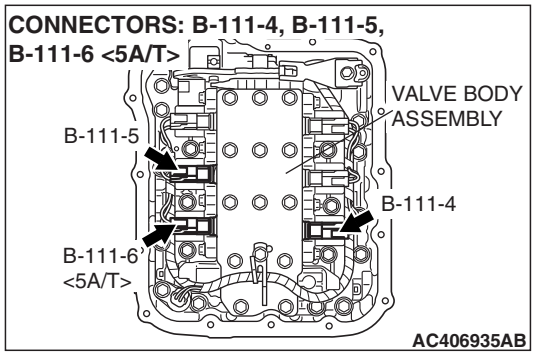

DTC P1779 (P0731): 1st Gear Incorrect Ratio
DTC P1780 (P0732): 2nd Gear Incorrect Ratio
DTC P1781 (P0733): 3rd Gear Incorrect Ratio
DTC P1782 (P0734): 4th Gear Incorrect Ratio
DTC P1783 (P0735): 5th Gear Incorrect Ratio <5A/T>
DTC P1784 (P0736): Reverse Gear Incorrect Ratio

CIRCUIT OPERATION

- The input shaft speed sensor generates a pulsed signal of 0 ⇔ 5 volts. The pulsed signal frequency increases with an increase in the input shaft speed.
- The PCM continuously monitors the input shaft speed signal.
- The output shaft speed sensor generates a pulsed signal of 0 ⇔ 5 volts. The pulsed signal frequency increases with an increase in the output shaft speed.
- The PCM continuously monitors the output shaft speed signal.

DESCRIPTIONS OF MONITOR METHODS <DTC P1779 (P0731)>

- In 1st gear, if a difference between turbine revolution and that value calculated from output revolution equals or exceeds specified value, PCM judges that step-out in 1st gear has occurred.

MONITOR EXECUTION <DTC P1779 (P0731)>

- Continuous

MONITOR EXECUTION CONDITIONS (OTHER MONITOR AND SENSOR) <DTC P1779 (P0731)>

Other Monitor (There is no temporary DTC stored in memory for the item monitored below)

- DTC P1770 (P0705): Transmission range switch malfunction (Open circuit)
- DTC P1771 (P0705): Transmission range switch malfunction (Short circuit)
- DTC P1766 (P0715): Input shaft speed sensor malfunction
- DTC P1767 (P0720): Output shaft speed sensor malfunction
- DTC P1778 (P0743): Torque converter clutch solenoid malfunction
- DTC P1773 (P0753): Low-reverse solenoid malfunction
- DTC P1774 (P0758): Underdrive solenoid malfunction
- DTC P1775 (P0763): Second solenoid malfunction
- DTC P1776 (P0768): Overdrive solenoid malfunction
- DTC P1777 (P0773): Reduction solenoid malfunction <5A/T>
- DTC P1788 (P1751): A/T control relay malfunction

Sensor (The sensor below is determined to be normal)

- Input shaft speed sensor
- Output shaft speed sensor
- Transmission range switch
- Torque converter clutch solenoid
- Low-reverse solenoid
- Underdrive solenoid
- Second solenoid
- Overdrive solenoid
- Reduction solenoid <5A/T>
- A/T control relay

LOGIC FLOW CHARTS (Monitor Sequence) <DTC P1779 (P0731)>

N_E : Engine speed

N_{OPG-B} : Output speed (output shaft speed sensor)

N_{IPG-A} : Input speed (input shaft speed sensor)

I_1 : 1st gear ratio

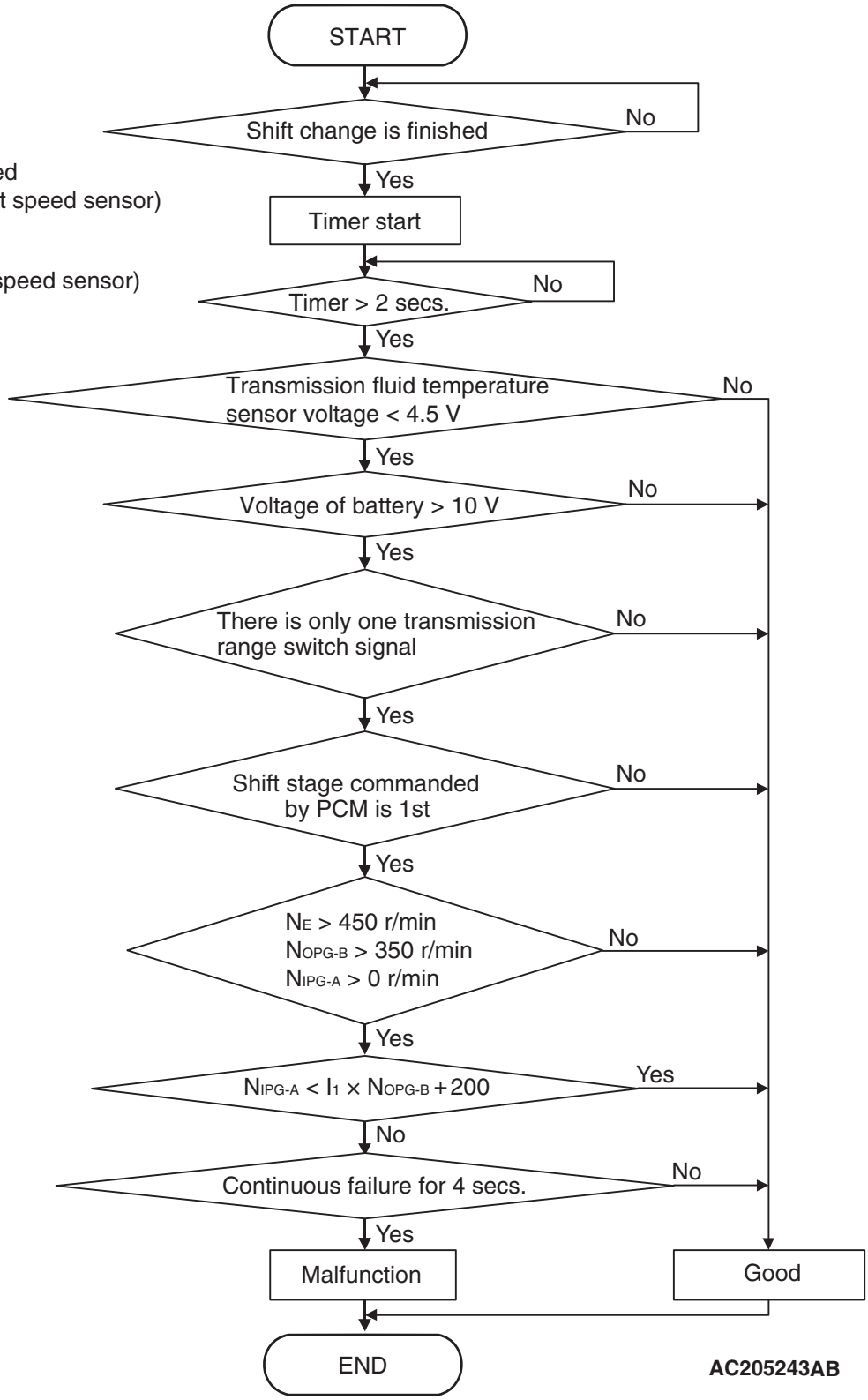

DTC SET CONDITIONS <DTC P1779 (P0731)>

Check Conditions

- Engine speed: 450 r/min or more.
- Output speed: 350 r/min or more.
- Shift stage: 1st gear.
- Input speed: more than 0 r/min.
- Transmission fluid temperature sensor voltage: 4.5 volts or less.

TSB Revision

- Voltage of battery: 10 volts or more.
- Transmission range switch rationality: only one signal.
- Time after shift changing finish: 2 seconds or more.

Judgement Criteria

- Output speed: [(input speed - 200 r/min) / 1st gear ratio] or less. (4 seconds)

DESCRIPTIONS OF MONITOR METHODS <DTC P1780 (P0732)>

- In 2nd gear, if a difference between turbine revolution and that value calculated from output revolution equals or exceeds specified value, PCM judges that step-out in 2nd gear has occurred.

MONITOR EXECUTION <DTC P1780 (P0732)>

- Continuous

MONITOR EXECUTION CONDITIONS (OTHER MONITOR AND SENSOR) <DTC P1780 (P0732)>

Other Monitor (There is no temporary DTC stored in memory for the item monitored below)

- DTC P1770 (P0705): Transmission range switch malfunction (Open circuit)
- DTC P1771 (P0705): Transmission range switch malfunction (Short circuit)
- DTC P1766 (P0715): Input shaft speed sensor malfunction
- DTC P1767 (P0720): Output shaft speed sensor malfunction
- If DTC P1779 (P0731) is set consecutively four times, the transaxle is locked into 3rd gear as a fail-safe measure, and the selector lever position indicator light (D, 1 through 4 or 5) flashes once per second.

OBD-II DRIVE CYCLE PATTERN <DTC P1779 (P0731)>

Start the engine, and drive at 20 km/h (12 mph) or more for 10 seconds, with 1st gear fixed (1st gear in sport mode).

- DTC P1778 (P0743): Torque converter clutch solenoid malfunction
- DTC P1773 (P0753): Low-reverse solenoid malfunction
- DTC P1774 (P0758): Underdrive solenoid malfunction
- DTC P1775 (P0763): Second solenoid malfunction
- DTC P1776 (P0768): Overdrive solenoid malfunction
- DTC P1777 (P0773): Reduction solenoid malfunction <5A/T>
- DTC P1788 (P1715): A/T control relay malfunction

Sensor (The sensor below is determined to be normal)

- Input shaft speed sensor
- Output shaft speed sensor
- Transmission range switch
- Torque converter clutch solenoid
- Low-reverse solenoid
- Underdrive solenoid
- Second solenoid
- Overdrive solenoid
- Reduction solenoid <5A/T>
- A/T control relay

LOGIC FLOW CHARTS (Monitor Sequence) <DTC P1780 (P0732)>

N_E : Engine speed

N_{OPG-B} : Output speed (output shaft speed sensor)

N_{IPG-A} : Input speed (input shaft speed sensor)

I_2 : 2nd gear ratio

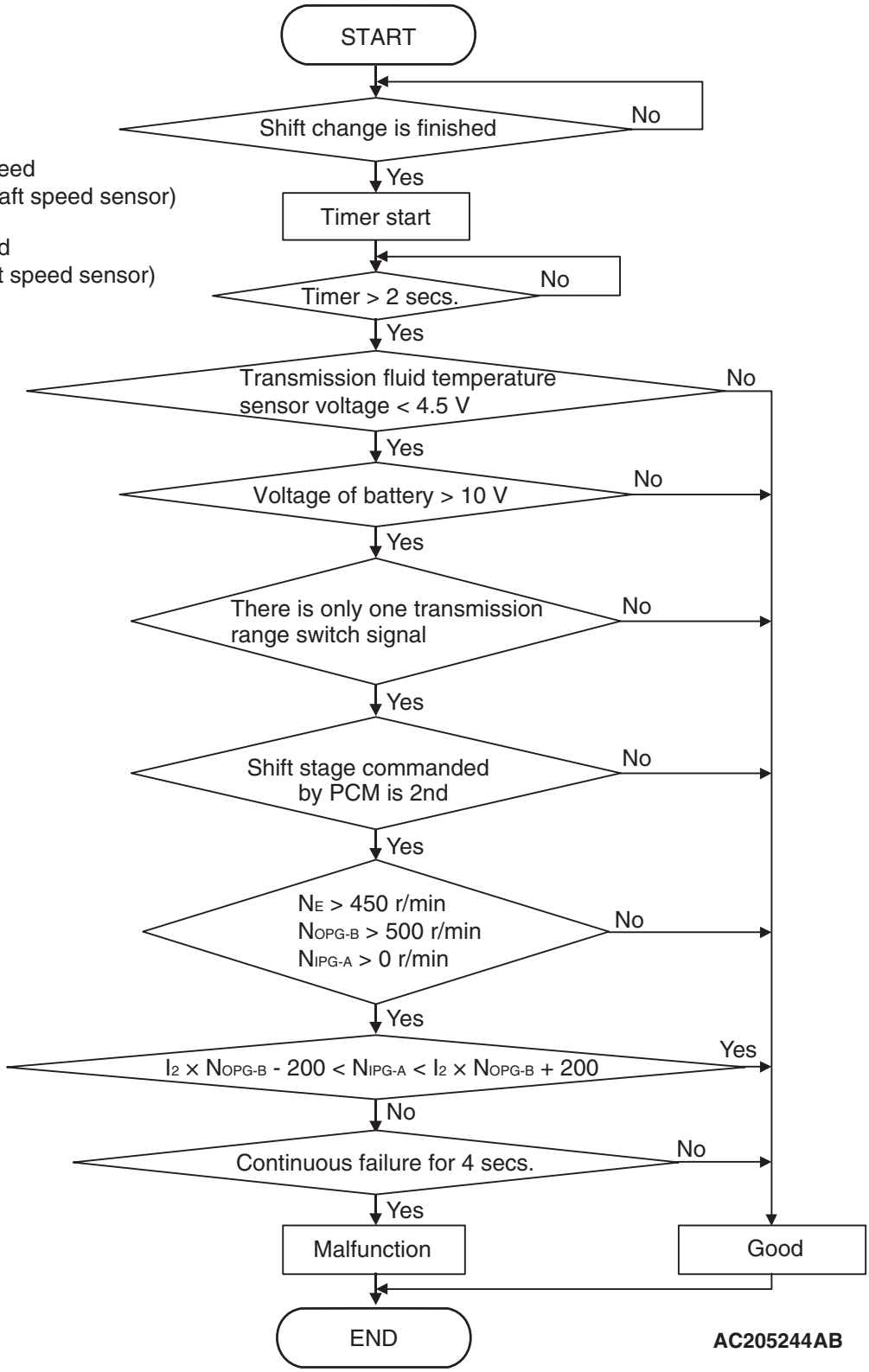

DTC SET CONDITIONS <DTC P1780 (P0732)>

Check Conditions

- Engine speed: 450 r/min or more.
- Output speed: 500 r/min or more.
- Shift stage: 2nd gear.
- Input speed: more than 0 r/min.
- Transmission fluid temperature sensor voltage: 4.5 volts or less.

TSB Revision

- Voltage of battery: 10 volts or more.
- Transmission range switch rationality: only one signal.
- Time after shift changing finish: 2 seconds or more.

Judgement Criteria

- Output speed: [(input speed + 200 r/min) / 2nd gear ratio] or more. (4 seconds)
- Output speed: [(input speed - 200 r/min) / 2nd gear ratio] or less. (4 seconds)

DESCRIPTIONS OF MONITOR METHODS <DTC P1781 (P0733)>

- In 3rd gear, if a difference between turbine revolution and that value calculated from output revolution equals or exceeds specified value, PCM judges that step-out in 3rd gear has occurred.

MONITOR EXECUTION <DTC P1781 (P0733)>

- Continuous

MONITOR EXECUTION CONDITIONS (OTHER MONITOR AND SENSOR) <DTC P1781 (P0733)>

Other Monitor (There is no temporary DTC stored in memory for the item monitored below)

- DTC P1770 (P0705): Transmission range switch malfunction (Open circuit)
- DTC P1771 (P0705): Transmission range switch malfunction (Short circuit)
- DTC P1766 (P0715): Input shaft speed sensor malfunction
- DTC P1767 (P0720): Output shaft speed sensor malfunction
- If DTC P1780 (P0732) is set consecutively four times, the transaxle is locked into 3rd gear as a fail-safe measure, and the selector lever position indicator light (D, 1 through 4 or 5) flashes once per second.

OBD-II DRIVE CYCLE PATTERN <DTC P1780 (P0732)>

Start the engine, and drive at 30 km/h (19 mph) or more for 10 seconds, with 2nd gear fixed (2nd gear in sport mode).

- DTC P1778 (P0743): Torque converter clutch solenoid malfunction
- DTC P1773 (P0753): Low-reverse solenoid malfunction
- DTC P1774 (P0758): Underdrive solenoid malfunction
- DTC P1775 (P0763): Second solenoid malfunction
- DTC P1776 (P0768): Overdrive solenoid malfunction
- DTC P1777 (P0773): Reduction solenoid malfunction <5A/T>
- DTC P1788 (P1751): A/T control relay malfunction

Sensor (The sensor below is determined to be normal)

- Input shaft speed sensor
- Output shaft speed sensor
- Transmission range switch
- Torque converter clutch solenoid
- Low-reverse solenoid
- Underdrive solenoid
- Second solenoid
- Overdrive solenoid
- Reduction solenoid <5A/T>
- A/T control relay

LOGIC FLOW CHARTS (Monitor Sequence) <DTC P1781 (P0733)>

N_E : Engine speed

N_{OPG-B} : Output speed (output shaft speed sensor)

N_{IPG-A} : Input speed (input shaft speed sensor)

I_3 : 3rd gear ratio

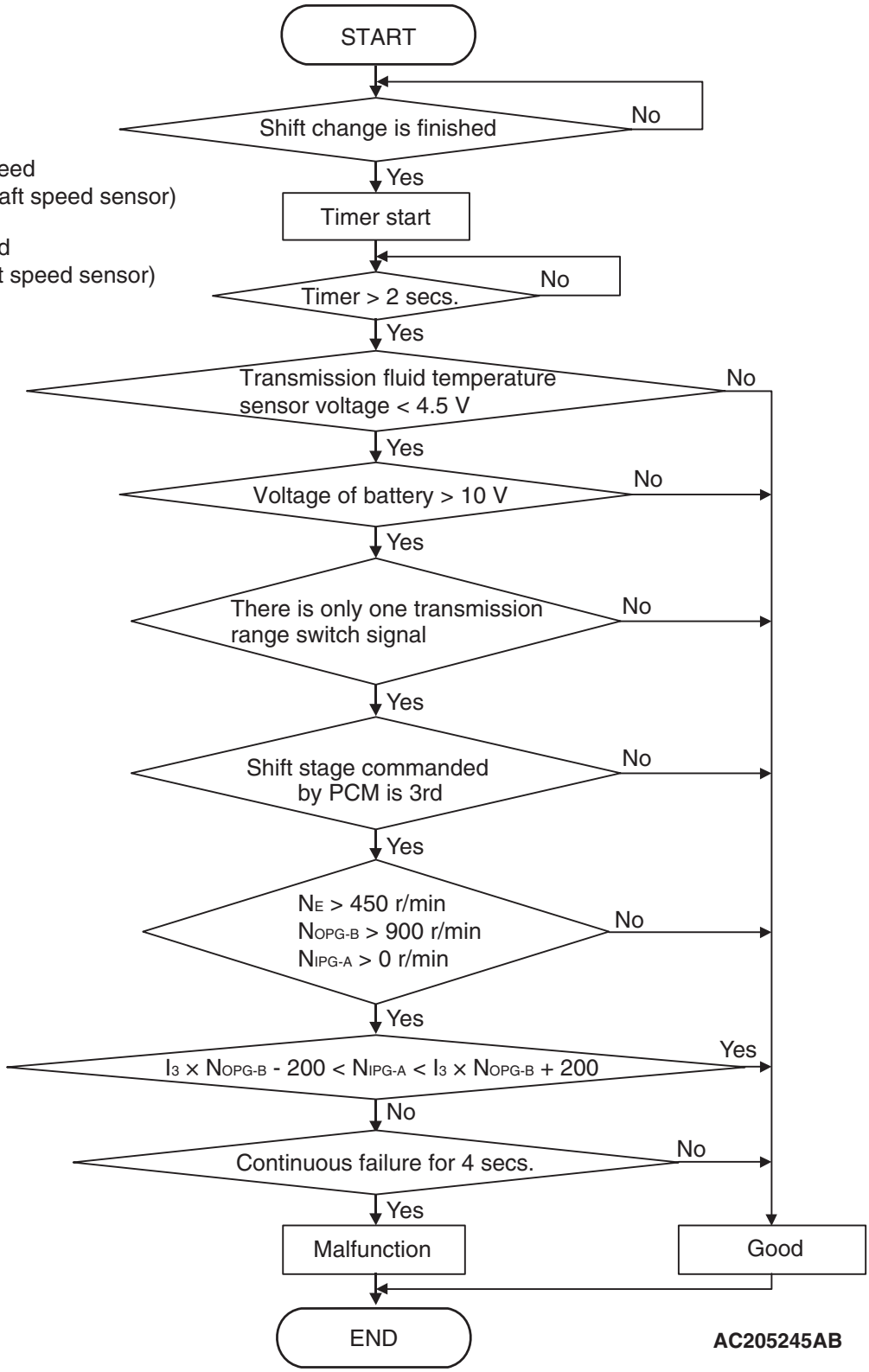

DTC SET CONDITIONS <DTC P1781 (P0733)>

Check Conditions

- Engine speed: 450 r/min or more.
- Output speed: 900 r/min or more.
- Shift stage: 3rd gear.
- Input speed: more than 0 r/min.
- Transmission fluid temperature sensor voltage: 4.5 volts or less.

TSB Revision

- Voltage of battery: 10 volts or more.
- Transmission range switch rationality: only one signal.
- Time after shift changing finish: 2 seconds or more.

Judgement Criteria

- Output speed: [(input speed + 200 r/min) / 3rd gear ratio] or more. (4 seconds)
- Output speed: [(input speed - 200 r/min) / 3rd gear ratio] or less. (4 seconds)

DESCRIPTIONS OF MONITOR METHODS <DTC P1782 (P0734)>

- In 4th gear, if a difference between turbine revolution and that value calculated from output revolution equals or exceeds specified value, PCM judges that step-out in 4th gear has occurred.

MONITOR EXECUTION <DTC P1782 (P0734)>

- Continuous

MONITOR EXECUTION CONDITIONS (OTHER MONITOR AND SENSOR) <DTC P1782 (P0734)>

Other Monitor (There is no temporary DTC stored in memory for the item monitored below)

- DTC P1770 (P0705): Transmission range switch malfunction (Open circuit)
- DTC P1771 (P0705): Transmission range switch malfunction (Short circuit)
- DTC P1766 (P0715): Input shaft speed sensor malfunction
- DTC P1767 (P0720): Output shaft speed sensor malfunction
- If DTC P1781 (P0733) is set consecutively four times, the transaxle is locked into 3rd gear as a fail-safe measure, and the selector lever position indicator light (D, 1 through 4 or 5) flashes once per second.

OBD-II DRIVE CYCLE PATTERN <DTC P1781 (P0733)>

Start the engine, and drive at 40 km/h (25 mph) or more for 10 seconds, with 3rd gear fixed (3rd gear in sport mode).

- DTC P1778 (P0743): Torque converter clutch solenoid malfunction
- DTC P1773 (P0753): Low-reverse solenoid malfunction
- DTC P1774 (P0758): Underdrive solenoid malfunction
- DTC P1775 (P0763): Second solenoid malfunction
- DTC P1776 (P0768): Overdrive solenoid malfunction
- DTC P1777 (P0773): Reduction solenoid malfunction <5A/T>
- DTC P1788 (P1751): A/T control relay malfunction

Sensor (The sensor below is determined to be normal)

- Input shaft speed sensor
- Output shaft speed sensor
- Transmission range switch
- Torque converter clutch solenoid
- Low-reverse solenoid
- Underdrive solenoid
- Second solenoid
- Overdrive solenoid
- Reduction solenoid <5A/T>
- A/T control relay

LOGIC FLOW CHARTS (Monitor Sequence) <DTC P1782 (P0734)>

N_E : Engine speed

N_{OPG-B} : Output speed (output shaft speed sensor)

N_{IPG-A} : Input speed (input shaft speed sensor)

I_4 : 4th gear ratio

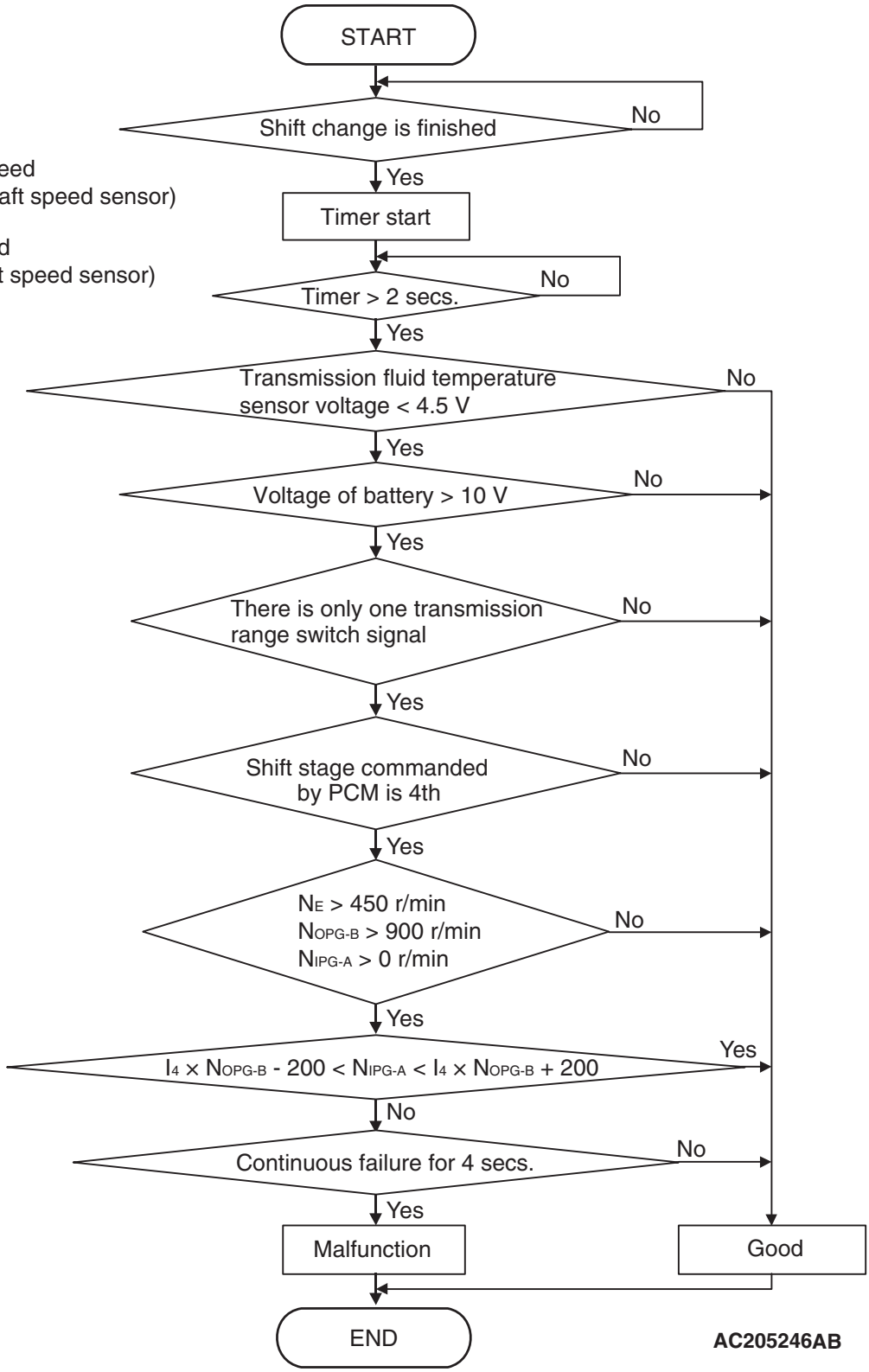

DTC SET CONDITIONS <DTC P1782 (P0734)>

Check Conditions

- Engine speed: 450 r/min or more.
- Output speed: 900 r/min or more.
- Shift stage: 4th gear.
- Input speed: more than 0 r/min.
- Transmission fluid temperature sensor voltage: 4.5 volts or less.

TSB Revision

- Voltage of battery: 10 volts or more.
- Transmission range switch rationality: only one signal.
- Time after shift changing finish: 2 seconds or more.

Judgement Criteria

- Output speed: [(input speed + 200 r/min) / 4th gear ratio] or more. (4 seconds)
- Output speed: [(input speed - 200 r/min) / 4th gear ratio] or less. (4 seconds)

DESCRIPTIONS OF MONITOR METHODS <DTC P1783 (P0735)> <5A/T>

- In 5th gear, if a difference between turbine revolution and that value calculated from output revolution equals or exceeds specified value, PCM judges that step-out in reverse gear has occurred.

MONITOR EXECUTION <DTC P1783 (P0735)> <5A/T>

- Continuous

MONITOR EXECUTION CONDITIONS (OTHER MONITOR AND SENSOR) <DTC P1783 (P0735)> <5A/T>

Other Monitor (There is no temporary DTC stored in memory for the item monitored below)

- DTC P1770 (P0705): Transmission range switch malfunction (Open circuit)
- DTC P1771 (P0705): Transmission range switch malfunction (Short circuit)
- DTC P1766 (P0715): Input shaft speed sensor malfunction
- DTC P1767 (P0720): Output shaft speed sensor malfunction
- If DTC P1782 (P0734) is set consecutively four times, the transaxle is locked into 3rd gear as a fail-safe measure, and the selector lever position indicator light (D, 1 through 4 or 5) flashes once per second.

OBD-II DRIVE CYCLE PATTERN <DTC P1782 (P0734)>

Start the engine, and drive at 40 km/h (25 mph) or more for 10 seconds, with 4th gear fixed (4th gear in sport mode).

- DTC P1778 (P0743): Torque converter clutch solenoid malfunction
- DTC P1773 (P0753): Low-reverse solenoid malfunction
- DTC P1774 (P0758): Underdrive solenoid malfunction
- DTC P1775 (P0763): Second solenoid malfunction
- DTC P1776 (P0768): Overdrive solenoid malfunction
- DTC P1777 (P0773): Reduction solenoid malfunction
- DTC P1788 (P1751): A/T control relay malfunction

Sensor (The sensor below is determined to be normal)

- Input shaft speed sensor
- Output shaft speed sensor
- Transmission range switch
- Torque converter clutch solenoid
- Low-reverse solenoid
- Underdrive solenoid
- Second solenoid
- Overdrive solenoid
- Reduction solenoid
- A/T control relay

LOGIC FLOW CHARTS (Monitor Sequence) <DTC P1783 (P0735)> <5A/T>

N_E : Engine speed

N_{OPG-B} : Output speed (output shaft speed sensor)

N_{IPG-A} : Input speed (input shaft speed sensor)

I_5 : 5th gear ratio

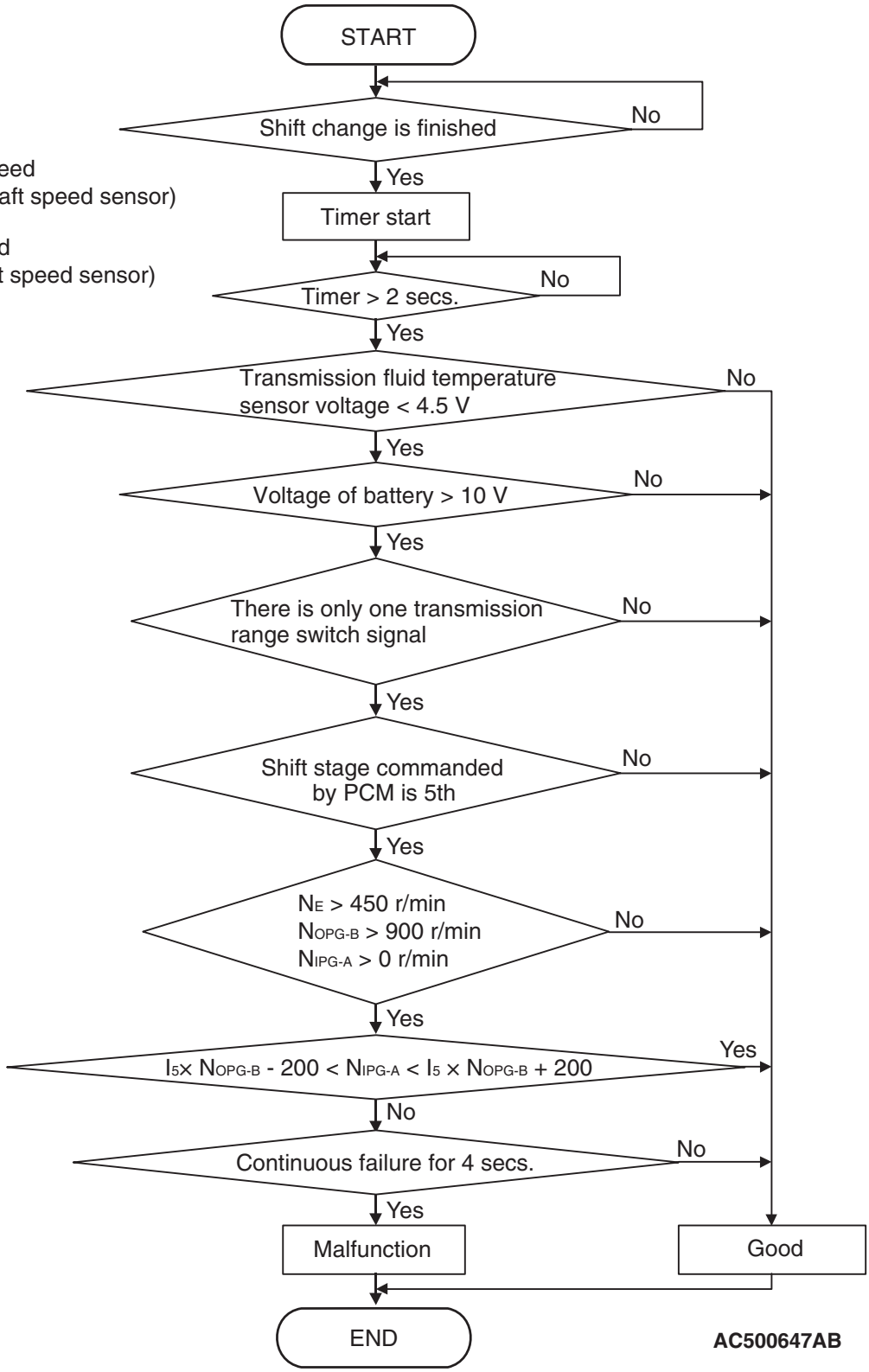

DTC SET CONDITIONS <DTC P1783 (P0735)> <5A/T>

Check Conditions

- Engine speed: 450 r/min or more.
- Output speed: 900 r/min or more.
- Shift stage: 5th gear.
- Input speed: more than 0 r/min.
- Transmission fluid temperature sensor voltage: 4.5 volts or less.

TSB Revision

- Voltage of battery: 10 volts or more.
- Transmission range switch rationality: only one signal.
- Time after shift changing finish: 2 seconds or more.

Judgement Criteria

- Output speed: [(input speed + 200 r/min) / 5th gear ratio] or more. (4 seconds)
- Output speed: [(input speed - 200 r/min) / 5th gear ratio] or less. (4 seconds)

DESCRIPTIONS OF MONITOR METHODS <DTC P1784 (P0736)>

- In reverse gear, if a difference between turbine revolution and that value calculated from output revolution equals or exceeds specified value, PCM judges that step-out in reverse gear has occurred.

MONITOR EXECUTION <DTC P1784 (P0736)>

- Continuous

MONITOR EXECUTION CONDITIONS (OTHER MONITOR AND SENSOR) <DTC P1784 (P0736)>

Other Monitor (There is no temporary DTC stored in memory for the item monitored below)

- DTC P1770 (P0705): Transmission range switch malfunction (Open circuit)
- DTC P1771 (P0705): Transmission range switch malfunction (Short circuit)
- DTC P1766 (P0715): Input shaft speed sensor malfunction
- DTC P1767 (P0720): Output shaft speed sensor malfunction
- If DTC P1782 (P0734) is set consecutively four times, the transaxle is locked into 3rd gear as a fail-safe measure, and the selector lever position indicator light (D, 1 through 4 or 5) flashes once per second.

OBD-II DRIVE CYCLE PATTERN <DTC P1783 (P0735)> <5A/T>

Start the engine, and drive at 50 km/h (31 mph) or more for 10 seconds, with 5th gear fixed (5th gear in sport mode).

- DTC P1778 (P0743): Torque converter clutch solenoid malfunction
- DTC P1773 (P0753): Low-reverse solenoid malfunction
- DTC P1774 (P0758): Underdrive solenoid malfunction
- DTC P1775 (P0763): Second solenoid malfunction
- DTC P1776 (P0768): Overdrive solenoid malfunction
- DTC P1777 (P0773): Reduction solenoid malfunction <5A/T>
- DTC P1788 (P1751): A/T control relay malfunction

Sensor (The sensor below is determined to be normal)

- Input shaft speed sensor
- Output shaft speed sensor
- Transmission range switch
- Torque converter clutch solenoid
- Low-reverse solenoid
- Underdrive solenoid
- Second solenoid
- Overdrive solenoid
- Reduction solenoid <5A/T>
- A/T control relay

LOGIC FLOW CHARTS (Monitor Sequence) <DTC P1784 (P0736)>

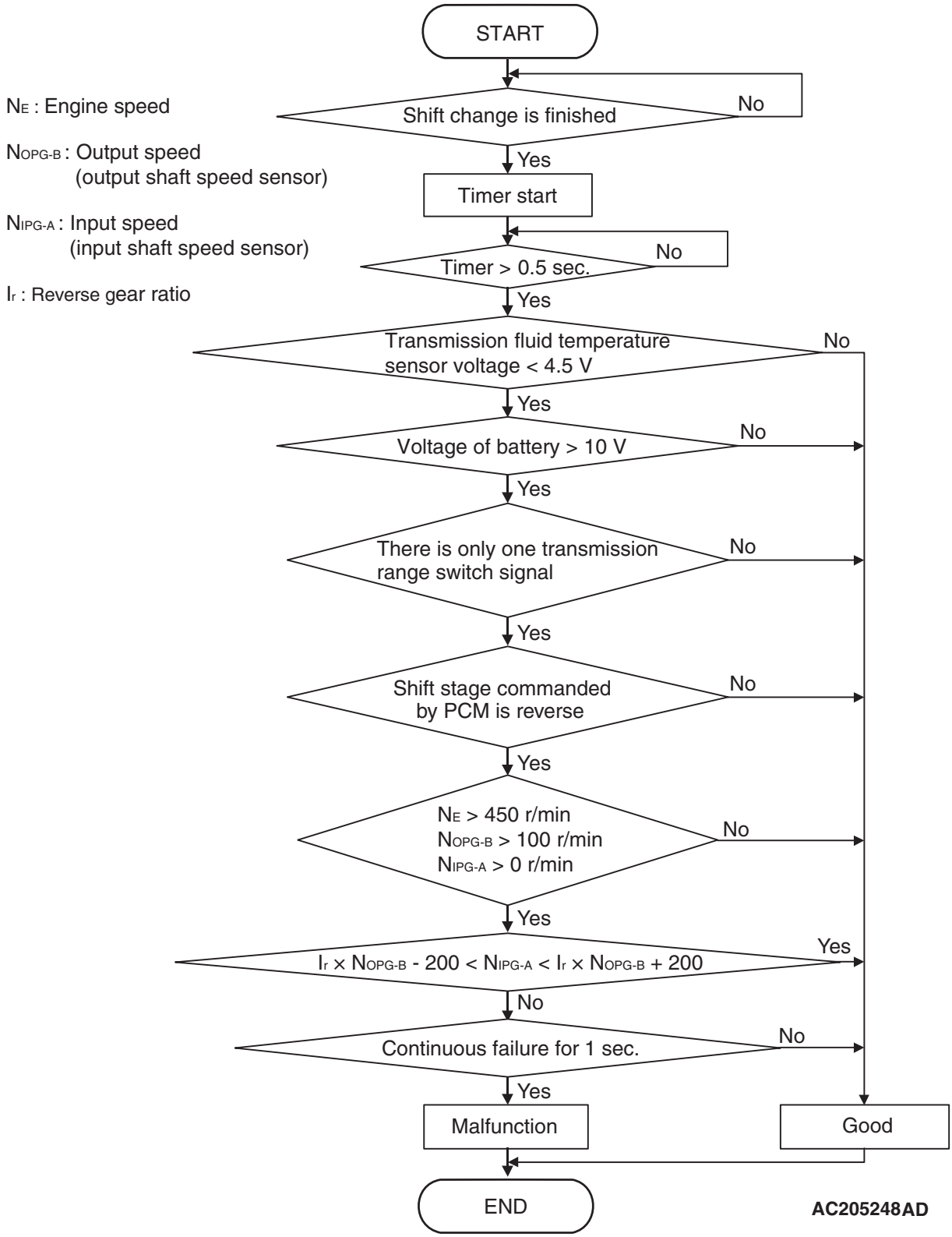

DTC SET CONDITIONS <DTC P1784 (P0736)>

Check Conditions

- Engine speed: 450 r/min or more.
- Output speed: 100 r/min or more.
- Shift stage: reverse gear.
- Input speed: more than 0 r/min.
- Transmission fluid temperature sensor voltage: 4.5 volts or less.

TSB Revision

- Voltage of battery: 10 volts or more.
- Transmission range switch rationality: only one signal.
- Time after shift changing finish: 0.5 second or more.

Judgement Criteria

- Output speed: [(input speed + 200 r/min) / reverse gear ratio] or more. (1 second)
- Output speed: [(input speed - 200 r/min) / reverse gear ratio] or less. (1 second)

TROUBLESHOOTING HINTS (THE MOST LIKELY CAUSES FOR THIS CODE TO BE SET ARE:)

- Malfunction of the input shaft speed sensor
- Malfunction of the output shaft speed sensor
- Malfunction of the PCM
- Malfunction of the underdrive clutch retainer

- If DTC P1784 (P0736) is set consecutively four times, the transaxle is locked into 3rd gear as a fail-safe measure, and the selector lever position indicator light (D, 1 through 4 or 5) flashes once per second.

OBD-II DRIVE CYCLE PATTERN <DTC P1784 (P0736)>

Start the engine, and drive in "R" range at 15 km/h (9 mph) or more for 10 seconds.

- Malfunction of the transfer drive gear or driven gear <4A/T>
- Malfunction of the direct planetary carriers <5A/T>
- Malfunction of clutch system and / or brake system
- Malfunction of the valve body
- Malfunction of the accumrator
- Electrical noise generated

DIAGNOSIS

Required Special Tools:

- MB991958: Scan Tool (M.U.T.-III Sub Assembly)
  - MB991824: V.C.I.
  - MB991827: M.U.T.-III USB Cable
  - MB991910: M.U.T.-III Main Harness A

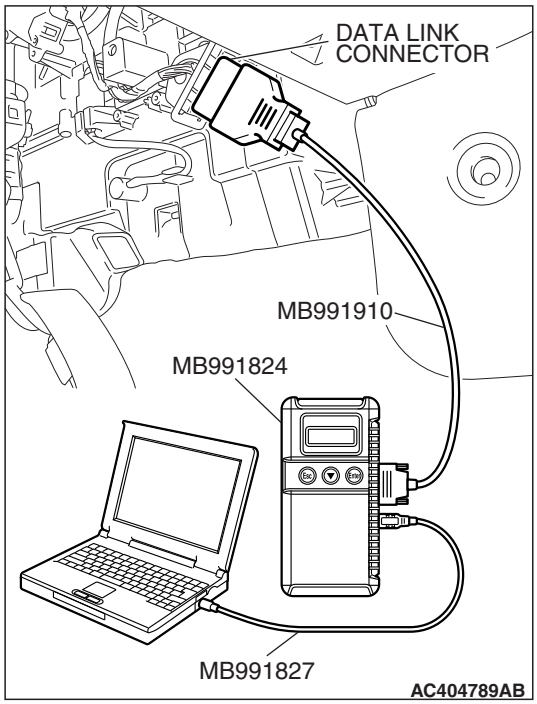

STEP 1. Using scan tool MB991958, read the A/T diagnostic trouble code.

⚠ CAUTION

To prevent damage to scan tool MB991958, always turn the ignition switch to the "LOCK" (OFF) position before connecting or disconnecting scan tool MB991958.

(1) Connect scan tool MB991958 to the data link connector.
(2) Turn the ignition switch to the "ON" position.
(3) Check for A/T diagnostic trouble code.
(4) Turn the ignition switch to the "LOCK" (OFF) position.

Q: Is DTC set?

YES <DTC P1766 (P0715) set> : Refer to P.23A-92, DTC P1766 (P0715): Input Shaft Speed Sensor System.
YES <DTC P1767 (P0720) set> : Refer to P.23A-113, DTC P1767 (P0720): Output Shaft Speed Sensor System.
YES <DTC P1773 (P0753) set> : Refer to P.23A-187, DTC P1773 (P0753): Low-Reverse Solenoid Valve System.
YES <DTC P1774 (P0758) set> : Refer to P.23A-201, DTC P1774 (P0758): Underdrive Solenoid Valve System.
YES <DTC P1775 (P0763) set> : Refer to P.23A-213, DTC P1775 (P0763): Second Solenoid Valve System.
YES <DTC P1776 (P0768) set> : Refer to P.23A-225, DTC P1776 (P0768): Overdrive Solenoid Valve System.
YES <DTC P1777 (P0773) set> : Refer to P.23A-237, DTC P1777 (P0773): Reduction Solenoid Valve System <5A/T>.
NO : Go to Step 2.

STEP 2. Check the hydraulic pressure.

Each hydraulic pressure of the elements below, which DTCs indicate, should be within the standard value. P.23A-37.

- DTC P1779 (P0731): Underdrive clutch, low-reverse brake and reduction brake <5A/T>
- DTC P1780 (P0732): Underdrive clutch, second brake and reduction brake <5A/T>
- DTC P1781 (P0733): Underdrive clutch, overdrive clutch and reduction brake <5A/T>
- DTC P1782 (P0734): Overdrive clutch, underdrive clutch <5A/T> second brake <4A/T> and direct clutch <5A/T>
- DTC P1783 (P0735) <5A/T>: Overdrive clutch, second brake and direct clutch
- DTC P1784 (P0736): Reverse clutch and low-reverse brake

Q: Are the hydraulic pressures within the standard value range?

YES : Go to Step 5.
NO <out of range in one place> : Go to Step 4.
NO <out of range in all places> : Go to Step 3.

STEP 3. Adjust the line pressure.

Adjust the line pressure. Refer to P.23A-64, Line Pressure Adjustment. Then check the symptom.

Q: Is the symptom eliminated?

YES : The procedure is complete.
NO : Go to Step 4.

STEP 4. Disassemble and clean the valve body.

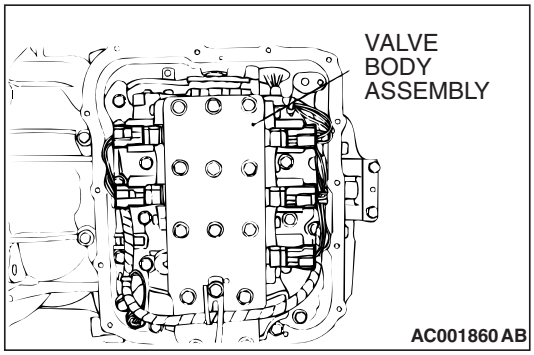

Check the O-ring installation bolts for looseness and the valve body for damage. Repair or replace the faulty parts. Refer to GROUP 23B, P.23B-65 Valve Body <4A/T> or Refer to GROUP 23C, P.23C-73 Valve Body <5A/T>.
Replace the valve body assembly if the damage is too extensive. Then check the symptom.

Q: Is the symptom eliminated?

YES : The procedure is complete.
NO : Go to Step 6.

STEP 5. Replace the PCM.

(1) Replace the PCM. When the PCM is replaced, register the encrypted code. Refer to GROUP 54A, Encrypted Code Registration Criteria Table P.54A-19.
(2) Test drive the vehicle.
(3) Check for A/T diagnostic trouble code.

Q: Were any A/T DTCs set?

YES : Go to Step 6.
NO : The procedure is complete.

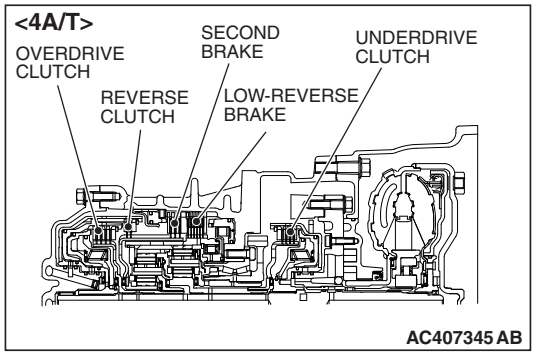

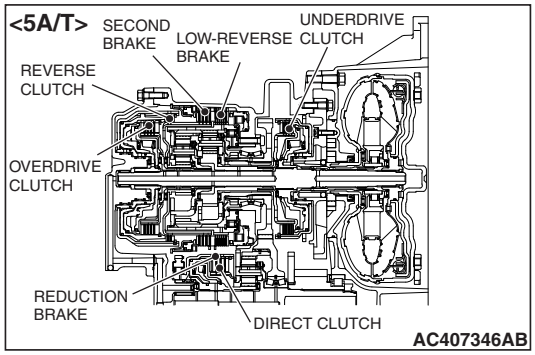

STEP 6. Overhaul the A/T.

(1) Replace the following parts.

- If DTC P1779 (P0731), DTC P1780 (P0732), or DTC P1781 (P0733) are set individually or in a group, replace the underdrive clutch. Refer to GROUP 23B, P.23B-48 Underdrive Clutch and Input Shaft <4A/T> or Refer to GROUP 23C, P.23C-52 Underdrive Clutch and Input Shaft <5A/T>.
- If DTC P1781 (P0733), DTC P1782 (P0734) or DTC P1783 (P0735) <5A/T> are set individually or in a group, replace the overdrive clutch. Refer to GROUP 23B, P.23B-51 Reverse and Overdrive Clutch <4A/T> or Refer to GROUP 23C, P.23C-55 Reverse and Overdrive Clutch <5A/T>.
- If DTC P1784 (P0736) is set, replace the reverse clutch. Refer to GROUP 23B, P.23B-51 Reverse and Overdrive Clutch <4A/T> or Refer to GROUP 23C, P.23C-55 Reverse and Overdrive Clutch <5A/T>.
- If DTC P1779 (P0731) or DTC P1784 (P0736) are set individually or in a group, replace the low-reverse brake. Refer to GROUP 23B, P.23B-8 Transaxle <4A/T> or Refer to GROUP 23C, P.23C-8 Transaxle <5A/T>.
- If DTC P1780 (P0732), DTC P1782 (P0734) <4A/T> or DTC P1783 (P0735) <5A/T> are set individually or in a group, replace the second brake. Refer to GROUP 23B, P.23B-8 Transaxle <4A/T> or Refer to GROUP 23C, P.23C-8 Transaxle <5A/T>.
- If DTC P1779 (P0731), DTC P1780 (P0732) <5A/T> or DTC P1781 (P0733) <5A/T> are set, replace the one-way clutch. Refer to GROUP 23B, P.23B-55 Planetary Gear <4A/T> or Refer to GROUP 23C, P.23B-55 Planetary Gear <5A/T>.
- If DTC P1782 (P0734) or DTC P1783 (P0735) are set individually or in a group, replace the direct clutch. Refer to GROUP 23B, P.23B-8 Transaxle <4A/T> or Refer to GROUP 23C, P.23C-8 Transaxle <5A/T>.
- If DTC P1779 (P0731), DTC P1780 (P0732), DTC P1781 (P0733) or DTC P1784 (P0736) are set individually or in a group, replace the reduction brake <5A/T>. Refer to GROUP 23C, P.23C-8 Transaxle.

(2) Test drive the vehicle.

(3) Check for A/T diagnostic trouble code.

Q: Are any A/T DTCs set again?

YES : An A/T DTC may have set due to external radio frequency interference (RFI) possibly caused by cellular phone activity, or aftermarket components installed on the vehicle.

NO : The procedure is complete.

DTC P1786 (P0741): Torque Converter Clutch System (Stuck Off)

DESCRIPTIONS OF MONITOR METHODS

- At start of lock-up operation, if lock-up clutch cannot be engaged even when duty ratio of torque converter clutch solenoid remains 100% for more than specified time, PCM judges that torque converter clutch is stuck OFF.

MONITOR EXECUTION

- Continuous

MONITOR EXECUTION CONDITIONS (OTHER MONITOR AND SENSOR)

Other Monitor (There is no temporary DTC stored in memory for the item monitored below)

- DTC P0335: Crankshaft position sensor malfunction
- DTC P1766 (P0715): Input shaft speed sensor malfunction
- DTC P1767 (P0720): Output shaft speed sensor malfunction
- DTC P1787 (P0742): Torque converter clutch system malfunction (Stuck ON)
- DTC P1778 (P0743): Torque converter clutch solenoid malfunction
- DTC P1773 (P0753): Low-reverse solenoid malfunction
- DTC P1774 (P0758): Underdrive solenoid malfunction
- DTC P1775 (P0763): Second solenoid malfunction
- DTC P1776 (P0768): Overdrive solenoid malfunction
- DTC P1777 (P0773): Reduction solenoid malfunction <5A/T>
- DTC P1788 (P1751): A/T control relay malfunction

Sensor (The sensor below is determined to be normal)

- Input shaft speed sensor
- Output shaft speed sensor
- Crankshaft position sensor
- Torque converter clutch solenoid
- Low-reverse solenoid
- Underdrive solenoid
- Second solenoid
- Overdrive solenoid
- Reduction solenoid <5A/T>
- A/T control relay

LOGIC FLOW CHARTS (Monitor Sequence)

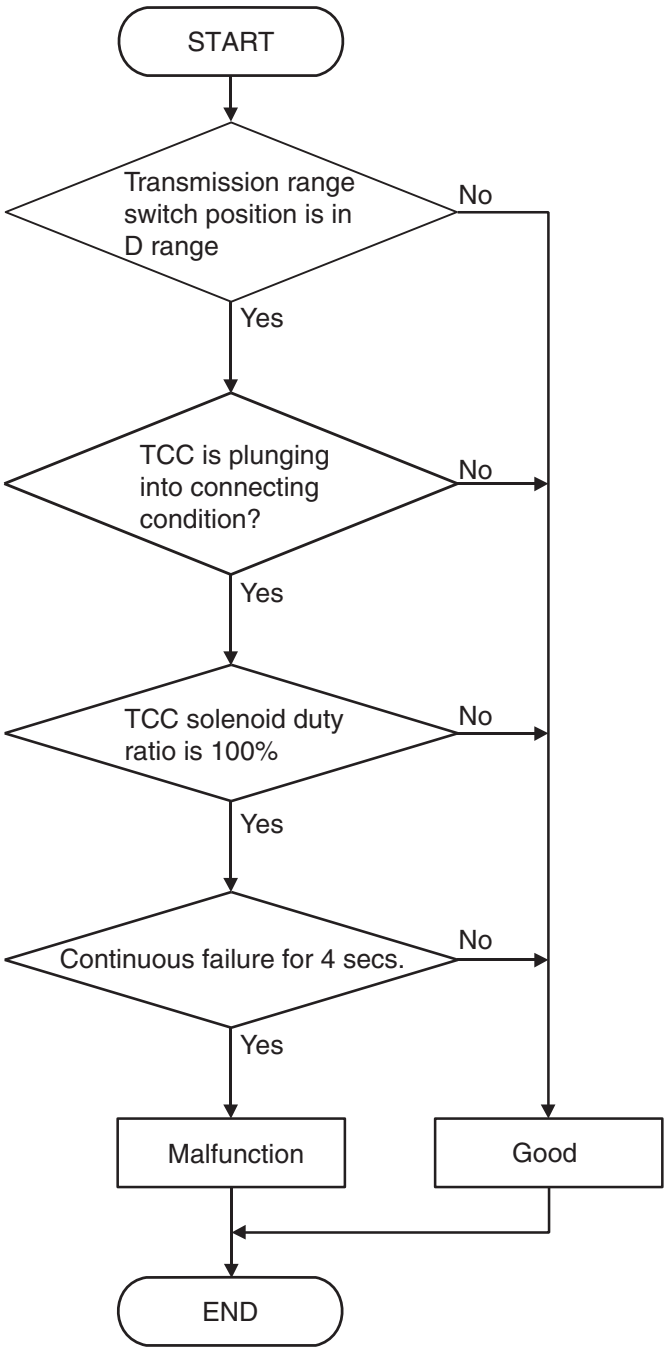

AC500369

DTC SET CONDITIONS

Check Conditions

- Solenoid status: plunging into connecting condition.
- Transmission range switch position: D.

Judgement Criteria

- Time during 100% duty: 4 seconds or more.

OBD-II DRIVE CYCLE PATTERN

Start the engine, and drive at 100 km/h (62 mph) for 10 seconds. Then stop the vehicle, and turn OFF the ignition switch. After that, restart the engine, and drive again at 100 km/h (62 mph) for 10 seconds.

TROUBLESHOOTING HINTS (THE MOST LIKELY CAUSES FOR THIS CODE TO BE SET ARE:)

- Malfunction of the torque converter clutch solenoid valve

- Malfunction of the input shaft speed sensor
- Malfunction of the valve body
- Damaged harness or connector
- Malfunction of the PCM
- Malfunction of the torque converter

DIAGNOSIS

Required Special Tools:

- MB991958: Scan Tool (M.U.T.-III Sub Assembly)
  - MB991824: V.C.I.
  - MB991827: M.U.T.-III USB Cable
  - MB991910: M.U.T.-III Main Harness A

STEP 1. Using scan tool MB991958, read the A/T diagnostic trouble code.

⚠ CAUTION

To prevent damage to scan tool MB991958, always turn the ignition switch to the "LOCK" (OFF) position before connecting or disconnecting scan tool MB991958.

(1) Connect scan tool MB991958 to the data link connector.
(2) Turn the ignition switch to the "ON" position.
(3) Check for A/T diagnostic trouble code.
(4) Turn the ignition switch to the "LOCK" (OFF) position.

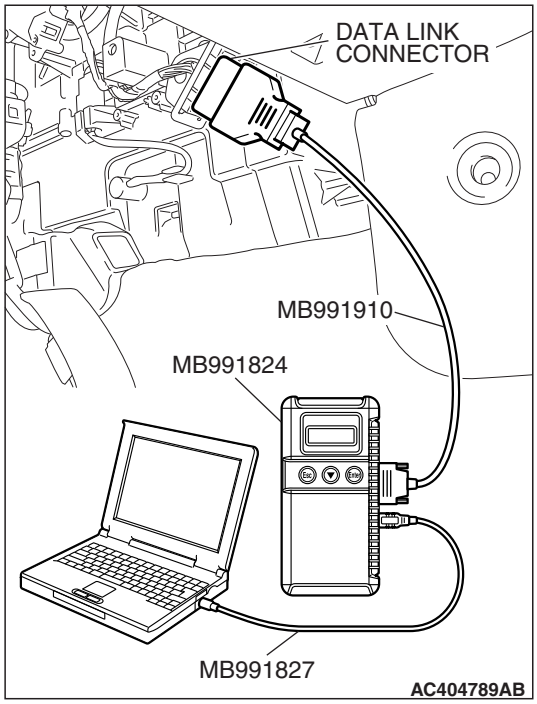

Q: Is DTC P1766 (P0715) or P1778 (P0743) set?

YES <DTC P1766 (P0715) set> : Refer to P.23A-92, DTC P1766 (P0715): Input Shaft Speed Sensor System.

YES <DTC P1778 (P0743) set> : Refer to P.23A-249, DTC P1778 (P0743): Torque Converter Clutch Solenoid Valve System.

NO : Go to Step 2.

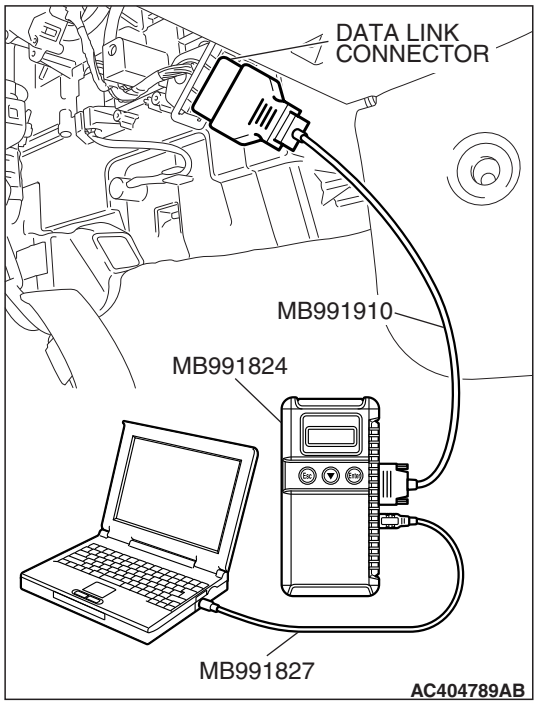

STEP 2. Using scan tool MB991958, check data list item 7: Torque Converter Clutch Solenoid Valve Duty%.

⚠ CAUTION

To prevent damage to scan tool MB991958, always turn the ignition switch to the "LOCK" (OFF) position before connecting or disconnecting scan tool MB991958.

(1) Connect scan tool MB991958 to the data link connector.
(2) Start the engine. (Warming up engine)
(3) Set scan tool MB991958 to the data reading mode.
- Item 7: Torque Converter Clutch Solenoid Valve Duty%.
  - When driving at constant speed of 60 km/h (37 mph), the display should be "70 – 99.6%" (Gear range: 3rd gear <4A/T>, 4th gear <5A/T>).
  - When the accelerator pedal is released [at less than 50 km/h (31 mph)], the display should be "70 – 99.6% → 0%" (decreases gradually as the vehicle speed decreases) (Gear range: 3rd gear <4A/T>, 4th gear <5A/T>).

(4) Turn the ignition switch to the "LOCK" (OFF) position.

Q: Is the solenoid valve operating properly?

YES : Go to Step 3.
NO : Go to Step 5.

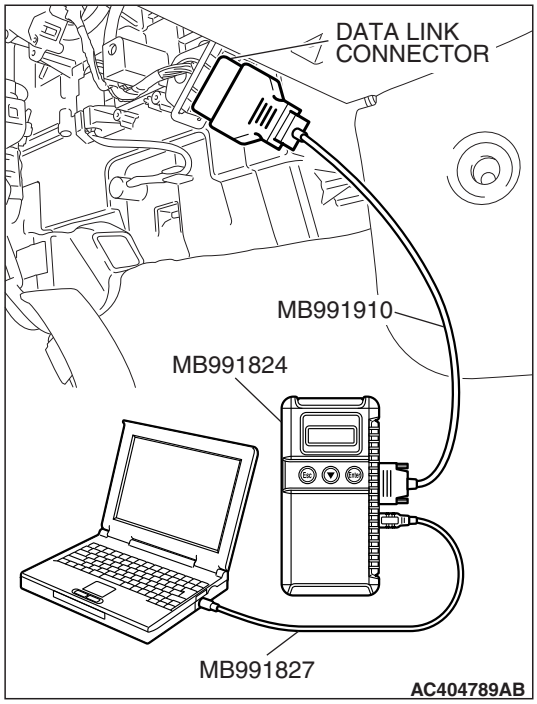

STEP 3. Using scan tool MB991958, check data list item 10: Torque Converter Clutch Amount of Slippage.

⚠ CAUTION

To prevent damage to scan tool MB991958, always turn the ignition switch to the "LOCK" (OFF) position before connecting or disconnecting scan tool MB991958.

(1) Connect scan tool MB991958 to the data link connector.
(2) Start the engine. (Warming up engine)
(3) Set scan tool MB991958 to the data reading mode.
- Item 10: Torque Converter Clutch Amount of Slippage.
  - Driving at a constant speed of 60 km/h (37 mph), the display should be "–10 to 10 r/min."
  - If the accelerator pedal is released, the display on the scan tool changes (50 km/h (31 mph) and less).

(4) Turn the ignition switch to the "LOCK" (OFF) position.

Q: Is the clutch operating properly?

YES : Go to Step 4.
NO : Go to Step 5.

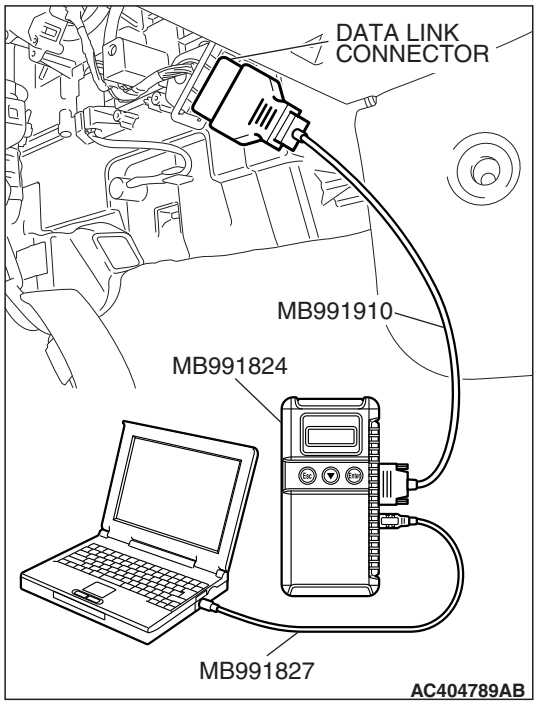

STEP 4. Using scan tool MB991958, read the A/T diagnostic trouble code.

⚠ CAUTION

To prevent damage to scan tool MB991958, always turn the ignition switch to the "LOCK" (OFF) position before connecting or disconnecting scan tool MB991958.

(1) Connect scan tool MB991958 to the data link connector.
(2) Turn the ignition switch to the "ON" position.
(3) Check for A/T diagnostic trouble code.
(4) Turn the ignition switch to the "LOCK" (OFF) position.

Q: Is DTC P1786 (P0741) set?

YES : Replace the PCM. When the PCM is replaced, register the encrypted code. Refer to GROUP 54A, Encrypted Code Registration Criteria Table P.54A-19.
NO : The procedure is complete.

STEP 5. Check the hydraulic pressure (for torque converter).

Measure the hydraulic pressure for torque converter. Check if the hydraulic pressure is within the standard value. Refer to P.23A-37, Hydraulic Pressure Test.

Q: Is the hydraulic pressure within the standard value?

YES : Go to Step 7.
NO : Go to Step 6.

STEP 6. Adjust line pressure.

Adjust line pressure. Refer to P.23A-64, Line Pressure Adjustment. Then check the symptom.

Q: Is the symptom eliminated?

YES : The procedure is complete.
NO : Go to Step 8.

STEP 7. Replace the PCM.

When the PCM is replaced, register the encrypted code. Refer to GROUP 54A, Encrypted Code Registration Criteria Table P.54A-19.

Q: Is the symptom eliminated?

YES : The procedure is complete.
NO : Go to Step 8.

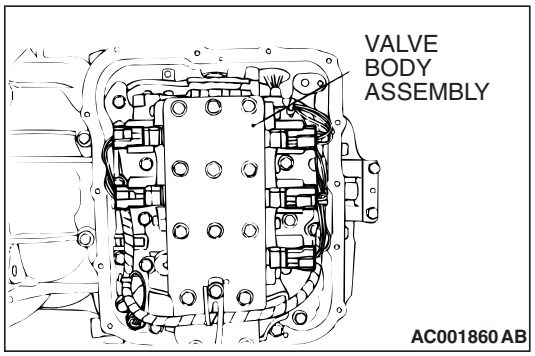

STEP 8. Replace the valve body.

(1) Replace the valve body. Refer to GROUP 23B, P.23B-8 Transaxle <4A/T> or Refer to GROUP 23C, P.23C-8 Transaxle <5A/T>.
(2) Test drive the vehicle.
(3) Check for A/T diagnostic trouble code.

Q: Is DTC 52 set?

YES : Replace the torque converter. Refer to GROUP 23B, P.23B-8 Transaxle <4A/T> or Refer to GROUP 23C, P.23C-8 Transaxle <5A/T>.

NO : The procedure is complete.

DTC P1787 (P0742): Torque Converter Clutch System (Stuck On)

DESCRIPTIONS OF MONITOR METHODS

- With PCM signal for no lock-up engagement, if vehicle speed equals or exceeds specified value, accelerator is ON, and torque converter slip amount is below specified value, PCM judges that torque converter clutch is stuck ON.

MONITOR EXECUTION

- Continuous

MONITOR EXECUTION CONDITIONS (OTHER MONITOR AND SENSOR)

Other Monitor (There is no temporary DTC stored in memory for the item monitored below)

- DTC P0335: Crankshaft position sensor malfunction
- DTC P1766 (P0715): Input shaft speed sensor malfunction
- DTC P1767 (P0720): Output shaft speed sensor malfunction
- DTC P1786 (P0741): Torque converter clutch system malfunction (Stuck OFF)
- DTC P1778 (P0743): Torque converter clutch solenoid malfunction
- P0122: Throttle position sensor (main) malfunction (Low input)
- P0123: Throttle position sensor (main) malfunction (High input)
- P0222: Throttle position sensor (sub) malfunction (Low input)
- P0223: Throttle position sensor (sub) malfunction (High input)
- P2135: Throttle position sensor (main and sub) range/performance problem
- P0638: Throttle actuator control motor circuit range/performance problem
- P0642: Throttle position sensor power supply
- P1601: Communication malfunction (Between PCM and throttle actuator control module)
- P0606: PCM main processor malfunction
- P2108: Throttle actuator control module processor malfunction
- P2100: Throttle actuator control motor circuit (Open)
- P2101: Throttle actuator control motor magneto malfunction
- P2102: Throttle actuator control motor circuit (Shorted low)
- P2103: Throttle actuator control motor circuit (Shorted high)
- P2122: Accelerator pedal position sensor (main) circuit low input
- P2123: Accelerator pedal position sensor (main) circuit high input
- P2127: Accelerator pedal position sensor (sub) circuit low input
- P2128: Accelerator pedal position sensor (sub) circuit high input
- P2138: Accelerator pedal position sensor (main and sub) range/performance problem

Sensor (The sensor below is determined to be normal)

- Input shaft speed sensor
- Output shaft speed sensor
- Crankshaft position sensor
- Torque converter clutch solenoid
- Throttle position sensor
- Accelerator pedal position sensor

LOGIC FLOW CHARTS (Monitor Sequence)

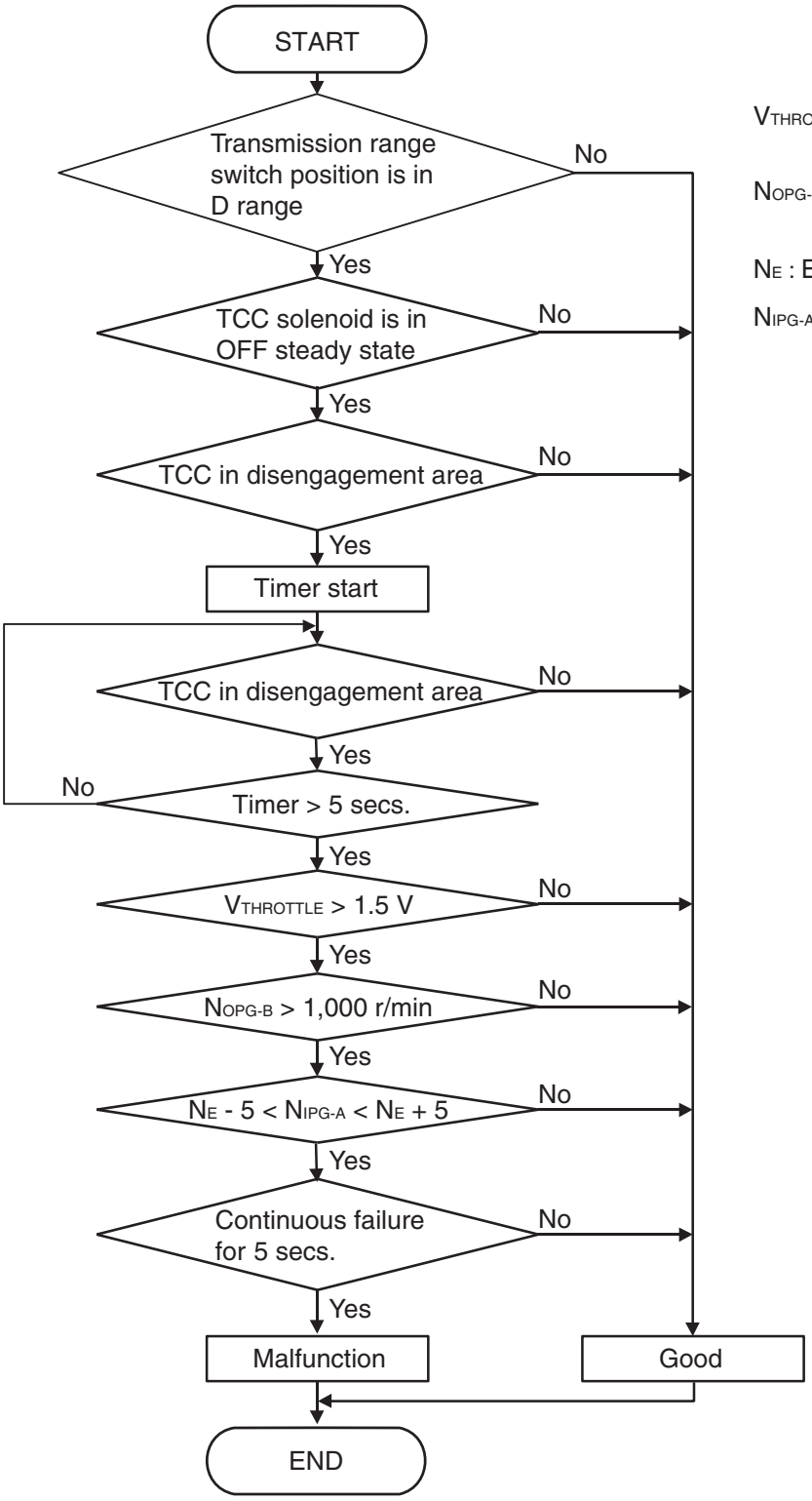

$V_{THROTTLE}$: Throttle position sensor output voltage

N_{OPG-B} : Output speed (output shaft speed sensor)

N_E : Engine speed

N_{IPG-A} : Input speed (input shaft speed sensor)

AC500371

DTC SET CONDITIONS

Check Conditions

- Throttle position sensor voltage: 1.5 volts or more.
- Output speed: 1,000 r/min or more.
- Solenoid status: OFF.
- Transmission range switch position: D.
- Time after lock up clutch release: 5 seconds or more.

Judgement Criteria

- Calculated slip (engine speed - input speed): 5 r/min or less. (5 seconds)

TSB Revision

- Calculated slip (engine speed - input speed): -5 r/min or more. (5 seconds)

OBD-II DRIVE CYCLE PATTERN

Start the engine, and drive at 30 km/h (19 mph) for 30 seconds. Then stop the vehicle, and turn "LOCK" (OFF) the ignition switch. After that, restart the engine, and drive again at 30 km/h (19 mph) for 30 seconds.

TROUBLESHOOTING HINTS (THE MOST LIKELY CAUSES FOR THIS CODE TO BE SET ARE:)

- Malfunction of the torque converter clutch solenoid valve
- Malfunction of the valve body
- Damaged harness or connector
- Malfunction of the PCM

DIAGNOSIS

Required Special Tools:

- MB991958: Scan Tool (M.U.T.-III Sub Assembly)
  - MB991824: V.C.I.
  - MB991827: M.U.T.-III USB Cable
  - MB991910: M.U.T.-III Main Harness A

STEP 1. Using scan tool MB991958, read the A/T diagnostic trouble code.

⚠ CAUTION

To prevent damage to scan tool MB991958, always turn the ignition switch to the "LOCK" (OFF) position before connecting or disconnecting scan tool MB991958.

(1) Connect scan tool MB991958 to the data link connector.
(2) Turn the ignition switch to the "ON" position.
(3) Check for A/T diagnostic trouble code.
(4) Turn the ignition switch to the "LOCK" (OFF) position.

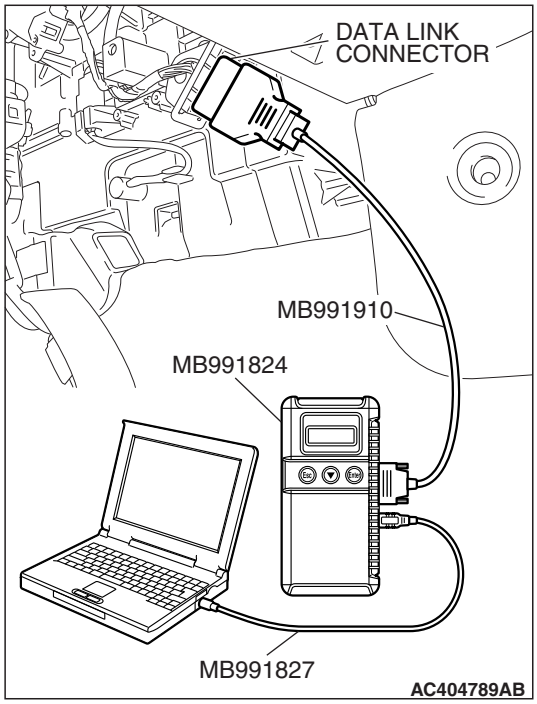

Q: Is DTC P1778 (P0743) set?

YES : Refer to P.23A-249, DTC P1778 (P0743): Torque Converter Clutch Solenoid Valve System.

NO : Go to Step 2.

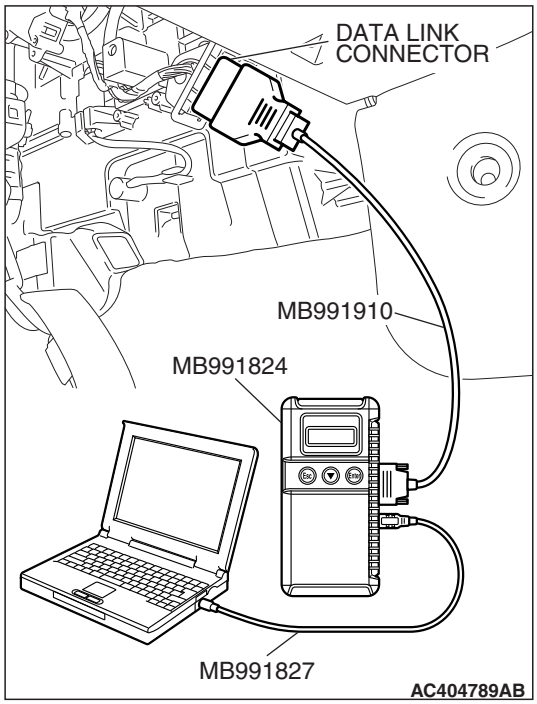

STEP 2. Using scan tool MB991958, check data list item 10: Amount of Torque Converter Clutch Slippage.

⚠ CAUTION

To prevent damage to scan tool MB991958, always turn the ignition switch to the "LOCK" (OFF) position before connecting or disconnecting scan tool MB991958.

(1) Connect scan tool MB991958 to the data link connector.
(2) Start the engine. (Warming up engine)
(3) Set scan tool MB991958 to the data reading mode.
- Item 10: Torque Converter Clutch Amount of Slippage.
  - Driving at a constant speed of 60 km/h (37 mph), the display should be "–10 to 10 r/min."
  - If the accelerator pedal is released, the display on the scan tool changes (50 km/h (31 mph) and less).

(4) Turn the ignition switch to the "LOCK" (OFF) position.

Q: Is the torque converter clutch slippage within the specified range?

YES : It can be assumed that this malfunction is intermittent. Refer to GROUP 00, How to Use Troubleshooting/Inspection Service Points – How to Cope with Intermittent Malfunction P.00-14.

NO : Go to Step 3.

STEP 3. Replace the PCM.

(1) Replace the PCM. When the PCM is replaced, register the encrypted code. Refer to GROUP 54A, Encrypted Code Registration Criteria Table P.54A-19.
(2) Test drive the vehicle.
(3) Check for A/T diagnostic trouble code.

Q: Is DTC P1787 (P0742) set?

YES : Go to Step 4.

NO : The procedure is complete.

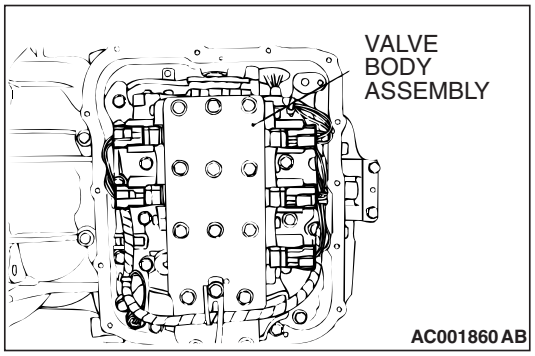

STEP 4. Replace the valve body.

(1) Replace the valve body. Refer to GROUP 23B, Transaxle P.23B-8 <4A/T> or Refer to GROUP 23C, Transaxle P.23C-8 <5A/T>.
(2) Test drive the vehicle.
(3) Check for A/T diagnostic trouble code.

Q: Is DTC 53 set?

YES : Replace the Torque Converter. Refer to GROUP 23B, Transaxle P.23B-8 <4A/T> or Refer to GROUP 23C, Transaxle P.23C-8 <5A/T>.

NO : The procedure is complete.

DTC P1788 (P1751): A/T Control Relay System

A/T Control Relay System Circuit

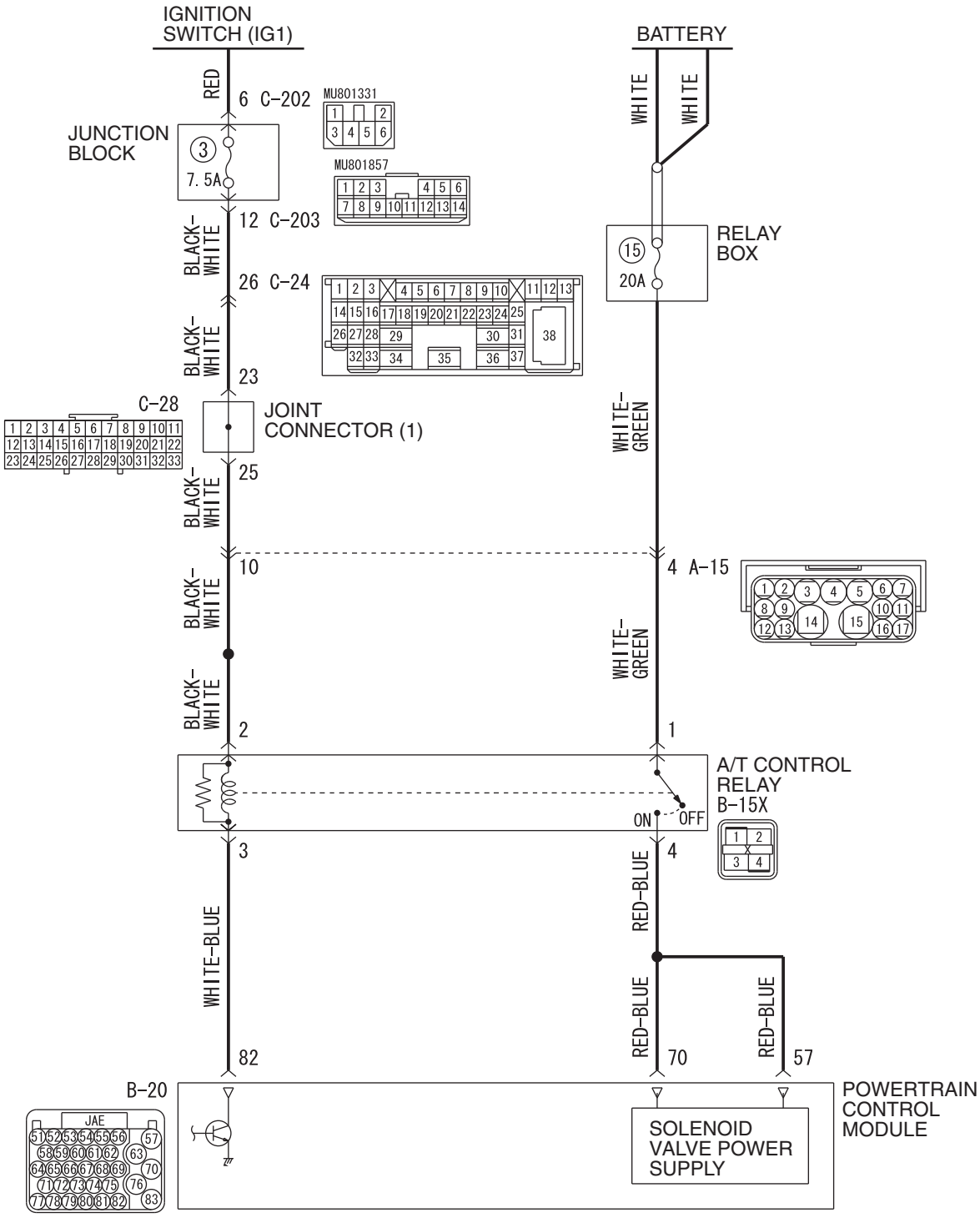

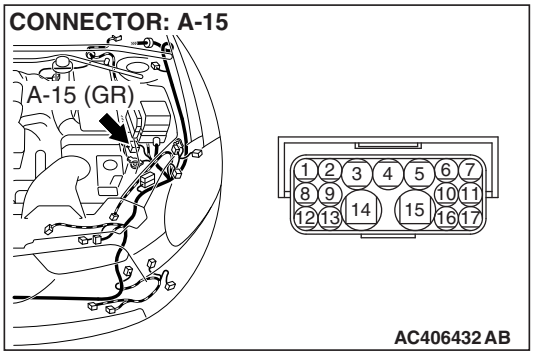
CONNECTOR: A-15
A-15 (GR)
1 2 3 4 5 6 7
8 9 10 11
12 13 14 15 16 17
AC406432 AB

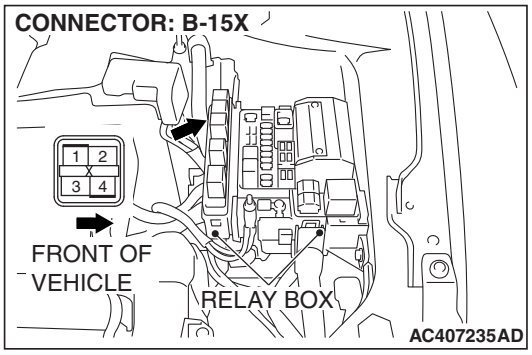
CONNECTOR: B-15X
1 2
3 4
FRONT OF VEHICLE
RELAY BOX
AC407235 AD

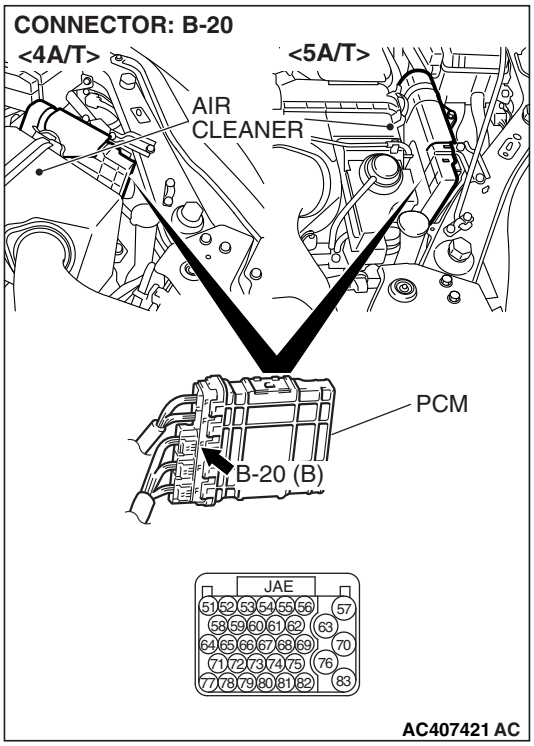
CONNECTOR: B-20
<4A/T>
<5A/T>
AIR CLEANER
PCM
B-20 (B)
JAE
51 52 53 54 55 56 57
58 59 60 61 62 63
64 65 66 67 68 69 70
71 72 73 74 75 76
77 78 79 80 81 82 83
AC407421 AC

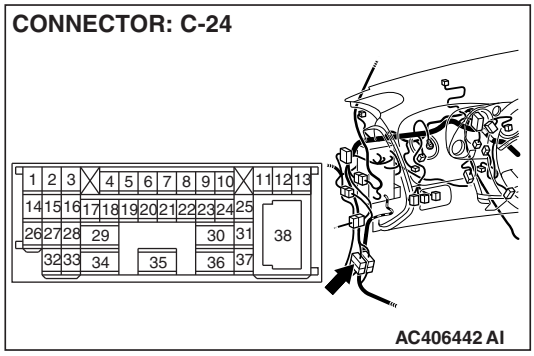
CONNECTOR: C-24
1 2 3 4 5 6 7 8 9 10 11 12 13
14 15 16 17 18 19 20 21 22 23 24 25
26 27 28 29 30 31 38
32 33 34 35 36 37
AC406442 AI

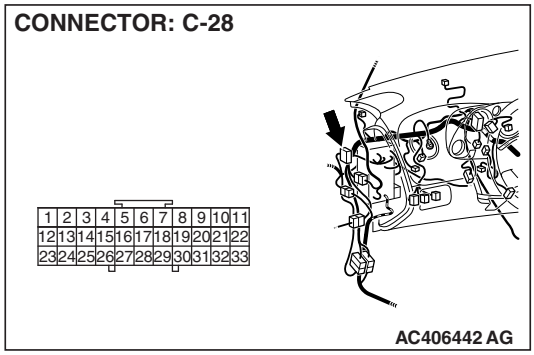
CONNECTOR: C-28
1 2 3 4 5 6 7 8 9 10 11
12 13 14 15 16 17 18 19 20 21 22
23 24 25 26 27 28 29 30 31 32 33
AC406442 AG

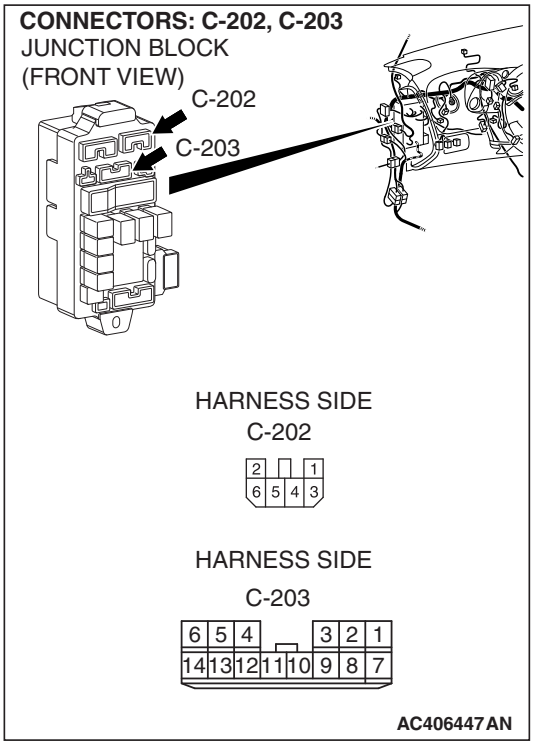

CIRCUIT OPERATION

- A/T control relay (terminal 1) receives the battery positive voltage through a dedicated 20 amp fuse.
- When the ignition switch is turned to the "ON" position, the PCM (terminal 82) receives battery voltage from the ignition switch. The PCM (terminal 82) applies voltage to energize the A/T control relay (terminal 3). With the A/T control relay energized, system voltage is applied to the PCM (terminals 70 and 57).

DESCRIPTIONS OF MONITOR METHODS

- If relay output voltage is below specified value, PCM judges that A/T control relay has a failure.

MONITOR EXECUTION

- Continuous

MONITOR EXECUTION CONDITIONS (OTHER MONITOR AND SENSOR)

Other Monitor (There is no temporary DTC stored in memory for the item monitored below)

- DTC P1779 (P0731): 1st gear incorrect ratio
- DTC P1780 (P0732): 2nd gear incorrect ratio
- DTC P1781 (P0733): 3rd gear incorrect ratio
- DTC P1782 (P0734): 4th gear incorrect ratio
- DTC P1783 (P0735): 5th gear incorrect ratio <5A/T>
- DTC P1784 (P0736): Reverse gear incorrect ratio
- DTC P1778 (P0743): Torque converter clutch solenoid malfunction
- DTC P1773 (P0753): Low-reverse solenoid malfunction
- DTC P1774 (P0758): Underdrive solenoid malfunction
- DTC P1775 (P0763): Second solenoid malfunction
- DTC P1776 (P0768): Overdrive solenoid malfunction
- DTC P1777 (P0773): Reduction solenoid malfunction <5A/T>

Sensor (The sensor below is determined to be normal)

- Torque converter clutch solenoid
- Low-reverse solenoid
- Underdrive solenoid
- Second solenoid
- Overdrive solenoid
- Reduction solenoid <5A/T>

LOGIC FLOW CHARTS (Monitor Sequence)

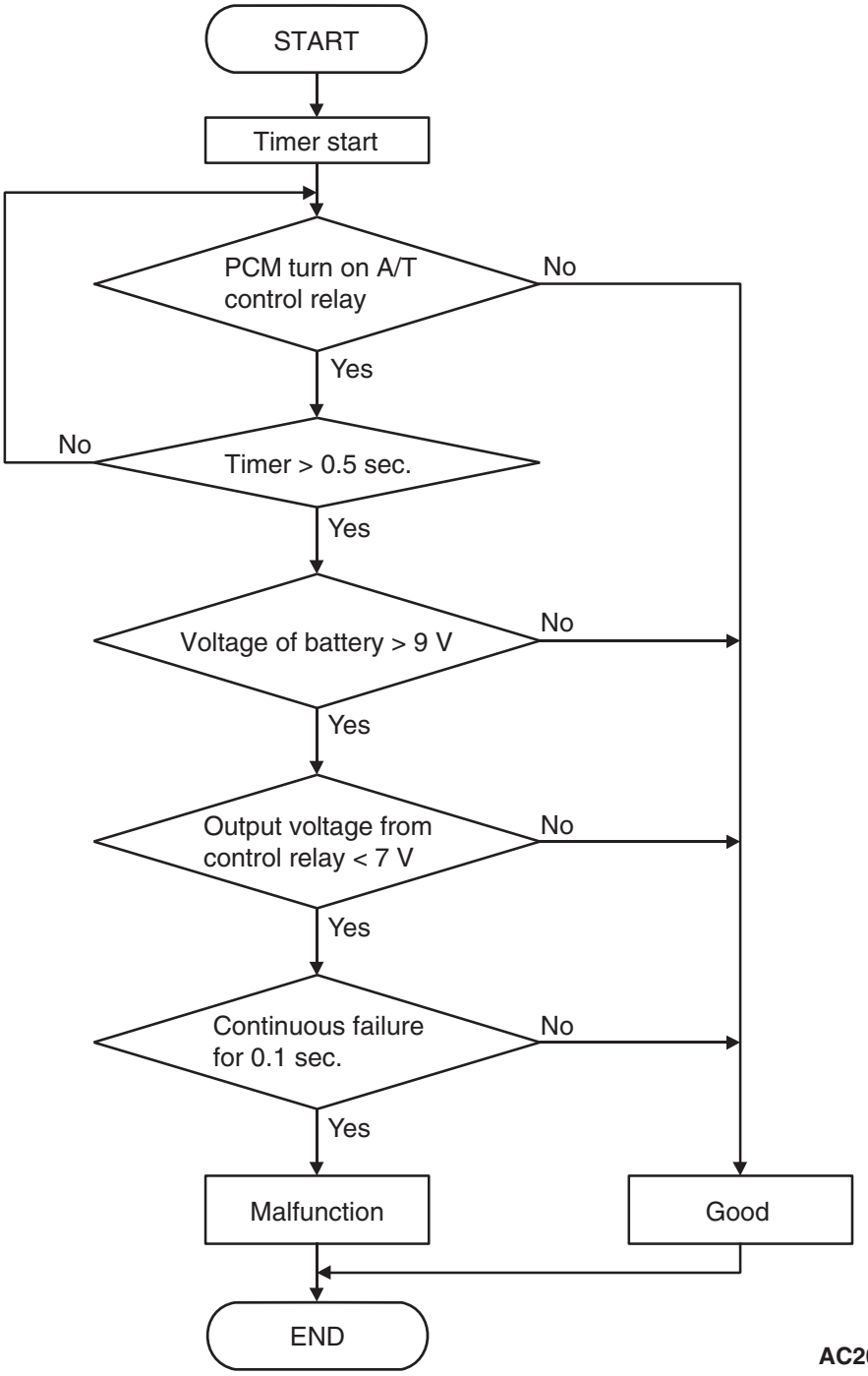

DTC SET CONDITIONS

Check Conditions

- Voltage of battery: 9 volts or more.
- Time after PCM turns on A/T control relay: 0.5 second or more.

Judgement Criteria

- A/T control relay output voltage: 7 volts or less. (0.1 second)
- If DTC P1788 (P1751) is set consecutively four times, the transaxle is locked into 3rd gear as a fail-safe measure, and the selector lever position indicator light (D, 1 through 4 or 5) flashes once per second.

OBD-II DRIVE CYCLE PATTERN

Start the engine, and keep the vehicle stopped in "P" range for 5 seconds.

TROUBLESHOOTING HINTS (THE MOST LIKELY CAUSES FOR THIS CODE TO BE SET ARE:)

- Malfunction of the A/T control relay
- Damaged harness or connector
- Malfunction of the PCM

DIAGNOSIS

Required Special Tools:

- MB991958: Scan Tool (M.U.T.-III Sub Assembly)
  - MB991824: V.C.I.
  - MB991827: M.U.T.-III USB Cable
  - MB991910: M.U.T.-III Main Harness A

STEP 1. Using scan tool MB991958, check data list item 8: A/T Control Relay Output Voltage.

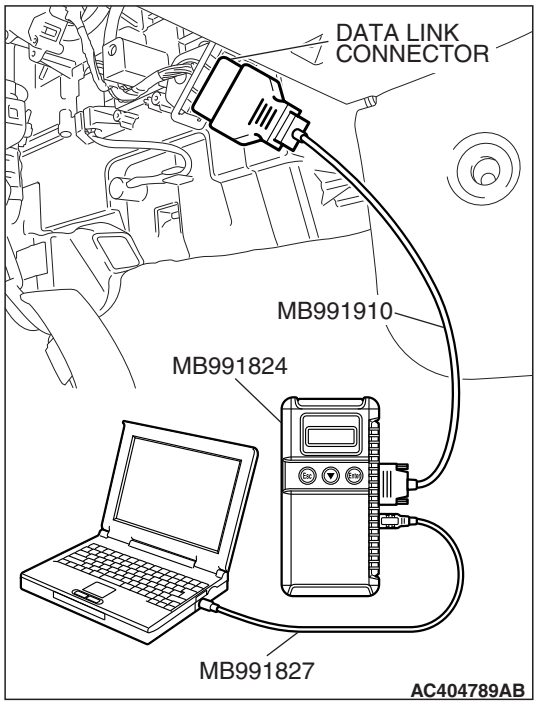

⚠ CAUTION

To prevent damage to scan tool MB991958, always turn the ignition switch to the "LOCK" (OFF) position before connecting or disconnecting scan tool MB991958.

(1) Connect scan tool MB991958 to the data link connector.
(2) Turn the ignition switch to the "ON" position.
(3) Set scan tool MB991958 to the data reading mode.
  - Item 8: A/T Control Relay Output Voltage.
    - The voltage should equal battery positive voltage.

(4) Turn the ignition switch to the "LOCK" (OFF) position.

Q: Does the measured voltage equal battery positive voltage?

YES : It can be assumed that this malfunction is intermittent. Refer to GROUP 00, How to Use Troubleshooting/Inspection Service Points – How to Cope with Intermittent Malfunction P.00-14.

NO : Go to Step 2.

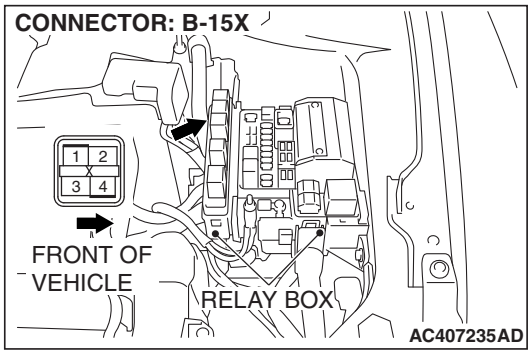

STEP 2. Check the A/T control relay.

(1) Remove the A/T control relay from the engine component relay box connector B-15X.

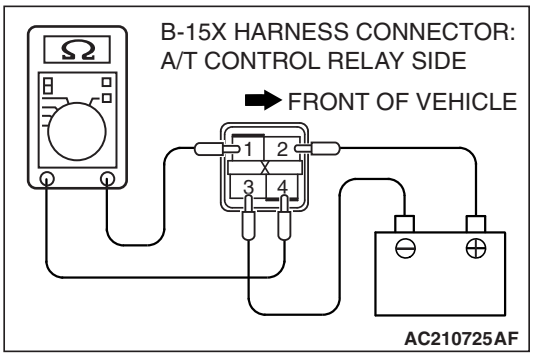

(2) Using jumper wires, connect terminal 2 to the positive battery terminal, and terminal 3 to the negative battery terminal.

(3) Measure the resistance between terminals 1 and 4 of the A/T control relay.
- The resistance should be measured less than 2 ohms.
- Disconnect the jumper wires. The resistance between terminals 1 and 4 should measure over limits (open circuit).

Q: Is the measured resistance less than 2 ohms when the relay is energized, and open circuit when the relay is de-energized?

YES : Go to Step 3.

NO : Replace the A/T control relay.

STEP 3. Check A/T control relay socket B-15X in the engine compartment relay box for loose, corroded or damaged terminals, or terminals pushed back in the socket.

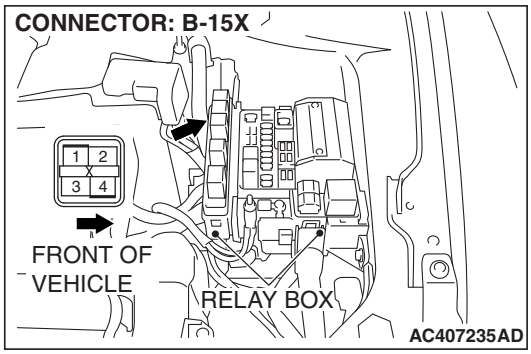

Q: Is the relay connector in good condition?

YES : Go to Step 4.

NO : Repair or replace the damaged components. Refer to GROUP 00E, Harness Connector Inspection P.00E-2.

STEP 4. Measure the supply voltage at A/T control relay connector B-15X in the engine component relay box.

(1) Disconnect the A/T control relay.

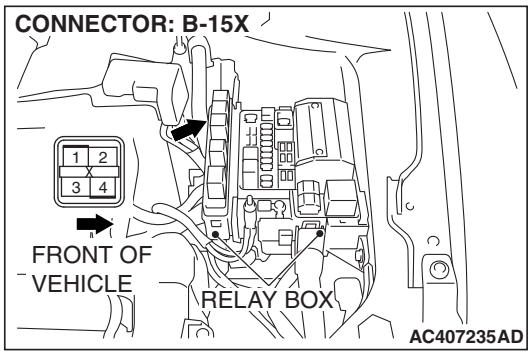

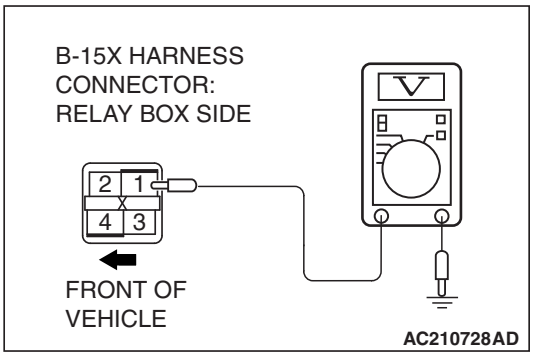

(2) Measure the voltage between terminal 1 and ground.
- The measured voltage should equal battery positive voltage.

Q: Is the measured voltage equal to battery positive voltage?

YES : Go to Step 7.
NO : Go to Step 5.

STEP 5. Check intermediate connector A-15 for loose, corroded or damaged terminals, or terminals pushed back in the connector.

Q: Are the connector and terminals in good condition?

YES : Go to Step 6.
NO : Repair or replace the damaged components. Refer to GROUP 00E, Harness Connector Inspection P.00E-2.

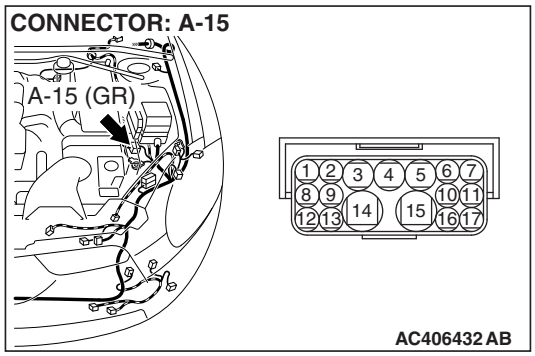

STEP 6. Check the harness for open circuit or short circuit to ground between A/T control relay connector B-15X terminal 1 in the engine component relay box and battery.

Q: Is the harness wire in good condition?

YES : Go to Step 15.
NO : Repair or replace the harness wire.

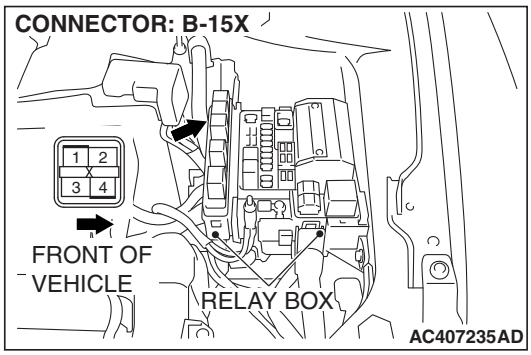

STEP 7. Measure the supply voltage at A/T control relay connector B-15X in the engine component relay box.

(1) Disconnect the A/T control relay.
(2) Turn the ignition switch to the "ON" position.

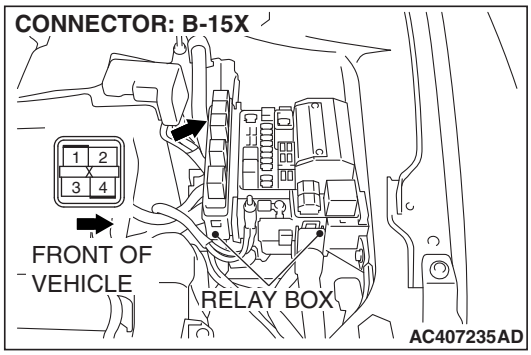

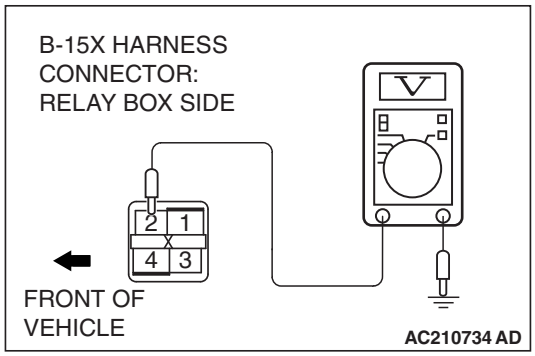

(3) Measure the voltage between terminal 2 and ground.
- The measured voltage should equal battery positive voltage.

(4) Turn the ignition switch to the "LOCK" (OFF) position.

Q: Is the measured voltage equal to battery positive voltage?

YES : Go to Step 10.
NO : Go to Step 8.

STEP 8. Check intermediate connector A-15, C-24, joint connector (1) C-28 and junction block connector C-203 for loose, corroded or damaged terminals, or terminals pushed back in the connector.

Q: Are the connectors in good condition?

YES : Go to Step 9.

NO : Repair or replace the damaged components. Refer to GROUP 00E, Harness Connector Inspection P.00E-2.

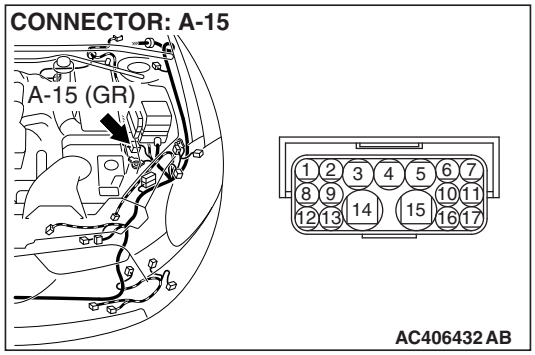

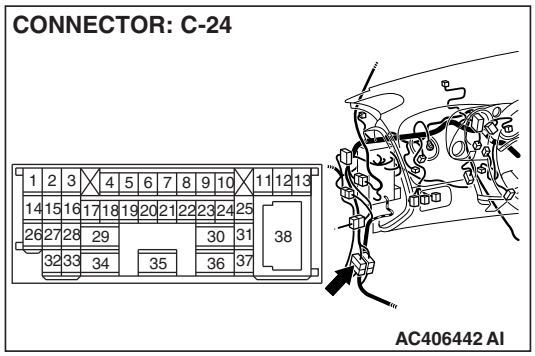

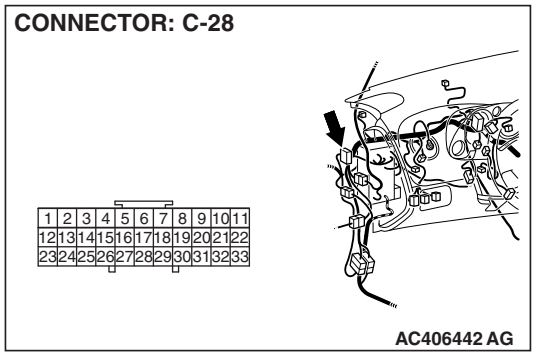

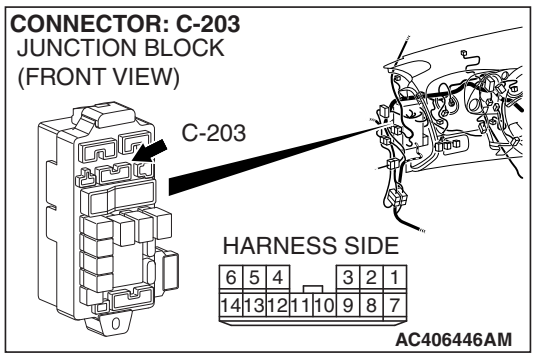

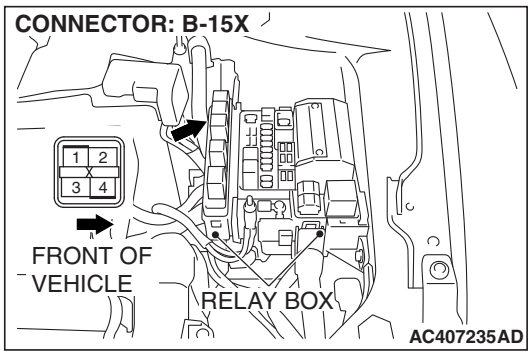

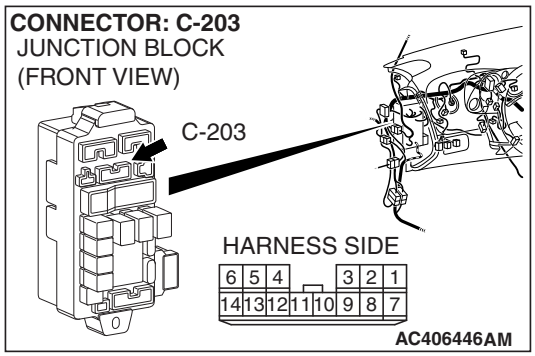

STEP 9. Check the harness for open circuit or short circuit to ground between A/T control relay connector B-15X terminal 2 in the engine component relay box and junction block connector C-203 terminal 12.

Q: Is the harness wire in good condition?

YES : Go to Step 15.

NO : Repair or replace the harness wire.

STEP 10. Measure the A/T control relay output voltage at PCM connector B-20 by using check harness special tool MB991923.

(1) Disconnect all the connectors from the PCM.

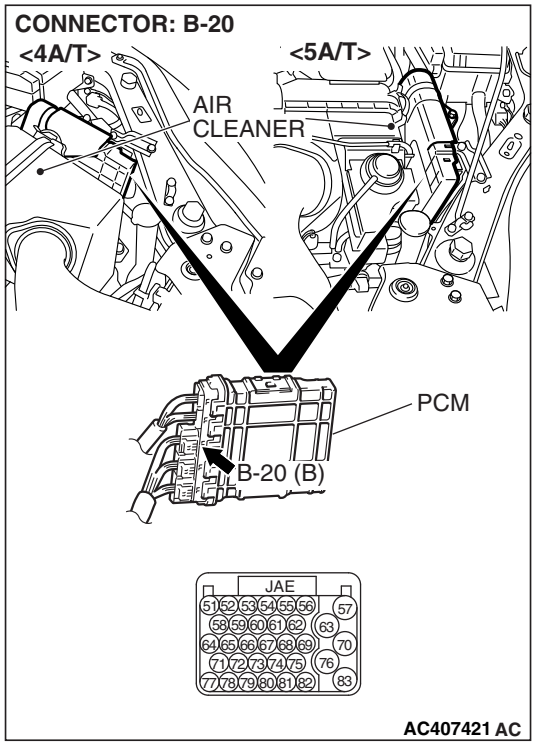

(2) Connect special tool MB991923 (check harness) between the PCM and the body-side harness connector.
(3) Turn the ignition switch to the "ON" position.

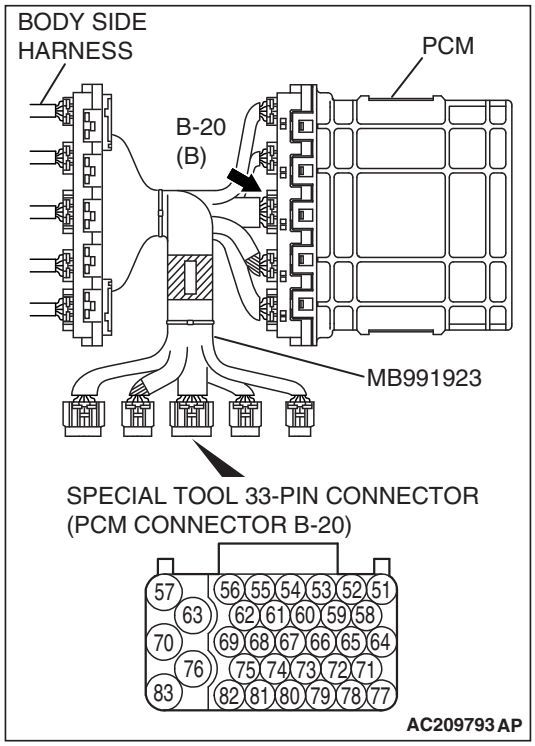

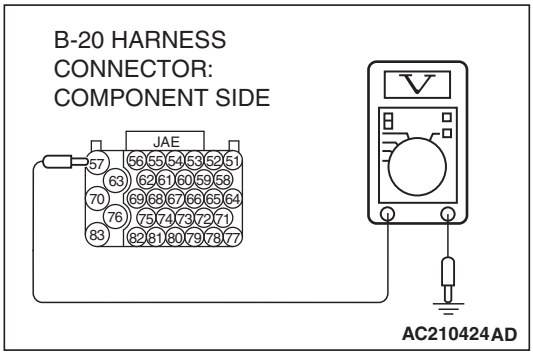

(4) Measure the voltage between terminal 57 and ground.
- The measured voltage should equal battery positive voltage.

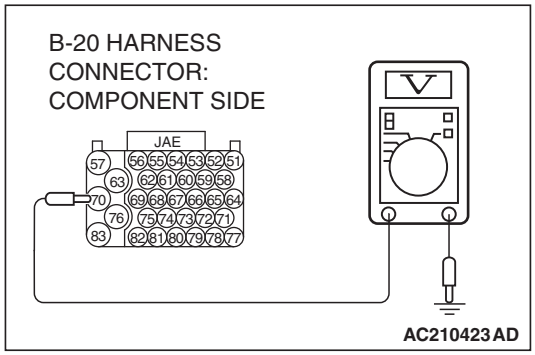

(5) Measure the voltage between terminal 70 and ground.
- The measured voltage should equal battery positive voltage.

(6) Turn the ignition switch to the "LOCK" (OFF) position.

Q: Is the measured voltage equal to battery positive voltage between terminal 57 and ground, and between terminal 70 and ground?

YES : Go to Step 13.
NO : Go to Step 11.

STEP 11. Check PCM connector B-20 for loose, corroded or damaged terminals, or terminals pushed back in the connector.

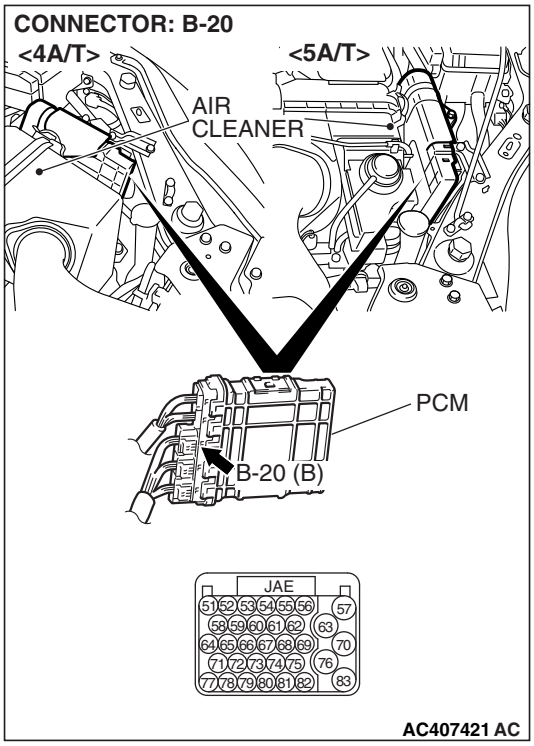

Q: Are the connector and terminals in good condition?

YES : Go to Step 12.
NO : Repair or replace the damaged components. Refer to GROUP 00E, Harness Connector Inspection P.00E-2.

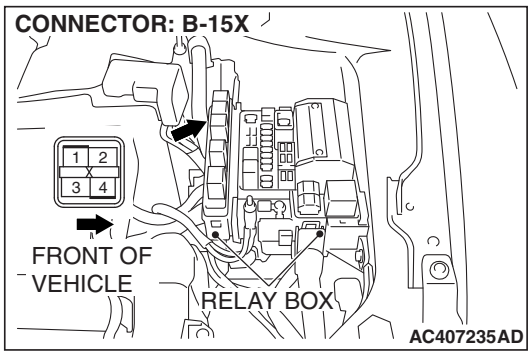

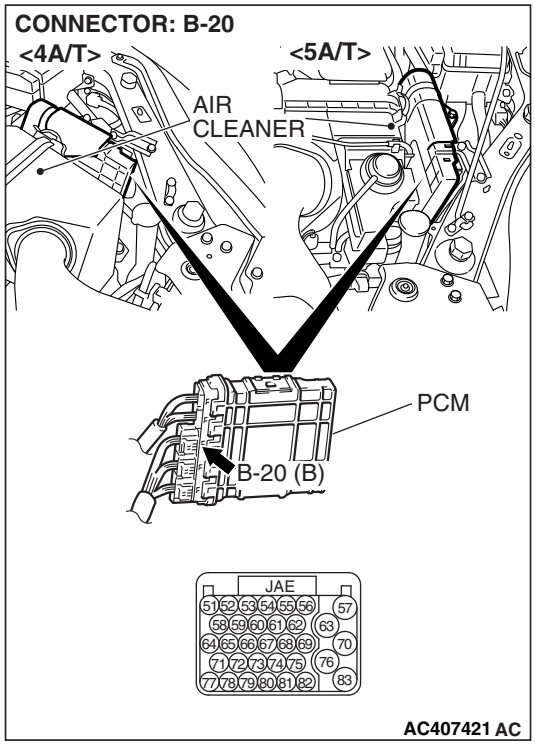

STEP 12. Check harness for open circuit or short circuit to ground between A/T control relay connector B-15X (terminal 4) in the engine component relay box and PCM connector B-20 (terminals 57 and 70).

Q: Is the harness wire in good condition?

YES : Go to Step 15.

NO : Repair or replace the harness wire.

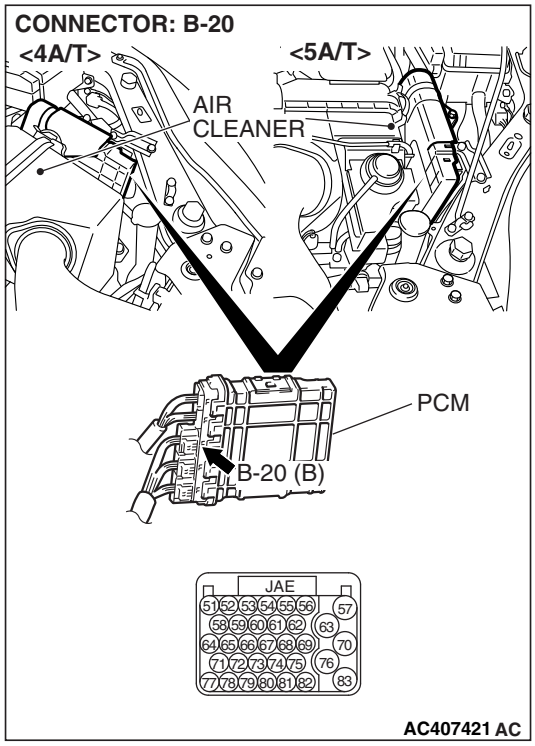

STEP 13. Check PCM connector B-20 for loose, corroded or damaged terminals, or terminals pushed back in the connector.

Q: Are the connector and terminals in good condition?

YES : Go to Step 14.

NO : Repair or replace the damaged components. Refer to GROUP 00E, Harness Connector Inspection P.00E-2.

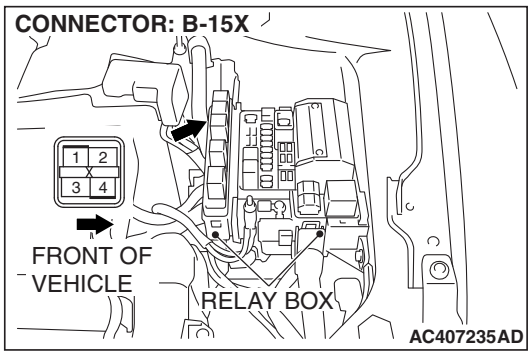

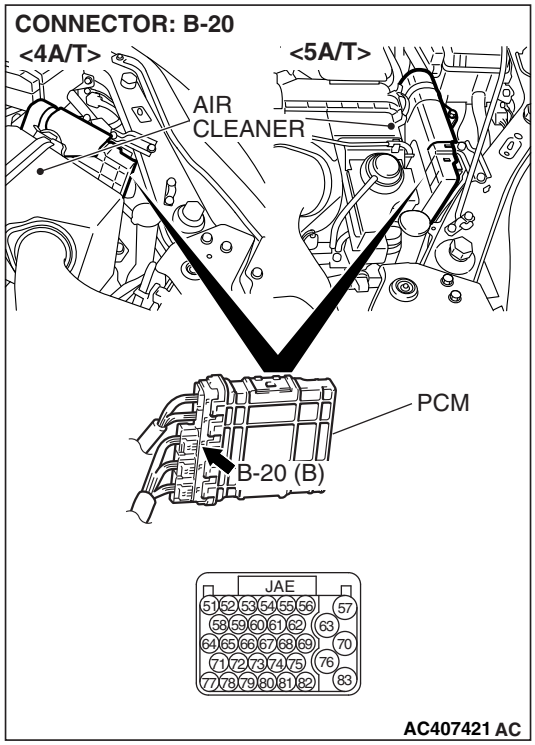

STEP 14. Check harness for open circuit or short circuit to ground between A/T control relay connector B-15X terminal 3 in the engine component relay box and PCM connector B-20 terminal 82.

Q: Is the harness wire in good condition?

YES : Go to Step 15.

NO : Repair or replace the harness wire.

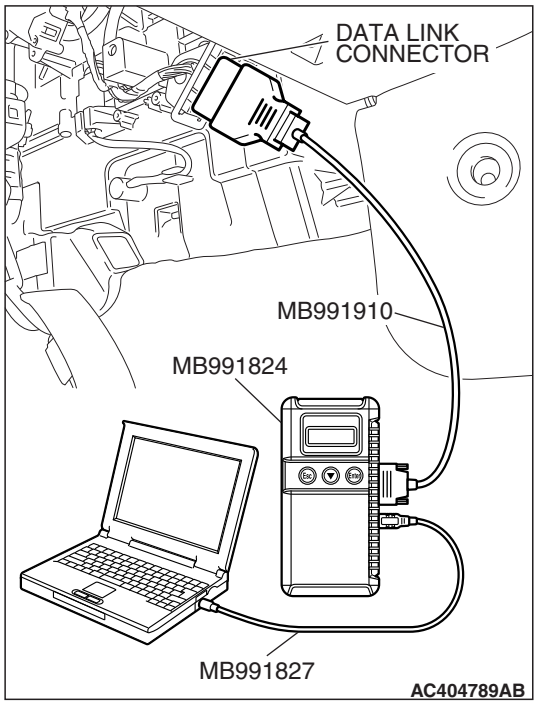

STEP 15. Using scan tool MB991958, check data list item 8: A/T control relay output voltage.

⚠ CAUTION

To prevent damage to scan tool MB991958, always turn the ignition switch to the "LOCK" (OFF) position before connecting or disconnecting scan tool MB991958.

(1) Connect scan tool MB991958 to the data link connector.
(2) Turn the ignition switch to the "ON" position.
(3) Set scan tool MB991958 to the data reading mode.
- Item 8: A/T Control Relay Output Voltage.
  - The voltage should equal battery positive voltage.

(4) Turn the ignition switch to the "LOCK" (OFF) position.

Q: Is the measured voltage equal battery positive voltage?

YES : It can be that this malfunction is intermittent. Refer to GROUP 00, How to Use Troubleshooting/Inspection Service Points – How to Cope with Intermittent Malfunction P.00-14.

NO : Replace the PCM. When the PCM is replaced, register the encrypted code. Refer to GROUP 54A, Encrypted Code Registration Criteria Table P.54A-19.

SYMPTOM PROCEDURES

INSPECTION PROCEDURE 1: Engine does not Start

COMMENT

If the engine does not crank when the selector lever is placed in the "P" or "N" position, the cause is probably a malfunction of the transmission range switch system, transaxle control cable assembly, engine system, torque converter or transaxle oil pump.

TROUBLESHOOTING HINTS (THE MOST LIKELY CAUSES FOR THIS CONDITION:)

- Malfunction of the transmission range switch
- Malfunction of the transaxle control cable assembly
- Malfunction of the engine system
- Malfunction of the torque converter
- Malfunction of the transaxle oil pump
- Malfunction of the PCM

DIAGNOSIS

Required Special Tools:

- MB991958: Scan Tool (M.U.T.-III Sub Assembly)
  - MB991824: V.C.I.
  - MB991827: M.U.T.-III USB Cable
  - MB991910: M.U.T.-III Main Harness A

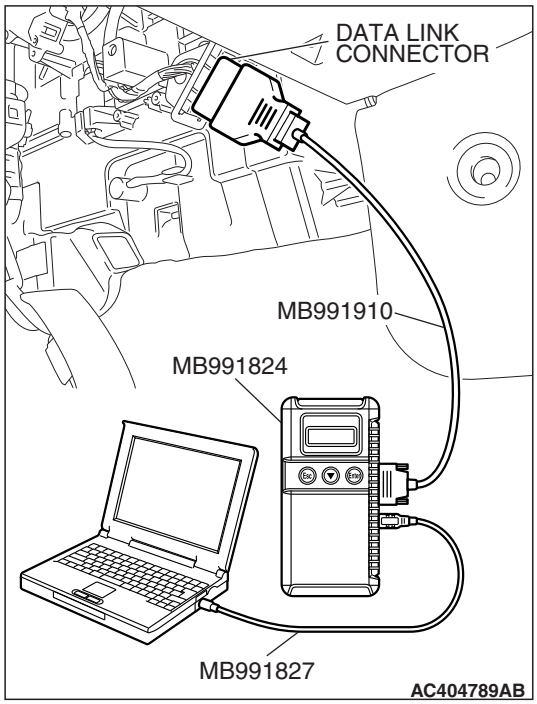

STEP 1. Using scan tool MB991958, read the A/T diagnostic trouble code.

⚠ CAUTION

To prevent damage to scan tool MB991958, always turn the ignition switch to the "LOCK" (OFF) position before connecting or disconnecting scan tool MB991958.

(1) Connect scan tool MB991958 to the data link connector.
(2) Turn the ignition switch to the "ON" position.
(3) Check for A/T diagnostic trouble code.
(4) Turn the ignition switch to the "LOCK" (OFF) position.

Q: Is A/T DTC P1770 (P0705) or P1771 (P0705) set?

YES <DTC P1770 (P0705) set> : Refer to P.23A-143, DTC P1770 (P0705): Transmission Range Switch System (Open Circuit).

YES <DTC P1771 (P0705) set> : Refer to P.23A-172, DTC P1771 (P0705): Transmission Range Switch System (Short Circuit).

NO : Go to Step 2.

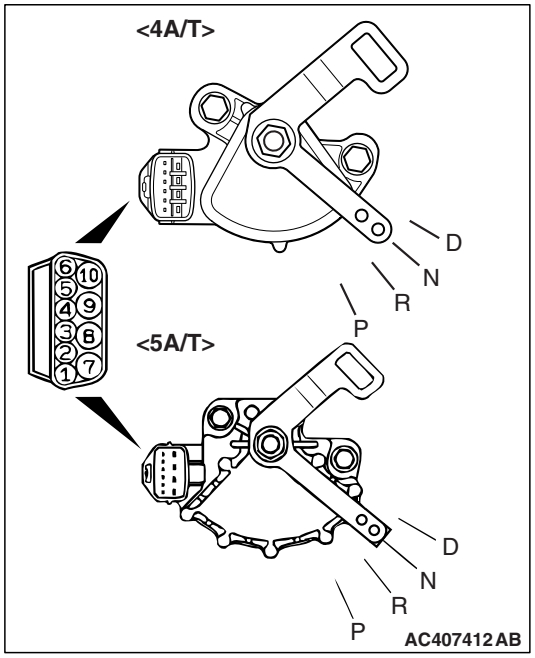

STEP 2. Check the transaxle control cable assembly.

Move the selector lever to each position. The manual control lever position of the transmission range switch should match the transmission range.

Q: Is the manual control lever position correct?

YES : Go to Step 3.

NO : Repair the transaxle control cable. Refer to P.23A-396, Transmission Range Switch and Control Cable Adjustment. Retest the system to verify the repair.

STEP 3. Check the engine.

Refer to GROUP 13A <2.4L Engine>, Diagnosis – Trouble Symptom Chart – Starting P.13A-46.
Refer to GROUP 13B <3.8L Engine>, Diagnosis – Trouble Symptom Chart – Starting P.13B-49.

Q: Is the inspection result good?

YES : Go to Step 4.
NO : Repair or replace the appropriate engine components.

STEP 4. Check the torque converter.

(1) Remove the starter.
(2) Turn the torque converter and check for a binding or sticking condition. Check the ring gear for damaged or missing teeth.

NOTE: Since the torque converter drives the oil pump, turning the torque converter also checks for a binding oil pump. If either of these components are damaged, the transaxle will need to be removed for inspection.

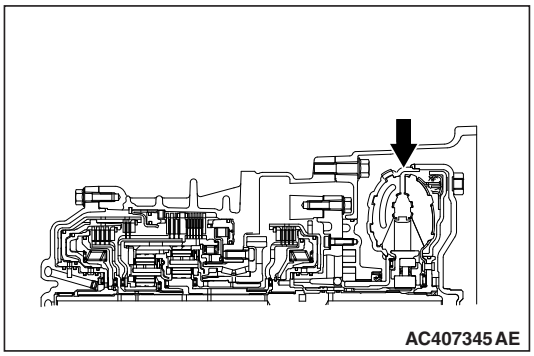
AC407345 AE

Q: Does the torque converter turn freely without any missing or damaged teeth?

YES : Go to Step 5.
NO : Replace the torque converter. Refer to GROUP 23B, Transaxle P.23B-8 <4A/T> or Refer to GROUP 23C, Transaxle P.23C-8 <5A/T>.

STEP 5. Repair or replace the starter.

Q: Is the symptom eliminated?

YES : The procedure is complete.
NO : Go to Step 6.

STEP 6. Check the oil pump.

(1) Remove the transaxle assembly.
(2) Check the oil pump (incorrect installation, damage and etc.) and replace the oil pump assembly if necessary (The oil pump cannot be disassembly).Refer to GROUP 23B, Transaxle P.23B-8 <4A/T> or Refer to GROUP 23C, Transaxle P.23C-8 <5A/T>. Confirm that the malfunction symptom is eliminated.

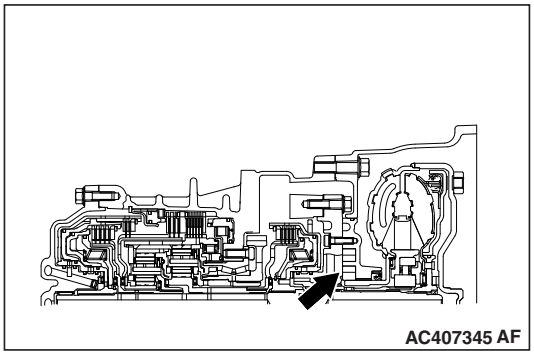
AC407345 AF

Q: Is the symptom eliminated?

YES : The procedure is complete.
NO : Go to Step 7.

STEP 7. Replace the PCM.
When the PCM is replaced, register the encrypted code. Refer to GROUP 54A, Encrypted Code Registration Criteria Table P.54A-19.

Q: Does the engine crank when the selector lever is placed in the "P" or "N" position?

YES : The procedure is complete.
NO : Start over at Step 1.

INSPECTION PROCEDURE 2: Does not Move Forward

COMMENT

If the engine is idling and the selector lever is shifted from "N" to "D" range and the vehicle does not drive forward then the cause is due to line pressure defect, under drive clutch or valve body malfunction.

TROUBLESHOOTING HINTS (THE MOST LIKELY CAUSES FOR THIS CONDITION:)

- Abnormal line pressure
- Malfunction of the underdrive solenoid valve
- Malfunction of the underdrive clutch
- Malfunction of the oil pump
- Malfunction of the valve body
- Malfunction of the PCM

DIAGNOSIS

Required Special Tools:

- MB991958: Scan Tool (M.U.T.-III Sub Assembly)
  - MB991824: V.C.I.
  - MB991827: M.U.T.-III USB Cable
  - MB991910: M.U.T.-III Main Harness A

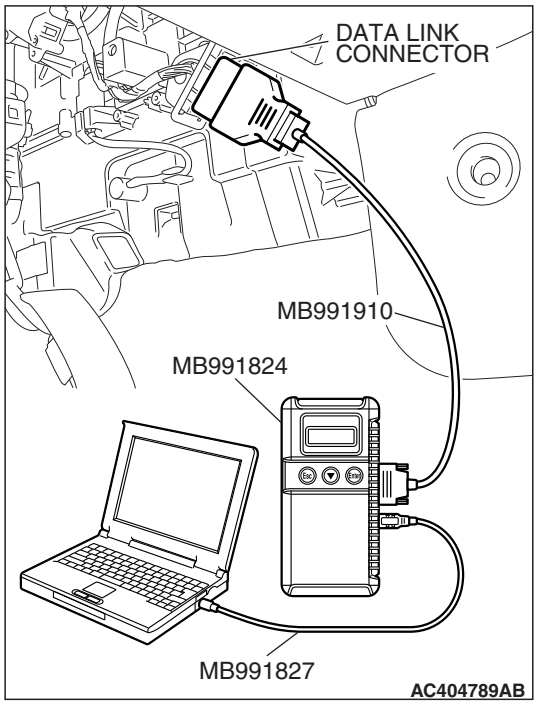

STEP 1. Using scan tool MB991958, check actuator test item 2: Underdrive Solenoid Valve.

⚠ CAUTION

To prevent damage to scan tool MB991958, always turn the ignition switch to the "LOCK" (OFF) position before connecting or disconnecting scan tool MB991958.

(1) Connect scan tool MB991958 to the data link connector.
(2) Turn the ignition switch to the "ON" position.
(3) Set scan tool MB991958 to the actuator test mode.
- Item 2: Underdrive Solenoid Valve.
  - An audible clicking or buzzing should be heard when the underdrive solenoid valve is energized.

(4) Turn the ignition switch to the "LOCK" (OFF) position.

Q: Is the solenoid valve operating properly?

YES : Go to Step 2.
NO : Replace the torque converter. Refer to GROUP 23B, Transaxle P.23B-8 <4A/T> or Refer to GROUP 23C, Transaxle P.23C-8 <5A/T>.

STEP 2. Check the hydraulic pressure.

Shift the selector lever to the sport mode then measure the hydraulic pressure of each element in 1st speed to check and see if each respective hydraulic pressure is within the range of standard pressure. Refer to P.23A-37, Hydraulic Pressure Test.

Q: Is the hydraulic pressure within the standard value?

YES : Go to Step 3.
NO : Go to Step 4.

STEP 3. Check the underdrive clutch system.

(1) Remove the valve body cover and valve body. Refer to GROUP 23B, Transaxle P.23B-8 <4A/T> or Refer to GROUP 23C, Transaxle P.23C-8 <5A/T>.
(2) Blow 108 kPa (15psi) compressed air into the underdrive clutch oil orifice of the transaxle case, and check if the underdrive clutch piston moves and air pressure is maintained in that condition.

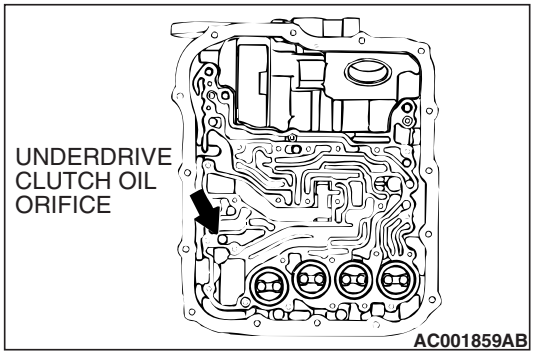

Q: Is the air pressure maintained?

YES : Go to Step 4.
NO : Go to Step 6.

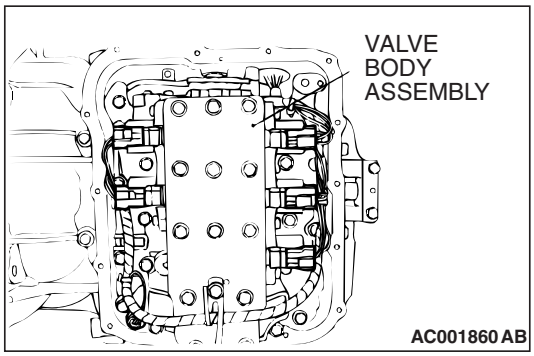

STEP 4. Disassemble and clean the valve body.

Check the O-ring installation bolts for looseness and valve body for damage. Repair or replace the faulty parts. Refer to GROUP 23B, Valve Body P.23B-65 <4A/T> or Refer to GROUP 23C, Valve Body P.23C-73 <5A/T>.

Replace the valve body assembly if the damage is too extensive. Then check the symptom.

Q: Is the symptom eliminated?

YES : The procedure is complete.

NO : Go to Step 5.

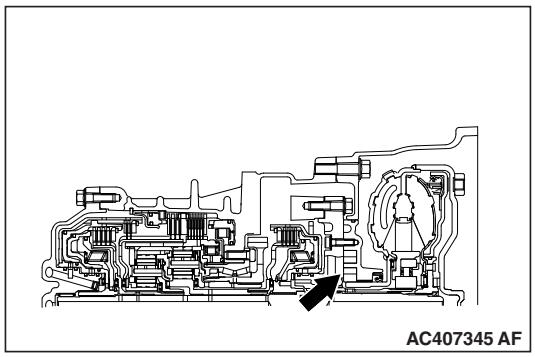

STEP 5. Check the oil pump.

(1) Remove the transaxle assembly.

(2) Check the oil pump (incorrect installation, damage and etc.) and replace the oil pump assembly if necessary (The oil pump cannot be disassembled). Refer to GROUP 23B, Transaxle P.23B-8 <4A/T> or Refer to GROUP 23C, Transaxle P.23C-8 <5A/T>. Then check the symptom.

Q: Is the symptom eliminated?

YES : The procedure is complete.

NO : Go to Step 7.

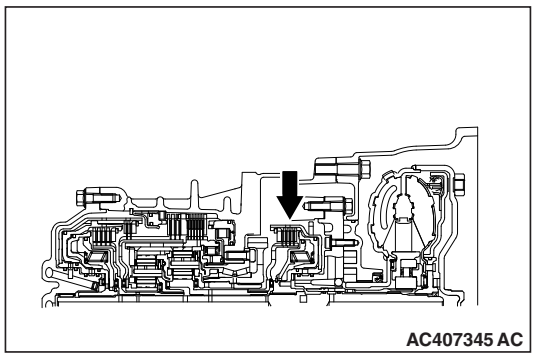

STEP 6. Check the underdrive clutch.

(1) Remove the transaxle assembly.

(2) Check the facing for seizure and the piston seal ring for damage and interference with the retainer. Repair or replace the faulty parts. Refer to GROUP 23B, Underdrive Clutch and Input Shaft P.23B-48 <4A/T> or Refer to GROUP 23C, Underdrive Clutch and Input Shaft P.23C-52 <5A/T>. Then check the symptom.

Q: Is the symptom eliminated?

YES : The procedure is complete.

NO : Go to Step 7.

STEP 7. Replace the PCM.

When the PCM is replaced, register the encrypted code. Refer to GROUP 54A, Encrypted Code Registration Criteria Table P.54A-19.

Q: Is the symptom eliminated?

YES : The procedure is complete.

NO : Start over at Step 1.

INSPECTION PROCEDURE 3: Does not Move Backward

COMMENT

If the vehicle does not move backward when the selector lever is shifted from "N" to "R" range while the engine is idling, the cause is probably abnormal pressure or a malfunction of the reverse clutch, low-reverse brake, or valve body.

TROUBLESHOOTING HINTS (THE MOST LIKELY CAUSES FOR THIS CONDITION:)

- Abnormal reverse clutch pressure
- Abnormal low-reverse brake pressure
- Malfunction of the low-reverse solenoid valve
- Malfunction of the reverse clutch
- Malfunction of the low-reverse brake
- Malfunction of the valve body
- Malfunction of the PCM

DIAGNOSIS

Required Special Tools:

- MB991958: Scan Tool (M.U.T.-III Sub Assembly)
  - MB991824: V.C.I.
  - MB991827: M.U.T.-III USB Cable
  - MB991910: M.U.T.-III Main Harness A

STEP 1. Using scan tool MB991958, check actuator test item 1: Low-Reverse Solenoid Valve.

⚠ CAUTION

To prevent damage to scan tool MB991958, always turn the ignition switch to the "LOCK" (OFF) position before connecting or disconnecting scan tool MB991958.

(1) Connect scan tool MB991958 to the data link connector.
(2) Turn the ignition switch to the "ON" position.
(3) Set scan tool MB991958 to the actuator test mode.
- Item 1: Low-Reverse Solenoid Valve.
  - An audible clicking or buzzing should be heard when the low-reverse solenoid valve is energized.

(4) Turn the ignition switch to the "LOCK" (OFF) position.

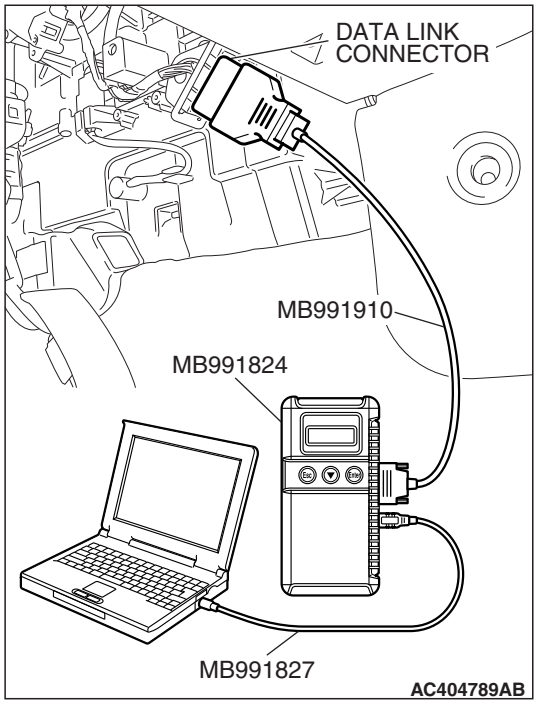

Q: Is the solenoid valve operating properly?

YES : Go to Step 2.
NO : Repair or replace the low-reverse solenoid valve. Refer to GROUP 23B, Valve Body P.23B-65 <4A/T> or Refer to GROUP 23C, Valve Body P.23C-73 <5A/T>. Then confirm that the symptom is eliminated.

STEP 2. Check the hydraulic pressure (for reverse clutch).

Measure the hydraulic pressure for the reverse clutch when the selector lever is at the "R" range, and check if the hydraulic pressure is within the standard value. Refer to P.23A-37, Hydraulic Pressure Test.

Q: Is the hydraulic pressure within the standard value?

YES : Go to Step 3.
NO : Go to Step 5.

STEP 3. Check the hydraulic pressure (for low-reverse brake).

Measure the hydraulic pressure for the low-reverse brake when the selector lever is at the "R" range, and check if the hydraulic pressure is within the standard value. Refer to P.23A-37, Hydraulic Pressure Test.

Q: Is the hydraulic pressure within the standard value?

YES : Go to Step 4.
NO : Go to Step 5.

STEP 4. Check the reverse clutch system and low-reverse brake system.

(1) Remove the valve body cover and valve body. Refer to GROUP 23B, Transaxle P.23B-8 <4A/T> or Refer to GROUP 23C, Transaxle P.23C-8 <5A/T>.
(2) Blow 108 kPa (15psi) compressed air into the reverse clutch oil orifice of the transaxle case. Then check if the reverse clutch piston moves and air pressures are maintained in that condition. Repeat for the low-reverse brake.

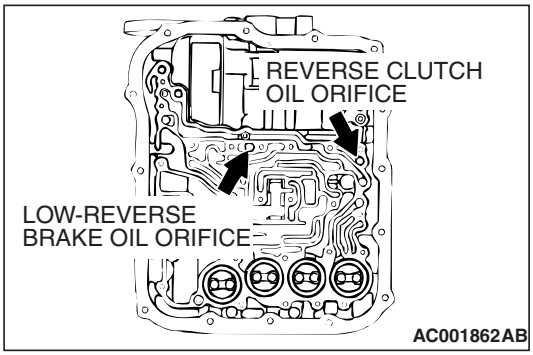

Q: Are the reverse clutch, low-reverse brake or both air pressures maintained?

YES : Go to Step 5.
NO : Go to Step 6.

STEP 5. Disassemble and clean the valve body.

Check the O-ring installation bolts for looseness and valve body for damage. Repair or replace the faulty parts. Refer to GROUP 23B, Valve Body P.23B-65 <4A/T> or Refer to GROUP 23C, Valve Body P.23C-73 <5A/T>.
Replace the valve body assembly if the damages are thought to be irreparable. Then check the symptom.

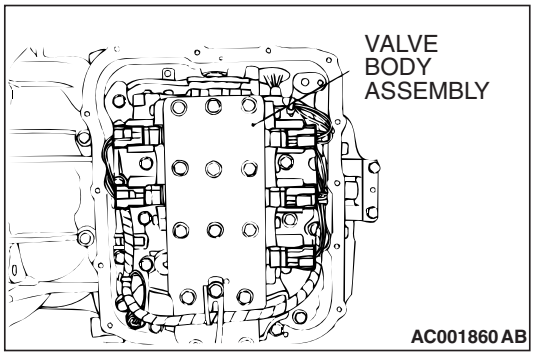

Q: Is the symptom eliminated?

YES : The procedure is complete.
NO : Go to Step 7.

STEP 6. Check the reverse clutch, low-reverse brake or both. Remove the transaxle.

Check the facing for seizure and the piston seal ring for damage and interference with the retainer. Repair or replace the faulty parts. Refer to GROUP 23B, Transaxle P.23B-8, Reverse and Overdrive Clutch P.23B-51 <4A/T> or Refer to GROUP 23C, Transaxle P.23C-8, Reverse and Overdrive Clutch P.23C-55 <5A/T>. Then check the symptom.

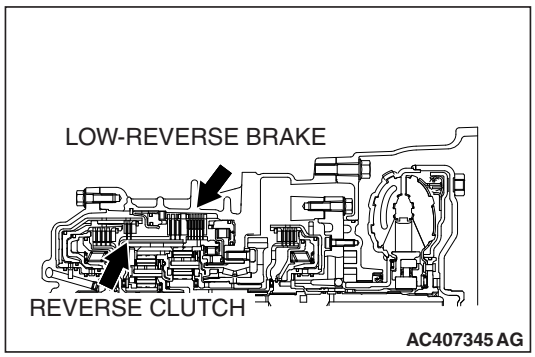

Q: Is the symptom eliminated?

YES : The procedure is complete.
NO : Go to Step 7.

STEP 7. Replace the PCM.
When the PCM is replaced, register the encrypted code. Refer to GROUP 54A, Encrypted Code Registration Criteria Table P.54A-19.

Q: Is the symptom eliminated?
YES : The procedure is complete.
NO : Start over at Step 1.

INSPECTION PROCEDURE 4: Does not Move (Forward or Backward)

COMMENT
If the vehicle does not move forward or backward when the selector lever is shifted to any position while the engine is idling, the cause is probably abnormal line pressure, or a malfunction of the powertrain, oil pump or valve body.

TROUBLESHOOTING HINTS (THE MOST LIKELY CAUSES FOR THIS CONDITION:)
- Abnormal line pressure
- Malfunction of the powertrain
- Malfunction of the oil pump
- Malfunction of the valve body
- Low transmission fluid level
- Malfunction of the PCM

DIAGNOSIS

STEP 1. Check the hydraulic pressure.
Measure the hydraulic pressure of each element when the transaxle is in 1st, 2nd or reverse. Check if each hydraulic pressure is within the standard value. Refer to P.23A-37, Hydraulic Pressure Test. If some elements pressures are within the standard value and some are not, recheck the symptom.

Q: Are all pressures within the standard value?
YES : Check transmission fluid level and condition. If not OK, repair or replace as necessary, then retest the system. If OK, go to Step 3.
NO : Go to Step 2.

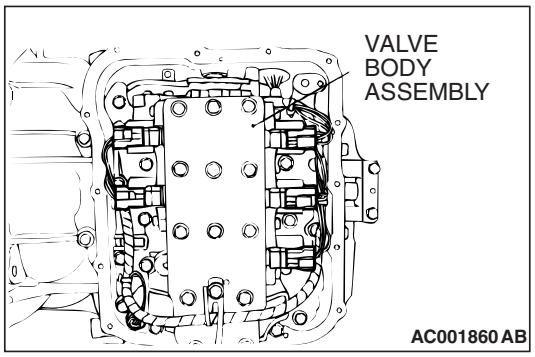

STEP 2. Disassemble and clean the valve body.
Check the O-ring installation bolts for looseness and valve body for damage. Repair or replace the faulty parts. Refer to GROUP 23B, Valve Body P.23B-65 <4A/T> or Refer to GROUP 23C, Valve Body P.23C-73 <5A/T>.
Replace the valve body assembly if the damage is too extensive. Then retest the symptom.

Q: Is the symptom eliminated?
YES : The procedure is complete.
NO : Go to Step 4.

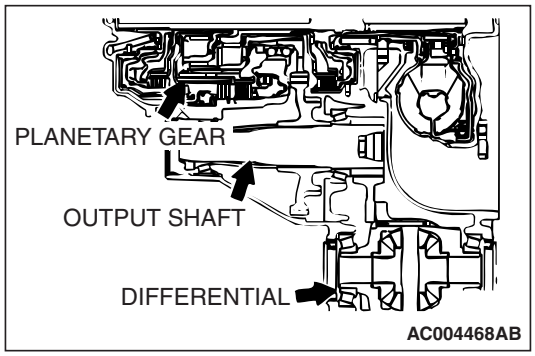

STEP 3. Check the transaxle powertrain components.

Disassemble the transaxle and check the planetary gear and output shaft, etc. Repair or replace the damaged parts. Refer to GROUP 23B, Transaxle P.23B-8, Planetary Gear P.23B-55, Output Shaft P.23B-59, Differential P.23B-62 <4A/T> or Refer to GROUP 23C, Transaxle P.23C-8, Planetary Gear P.23B-55, Direct Planetary Carrier P.23C-66, Differential P.23C-70 <5A/T>. Then check the symptom.

Q: Is the symptom eliminated?

YES : The procedure is complete.
NO : Go to Step 5.

STEP 4. Check the oil pump.

(1) Remove the transaxle.
(2) Check the oil pump (incorrect installation, damage and etc.) and replace the oil pump assembly if necessary (The oil pump cannot be disassembled).Refer to GROUP 23B, Transaxle P.23B-8 <4A/T> or Refer to GROUP 23C, Transaxle P.23C-8 <5A/T>. Confirm that the malfunction symptom is eliminated.

Q: Is the symptom eliminated?

YES : The procedure is complete.
NO : Go to Step 5.

STEP 5. Replace the PCM.

When the PCM is replaced, register the encrypted code. Refer to GROUP 54A, Encrypted Code Registration Criteria Table P.54A-19.

Q: Is the symptom eliminated?

YES : The procedure is complete.
NO : Start over at Step 1.

INSPECTION PROCEDURE 5: Engine Stalls when Moving Selector Lever from "N" to "D" or "N" to "R"

COMMENT

If the engine stalls when the selector lever is shifted from "N" to "D" or "R" range while the engine is idling, the cause is probably a malfunction of the engine system, torque converter clutch solenoid valve, valve body or torque converter (torque converter clutch malfunction).

TROUBLESHOOTING HINTS (THE MOST LIKELY CAUSES FOR THIS CONDITION:)

- Malfunction of the engine system
- Malfunction of the torque converter clutch solenoid
- Malfunction of the valve body
- Malfunction of the torque converter (Malfunction of the torque converter clutch)
- Malfunction of the PCM

DIAGNOSIS

STEP 1. Check the engine system.

Refer to GROUP 13A <2.4L Engine>, Diagnosis – Trouble Symptom Chart – When the engine is hot, it stalls at idle P.13A-46.

Refer to GROUP 13B <3.8L Engine>, Diagnosis – Trouble Symptom Chart – When the engine is hot, it stalls at idle P.13B-49.

Q: Is the inspection result good?

YES : Go to Step 2.

NO : Repair or replace the engine components.

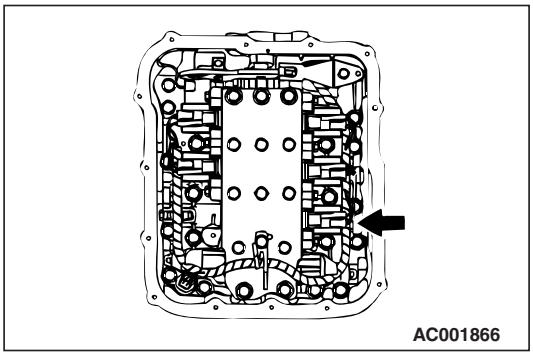

STEP 2. Replace the torque converter clutch solenoid valve.

Replace the torque converter clutch solenoid valve. Refer to GROUP 23B, Valve Body P.23B-65 <4A/T> or Refer to GROUP 23C, Valve Body P.23C-73 <5A/T>. Then check the symptom.

Q: Is the symptom eliminated?

YES : The procedure is complete.

NO : Go to Step 3.

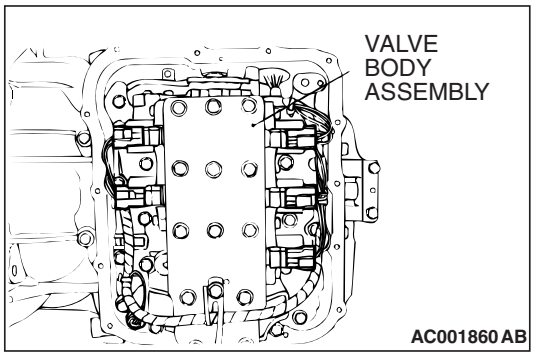

STEP 3. Disassemble and clean the valve body.

Check the O-ring installation bolts for looseness and valve body for damage. Repair or replace the faulty parts. Refer to GROUP 23B, Valve Body P.23B-65 <4A/T> or Refer to GROUP 23C, Valve Body P.23C-73 <5A/T>.

Replace the valve body assembly if the damage is too extensive. Then check the symptom.

Q: Is the symptom eliminated?

YES : The procedure is complete.

NO : Go to Step 4.

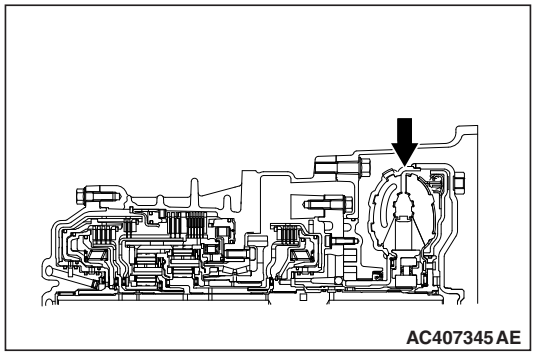

STEP 4. Replace the torque converter assembly.

(1) Remove the transaxle.

(2) Replace the torque converter assembly. Refer to GROUP 23B, Transaxle P.23B-8 <4A/T> or Refer to GROUP 23C, Transaxle P.23C-8 <5A/T>. Then check the symptom.

Q: Is the symptom eliminated?

YES : The procedure is complete.

NO : Go to Step 5.

STEP 5. Replace the PCM.

When the PCM is replaced, register the encrypted code. Refer to GROUP 54A, Encrypted Code Registration Criteria Table P.54A-19.

Q: Is the symptom eliminated?

YES : The procedure is complete.

NO : Start over at Step 1.

INSPECTION PROCEDURE 6: Shift Shock when Shifting from "N" to "D" and Long Delay

COMMENT

If abnormal shock or delay of two seconds or more occurs when the selector lever is shifted from "N" to "D" range while the engine is idling, the cause is probably abnormal underdrive clutch pressure or a malfunction of the underdrive clutch, valve body or TP sensor.

TROUBLESHOOTING HINTS (THE MOST LIKELY CAUSES FOR THIS CONDITION:)

- Abnormal underdrive clutch pressure
- Malfunction of the underdrive solenoid valve
- Malfunction of the underdrive clutch
- Malfunction of the valve body
- Malfunction of the TP sensor
- Malfunction of the PCM

DIAGNOSIS

Required Special Tools:

- MB991958: Scan Tool (M.U.T.-III Sub Assembly)
  - MB991824: V.C.I.
  - MB991827: M.U.T.-III USB Cable
  - MB991910: M.U.T.-III Main Harness A

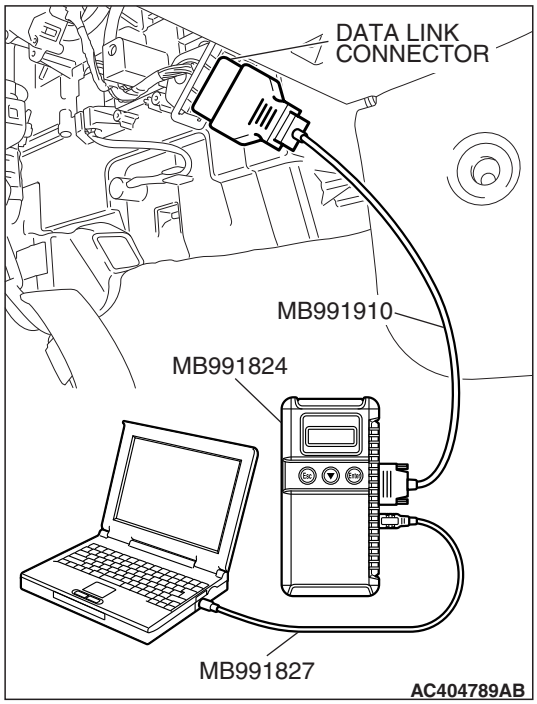

STEP 1. Using scan tool MB991958, check actuator test item 2: Underdrive Solenoid Valve.

⚠ CAUTION

To prevent damage to scan tool MB991958, always turn the ignition switch to the "LOCK" (OFF) position before connecting or disconnecting scan tool MB991958.

(1) Connect scan tool MB991958 to the data link connector.
(2) Turn the ignition switch to the "ON" position.
(3) Set scan tool MB991958 to the actuator test mode.
- Item 2: Underdrive Solenoid Valve.
  - An audible clicking or buzzing should be heard when the underdrive solenoid valve is energized.

(4) Turn the ignition switch to the "LOCK" (OFF) position.

Q: Is the solenoid valve operating properly?

YES : Go to Step 2.
NO : Repair or replace the underdrive solenoid valve. Refer to GROUP 23B, Valve Body P.23B-65 <4A/T> or Refer to GROUP 23C, Valve Body P.23C-73 <5A/T>. Then confirm that the symptom is eliminated.

STEP 2. Check when shift shock occurs.

Q: When does the shift shock occur?

When engaging from "N" to "D" : Go to Step 3.
When the vehicle starts moving : Go to Step 6.

STEP 3. Check the hydraulic pressure (for underdrive clutch).

Measure the hydraulic pressure for underdrive clutch when the selector lever is shifted from "N" to "D" range. Check if the hydraulic pressure is within the standard value. Refer to P.23A-37, Hydraulic Pressure Test.

Q: Is the hydraulic pressure within the standard value?

YES : Go to Step 4.
NO : Go to Step 8.

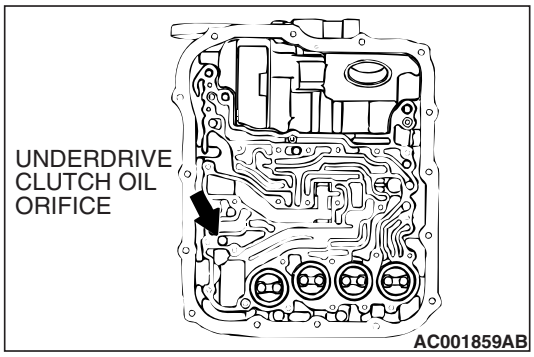

STEP 4. Check the underdrive clutch system.

(1) Remove the valve body cover and valve body. Refer to GROUP 23B, Transaxle P.23B-8 <4A/T> or GROUP 23C, Transaxle P.23C-8 <5A/T>.

(2) Blow 108 kPa (15 psi) compressed air into the underdrive clutch oil orifice of the transaxle case, and check if the underdrive clutch piston moves and air pressure is maintained in that condition.

Q: Is the air pressure maintained?

YES : Go to Step 8.
NO : Go to Step 5.

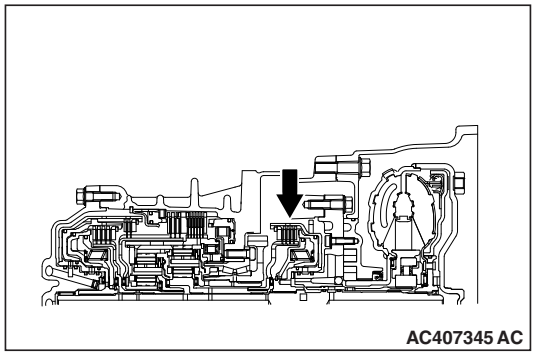

STEP 5. Check the underdrive clutch.

(1) Remove the transaxle assembly.

(2) Check the facing for seizure and the piston seal ring for damage and interference with the retainer. Repair or replace the faulty parts. Refer to GROUP 23B P.23B-48, Underdrive Clutch and Input Shaft <4A/T> or Refer to GROUP 23C P.23C-52, Underdrive Clutch and Input Shaft <5A/T>. Then check the symptom.

Q: Is the symptom eliminated?

YES : The procedure is complete.
NO : Go to Step 9.

STEP 6. Check shift shock.

Q: Does shift shock occur?

YES : Go to Step 7.
NO : Go to Step 8.

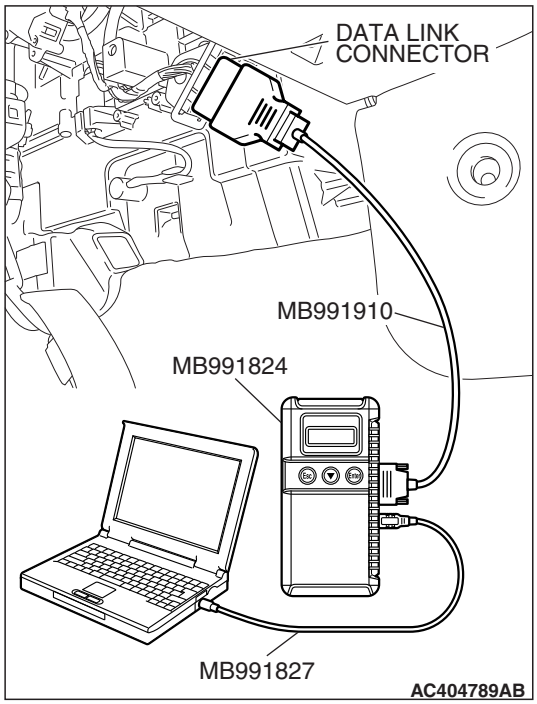

STEP 7. Using scan tool MB991958, check data list item 2: TP Sensor.

⚠ CAUTION

To prevent damage to scan tool MB991958, always turn the ignition switch to the "LOCK" (OFF) position before connecting or disconnecting scan tool MB991958.

(1) Connect scan tool MB991958 to the data link connector.
(2) Turn the ignition switch to the "ON" position.
(3) Set scan tool MB991958 to the data reading mode.
- Item 2: TP Sensor.
  - With the throttle valve in idle position, voltage should measure between 300 and 700 mV.
  - With the throttle valve in full-open position, voltage should measure 4,000 mV or more.

(4) Turn the ignition switch to the "LOCK" (OFF) position.

Q: Is the measured voltage between 300 and 700 mV at idle, and 4,000 mV or more at the full-open position?

YES : Go to Step 8.

NO : Check the TP sensor. Refer to GROUP13A <2.4L Engine>, Diagnostic Trouble Code Procedures P.13A-267, P.13A-278, DTCs P0122, P0123: TP Sensor System or Refer to GROUP13B <3.8L Engine>, Diagnostic Trouble Code Procedures P.13B-271, P.13B-282, DTCs P0122, P0123: TP Sensor System. Then check the symptom.

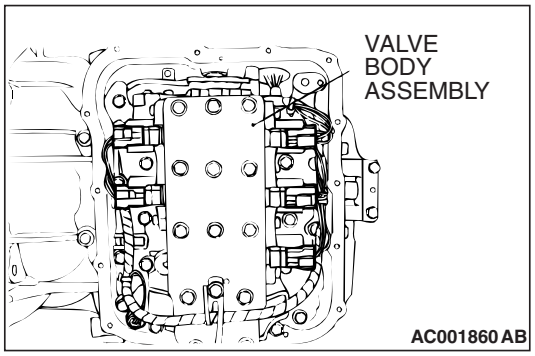

STEP 8. Disassemble and clean the valve body.

Check the O-ring installation bolts for looseness and the valve body for damage. Repair or replace the faulty parts. Refer to GROUP 23B, Valve Body P.23B-65 <4A/T> or Refer to GROUP 23C, Valve Body P.23C-73 <5A/T>.
Replace the valve body assembly if the damages are thought to be irreparable. Then check the symptom.

Q: Is the symptom eliminated?

YES : The procedure is complete.

NO : Replace the valve body assembly. Then check the symptom. Go to Step 9.

STEP 9. Replace the PCM.

When the PCM is replaced, register the encrypted code. Refer to GROUP 54A, Encrypted Code Registration Criteria Table P.54A-19.

Q: Is the symptom eliminated?

YES : The procedure is complete.

NO : Start over at Step 1.

INSPECTION PROCEDURE 7: Shift Shock when Shifting from "N" to "R" and Long Delay

COMMENT

If abnormal shock or delay of two seconds or more occurs when the selector lever is shifted from "N" to "R" range while the engine is idling, the cause is probably abnormal reverse clutch pressure or low-reverse brake pressure, or a malfunction of the reverse clutch, low-reverse brake, valve body or TP sensor.

TROUBLESHOOTING HINTS (THE MOST LIKELY CAUSES FOR THIS CONDITION:)

- Abnormal reverse clutch pressure
- Abnormal low-reverse brake pressure
- Malfunction of the low-reverse solenoid valve
- Malfunction of the reverse clutch
- Malfunction of the low-reverse brake
- Malfunction of the valve body
- Malfunction of the TP sensor
- Malfunction of the PCM

DIAGNOSIS

Required Special Tool:

- MB991958: Scan Tool (M.U.T.-III Sub Assembly)
  - MB991824: V.C.I.
  - MB991827: M.U.T.-III USB Cable
  - MB991910: M.U.T.-III Main Harness A

STEP 1. Using scan tool MB991958, check actuator test item 1: Low-Reverse Solenoid Valve.

⚠ CAUTION

To prevent damage to scan tool MB991958, always turn the ignition switch to the "LOCK" (OFF) position before connecting or disconnecting scan tool MB991958.

(1) Connect scan tool MB991958 to the data link connector.
(2) Turn the ignition switch to the "ON" position.
(3) Set scan tool MB991958 to the actuator test mode.
- Item 1: Low-Reverse Solenoid Valve.
  - An audible clicking or buzzing should be heard when the low-reverse solenoid valve is energized.

(4) Turn the ignition switch to the "LOCK" (OFF) position.

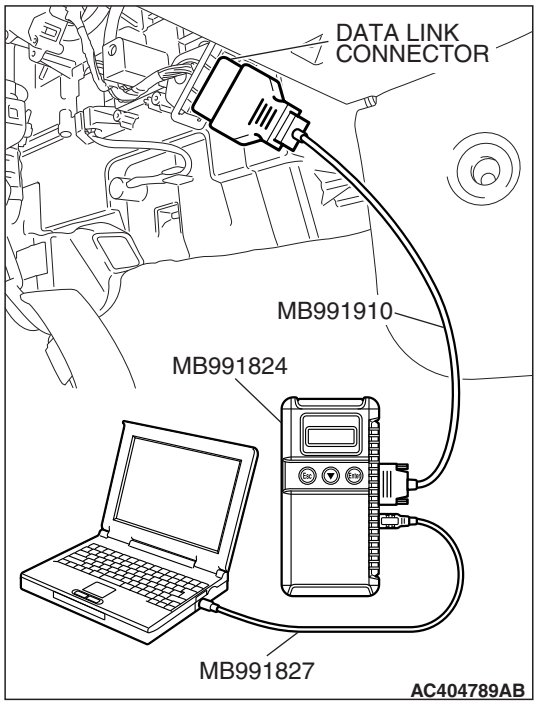

Q: Is the solenoid valve operating properly?

YES : Go to Step 2.

NO : Repair or replace the low-reverse solenoid valve. Refer to GROUP 23B, Valve Body P.23B-65 <4A/T> or Refer to GROUP 23C, Valve Body P.23C-73 <5A/T>. Then confirm that the symptom is eliminated.

STEP 2. Check when shift shock occurs.

Q: When does the shift shock occur?

When engaging from "N" to "R" : Go to Step 3.

When the vehicle starts moving : Go to Step 7.

STEP 3. Check the hydraulic pressure (for reverse clutch).
Measure the hydraulic pressure for reverse clutch when the selector lever is at the "R" range. Check if the hydraulic pressure is within the standard value. Refer to P.23A-37, Hydraulic Pressure Test.

Q: Is the hydraulic pressure within the standard value?

YES : Go to Step 4.
NO : Go to Step 9.

STEP 4. Check the hydraulic pressure (for low-reverse brake).
Measure the hydraulic pressure for low-reverse brake when the selector lever is at the "R" range. Check if the hydraulic pressure is within the standard value. Refer to P.23A-37, Hydraulic Pressure Test.

Q: Is the hydraulic pressure within the standard value?

YES : Go to Step 5.
NO : Go to Step 9.

STEP 5. Check the reverse clutch system and low-reverse brake system.

(1) Remove the valve body cover and valve body. Refer to GROUP 23B, Transaxle P.23B-8 <4A/T> or GROUP 23C, Transaxle P.23C-8 <5A/T>.
(2) Blow 108 kPa (15 psi) compressed air into the reverse clutch oil orifice of the transaxle case, and check if the reverse clutch piston moves and air pressures are maintained in that condition. Repeat for the low-reverse brake.

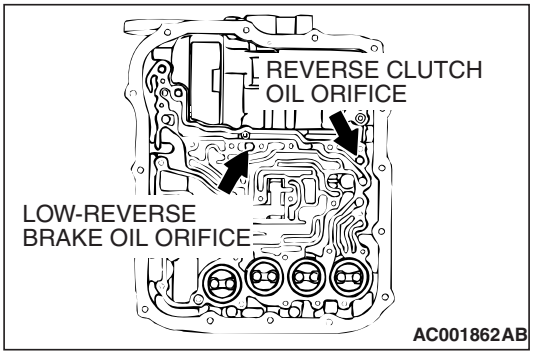

Q: Are both air pressures maintained?

YES : Go to Step 6.
NO : Go to Step 9.

STEP 6. Check the reverse clutch and low-reverse brake.

(1) Remove the transaxle assembly.
(2) Check the facing for seizure and the piston seal ring for damage and interference with the retainer. Repair or replace the faulty parts. Refer to GROUP 23B, Transaxle P.23B-8, Reverse and Overdrive Clutch P.23C-55 <4A/T> or Refer to GROUP 23C, Transaxle P.23C-8, Reverse and Overdrive Clutch P.23C-55 <5A/T>. Then Retest the system.

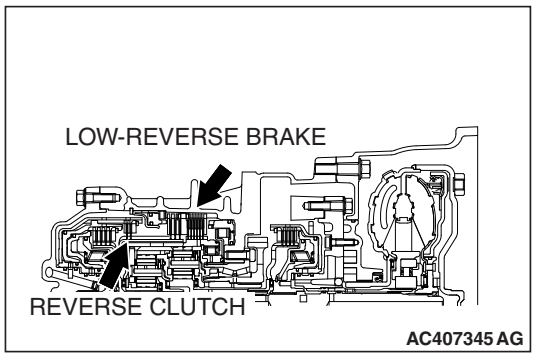

Q: Is the symptom eliminated?

YES : The procedure is complete.
NO : Go to Step 10.

STEP 7. Check shift shock.

Q: Does shift shock occur sometimes?

YES : Go to Step 8.
NO : Go to Step 9.

STEP 8. Using scan tool MB991958, check data list item 2: TP Sensor.

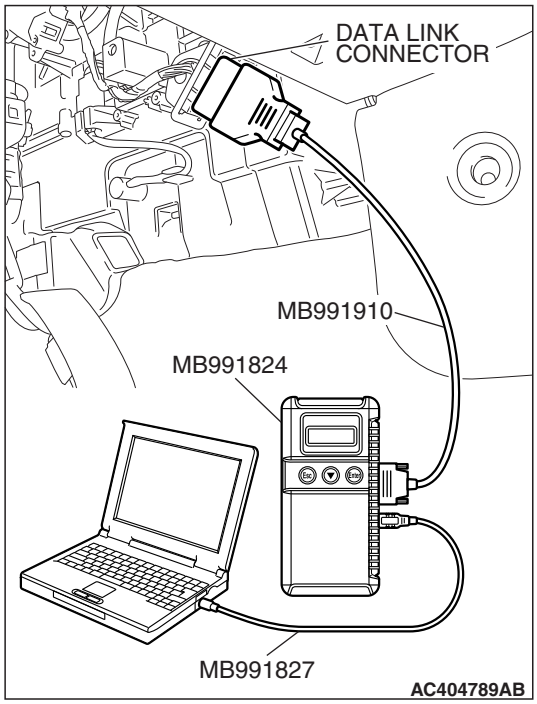

⚠ CAUTION
To prevent damage to scan tool MB991958, always turn the ignition switch to the "LOCK" (OFF) position before connecting or disconnecting scan tool MB991958.

(1) Connect scan tool MB991958 to the data link connector.
(2) Turn the ignition switch to the "ON" position.
(3) Set scan tool MB991958 to the data reading mode.
- Item 2: TP Sensor.
  - With the throttle valve in idle position, voltage should measure between 300 and 700 mV.
  - With the throttle valve in full-open position, voltage should measure 4,000 mV or more.

(4) Turn the ignition switch to the "LOCK" (OFF) position.

Q: Is the measured voltage between 300 and 700 mV at idle, and 4,000 mV or more at the full-open position?

YES : Go to Step 9.
NO : Check the TP sensor. Refer to GROUP13A <2.4L Engine>, Diagnostic Trouble Code Procedures P.13A-267, P.13A-278, DTCs P0122, P0123: TP Sensor System or Refer to GROUP13B <3.8L Engine>, Diagnostic Trouble Code Procedures P.13B-271, P.13B-282, DTCs P0122, P0123: TP Sensor System. Then check the symptom.

STEP 9. Disassemble and clean the valve body.

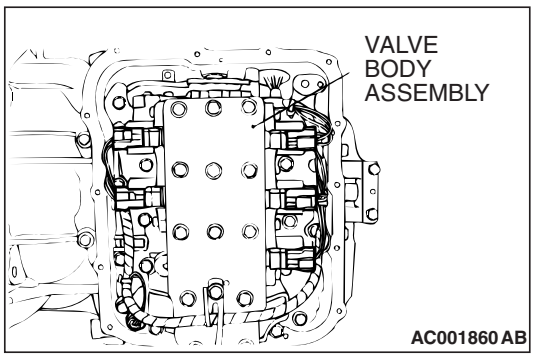

Check the O-ring installation bolts for looseness and the valve body for damage. Repair or replace the faulty parts. Refer to GROUP 23B, Valve Body P.23B-65 <4A/T> or GROUP 23C, Valve Body P.23C-73 <5A/T>.
Replace the valve body assembly if the damages are thought to be irreparable. Then check the symptom.

Q: Is the symptom eliminated?

YES : The procedure is complete.
NO : Go to Step 10.

STEP 10. Replace the PCM.

When the PCM is replaced, register the encrypted code. Refer to GROUP 54A, Encrypted Code Registration Criteria Table P.54A-19.

Q: Is the symptom eliminated?

YES : The procedure is complete.
NO : Start over at Step 1.

INSPECTION PROCEDURE 8: Shift Shock when Shifting from "N" to "D," "N" to "R" and Long Delay

COMMENT

If abnormal shock or delay of two seconds or more occurs when the selector lever is moved from "N" to "D" range or from "N" to "R" range while the engine is idling, the cause is probably abnormal line pressure or a malfunction of the oil pump or valve body.

TROUBLESHOOTING HINTS (THE MOST LIKELY CAUSES FOR THIS CONDITION:)

- Abnormal line pressure
- Malfunction of the oil pump
- Malfunction of the valve body
- Malfunction of the PCM

DIAGNOSIS

STEP 1. Check the hydraulic pressure.

(1) Measure the hydraulic pressure of each element when the transaxle is in 1st, 2nd or reverse. Check if each hydraulic pressure is within the standard value. Refer to P.23A-37, Hydraulic Pressure Test.

(2) If some elements pressures are within the standard value and some are not, recheck the symptom.

Q: Are all hydraulic pressures within the standard value?

YES : Go to Step 3.
NO : Go to Step 2.

STEP 2. Adjust line pressure.

Adjust line pressure. Refer to P.23A-64, Line Pressure Adjustment. Then check the symptom.

Q: Is the symptom eliminated?

YES : The procedure is complete.
NO : Go to Step 3.

STEP 3. Check when shift shock occurs.

Q: When does the shift shock occur?

When engaging from "N" to "D" and "N" to "R" : Go to Step 4.
When the vehicle starts moving : Go to Step 5.

STEP 4. Check the oil pump.

(1) Remove the transaxle.

(2) Check the oil pump (incorrect installation, damage and etc.) and replace the oil pump assembly if necessary (The oil pump cannot be disassembly).Refer to GROUP 23B, Transaxle P.23B-8 <4A/T> or Refer to GROUP 23C, Transaxle P.23C-8 <5A/T>. Confirm that the malfunction symptom is eliminated.

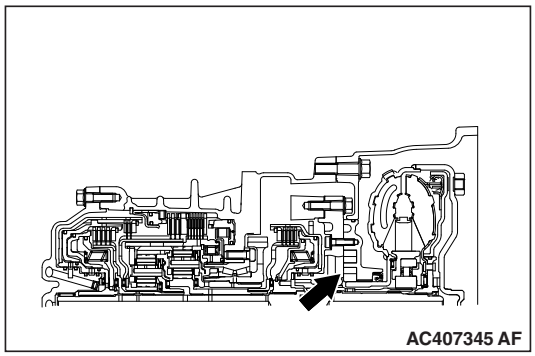
AC407345 AF

Q: Is the symptom eliminated?

YES : The procedure is complete.
NO : Go to Step 6.

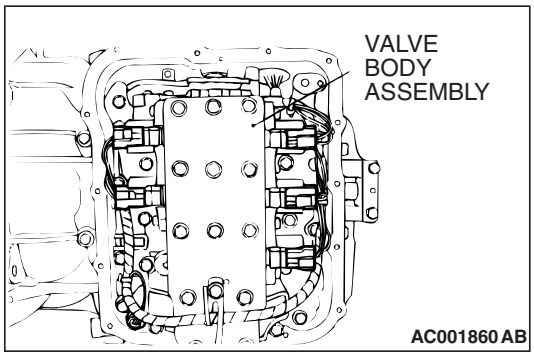

STEP 5. Disassemble and clean the valve body.
Check the installation bolts for looseness and the O-ring, valves and valve body for damage. Repair or replace the faulty parts. Refer to GROUP 23B, Valve Body P.23B-65 <4A/T> or GROUP 23C, Valve Body P.23C-73 <5A/T>.
Replace the valve body assembly if the damages are thought to be irreparable. Then check the symptom.

Q: Is the symptom eliminated?
YES : The procedure is complete.
NO : Go to Step 6.

STEP 6. Replace the PCM.
When the PCM is replaced, register the encrypted code. Refer to GROUP 54A, Encrypted Code Registration Criteria Table P.54A-19.

Q: Is the symptom eliminated?
YES : The procedure is complete.
NO : Start over at Step 1.

INSPECTION PROCEDURE 9: Shift Shock and Slipping

COMMENT
If shift shock when driving is due to upshifting or downshifting and the transaxle speed become higher than the engine speed, the cause is probably abnormal line pressure or a malfunction of a solenoid valve, oil pump, valve body or of a brake or clutch.

TROUBLESHOOTING HINTS (THE MOST LIKELY CAUSES FOR THIS CONDITON:)
- Abnormal line pressure
- Malfunction of each solenoid valve
- Malfunction of the oil pump
- Malfunction of the valve body
- Malfunction of each brake or each clutch
- Malfunction of the PCM

DIAGNOSIS
Required Special Tools:
- MB991958: Scan Tool (M.U.T.-III Sub Assembly)
  - MB991824: V.C.I.
  - MB991827: M.U.T.-III USB Cable
  - MB991910: M.U.T.-III Main Harness A

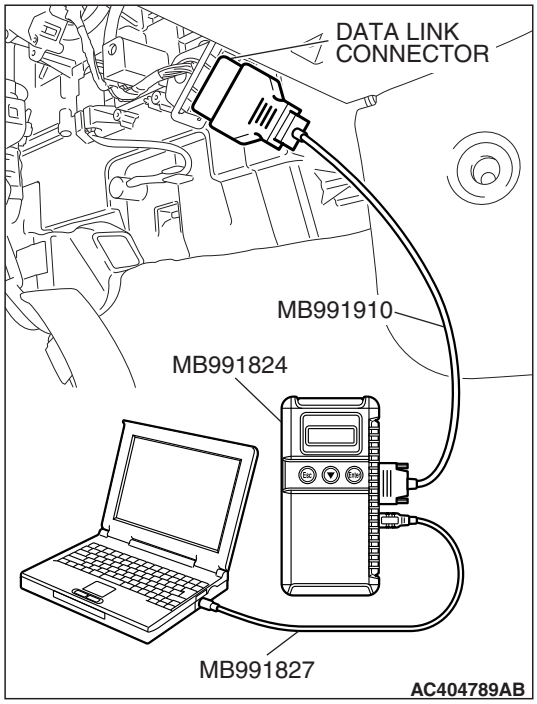

STEP 1. Using scan tool MB991958, check actuator test.

⚠ CAUTION

To prevent damage to scan tool MB991958, always turn the ignition switch to the "LOCK" (OFF) position before connecting or disconnecting scan tool MB991958.

(1) Connect scan tool MB991958 to the data link connector.
(2) Turn the ignition switch to the "ON" position.
(3) Set scan tool MB991958 to the actuator test mode for following items.
  a. Item 1: Low-reverse solenoid valve
  b. Item 2: Underdrive solenoid valve
  c. Item 3: Second solenoid valve
  d. Item 4: Overdrive solenoid valve
  e. Item 5: Reduction solenoid valve <5A/T>
    - An audible clicking or buzzing should be heard when the solenoid valves are energized.
(4) Turn the ignition switch to the "LOCK" (OFF) position.

Q: Are the solenoid valves operating properly?

YES : Go to Step 2.
NO : Repair or replace the solenoid valves. Refer to GROUP 23B, Valve Body P.23B-65 <4A/T> or GROUP 23C, Valve Body P.23C-73 <5A/T>. Then confirm that the symptom is eliminated.

STEP 2. Check the hydraulic pressure.

(1) Measure the hydraulic pressure of each element. Check if each hydraulic pressure is within the standard value. Refer to P.23A-37, Hydraulic Pressure Test.
(2) If some elements pressure are within the standard value and some are not, recheck the symptom.

Q: Are all hydraulic pressures within the standard value?

YES : Go to Step 6.
NO : Go to Step 3.

STEP 3. Adjust the line pressure.

Adjust the line pressure. Refer to P.23A-64, Line Pressure Adjustment. Then check the symptom.

Q: Is the symptom eliminated?

YES : The procedure is complete.
NO : Go to Step 4.

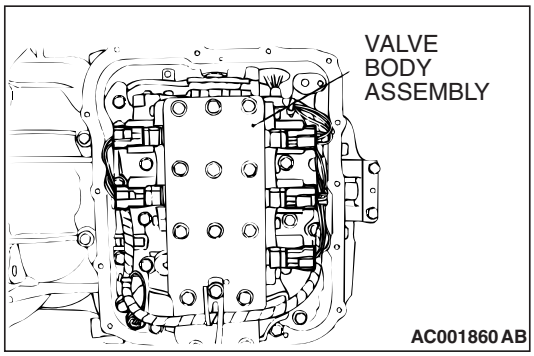

STEP 4. Disassemble and clean the valve body.

Check the O-ring installation bolts for looseness and the valve body for damage. Repair or replace the faulty parts. Refer to GROUP 23B, Valve Body P.23B-65 <4A/T> or GROUP 23C, Valve Body P.23C-73 <5A/T>.

Replace the valve body assembly if the damages are thought to be irreparable. Then check the symptom.

Q: Is the symptom eliminated?

YES : The procedure is complete.

NO : Go to Step 5.

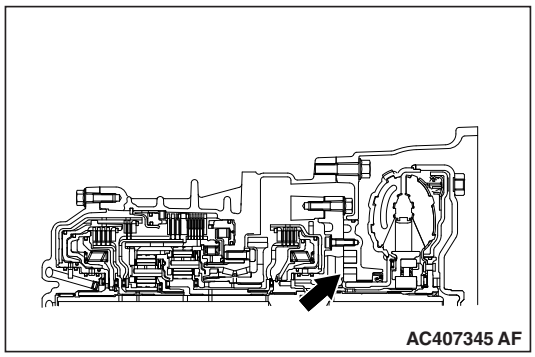

STEP 5. Check the oil pump.

(1) Remove the transaxle.

(2) Check the oil pump (incorrect installation, damage and etc.) and replace the oil pump assembly if necessary (The oil pump cannot be disassembly).Refer to GROUP 23B, Transaxle P.23B-8 <4A/T> or GROUP 23C, Transaxle P.23C-8 <5A/T>. Confirm that the malfunction symptom is eliminated.

Q: Is the symptom eliminated?

YES : The procedure is complete.

NO : Go to Step 7.

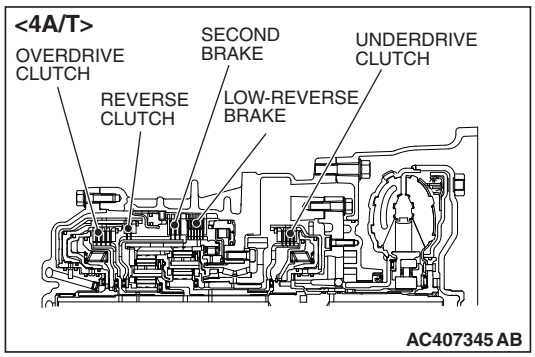

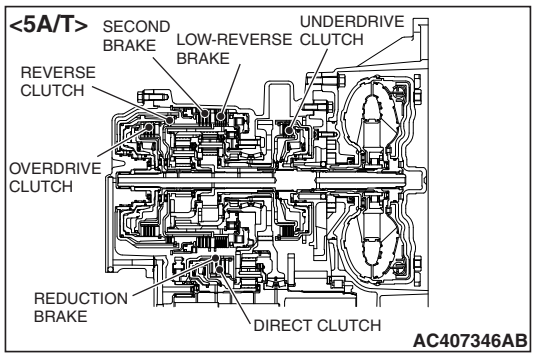

STEP 6. Check each brake and clutch.

(1) Remove the transaxle.

(2) Check the facing for seizure and piston seal ring for damage and interference with retainer. Repair or replace the faulty parts. Refer to GROUP 23B, Transaxle P.23B-8, Underdrive Clutch and Input Shaft P.23B-48, Reverse and Overdrive Clutch P.23B-51 <4A/T> or GROUP 23C, Transaxle P.23C-8, Underdrive Clutch and Input Shaft P.23C-52, Reverse and Overdrive Clutch P.23C-55 <5A/T>. Then Retest the system.

Q: Is the symptom eliminated?

YES : The procedure is complete.

NO : Go to Step 7.

STEP 7. Replace the PCM.
When the PCM is replaced, register the encrypted code. Refer to GROUP 54A, Encrypted Code Registration Criteria Table P.54A-19.

Q: Is the symptom eliminated?
YES : The procedure is complete.
NO : Start over at Step 1.

INSPECTION PROCEDURE 10: Early or Late Shifting in All Gears

COMMENT
If all shift points are early or late while driving, the cause is probably a malfunction of the output shaft speed sensor, TP sensor or a solenoid valve.

TROUBLESHOOTING HINTS (THE MOST LIKELY CAUSES FOR THIS CONDITION:)
- Malfunction of the output shaft speed sensor
- Malfunction of the TP sensor
- Malfunction of each solenoid valve
- Abnormal line pressure
- Malfunction of the valve body
- Malfunction of the PCM

DIAGNOSIS
Required Special Tools:
- MB991958: Scan Tool (M.U.T.-III Sub Assembly)
  - MB991824: V.C.I.
  - MB991827: M.U.T.-III USB Cable
  - MB991910: M.U.T.-III Main Harness A

STEP 1. Using scan tool MB991958, check data list item 6: Output Shaft Speed Sensor.

⚠ CAUTION
To prevent damage to scan tool MB991958, always turn the ignition switch to the "LOCK" (OFF) position before connecting or disconnecting scan tool MB991958.

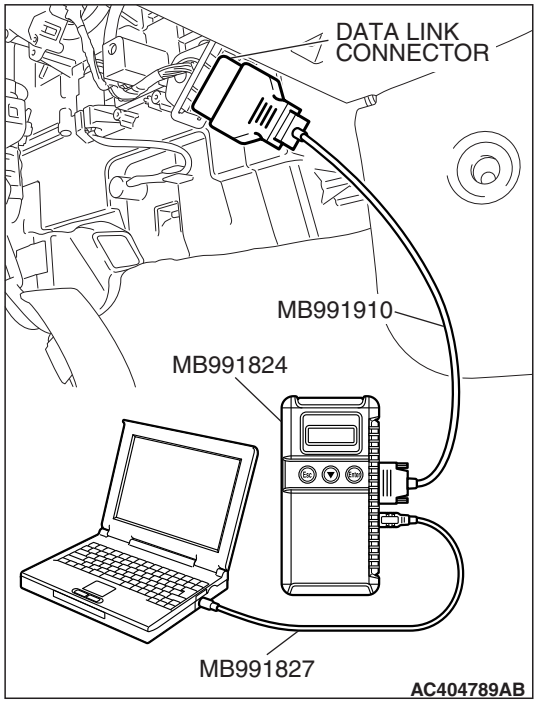

(1) Connect scan tool MB991958 to the data link connector.
(2) Start the engine.
(3) Set scan tool MB991958 to the data reading mode.
- Item 6: Output Shaft Speed Sensor.
  - When driving at constant speed of 50km/h (31mph), the display should be "1,500 – 1,800 r/min" (Gear range: 3rd gear <4A/T>).
  - When driving at constant speed of 60km/h (37mph), the display should be "1,400 – 1,700 r/min" (Gear range: 4th gear <5A/T>).

(4) Turn the ignition switch to the "LOCK" (OFF) position.

Q: Is the sensor operating properly?
YES : Go to Step 2.
NO : Refer to P.23A-113, DTC P1767 (P0720): Output shaft speed sensor system.

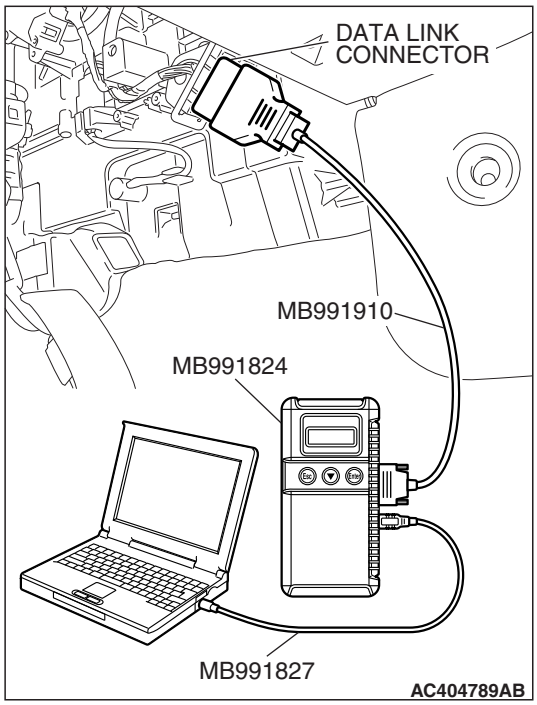

STEP 2. Using scan tool MB991958, check data list item 2: TP Sensor.

(1) Connect scan tool MB991958 to the data link connector.
(2) Turn the ignition switch to the "ON" position.
(3) Set scan tool MB991958 to the data reading mode.
- Item 2: TP Sensor.
  - With the throttle valve in idle position, voltage should measure between 300 and 700 mV.
  - With the throttle valve in full-open position, voltage should measure 4,000 mV or more.

(4) Turn the ignition switch to the "LOCK" (OFF) position.

Q: Is the measured voltage between 300 and 700 mV at idle, and 4,000 mV or more at the full-open position?

YES : Go to Step 3.

NO : Check the TP sensor. Refer to GROUP13A <2.4L Engine>, Diagnostic Trouble Code Procedures P.13A-267, P.13A-278, DTCs P0122, P0123: TP Sensor System or Refer to GROUP13B <3.8L Engine>, Diagnostic Trouble Code Procedures P.13B-271, P.13B-282, DTCs P0122, P0123: TP Sensor System. Then check the symptom.

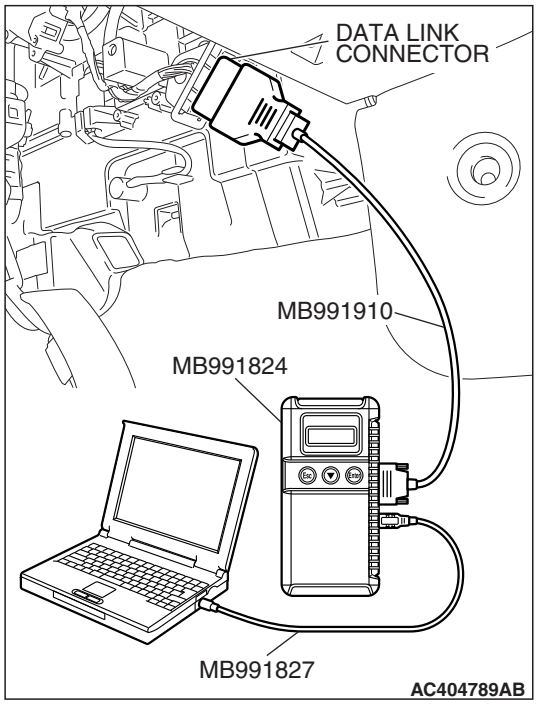

STEP 3. Using scan tool MB991958, check data list.

(1) Connect scan tool MB991958 to the data link connector.
(2) Start the engine.
(3) Set scan tool MB991958 to the data reading mode for following items.
  a. Item 12: Low-Reverse Solenoid Valve Duty Percent
  b. Item 13: Underdrive Solenoid Valve Duty Percent
  c. Item 14: Second Solenoid Valve Duty Percent
  d. Item 15: Overdrive Solenoid Valve Duty Percent
  e. Item 16: Reduction Solenoid Valve Duty Percent <5A/T>
    - Check that the values shown below are displayed when each data list item is entered.

<4A/T>

DRIVING CONDITION	DATA LIST ITEM			
	12	13	14	15
Driving at constant speed of 10 km/h (6.2 mph) in 1st gear	0%	0%	100%	100%
Driving at constant speed of 30 km/h (19 mph) in 2nd gear	100%	0%	0%	100%
Driving at constant speed of 50 km/h (31 mph) in 3rd gear	100%	0%	100%	0%
Driving at constant speed of 50 km/h (31 mph) in 4th gear	100%	100%	0%	0%

<5A/T>

DRIVING CONDITION	DATA LIST ITEM				
	12	13	14	15	16
Driving at constant speed of 10 km/h (6.2 mph) in 1st gear	0%	0%	100%	100%	0%
Driving at constant speed of 30 km/h (19 mph) in 2nd gear	100%	0%	0%	100%	0%
Driving at constant speed of 50 km/h (31 mph) in 3rd gear	100%	0%	100%	0%	0%
Driving at constant speed of 50 km/h (31 mph) in 4th gear	0%	0%	100%	0%	100%
Driving at constant speed of 70 km/h (36 mph) in 5th gear	0%	100%	0%	0%	100%

(4) Turn the ignition switch to the "LOCK" (OFF) position.

Q: Are the solenoid valves operating properly?

YES : Go to Step 4.
NO : Go to Step 6.

STEP 4. Adjust the line pressure.
Adjust the line pressure. Refer to P.23A-64, Line Pressure Adjustment. Then check the symptom.

Q: Is the symptom eliminated?

YES : The procedure is complete.
NO : Go to Step 5.

STEP 5. Disassemble and clean the valve body.
Check the O-ring installation bolts for looseness and the valve body for damage. Repair or replace the faulty parts. Refer to GROUP 23B, Valve Body P.23B-65 <4A/T> or GROUP 23C, Valve Body P.23C-73 <5A/T>.
Replace the valve body assembly if the damages are thought to be irreparable. Then check the symptom.

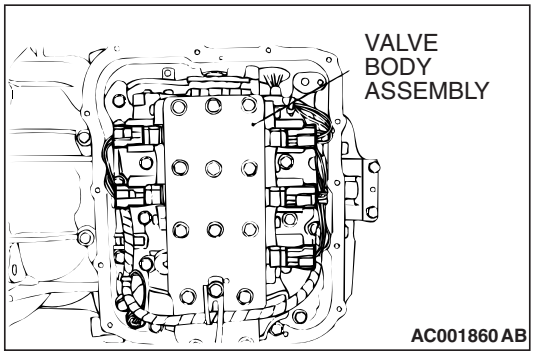

Q: Is the symptom eliminated?

YES : The procedure is complete.
NO : Go to Step 7.

STEP 6. Replace each solenoid valve.
Replace the faulty solenoid valve with a new one.

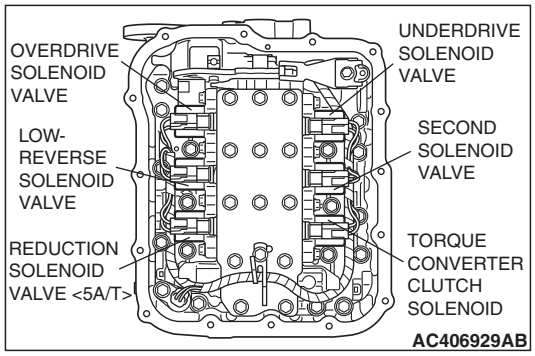

Q: Is the symptom eliminated?

YES : The procedure is complete.
NO : Go to Step 7.

STEP 7. Replace the PCM.
When the PCM is replaced, register the encrypted code. Refer to GROUP 54A, Encrypted Code Registration Criteria Table P.54A-19.

Q: Is the symptom eliminated?

YES : The procedure is complete.
NO : Start over at Step 1.

INSPECTION PROCEDURE 11: Early or Late Shifting in Some Gears

COMMENT

If some of the shift points are early or late when driving, the cause is probably a malfunction of the valve body, or it is due to the characteristics of the INVECS-II system but is not an abnormality.

TROUBLESHOOTING HINTS (THE MOST LIKELY CAUSES FOR THIS CONDITION:)

- Malfunction of the valve body
- Malfunction of the PCM

DIAGNOSIS

Required Special Tools:

- MB991958: Scan Tool (M.U.T.-III Sub Assembly)
  - MB991824: V.C.I.
  - MB991827: M.U.T.-III USB Cable
  - MB991910: M.U.T.-III Main Harness A

STEP 1. Using scan tool MB991958, check special function: INVECS-II Cancel Command.

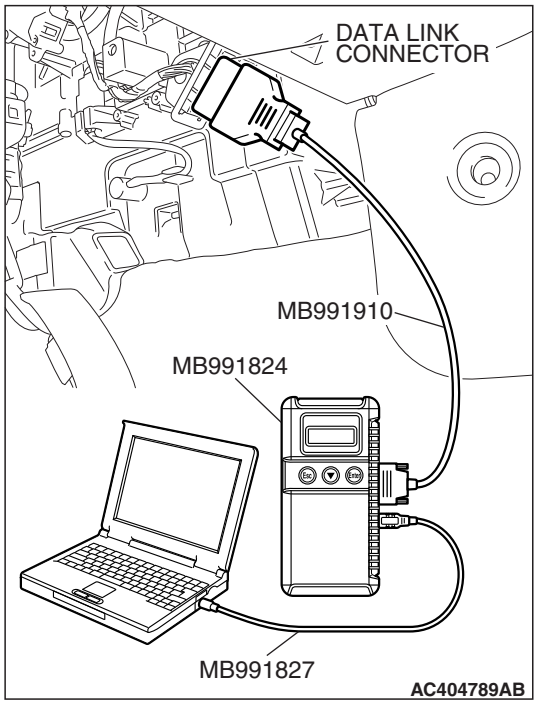

⚠ CAUTION

To prevent damage to scan tool MB991958, always turn the ignition switch to the "LOCK" (OFF) position before connecting or disconnecting scan tool MB991958.

(1) Connect scan tool MB991958 to the data link connector.
(2) Start the engine.
(3) Set scan tool MB991958 to the actuator test mode.
  - Special function: INVECS-II Cancel Command.
    - Drive the vehicle and confirm the gear shifting correspond to the standard shift line of the shift pattern diagram. Refer to P.23A-3.

(4) Turn the ignition switch to the "LOCK" (OFF) position.

Q: Does the gear shifting correspond to the standard shift line of the shift pattern diagram?

YES : The symptom is due to characteristics of the INVECS-II system, but is not abnormal.
NO : Go to Step 2.

STEP 2. Check the shift points.

Q: Are the shift points early or late only when transmission fluid is 29°C (84°F) or less (early), or 125°C (257°F) or more (late)?

YES : The symptom is due to characteristics of the INVECS-II system, but is not abnormal.
NO : Go to Step 3.

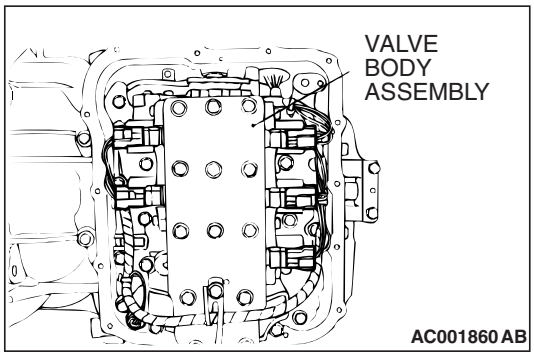

STEP 3. Disassemble and clean the valve body.

Check the O-ring installation bolts for looseness and the valve body for damage. Repair or replace the faulty parts. Refer to GROUP 23B, Valve Body P.23B-65 <4A/T> or GROUP 23C, Valve Body P.23C-73 <5A/T>.

Replace the valve body assembly if the damages are thought to be irreparable. Then check the symptom.

Q: Is the symptom eliminated?

YES : The procedure is complete.

NO : Go to Step 4.

STEP 4. Replace the PCM.

When the PCM is replaced, register the encrypted code. Refer to GROUP 54A, Encrypted Code Registration Criteria Table P.54A-19.

Q: Is the symptom eliminated?

YES : The procedure is complete.

NO : Start over at Step 1.

INSPECTION PROCEDURE 12: No Diagnostic Trouble Codes (Does not Shift)

Backup Power Supply System Circuit

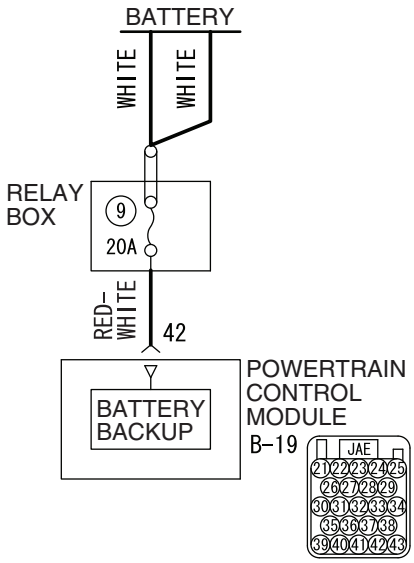

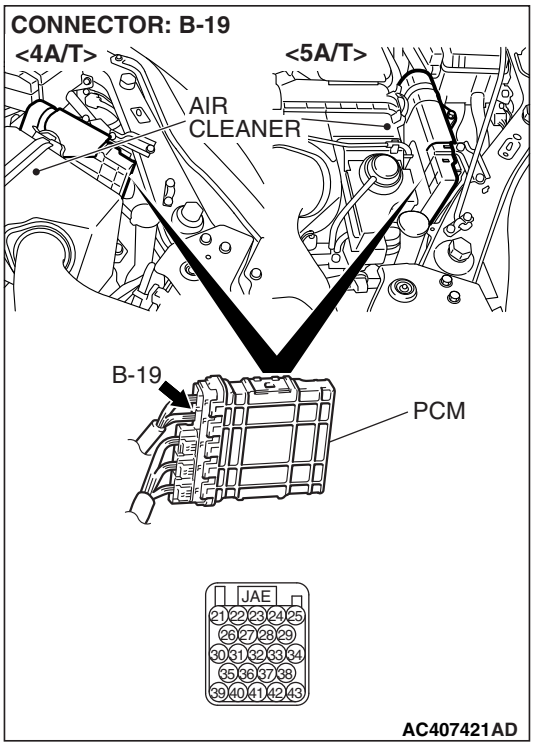

CIRCUIT OPERATION

PCM (terminal number 42) receives battery positive voltage from the battery.

COMMENT

If shifting does not occur while driving and no diagnostic trouble codes are output, a malfunction of the transmission range switch, or PCM may exist.

TROUBLESHOOTING HINTS (THE MOST LIKELY CAUSES FOR THIS CONDITION:)

- Malfunction of the transmission range switch
- Damaged harness, connector
- Malfunction of the PCM

DIAGNOSIS

Required Special Tools:

- MB991958: Scan Tool (M.U.T.-III Sub Assembly)
  - MB991824: V.C.I.
  - MB991827: M.U.T.-III USB Cable
  - MB991910: M.U.T.-III Main Harness A

STEP 1. Check the vehicle acceleration.

Q: Does the vehicle accelerate poorly (transaxle stays in 3rd gear) when starting from a stop with the selector lever in "D" range?

YES : Go to Step 2.
NO : Go to Step 5.

STEP 2. Measure the backup power supply voltage at PCM connector B-19 by using check harness special tool MB991923.

(1) Disconnect all the connectors from the PCM.

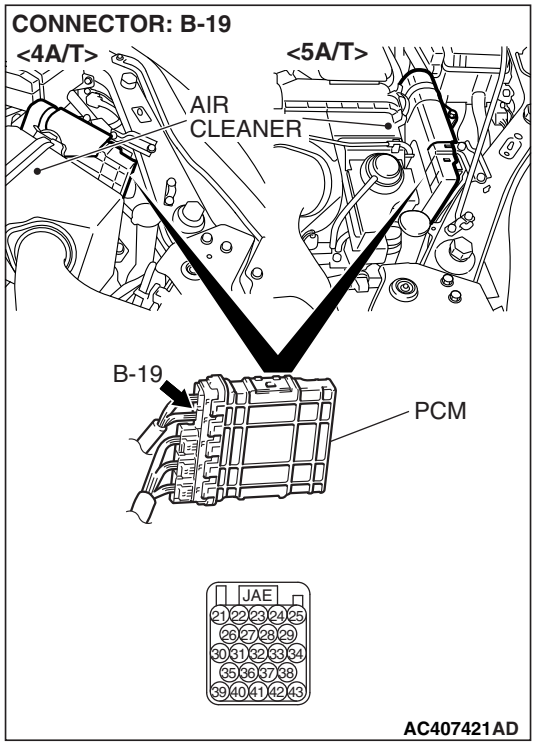

(2) Connect special tool MB991923 (check harness) between the PCM and the body-side harness connector.
(3) Turn the ignition switch to the "ON" position.

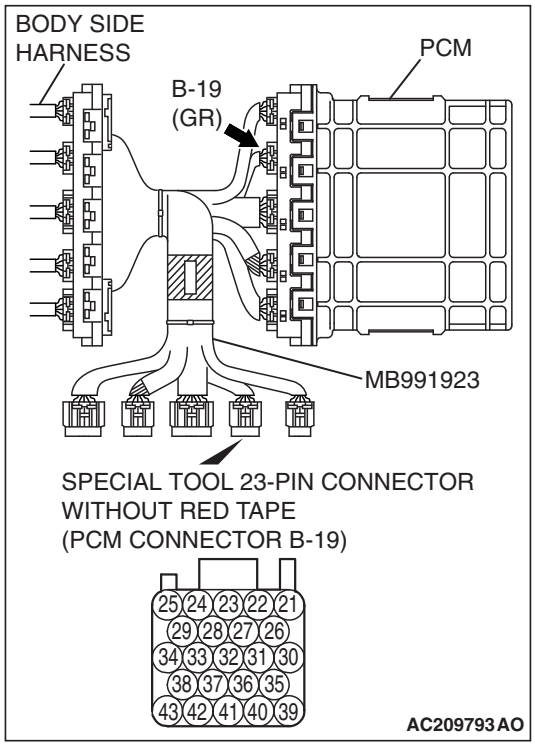

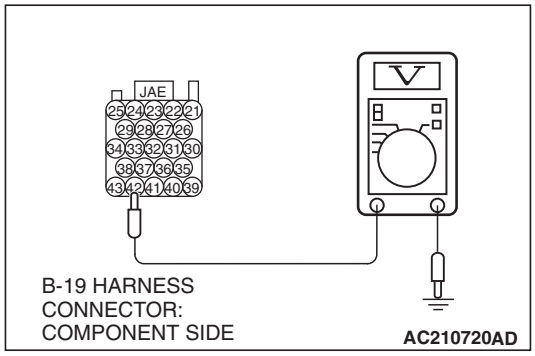

(4) Measure the voltage between terminal 42 and ground.
- The voltage should measure battery positive voltage.

(5) Turn the ignition switch to the "LOCK" (OFF) position.

Q: Is the measured voltage battery positive voltage?

YES : Go to Step 5.
NO : Go to Step 3.

STEP 3. Check PCM connector B-19 for loose, corroded or damaged terminals, or terminals pushed back in the connector.

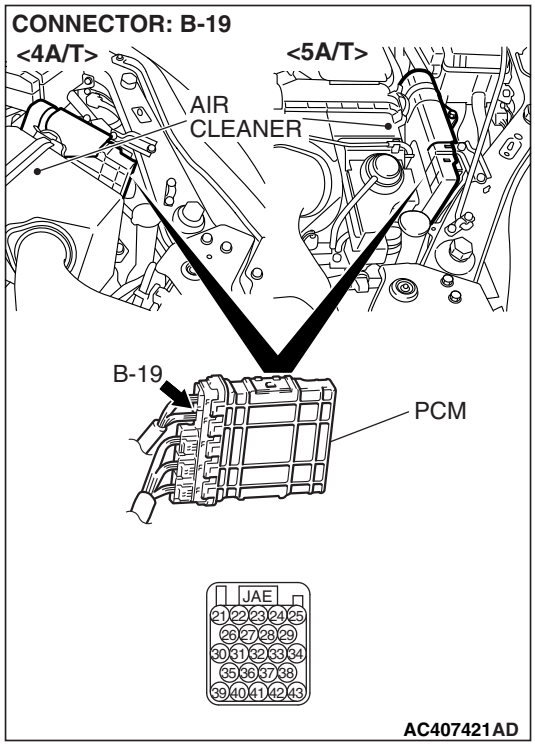

Q: Is the connector in good condition?

YES : Go to Step 4.
NO : Repair or replace the damaged components. Refer to GROUP 00E, Harness Connector Inspection P.00E-2. Then retest the system.

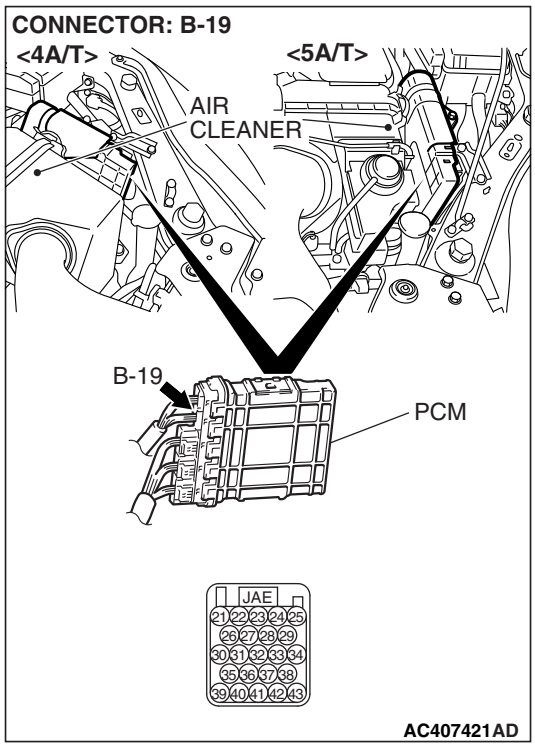

STEP 4. Check the harness for open circuit between PCM connector B-19 terminal 42 and battery.

Q: Is the harness wire in good condition?

YES : Go to Step 5.

NO : Repair or replace the harness wire.

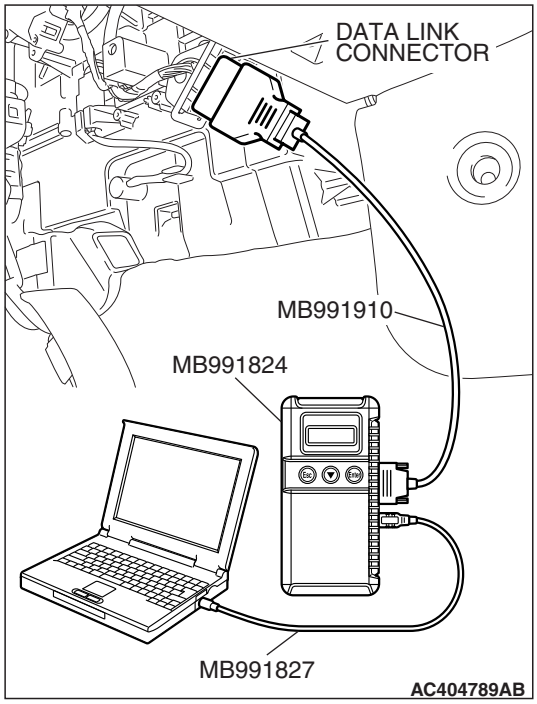

STEP 5. Using scan tool MB991958, check data list item 34: Transmission Range Switch.

⚠ CAUTION

To prevent damage to scan tool MB991958, always turn the ignition switch to the "LOCK" (OFF) position before connecting or disconnecting scan tool MB991958.

(1) Connect scan tool MB991958 to the data link connector.

(2) Turn the ignition switch to the "ON" position.

(3) Set scan tool MB991958 to the data reading mode.

- Item 34: Transmission Range Switch.
  - Move the selector lever to "P," "R," "N," "D" positions and confirm that the selected transmission range match the positions shown on scan tool MB991958 (The scan tool displays "D" range when the selector lever is shifted to the sport mode).

(4) Turn the ignition switch to the "LOCK" (OFF) position.

Q: Is the switch operating properly?

YES : Check for the symptom. If the symptom is not eliminated, replace the PCM.

NO : Adjust the transmission range switch and control cable. Refer to P.23A-396.

INSPECTION PROCEDURE 13: Poor Acceleration

COMMENT

If acceleration is poor when downshifting occurs while driving, a malfunction of the engine system or a brake or clutch may exist.

TROUBLESHOOTING HINTS (THE MOST LIKELY CAUSES FOR THIS CONDITION:)

- Malfunction of the engine system
- Malfunction of the clutch system and brake system
- Malfunction of the PCM

DIAGNOSIS

STEP 1. Check the engine system.

Refer to GROUP 13A <4A/T>, Diagnosis – Symptom Chart – Poor acceleration P.13A-1104.
Refer to GROUP 13B <5A/T>, Diagnosis – Symptom Chart – Poor acceleration P.13B-1150.

Q: Is the inspection result good?

YES : Go to Step 2.
NO : Repair or replace the engine component(s).

STEP 2. Check each brake and clutch.

Perform the torque converter stall test. Refer to P.23A-36, Torque Converter Stall Test. Then retest the system.

Q: Is the symptom eliminated?

YES : The procedure is complete.
NO : Go to Step 3.

STEP 3. Perform the hydraulic pressure test.

Perform the hydraulic pressure test. Refer to P.23A-37, Hydraulic Pressure Test. Then retest the system.

Q: Is the symptom eliminated?

YES : The procedure is complete.
NO : Go to Step 4.

STEP 4. Check each brake system and each clutch system.

(1) Remove the valve body cover and valve body. Refer to GROUP 23B, Transaxle P.23B-8 <4A/T> or GROUP 23C, Transaxle P.23C-8 <5A/T>.

(2) Blow 108 kPa (15 psi) compressed air into the each brake oil orifice and clutch oil orifice of the transaxle case, and check if each brake and each clutch piston move and air pressure is maintained.

Q: Is the air pressure maintained?

YES : The procedure is complete.

NO : Go to Step 5.

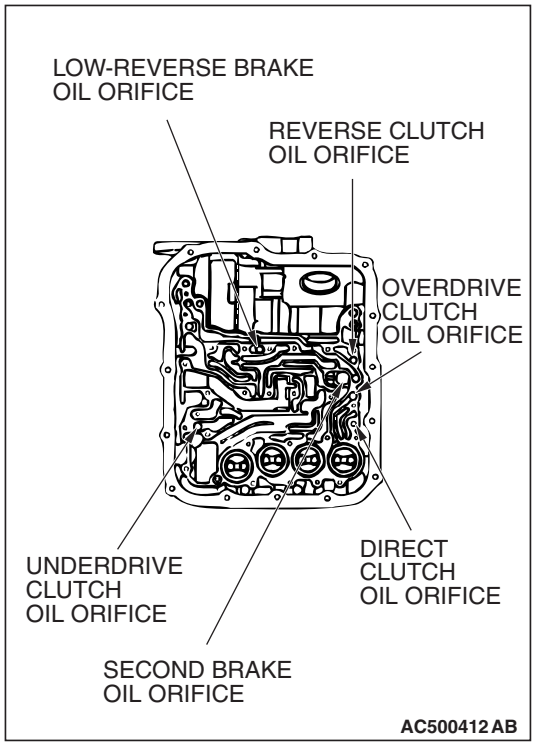

STEP 5. Check each brake system and clutch system.

(1) Remove the transaxle.

(2) Check the facings for seizure and piston seal ring for damage and interference with retainer. Repair or replace the faulty parts. Refer to GROUP 23B, Transaxle P.23B-8, Underdrive Clutch and Input Shaft P.23B-48, Reverse and Overdrive Clutch P.23B-51 <4A/T> GROUP 23C, Transaxle P.23C-8, Underdrive Clutch and Input Shaft P.23C-52, Reverse and Overdrive Clutch P.23C-55 <5A/T>. Then retest the system.

Q: Is the symptom eliminated?

YES : The procedure is complete.

NO : Go to Step 6.

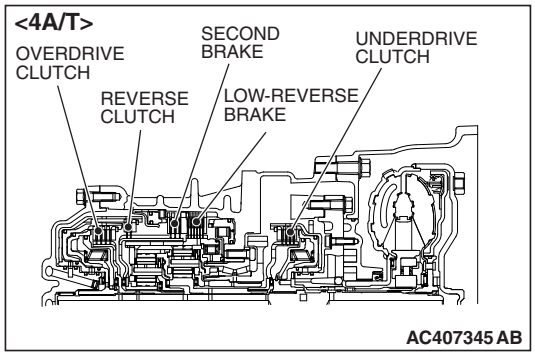

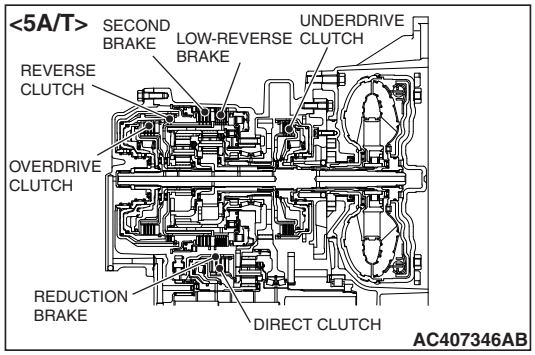

STEP 6. Replace the PCM.
When the PCM is replaced, register the encrypted code. Refer to GROUP 54A, Encrypted Code Registration Criteria Table P.54A-19.

Q: Is the symptom eliminated?

YES : The procedure is complete.
NO : Start over at Step 1.

INSPECTION PROCEDURE 14: Vibration

COMMENT

If vibration occurs when driving at constant speed or when accelerating in 4th gear, abnormal torque converter clutch pressure a malfunction of the engine system, torque converter clutch solenoid, torque converter or valve body may exist.

TROUBLESHOOTING HINTS (THE MOST LIKELY CAUSES FOR THIS CONDITION:)

- Abnormal torque converter clutch pressure
- Malfunction of the engine system
- Malfunction of the torque converter clutch solenoid
- Malfunction of the torque converter
- Malfunction of the valve body
- Malfunction of the PCM

DIAGNOSIS

Required Special Tools:

- MB991958: Scan Tool (M.U.T.-III Sub Assembly)
  - MB991824: V.C.I.
  - MB991827: M.U.T.-III USB Cable
  - MB991910: M.U.T.-III Main Harness A

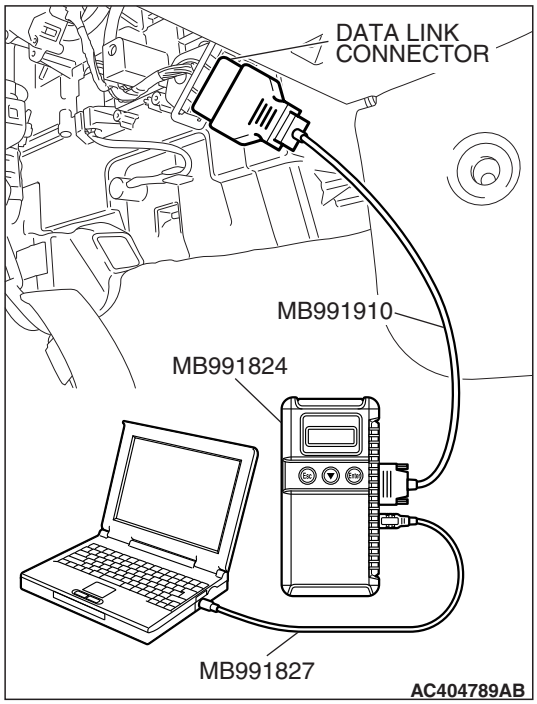

STEP 1. Using scan tool MB991958, check actuator test item 6: Torque Converter Clutch Solenoid Valve.

⚠ CAUTION

To prevent damage to scan tool MB991958, always turn the ignition switch to the "LOCK" (OFF) position before connecting or disconnecting scan tool MB991958.

(1) Connect scan tool MB991958 to the data link connector.
(2) Turn the ignition switch to the "ON" position.
(3) Set scan tool MB991958 to the actuator test mode.
- Item 6: Torque Converter Clutch Solenoid Valve.
  - An audible clicking or buzzing should be heard when the torque converter clutch solenoid valve is energized.

(4) Turn the ignition switch to the "LOCK" (OFF) position.

Q: Is the solenoid valve operating properly?

YES : Go to Step 2.
NO : Repair or replace the torque converter clutch solenoid valve. Refer to GROUP 23B, Valve Body P.23B-65 <4A/T> or GROUP 23C, Valve Body P.23C-73 <5A/T>. Then confirm that the symptom is eliminated.

STEP 2. Check the vibration.

Q: Does the vibration occur when the transmission fluid temperature sensor connector has been disconnected?

YES : Check the engine system. Refer to GROUP 13A <2.4L Engine>, Diagnosis – Symptom Chart – Driving P.13A-46 or refer to GROUP 13B <3.8L Engine>, Diagnosis – Symptom Chart – Driving P.13B-49. If the inspection result is not good, diagnose, repair, and/or replace the engine component(s).
NO : Go to Step 3.

STEP 3. Check the torque converter hydraulic pressure.

Measure the torque converter hydraulic pressure. Then check if the torque converter hydraulic pressure is within the standard value. Refer to P.23A-37, Hydraulic Pressure Test.

Q: Is the torque converter hydraulic pressure within the standard value?

YES : Go to Step 4.
NO : Go to Step 5.

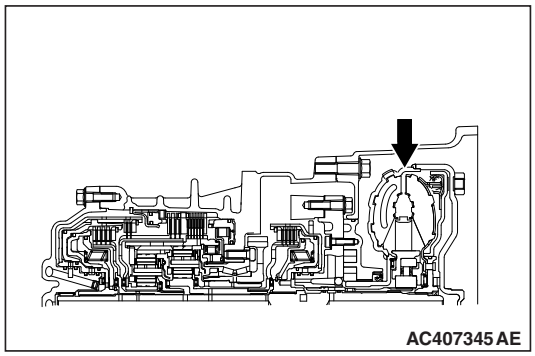

STEP 4. Replace the torque converter assembly.

(1) Remove the transaxle.

(2) Replace the torque converter assembly. Refer to GROUP 23B, Transaxle P.23B-8 <4A/T> or GROUP 23C, Transaxle P.23C-8 <5A/T>. Then check the symptom.

Q: Is the symptom eliminated?

YES : The procedure is complete.

NO : Go to Step 6.

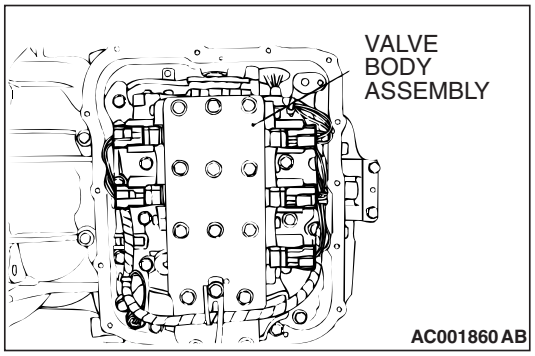

STEP 5. Disassemble and clean the valve body.

Check the O-ring installation bolts for looseness and the valve body for damage. Repair or replace the faulty parts. Refer to GROUP 23B, Valve Body P.23B-65 <4A/T> or GROUP 23C, Valve Body P.23C-73 <5A/T>.

Replace the valve body assembly if the damages are thought to be irreparable. Then check the symptom.

Q: Is the symptom eliminated?

YES : The procedure is complete.

NO : Go to Step 6.

STEP 6. Replace the PCM.

When the PCM is replaced, register the encrypted code. Refer to GROUP 54A, Encrypted Code Registration Criteria Table P.54A-19.

Q: Is the symptom eliminated?

YES : The procedure is complete.

NO : Start over at Step 1.

INSPECTION PROCEDURE 15: Shift Switch Assembly System

Shift Switch Assembly System Circuit

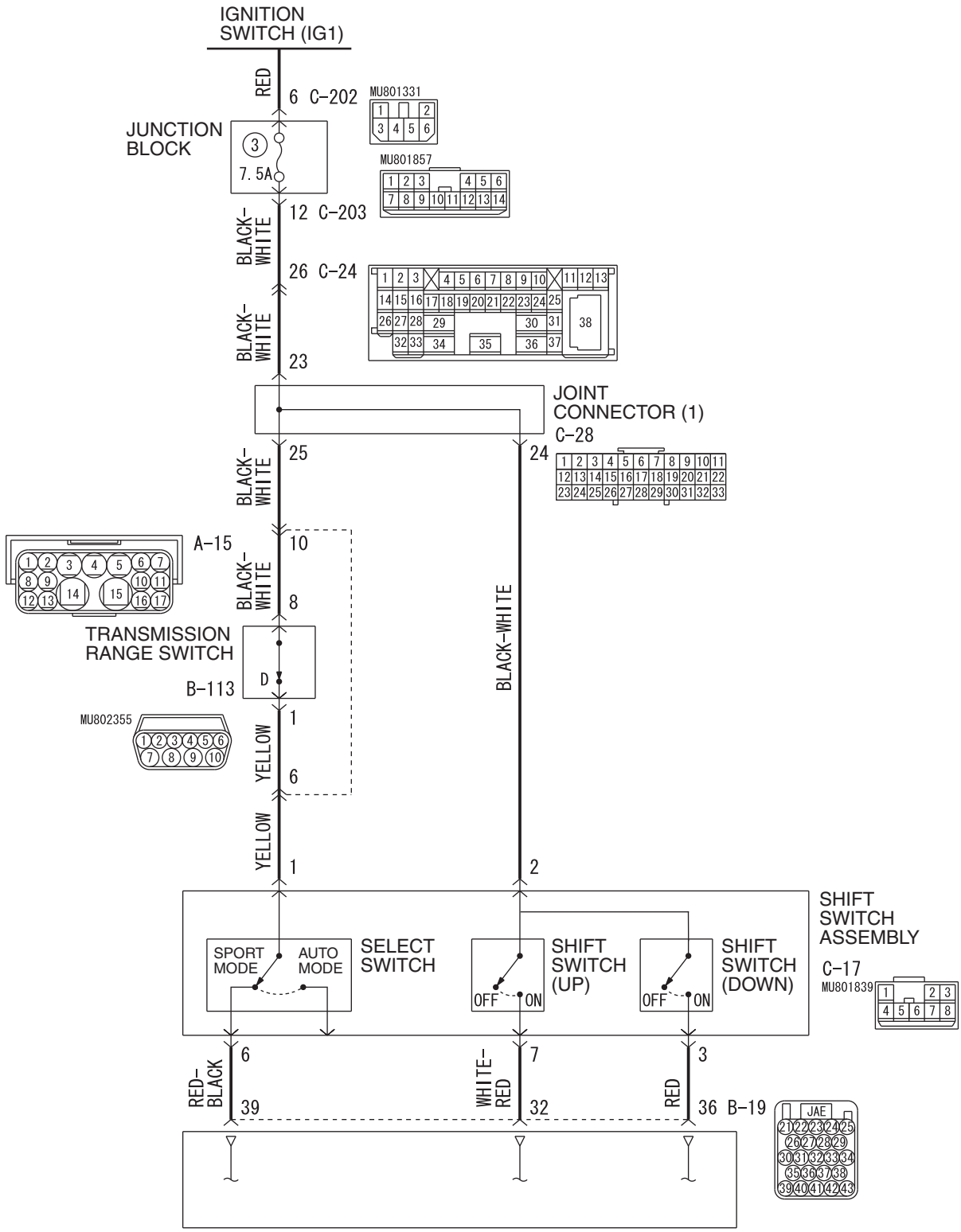

AC808357AB

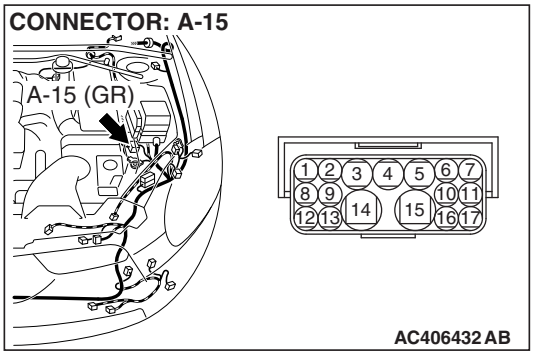
CONNECTOR: A-15
A-15 (GR)
1 2 3 4 5 6 7
8 9 10 11
12 13 14 15 16 17
AC406432 AB

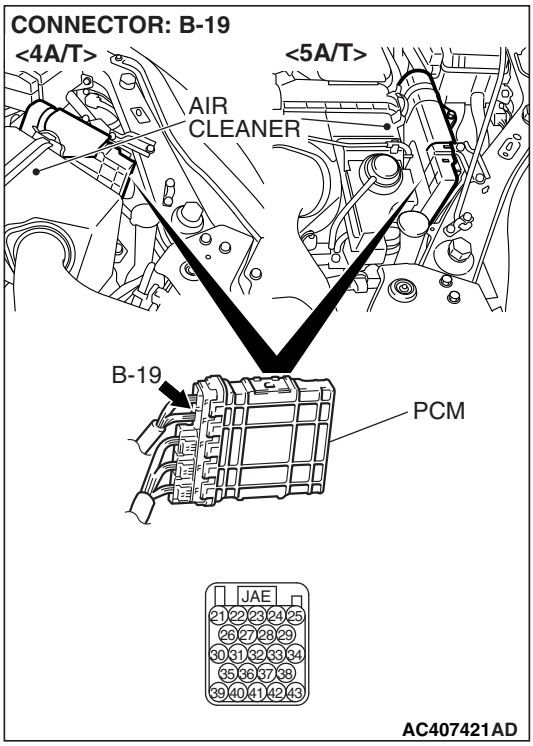
CONNECTOR: B-19
<4A/T>
<5A/T>
AIR CLEANER
B-19
PCM
JAE
21 22 23 24 25
26 27 28 29
30 31 32 33 34
35 36 37 38
39 40 41 42 43
AC407421AD

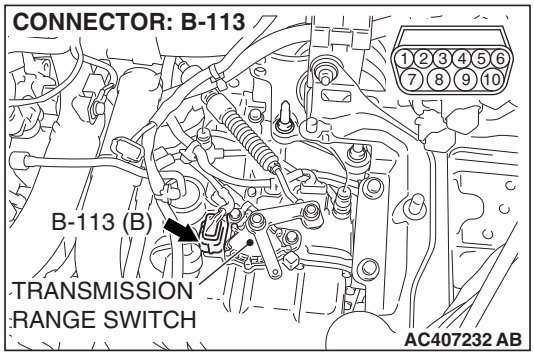
CONNECTOR: B-113
1 2 3 4 5 6
7 8 9 10
B-113 (B)
TRANSMISSION RANGE SWITCH
AC407232 AB

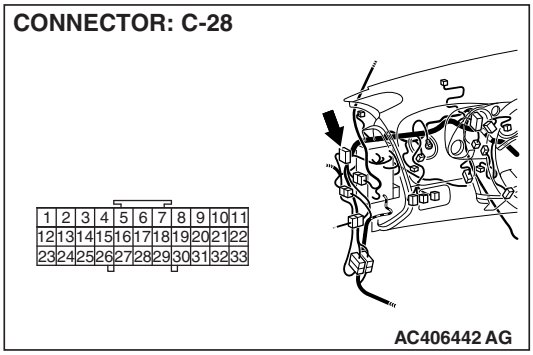
CONNECTOR: C-28
1 2 3 4 5 6 7 8 9 10 11
12 13 14 15 16 17 18 19 20 21 22
23 24 25 26 27 28 29 30 31 32 33
AC406442 AG

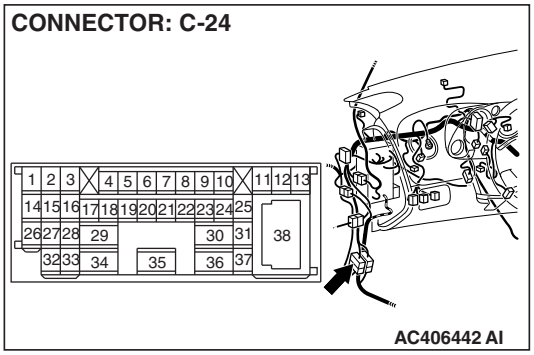
CONNECTOR: C-24
1 2 3 4 5 6 7 8 9 10 11 12 13
14 15 16 17 18 19 20 21 22 23 24 25
26 27 28 29 30 31
32 33 34 35 36 37
38
AC406442 AI

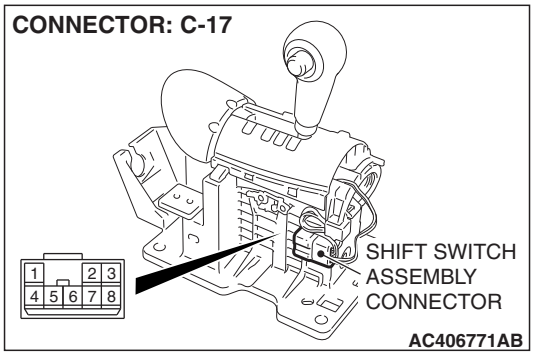
CONNECTOR: C-17
1 2 3
4 5 6 7 8
SHIFT SWITCH ASSEMBLY CONNECTOR
AC406771AB

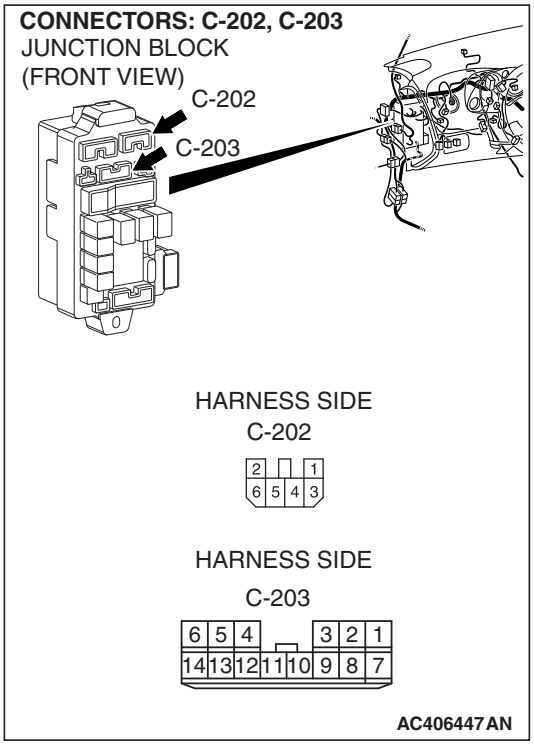

CIRCUIT OPERATION

If the select switch of the shift switch assembly is set to the sport mode, battery positive voltage will be applied to the PCM (terminal 39). If the shift switch of the shift switch assembly is set to "UP" or "DOWN" position, battery positive voltage will be applied to the PCM (terminal 32, 36).

COMMENT

When sport mode shift does not operate the cause is probably a malfunction of the transmission range switch circuit, shift switch assembly circuit or a defective PCM.

TROUBLESHOOTING HINTS (THE MOST LIKELY CAUSES FOR THIS CASE:)

- Malfunction of the transmission range switch
- Malfunction of the shift switch assembly select switch
- Malfunction of the shift switch assembly shift switch (Up)
- Malfunction of the shift switch assembly shift switch (Down)
- Damaged harness or connector
- Malfunction of the PCM

DIAGNOSIS

Required Special Tools:

- MB991958: Scan Tool (M.U.T.-III Sub Assembly)
  - MB991824: V.C.I.
  - MB991827: M.U.T.-III USB Cable
  - MB991910: M.U.T.-III Main Harness A

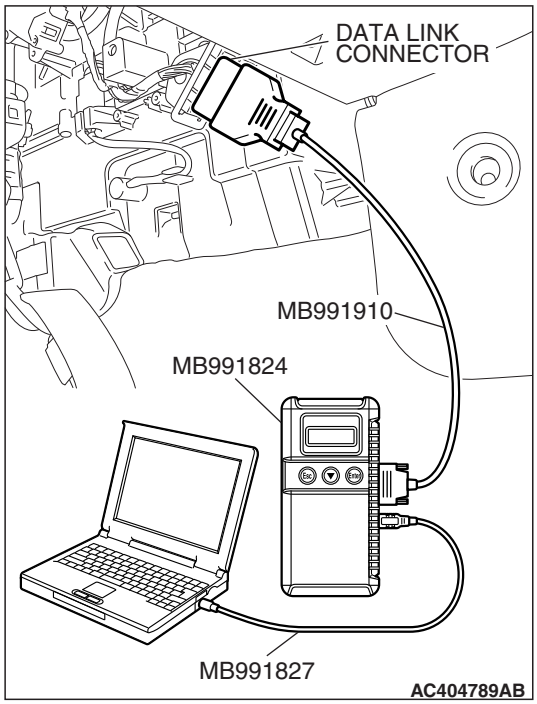

STEP 1. Using scan tool MB991958, read the A/T diagnostic trouble code.

⚠ CAUTION

To prevent damage to scan tool MB991958, always turn the ignition switch to the "LOCK" (OFF) position before connecting or disconnecting scan tool MB991958.

(1) Connect scan tool MB991958 to the data link connector.
(2) Turn the ignition switch to the "ON" position.
(3) Check for A/T diagnostic trouble code.
(4) Turn the ignition switch to the "LOCK" (OFF) position.

Q: Is DTC P1770 (P0705) or P1771 (P0705) set?

YES <DTC P1770 (P0705) set> : Refer to P.23A-143, DTC P1770 (P0705): Transmission Range Switch System (Open Circuit).

YES <DTC P1771 (P0705) set> : Refer to P.23A-172, DTC P1771 (P0705): Transmission Range Switch System (Short Circuit).

NO : Go to Step 2.

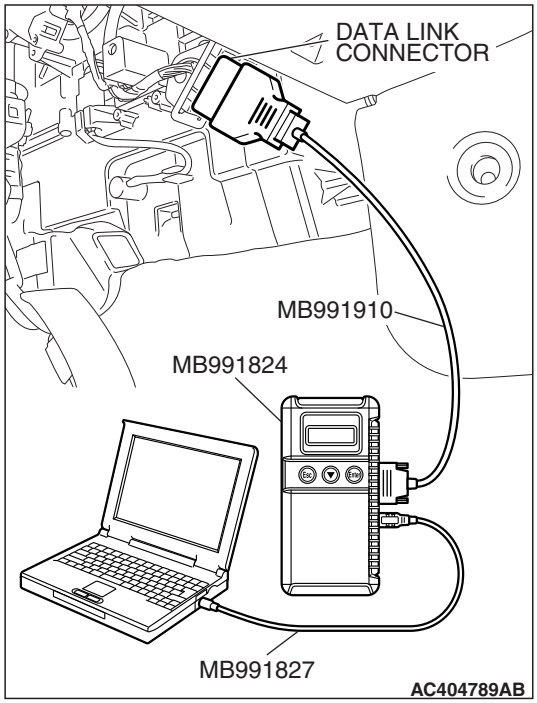

STEP 2. Using scan tool MB991958, check data list item 27: Select Switch, item 28: Shift Switch (Up), item 29: Shift Switch (Down).

(1) Connect scan tool MB991958 to the data link connector.
(2) Turn the ignition switch to the "ON" position.
(3) Set scan tool MB991958 to the data reading mode for following items.
  a. Item 27: Select Switch
  b. Item 28: Shift Switch (Up)
  c. Item 29: Shift Switch (Down)

SELECTOR LEVER OPERATION	DATA LIST ITEM		
	27	28	29
D range	OFF	OFF	OFF
Sport mode	ON	OFF	OFF
Upshift and hold the selector lever	ON	ON	OFF
Downshift and hold the selector lever	ON	OFF	ON

NOTE: The switches above are displayed, depending on the selector lever condition as shown in the table.

(4) Turn the ignition switch to the "LOCK" (OFF) position.

Q: Is the switch operating properly?

YES : It can be assumed that this malfunction is intermittent. Refer to GROUP 00, How to Use Troubleshooting/Inspection Service Points – How to Cope with Intermittent Malfunction P.00-14.

NO <If completely NG> : Go to Step 3.
NO <If item 28 and item 29 both are NG> : Go to Step 5.
NO <If only item 27 is NG> : Go to Step 9.
NO <If only item 28 is NG> : Go to Step 17.
NO <If only item 29 is NG> : Go to Step 22.

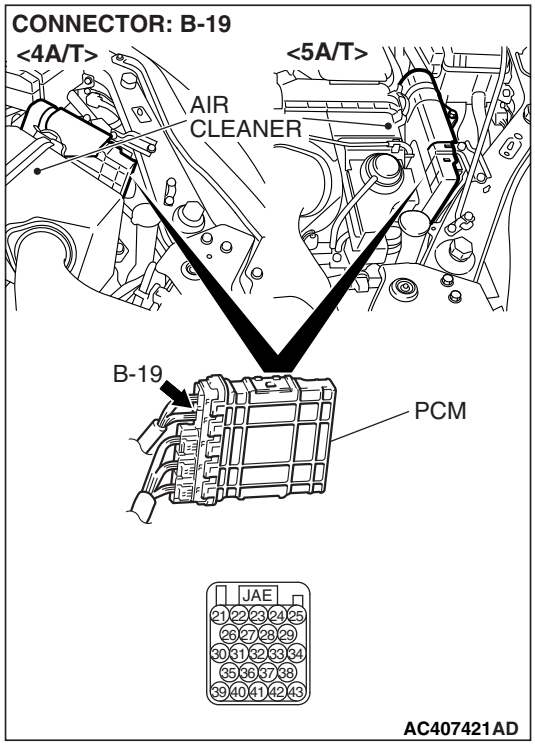

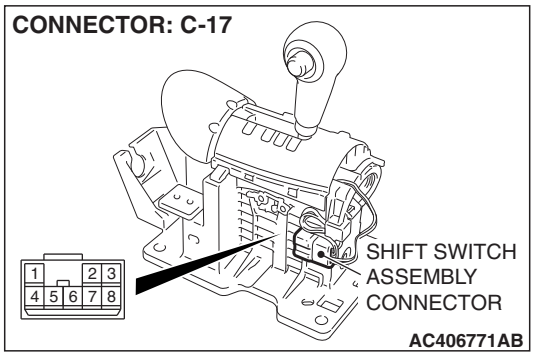

STEP 3. Check PCM connector B-19 and shift switch assembly connector C-17 for loose, corroded or damaged terminals, or terminals pushed back in the connector.

Q: Are the connectors in good condition?

YES : Go to Step 4.

NO : Repair or replace the damaged components. Refer to GROUP 00E, Harness Connector Inspection P.00E-2.

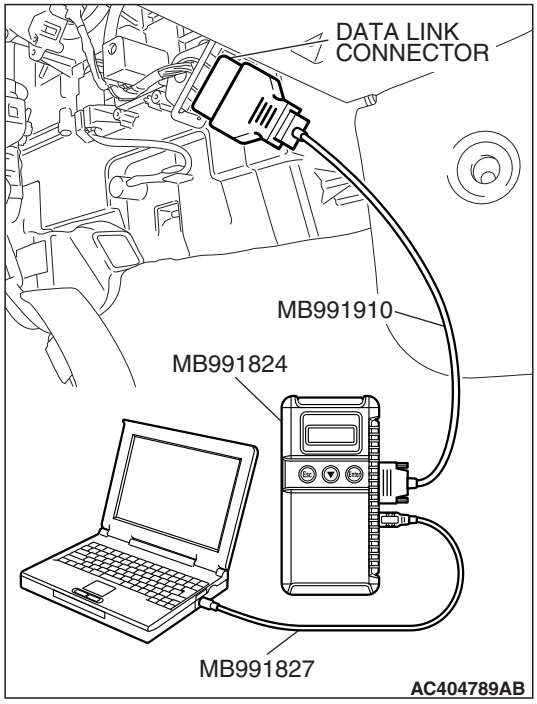

STEP 4. Using scan tool MB991958, check data list item 27: Select Switch, item 28: Shift Switch (Up), item 29: Shift Switch (Down).

⚠ CAUTION

To prevent damage to scan tool MB991958, always turn the ignition switch to the "LOCK" (OFF) position before connecting or disconnecting scan tool MB991958.

(1) Connect scan tool MB991958 to the data link connector.
(2) Turn the ignition switch to the "ON" position.
(3) Set scan tool MB991958 to the data reading mode for following items.
  a. Item 27: Select Switch
  b. Item 28: Shift Switch (Up)
  c. Item 29: Shift Switch (Down)

SELECTOR LEVER OPERATION	DATA LIST ITEM		
	27	28	29
D range	OFF	OFF	OFF
Sport mode	ON	OFF	OFF
Upshift and hold the selector lever	ON	ON	OFF
Downshift and hold the selector lever	ON	OFF	ON

NOTE: The switches above are displayed, depending on the selector lever condition as shown in the table.

(4) Turn the ignition switch to the "LOCK" (OFF) position.

Q: Is the switch operating properly?

YES : It can be assumed that this malfunction is intermittent. Refer to GROUP 00, How to Use Troubleshooting/Inspection Service Points – How to Cope with Intermittent Malfunction P.00-14.

NO : Replace the PCM. When the PCM is replaced, register the encrypted code. Refer to GROUP 54A, Encrypted Code Registration Criteria Table P.54A-19.

STEP 5. Check the shift switch assembly.

Refer to P.23A-406, Transaxle Control.

Q: Is the switch operating properly?

YES : Go to Step 6.

NO : Replace the shift switch assembly. Refer to P.23A-404, Transaxle Control.

STEP 6. Measure the power supply voltage at shift switch assembly connector C-17.

(1) Disconnect connector C-17 and measure at the harness side.
(2) Turn the ignition switch to the "ON" position.

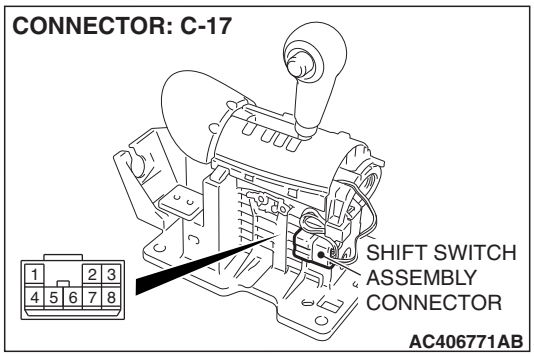

(3) Measure the voltage between terminal 2 and ground.
- The voltage should measure battery positive voltage.

(4) Turn the ignition switch to the "LOCK" (OFF) position.

Q: Is the measured voltage battery positive voltage?

YES : Go to Step 4.
NO : Go to Step 7.

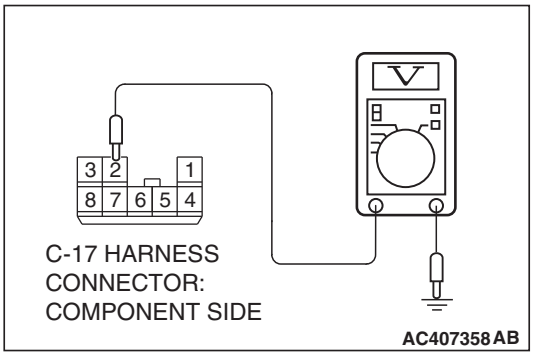

STEP 7. Check joint connector (1) C-28 and shift switch assembly connector C-17 for loose, corroded or damaged terminals, or terminals pushed back in the connector.

Q: Are the connectors and terminals in good condition?

YES : Go to Step 8.
NO : Repair or replace the damaged components. Refer to GROUP 00E, Harness Connector Inspection P.00E-2.

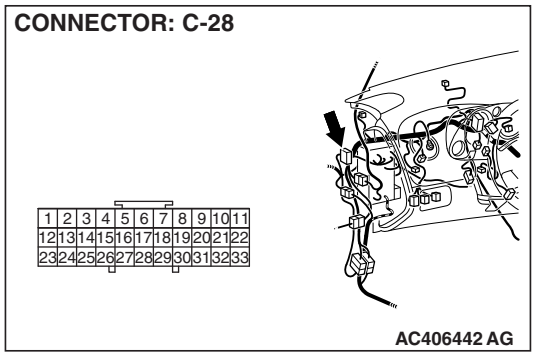

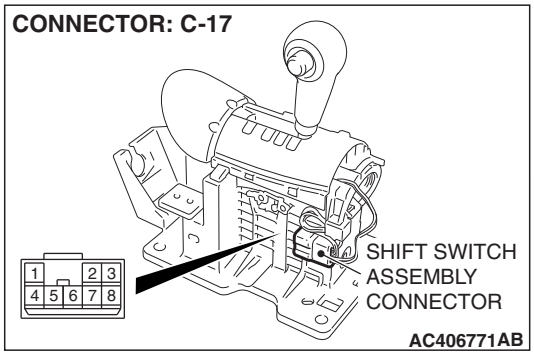

STEP 8. Check the harness for open circuit or short circuit to ground between joint connector (1) C-28 terminal 24 and shift switch assembly connector C-17 terminal 2.

Q: Is the harness wire in good condition?

YES : Go to Step 4.

NO : Repair or replace the harness wire.

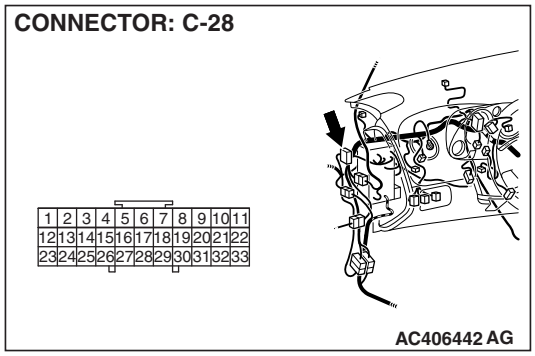

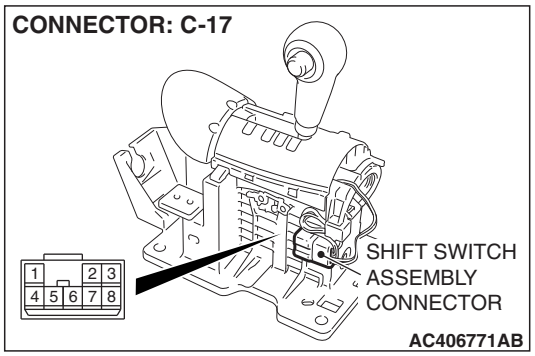

STEP 9. Measure the power supply voltage at shift switch assembly connector C-17.

(1) Disconnect connector C-17 and measure at the harness side.

(2) Turn the ignition switch to the "ON" position.

(3) Move the selector lever to the "D" position.

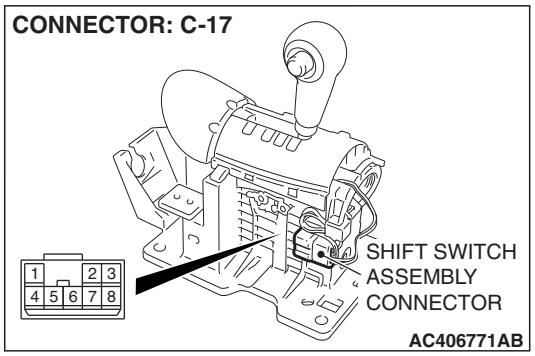

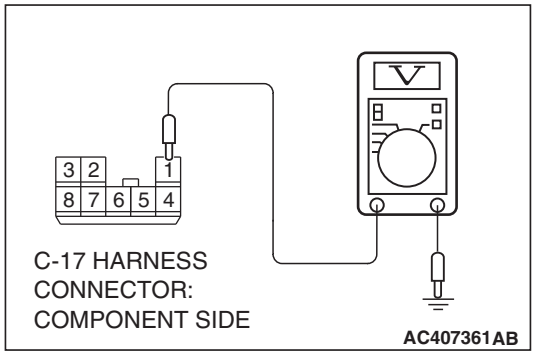

(4) Measure the voltage between terminal 1 and ground.
- The voltage should measure battery positive voltage.

(5) Turn the ignition switch to the "LOCK" (OFF) position.

Q: Is the measured voltage battery positive voltage?

YES : Go to Step 12.

NO : Go to Step 10.

STEP 10. Check intermediate connector A-15 and shift switch assembly connector C-17 for loose, corroded or damaged terminals, or terminals pushed back in the connector.

Q: Are the connector and terminals in good condition?

YES : Go to Step 11.

NO : Repair or replace the damaged components. Refer to GROUP 00E, Harness Connector Inspection P.00E-2.

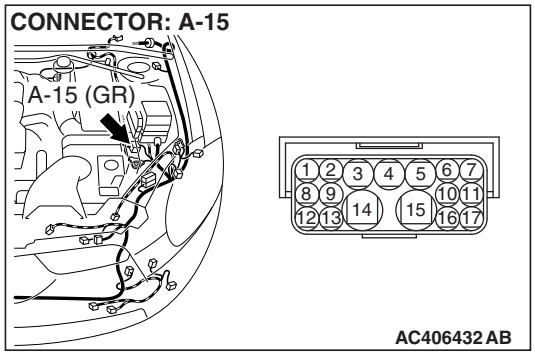

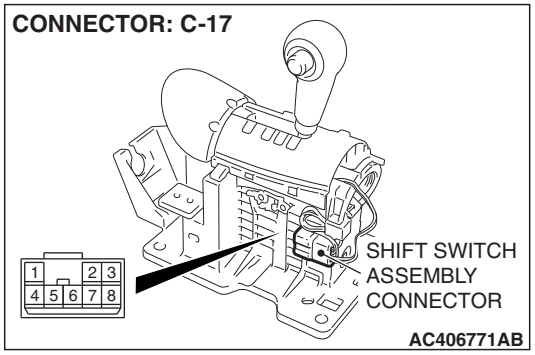

STEP 11. Check harness for open circuit or short circuit to ground between transmission range switch connector B-113 terminal 1 and shift switch assembly connector C-17 terminal 1.

Q: Is the harness wire in good condition?

YES : Go to Step 4.

NO : Repair or replace the harness wire.

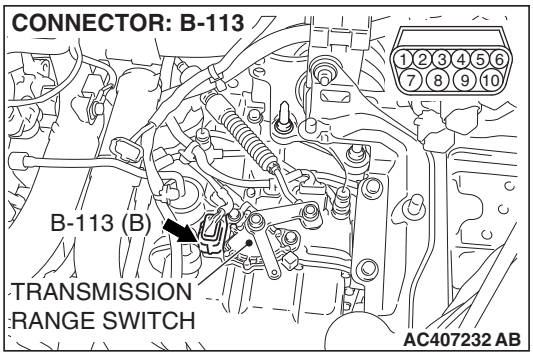

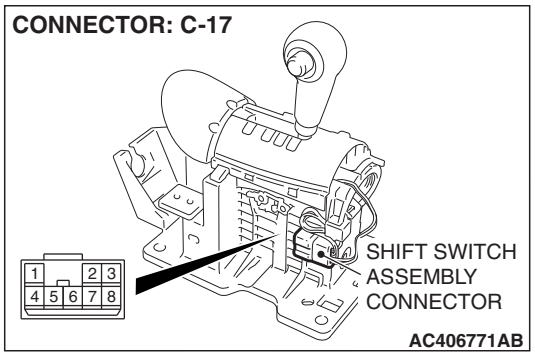

STEP 12. Check the shift switch assembly.

Refer to P.23A-406, Transaxle Control.

Q: Is the switch operating properly?

YES : Go to Step 13.

NO : Replace the shift switch assembly. Refer to P.23A-404, Transaxle Control.

STEP 13. Measure the shift switch output voltage at PCM connector B-19 by using check harness special tool MB991923.

(1) Disconnect all the connectors from the PCM.

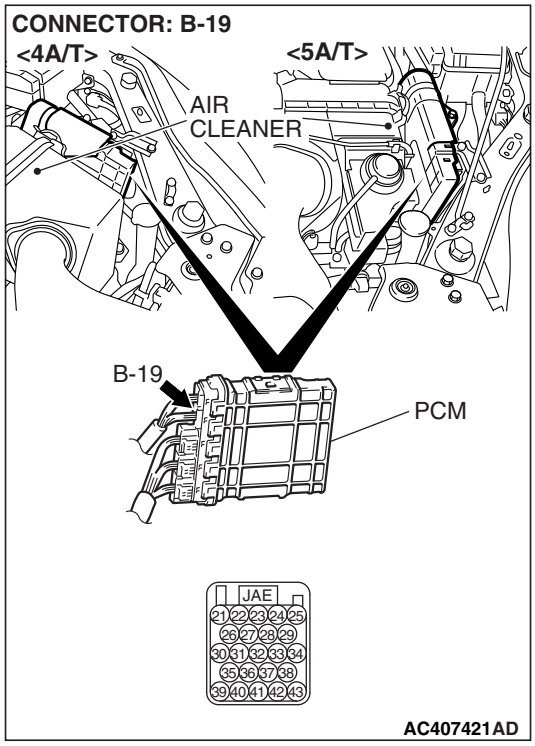

(2) Connect special tool MB991923 (check harness) between the PCM and the body-side harness connector.
(3) Turn the ignition switch to the "ON" position.
(4) Move the selector lever to the sport mode.

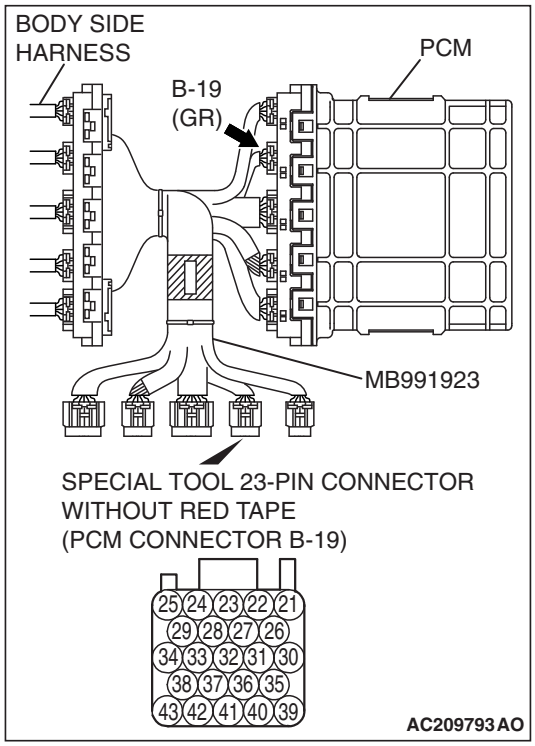

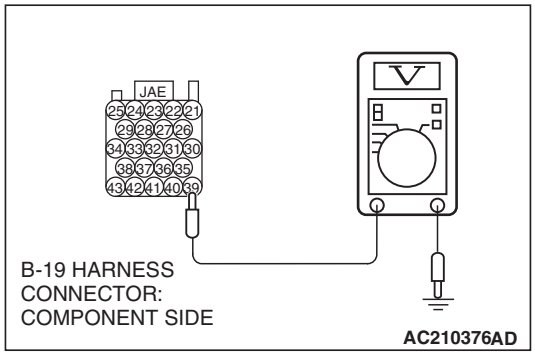

(5) Measure the voltage between terminal 39 and ground.
- The voltage should measure battery positive voltage.

(6) Turn the ignition switch to the "LOCK" (OFF) position.

Q: Is the measured voltage battery positive voltage?

YES : Go to Step 16.
NO : Go to Step 14.

STEP 14. Check PCM connector B-19 and shift switch assembly connector C-17 for loose, corroded or damaged terminals, or terminals pushed back in the connector.

Q: Are the connectors and terminals in good condition?

YES : Go to Step 15.
NO : Repair or replace the damaged components. Refer to GROUP 00E, Harness Connector Inspection P.00E-2.

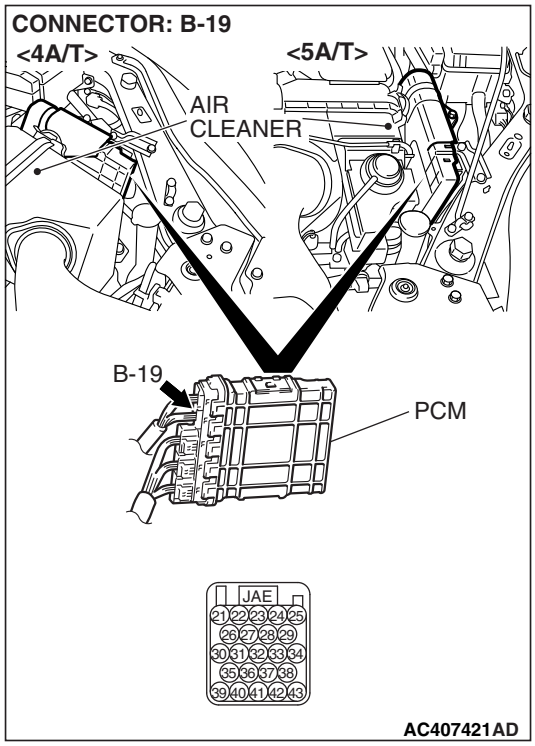

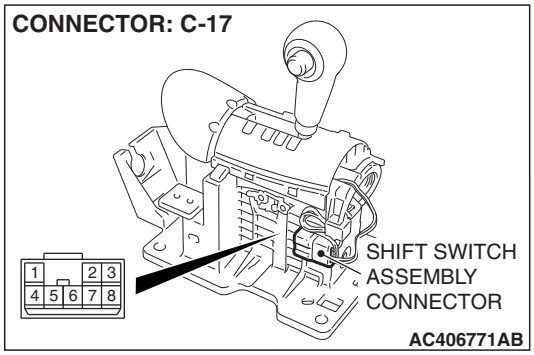

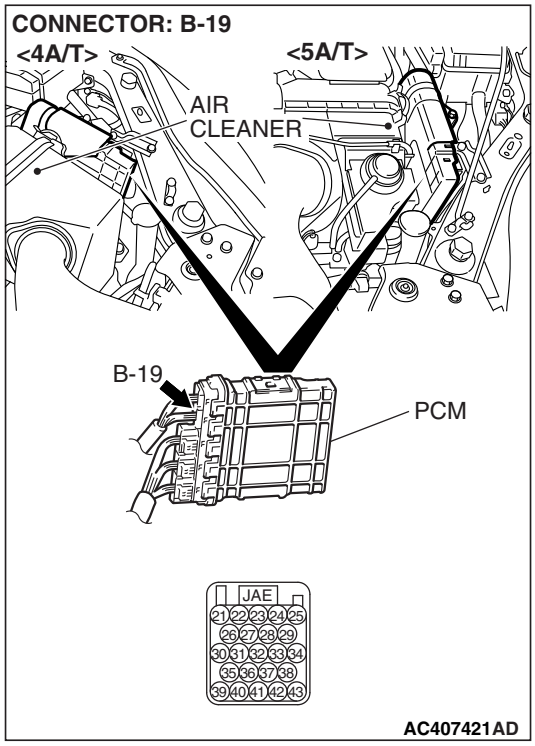

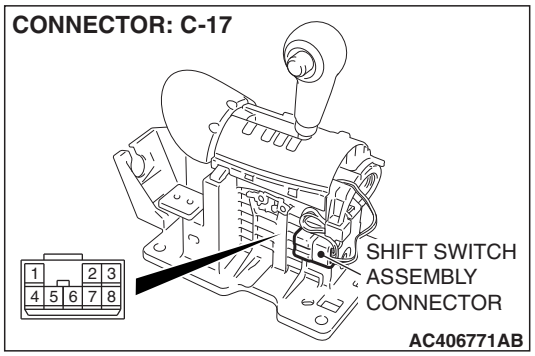

STEP 15. Check the harness for open circuit or short circuit to ground between PCM connector B-19 terminal 39 and shift switch assembly connector C-17 terminal 6.

Q: Is the harness wire in good condition?

YES : Go to Step 4.

NO : Repair or replace the harness wire.

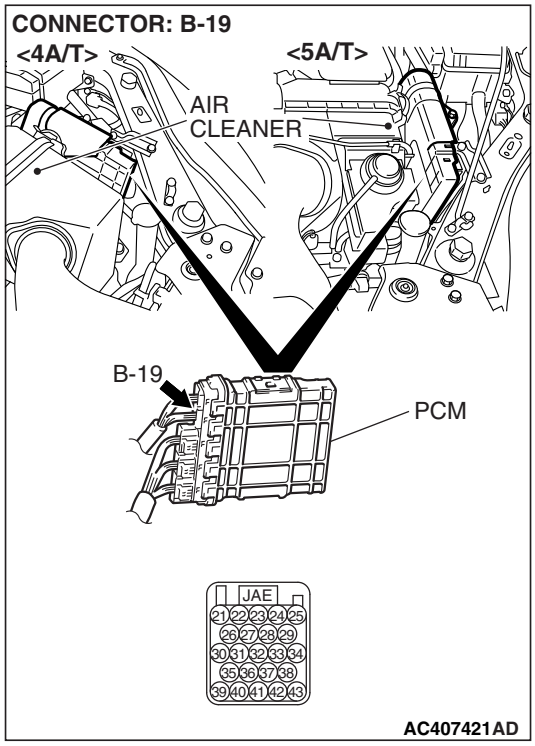

STEP 16. Check PCM connector B-19 for loose, corroded or damaged terminals, or terminals pushed back in the connector.

Q: Are the connector and terminals in good condition?

YES : Go to Step 4.

NO : Repair or replace the damaged components. Refer to GROUP 00E, Harness Connector Inspection P.00E-2.

STEP 17. Check the shift switch assembly.

Refer to P.23A-406, Transaxle Control.

Q: Is the switch operating properly?

YES : Go to Step 18.

NO : Replace the shift switch assembly. Refer to P.23A-404, Transaxle Control.

STEP 18. Measure the switch output voltage at PCM connector B-19 by using check harness special tool MB991923.

(1) Disconnect all the connectors from the PCM.

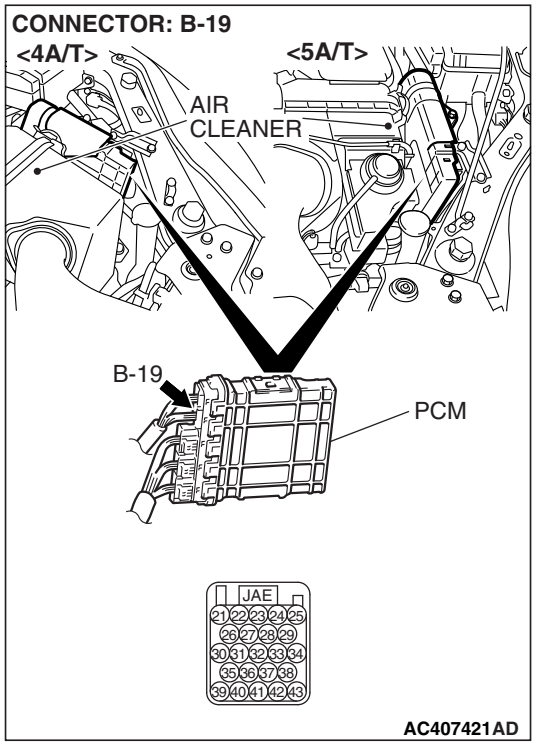

(2) Connect special tool MB991923 (check harness) between the PCM and the body-side harness connector.
(3) Turn the ignition switch to the "ON" position.

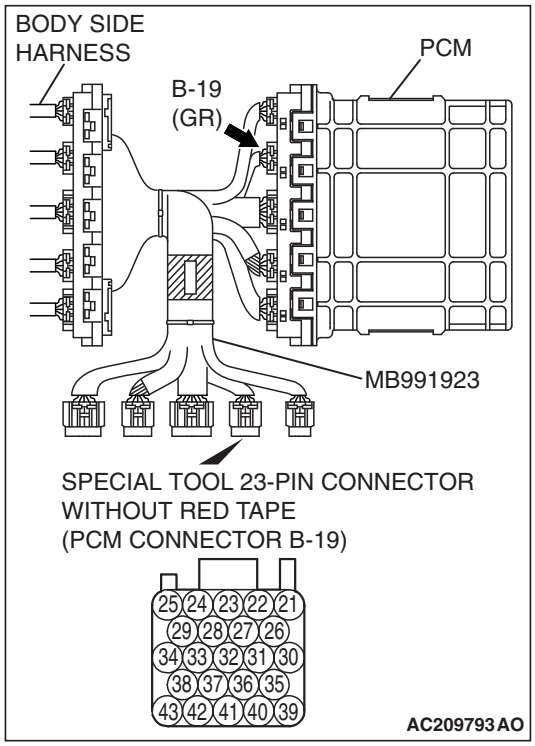

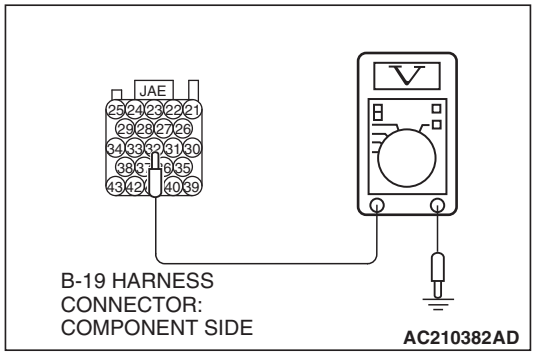

(4) Measure the voltage between terminal 32 and ground.
- The voltage should measure battery positive voltage when the selector lever is upshift and hold.

(5) Turn the ignition switch to the "LOCK" (OFF) position.

Q: Is the measured voltage battery positive voltage?

YES : Go to Step 21.
NO : Go to Step 19.

STEP 19. Check PCM connector B-19 and shift switch assembly connector C-17 for loose, corroded or damaged terminals, or terminals pushed back in the connector.

Q: Are the connectors and terminals in good condition?

YES : Go to Step 20.
NO : Repair or replace the damaged components. Refer to GROUP 00E, Harness Connector Inspection P.00E-2.

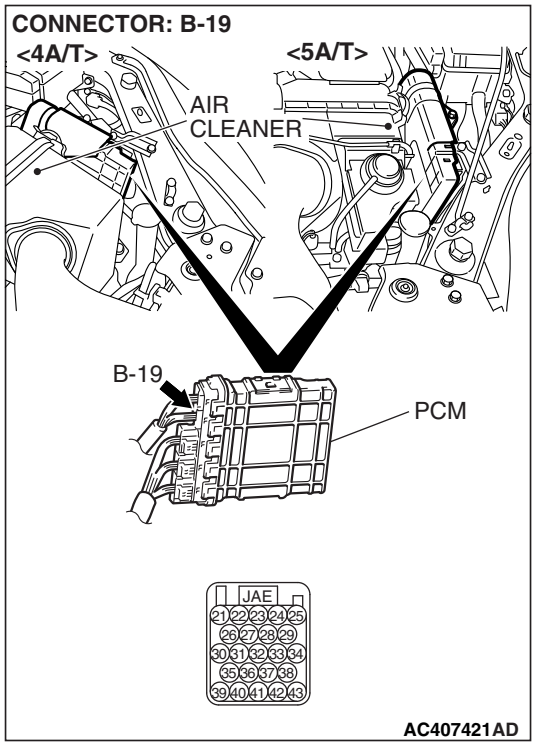

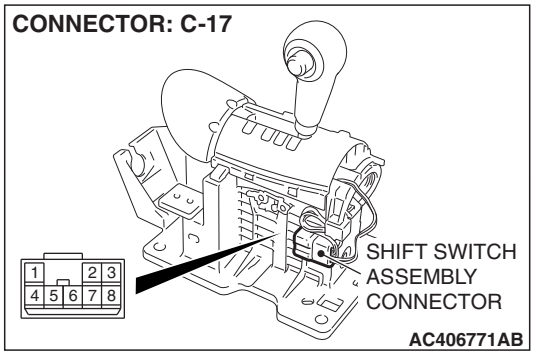

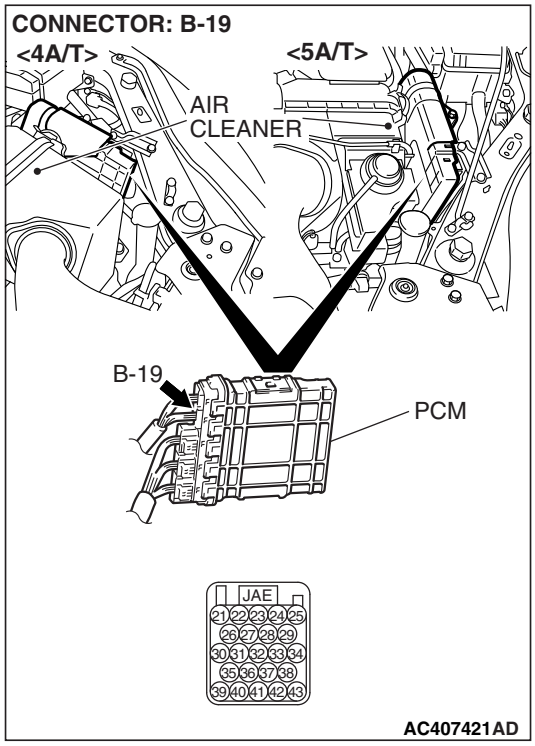

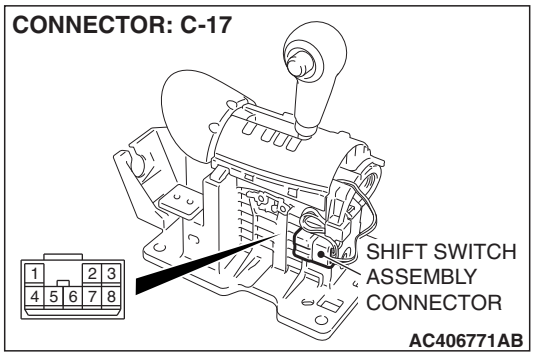

STEP 20. Check the harness for open circuit or short circuit to ground between PCM connector B-19 terminal 32 and shift switch assembly connector C-17 terminal 7.

Q: Is the harness wire in good condition?

YES : Go to Step 4.

NO : Repair or replace the harness wire.

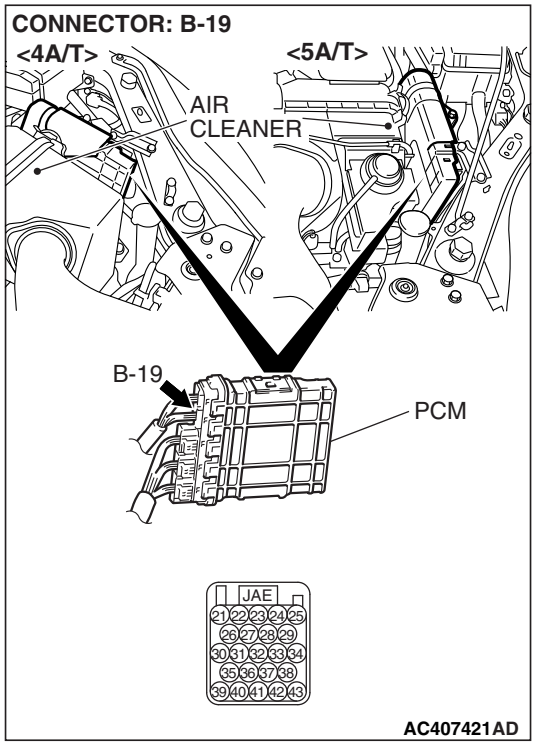

STEP 21. Check PCM connector B-19 for loose, corroded or damaged terminals, or terminals pushed back in the connector.

Q: Are the connector and terminals in good condition?

YES : Go to Step 4.

NO : Repair or replace the damaged components. Refer to GROUP 00E, Harness Connector Inspection P.00E-2.

STEP 22. Check the shift switch assembly.

Refer to P.23A-406, Transaxle Control.

Q: Is the switch operating properly?

YES : Go to Step 23.

NO : Replace the shift switch assembly. Refer to P.23A-404, Transaxle Control.

STEP 23. Measure the switch output voltage at PCM connector B-19 by using check harness special tool MB991923.

(1) Disconnect all the connectors from the PCM.

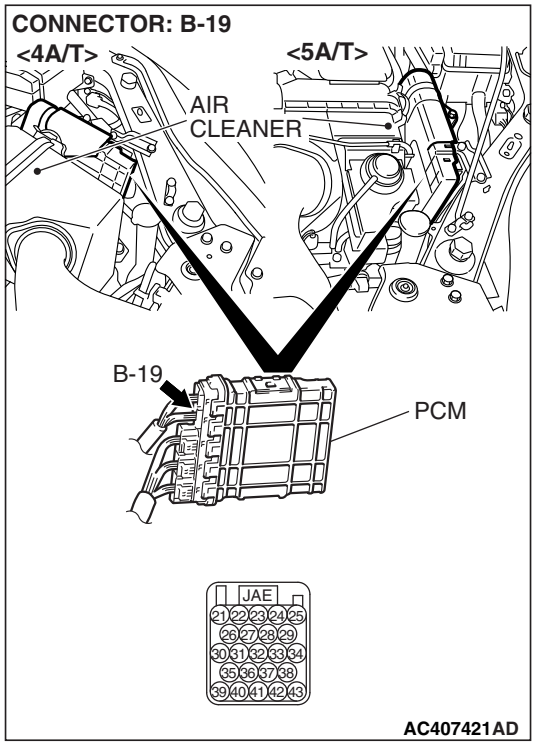

(2) Connect special tool MB991923 (check harness) between the PCM and the body-side harness connector.
(3) Turn the ignition switch to the "ON" position.

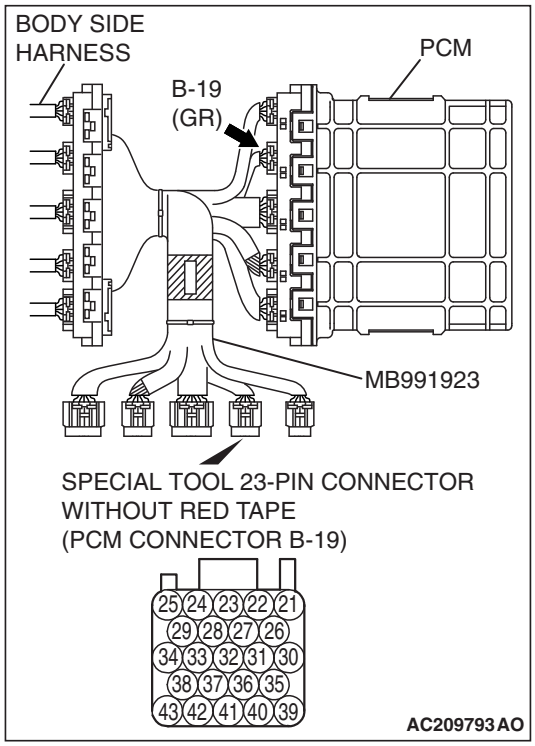

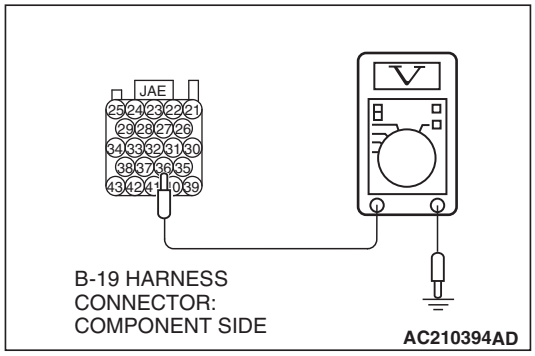

(4) Measure the voltage between terminal 36 and ground.
- The voltage should measure battery positive voltage when the selector lever is downshift and hold.

(5) Turn the ignition switch to the "LOCK" (OFF) position.

Q: Is the measured voltage battery positive voltage?

YES : Go to Step 26.
NO : Go to Step 24.

STEP 24. Check PCM connector B-19 and shift switch assembly connector C-17 for loose, corroded or damaged terminals, or terminals pushed back in the connector.

Q: Are the connectors and terminals in good condition?

YES : Go to Step 25.
NO : Repair or replace the damaged components. Refer to GROUP 00E, Harness Connector Inspection P.00E-2.

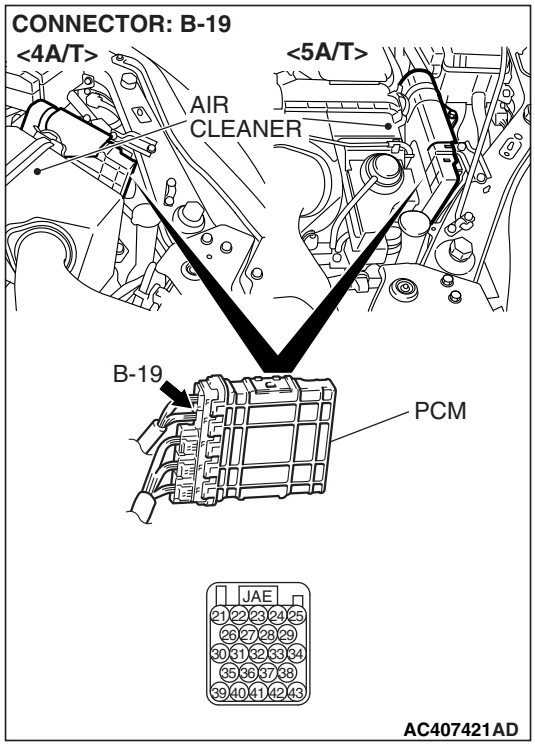

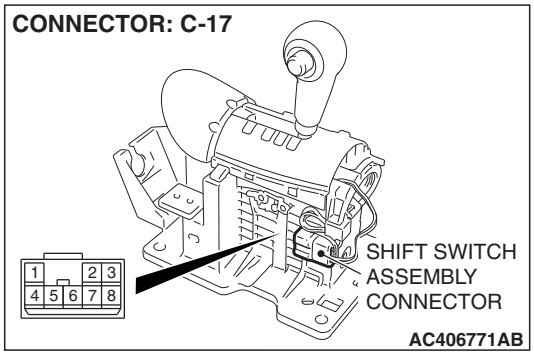

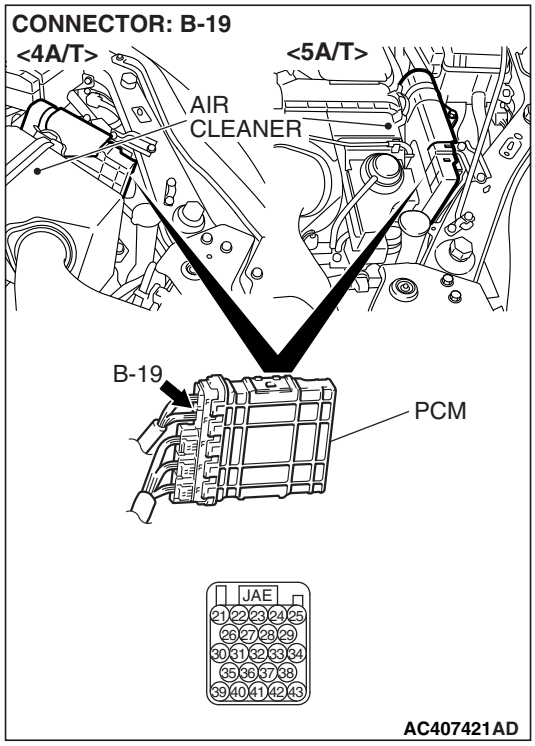

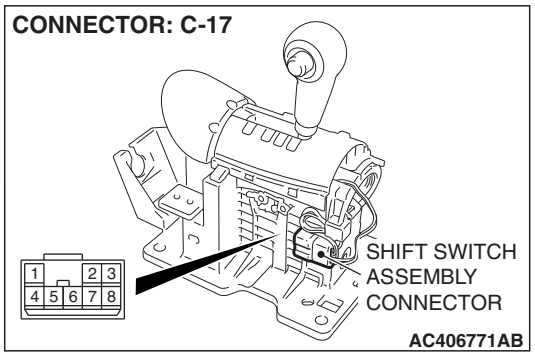

STEP 25. Check the harness for open circuit or short circuit to ground between PCM connector B-19 terminal 36 and shift switch assembly connector C-17 terminal 3.

Q: Is the harness wire in good condition?

YES : Go to Step 4.

NO : Repair or replace the harness wire.

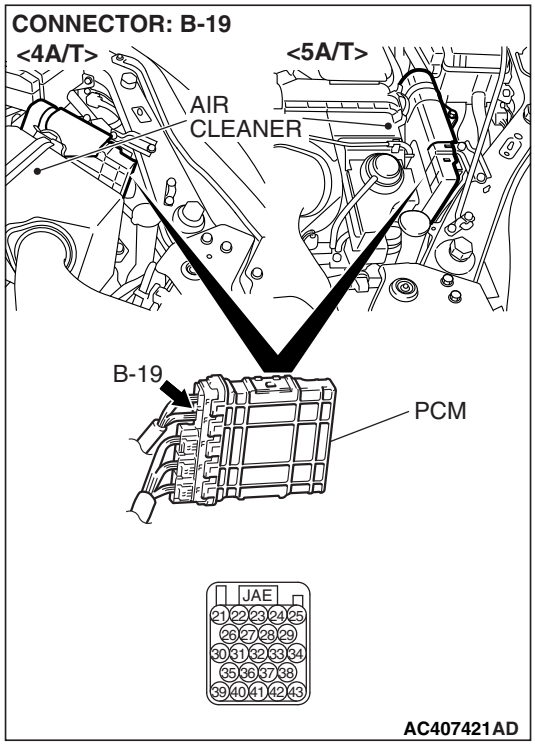

STEP 26. Check PCM connector B-19 for loose, corroded or damaged terminals, or terminals pushed back in the connector.

Q: Are the connector and terminals in good condition?

YES : Go to Step 4.

NO : Repair or replace the damaged components. Refer to GROUP 00E, Harness Connector Inspection P.00E-2.

INSPECTION PROCEDURE 16: Selector Lever Position Indicator Light System

OPERATION

- The PCM detects the transmission range (P, R, N D, sport mode 4, 3, 2, or 1), and display it on the combination meter.

COMMENT

Connector(s), wiring harness in the CAN bus line between the PCM and the combination meter, power supply to the PCM, the combination meter, the PCM may be defective.

TROUBLESHOOTING HINTS (THE MOST LIKELY CAUSES FOR THIS CONDITION:)

- Malfunction of the combination meter
- Damaged harness, connector
- Malfunction of the PCM

DIAGNOSIS

Required Special Tools:

- MB991958: Scan Tool (M.U.T.-III Sub Assembly)
  - MB991824: V.C.I.
  - MB991827: USB Cable
  - MB991910: Main Harness A

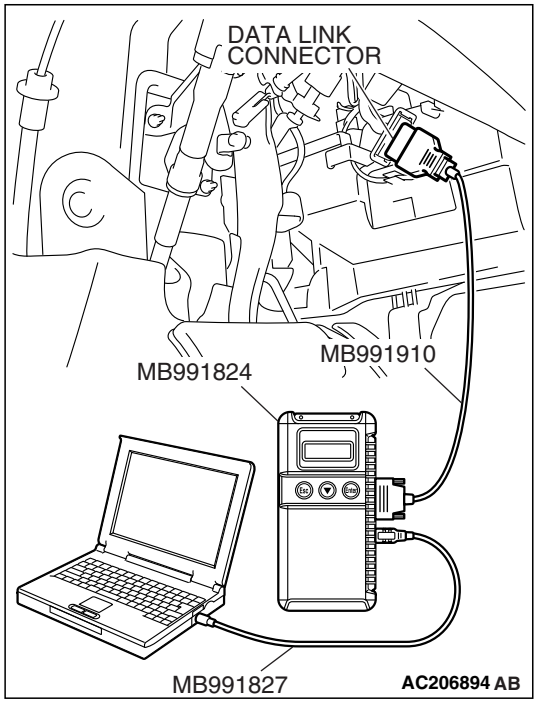

STEP 1. Using scan tool MB991958, diagnose the CAN bus line.

⚠ CAUTION

To prevent damage to scan tool MB991958, always turn the ignition switch to the "LOCK" (OFF) position before connecting or disconnecting scan tool MB991958.

Use scan tool MB991958 to diagnose the CAN bus lines.

(1) Connect scan tool MB991958 to the data link connector.
(2) Turn the ignition switch to the "ON" position.
(3) Diagnose the CAN bus line.
(4) Turn the ignition switch to the "LOCK" (OFF) position.

Q: Is the check result OK?

YES : Go to Step 2.

NO : Repair the CAN bus lines (Refer to GROUP 54C, Diagnosis-CAN Bus Diagnostic Chart P.54C-17).

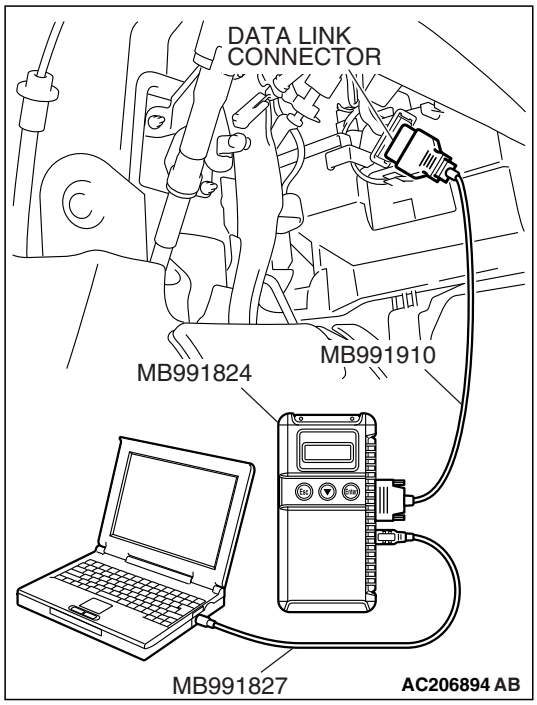

STEP 2. Using scan tool MB991958, read the MFI diagnostic trouble code.

⚠ CAUTION

To prevent damage to scan tool MB991958, always turn the ignition switch to the "LOCK" (OFF) position before connecting or disconnecting scan tool MB991958.

(1) Connect scan tool MB991958 to the data link connector.
(2) Turn the ignition switch to the "ON" position.
(3) Check for MFI diagnostic trouble code.
(4) Turn the ignition switch to the "LOCK" (OFF) position.

Q: Is DTC U1108 set?

YES : Refer to GROUP54A P.54A-84 DTC U1101: Combination Meter-ECU CAN Communication Time Out

NO : Replace the PCM. When the PCM is replaced, register the encrypted code. Refer to GROUP 54A, Encrypted Code Registration Criteria Table P.54A-19.

DATA LIST REFERENCE TABLE

M1231008100519

ITEM NO.	INSPECTION ITEM	INSPECTION REQUIREMENT		NORMAL CONDITION
8	A/T control relay output voltage	Ignition switch: ON		Battery positive voltage
3	Engine load	• Engine: Idling • Transmission range: P, N	Accelerator pedal: Release → depressed	Data changes
1	Engine speed	• Engine: Idling (after the warming up) • Transmission range: P	Accelerator pedal: Release	600 – 900 r/min
			Accelerator pedal: Depressed	Gradually rises from the above value
21	Dual pressure switch	• Engine: Idling • Transmission range: P, N	A/C switch: ON (while the A/C compressor is in operation)	ON
			A/C switch: OFF	OFF
33	INVECS-II control stop	Ignition switch: ON	Cancel INVECS-II.	ON
			Release INVECS-II cancel command.	OFF
5	Input shaft speed sensor	Gear range: 3rd <4A/T> or 4th <5A/T> gear	Driving at constant speed of 50 km/h (31 mph) <4A/T> or 60 km/h (37mph) <5A/T>	1,500 – 1,800 r/min <4A/T> 1,400 – 1,700 r/min <5A/T>
12	Low-reverse solenoid valve duty	Transmission range: Sport mode	Driving at constant speed of 10 km/h (6.2 mph) in 1st gear	0%
			Driving at constant speed of 30 km/h (19 mph) in 2nd gear	100%
			Driving at constant speed of 50 km/h (31 mph) in 3rd gear	100%
			Driving at constant speed of 60 km/h (37 mph) in 4th gear	100% <4A/T> 0% <5A/T>
			Driving at constant speed of 70 km/h (43 mph) in 5th gear <5A/T>	0%

ITEM NO.	INSPECTION ITEM	INSPECTION REQUIREMENT		NORMAL CONDITION
15	Overdrive solenoid valve duty	Transmission range: Sport mode	Driving at constant speed of 10 km/h (6.2 mph) in 1st gear	100%
			Driving at constant speed of 30 km/h (19 mph) in 2nd gear	100%
			Driving at constant speed of 50 km/h (31 mph) in 3rd gear	0%
			Driving at constant speed of 60 km/h (37 mph) in 4th gear	0%
			Driving at constant speed of 70 km/h (43 mph) in 5th gear <5A/T>	0%
22	Overdrive off signal	While auto-cruise is engaged	Level road	OFF
			Uphill grade	ON
6	Output shaft speed sensor	Gear range: 3rd <4A/T> or 4th <5A/T> gear	Driving at constant speed of 50 km/h (31 mph) <4A/T> or 60 km/h (37mph) <5A/T>	1,500 – 1,800 r/min <4A/T> 1,400 – 1,700 r/min <5A/T>
16	Reduction solenoid valve duty <5A/T>	Transmission range: Sport mode <5A/T>	Driving at constant speed of 10 km/h (6.2 mph) in 1st gear	0%
			Driving at constant speed of 30 km/h (19 mph) in 2nd gear	0%
			Driving at constant speed of 50 km/h (31 mph) in 3rd gear	0%
			Driving at constant speed of 60 km/h (37 mph) in 4th gear	100%
			Driving at constant speed of 70 km/h (43 mph) in 5th gear	100%

ITEM NO.	INSPECTION ITEM	INSPECTION REQUIREMENT		NORMAL CONDITION
14	Second solenoid valve duty	Transmission range: Sport mode	Driving at constant speed of 10 km/h (6.2 mph) in 1st gear	100%
			Driving at constant speed of 30 km/h (19 mph) in 2nd gear	0%
			Driving at constant speed of 50 km/h (31 mph) in 3rd gear	100%
			Driving at constant speed of 60 km/h (37 mph) in 4th gear	0% <4A/T> 100% <5A/T>
			Driving at constant speed of 70 km/h (43 mph) in 5th gear <5A/T>	0%
27	Select switch	Ignition switch: ON	Transmission range: D	OFF
			Selector lever operation: Select sport mode	ON
			Selector lever operation: Upshift and hold the selector lever	ON
			Selector lever operation: Downshift and hold the selector lever	ON
11	Shift position	Transmission range: Sport mode	Driving at constant speed of 10 km/h (6.2 mph) in 1st gear	1st
			Driving at constant speed of 30 km/h (19 mph) in 2nd gear	2nd
			Driving at constant speed of 50 km/h (31 mph) in 3rd gear	3rd
			Driving at constant speed of 60 km/h (37 mph) in 4th gear	4th
			Driving at constant speed of 70 km/h (43 mph) in 5th gear <5A/T>	5th
		Transmission range: R	Driving at constant speed of 5 km/h (3.1 mph) in reverse gear	REV
		Transmission range: P, N		NP

ITEM NO.	INSPECTION ITEM	INSPECTION REQUIREMENT		NORMAL CONDITION
29	Shift switch (Down)	Ignition switch: ON	Transmission range: D	OFF
			Selector lever operation: Select sport mode	OFF
			Selector lever operation: Upshift and hold the selector lever	OFF
			Selector lever operation: Downshift and hold the selector lever	ON
28	Shift switch (Up)	Ignition switch: ON	Transmission range: D	OFF
			Selector lever operation: Select sport mode	OFF
			Selector lever operation: Upshift and hold the selector lever	ON
			Selector lever operation: Downshift and hold the selector lever	OFF
19	Stoplight switch	Ignition switch: ON	Brake pedal: Depressed	ON
			Brake pedal: Released	OFF
10	Torque converter clutch amount of slippage	• Warmed up • Transmission range: Sport mode • Driving at speed of 60 km/h (37 mph) in 3rd gear	Driving at constant speed of 60 km/h (37 mph)	–10 to 10 r/min
			Release accelerator pedal (at less than 50 km/h (31 mph)	The value should fluctuate when the accelerator is released.
17	Torque converter clutch solenoid valve duty	• Warmed up • Transmission range: Sport mode • Driving at speed of 60 km/h (37 mph) in 3rd gear	Driving at constant speed of 60 km/h (37 mph)	70 – 99.6%
			Release accelerator pedal (at less than 50 km/h (31 mph))	70 – 99.6% → 0% Decreases gradually as the vehicle speed decreases
7	Transmission fluid temperature sensor	Warmed up	Drive for 15 minutes or more so that the transmission fluid temperature becomes 70 – 80°C (158 – 176°F)	Gradually rises to 70 – 80°C (158 – 176°F)
2	Throttle position sensor	• Ignition switch: ON • Engine: Stopped • Transmission range: P	Accelerator pedal: Release	300 – 700 mV
			Accelerator pedal: Depressed	Gradually rises from the above value
			Accelerator pedal: Fully depressed	4,000 mV or more

ITEM NO.	INSPECTION ITEM	INSPECTION REQUIREMENT		NORMAL CONDITION
34	Transmission range switch	Ignition switch: ON	Transmission range: P	P
			Transmission range: R	R
			Transmission range: N	N
			Transmission range: D	D
13	Underdrive solenoid valve duty	Transmission range: Sport mode	Driving at constant speed of 10 km/h (6.2 mph) in 1st gear	0%
			Driving at constant speed of 30 km/h (19 mph) in 2nd gear	0%
			Driving at constant speed of 50 km/h (31 mph) in 3rd gear	0%
			Driving at constant speed of 60 km/h (37 mph) in 4th gear	100% <4A/T> 0% <5A/T>
			Driving at constant speed of 70 km/h (43 mph) in 5th gear <5A/T>	100%

ACTUATOR TEST REFERENCE TABLE

M1231008200442

ITEM NO.	INSPECTION ITEM	TEST CONTENT	INSPECTION REQUIREMENT	NORMAL CONDITION
7	1st indicator light	Illuminate each indicator light for three seconds to the signal from the scan tool MB991958 (M.U.T.-III sub assembly).	• Ignition switch: ON • Transmission range: P • Engine: stopped • Throttle opening voltage: Less than one volt	Shift indicator light illuminates.
8	2nd indicator light			
9	3rd indicator light			
10	4th indicator light			
11	5th indicator light <5A/T>			
12	A/T control relay	Actuator test in scope mode, data list No.54. Control relay is OFF for three seconds.		Data list No.54 • During test: 0 V • Normal: Battery positive voltage
1	Low-reverse solenoid valve	Drive the solenoid valve specified by the scan tool MB991958 (M.U.T.-III sub assembly) at 50% duty for five seconds. No other solenoid valve should be energized.		The solenoid should click when activated
4	Overdrive solenoid valve			
5	Reduction solenoid valve <5A/T>			
3	Second solenoid valve			
6	Torque converter clutch solenoid valve			
2	Underdrive solenoid valve			

INVECS-II CANCEL COMMAND (SPECIAL FUNCTION)

M1231009500394

ITEM	CONTENT	REMARKS
INVECS-II control stop	Stops the INVECS-II control and shifts gears according to the standard shift pattern.	Use this function when performing procedure 8 in the road tests. (Refer to P.23A-22) The INVECS-II cancel command will last until the ignition switch is turned from "ON" to "LOCK"(OFF) or vice versa.

PCM TERMINAL VOLTAGE REFERENCE CHART FOR TRANSAXLE OPERATION

M1231008400468

1. Disconnect the PCM connectors, and connect special tool MB991923 in between.
2. Measure the voltages between each check connector terminals of special tool MB991923 and ground terminals 4 or 7.

SPECIAL TOOL-POWER PLANT ECU CHECK HARNESS (MB991923) CONNECTOR: COMPONENT SIDE

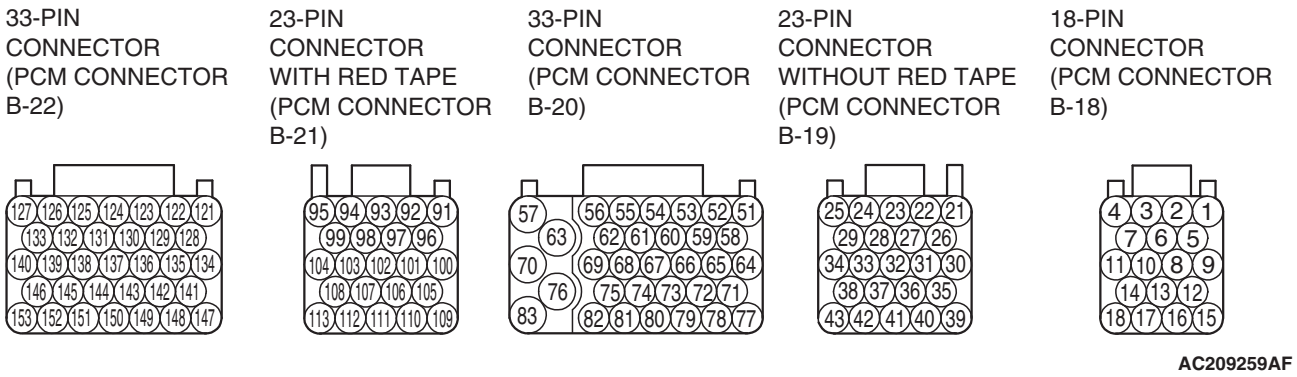

TERMINAL NO.	INSPECTION ITEM	INSPECTION REQUIREMENT	NORMAL CONDITION
4	Ground	Always	1 V or less
7	Ground	Always	1 V or less
9	Stoplight switch	• Ignition switch: ON • Brake pedal: Depressed	Battery positive voltage
		• Ignition switch: ON • Brake pedal: Released	1 V or less
14	Vehicle speed signal	• Measure between terminal 14 and 4 with an oscilloscope. • Engine: 2,000 r/min • Gear range: 3rd gear	Refer to P.23A-371, Inspection Procedure Using an Oscilloscope.
32	Shift switch (up)	• Ignition switch: ON • Selector lever operation: Upshift and hold the selector lever	Battery positive voltage
		• Ignition switch: ON • Selector lever operation: Other than above	1 V or less
36	Shift switch (down)	• Ignition switch: ON • Selector lever operation: Downshift and hold the selector lever	Battery positive voltage
		• Ignition switch: ON • Selector lever operation: Other than above	1 V or less
39	Select switch	• Ignition switch: ON • Transmission range: Sport mode	Battery positive voltage
		• Ignition switch: ON • Transmission range: Other than above	1 V or less

TERMINAL NO.	INSPECTION ITEM	INSPECTION REQUIREMENT	NORMAL CONDITION
53	Reduction solenoid valve <5A/T>	• Engine: idling • Gear range: 5th gear	Battery positive voltage
		• Engine: idling • Transmission range: P	6 – 9 V
54	Torque converter clutch solenoid valve	• Engine: idling • Gear range: 1st gear	Battery positive voltage
55	Overdrive solenoid valve	• Engine: idling • Gear range: 3rd gear	Battery positive voltage
		• Engine: idling • Transmission range: P	6 – 9 V
56	Low-reverse solenoid valve	• Engine: idling • Transmission range: P	Battery positive voltage
		• Engine: idling • Gear range: 2nd gear	6 – 9 V
57	Solenoid valve power supply	Ignition switch: LOCK (OFF)	1V or less
		Ignition switch: ON	Battery positive voltage
61	Transmission range switch: R	• Ignition switch: ON • Transmission range: R	Battery positive voltage
		• Ignition switch: ON • Transmission range: Other than above	1 V or less
65	Underdrive solenoid valve	• Engine: idling • Gear range: 1st gear	Battery positive voltage
		• Engine: idling • Transmission range: P	6 – 9 V
66	Second solenoid valve	• Engine: idling • Gear range: 2nd gear	Battery positive voltage
		• Engine: idling • Transmission range: P	6 – 9 V
67	Transmission range switch: P	• Ignition switch: ON • Transmission range: P	Battery positive voltage
		• Ignition switch: ON • Transmission range: Other than above	1 V or less
70	Solenoid valve power supply	Ignition switch: LOCK (OFF)	1 V or less
		Ignition switch: ON	Battery positive voltage
73	Transmission range switch: D	• Ignition switch: ON • Transmission range: D	Battery positive voltage
		• Ignition switch: ON • Transmission range: Other than above	1 V or less

TERMINAL NO.	INSPECTION ITEM	INSPECTION REQUIREMENT	NORMAL CONDITION
74	Transmission fluid temperature sensor	• Ignition switch: ON • Transmission fluid temperature: 20°C (68°F)	3.8 – 4.0 V
		• Ignition switch: ON • Transmission fluid temperature: 40°C (104°F)	3.2 – 3.4 V
		• Ignition switch: ON • Transmission fluid temperature: 80°C (176°F)	1.7 – 1.9 V
77	Transmission range switch: N	• Ignition switch: ON • Transmission range: N	Battery positive voltage
		• Ignition switch: ON • Transmission range: Other than above	1 V or less
82	A/T control relay	Always	1 V or less
111	Input shaft speed sensor	• Measure between terminal 111 and 4 with an oscilloscope. • Engine: 2,000 r/min • Gear range: 3rd gear <4A/T> or 4th gear <5A/T>	Refer to P.23A-371, Inspection Procedure Using an Oscilloscope.
112	Output shaft speed sensor	• Measure between terminal 112 and 4 with an oscilloscope. • Engine: 2,000 r/min • Gear range: 3rd gear <4A/T> or 4th gear <5A/T>	Refer to P.23A-371, Inspection Procedure Using an Oscilloscope.

PCM TERMINAL RESISTANCE AND CONTINUITY INSPECTION CHART

M1231013400260

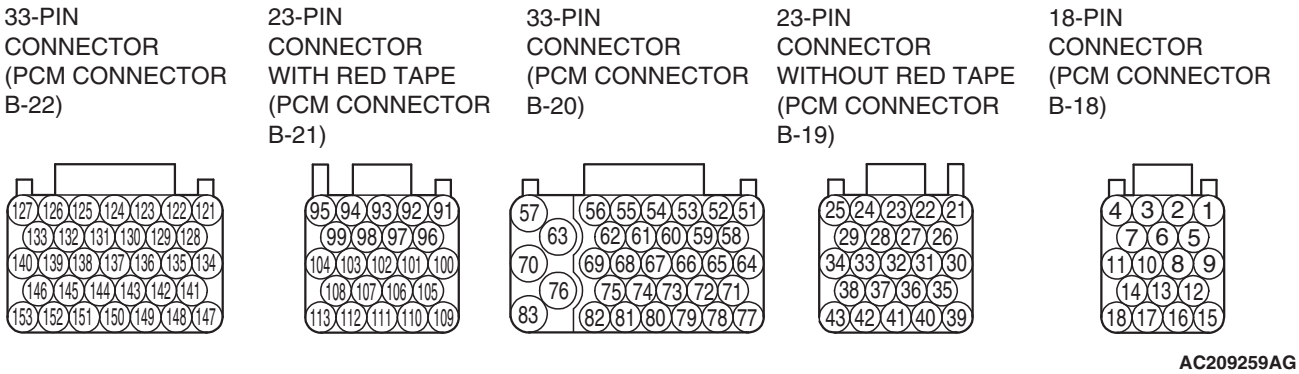

NOTE: The PCM connectors should be disconnected for this inspection.

TERMINAL NO.	INSPECTION ITEM	NORMAL CONDITION (CHECK CONDITION)
69 – 74	Transmission fluid temperature sensor	16.7 – 20.5 kΩ [at 0°C (32°F)]
		7.3 – 8.9 kΩ [at 20°C (68°F)]
		3.4 – 4.2 kΩ [at 40°C (104°F)]
		1.9 – 2.2 kΩ [at 60°C (140°F)]
		1.0 – 1.2 kΩ [at 80°C (176°F)]
		0.57 – 0.69 kΩ [at 100°C (212°F)]

INSPECTION PROCEDURE USING AN OSCILLOSCOPE

M1231008500487

TERMINAL NO.	INSPECTION ITEM	INSPECTION REQUIREMENT		NORMAL CONDITION (WAVEFORM SAMPLE)
103	Crankshaft position sensor	Transmission range: N	Idling (Vehicle stopped)	Waveform A
111	Input shaft speed sensor	Gear range: 3rd gear <4A/T> or 4th gear <5A/T>	Driving at constant speed of 50 km/h (31 mph) in 3rd gear (1,500 – 1,800 r/min) <4A/T> or 60 km/h (37 mph) in 4th gear (1,400 – 1,700 r/min) <5A/T>	Waveform B
112	Output shaft speed sensor			

TERMINAL NO.	INSPECTION ITEM	INSPECTION REQUIREMENT		NORMAL CONDITION (WAVEFORM SAMPLE)
53	Reduction solenoid valve <5A/T>	• Ignition switch: ON • Transmission range: P • Engine: Stopped • Throttle (Accelerator) opening voltage: 1 V or less	Force drive each solenoid valve (Actuator test)	Waveform C
54	Torque converter clutch control solenoid			
55	Overdrive solenoid valve			
56	Low-reverse solenoid valve			
65	Underdrive solenoid valve			
66	Second solenoid valve			

WAVEFORM SAMPLE

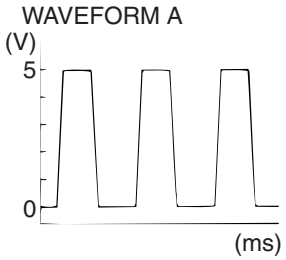

AC001872AE

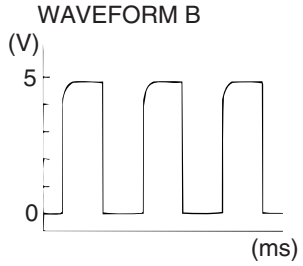

AC001873AD

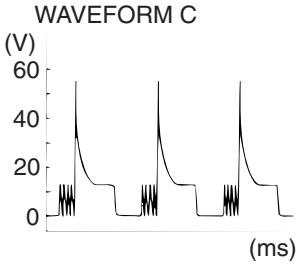

AC001875AF

DIAGNOSIS
<KEY INTERLOCK AND SHIFT LOCK MECHANISM>

INTRODUCTION TO A/T KEY INTERLOCK AND SHIFT LOCK MECHANISMS

M1232001600301

If the key interlock and shift lock mechanisms indicates a malfunction, the key interlock cable, the shift lock cable, or the selector lever assembly may be defective. In this case, follow troubleshooting below.

A/T KEY INTERLOCK AND SHIFT LOCK MECHANISMS DIAGNOSTIC TROUBLESHOOTING STRATEGY

M1232001700308

Use these steps to plan your diagnostic strategy. If your follow then carefully, you will be sure that you have exhausted most of the possible ways to find automatic transaxle key interlock and shift lock mechanisms fault.

1. Gather information from the customer.
2. Verify that the condition described by the customer exists.
3. Find the malfunction by following the Symptom Chart.
4. Verify malfunction is eliminated.

SYMPTOM CHART

M1232001800587

SYMPTOM	INSPECTION PROCEDURE	REFERENCE PAGE
Selector lever can be moved from "P" to "R" position without depressing brake pedal when ignition key is at any position other than "LOCK" (OFF) position.	1	P.23A-374
Selector lever cannot be moved from "P" to "R" position with brake pedal depressed when ignition key is at any position other than "LOCK" (OFF) position.	2	P.23A-375
Selector lever can be moved from "P" to "R" position with brake pedal depressed when ignition key is at "LOCK" (OFF) position.	3	P.23A-376
Selector lever cannot be moved from "P" to "R" position smoothly.	4	P.23A-377
Selector lever cannot be moved from "P" to "R" position.	5	P.23A-378
Ignition key cannot be turned to "LOCK" (OFF) position when selector lever is at "P" position.	6	P.23A-379
Ignition key can be turned to "LOCK" (OFF) position when selector lever is at any position other than "P" position.	7	P.23A-380

SYMPTOM PROCEDURES

INSPECTION PROCEDURE 1: Selector Lever can be Moved from "P" to "R" Position without Depressing Brake Pedal when Ignition Key is at any Position Other than "LOCK" (OFF) Position.

TECHNICAL DESCRIPTION (COMMENT)

Lock cam or shift lock cable may be defective.

TROUBLESHOOTING HINTS

- Malfunction of lock cam
- Malfunction of shift lock cable

DIAGNOSIS

STEP 1. Check the fit of the lock cam.

Q: Is the lock cam installed correctly?
YES : Go to Step 2.
NO : Install the lock cam correctly. When the brake pedal is released with the ignition key at other positions than "LOCK" (OFF) position, check that the selector lever can not be moved from "P" position to "R" position.

STEP 2. Check the lock cam.

Q: Is the lock cam in good condition?
YES : Go to Step 3.
NO : Replace the selector lever assembly. Refer to P.23A-404. When the brake pedal is released with the ignition key at other positions than "LOCK" (OFF) position, check that the selector lever can not be moved from "P" position to "R" position.

STEP 3. Check the fit of the shift lock cable.

Q: Is the shift lock cable installed correctly?
YES : Go to Step 4.
NO : Install the shift lock cable correctly. Refer to P.23A-407. When the brake pedal is released with the ignition key at other positions than "LOCK" (OFF) position, check that the selector lever can not be moved from "P" position to "R" position.

STEP 4. Check the shift lock cable.

Q: Is the shift lock cable in good condition?
YES : No action to be taken.
NO : Replace the shift lock cable. Refer to P.23A-407. When the brake pedal is released with the ignition key at other positions than "LOCK" (OFF) position, check that the selector lever can not be moved from "P" position to "R" position.

INSPECTION PROCEDURE 2: Selector Lever cannot be Moved from "P" to "R" Position with Brake Pedal Depressed when Ignition Key is at any Position Other than "LOCK" (OFF) Position.

TECHNICAL DESCRIPTION (COMMENT)

Selector lever assembly, shift lock cable, key interlock cable, transaxle control cable, or lock cam may be defective.

TROUBLESHOOTING HINTS

- Malfunction of selector lever assembly
- Malfunction of shift lock cable
- Malfunction of key interlock cable
- Malfunction of transaxle control cable
- Malfunction of lock cam

DIAGNOSIS

STEP 1. Check the connection of lock cam and key interlock cable.

Q: Is the connection of lock cam and key interlock cable in good condition?
YES : Go to Step 2.
NO : Repair the connection of lock cam. When the brake pedal is depressed with the ignition key at other positions than "LOCK" (OFF) position, check that the selector lever can be moved from "P" position to "R" position.

STEP 2. Check the connection of selector lever assembly and transaxle control cable.

Q: Is the connection of selector lever assembly and shift transaxle control cable in good condition?
YES : Go to Step 3.
NO : Repair the connection of selector lever assembly and transaxle control cable. When the brake pedal is depressed with the ignition key at other positions than "LOCK" (OFF) position, check that the selector lever can be moved from "P" position to "R" position.

STEP 3. Check the fit of the shift lock cable.

Q: Is the shift lock cable installed correctly?
YES : Go to Step 4.
NO : Install the shift lock cable correctly. Refer to P.23A-407. When the brake pedal is depressed with the ignition key at other positions than "LOCK" (OFF) position, check that the selector lever can be moved from "P" position to "R" position.

STEP 4. Check the shift lock cable.

Q: Is the shift lock cable in good condition?
YES : Go to Step 5.
NO : Replace the shift lock cable. Refer to P.23A-407. When the brake pedal is depressed with the ignition key at other positions than "LOCK" (OFF) position, check that the selector lever can be moved from "P" position to "R" position.

STEP 5. Check the fit of the key interlock cable.

Q: Is the key interlock cable installed correctly?
YES : Go to Step 6.
NO : Install the key interlock cable correctly. Refer to P.23A-407. When the brake pedal is depressed with the ignition key at other positions than "LOCK" (OFF) position, check that the selector lever can be moved from "P" position to "R" position.

STEP 6. Check the key interlock cable.

Q: Is the key interlock cable in good condition?
YES : Go to Step 7.
NO : Replace the key interlock cable. Refer to P.23A-407. When the brake pedal is depressed with the ignition key at other positions than "LOCK" (OFF) position, check that the selector lever can be moved from "P" position to "R" position.

STEP 7. Check the fit of the transaxle control cable.

Q: Is the transaxle control cable installed correctly?
YES : Go to Step 8.
NO : Install the transaxle control cable correctly. Refer to P.23A-404. When the brake pedal is depressed with the ignition key at other positions than "LOCK" (OFF) position, check that the selector lever can be moved from "P" position to "R" position.

STEP 8. Check the transaxle control cable.

Q: Is the transaxle control cable in good condition?
YES : Repair or replace the selector lever assembly. Refer to P.23A-404. When the brake pedal is depressed with the ignition key at other positions than "LOCK" (OFF) position, check that the selector lever can be moved from "P" position to "R" position.
NO : Replace the transaxle control cable. Refer to P.23A-404. When the brake pedal is depressed with the ignition key at other positions than "LOCK" (OFF) position, check that the selector lever can be moved from "P" position to "R" position.

INSPECTION PROCEDURE 3: Selector Lever can be Moved from "P" to "R" Position with Brake Pedal Depressed when Ignition Key is at "LOCK" (OFF) Position.

TECHNICAL DESCRIPTION (COMMENT)

Key interlock cable or lock cam may be defective.

TROUBLESHOOTING HINTS

- Malfunction of lock cam
- Malfunction of key interlock cable

DIAGNOSIS

STEP 1. Check the connection of lock cam and key interlock cable.

Q: Is the connection of lock cam and key interlock cable in good condition?
YES : Go to Step 2.
NO : Repair the connection of lock cam. When the brake pedal is depressed with the ignition key at the "LOCK" (OFF) position, check that the selector lever can not be moved from "P" position to "R" position.

STEP 2. Check the fit of the lock cam.

Q: Is the lock cam installed correctly?
YES : Go to Step 3.
NO : Install the lock cam correctly. When the brake pedal is depressed with the ignition key at the "LOCK" (OFF) position, check that the selector lever can not be moved from "P" position to "R" position.

STEP 3. Check the lock cam.

Q: Is the lock cam in good condition?
YES : Go to Step 4.
NO : Replace the selector lever assembly. Refer to P.23A-404. When the brake pedal is depressed with the ignition key at the "LOCK" (OFF) position, check that the selector lever can not be moved from "P" position to "R" position.

STEP 4. Check the fit of the key interlock cable.

Q: Is the key interlock cable installed correctly?
YES : Go to Step 5.
NO : Install the key interlock cable correctly. Refer to P.23A-407. When the brake pedal is depressed with the ignition key at the "LOCK" (OFF) position, check that the selector lever can not be moved from "P" position to "R" position.

STEP 5. Check the key interlock cable.

Q: Is the key interlock cable in good condition?
YES : No action to be taken.
NO : Replace the key interlock cable. Refer to P.23A-407. When the brake pedal is depressed with the ignition key at the "LOCK" (OFF) position, check that the selector lever can not be moved from "P" position to "R" position.

INSPECTION PROCEDURE 4: Selector Lever cannot be Moved from "P" to "R" Position Smoothly.

TECHNICAL DESCRIPTION (COMMENT)

Key interlock cable, shift lock cable, transaxle control cable, lock cam, or selector lever assembly may be defective.

TROUBLESHOOTING HINTS

- Malfunction of key interlock cable
- Malfunction of shift lock cable
- Malfunction of transaxle control cable
- Malfunction of lock cam
- Malfunction of selector lever assembly

DIAGNOSIS

STEP 1. Check the connection of lock cam and key interlock cable.

Q: Is the connection of lock cam and key interlock cable in good condition?
YES : Go to Step 2.
NO : Repair the connection of lock cam and shift lock cable. Check that the selector lever can be moved from "P" position to "R" position smoothly.

STEP 2. Check the connection of selector lever assembly and transaxle control cable.

Q: Is the connection of selector lever assembly and transaxle control cable in good condition?
YES : Go to Step 3.
NO : Repair the connection of selector lever assembly and transaxle control cable. Check that the selector lever can be moved from "P" position to "R" position smoothly.

STEP 3. Check the fit of the lock cam.

Q: Is the lock cam installed correctly?
YES : Go to Step 4.
NO : Install the lock cam correctly. Check that the selector lever can be moved from "P" position to "R" position smoothly.

STEP 4. Check the lock cam.

Q: Is the lock cam in good condition?
YES : Go to Step 5.
NO : Replace the selector lever assembly. Refer to P.23A-404. Check that the selector lever can be moved from "P" position to "R" position smoothly.

STEP 5. Check the fit of the shift lock cable.

Q: Is the shift lock cable installed correctly?
YES : Go to Step 6.
NO : Install the shift lock cable correctly. Refer to P.23A-407. Check that the selector lever can be moved from "P" position to "R" position smoothly.

STEP 6. Check the shift lock cable.

Q: Is the shift lock cable in good condition?
YES : Go to Step 7.
NO : Replace the shift lock cable. Refer to P.23A-407. Check that the selector lever can be moved from "P" position to "R" position smoothly.

STEP 7. Check the fit of the key interlock cable.

Q: Is the key interlock cable installed correctly?
YES : Go to Step 8.
NO : Install the key interlock cable correctly. Refer to P.23A-407. Check that the selector lever can be moved from "P" position to "R" position smoothly.

STEP 8. Check the key interlock cable.

Q: Is the key interlock cable in good condition?
YES : Go to Step 9.
NO : Replace the key interlock cable. Refer to P.23A-407. Check that the selector lever can be moved from "P" position to "R" position smoothly.

STEP 9. Check the fit of the transaxle control cable.

Q: Is the transaxle control cable installed correctly?
YES : Go to Step 10.
NO : Install the transaxle control cable correctly. Refer to P.23A-404. Check that the selector lever can be moved from "P" position to "R" position smoothly.

STEP 10. Check the transaxle control cable.

Q: Is the transaxle control cable in good condition?
YES : Repair or replace the selector lever assembly. Refer to P.23A-404. Check that the selector lever can be moved from "P" position to "R" position smoothly.
NO : Replace the transaxle control cable. Refer to P.23A-404. Check that the selector lever can be moved from "P" position to "R" position smoothly.

INSPECTION PROCEDURE 5: Selector Lever cannot be Moved from "R" to "P" Position.

TECHNICAL DESCRIPTION (COMMENT)

Selector lever assembly, transaxle control cable, or lock cam may be defective.

TROUBLESHOOTING HINTS

- Malfunction of selector lever assembly
- Malfunction of transaxle control cable
- Malfunction of lock cam

DIAGNOSIS

STEP 1. Check the connection of selector lever assembly and transaxle control cable.

Q: Is the connection of selector lever assembly and transaxle control cable in good condition?
YES : Go to Step 2.
NO : Repair the connection of selector lever assembly and transaxle control cable. Check that the selector lever can be moved from "R" position to "P" position.

STEP 2. Check the fit of the lock cam.

Q: Is the lock cam installed correctly?
YES : Go to Step 3.
NO : Install the lock cam correctly. Check that the selector lever can be moved from "R" position to "P" position.

STEP 3. Check the lock cam.

Q: Is the lock cam in good condition?
YES : Go to Step 4.
NO : Replace the selector lever assembly. Refer to P.23A-404. Check that the selector lever can be moved from "R" position to "P" position.

STEP 4. Check the fit of the transaxle control cable.

Q: Is the transaxle control cable installed correctly?
YES : Go to Step 5.
NO : Install the transaxle control cable correctly. Refer to P.23A-404. Check that the selector lever can be moved from "R" position to "P" position.

STEP 5. Check the transaxle control cable.

Q: Is the transaxle control cable in good condition?
YES : Repair or replace the selector lever assembly. Refer to P.23A-404. Check that the selector lever can be moved from "R" position to "P" position smoothly.
NO : Replace the transaxle control cable. Refer to P.23A-404. Check that the selector lever can be moved from "R" position to "P" position.

INSPECTION PROCEDURE 6: Ignition Key cannot be Turned to the "LOCK" (OFF) Position when Selector Lever is at "P" Position.

TECHNICAL DESCRIPTION (COMMENT)

Lock cam, steering lock cylinder assembly, transaxle control cable, or key interlock cable may be defective.

TROUBLESHOOTING HINTS

- Malfunction of lock cam
- Malfunction of key interlock cable
- Malfunction of transaxle control cable
- Malfunction of steering lock cylinder assembly

DIAGNOSIS

STEP 1. Check the connection of lock cam and key interlock cable.

Q: Is the connection of lock cam and key interlock cable in good condition?
YES : Go to Step 2.
NO : Repair the connection of lock cam. Check that the ignition key can be turned to the "LOCK" (OFF) position with the selector lever at "P" position.

STEP 2. Check the fit of the lock cam.

Q: Is the lock cam installed correctly?
YES : Go to Step 3.
NO : Install the lock cam correctly. Check that the ignition key can be turned to the "LOCK" (OFF) position with the selector lever at "P" position.

STEP 3. Check the lock cam.

Q: Is the lock cam in good condition?
YES : Go to Step 4.
NO : Replace the selector lever assembly. Refer to P.23A-404. Check that the ignition key can be turned to the "LOCK" (OFF) position with the selector lever at "P" position.

STEP 4. Check the fit of the key interlock cable.

Q: Is the key interlock cable installed correctly?
YES : Go to Step 5.
NO : Install the key interlock cable correctly. Refer to P.23A-407. Check that the ignition key can be turned to the "LOCK" (OFF) position with the selector lever at "P" position.

STEP 5. Check the key interlock cable.

Q: Is the key interlock cable in good condition?
YES : Go to Step 6.
NO : Replace the key interlock cable. Refer to P.23A-407. Check that the ignition key can be turned to the "LOCK" (OFF) position with the selector lever at "P" position.

STEP 6. Check the fit of the transaxle control cable.

Q: Is the transaxle control cable installed correctly?
YES : Replace the steering lock cylinder assembly. Refer to P.37-29 and P.37-32. Check that the ignition key can not be turned to the "LOCK" (OFF) position with the selector lever at "P" position.
NO : Install the transaxle control cable correctly. Refer to P.23A-404. Check that the ignition key can be turned to the "LOCK" (OFF) position with the selector lever at "P" position.

INSPECTION PROCEDURE 7: Ignition Key can be Turned to the "LOCK" (OFF) Position when Selector Lever is at any Position Other than "P" Position.

TECHNICAL DESCRIPTION (COMMENT)

Lock cam, steering lock cylinder assembly, transaxle control cable, or key interlock cable may be defective.

TROUBLESHOOTING HINTS

- Malfunction of lock cam
- Malfunction of steering lock cylinder assembly
- Malfunction of transaxle control cable
- Malfunction of key interlock cable

DIAGNOSIS

STEP 1. Check the connection of lock cam and key interlock cable.

Q: Is the connection of lock cam and key interlock cable in good condition?
YES : Go to Step 2.
NO : Repair the connection of lock cam. Check that the ignition key can not be turned to the "LOCK" (OFF) position with the selector lever at any position other than "P" position.

STEP 2. Check the fit of the lock cam.

Q: Is the lock cam installed correctly?
YES : Go to Step 3.
NO : Install the lock cam correctly. Check that the ignition key can not be turned to the "LOCK" (OFF) position with the selector lever at any position other than "P" position.

STEP 3. Check the lock cam.

Q: Is the lock cam in good condition?
YES : Go to Step 4.
NO : Replace the selector lever assembly. Refer to P.23A-404. Check that the ignition key can not be turned to the "LOCK" (OFF) position with the selector lever at any position other than "P" position.

STEP 4. Check the fit of the key interlock cable.

Q: Is the key interlock cable installed correctly?
YES : Go to Step 5.
NO : Install the key interlock cable correctly. Refer to P.23A-407. Check that the ignition key can not be turned to the "LOCK" (OFF) position with the selector lever at any position other than "P" position.

STEP 5. Check the key interlock cable.

Q: Is the key interlock cable in good condition?
YES : Go to Step 6.
NO : Replace the key interlock cable. Refer to P.23A-407. Check that the ignition key can not be turned to the "LOCK" (OFF) position with the selector lever at any position other than "P" position.

STEP 6. Check the fit of the transaxle control cable.

Q: Is the transaxle control cable installed correctly?
YES : Replace the steering lock cylinder assembly. Refer to P.37-29 and P.37-32. Check that the ignition key can not be turned to the "LOCK" (OFF) position with the selector lever at any position other than "P" position.
NO : Install the transaxle control cable correctly. Refer to P.23A-404. Check that the ignition key can not be turned to the "LOCK" (OFF) position with the selector lever at any position other than "P" position.

SPECIAL TOOLS

M1231000601085

TOOL	TOOL NUMBER AND NAME	SUPERSESSION	APPLICATION
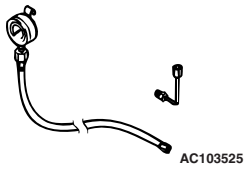	MD998330 (Includes MD998331) Oil pressure gauge (3.0 MPa, 427 psi)	MD998330-01	Measurement of hydraulic pressure
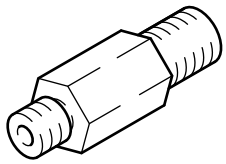	MD998332 Adapter	MD998332-01	Connection for oil pressure gauge
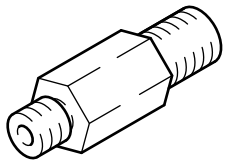	MD998268 Adapter	–	Connection for oil pressure gauge <5A/T>

TOOL	TOOL NUMBER AND NAME	SUPERSESSION	APPLICATION
A 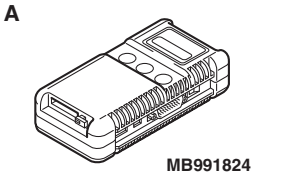 MB991824 B 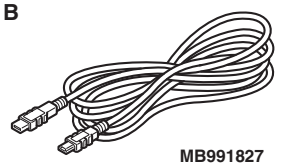 MB991827 C 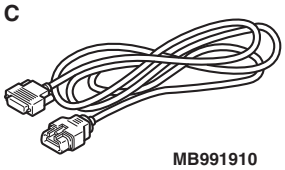 MB991910 D 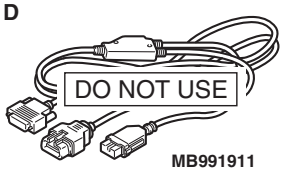 MB991911 E 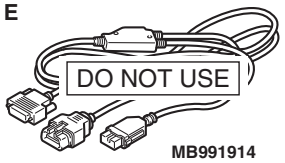 MB991914 F 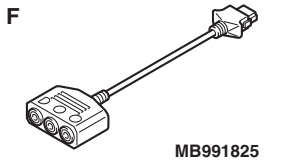 MB991825 G 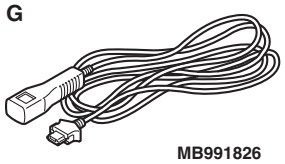 MB991826 MB991958	MB991958 A: MB991824 B: MB991827 C: MB991910 D: MB991911 E: MB991914 F: MB991825 G: MB991826 M.U.T.-III sub assembly A: Vehicle communication interface (V.C.I.) B: M.U.T.-III USB cable C: M.U.T.-III main harness A (Vehicles with CAN communication system) D: M.U.T.-III main harness B (Vehicles without CAN communication system) E: M.U.T.-III main harness C (for Chrysler models only) F: M.U.T.-III measurement adapter G: M.U.T.-III trigger harness	MB991824-KIT *NOTE: G: MB991826 M.U.T.-III trigger harness is not necessary when pushing V.C.I. ENTER key.*	Checking diagnostic trouble codes **⚠ CAUTION** **For vehicles with CAN communication, use M.U.T.-III main harness A to send simulated vehicle speed. If you connect M.U.T.-III main harness B instead, the CAN communication does not function correctly.**
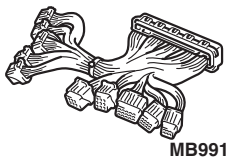 MB991923	MB991923 Test harness (3 pin, triangle)	MD998478-01	Measurement of PCM terminal voltage
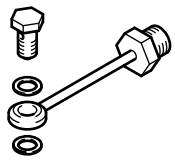	MD998900 Adapter	MIT220433	Connection for oil pressure gauge

TOOL	TOOL NUMBER AND NAME	SUPERSESSION	APPLICATION
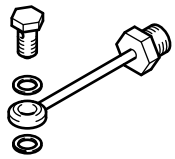	MB992018 Adapter	–	Connection for oil pressure gauge <5A/T>
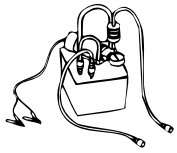	MB995062 Flushing tool	MLR-6906B or Equivalent	Flushing cooler and tube
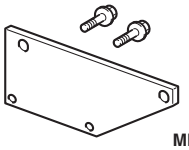 MB992012	MB992012 Engine hanger plate A	General Service Tool	Supporting the engine assembly during removal and installation of the transaxle assembly <5A/T>
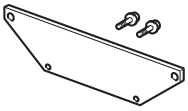 MB992013	MB992013 Engine hanger plate B	General Service Tool	

TOOL	TOOL NUMBER AND NAME	SUPERSESSION	APPLICATION
B991454	MB991454 Engine hanger balancer	MZ203827-01	When the engine hanger is used: Supporting the engine assembly during removal and installation of the transaxle assembly *NOTE: Special tool MB991454 is a part of engine hanger attachment set MB991453.*
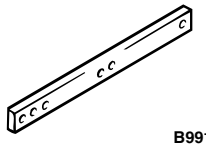 B991527	MB991527 Hanger	Tool not available	
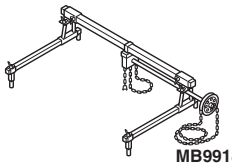 MB991895	MB991895 Engine hanger	Tool not available	
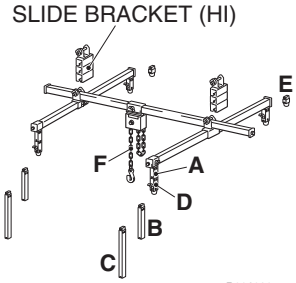 B991928	MB991928 Engine hanger A: MB991929 Joint (50) ×2 B: MB991930 Joint (90) ×2 C: MB991931 Joint (140) ×2 D: MB991932 Foot (standard) ×4 E: MB991933 Foot (short) ×2 F: MB991934 Chain and hook assembly	Tool not available	
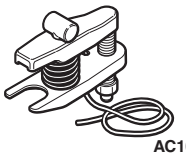 AC106827	MB991897 Ball joint remover	MB991113-01, MB990635-01 or general service tool	Knuckle and tie rod end ball joint disconnection *NOTE: Steering linkage puller(MB990635 or MB991113)is also used to disconnect knuckle and tie rod end ball joint.*
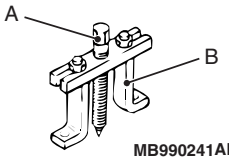 MB990241AB	MB990241 Axle shaft puller A: MB990242 Puller shaft B: MB990244 Puller bar	MB990241-01 or General service tool	Removal of the drive shaft
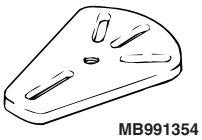 MB991354	MB991354 Puller body	General service tool	

TOOL	TOOL NUMBER AND NAME	SUPERSESSION	APPLICATION
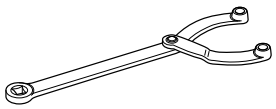 B990767	MB990767 End yoke holder	MB990767-01	Fixing of the hub
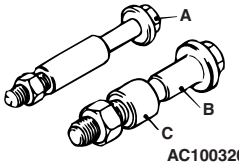 AC100320 AE	A: MB991017 B: MB990998 C: MB991000 A, B: Front hub remover and installer C: Spacer	MB990998-01	• Removal of the hub • Provisional holding of the wheel bearing • Measurement of hub starting torque • Measurement of wheel bearing end play *NOTE: MB991000, which belongs to MB990998, should be used as a spacer.*

ON-VEHICLE SERVICE

A/T CONTROL COMPONENT LAYOUT

M1231008600495

NAME	SYMBOL	NAME	SYMBOL
A/T control relay	B	Powertrain control module (PCM)	E
A/T control solenoid valves	D	Stoplight switch	F
Data link connector	G	Shift switch assembly	H
Input shaft speed sensor	A	Transmission fluid temperature sensor	D
Output shaft speed sensor	A	Transmission range switch	C

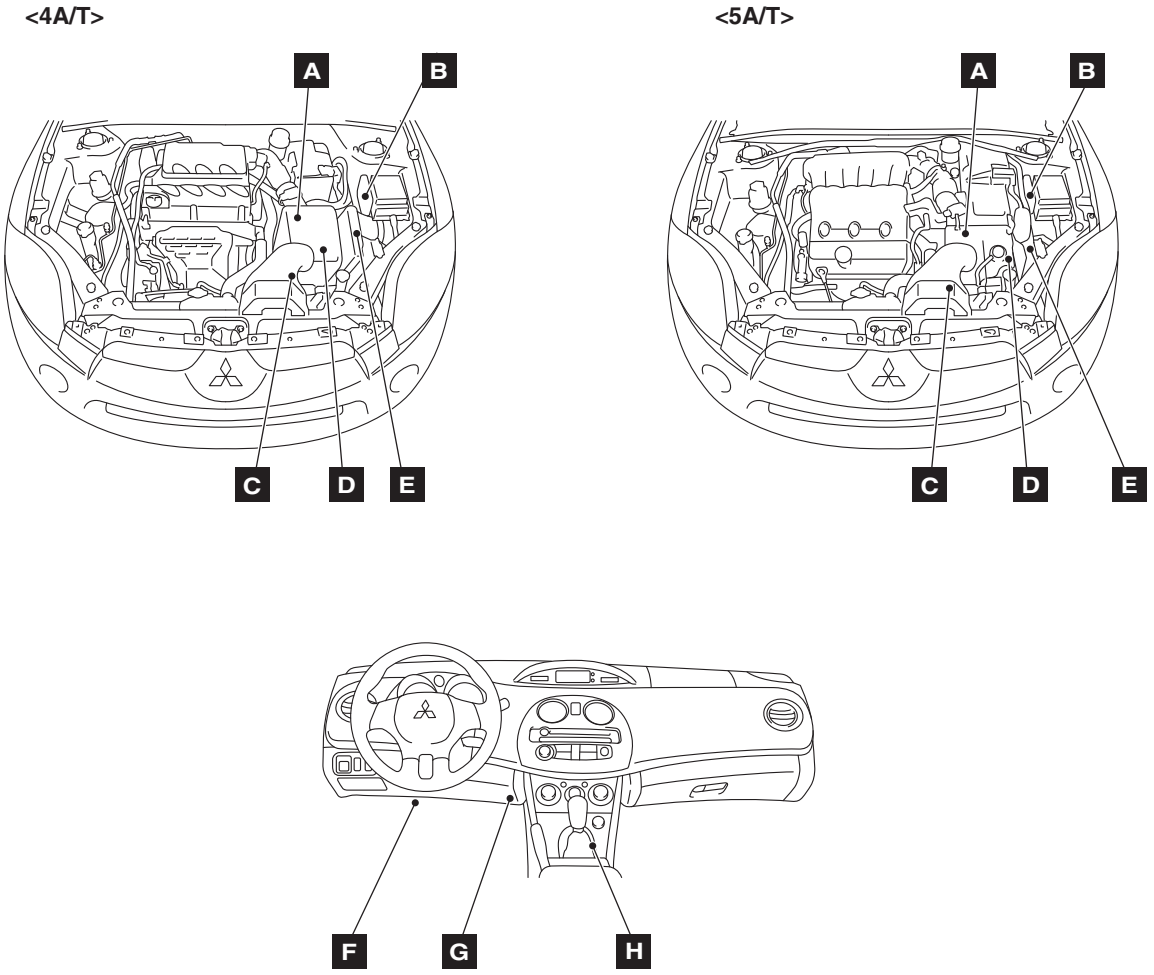

AC407197

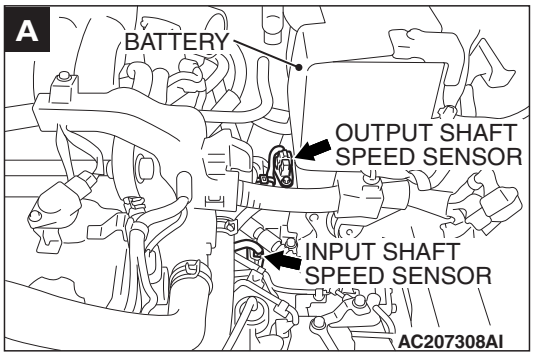
A
BATTERY
OUTPUT SHAFT SPEED SENSOR
INPUT SHAFT SPEED SENSOR
AC207308AI

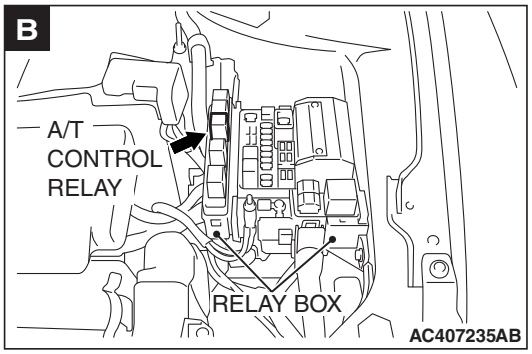
B
A/T CONTROL RELAY
RELAY BOX
AC407235AB

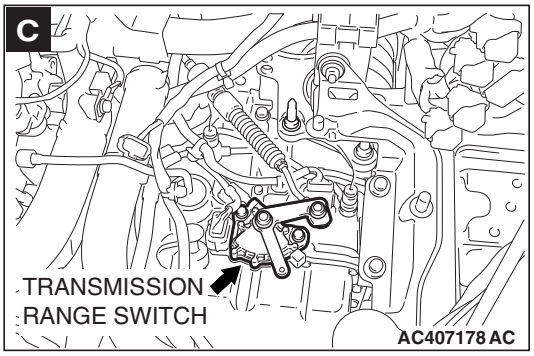
C
TRANSMISSION RANGE SWITCH
AC407178 AC

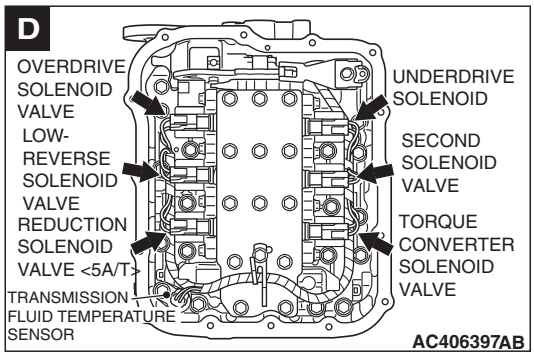
D
OVERDRIVE SOLENOID VALVE
LOW-REVERSE SOLENOID VALVE
REDUCTION SOLENOID VALVE <5A/T>
TRANSMISSION FLUID TEMPERATURE SENSOR
UNDERDRIVE SOLENOID
SECOND SOLENOID VALVE
TORQUE CONVERTER SOLENOID VALVE
AC406397AB

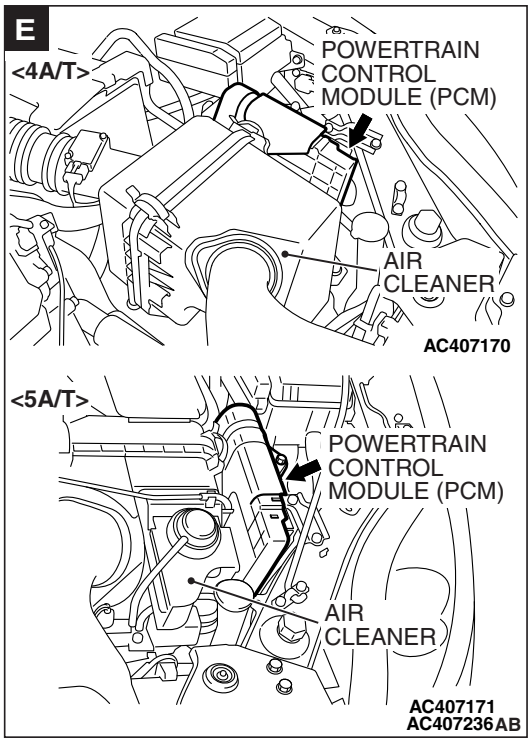
E
<4A/T>
POWERTRAIN CONTROL MODULE (PCM)
AIR CLEANER
AC407170
<5A/T>
POWERTRAIN CONTROL MODULE (PCM)
AIR CLEANER
AC407171
AC407236AB

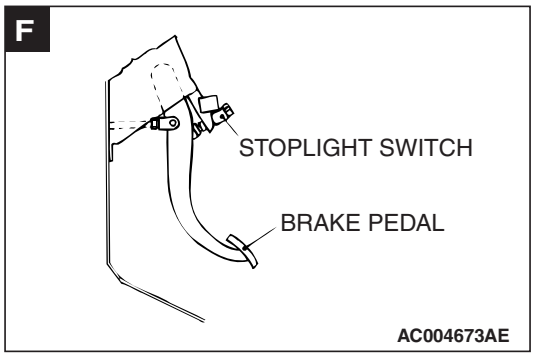
F
STOPLIGHT SWITCH
BRAKE PEDAL
AC004673AE

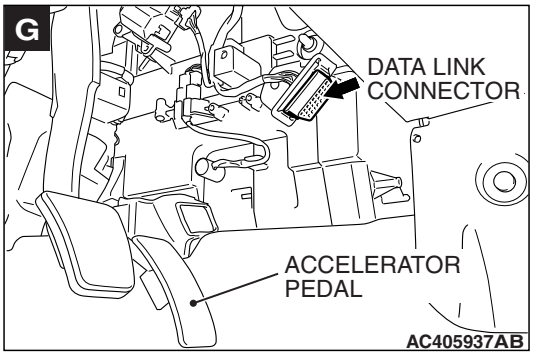
G
DATA LINK
CONNECTOR
ACCELERATOR
PEDAL
AC405937AB

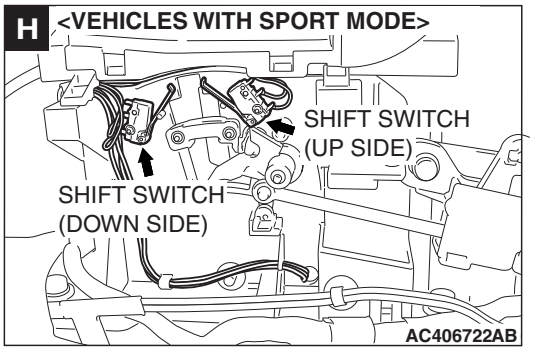
H
<VEHICLES WITH SPORT MODE>
SHIFT SWITCH
(UP SIDE)
SHIFT SWITCH
(DOWN SIDE)
AC406722AB

ESSENTIAL SERVICE

TRANSMISSION FLUID CHECK

M1231021400135

1. Drive the vehicle until the transmission fluid temperature rises to the normal operating temperature [70 – 80°C (158 – 176°F)].

   NOTE: The transmission fluid temperature is measured with scan tool MB991958 (M.U.T.-III sub assembly).

   NOTE: If it takes some amount of time until the transmission fluid reaches its normal operating temperature [70 – 80°C (158 – 176°F)], check the transmission fluid level by referring to the left diagram.

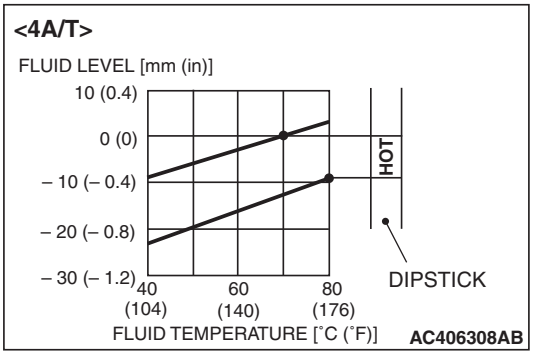

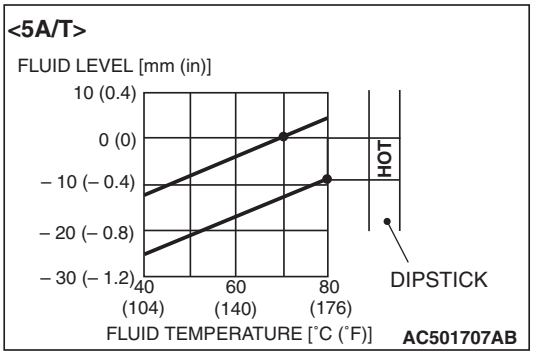

2. Park the vehicle on a level surface.
3. Move the selector lever through all positions to fill the torque converter and the hydraulic circuits with fluid, and then move the selector lever to the "N" position.
4. After wiping off any dirt around the dipstick, remove the dipstick and check the condition of the transmission fluid.

   NOTE: If the transmission fluid smells as if it is burnt, it means that the transmission fluid has been contaminated by fine particles from the bushings and friction materials. Transaxle overhaul and cooler line flushing may be necessary.

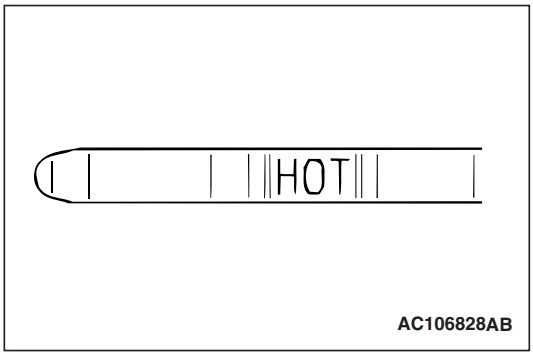

5. Check transmission fluid level is at the "HOT" mark on the dipstick. If the transmission fluid level is less than this, add DIAMOND ATF SP III until the level reaches the "HOT" mark.

   NOTE: If the transmission fluid level is too low, the oil pump will draw in air along with the transmission fluid, which will cause to form bubbles. If the transmission fluid level is too high, rotating components inside the transaxle will churn the fluid and air into a foamy liquid. Both conditions (level too low or too high) will cause the hydraulic pressure to drop, which will result in late shifting and slipping of the clutches and brakes.

   NOTE: In either case, air bubbles can interfere with normal valve, clutch, and brake operation. Also, foaming can cause transmission fluid to escape from the transaxle vent where it may be mistaken for a leak.

6. Securely insert the dipstick.

   NOTE: The transmission fluid should always be replaced under the following conditions:

   - *When troubleshooting the transaxle.*
   - *When overhauling the transaxle.*
   - *When the transmission fluid is noticeably dirty or burnt (driving under severe conditions).*

TRANSMISSION FLUID CHANGE

M1231021500132

If you have an transmission fluid changer, use this changer to replace the transmission fluid. If you do not have an transmission fluid changer, replace the transmission fluid by the following procedure.

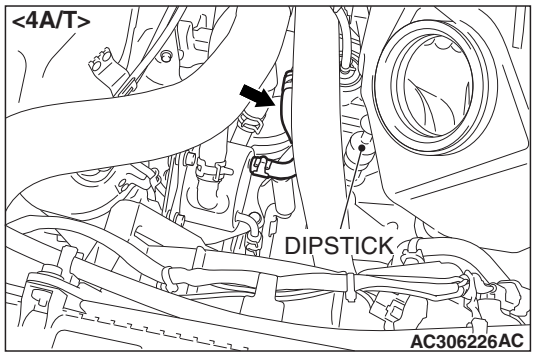

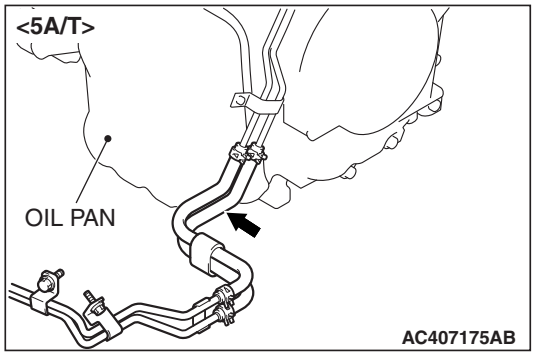

1. Disconnect the hose shown in the illustration which connects the transaxle and the oil cooler (inside the radiator). Place a container under the hose to collect the discharge.

⚠ CAUTION

The engine should be stopped within one minute after it is started. If all the transmission fluid has drained out before then, the engine should be stopped at that point.

2. Start the engine and let the transmission fluid drain out. (Running conditions: "N" range with engine idling)

   Approximately 3.5 dm^3 (3.7 quarts) of transmission fluid should be removed.

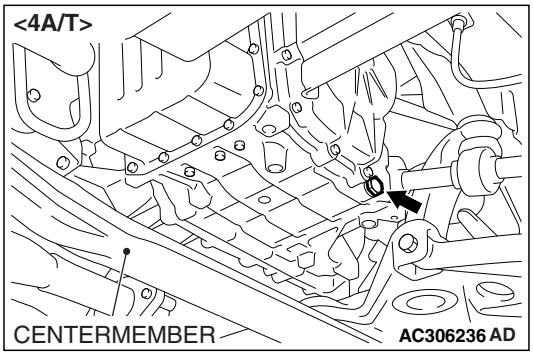

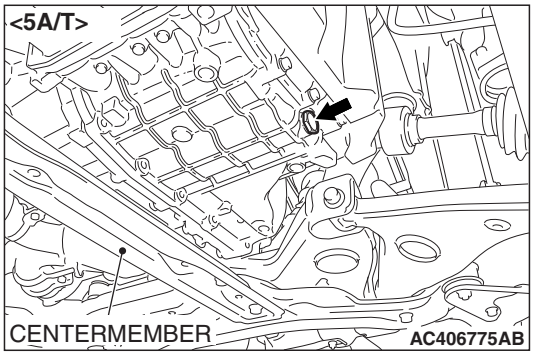

3. Remove the drain plug from the bottom of the transaxle case to drain the transmission fluid.

   Approximately 2.0 dm^3 (2.1 quarts) of transmission fluid should be removed.

4. Install the drain plug with a new gasket, and tighten it to the specified torque.

   Tightening torque: 32 ± 2 N·m (23 ± 2 ft-lb)

⚠ CAUTION

Stop pouring if the full volume of transmission fluid can not be added.

5. Add new transmission fluid (DIAMOND ATF SP III) through the oil filter tube.

   Approximately 5.5 dm^3 (5.8 quarts) of transmission fluid should be added.

6. Repeat the procedure in Step 2. (to pump out the rest of the contaminated transmission fluid)
7. Add new transmission fluid (DIAMOND ATF SP III) through the oil filter tube.

   Approximately 3.5 dm^3 (3.7 quarts) of transmission fluid should be added.

   NOTE: Check for contamination or a burnt odor. If the transmission fluid is still contaminated or burnt, repeat Steps 6 and 7 before proceeding to Step 8.

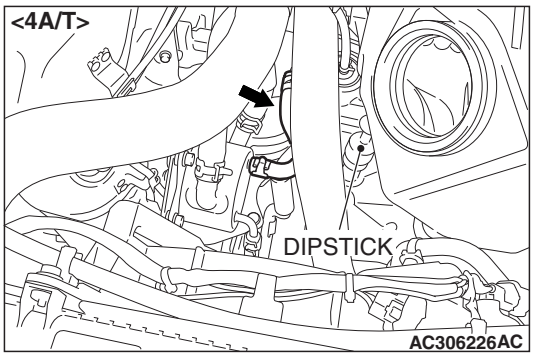

8. Reconnect the hose which was disconnected in step 1 above, and firmly insert the dipstick.
9. Start the engine and run it at idle for one to two minutes.
10. Move the selector lever through all positions, and then move it to the "N" position.

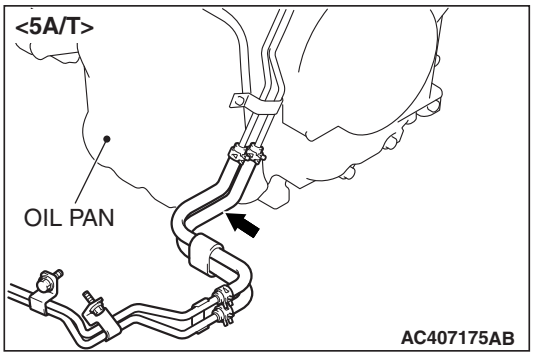

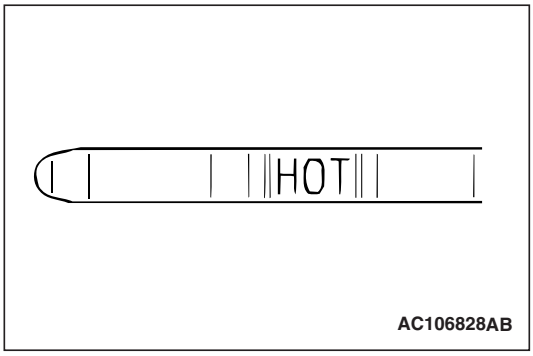

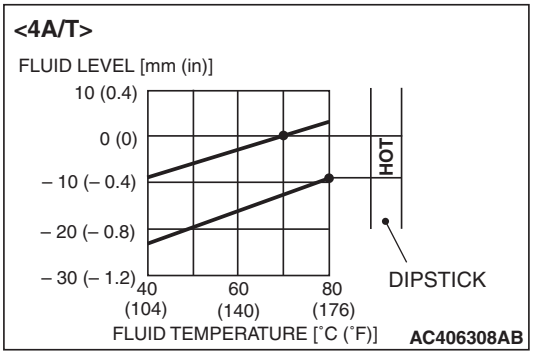

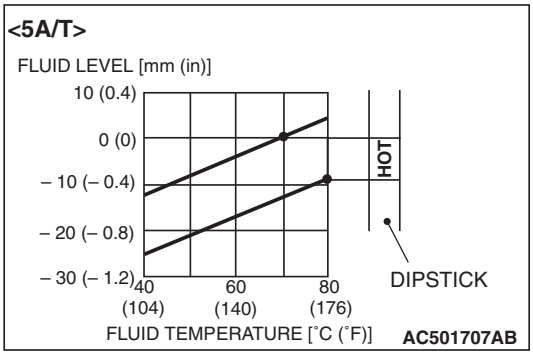

11. Check that the transmission fluid level is at the "COLD" mark on the dipstick. If the level is less than this, add transmission fluid.
12. Drive the vehicle until the transmission fluid temperature rises to the normal operating temperature [70 – 80°C (158 – 176°F)], and then check the transmission fluid level again. The transmission fluid level must be at the "HOT" mark.

    NOTE: The transmission fluid temperature is measured with scan tool MB991958 (M.U.T.-III sub assembly).

    NOTE: The "COLD" level is for reference only; the "HOT" level should be regarded as the standard level.

    NOTE: If it takes some amount of time until the transmission fluid reaches its normal operating temperature [70 – 80°C (158 – 176°F)], check the transmission fluid level by referring to the left diagram.
13. When the transmission fluid is less than the specified level, add transmission fluid.
    When the transmission fluid is greater than the specified level, drain the excess fluid through the drain plug to adjust the transmission fluid to the specified level.
14. Firmly insert the dipstick into the oil filler tube.

FLUSHING COOLERS AND TUBES

M1231013000488

Required Special Tool:
MB995062: Flushing Tool

⚠ ***WARNING***

- ***Wear protective eyewear that meets the requirements of ANSI Z87.1 – 1968 and OSHA. Wear standard industrial rubber gloves.***
- ***Keep lighted cigarettes, sparks, flames, and other ignition sources away from the area to prevent the ignition of combustible liquids and gases. Keep a class B fire extinguisher in the area where the flushing tool will be used. Keep the area well ventilated. Do not let flushing solvent come in contact with eyes or skin. If it does, flush with water for 15 to 20 seconds. Remove contaminated clothing and wash affected skin with soap and water. Seek medical attention.***

When a transaxle failure has contaminated the transmission fluid, the oil cooler(s) must be flushed. The cooler by-pass valve in the transaxle must also be replaced. The torque converter must also be replaced with an exchange unit. This will ensure that metal particles or sludged transmission fluid are not later transferred back into the reconditioned (or replaced) transaxle. There are two different procedures for flushing coolers and lines. The recommended procedure is to use special tool MB995062 Flushing Tool. The other procedure is to use a hand suction gun and mineral spirits.

1. Remove the cover plate filler plug on special tool MB995062. Fill the reservoir 1/2 to 3/4 full with fresh flushing solution. Flushing solvents are petroleum based solutions generally used to clean transaxle components. Do not use solvents containing acids, water, gasoline, or any other corrosive liquids.
2. Reinstall the filler plug on special tool MB995062.
3. Verify that the pump power switch is turned "OFF." Connect the red alligator clip to the positive battery terminal. Connect the black alligator clip to a good ground.
4. Disconnect the cooler lines at the transaxle.

   NOTE: When flushing the transaxle cooler and lines, always reverse flush.

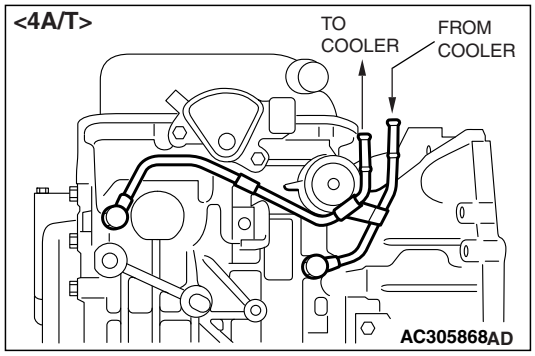

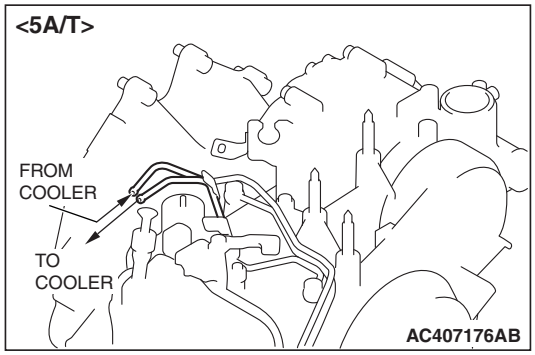

5. Connect the pressure line to the OUTLET line (from cooler).
6. Connect the return line to the INLET line (to cooler).
7. Turn the pump "ON" for two to three minutes to flush the cooler(s) and lines. Monitor the pressure readings. Clear the return lines. Pressure readings should stabilize below 138 kPa (20 psi) for vehicles equipped with a single cooler and 208 kPa (30 psi) for vehicles equipped with dual coolers. If flow is intermittent or exceeds these pressures, replace the cooler(s).
8. Turn the pump "OFF."
9. Disconnect the suction line from the reservoir at the cover plate. Disconnect the return line at the cover plate and place it in a drain pan.
10. Turn the pump "ON" for 30 seconds to purge flushing solution from the cooler(s) and lines. Turn the pump "OFF."
11. Place the suction line into a one quart container of DIAMOND ATF SP III transmission fluid.
12. Turn the pump "ON" until all transmission fluid is removed from the one quart container and lines. This purges any residual cleaning solvent from the transaxle cooler(s) and lines. Turn the pump "OFF."
13. Disconnect the alligator clips from the battery. Reconnect the flusher lines to the cover plate, and remove the flushing adapters from the cooler lines. Reconnect the cooler lines.

OIL COOLER FLOW CHECK

M1231013100269

After the new or repaired transaxle has been installed, fill to the proper level with DIAMOND ATF SP III. The flow should be checked using the following procedure:

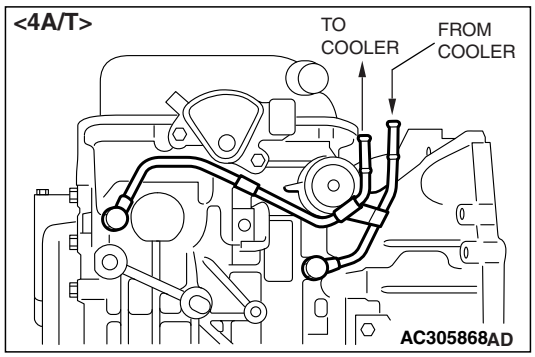

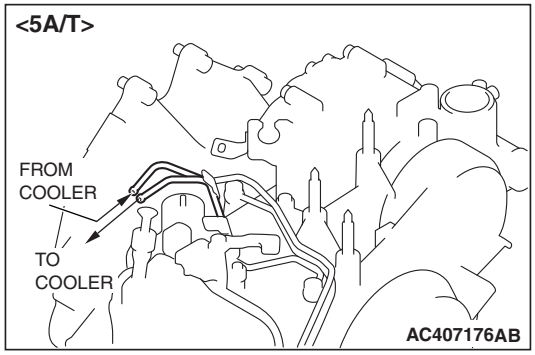

⚠ CAUTION

With the fluid set at the proper level, transmission fluid collection should not exceed one quart or internal damage to the transaxle may occur.

1. Disconnect the OUTLET line (from cooler) at the transaxle and place a collecting container under the disconnected line.
2. Run the engine at curb idle speed with the shift selector in neutral.
3. If transmission fluid flow is intermittent or it takes more than 20 seconds to collect one quart of transmission fluid, replace the cooler.
4. If flow is within acceptable limits, reconnect the cooler line. Then fill the transaxle to the proper level, using DIAMOND ATF SP III.

TRANSMISSION RANGE SWITCH CHECK

M1231021600247

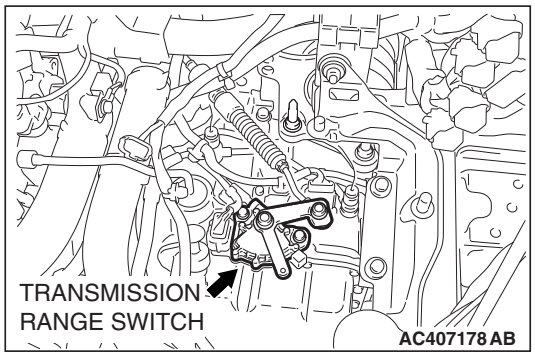

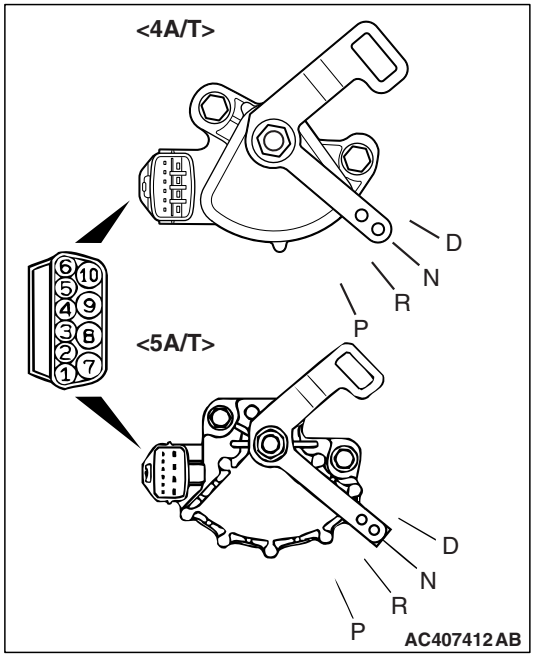

TRANSMISSION RANGE	TERMINAL CONNECTION OF TESTER	SPECIFIED CONDITION
P	3 – 8, 9 – 10	Less than 2 ohms.
R	7 – 8	
N	4 – 8, 9 – 10	
D	1 – 8	

TRANSMISSION RANGE SWITCH AND CONTROL CABLE ADJUSTMENT

M1231021700158

1. Set the selector lever to the "N" position.

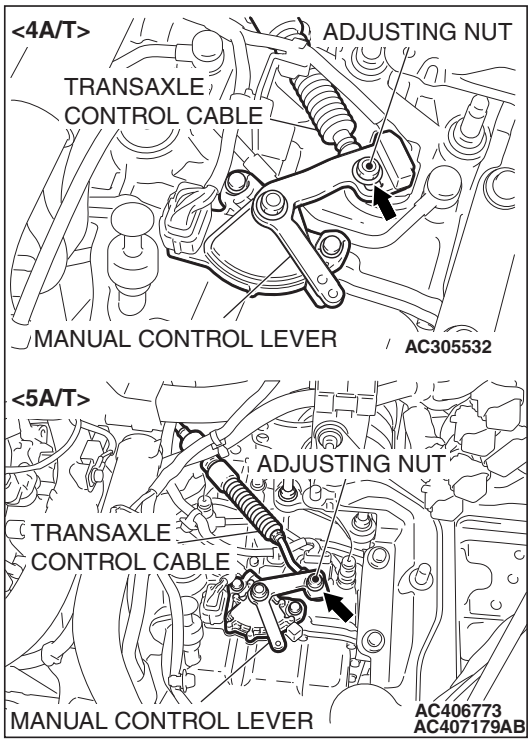

2. Loosen the control cable to the manual control lever coupling nut to free the cable and lever.
3. Set the manual control lever to the neutral position.

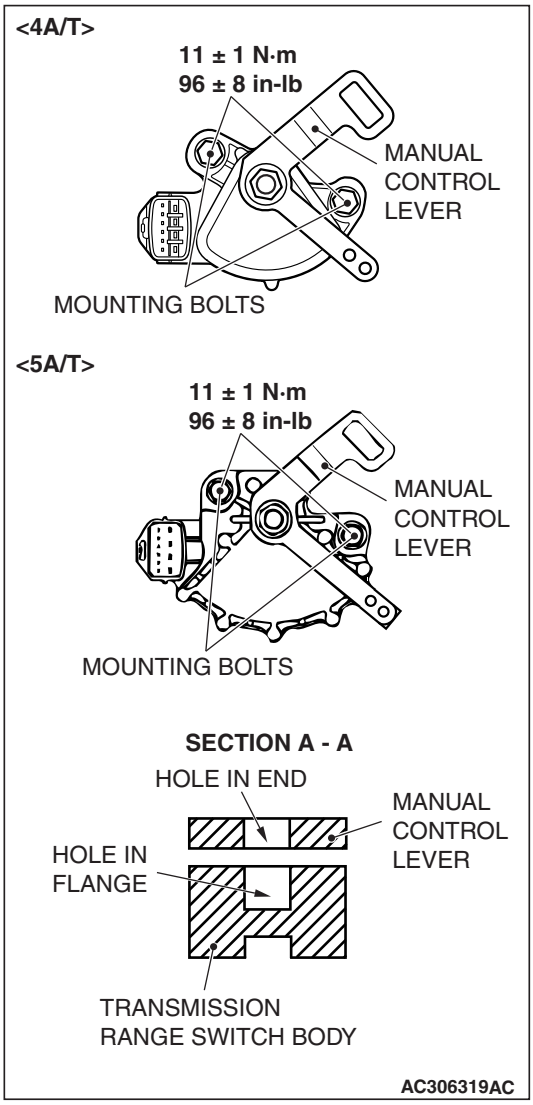

4. Loosen the transmission range switch body mounting bolts and turn the park/neutral position switch body so the hole in the end of the manual control lever and the hole (section A – A in the figure on the left) in the flange of the transmission range switch body flange are aligned.

   NOTE: The transmission range switch body can be aligned by inserting a 5-mm diameter steel bar into the end hole of the manual control lever and the flange hole of the transmission range switch body.
5. Tighten the transmission range switch body mounting bolts to the specified torque. Be careful at this time that the switch body does not move.

   Tightening torque: 11 ± 1 N·m (96 ± 8 in-lb)

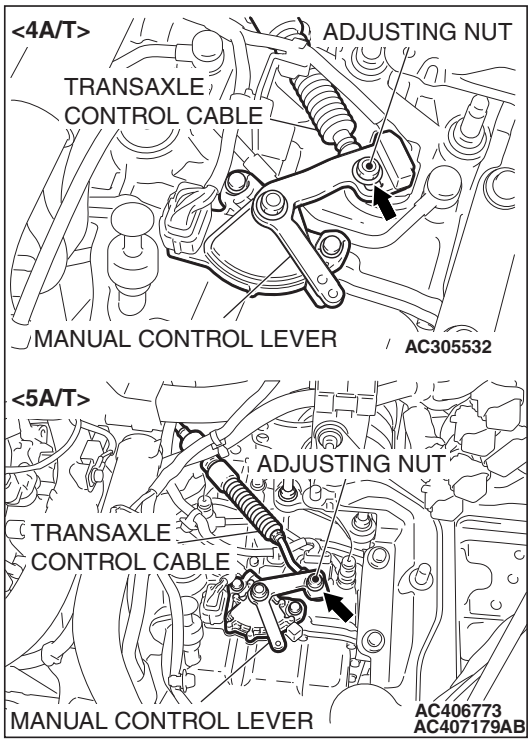

6. Gently push the transaxle control cable in the direction of the arrow, until the cable is taut. Tighten the adjusting nut.

   Tightening torque: 12 ± 2 N·m (107 ± 17 in-lb)

7. Check that the selector lever is in the "N" position.
8. Check that each position of the manual control lever matches each position of the selector lever using scan tool MB991958 (M.U.T.-III sub assembly).

AUTOMATIC TRANSAXLE CONTROL COMPONENT CHECK

CRANKSHAFT POSITION SENSOR CHECK

M1231009000504

Refer to GROUP 13A <2.4L Engine>, Diagnosis – Inspection Procedure Using an Oscilloscope P.13A-1211.
Refer to GROUP 13B <3.8L Engine>, Diagnosis – Inspection Procedure Using an Oscilloscope P.13B-1258.

TRANSMISSION FLUID TEMPERATURE SENSOR CHECK

M1231021800155

1. Remove the transmission fluid temperature sensor.
2. Measure the resistance between terminals 1 and 2 of the transmission fluid temperature sensor connector.

   Standard value:

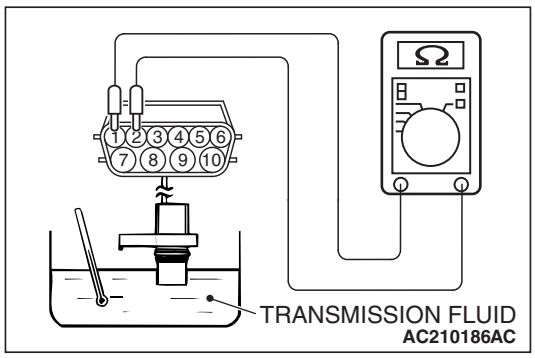

TRANSMISSION FLUID TEMPERATURE	RESISTANCE
0°C (32°F)	16.7 – 20.5 kΩ
20°C (68°F)	7.3 – 8.9 kΩ
40°C (104°F)	3.4 – 4.2 kΩ
60°C (140°F)	1.9 – 2.2 kΩ
80°C (176°F)	1.0 – 1.2 kΩ
100°C (212°F)	0.57 – 0.69 kΩ

3. If the transmission fluid temperature sensor resistance is outside the specified range and the shift indicator light (D or 1 through 4 or 5) is flashing, replace the transmission fluid temperature sensor.

   NOTE: The selector lever position indicator light (D, 1 through 4 or 5) on the combination meter flashes when the temperature reaches approximately 125℃ (257℉) or greater, and then stops flashing when the temperature drops below approximately 115℃ (238℉).

TRANSMISSION RANGE SWITCH CHECK

M1231021600258

Refer to P.23A-396.

STOPLIGHT SWITCH CHECK

M1231009100244

Refer to GROUP 35A, Brake Pedal – Brake Pedal Inspection P.35A-25.

A/T CONTROL RELAY CHECK

M1231009300345

1. Remove the A/T control relay.

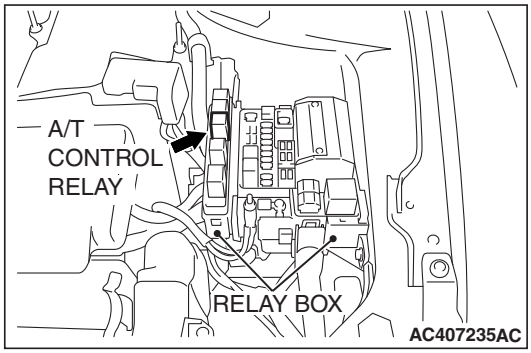

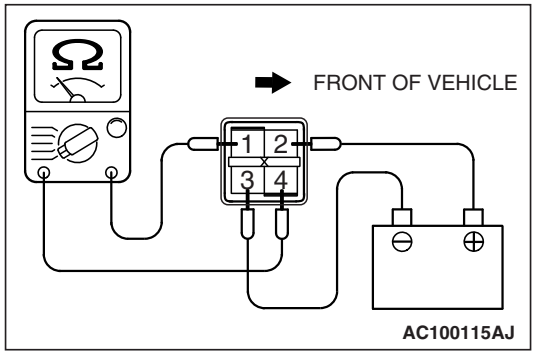

2. Use jumper wires to connect A/T control relay terminal 3 to the negative battery terminal and terminal 2 to the positive battery terminal.
3. Check for continuity between A/T control relay terminals 1 and 4 when the jumper wires are connected to and disconnected from the battery.

JUMPER WIRE	CONTINUITY BETWEEN TERMINALS NO.1 AND NO.4
Connected	Continuity
Disconnected	No continuity

4. If there is any problem with the A/T control relay, replace it.

SOLENOID VALVE CHECK

M1231009400375

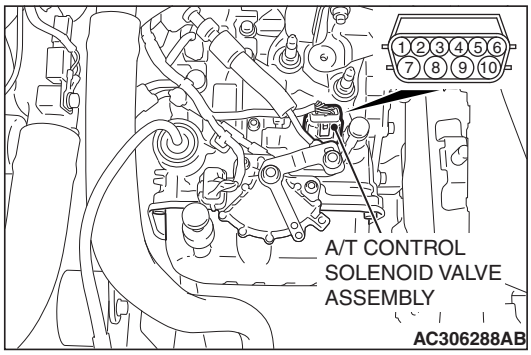

1. Use scan tool MB991958 (M.U.T.-III sub assembly) to check the transmission fluid temperature. The desired transmission fluid temperature for performing the solenoid valve check is 20°C (68°F).
2. Remove the A/T control solenoid valve assembly connector.
3. Measure the resistance between the solenoid valve terminals.
4. The measured resistance of the solenoid valve when the transmission fluid temperature is 20°C (68°F) should match the specified resistance on the chart below.

STANDARD VALVE:

TERMINAL NO.	NAME	RESISTANCE
7 - 10	Torque converter clutch solenoid valve	2.7 – 3.4 Ω [at 20°C (68°F)]
6 - 10	Low-reverse solenoid valve	
4 - 9	Second solenoid valve	
3 - 9	Underdrive solenoid valve	
5 - 9	Overdrive solenoid valve	
8 - 9	Reduction solenoid valve <5A/T>	

5. If the solenoid valve resistance is within the specified range, check the power supply and the ground circuits.
6. If the solenoid valve resistance is not within the specified range, drain the transmission fluid and remove the valve body cover.
7. Disconnect the connector of any solenoid valves that are not within the specified range.

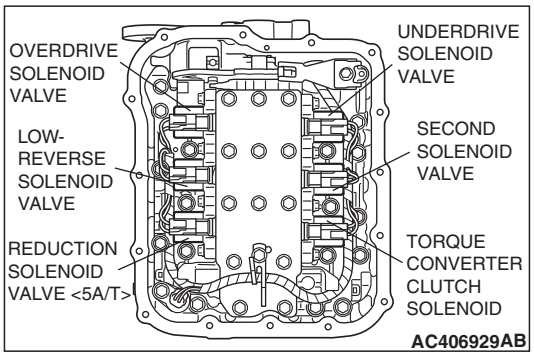

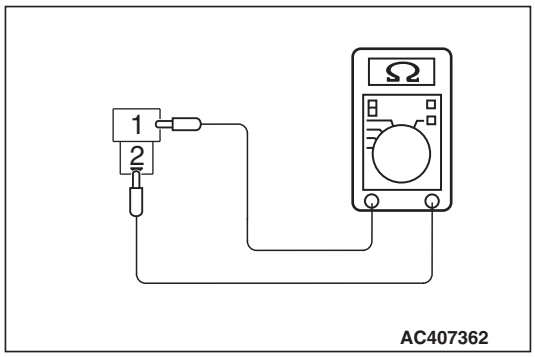

8. Measure the resistance between terminals 1 and 2 of any solenoid valve that was not within the specified range.

   Standard valve: 2.7 – 3.4 Ω [at 20°C (68°F)]

9. If the resistance is not within the specified range, replace the solenoid valve.
10. If the resistance is within the specified range, check the wiring harness between the affected A/T control solenoid valve assembly and the solenoid valve. If a problem is not found in the above steps, check the solenoid valve O-rings and replace them if necessary.

SELECTOR LEVER OPERATION CHECK

M1231001300567

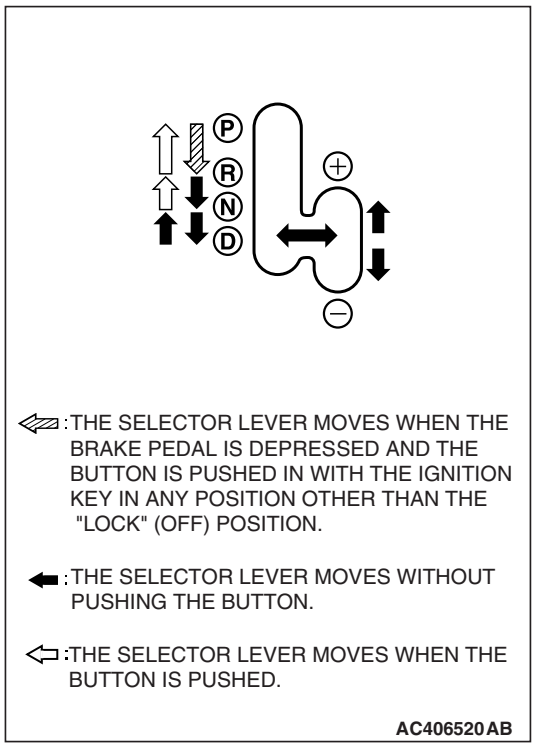

1. Apply the parking brake, and check that the selector lever moves smoothly and accurately to each position.
2. Check that the engine starts when the selector lever is at the "N" or "P" position, and that it does not start when the selector lever is in any other position.
3. Start the engine, release the parking brake, and check that the vehicle moves forward when the selector lever is moved from "N" position to "D" or 1st to 4th gear in Sports mode, and that the vehicle reverses when the selector lever is moved to "R" position.
4. Stop the engine.
5. Turn the ignition switch to the "ON" position, and check that the backup light illuminates when the selector lever is shifted from "P" position to "R" position.

   NOTE: The A/T mis-operation prevention mechanism is provided so that the selector lever cannot be moved from the "P" position if the ignition switch is at a position other than the "LOCK" (OFF) position and the brake pedal is not depressed.

KEY INTERLOCK AND SHIFT LOCK MECHANISM CHECK

M1232003100432

1. Carry out the following inspection.

KEY INTERLOCK SIDE			
INSPECTION PROCEDURE	**INSPECTION REQUIREMENT**	**INSPECTION ITEM (NORMAL CONDITION)**	
1	Brake pedal: Depressed	Ignition key position: "LOCK" (OFF) or removed	Unable to push in the selector lever push button and move the lever out of the "P" position.
2		Ignition key position: "ACC"	Able to push in the selector lever push button, move the lever out of the "P" position, and shift to any position.
3	Brake pedal: Not depressed	Selector lever: Other than "P" position	Unable to turn the ignition key to the "LOCK" (OFF) position.
4		Selector lever: "P" position	Able to turn the ignition key to the "LOCK" (OFF) position.

SHIFT LOCK SIDE			
INSPECTION PROCEDURE	**INSPECTION CONTENTS**		**CHECK DETAILS (NORMAL CONDITION)**
1	Brake pedal: Not depressed	Ignition key position: "ACC"	When the selector lever push button is depressed, the selector lever cannot be shifted out of the "P" position.
2	Brake pedal: Depressed		When the selector lever push button is depressed, the selector lever can be shifted smoothly to another position.
3	Brake pedal: Not depressed		When the selector lever push button is depressed, the selector lever can be shifted smoothly from the "R" position to the "P" position.

2. When any of the above checks are not normal, adjust the key interlock cable and shift lock cable unit by following procedure.
   (1) Remove the front floor console. (Refer to GROUP 52A – Floor Console Assembly P.52A-28).
   (2) Shift selector lever to "P" position.
   (3) Turn the ignition key to "LOCK" (OFF) position.

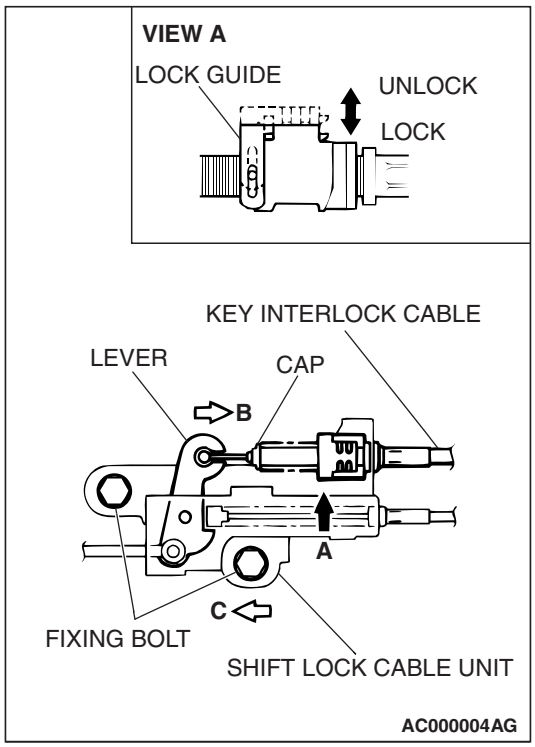

(4) Loosen the bolt fixing the shift lock cable unit, push the lever in direction B and the unit in direction C and tighten the bolt at the standard torque.

Tightening torque: 5.0 ± 1.0 N·m (44 ± 9 in-lb)

(5) Lift the lock guide of the key interlock cable to unlock it.

(6) Lower the lock guide of the key interlock cable and then lock it.

NOTE: The key interlock cable is adjusted according to the lock position (cap push state) at this time. Readjust the lock position if the key interlock still does not operate correctly.

3. After adjustment, re-check the operations. Replace the key interlock cable and shift lock cable unit if operations are defective. (Refer to P.23A-407).

TRANSAXLE CONTROL

REMOVAL AND INSTALLATION

M1231006600682

⚠ WARNING

- ***When removing and installing the transaxle control cable and shift lock cable unit, be careful not to hit the SRS-ECU.***
- ***When removing and installing the front passenger seat, be sure to carry out accuracy check occupant classification sensor after the seat has been installed in the vehicle. (Refer to GROUP 52B, On-vehicle Service P.52B-410.)***

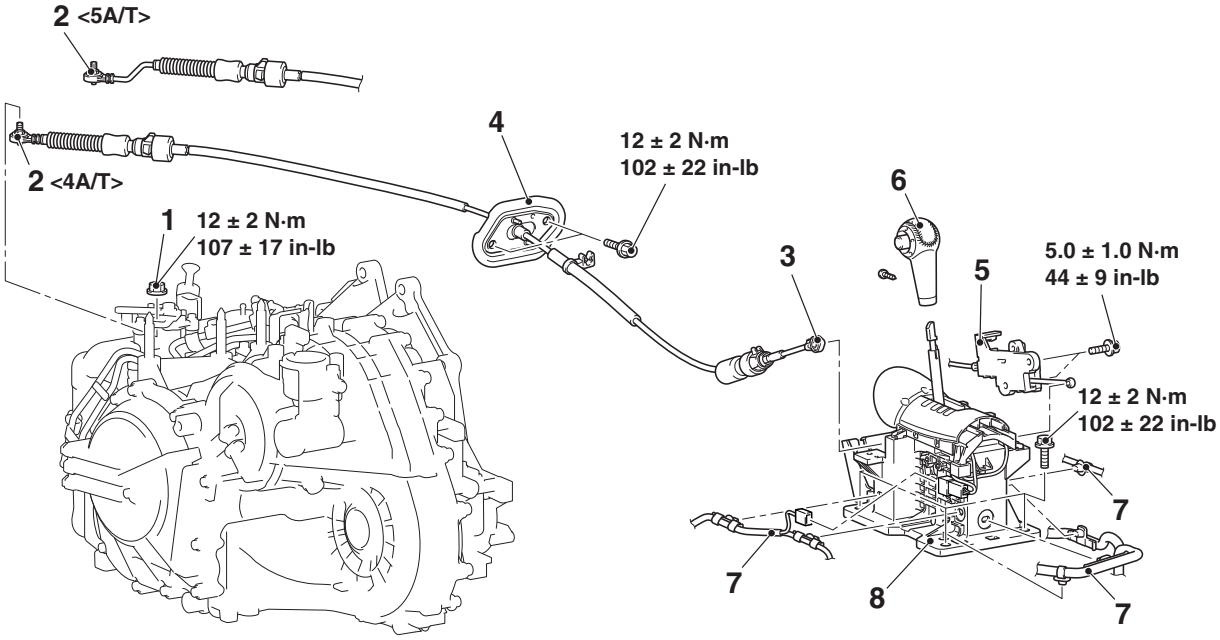

AC406879AB

TRANSAXLE CONTROL CABLE ASSEMBLY REMOVAL STEPS

- AIR CLEANER INTAKE DUCT AND AIR CLEANER BODY (REFER TO GROUP 15 P.15-4 <4A/T> OR P.15-5 <5A/T>.)
- BATTERY AND BATTERY TRAY
- POWERTRAIN CONTROL MODULE (PCM) (REFER TO GROUP 13A P.13A-1247 <2.4L ENGINE> OR GROUP13B P.13B-1291 <3.8L ENGINE>.)
- HEATER UNIT AND DECK CROSSMEMBER ASSEMBLY (REFER TO GROUP 55A, HEATER UNIT, HEATER CORE, BLOWER ASSEMBLY AND EVAPORATOR UNIT P.55A-197.)

>>**B**<< 1. ADJUSTING NUT

>>**B**<< 2. TRANSAXLE CONTROL CABLE ASSEMBLY CONNECTION (TRANSAXLE SIDE)

TRANSAXLE CONTROL CABLE ASSEMBLY REMOVAL STEPS (Continued)

3. TRANSAXLE CONTROL CABLE ASSEMBLY CONNECTION (SELECTOR LEVER ASSEMBLY SIDE)
4. TRANSAXLE CONTROL CABLE ASSEMBLY

SELECTOR LEVER ASSEMBLY ASSEMBLY REMOVAL STEPS

- FLOOR CONSOLE (REFER TO GROUP 52A, FLOOR CONSOL ASSEMBLY P.52A-28)

3. TRANSAXLE CONTROL CABLE ASSEMBLY CONNECTION (SELECTOR LEVER ASSEMBLY SIDE)

>>**A**<< 5. SHIFT LOCK CABLE UNIT

6. SELECTOR LEVER KNOB
7. EACH HARNESS AND CONNECTOR CONNECTION
8. SELECTOR LEVER ASSEMBLY

INSTALLATION SERVICE POINTS

>>A<< SHIFT LOCK CABLE UNIT INSTALLATION

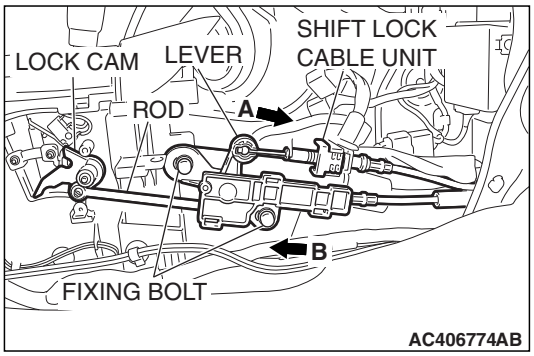

1. Place the selector lever in "P" position.
2. Turn the ignition key to "LOCK" (OFF) position.
3. Install the rod of the shift lock cable unit to the lock cam, push the lever in direction A, push the shift lock cable unit in direction B and tighten the fixing bolt at the standard torque.

   Tightening torque: 5.0 ± 1.0 N·m (44 ± 9 in-lb)
4. Check the selector lever operation.(Refer to P.23A-401).

>>B<< TRANSAXLE CONTROL CABLE ASSEMBLY (TRANSAXLE SIDE)/ADJUSTING NUT INSTALLATION

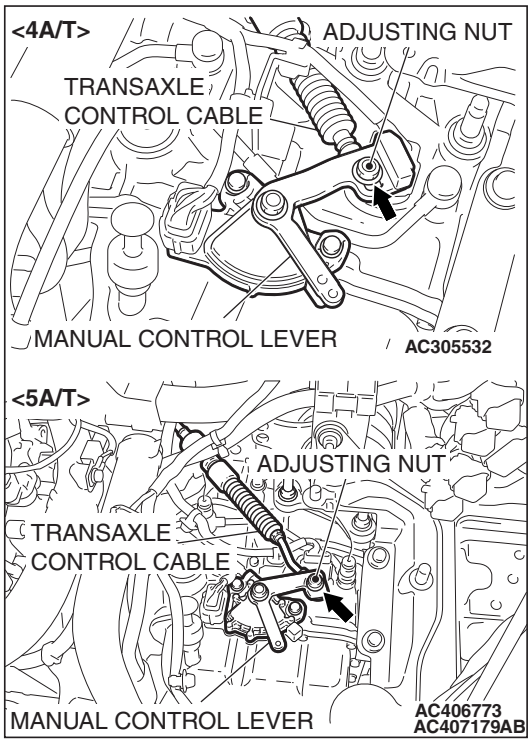

1. Place the selector lever and manual control lever in the "N" position.
2. Place the cable stud into the manual control lever slot and install the nut loosely. Gently push the transaxle control cable into the manual control lever slot until the cable is taut. Tighten the nut to the specified torque.

   Tightening torque: 12 ± 2 N·m (107 ± 17 in-lb)

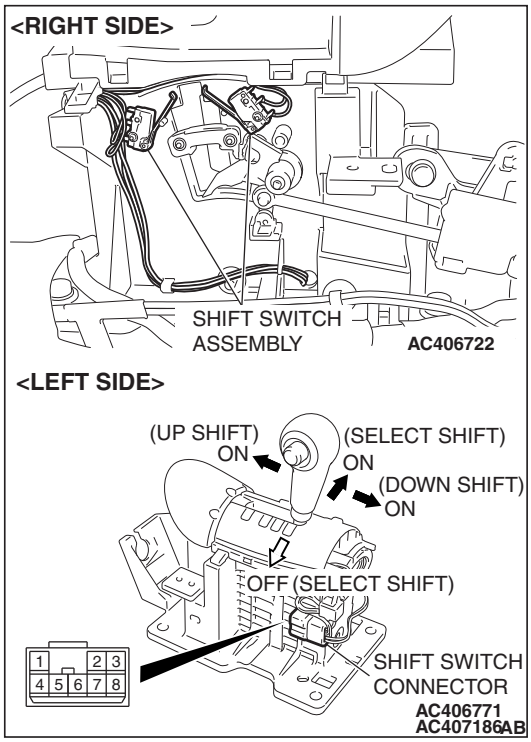

INSPECTION

M1231006900285

SHIFT SWITCH ASSEMBLY CONTINUITY CHECK <VEHICLES WITH SPORT MODE>

SWITCH POSITION		TERMINAL NO.
Select switch (select shift)	ON	1 – 6
	OFF	1 – 8
Shift switch (up shift)	ON	2 – 7
	OFF	–
Shift switch (down shift)	ON	2 – 3
	OFF	–

A/T KEY INTERLOCK AND SHIFT LOCK MECHANISMS

REMOVAL AND INSTALLATION

M1232001200682

⚠ WARNING

- ***When removing and installing the shift lock cable unit and key interlock cable, be careful not to hit the SRS-ECU.***
- ***When removing and installing the front passenger seat, be sure to carry out accuracy check occupant classification sensor after the seat has been installed in the vehicle. (Refer to GROUP 52B, On-vehicle Service P.52B-410.)***

Pre-removal Operation	Post-installation Operation
• Floor Console Removal (Refer to GROUP 52A, Floor Console Assembly P.52A-28.) • Lower Column Cover Removal (Refer to GROUP 37, Steering Shaft P.37-29.) • Accelerator Pedal Assembly Removal (Refer to GROUP 17, Accelerator Cable and Pedal P.17-9.) • Instrument Lower Panel Assembly Removal (Refer to GROUP 52A, Instrument Panel Assembly P.52A-19.)	• Accelerator Pedal Assembly Installation (Refer to GROUP 17, Accelerator Cable and Pedal P.17-9.) • Floor Console Installation (Refer to GROUP 52A, Floor Console Assembly P.52A-28.) • Lower Column Cover Installation (Refer to GROUP 37, Steering Shaft P.37-29.) • Key Interlock and Shift Lock Mechanism Check (Refer to P.23A-402.) • Instrument Lower Panel Assembly Installation (Refer to GROUP 52A, Instrument Panel Assembly P.52A-19.)

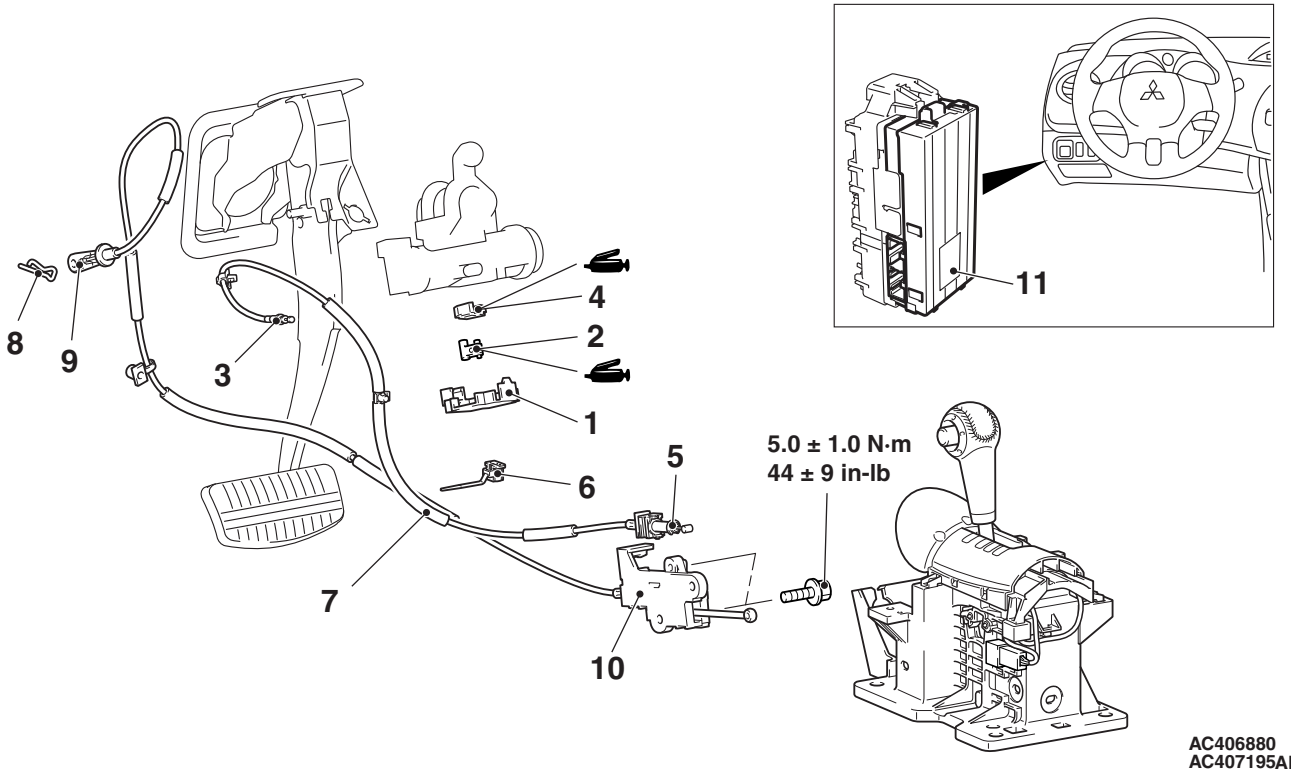

AC406880
AC407195AB

KEY INTERLOCK CABLE REMOVAL STEPS

1. COVER
2. LOCK CAM (STEERING LOCK CYLINDER SIDE)
3. KEY INTERLOCK CABLE (STEERING LOCK CYLINDER SIDE) CONNECTION
4. SLIDER

KEY INTERLOCK CABLE REMOVAL STEPS (Continued)

5. KEY INTERLOCK CABLE (SELECTOR LEVER SIDE) CONNECTION
6. CABLE BAND
7. KEY INTERLOCK CABLE

TSB Revision

SHIFT LOCK CABLE UNIT
REMOVAL STEPS

8. COTTER PIN
>>**B**<< 9. SHIFT LOCK CABLE UNIT (BRAKE PEDAL SIDE) CONNECTION
<<**A**>> >>**A**<< 10. SHIFT LOCK CABLE UNIT
ETACS-ECU REMOVAL
- INSTRUMENT LOWER PANEL (REFER TO GROUP 52A P.52A-19.)

11. ETACS-ECU

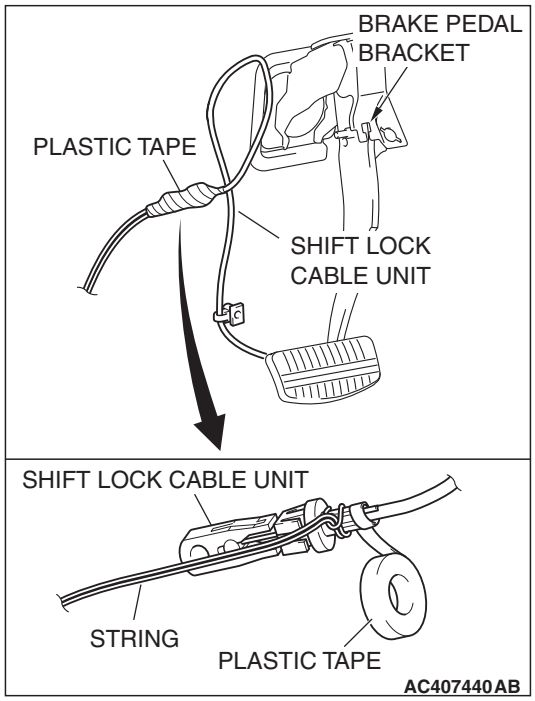

REMOVAL SERVICE POINTS

<<A>> SHIFT LOCK CABLE UNIT REMOVAL

Remove the shift lock cable from the vehicle as follows.

1. Remove the shift lock cable unit from the brake pedal bracket.
2. Bind up the cap of shift lock cable unit with a string.

⚠ CAUTION

Bind up it securely so that the string will not loosen.

3. Wind a plastic tape around the string bound to the shift lock cable unit.
4. To remove the shift lock cable unit pull it slowly and thread the string behind the heater unit.

INSTALLATION SERVICE POINTS

>>A<< SHIFT LOCK CABLE UNIT INSTALLATION

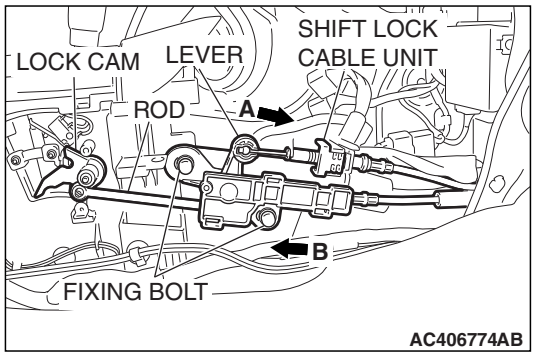

1. Selector lever to "P" position.
2. Turn the ignition key to "LOCK" (OFF) position.
3. Install the rod of the shift lock cable unit to the lock cam, push the lever in direction A, push the shift lock cable unit in direction B and tighten the fixing bolt at the standard torque.

   Tightening torque: 5.0 ± 1.0 N·m (44 ± 9 in-lb)
4. Check the selector lever operation. (Refer to P.23A-401)

>>B<< SHIFT LOCK CABLE UNIT (BRAKE PEDAL SIDE) INSTALLATION

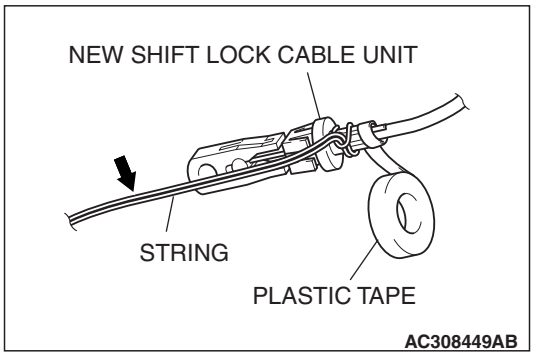

⚠ CAUTION

When threading the shift lock cable unit behind the heater unit, wind a plastic tape around it up to the arrow as shown so that the shift lock cable unit will not be bent.

1. Bind up the cap of new shift lock cable unit with the string threaded behind the heater unit when removing and wind a plastic tape around it.
2. Pull the string slowly and thread the shift lock cable unit behind the heater unit.
3. Remove the string and the plastic tape from the shift lock cable unit, and then install the shift lock cable unit to the brake pedal bracket.

INSPECTION

M1231030000191

Check the cable assembly for proper operation and for damage.

TRANSAXLE ASSEMBLY

REMOVAL AND INSTALLATION

M1231005700998

<4A/T>

⚠ CAUTION

***: Indicates parts which should be temporarily tightened, and then fully tightened after placing the vehicle horizontally and loading the full weight of the engine on the vehicle body.**

Pre-installation Operation	Post-installation Operation
• Engine Coolant Draining (Refer to GROUP 14, On-vehicle Service P.14-22.) • Side Under Cover (LH) Removal (Refer to GROUP 51, Under Cover P.51-8). • Transmission Fluid Draining (Refer to GROUP 00, Maintenance Service – Automatic Transaxle P.00-65.) • Air Cleaner Assembly Removal (Refer to GROUP 15, Air Cleaner P.15-4.) • Powertrain Control Module (PCM) Removal (Refer to GROUP 13A P.13A-1247.) • Battery and Battery Tray Removal	• Battery and Battery Tray Installation • Powertrain Control Module (PCM) Installation (Refer to GROUP 13A P.13A-1247.) • Air Cleaner Assembly Installation (Refer to GROUP 15, Air Cleaner P.15-4.) • Transmission Fluid Supplying (Refer to GROUP 00, Maintenance Service – Automatic Transaxle P.00-65.) • Engine Coolant Supplying (Refer to GROUP 14, On-vehicle Service P.14-22.) • Selector Lever Operation Check (Refer to P.23A-401.) • Speedometer Operation Check (Refer to GROUP 54A, Combination Meter – On-vehicle Service – Speedometer Check P.54A-131.) • Side Under Cover (LH) Installation (Refer to GROUP 51, Under Cover P.51-8). • Front Wheel Alignment Check and Adjustment (Refer to GROUP 33, On-vehicle Service – Front Wheel Alignment Check and Adjustment P.33-6.)

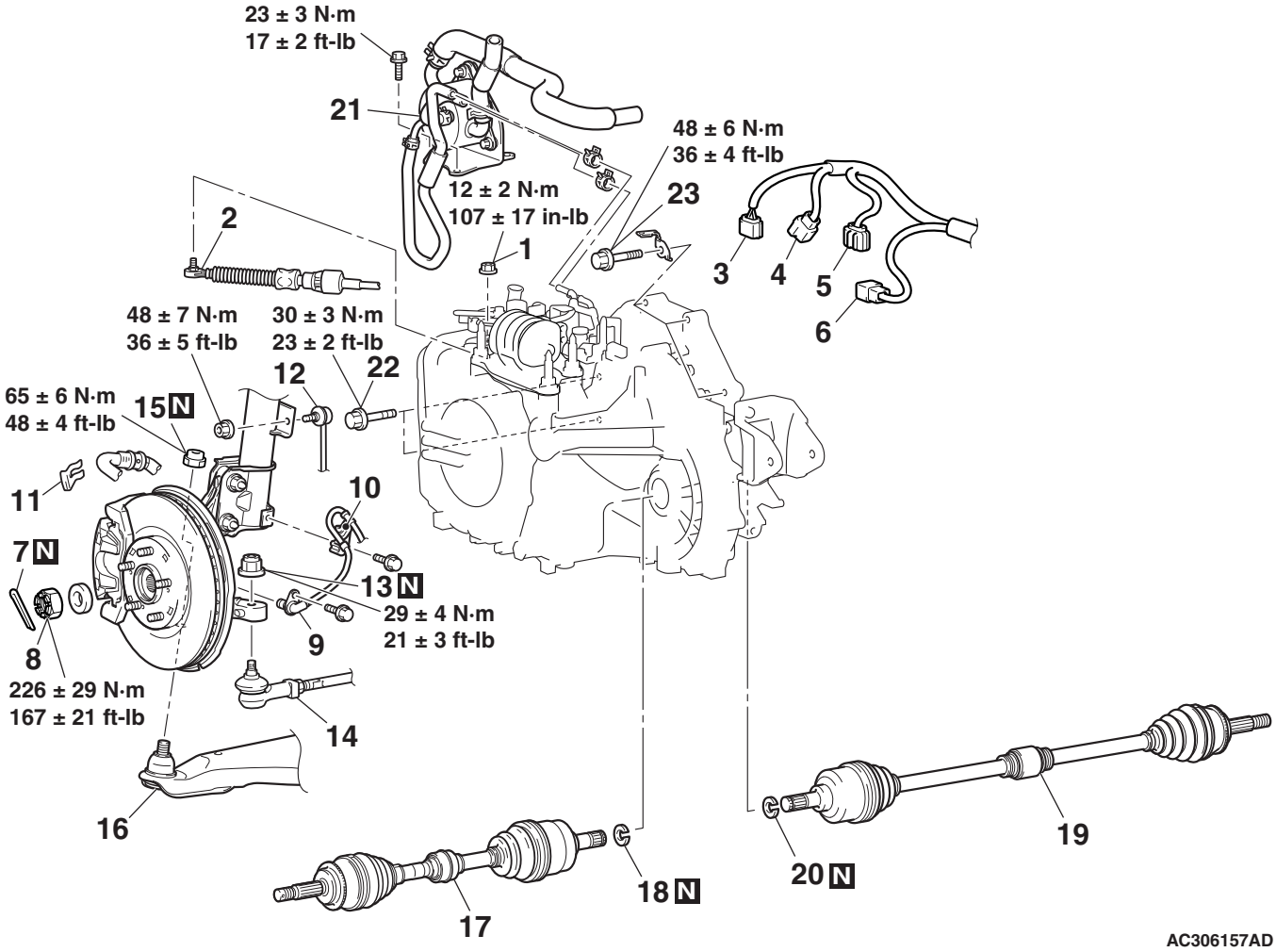

TSB Revision

REMOVAL STEPS

>>E<< 1. ADJUSTING NUT
>>E<< 2. TRANSAXLE CONTROL CABLE CONNECTION
3. TRANSMISSION RANGE SWITCH CONNECTOR
4. A/T CONTROL SOLENOID VALVE ASSEMBLY CONNECTOR
5. INPUT SHAFT SPEED SENSOR CONNECTOR
6. OUTPUT SHAFT SPEED SENSOR CONNECTOR
7. SPLIT PIN
<<A>> >>D<< 8. DRIVE SHAFT NUT
9. WHEEL SPEED SENSOR
10. WHEEL SPEED SENSOR BRACKET
11. BRAKE HOSE CLAMP
12. STABILIZER LINK CONNECTION <STRUT SIDE>

REMOVAL STEPS (Continued)

13. SELF-LOCKING NUT (CONNECTION FOR TIE ROD END)
<<B>> 14. TIE ROD END CONNECTION
15. SELF-LOCKING NUT (CONNECTION FOR LOWER ARM BALL JOINT)
<<B>> 16. LOWER ARM BALL JOINT CONNECTION
<<C>> >>C<< 17. DRIVE SHAFT <LH>
18. CIRCLIP
<<C>> >>C<< 19. DRIVE SHAFT <RH>
20. CIRCLIP
21. ATF WARMER (TRANSMISSION FLUID COOLER) ASSEMBLY
22. STARTER MOTOR ATTACHING BOLTS
23. TRANSAXLE ASSEMBLY UPPER PART COUPLING BOLTS

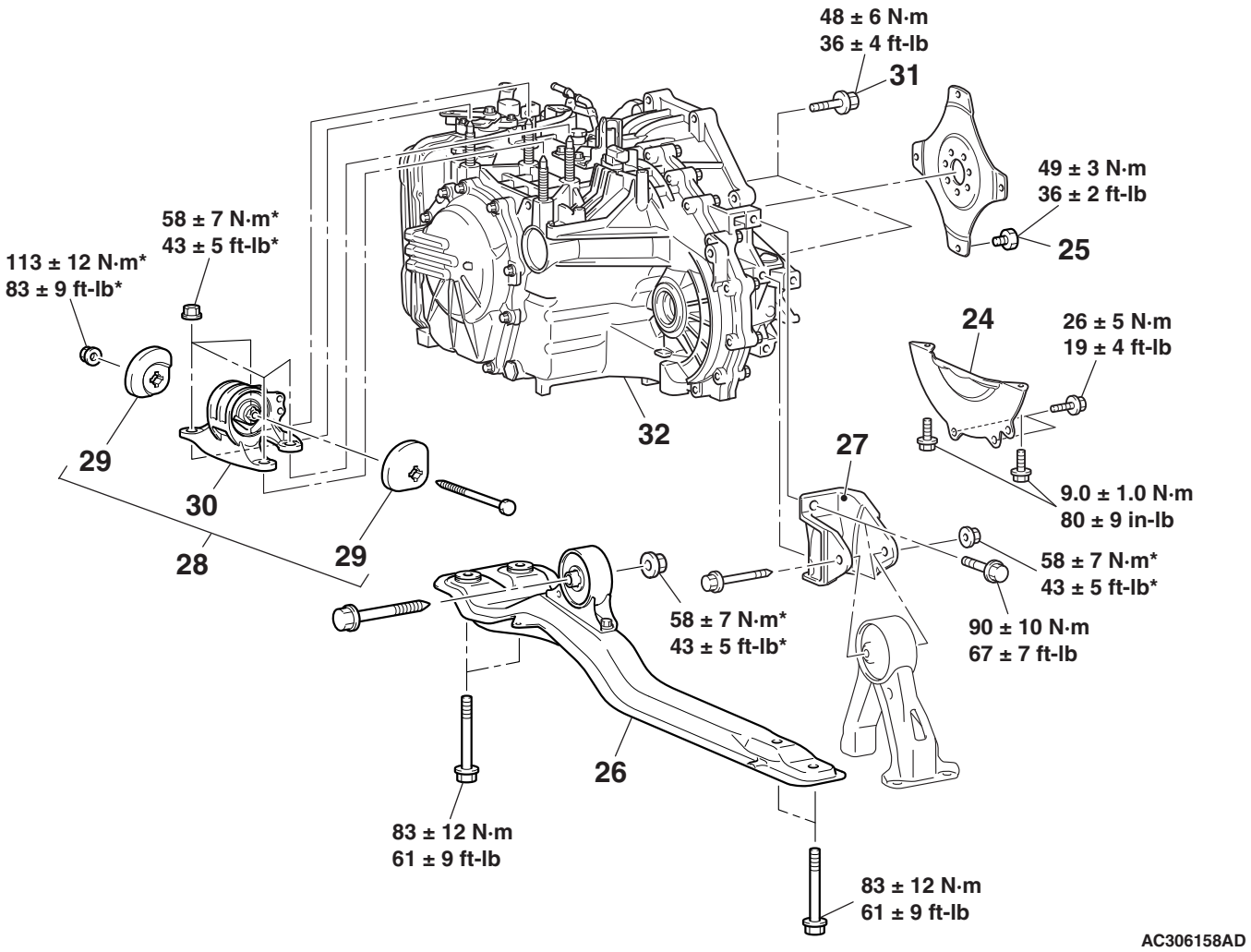

REMOVAL STEPS

24. BELL HOUSING COVER

<<D>>

25. TORQUE CONVERTER AND DRIVE PLATE COUPLING BOLTS
26. CENTER MEMBER ASSEMBLY
    - FRONT No.1 EXHAUST PIPE AND FRONT No.2 EXHAUST PIPE CONNECTION (REFER TO GROUP 15, EXHAUST PIPE AND MAIN MUFFLER P.15-24.)
27. REAR ROLL STOPPER BRACKET
    - AIR CLEANER BRACKET
28. TRANSAXLE MOUNTING BRACKET ASSEMBLY

REMOVAL STEPS (Continued)

>>B<<

29. TRANSAXLE MOUNTING STOPPER
30. TRANSAXLE MOUNTING BODY SIDE BRACKET

<<E>>

    - ENGINE ASSEMBLY SUPPORT
    - LIFT UP THE VEHICLE
    - SUPPORT THE TRANSAXLE WITH A TRANSAXLE JACK
31. TRANSAXLE ASSEMBLY LOWER PART COUPLING BOLTS

>>A<<

32. TRANSAXLE ASSEMBLY

Required Special Tools:

- MB990242: Puller Shaft Puller
- MB990244: Puller Bar
- MB990767: End Yoke Holder
- MB990998: Front Hub Remover and Installer
- MB991000: Spacer
- MB991354: Puller Body
- MB991454: Engine Hanger Balancer (chain)
- MB991527: Hanger
- MB991928: Engine Hanger
- MB991930: Joint (90)
- MB991932: Foot (standard)
- MB991933: Foot (short)
- MB991934: Chain and Hook Assembly
- MB991895: Engine Hanger
- MB991897: Ball Joint Remover

REMOVAL SERVICE POINTS

<<A>> DRIVE SHAFT NUT REMOVAL

⚠ CAUTION

Do not apply pressure to the wheel bearing by the vehicle weight to avoid possible damage when the drive shaft nut is loosened.

Use special tool MB990767 to secure the hub and remove the drive shaft nut.

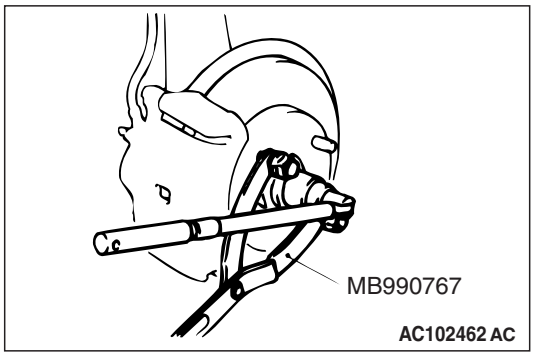

<<B>> TIE ROD END CONNECTION/LOWER ARM BALL JOINT CONNECTION REMOVAL

⚠ CAUTION

- **Do not remove the nut from ball joint. Loosen it and use the special tool to avoid possible damage to ball joint threads.**
- **Hang the special tool with cord to prevent it from falling.**

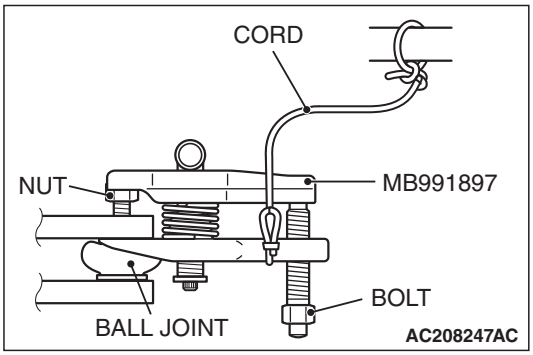

1. Replace the self locking nut with a regular nut, because the original one is a little bit large to install the special tool. Install special tool MB991897 as shown in the figure.

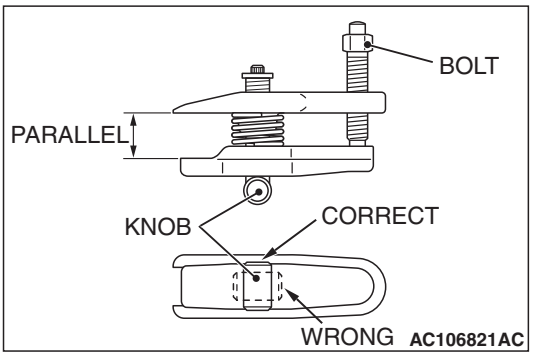

2. Turn the bolt and knob as necessary to make the jaws of special tool MB991897 parallel, tighten the bolt by hand and confirm that the jaws are still parallel.

   NOTE: When adjusting the jaws in parallel, make sure the knob is in the position shown in the figure.

3. Tighten the bolt with a wrench to disconnect the tie rod end and remove the self locking nut.

<<C>> DRIVE SHAFT REMOVAL

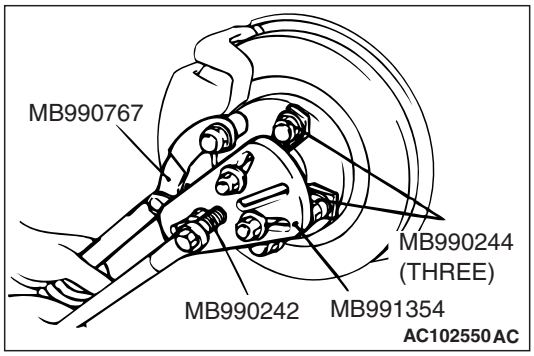

1. Use special tools MB990242, MB990244, MB991354 and MB990767 to push out the drive shaft or the drive shaft and inner shaft assembly from the hub.

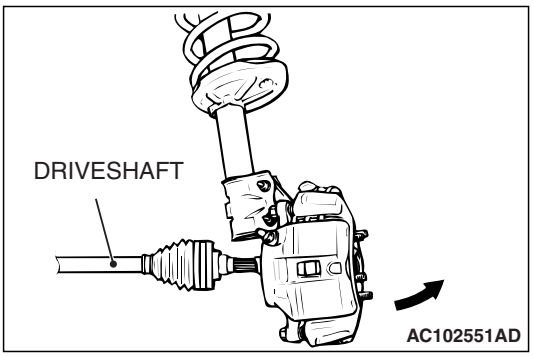

2. Remove the drive shaft from the hub by pulling the bottom of the brake disc towards you.

⚠ CAUTION

- **Do not pull on the drive shaft; doing so will damage the TJ; be sure to use the pry bar.**
- **When pulling the drive shaft out from the transaxle, be careful that the spline part of the drive shaft does not damage the oil seal.**

3. Remove the drive shaft from the transaxle by the following procedure. Insert a pry bar between the transaxle case and the drive shaft, and then pry the drive shaft from the transaxle.

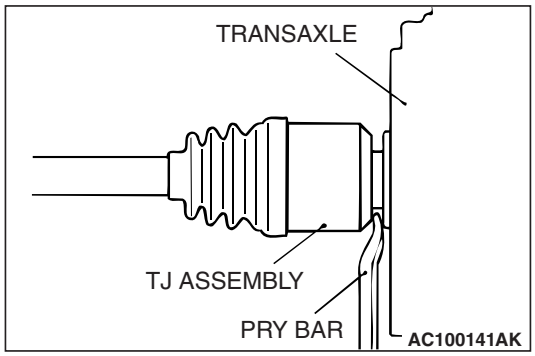

⚠ CAUTION

Do not apply pressure to the wheel bearing by the vehicle weight to avoid possible damage when the drive shaft is removed. If, however, vehicle weight must be applied to the bearing to move the vehicle, temporarily secure the wheel bearing by using special tools MB991000 and MB990998.

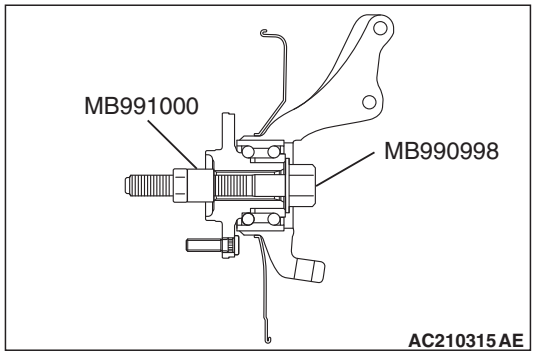

<<D>> TORQUE CONVERTEER AND DRIVE PLATE COUPLING BOLTS REMOVAL

1. Remove the drive plate coupling bolts while turning the crank shaft.
2. Pry the torque converter towards the transaxle side. Remove the torque converter with the transaxle.

<<E>> ENGINE ASSEMBLY SUPPORTING

1. <Engine hanger MB991895 is used>
   (1) Set special tool MB991895 to the front fender mounting bolts (A and B) and the radiator support upper insulator mounting bolts (C and D), which are located in the engine compartment, as shown.

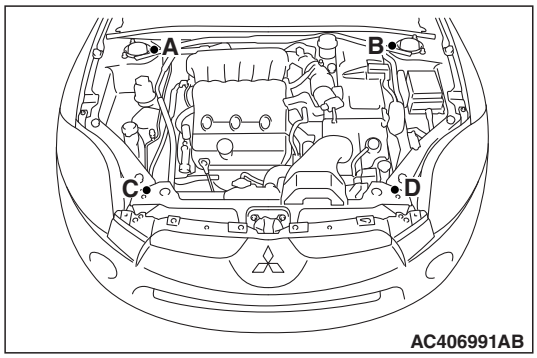

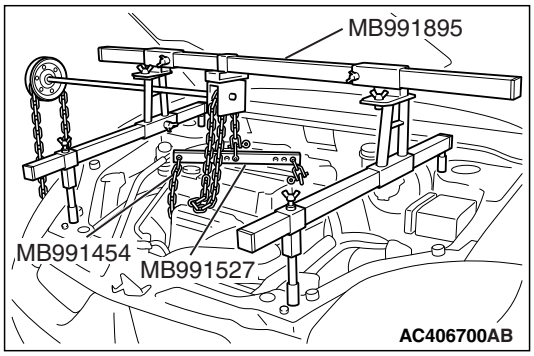

(2) Set special tool MB991527 and MB991454 (chain) to hold the engine/transaxle assembly.

2. <Engine hanger MB991928 is used>
   (1) Assemble the engine hanger (special tool MB991928). Set following parts to the base hanger.
   - Slide bracket (HI)
   - Foot (standard) (MB991932)
   - Joint (140) (MB991931)

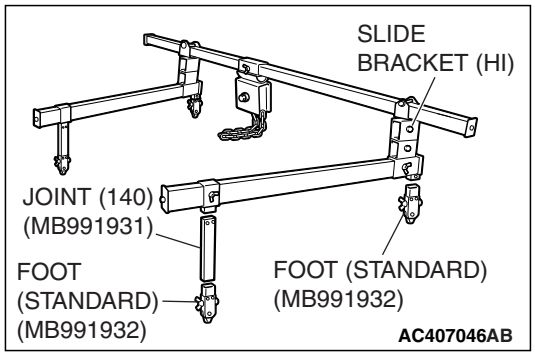

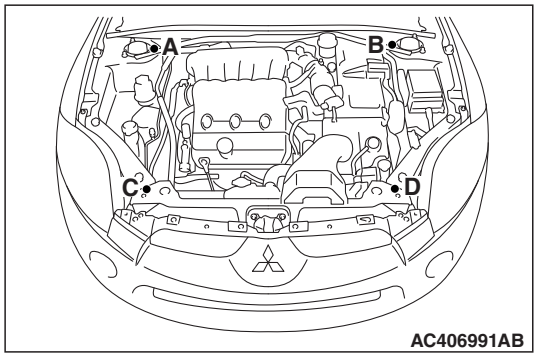

(2) Set the engine hanger (special tool MB991928) to the front fender mounting bolts (A and B) and the radiator support upper insulator mounting bolts (C and D), which are located in the engine compartment, as shown.

NOTE: Adjust the engine hanger balance by sliding the slide bracket (HI).

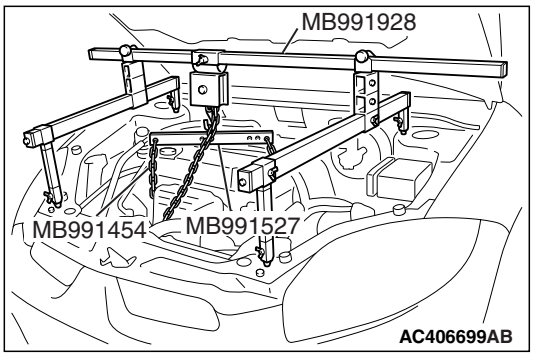

(3) Set special tools MB991527 and MB991454 (chain) to hold the engine/transaxle assembly.

INSTALLATION SERVICE POINT

>>A<< TRANSAXLE ASSEMBLY INSTALLATION

Engage the torque converter into the transaxle side securely, and then assemble the transaxle assembly on the engine.

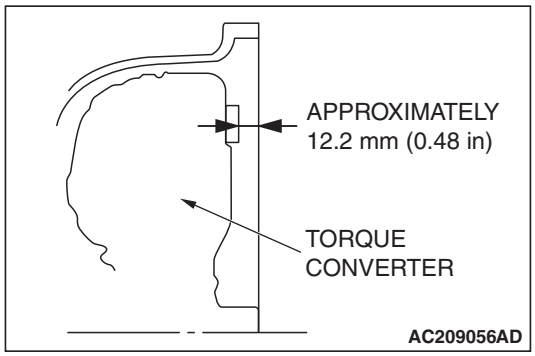

>>B<< TRANSAXLE MOUNTING STOPPER INSTALLATION

Install the transaxle mounting stopper so that its arrow points upward.

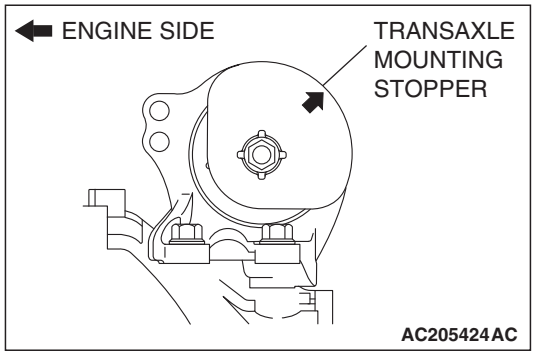

>>C<< DRIVE SHAFT INSTALLATION

⚠ CAUTION

When installing the drive shaft, be careful that the spline part of the drive shaft do not damage the oil seal.

>>D<< DRIVE SHAFT NUT INSTALLATION

1. Be sure to install the drive shaft washer in the specified direction.

⚠ CAUTION

Before securely tightening the drive shaft nuts, make sure there is no load on the wheel bearings. Otherwise the wheel bearing will be damaged.

2. Using special tool MB990767, tighten the drive shaft nut to the specified torque.

   Tightening torque: 226 ± 29 N·m (167 ± 21 ft-lb)

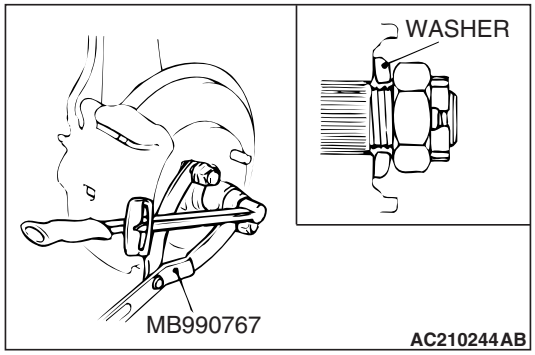

>>E<< TRANSAXLE CONTROL CABLE/ADJUSTING NUT INSTALLATION

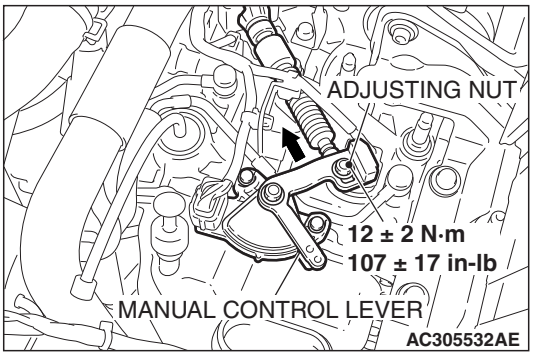

1. Place the selector lever and manual control lever in the “N” position.
2. Place the cable stud into the manual control lever slot and install the nut loosely. Gently push the transaxle control cable into the manual control lever slot until the cable is taut. Tighten the nut to the specified torque.

   Tightening torque: 12 ± 2 N·m (107 ± 17 in-lb)

REMOVAL AND INSTALLATION

M1231005701009

<5A/T>

⚠ CAUTION

***: Indicates parts which should be temporarily tightened, and then fully tightened after placing the vehicle horizontally and loading the full weight of the engine on the vehicle body.**

Pre-installation Operation	Post-installation Operation
• Side Under Cover (LH) Removal (Refer to GROUP 51, Under Cover P.51-8). • Transmission Fluid Draining (Refer to GROUP 00, Maintenance Service – Automatic Transaxle P.00-65.) • Strut Tower Bar Removal (Refer to GROUP 42, Strut Tower Bar P.42-14.) • Engine Cover Removal (Refer to GROUP 11C, Engine Assembly P.11C-24.) • Air Cleaner Assembly and Air Cleaner Resonator Removal (Refer to GROUP 15, Air Cleaner P.15-5). • Powertrain Control Module (PCM) Removal (Refer to GROUP 13B P.13B-1291.) • Battery and Battery Tray Removal • Front No.1 Exhaust Pipe and Front No.2 Exhaust Pipe Removal (Refer to GROUP 15, Exhaust Pipe and Main Muffler P.15-26). • Starter Assembly Removal (Refer to GROUP 16, Starter Motor Assembly P.16-29). • Radiator Upper Hose Removal (Refer to GROUP 14, Radiator P.14-26). • Engine Coolant Draining (Refer to GROUP 14, On-vehicle Service P.14-22). • Intake Manifold Plenum Removal (Refer to GROUP 15 P.15-7). • Left Bank Heated Oxygen Sensor (Front, Rear) connector and Right Bank Heated Oxygen Sensor (Front, Rear) connector Removal (Refer to GROUP 15, Exhaust Manifold P.15-7). • Engine Oil Dipstick Removal	• Engine Oil Dipstick Installation • Front No.1 Exhaust Pipe and Front No.2 Exhaust Pipe Installation (Refer to GROUP 15, Exhaust Pipe and Main Muffler P.15-26). • Starter Assembly Installation (Refer to GROUP 16, Starter Motor Assembly P.16-29). • Radiator Upper Hose Installation (Refer to GROUP 14, Radiator P.14-26). • Intake Manifold Plenum Installation (Refer to GROUP 15 P.15-7). • Battery and Battery Tray Installation • Powertrain Control Module (PCM) Installation (Refer to GROUP 13B P.13B-1291.) • Air Cleaner Assembly and Air Cleaner Resonator Installation (Refer to GROUP 15, Air Cleaner P.15-5). • Strut Tower Bar Installation (Refer to GROUP 42, Strut Tower Bar P.42-14.) • Transmission Fluid Supplying (Refer to GROUP 00, Maintenance Service – Automatic Transaxle P.00-65.) • Side Under Cover (LH) Installation (Refer to GROUP 51, Under Cover P.51-8). • Engine Cover Installation (Refer to GROUP 11C, Engine Assembly P.11C-24.) • Engine Coolant Draining (Refer to GROUP 14, On-vehicle Service P.14-22). • Left Bank Heated Oxygen Sensor (Front, Rear) connector and Right Bank Heated Oxygen Sensor (Front, Rear) connector Installation (Refer to GROUP 15, Exhaust Manifold P.15-7). • Selector Lever Operation Check (Refer to P.23A-401.) • Speedometer Operation Check (Refer to GROUP 54A, Combination Meter – On-vehicle Service – Speedometer Check P.54A-131.) • Front Wheel Alignment Check and Adjustment (Refer to GROUP 33, On-vehicle Service – Front Wheel Alignment Check and Adjustment P.33-6.)

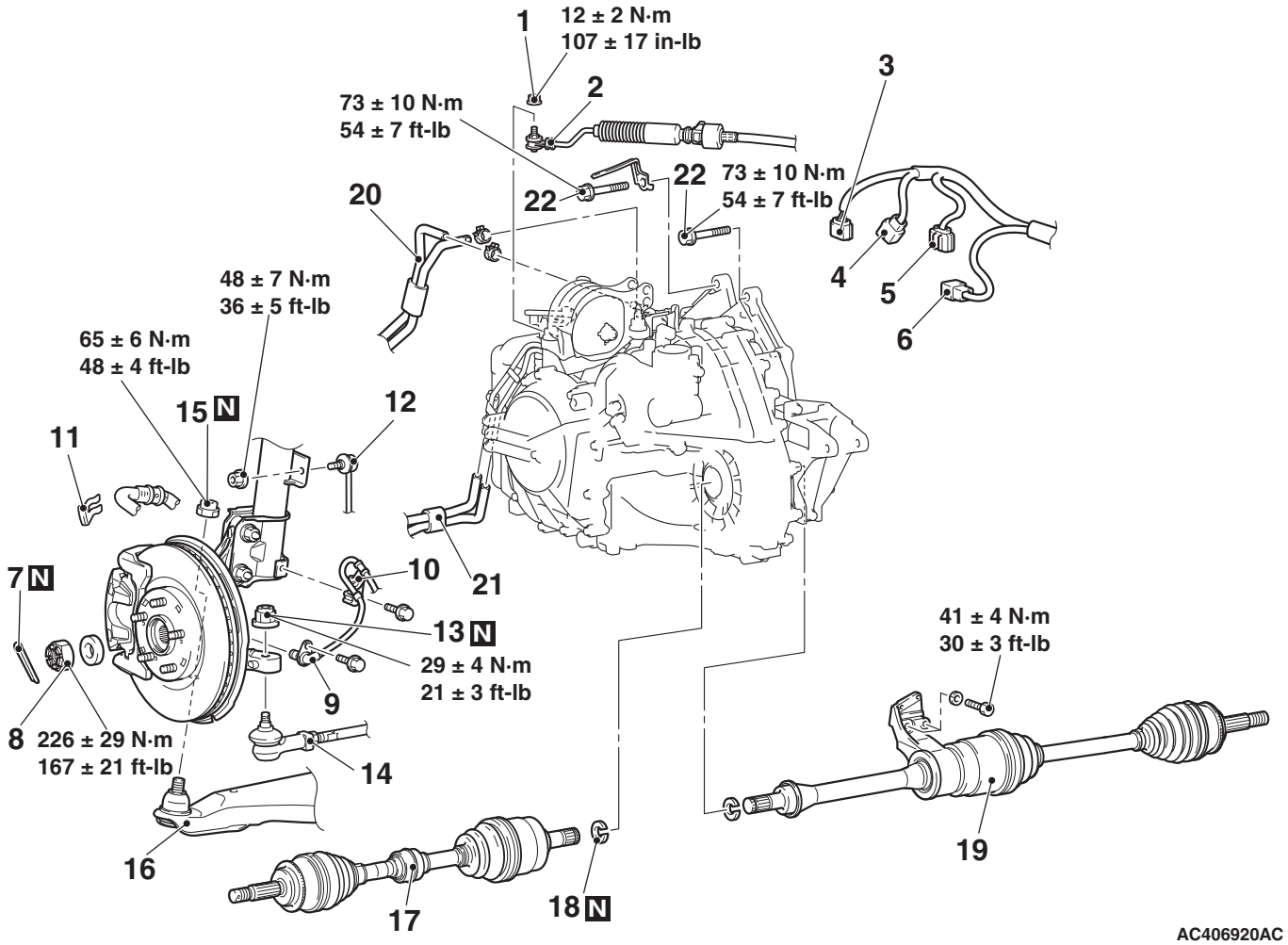

REMOVAL STEPS

>>E<< 1. ADJUSTING NUT
>>E<< 2. TRANSAXLE CONTROL CABLE CONNECTION
3. INHIBITOR SWITCH SENSOR CONNECTOR
4. A/T CONTROL SOLENOID VALVE ASSEMBLY CONNECTOR
5. INPUT SHAFT SPEED SENSOR CONNECTOR
6. OUTPUT SHAFT SPEED SENSOR CONNECTOR
7. SPLIT PIN
<<A>> >>D<< 8. DRIVE SHAFT NUT
9. WHEEL SPEED SENSOR
10. WHEEL SPEED SENSOR BRACKET
11. BRAKE HOSE CLAMP
12. STABILIZER LINK CONNECTION <STRUT SIDE>

REMOVAL STEPS (Continued)

13. SELF-LOCKING NUT (CONNECTION FOR TIE ROD END)
<<B>> 14. TIE ROD END CONNECTION
15. SELF-LOCKING NUT (CONNECTION FOR LOWER ARM BALL JOINT)
<<B>> 16. LOWER ARM BALL JOINT CONNECTION
<<C>> >>C<< 17. DRIVE SHAFT <LH>
18. CIRCLIP
<<C>> >>C<< 19. DRIVE SHAFT AND INNER SHAFT ASSEMBLY <RH>
20. TRANSMISSION FLUID COOLER LINE HOSE ASSEMBLY C
21. TRANSMISSION FLUID COOLER LINE HOSE ASSEMBLY B
22. TRANSAXLE ASSEMBLY UPPER PART COUPLING BOLTS

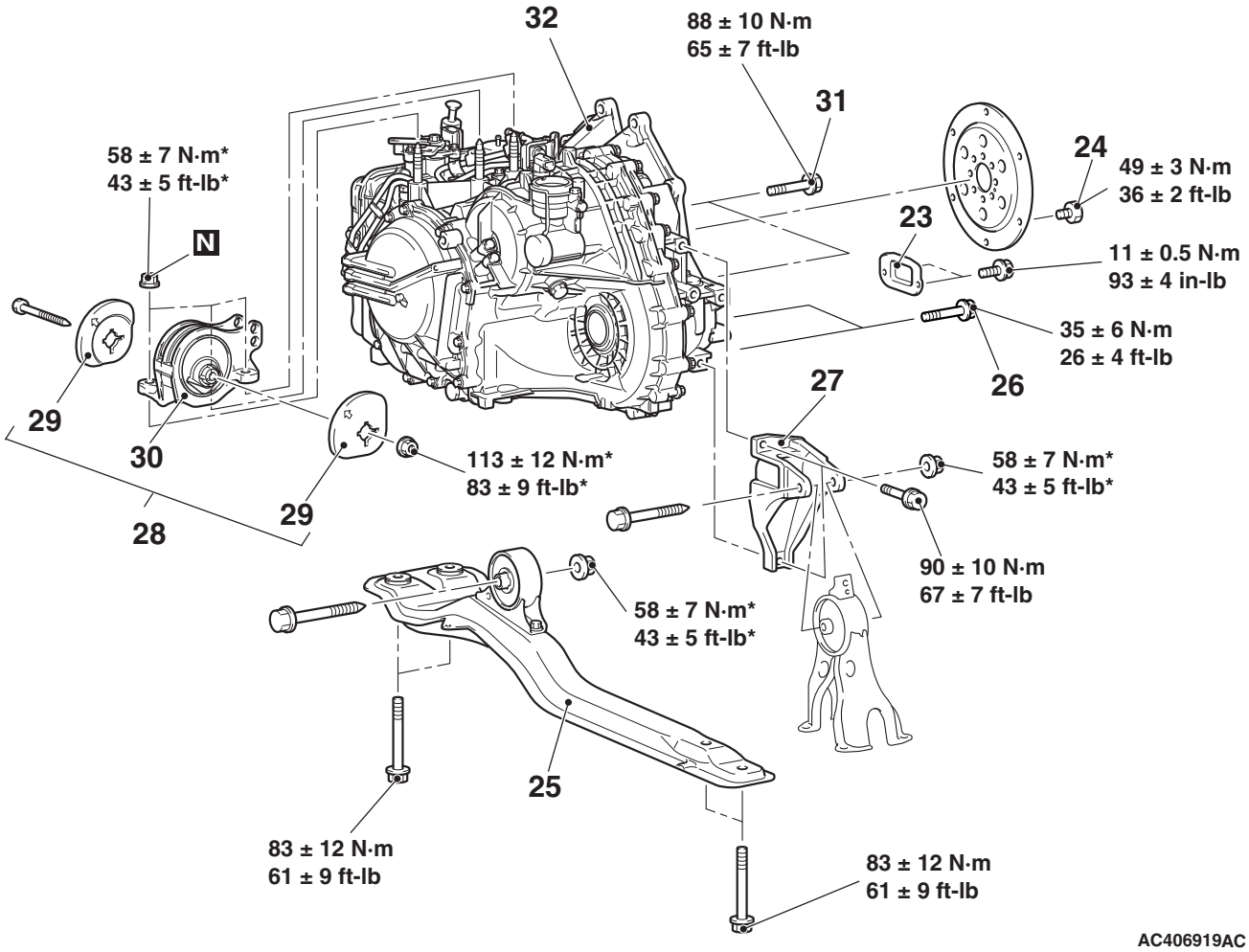

REMOVAL STEPS

23. COVER
<<D>> 24. TORQUE CONVERTER AND DRIVE PLATE BOLTS
25. CENTERMEMBER ASSEMBLY
26. ENGINE OIL PAN AND TRANSAXLE COUPLING BOLTS
27. REAR ROLL STOPPER BRACKET
- AIR CLEANER BRACKET

28. TRANSAXLE MOUNTING BRACKET ASSEMBLY
>>B<< 29. TRANSAXLE MOUNTING STOPPER

REMOVAL STEPS (Continued)

30. TRANSAXLE MOUNTING BODY SIDE BRACKET
<<E>>
- ENGINE ASSEMBLY SUPPORTING
- LIFTING UP OF THE VEHICLE
- SUPPORT THE TRANSAXLE WITH A TRANSAXLE JACK

31. TRANSAXLE ASSEMBLY LOWER PART COUPLING BOLTS
>>A<< 32. TRANSAXLE ASSEMBLY

Required Special Tools:

- MB990242: Puller Shaft Puller
- MB990244: Puller Bar
- MB990767: End Yoke Holder
- MB990998: Front Hub Remover and Installer
- MB991000: Spacer
- MB991354: Puller Body
- MB991454: Engine Hanger Balancer
- MB991895: Engine Hanger
- MB991897: Ball Joint Remover
- MB991928: Engine Hanger
- MB991929: Joint (50)
- MB991931: Joint (140)
- MB991932: Foot (standard)
- MB991934: Chain and Hook Assembly
- MB992012: Engine hanger plate A
- MB992013: Engine hanger plate B

TSB Revision

REMOVAL SERVICE POINTS

<<A>> DRIVE SHAFT NUT REMOVAL

⚠ CAUTION

Do not apply pressure to the wheel bearing by the vehicle weight to avoid possible damage when the drive shaft nut is loosened.

Use special tool MB990767 to fix the hub and remove the drive shaft nut.

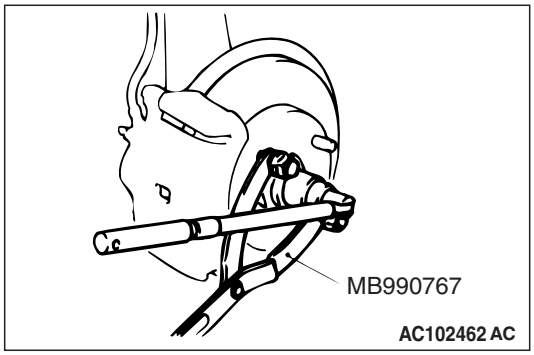

<<B>> TIE ROD END CONNECTION/LOWER ARM BALL JOINT CONNECTION REMOVAL

⚠ CAUTION

- **Do not remove the nut from ball joint. Loosen it and use the special tool to avoid possible damage to ball joint threads.**
- **Hang the special tool with cord to prevent it from falling.**

1. Replace the self locking nut with a regular nut, because the original one is a little bit large to install the special tool. Install special tool MB991897 as shown in the figure.

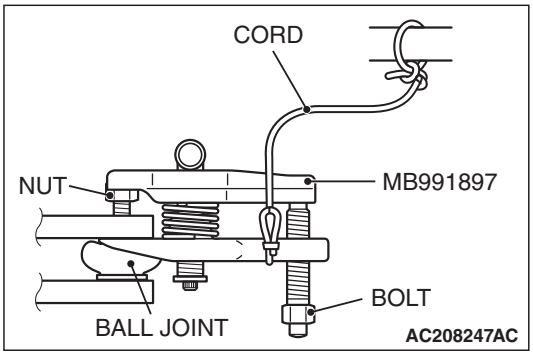

2. Turn the bolt and knob as necessary to make the jaws of special tool MB991897 parallel, tighten the bolt by hand and confirm that the jaws are still parallel.

   NOTE: When adjusting the jaws in parallel, make sure the knob is in the position shown in the figure.

3. Tighten the bolt with a wrench to disconnect the tie rod end and remove the self locking nut.

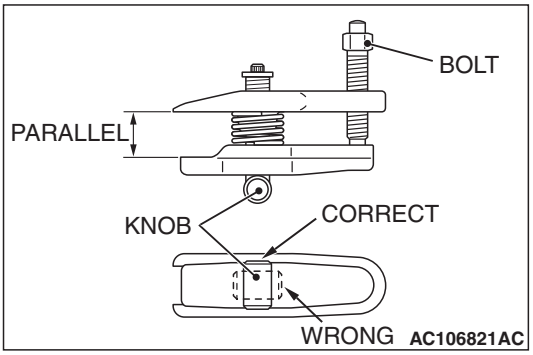

<<C>> DRIVE SHAFT <LH>/DRIVE SHAFT AND INNER SHAFT ASSEMBLY <RH> REMOVAL

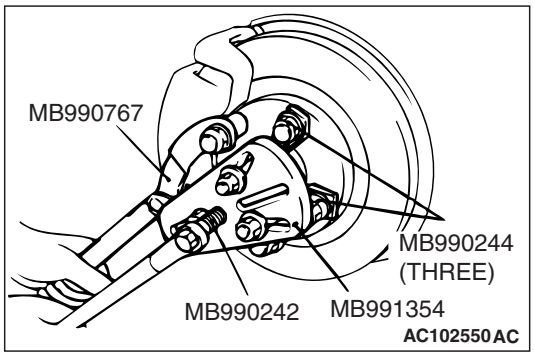

1. Use special tools MB990242, MB990244, MB991354 and MB990767 to push out the drive shaft or the drive shaft and inner shaft assembly from the hub.

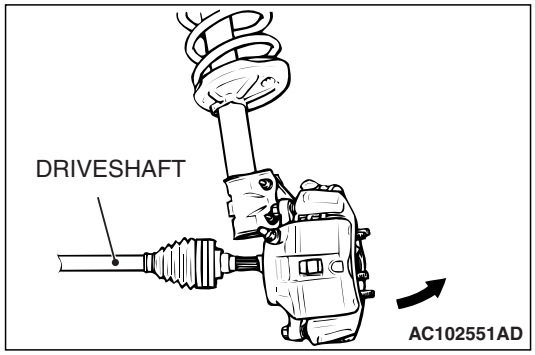

2. Remove the drive shaft from the hub by pulling the bottom of the brake disc towards you.

⚠ CAUTION

- **Do not pull on the drive shaft; doing so will damage the PTJ; be sure to use the pry bar.**
- **When pulling the drive shaft out from the transaxle, be careful that the spline part of the drive shaft does not damage the oil seal.**

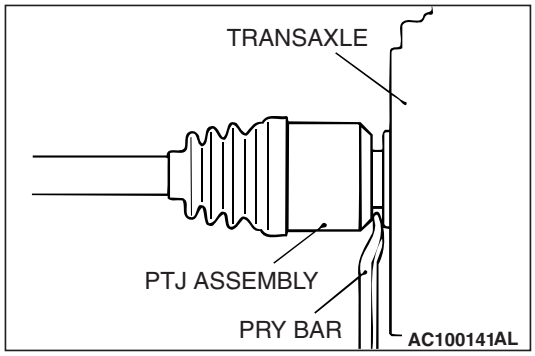

3. Insert a pry bar between the transaxle case and the drive shaft, and then pry and remove the drive shaft from the transaxle.

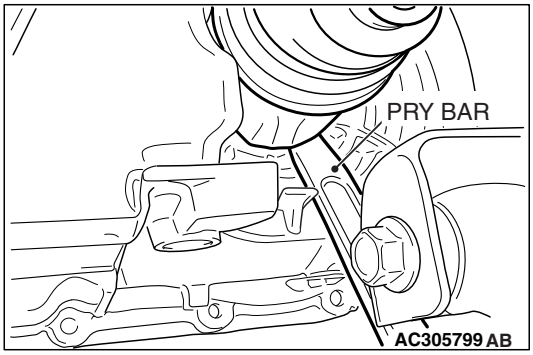

NOTE: Insert a pry bar, taking care not to damage the protrusion of transaxle case when removing the drive shaft LH.

4. If the inner shaft is hard to remove from the transaxle, strike the bracket assembly lightly with a plastic hammer and remove the inner shaft.

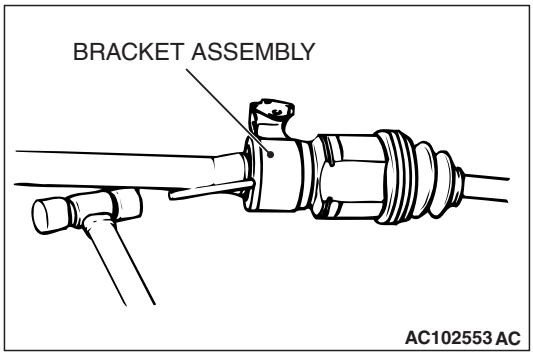

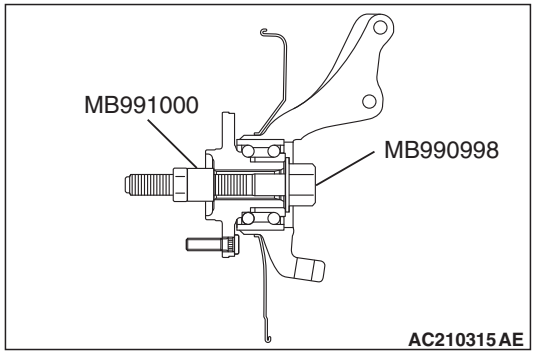

⚠ CAUTION

Do not apply pressure to the wheel bearing by the vehicle weight to avoid possible damage when the drive shaft is removed. If, however, vehicle weight must be applied to the bearing to move the vehicle, temporarily secure the wheel bearing by using special tools MB991000 and MB990998.

<<D>> TORQUE CONVERTER AND DRIVE PLATE COUPLING BOLTS REMOVAL

1. Remove the drive plate coupling bolts while turning the crankshaft.
2. Pry the torque converter towards the transaxle side. Remove the torque converter with the transaxle.

<<E>> ENGINE ASSEMBLY SUPPORTING

1. Remove the engine hanger.

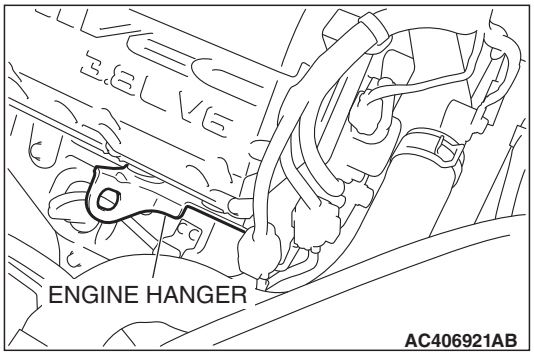

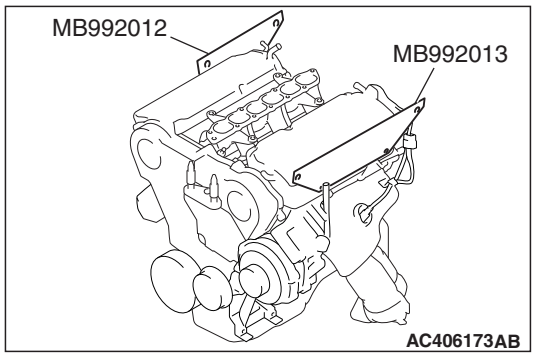

2. After removing the intake manifold plenum stay (rear) and the engine hanger, set special tool MB992012 and MB992013 to each cylinder head.

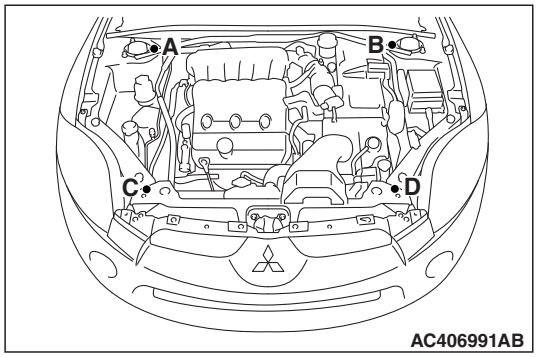

3. <If engine hanger MB991895 is used>
   (1) Set special tool MB991895 to the front fender mounting bolts (A and B) and the radiator support upper insulator mounting bolts (C and D), which are located in the engine compartment, as shown.

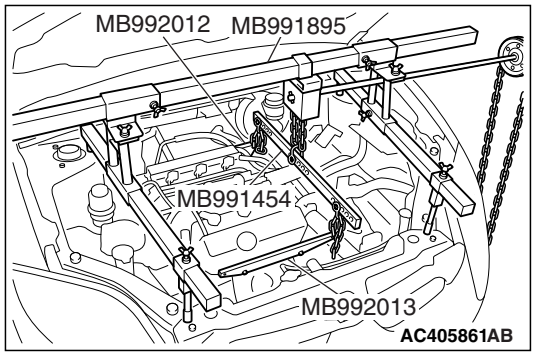

   (2) Set special tool MB991454 to hold the engine/transaxle assembly.

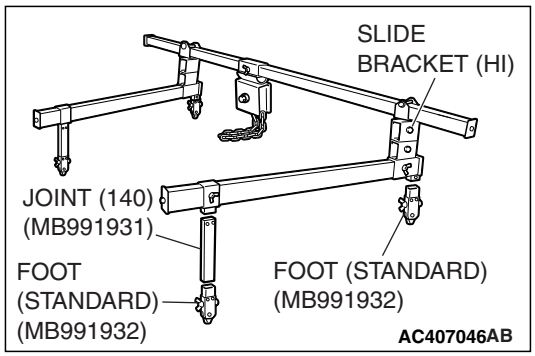

4. <If engine hanger MB991928 is used>
   (1) Assemble the engine hanger (special tool MB991928). Set the following parts to the base hanger.
   - Slide bracket (HI)
   - Foot (standard) (MB991932)
   - Joint (140) (MB991931)

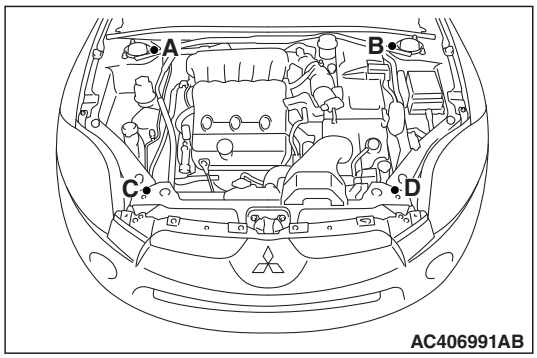

(2) Set the engine hanger (special tool MB991928) to the front fender mounting bolts (A and B) and the radiator support upper insulator mounting bolts (C and D), which are located in the engine compartment, as shown.

NOTE: Adjust the engine hanger balance by sliding the slide bracket (HI).

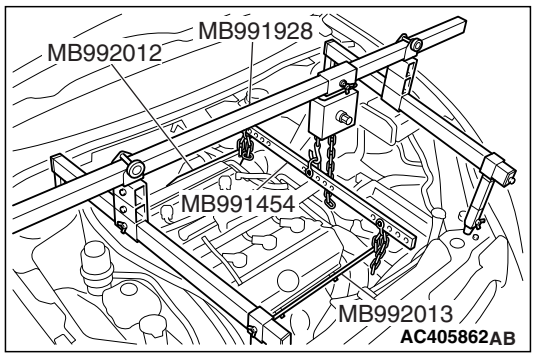

(3) Set special tool MB991454 to hold the engine/transaxle assembly.

INSTALLATION SERVICE POINT

>>A<< TRANSAXLE ASSEMBLY INSTALLATION

Engage the torque converter into the transaxle side securely, and then assemble the transmission assembly on the engine.

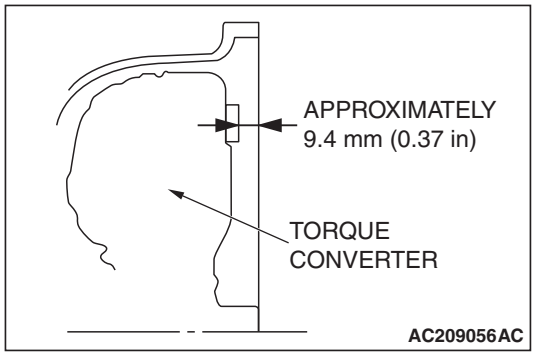

>>B<< TRANSAXLE MOUNTING STOPPER INSTALLATION

Install the transaxle mounting stopper so that its arrow points upward.

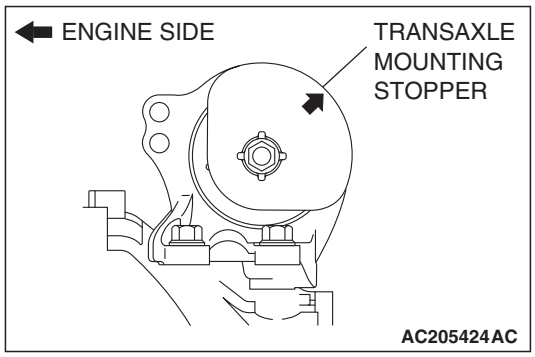

>>C<< DRIVE SHAFT AND INNER SHAFT ASSEMBLY <RH>/DRIVE SHAFT <LH> INSTALLATION

⚠ CAUTION

When installing the drive shaft or the drive shaft and inner shaft assembly, be careful that the spline part of the drive shaft or the drive shaft and inner shaft assembly do not damage the oil seal.

>>D<< DRIVE SHAFT NUT INSTALLATION

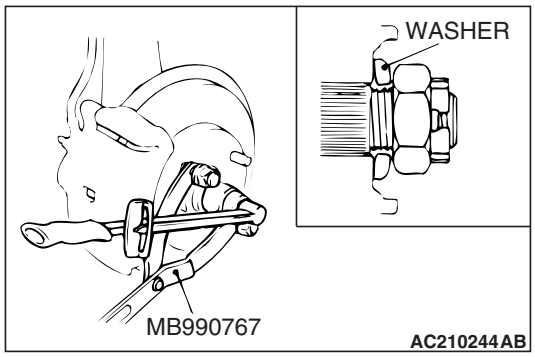

1. Be sure to install the drive shaft washer in the specified direction.

⚠ CAUTION

Before securely tightening the drive shaft nuts, make sure there is no load on the wheel bearings. Otherwise the wheel bearing will be damaged.

2. Using special tool MB990767, tighten the drive shaft nut to the specified torque.

   Tightening torque: 226 ± 29 N·m (167 ± 21 ft-lb)

>>E<< TRANSAXLE CONTROL CABLE/ADJUSTING NUT INSTALLATION

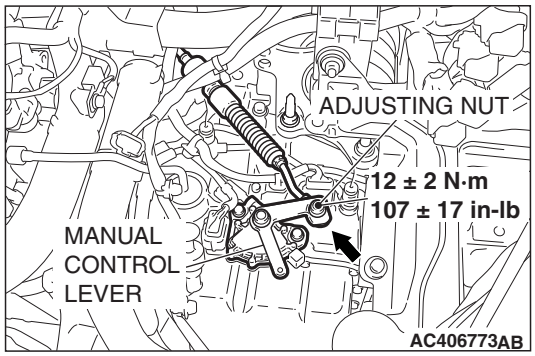

1. Place the selector lever and manual control lever in the “N” position.
2. Place the cable stud into the manual control lever slot and install the nut loosely. Gently push the transaxle control cable into the manual control lever slot until the cable is taut. Tighten the nut to the specified torque.

   Tightening torque: 12 ± 2 N·m (107 ± 17 in-lb)

TRANSMISSION FLUID COOLER, HOSE AND PIPE

REMOVAL AND INSTALLATION

M1231021900107

<4A/T>

Pre-removal and Post-installation Operation
- Engine Coolant Draining and Supplying (Refer to GROUP 00 – Maintenance Service P.00-68.)
- Transmission Fluid Draining and Supplying (Refer to GROUP 00, Maintenance Service – Automatic Transmission Fluid P.00-65.)
- Air Cleaner Intake Duct Removal and Installation (Refer to GROUP 15, Air Cleaner P.15-4.)

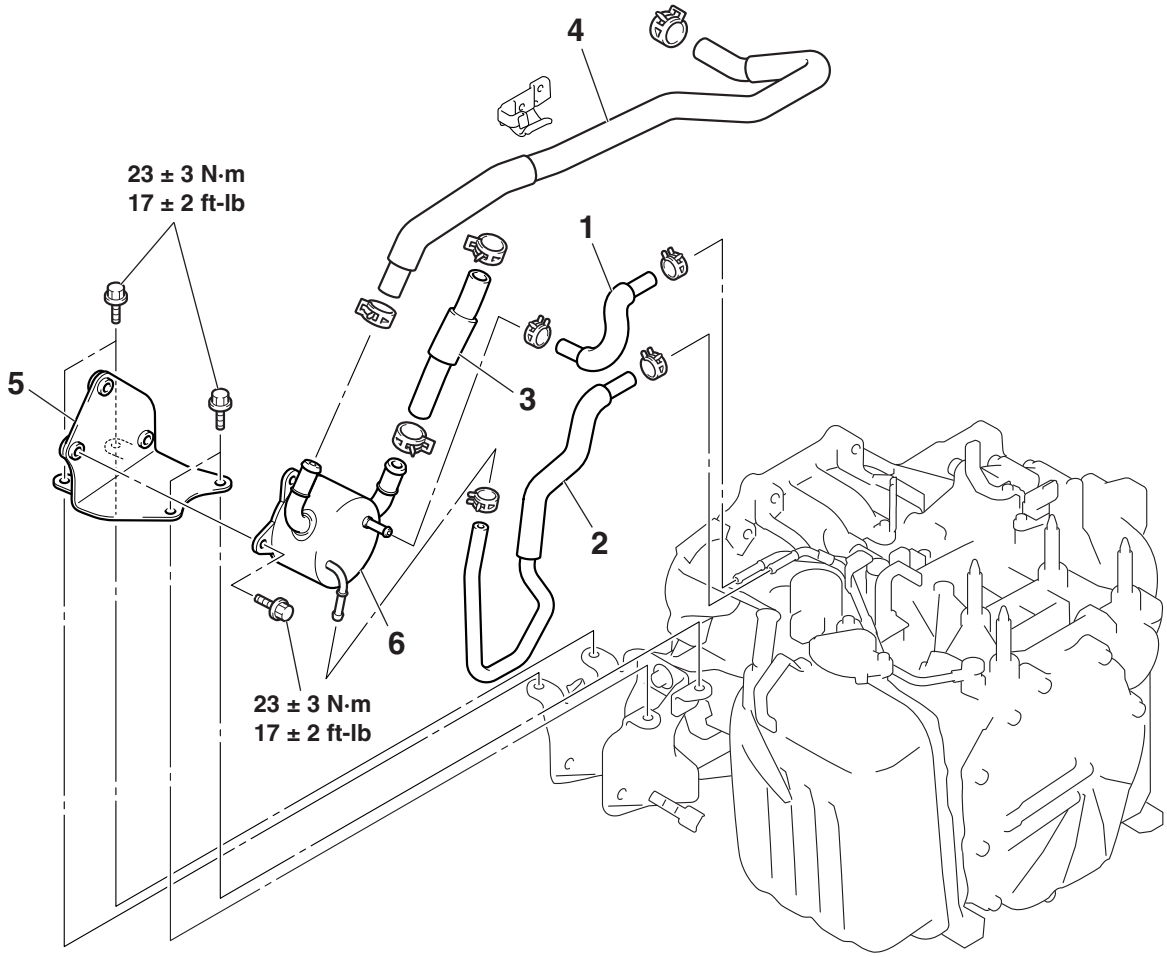

AC306185AB

REMOVAL STEPS

<<A>> 1. TRANSMISSION FLUID COOLER RETURN HOSE
<<A>> 2. TRANSMISSION FLUID COOLER FEED HOSE
<<A>> 3. WATER COOLER FEED HOSE
<<A>> 4. WATER COOLER RETURN HOSE

REMOVAL STEPS (Continued)

- ATF WARMER (TRANSMISSION FLUID COOLER) AND ATF WARMER (TRANSMISSION FLUID COOLER) BRACKET
5. ATF WARMER (TRANSMISSION FLUID COOLER) BRACKET
<<A>> 6. ATF WARMER (TRANSMISSION FLUID COOLER)

TSB Revision

REMOVAL SERVICE POINTS

<<A>> TRANSMISSION FLUID COOLER RETURN HOSE/TRANSMISSION FLUID COOLER FEED HOSE/WATER COOLER FEED HOSE/WATER COOLER RETURN HOSE/ATF WARMER (TRANSMISSION FLUID COOLER) REMOVAL

Drain the transmission fluid and engine coolant, which still remained in the hoses and the ATF warmer (transmission fluid cooler).

REMOVAL AND INSTALLATION

M1231021900118

<5A/T>

Pre-removal and Post-installation Operation
- Engine Room Under Cover LH (Refer to GROUP 51, Front Bumper Assembly and Radiator Grille P.51-2.)
- Side Under Cover LH (Refer to GROUP 51, Under Cover P.51-8.)
- Transmission Fluid Draining and Supplying (Refer to GROUP 00, Maintenance Service – Automatic Transmission Fluid P.00-65.)
- Air Cleaner Intake Duct Removal and Installation (Refer to GROUP 15, Air Cleaner P.15-5.)

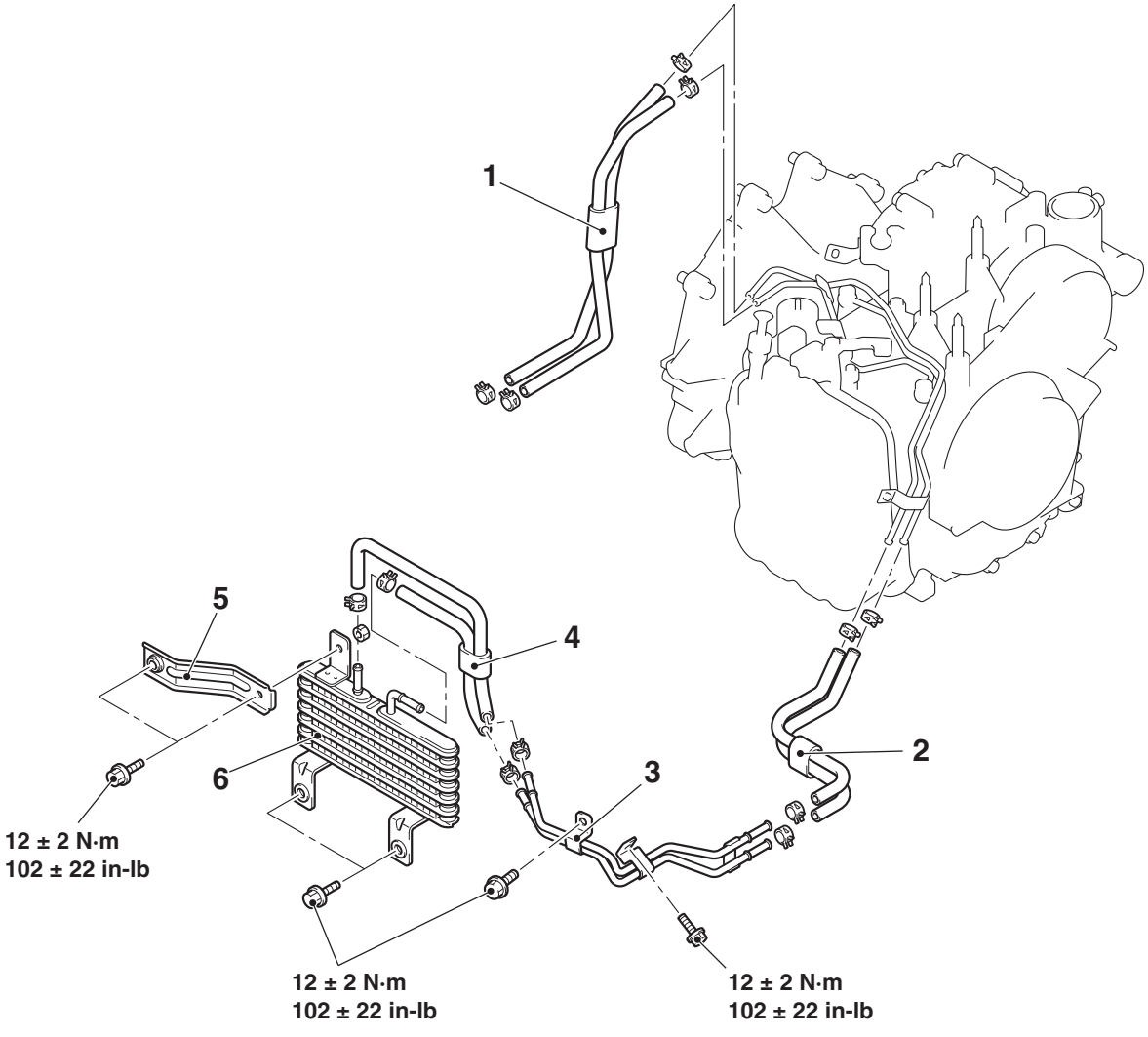

REMOVAL STEPS

<<A>> 1. TRANSMISSION FLUID COOLER LINE HOSE ASSEMBLY C

<<A>> 2. TRANSMISSION FLUID COOLER LINE HOSE ASSEMBLY B
- FRONT BUMPER ASSEMBLY (REFER TO GROUP 51, FRONT BUMPER ASSEMBLY AND RADIATOR GRILLE P.51-2)

REMOVAL STEPS (Continued)

<<A>> 3. TRANSMISSION FLUID COOLER LINE TUBE

<<A>> 4. TRANSMISSION FLUID COOLER LINE HOSE ASSEMBLY A

5. TRANSMISSION FLUID COOLER BRACKET

TSB Revision

REMOVAL STEPS (Continued)

- POWER STEERING COOLER TUBE ASSEMBLY (REFER TO GROUP 37, POWER STEERING P.37-58)
- AIR GUIDE PANEL CENTER (REFER TO GROUP 42, LOOSE PANEL P.42-302)

<<**A**>> 6. TRANSMISSION FLUID COOLER

REMOVAL SERVICE POINTS

<<A>> TRANSMISSION FLUID COOLER LINE HOSE A, B, C/TRANSMISSION FLUID COOLER LINE TUBE/TRANSMISSION FLUID COOLER REMOVAL

Drain the transmission fluid and engine coolant, which still remain in the hoses and the transmission fluid cooler.

SPECIFICATIONS

FASTENER TIGHTENING SPECIFICATIONS

M1231012400320

ITEM	SPECIFICATION
Transmission fluid drain plug	32 ± 2 N·m (23 ± 2 ft-lb)
Transmission range switch	
Transmission range switch body mounting bolt	11 ± 1 N·m (96 ± 8 in-lb)
Transaxle control	
Adjusting nut	12 ± 2 N·m (107 ± 17 in-lb)
Selector lever assembly attaching bolt	12 ± 2 N·m (102 ± 22 in-lb)
Shift lock cable unit fixing bolt	5.0 ± 1.0 N·m (44 ± 9 in-lb)
Transaxle control cable attaching bolt	12 ± 2 N·m (102 ± 22 in-lb)
A/T key interlock and shift lock mechanisms	
Shift lock cable unit fixing bolt	5.0 ± 1.0 N·m (44 ± 9 in-lb)
Transaxle assembly <4A/T>	
Adjusting nut	12 ± 2 N·m (107 ± 17 in-lb)
ATF warmer (transmission fluid cooler) bracket attaching bolt	23 ± 3 N·m (17 ± 2 ft-lb)
Bell housing cover attaching bolt (engine side)	9.0 ± 1.0 N·m (80 ± 9 in-lb)
Bell housing cover attaching bolt (transaxle side)	26 ± 5 N·m (19 ± 4 ft-lb)
Center member attaching bolt	83 ± 12 N·m (61 ± 9 ft-lb)
Drive plate bolt	49 ± 3 N·m (36 ± 2 ft-lb)
Drive shaft nut	226 ± 29 N·m (167 ± 21 ft-lb)
Front roll stopper bracket retainer nut	58 ± 7 N·m (43 ± 5 ft-lb)
Rear roll stopper bracket attaching bolt	90 ± 10 N·m (67 ± 7 ft-lb)
Rear roll stopper bracket retainer nut	58 ± 7 N·m (43 ± 5 ft-lb)
Self-locking nut (lower arm ball joint connection)	65 ± 6 N·m (48 ± 4 ft-lb)
Self-locking nut (tie rod end connection)	29 ± 4 N·m (21 ± 3 ft-lb)
Stabilizer link to strut connecting nut	48 ± 7 N·m (36 ± 5 ft-lb)
Starter motor attaching bolt	30 ± 3 N·m (23 ± 2 ft-lb)
Transaxle assembly upper part coupling bolt	48 ± 6 N·m (36 ± 4 ft-lb)
Transaxle assembly lower part coupling bolt	48 ± 6 N·m (36 ± 4 ft-lb)
Transaxle mounting body side bracket attaching nut	58 ± 7 N·m (43 ± 5 ft-lb)
Transaxle mounting stopper attaching nut	113 ± 12 N·m (83 ± 9 ft-lb)
Transaxle assembly <5A/T>	
Adjusting nut	12 ± 2 N·m (107 ± 17 in-lb)
Center member attaching bolt	83 ± 12 N·m (61 ± 9 ft-lb)
Cover attaching bolt	11 ± 0.5 N·m (93 ± 4 in-lb)
Drive shaft and inner shaft assembly bolt (RH)	41± 4 N·m (30 ± 3 ft-lb)
Drive shaft nut	226 ± 29 N·m (167 ± 21 ft-lb)
Engine oil pan and transaxle coupling bolt	35 ± 6 N·m (26 ± 4 ft-lb)
Front roll stopper bracket retainer nut	58 ± 7 N·m (43 ± 5 ft-lb)
Rear roll stopper bracket attaching bolt	90 ± 10 N·m (67 ± 7 ft-lb)

ITEM	SPECIFICATION
Rear roll stopper bracket retainer nut	58 ± 7 N·m (43 ± 5 ft-lb)
Self-locking nut (lower arm ball joint connection)	65 ± 6 N·m (48 ± 4 ft-lb)
Self-locking nut (tie rod end connection)	29 ± 4 N·m (21 ± 3 ft-lb)
Stabilizer link to strut connecting nut	48 ± 7 N·m (36 ± 5 ft-lb)
Torque converter and drive plate bolt	49 ± 3 N·m (36 ± 2 ft-lb)
Transaxle assembly upper part coupling bolt	73 ± 10 N·m (54 ± 7 ft-lb)
Transaxle assembly lower part coupling bolt	88 ± 10 N·m (65 ± 7 ft-lb)
Transaxle mounting body body bracket attaching nut	58 ± 7 N·m (43 ± 5 ft-lb)
Transaxle mounting stopper attaching nut	113 ± 12 N·m (83 ± 9 ft-lb)
Transmission Fluid Cooler <4A/T>	
ATF warmer (transmission fluid cooler) bracket attaching bolt	23 ± 3 N·m (17 ± 2 ft-lb)
ATF warmer (transmission fluid cooler) attaching bolt	23 ± 3 N·m (17 ± 2 ft-lb)
Transmission Fluid Cooler <5A/T>	
Transmission fluid cooler attaching bolt	12 ± 2 N·m (102 ± 22 in-lb)
Transmission fluid cooler bracket attaching bolt	12 ± 2 N·m (102 ± 22 in-lb)
Transmission fluid cooler line tube attaching bolt	12 ± 2 N·m (102 ± 22 in-lb)

SERVICE SPECIFICATIONS

M1231000300519

ITEM		STANDARD VALUE
Transmission fluid temperature sensor kΩ	at 0°C (32°F)	16.7 – 20.5
	at 20°C (68°F)	7.3 – 8.9
	at 40°C (104°F)	3.4 – 4.2
	at 60°C (140°F)	1.9 – 2.2
	at 80°C (176°F)	1.0 – 1.2
	at 100°C (212°F)	0.57 – 0.69
Line pressure MPa (psi)		0.98 – 1.05 (142 – 152)
Resistance of torque converter clutch control solenoid valve coil [at 20°C (68°F)] Ω		2.7 – 3.4
Resistance of low-reverse solenoid valve coil [at 20°C (68°F)] Ω		2.7 – 3.4
Resistance of overdrive solenoid valve coil [at 20°C (68°F)] Ω		2.7 – 3.4
Resistance of second solenoid valve coil [at 20°C (68°F)] Ω		2.7 – 3.4
Resistance of underdrive solenoid valve coil [at 20°C (68°F)] Ω		2.7 – 3.4
Resistance of reduction solenoid valve coil [at 20°C (68°F)] Ω <5A/T>		2.7 – 3.4
Stall speed r/min	4A/T	2,500 – 3,000
	5A/T	2,200 – 2,700

LUBRICANT

M1231000400550

ITEM		SPECIFIED LUBRICANT	QUANTITY
Transmission fluid dm^3 (qt)	4A/T	DIAMOND ATF SP III	7.7 (8.1)
	5A/T		8.4 (8.9)

NOTES