GROUP 54B

SMART WIRING SYSTEM (SWS) NOT USING SWS MONITOR <Except vehicles for Hong Kong and Singapore>

CONTENTS

GENERAL INFORMATION 54B-3

SPECIAL TOOLS. 54B-22

TROUBLESHOOTING 54B-24
- PRIOR TO TROUBLESHOOTING 54B-24
- STANDARD FLOW OF DIAGNOSTIC TROUBLESHOOTING 54B-24
- DIAGNOSTIC FUNCTION 54B-24

DIAGNOSIS CODE CHART. 54B-26

DIAGNOSTIC TROUBLE CODE PROCEDURES 54B-27

TROUBLE SYMPTOM CHART 54B-58

CHECK TROUBLE BY USING THE INPUT SIGNAL CHECK 54B-63

OPERATION AND FUNCTION QUICK-REFERENCE TABLE FOR INPUT SIGNAL INSPECTION PROCEDURES 54B-65

Continued on next page

Main Index
Group TOC

SYMPTOM PROCEDURES 54B-67
BUZZER 54B-76
CENTRAL DOOR LOCKING SYSTEM. . . . 54B-87
POWER WINDOW 54B-111
KEYLESS ENTRY SYSTEM. 54B-148
SUNROOF 54B-154
WINDSHIELD WIPER AND WASHER 54B-178
REAR WIPER AND WASHER 54B-198
ELECTRIC RETRACTABLE REMOTE CONTROLLED DOOR MIRROR 54B-213
IGNITION KEY CYLINDER ILLUMINATION LAMP. 54B-226
SEAT BELT WARNING LAMP 54B-229
HEADLAMP AND TAIL LAMP. 54B-233
FLASHER TIMER 54B-254
FOG LAMP 54B-274
INTERIOR LAMP. 54B-282

INPUT SIGNAL PROCEDURES. 54B-319

CHECK AT ECU TERMINAL 54B-410

Main Index
Group TOC

GENERAL INFORMATION

M1549000100975

The exclusive signal lines for transmitting the multi-distribution data are connected as follows between the ETACS-ECU, column switch (incorporated inside the column-ECU), front-ECU and sunroof motor assembly for internal communication.

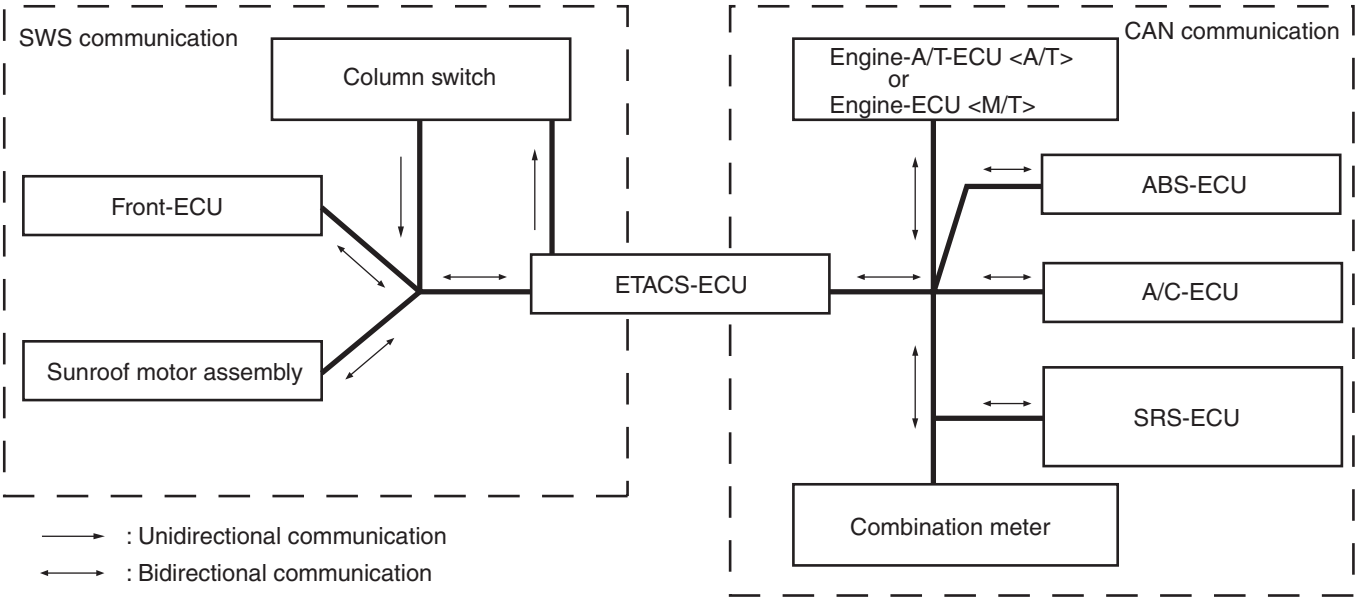

AC503781AB

BUZZER

IGNITION KEY REMINDER BUZZER FUNCTION <VEHICLES FOR GCC>

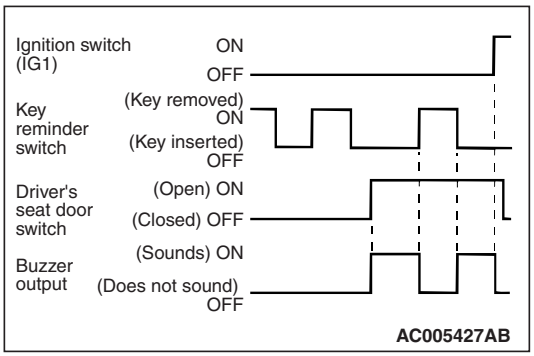

AC005427AB

When the driver’s door is opened with the ignition key inserted in the ignition key cylinder (ignition switch is in the OFF position,) the buzzer sounds intermittently to indicate that the ignition key has not been removed.

LAMP REMINDER BUZZER FUNCTION

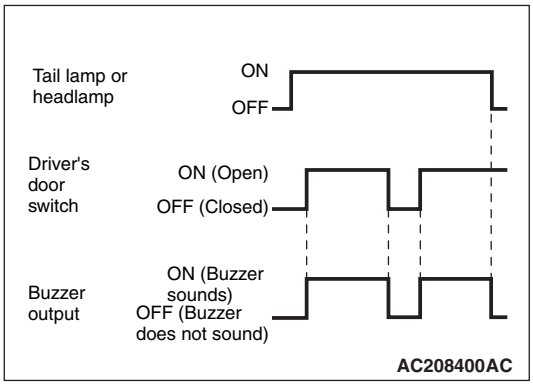

AC208400AC

When the ignition key is removed and then the driver's door is opened with turning ON the tail lamp or the head lamp, the buzzer sounds continuously to alert the driver that the lamp is still ON.
However, if the tail lamp or the headlamp is turned off by the headlamp automatic-shutdown function, the buzzer does not sound.

SPEED WARNING BUZZER FUNCTION <VEHICLES FOR GCC>

If the vehicle speed exceeds 120 km/h, the buzzer sounds intermittently to warn the driver that the speed is too high.

Main Index
Group TOC

SEAT BELT WARNING BUZZER FUNCTION <VEHICLES FOR GCC, AUSTRALIA AND NEW ZEALAND>

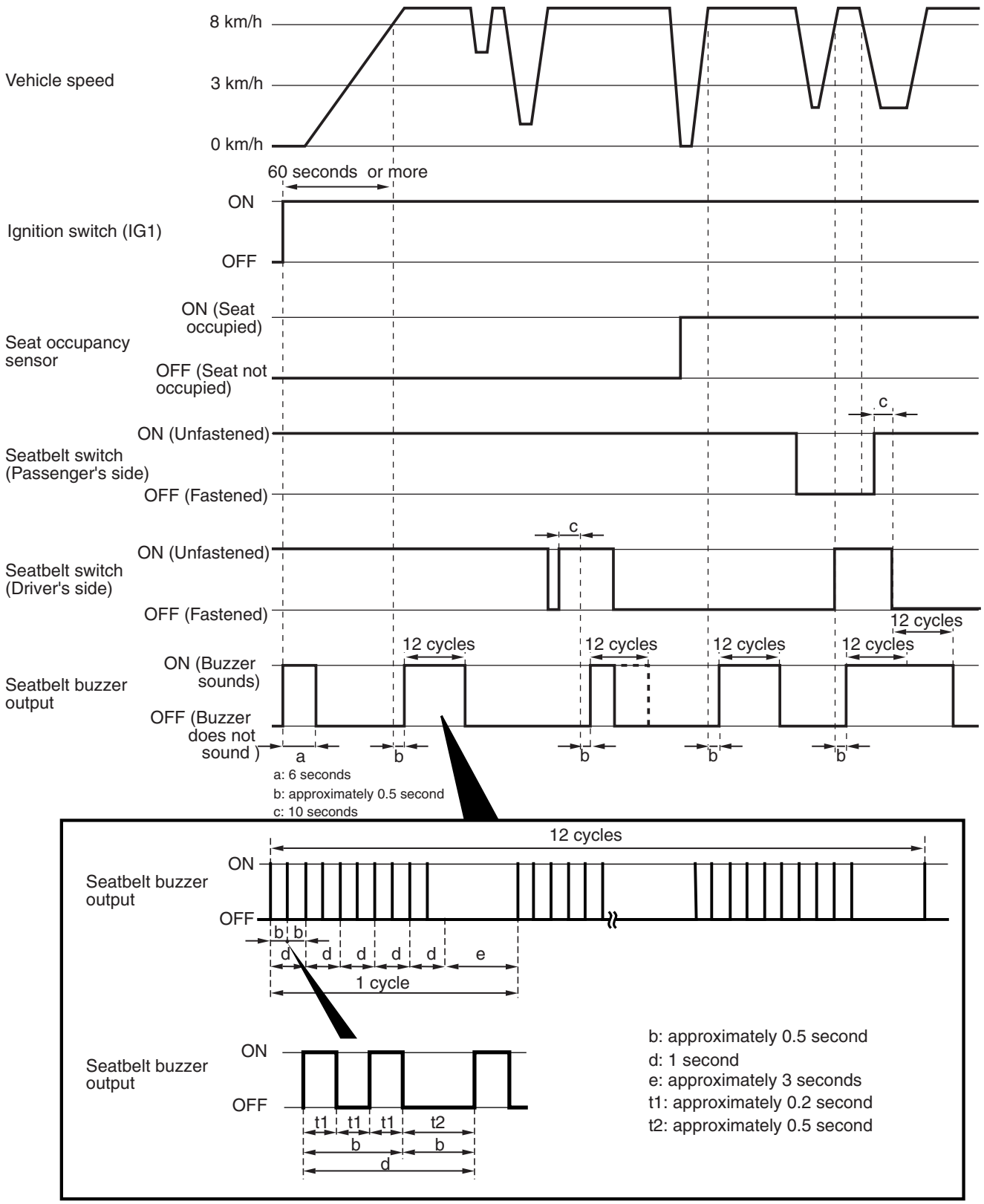

AC309952AB

When the ignition switch is turned ON with the driver's seat belt unbuckled, the ETACS-ECU triggers a warning buzzer (repetition of a short beep sound) for 6 seconds to notify the driver that the seat belt is not fastened.
When the ETACS-ECU detects that the vehicle speed signal sent from the combination meter through CAN communication exceeds 8 km/h and the driver's seat belt buckle is not engaged, it will trigger a warning buzzer (repetition of 5-seconds ON and 2.8-seconds OFF for 12 cycles). The ETACS-ECU stops the buzzer when the driver's seat belt buckle is engaged while the warning cycle is ON.
On vehicles except for Australia and New Zealand, the seat belt indicator function is only applied to the driver's seat belt.

DOOR-AJAR WARNING BUZZER FUNCTION (THE INITIAL CONDITION: WITH FUNCTION)

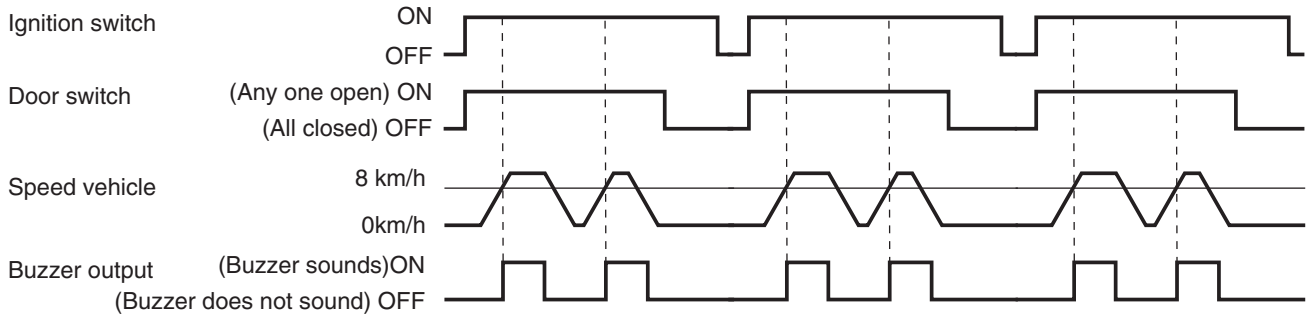

AC309677AB

If the vehicle speed exceeds 8 km/h with the door-ajar, the buzzer sounds (pings eight times) to alert the driver that the door is not properly closed.

NOTE: Availability of the door-ajar alarm function can be selected by the customize function.

Main Index
Group TOC

TURN-SIGNAL LAMP BUZZER FUNCTION (THE INITIAL CONDITION: WITHOUT FUNCTION)

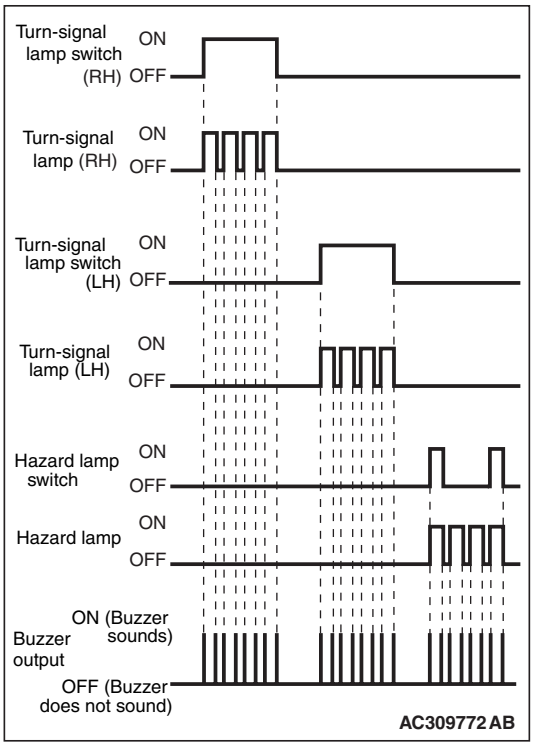

ETACS-ECU buzzer sounds simultaneously with the blinks of the turn-signal lamp and the hazard lamp.

NOTE: Availability of the turn-signal lamp operation tone function can be selected by the customize function.

REAR SUNROOF BUZZER FUNCTION

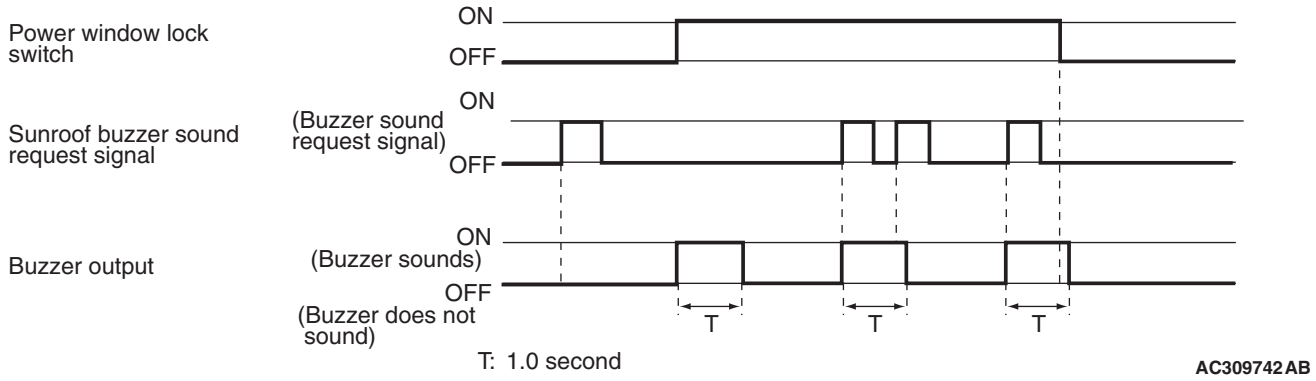

The ETACS-ECU triggers a warning buzzer when it receives a buzzer request signal from the sunroof-ECU. The buzzer keeps sounding for 1 full second if the trigger conditions are eliminated while the buzzer is ON.

CENTRAL DOOR LOCKING SYSTEM

CENTRAL DOOR LOCKING CONTROL FUNCTION

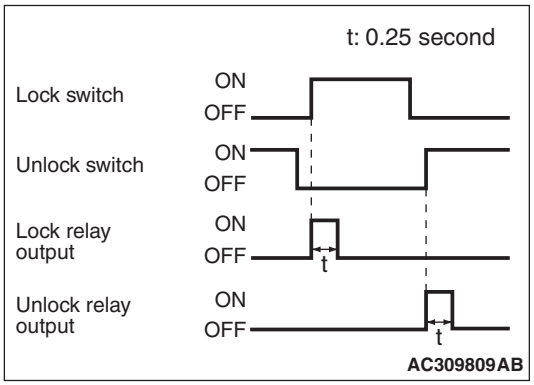

When the front doors are locked (when the lock switch turns ON after turning OFF the unlock switch in the driver's door lock actuator), ETACS-ECU turns ON the lock relay output for 0.25 second, and locks all doors (including the tailgate).
When the front doors is unlocked (when the unlock switch turns ON after turning OFF the lock switch on the driver's door lock actuator), ETACS-ECU turns ON the unlock relay output for 0.25 second, and unlocks all doors (including the tailgate).

KEY REMINDER FUNCTION <VEHICLES WITH KEYLESS ENTRY SYSTEM>

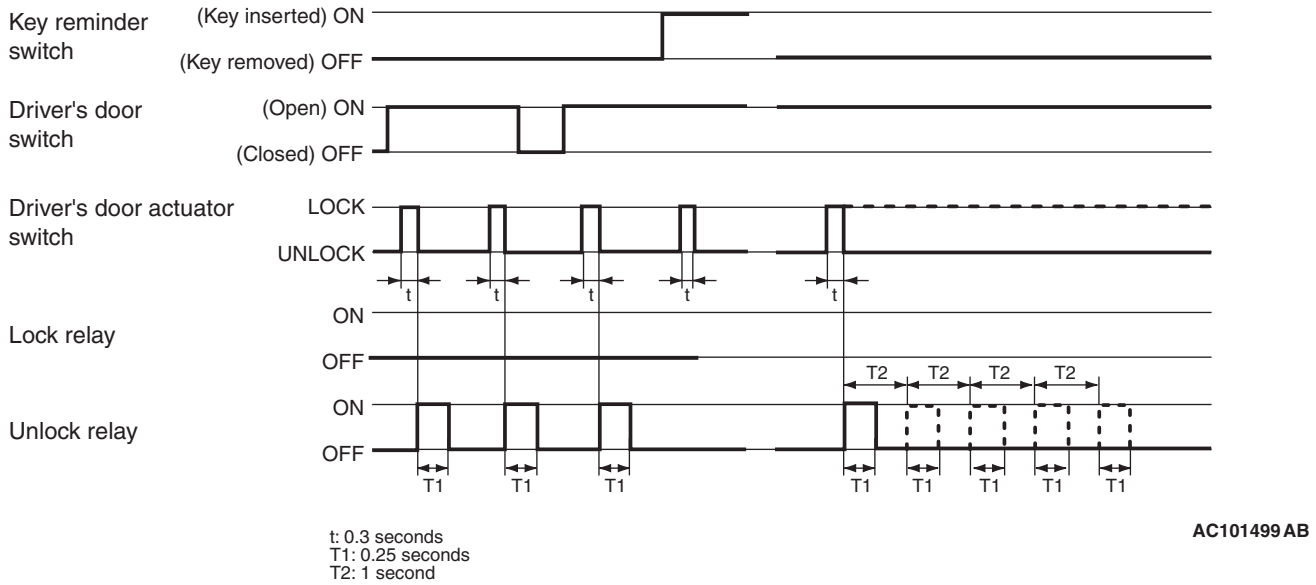

When the driver's door is opened with the ignition key inserted to the ignition cylinder and the door is locked (when the lock switch turns ON after turning OFF the unlock switch in the driver's door lock actuator), after approximately 0.3 second, ETACS-ECU turns ON the unlock relay output for 0.25 second to discourage the door lock operation so that the ignition key left in the ignition cylinder is prevented.

If the discouraging the door lock operation fails, the current supply will be retried (The unlock relay output is turned ON for 0.25 second up to five times with one second interval).

NOTE: The broken line in the graph indicates the current supply retry state if the discouraging door lock operation fails.

Main Index
Group TOC

TAILGATE OPENER CONTROL FUNCTION

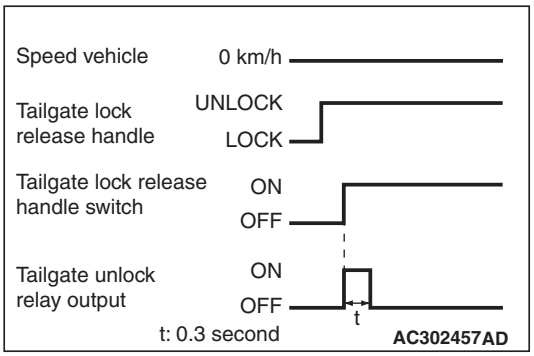

When the tailgate lock release handle is pulled up (tailgate lock release handle switch turns ON) while the vehicle is parked and the tailgate is unlocked, the ETACS-ECU turns ON the unlock relay output for 0.3 second, thus the tailgate can be opened by the tailgate lock release handle.

KEYLESS ENTRY SYSTEM

MULTI-MODE KEYLESS ENTRY SYSTEM

The power door mirrors can be operated by the keyless entry transmitter operation.

NOTE: Availability of the door mirrors operation can be adjusted with the customize function.

KEYLESS ENTRY HAZARD ANSWERBACK FUNCTION (INITIAL SETTING: LOCK, FLASH ONCE, UNLOCK, FLASH TWICE)

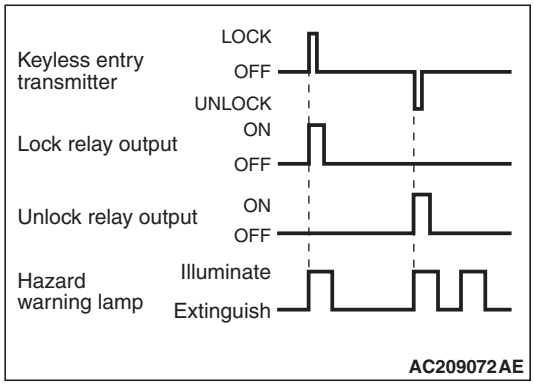

The hazard answer back function that allows checking the lock/unlock state of the door easily even in the daytime is installed. When the lock signal from the keyless entry transmitter is received into ETACS-ECU, all doors (including the tailgate) are LOCK, and the turn signal lamp blinks once. When the unlock signal is received, all doors (including the tailgate) are UNLOCK, and the turn-signal lamp blinks twice.

NOTE: The answer back blink time can be adjusted by the customize function.

ROOM LAMP ANSWERBACK FUNCTION (INITIAL SETTING: LOCK FLASH ONCE, UNLOCK ILLUMINATES FOR 15 SECONDS)

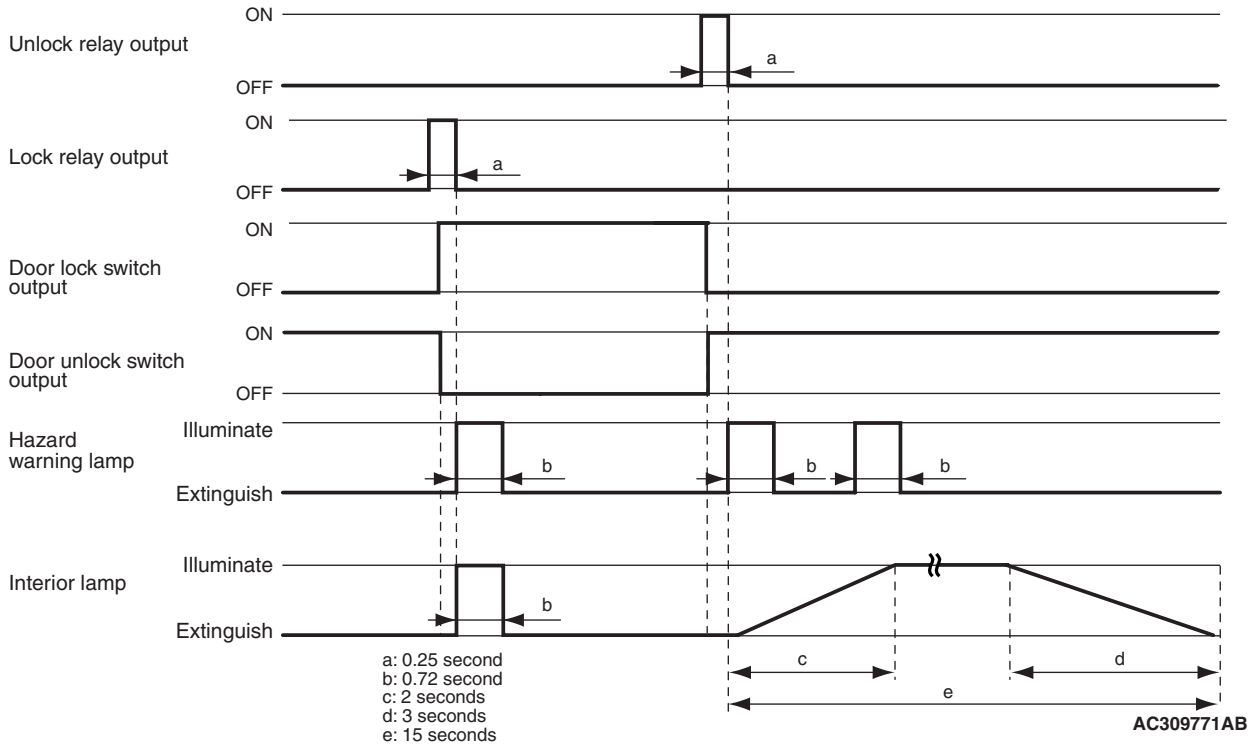

When the ETACS-ECU receives the lock signal from the keyless entry transmitter, all doors (including tailgate) is locked and the interior lamp flashes once in synchronization with the hazard lamp operation.
When the ETACS-ECU receives the unlock signal, all doors (including tailgate) is unlocked. The interior lamp fades in, keeps on, and fades out in 15 seconds after the door unlock relay is operated. (15 seconds including fading period)

NOTE: The answerback blink time can be adjusted by the customize function.

TIMER LOCK FUNCTION (THE INITIAL CONDITION: 30 SECONDS)

After unlocking the doors with the keyless entry transmitter, if no doors are opened and if the ignition key is not inserted or if the locking function is not operated, the ETACS-ECU automatically locks the doors in 30 seconds.

POWER WINDOW

POWER WINDOW TIMER FUNCTION <EXCEPT VEHICLES FOR AUSTRALIA AND NEW ZEALAND>

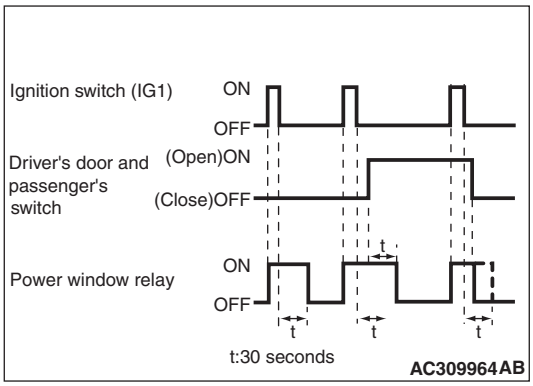

When the power window relay is turned ON with the ignition switch ON, the power window relay is kept ON for 30 seconds even after the ignition switch is turned OFF, enabling the door window to be opened and closed with the power window switch.
If the driver's door is opened during the timer operation, the power window relay is kept ON for 30 seconds from that time. However, when the driver's door is closed, the power window relay is turned OFF at the same time.

Main Index
Group TOC

POWER WINDOW TIMER FUNCTION <VEHICLES FOR AUSTRALIA AND NEW ZEALAND>

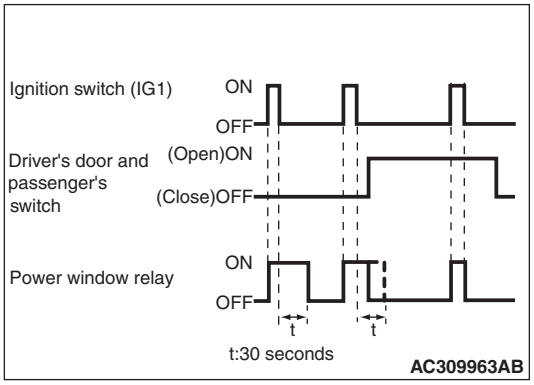

When the power window relay is turned ON with the ignition switch ON, the power window relay is kept ON for 30 seconds even after the ignition switch is turned OFF, enabling the door window to be opened and closed with the power window switch.
If the driver's or the front passenger door is opened during timer operation, the power window relay is turned OFF at the same time.

SUNROOF

SUNROOF TIMER FUNCTION

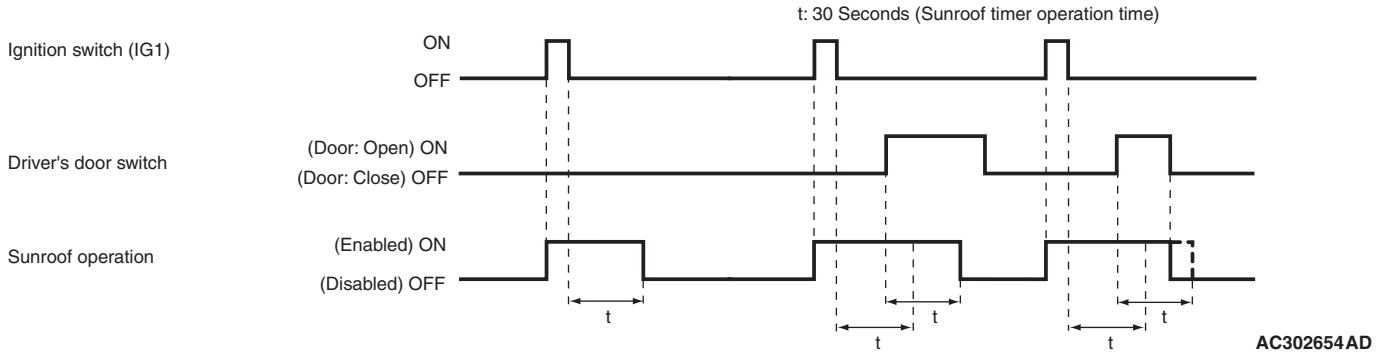

After turning OFF the ignition switch, the sunroof can be operated by the sunroof switch for approximately 30 seconds.
When the driver's door is opened during the sunroof timer operation, the sunroof timer operation will be extended for sunroof timer operation time at that time.

If the driver's door is closed during sunroof timer operation, the sunroof operation is cancelled at the same time.

NOTE: The sunroof timer operation time can be adjusted by the customize function.

Main Index
Group TOC

WINDSHIELD WIPER AND WASHER INTERMITTENT CONTROL <VEHICLE SPEED-DEPENDENT VARIABLE TYPE> (THE INITIAL CONDITION: WITH FUNCTION)

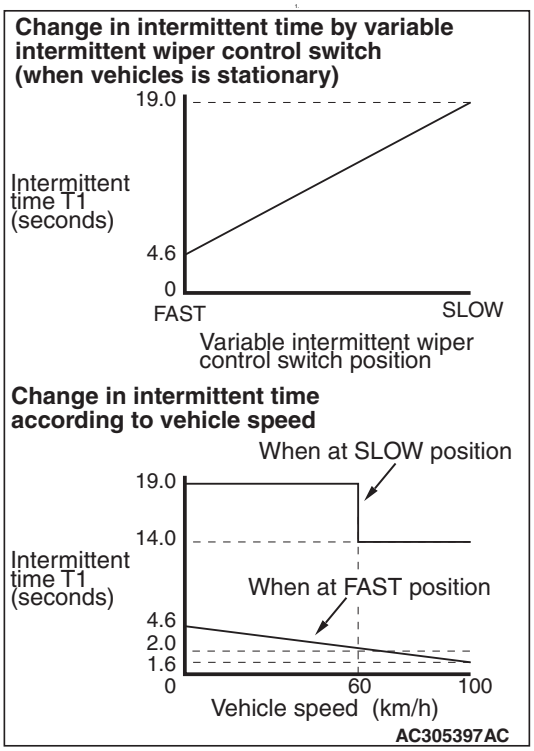

The ETACS-ECU calculates the intermittent time "T1" based on the position of the windshield intermittent wiper control on the column switch and the vehicle speed signal, which is transmitted from the combination meter to the ETACS-ECU through CAN communication, and constantly transmits it to the front ECU.

NOTE: Using a customisation function, driver can enable or disable the vehicle speed-sensitive function. For more information about the customisation feature.

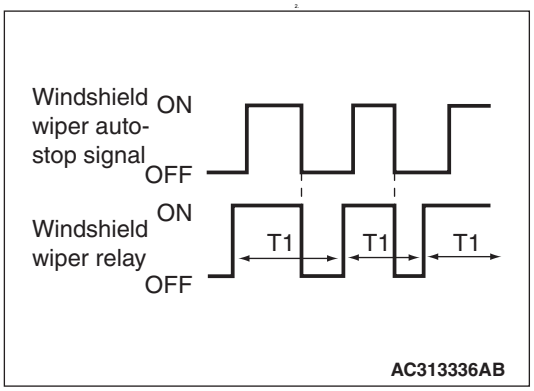

When the front ECU receives the windshield intermittent wiper switch ON signal from the column switch while the ignition switch is in the ACC or ON position, it turns the windshield wiper relay on to operate the windshield wiper at low speed.

3. When the windshield wiper comes to the stop position, the windshield wiper auto stop signal turns OFF. Then the windshield wiper relay will turn OFF, and the windshield wiper stops operating.
4. After the intermittent time (T1 second) sent from the ETACS-ECU has elapsed after the windshield wiper relay is turned ON, the windshield wiper relay turns ON again, and the above procedure is repeated.

NOTE: If the intermittent time "T1" is 2 seconds or longer, the front ECU operates the windshield wiper at low speed.

MIST WIPER CONTROL

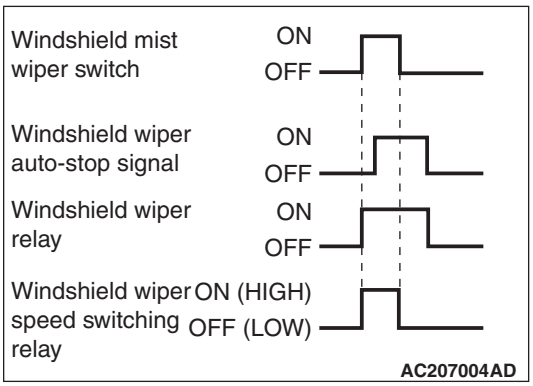

When the windshield wiper mist switch of the column switch is turned ON while the ignition switch is ACC or ON, the column switch turns ON the windshield wiper drive signal. At the same time, the wiper speed switch relay turns to ON (HI). When the windshield mist wiper switch is ON, the windshield wiper operates at the high speed. When the windshield mist wiper switch is turned OFF while the windshield wiper is operating in the mist mode, the windshield wiper operates at low speed and then stops at the auto stop position.

Main Index
Group TOC

LOW SPEED WIPER AND HIGH SPEED WIPER CONTROL

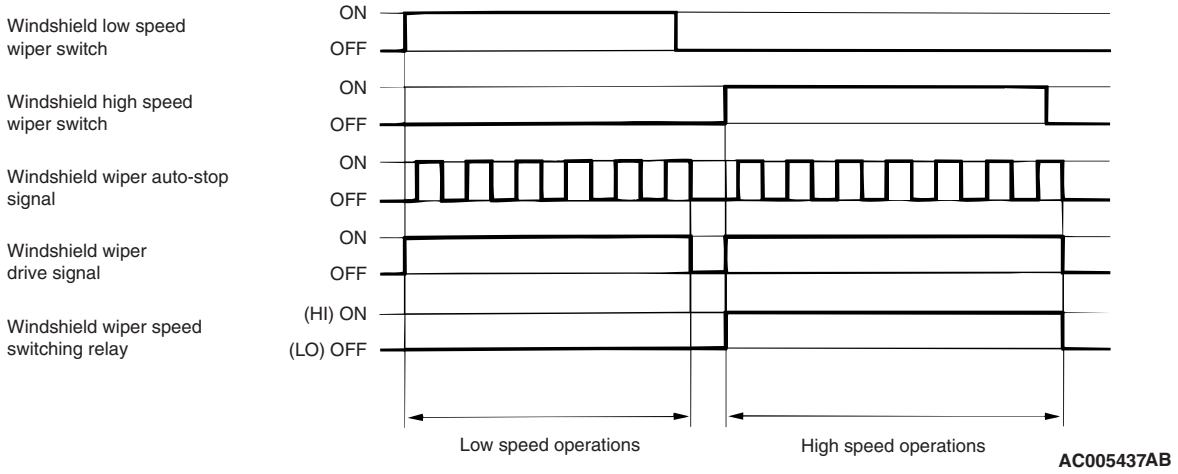

When the windshield low speed wiper switch of the column switch is turned ON while the ignition switch is ACC or ON, the column switch turns ON the windshield wiper drive signal. Also, the wiper speed switching relay turns to OFF (LO), and the windshield wiper operates at the low speed.

When the windshield high speed wiper switch is turned ON, the windshield wiper drive signal turns ON. Also, the wiper speed switching relay turns ON (HI), and the windshield wiper operates at the high speed.

WINDSHIELD WIPER LINKED WITH WASHER FUNCTION (THE INITIAL CONDITION: WITH FUNCTION)

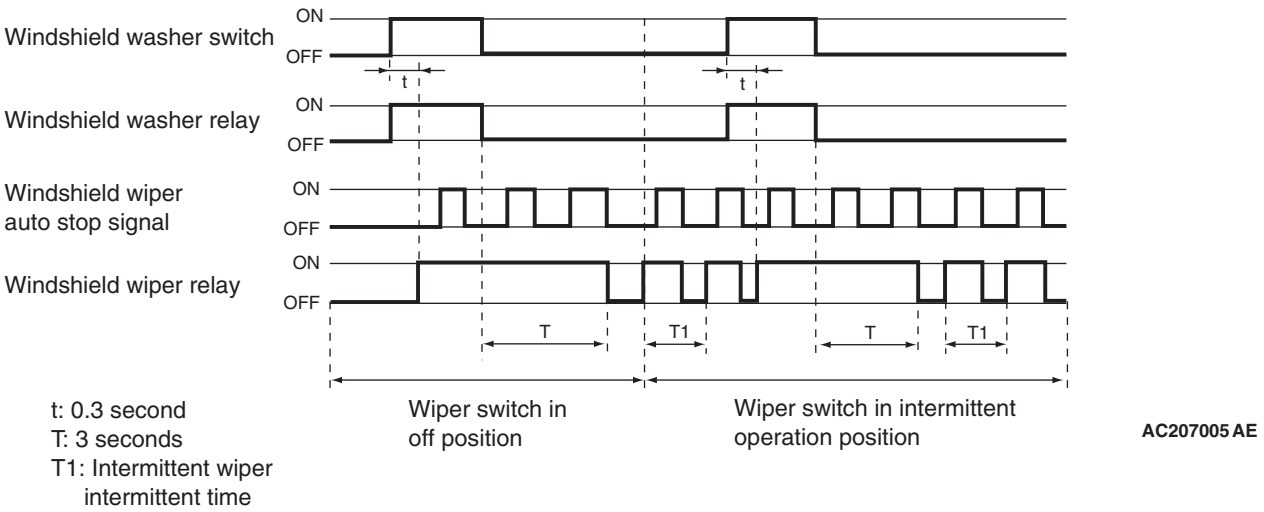

Wiper switch	OFF position				Intermittent operation position				Low-speed or high-speed operation position
Washer switch ON time	0.3 second or less	0.3 to 0.5 second	0.5 to 0.7 second	0.7 second or more	0.2 second or less	0.2 to 0.5 second	0.5 to 0.7 second	0.7 second or more	–
T1	0 second	1 second	2 seconds	3 seconds	0 second	1 second	2 seconds	3 seconds	3 seconds

- When the front-ECU receives a windshield washer switch signal from the column switch with the ignition switch in the ACC or the ON position, the ECU turns on the windshield washer relay. When the windshield washer relay becomes ON, the windshield washer motor starts to run to spray the washer fluid in the washer tank onto the windshield through the washer nozzles. When the windshield washer switch signal remains on for 0.3 second or more, the signal turns on the windshield wiper relay (The wiper interval depends on the condition. For details, see the list) to operate the windshield wiper at high speed. Turning off the windshield washer switch causes the front-ECU to turn off the windshield wiper relay "T" seconds later, thus operating the wiper to the auto stop position at low speed.
- When the windshield washer switch is turned ON during the intermittent operation of the windshield wiper, the windshield wiper switches to continuous operation and then resumes intermittent operation.
- If the ignition switch is turned to ACC while the windshield washer switch is being turned ON, the windshield washer relay becomes ON, but the windshield wiper does not activate linking with it. When the windshield washer switch is turned OFF and then ON, the windshield wiper makes the linking operation.

NOTE:

- *Using a customisation function, the driver can enable or disable the windshield wiper linked with washer function. For more information about the customisation feature.*
- *When the windshield wiper linked with washer function is disabled by the customisation feature, the windshield wiper does not operate in synchronization with the windshield washer. However, the windshield washer can be activated. It is useful to melt down the ices of the frozen windshield.*

REAR WIPER AND WASHER

REAR WIPER CONTROL [THE INITIAL CONDITION: 8 SECONDS (WITHOUT SUCCESSIVE OPERATIONS)]

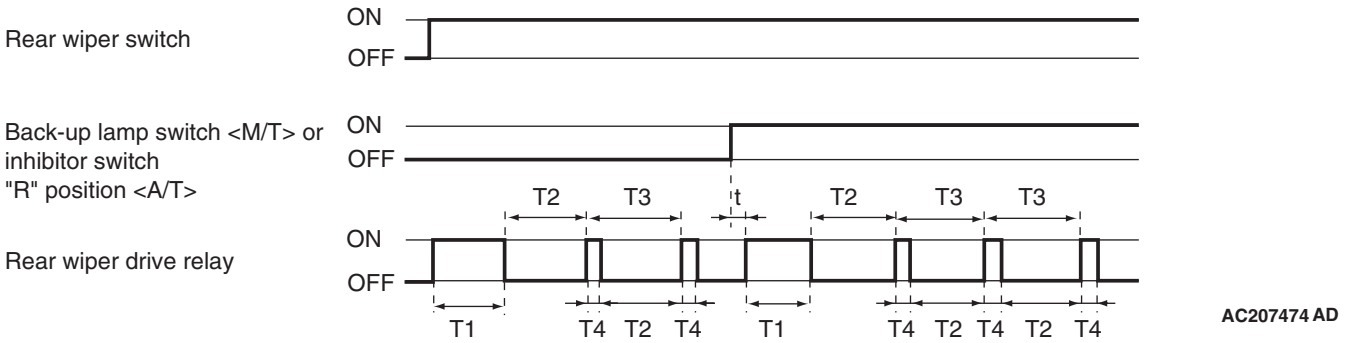

t: 1.0 second
T1: 3.0 seconds
T2: 7.4 seconds
T3: 8.0 seconds
T4: 0.6 second

1. When the rear wiper switch on the column switch is turned ON with the ignition switch at the ACC or ON position, ETACS-ECU turns ON the rear wiper drive signal for 3 seconds (approximately 2 operations) and performs the intermittent action at 8-second intervals.

When the shift lever <M/T> or selector lever <A/T> is moved to R position during the rear wiper operation, the back-up lamp switch <M/T> or inhibitor switch R position <A/T> turns ON one second after that, ETACS-ECU sends the rear wiper drive signal for 3 seconds (approximately 2 operations), and operates the intermittent action in 8 seconds interval.

2. By the special operation of the rear wiper switch on the column switch (successive 2-time operations), the rear wiper operates continuously regardless of the set intermittent time.

NOTE: The rear wiper intermittent time can be adjusted or cancelled for continuous operation by the customize function.

Main Index
Group TOC

REAR WIPER LINKED WITH WASHER FUNCTION (THE INITIAL CONDITION: WITH FUNCTION)

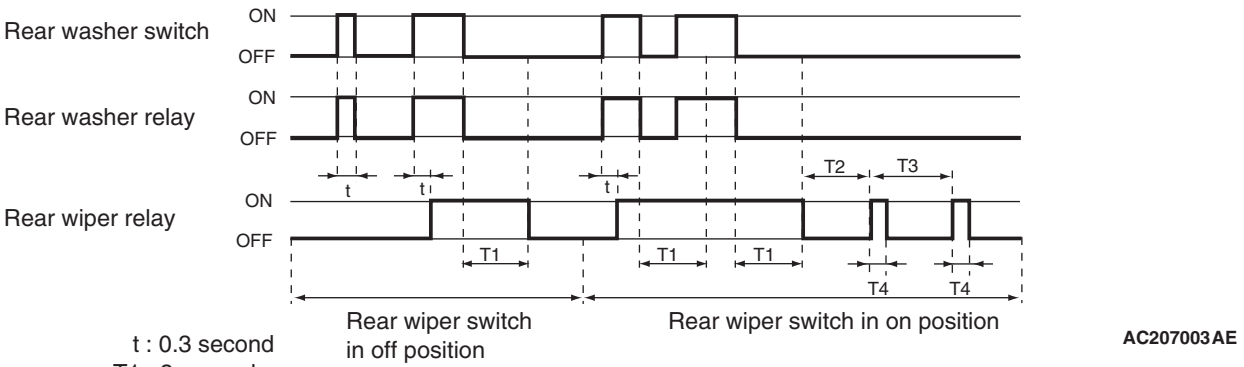

t : 0.3 second
T1 : 3 seconds
T2 : 7.4 seconds
T3 : 8 seconds
T4 : 0.6 second

- When the rear washer switch on the column switch is turned ON with the ignition switch ACC or ON, ETACS-ECU turns ON the rear washer relay. When the rear washer switch signal from the column switch remains ON for 0.3 second or more, ETACS-ECU turns ON the rear wiper relay to operate the rear wiper continuously. When the rear washer switch is turned OFF, the ETACS-ECU turns OFF the rear wiper relay 3 seconds later. Then the rear wiper stops at the auto stop position.
- Even turning ON the rear washer switch during rear wiper operation causes the rear wiper relay to switch the operation to continuous operation, and then the rear wiper resumes intermittent operation at intervals of eight seconds, 7.4 seconds after the completion of the continuous operation.

NOTE: Using a customisation function, a driver can enable or disable the rear wiper linked with washer function. For more information about the customisation feature.

ELECTRIC RETRACTABLE REMOTE CONTROLLED MIRROR

ELECTRIC RETRACTABLE REMOTE CONTROLLED MIRROR TIMER FUNCTION

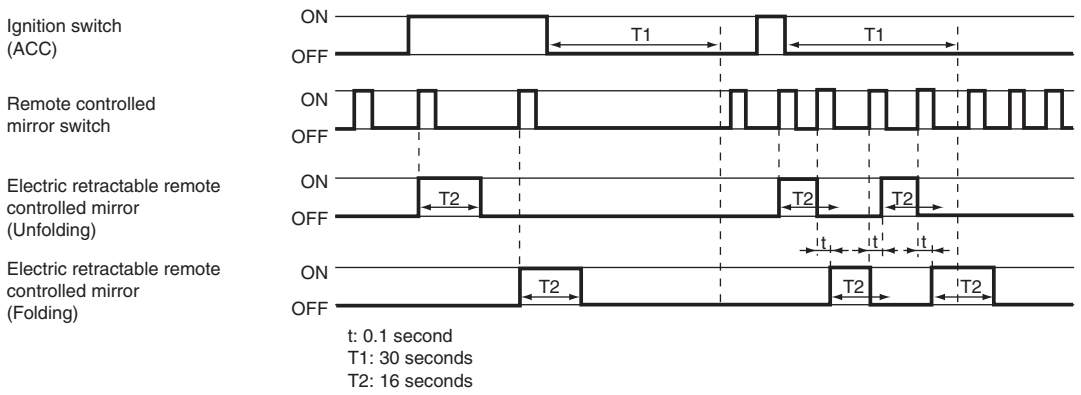

AC309810AB

When the unfolding/folding switch on the electric remote controlled mirror switch is turned ON with the ignition switch at the ACC or ON position, the retraction mirror relay is turned on for 16 seconds (unfolding/folding) to unfold or fold the door mirrors. Even after the ignition switch is turned OFF, the door mirrors can operate for 30 seconds.

If the unfolding/folding switch on the remote controlled mirror switch is turned ON while one of the retraction mirror relay is in operation (unfolding or folding), the other relay for the opposite motion is turned ON after 0.1 second.

NOTE: Whether the door mirrors are at the unfolding or folding position is determined according to the memory of the electric folding mirror relay operated previously. For this reason, if the mirrors are manually retracted, they may not move when the unfolding/folding switch is pressed next time.

AUTOMATIC UNFOLDING FUNCTION

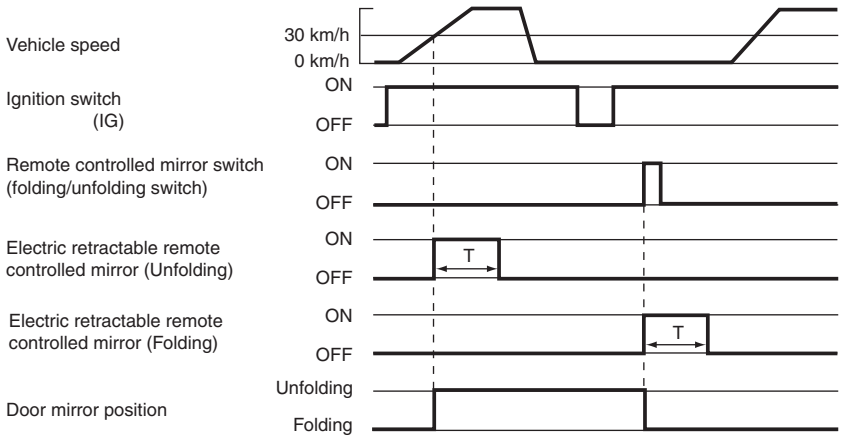

T : 16 seconds

AC207002AC

When the vehicle speed reaches 30 km/h, with the ignition switch ON and the mirrors retracted, ETACS-ECU turns on the retraction mirror relay (unfolding) for 16 seconds to return the door mirrors. However, the door mirrors do not return to their normal positions automatically if the ignition switch is turned from OFF to ON, and then the unfolding/folding switch on the remote controlled mirror switch is operated.

NOTE: Whether the door mirrors are at the unfolding or folding position is determined according to the memory of the retraction mirror relay operated previously. For this reason, if the mirrors are manually retracted, they may not move when the unfolding/folding switch is pressed next time.

Main Index
Group TOC

HEADLAMP

HEADLAMP AUTOMATIC-SHUTDOWN FUNCTION <EXCEPT VEHICLES FOR AUSTRALIA AND NEW ZEALAND> (THE INITIAL CONDITION: WITH FUNCTION)

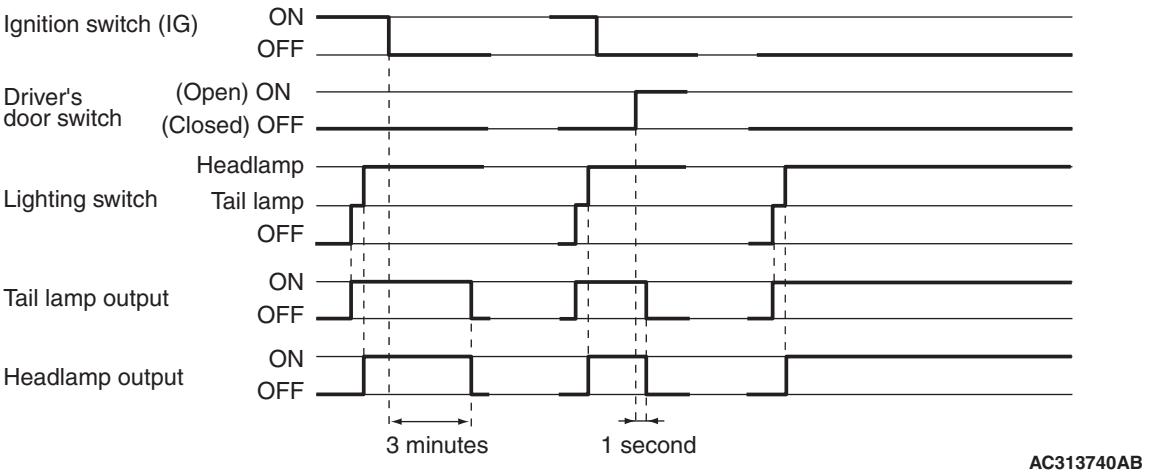

Even when the lighting switch (tail lamp switch or headlamp switch) is ON, the headlamp (including the tail lamps) turns off automatically with any of the following conditions to prevent the battery discharge caused by unattended operation.

- If the ignition switch is turned OFF with the lighting switch ON, the lamp turns off automatically after 3 minutes. If the driver's door is opened during the 3 minutes, the lamp turns off after one second. (One seconds before turning off, the lamp remainder buzzer sounds. However, if the driver's door is opened with the ignition key inserted, the key remainder alarm buzzer operates in the first priority).
- When the lighting switch is turned to the headlamp position (the headlamp switch is ON) from OFF with the ignition switch OFF, the headlamps and the tail lamps turn off 3 minutes after getting off (open/close of the driver's door).
- If the lighting switch is turned to the tail lamp position from OFF with the ignition switch OFF, the lamps do not turn off automatically.

NOTE: The auto-turn off can be made by the customize function.

After the headlamp automatic-shutdown function, when the lighting switch is turned OFF and then ON or, the ignition switch is turned ON, the head lamp turn on again.

HIGH-BEAM INDICATOR

The ETACS-ECU outputs the high beam indicator ON signal to the combination meter through CAN communication in synchronization with the high beam headlamp operation. The combination meter receives the transmitted signal and turns ON or OFF the high beam indicator.

FLASHER TIMER FUNCTION

TURN-SIGNAL LAMP (INITIAL SETTING: TURN SIGNAL LAMP CAN BE OPERATED WHEN THE IGNITION SWITCH IS IN THE ON POSITION)

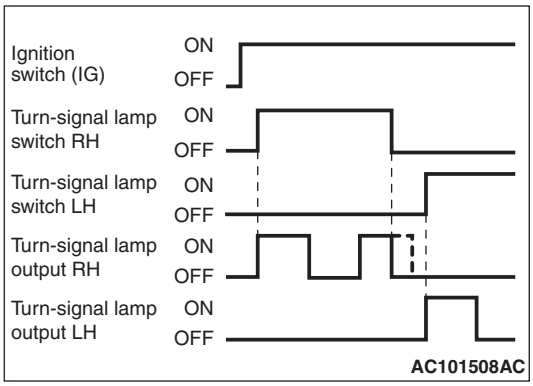

When the turn-signal lamp switch is ON (LH or RH) with the ignition switch is ON, the turn-signal lamp output (flash signal) is turned ON.

If the lamp bulb of the front or rear turn-signal lamp has burned out, the flashing speed becomes faster to alert the driver that the lamp bulb has burned out.

NOTE: Using a customisation function, this function becomes available even when the ignition switch is in the ACC position. For more information about the customisation feature.

HAZARD WARNING LAMP

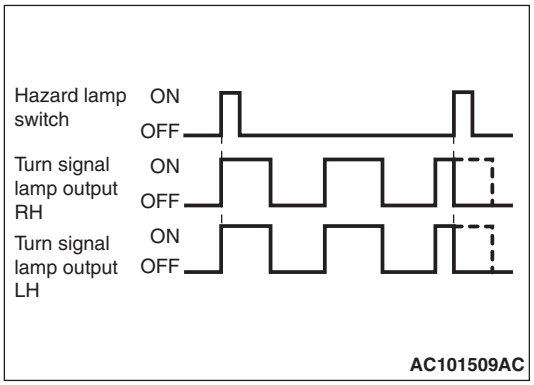

When the hazard lamp switch input signal turning from OFF to ON is detected, the flashing states turns over by the signal (When the hazard lamp is not blinking, it blinks. If it is blinking, it turns off).

NOTE:

1. *The push-return switch is adopted for the hazard lamp switch.*
2. *Even if the lamp bulb has burned out, the flashing speed of the hazard lamp is not changed.*

TURN-SIGNAL LAMP INDICATOR

The ETACS-ECU outputs the turn signal lamp indicator ON signal to the combination meter through CAN communication in synchronization with the turn signal lamp operation. The combination meter receives the transmitted signal and turns ON or OFF the turn-signal lamp indicator.

FRONT FOG LAMP

FRONT FOG LAMP CONTROL

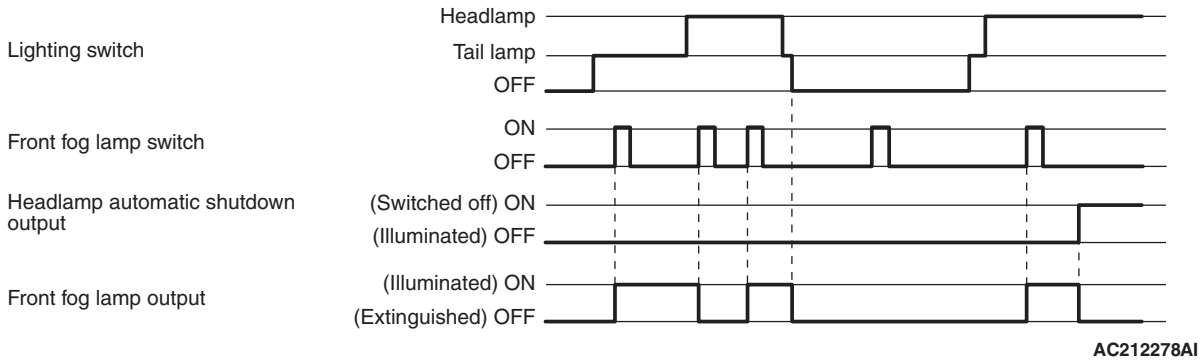

When the front fog lamp switch is turned to ON with the tail lamp or the headlamp lit (the taillamp switch or the headlamp switch is ON), the front fog lamp relay turns ON, and the front fog lamps turn on.
If the tail lamp or the headlamp is turned off with the lighting switch OFF while the front fog lamps lit, the front fog lamps turn off the same time to prevent unattended operation.
If the tail lamp is turned off by the headlamp automatic-shutdown function, the front fog lamps turn off at the same time. However, if the tail lamps turn on again, the front fog lamps do not.

FRONT FOG LAMP INDICATOR

The ETACS-ECU outputs the front fog lamp indicator ON signal to the combination meter through CAN communication in synchronization with the front fog lamp operation. The combination meter receives the transmitted signal and turns ON or OFF the front fog lamp indicator.

Main Index
Group TOC

INTERIOR LAMP

INTERIOR LAMP DIMMER CONTROL FUNCTION (THE INITIAL CONDITION: 15 SECONDS)

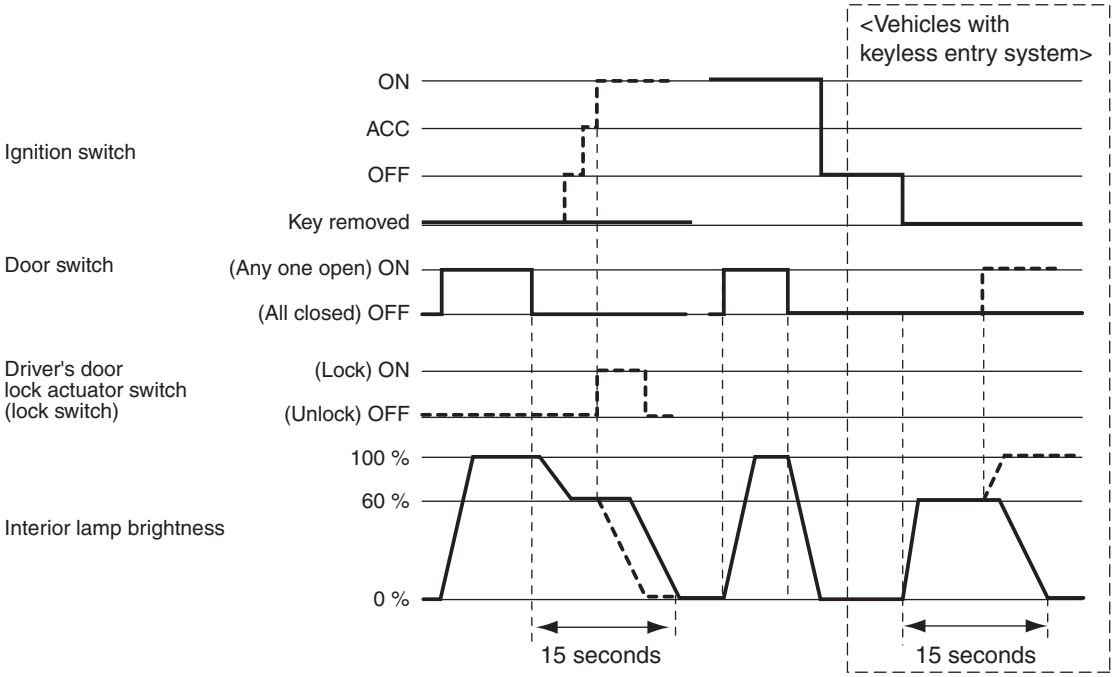

AC503755AB

When the interior lamp switch is on the door position, ETACS-ECU controls the interior lamp as follows.

1. When the ignition switch is OFF:

By opening any door or tailgate, the lamp turns ON (100%), and dims (60%) when the door or tailgate is closed, then and turns off after 15 seconds.

However, when the ignition switch is turned ON or the door lock is operated, the lamps turn off at that time.

2. When the ignition switch is ON:

By opening any door or tailgate, the lamp (100%) turns ON and OFF when the door or tail gate is closed.

3. When all doors and the tailgate are closed, and the ignition key is removed <Vehicles with keyless entry system>:

By removing the ignition key with all doors and the tailgate closed, the lamp turns ON 60%, and turns off after 15 seconds.

By inserting the ignition key again or operating the door lock with the lamp lit, the lamps turns off.

NOTE: For the vehicles with the keyless entry system, the delayed lamp-off time and the operation times of the keyless entry interior lamp answer back can be changed by the customize function.

Main Index
Group TOC

INTERIOR LAMP AUTOMATIC-SHUTOFF FUNCTION <VEHICLES WITH KEYLESS ENTRY SYSTEM> (THE INITIAL CONDITION: WITH FUNCTION)

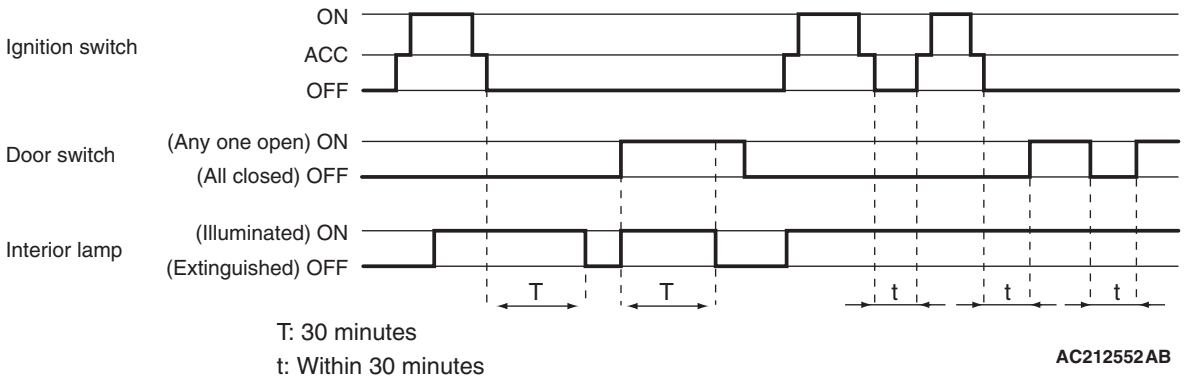

When the interior lamp such as the room lamp [all interior lamps connecting to the room lamp fuse (the front room lamp, the map lamp, the rear room lamp, and the ignition key cylinder illumination lamps)] is lit, but either one of the conditions is met, the interior lamp is turned off automatically for preventing the battery discharge caused by the unattended operation or the door-ajar.

- After 30 minutes with the interior lamp lit while the ignition switch is OFF, the lamp turns off automatically.
- After 30 minutes with any door opened while the ignition switch is OFF, the lamp turns off automatically.

After automatic shut-off function, the interior lamp turns ON when any of the following condition is met.

- Open and close doors.
- Operate the keyless entry transmitter.
- Turn the ignition switch to ACC or ON.

NOTE: The interior lamp automatic shut-off time can be adjusted by the customize function.

Main Index
Group TOC

IGNITION KEY CYLINDER ILLUMINATION LAMP AND FOOT LAMP CONTROL FUNCTION

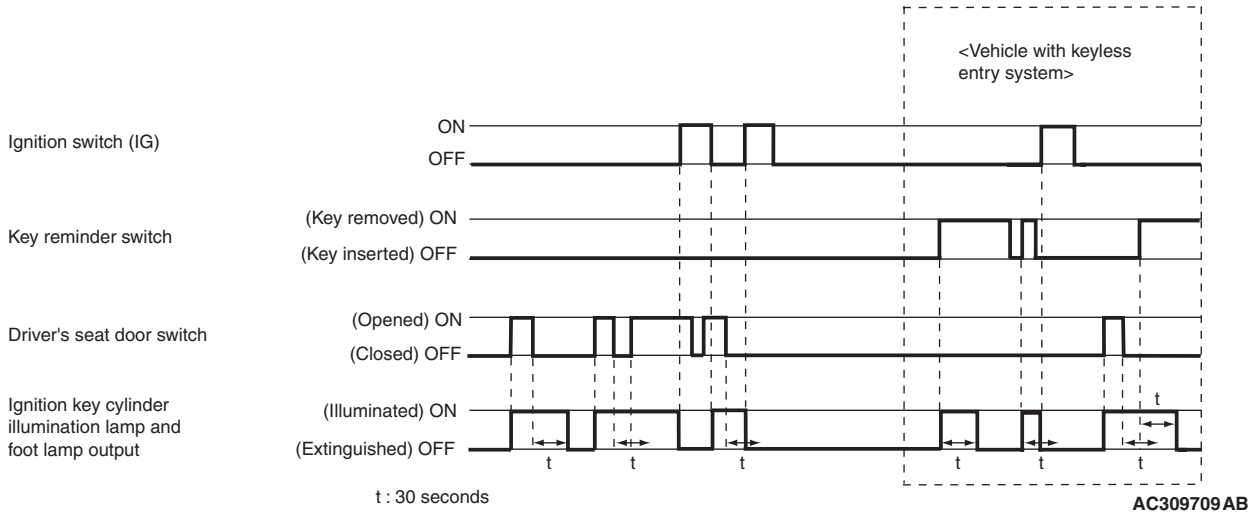

The ETACS-ECU controls the ignition key cylinder illumination lamp and foot lamp as described below.

1. The ignition key cylinder illumination lamp and foot lamp light for 30 seconds when the driver's door is opened/closed with the ignition switch OFF.
2. Also when the ignition key is removed from the ignition key cylinder, the lamp illuminates for 30 seconds. (Vehicles with keyless entry system only)
3. When the ignition key cylinder illumination lamp and foot lamp is operating with the doors closed, it goes out if the ignition switch is turned ON.

DOOR-AJAR INDICATOR

The ETACS-ECU outputs the open/close status of each door to the combination meter through CAN communication. The combination meter receives the transmitted signal and turns ON and OFF the door-ajar indicator. The door-ajar indicator flashes when the door-ajar warning function is activated while the door-ajar indicator is ON (For more information about the door-ajar warning function, refer to).

Main Index
Group TOC

SEAT BELT INDICATOR <VEHICLES FOR GCC, AUSTRALIA AND NEW ZEALAND>

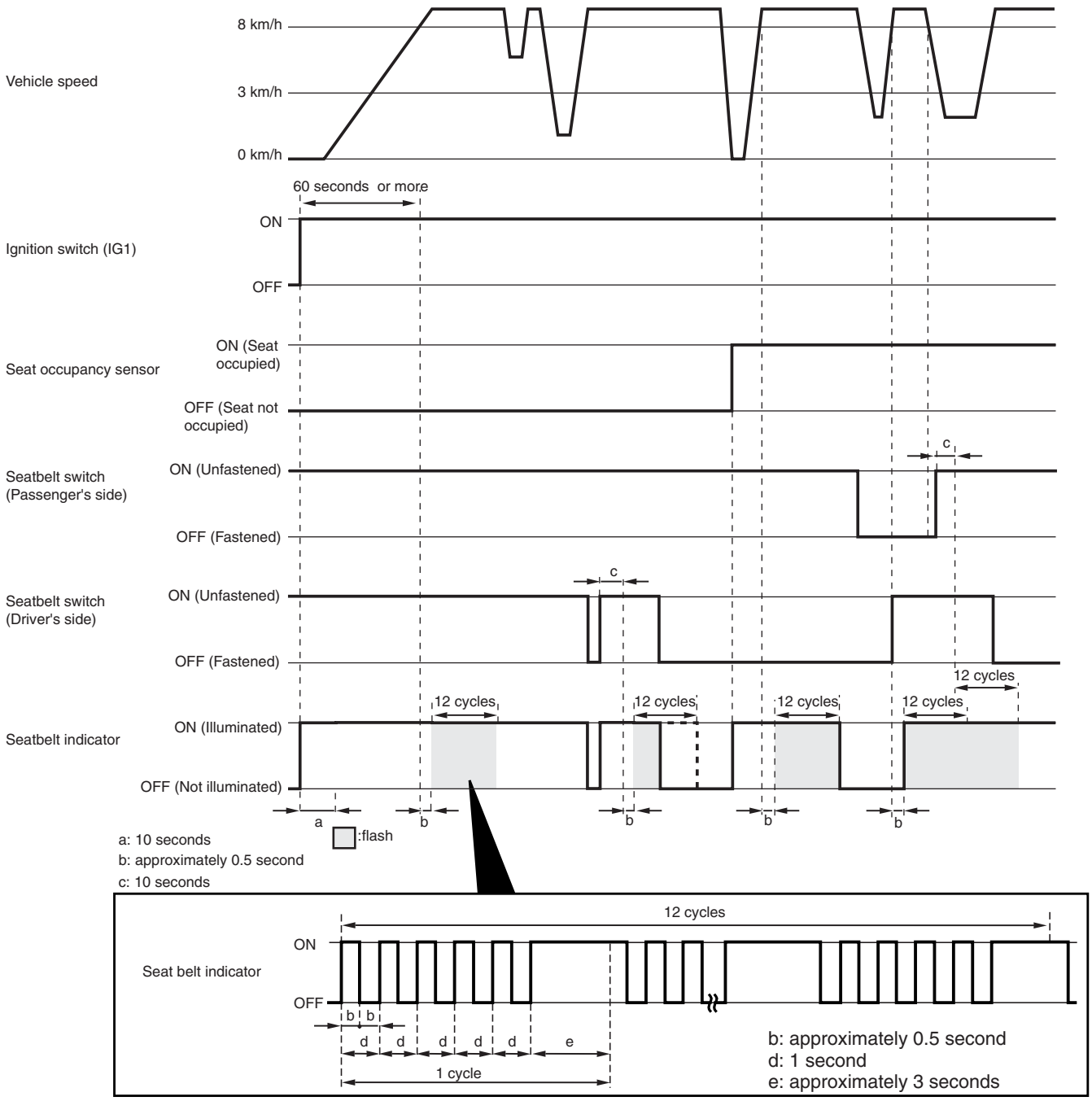

AC309955AB

The ETACS-ECU outputs the driver's seat belt buckle engagement status to the combination meter through CAN communication. The combination meter receives the transmitted signal and turns ON and OFF the seat belt indicator. The seat belt indicator flashes when the seat belt warning function is activated while the seat belt indicator is ON. On vehicles except for Australia and New Zealand, the seat belt indicator function is only applied to the driver's seat belt (For more information about the seat belt warning function, refer to).

Main Index
Group TOC

SPECIAL TOOLS

M1549000301303

Tool	Number	Name	Use
a 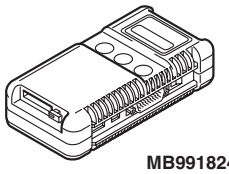 MB991824 b 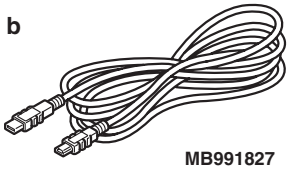 MB991827 c 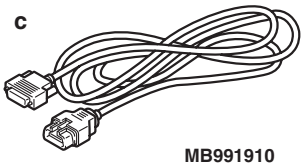 MB991910 d 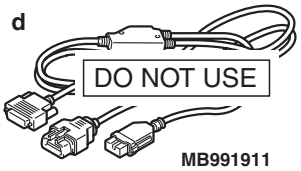 MB991911 e 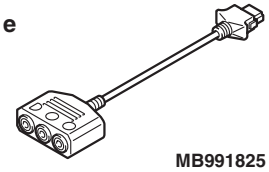 MB991825 f 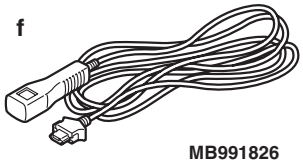 MB991826 MB991955	MB991955 a. MB991824 b. MB991827 c. MB991910 d. MB991911 e. MB991825 f. MB991826	M.U.T.-III sub-assembly a. Vehicle Communication Interface (V.C.I.) b. M.U.T.-III USB cable c. M.U.T.-III main harness A (Vehicles with CAN communication system) d. M.U.T.-III main harness B (Vehicles without CAN communication system) e. M.U.T.-III measure adapter f. M.U.T.-III trigger harness	SWS communication line check (ECU check and service data) **⚠ CAUTION** **M.U.T.-III main harness B (MB991911) should be used. M.U.T.-III main harness A should not be used for this vehicle.**

Main Index
Group TOC

Tool	Number	Name	Use
a 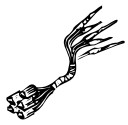 b 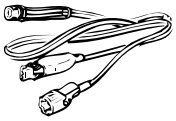 c 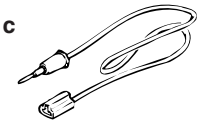 d DO NOT USE MB991223	MB991223 a. MB991219 b. MB991220 c. MB991221 d. MB991222	Harness set a. Check harness b. LED harness c. LED harness adapter d. Probe	Continuity check and voltage measurement at harness wire or connector a. For checking connector pin contact pressure b. For checking power supply circuit c. For checking power supply circuit d. For connecting a locally sourced tester
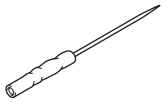 MB992006	MB992006	Extra fine probe	Continuity check and voltage measurement at harness wire or connector
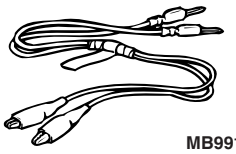 MB991529	MB991529	Diagnosis code check harness	Input signal check by using a voltmeter

Main Index
Group TOC

TROUBLESHOOTING

PRIOR TO TROUBLESHOOTING

M1549014700572

Before carrying out troubleshooting, check the following two items.

- Make sure that the ETACS-ECU, the junction block (J/B), the front-ECU and the engine compartment relay box are connected securely.
- Check that the system fuses and fusible links are not burned out.

STANDARD FLOW OF DIAGNOSTIC TROUBLESHOOTING

M1549000500768

Refer to GROUP 00 – How to Use Troubleshooting/Inspection Service Points P.00-5.

DIAGNOSTIC FUNCTION

M1549028900160

HOW TO READ DIAGNOSIS CODE

Use the M.U.T.-III to read diagnosis code (Refer to GROUP 00 – How to Use Troubleshooting/Inspection Service Points P.00-5).

NOTE: Connect the M.U.T.-III to the 16-pin diagnosis connector (black).

NOTE: A diagnosis code can not be read when the ETACS-ECU is defective or the power supply voltage has risen. In this case, refer to inspection procedure A-1 "Communication with the M.U.T.-III is not possible P.54B-67."

HOW TO CHECK INPUT SIGNALS

1. Use the M.U.T.-III or a voltmeter to check input signals (Refer to GROUP 00 – How to Use Troubleshooting/Inspection Service Points P.00-5).
2. The input signals below can be checked by connecting the M.U.T.-III or a voltmeter to the diagnosis connector.

NOTE: If a fault is found at the input signal check, refer to trouble symptom chart P.54B-63.

SWITCHES WHICH ARE APPLICABLE TO INPUT SIGNAL CHECK, AND THEIR CHECK CONDITIONS

Input signals	Requirements for sounding buzzer
Ignition switch (ACC)	When turned from the LOCK (OFF) position to the ACC position
Ignition switch (IG1)	When turned from ACC to ON
Back-up lamp switch	When the ignition switch is turned ON and the shift lever is moved to the R position.
Inhibitor switch ("R" position)	When the ignition switch is turned ON and the selector lever is moved to the R position.
Key reminder switch <Vehicles with keyless entry system>	When the inserted ignition key is pulled out
Hazard warning lamp switch	When the switch is turned from off to on
Front fog lamp switch	
Rear fog lamp switch <Vehicles for China>	
Driver's door switch	When the driver's door is opened
All of the door switches	A door is opened when all the doors are closed
Tailgate switch	When the tailgate is opened
Driver's door lock actuator	When the driver's key cylinder or inside lock knob is unlocked or locked
Passenger’s door lock key cylinder switch	When the passenger’s key cylinder is unlocked or locked
Tailgate key switch <vehicles without keyless entry system>	When the tailgate key cylinder is unlocked or locked.
Driver’s seat belt switch	When the driver's seat belt is fastened

Main Index
Group TOC

Input signals		Requirements for sounding buzzer
Passenger's seat belt switch		When the front passenger is occupied and the seat belt is fastened
Electric-folding outside mirror switch		When the electric-folding outside mirror is operated
Vehicle speed signal		When the vehicle speed has reached 10 km/h or more
Column switch	Tail lamp switch	When the lighting switch is moved from the automatic lamp position to the tail lamp position.
	Headlamp switch	When the lighting switch is moved from the tail lamp position to the automatic lamp position.
	Dimmer switch	When the switch is turned from off to on
	Passing lamp switch	
	Turn-signal lamp switch (LH)	
	Turn-signal lamp switch (RH)	
	Wind shield mist wiper switch	
	Windshield intermittent wiper switch	
	Windshield low-speed wiper switch	
	Windshield high-speed wiper switch	
	Windshield intermittent wiper volume	When the windshield intermittent wiper volume is rotated from "FAST" to "SLOW" (a pulse is sent around the volume middle position)
	Windshield washer switch	When the switch is turned from off to on
	Rear wiper switch	
	Rear washer switch	
Keyless entry transmitter	Switches	When the switch is turned from off to on
Interior lamp loaded signal <Vehicles for keyless entry system>		When a load is applied through multi-purpose fuse No.18

Main Index
Group TOC

DIAGNOSIS CODE CHART

M1549000700687

Diagnosis code No.	Diagnostic item	Reference page
01	Trouble in SWS communication line system or ETACS-ECU	P.54B-27
02	Communication error with column switch	P.54B-29
03	Communication error with front-ECU	P.54B-36
04*1	Communication error with sunroof-ECU	P.54B-42
05*2	Communication error with power window main switch	–
10	Bus off	P.54B-50
11	Engine-A/T-ECU <A/T> or engine-ECU <M/T> Time-out (related with the engine)	P.54B-50
12*3	Engine-A/T-ECU time-out (related to A/T)	P.54B-52
13	A/C-ECU time-out	P.54B-53
14	Meter time-out	P.54B-55
15*4	Centre display unit time-out	–
21	Meter failure information	P.54B-56

NOTE:

- **1: For vehicles without sunroof, diagnosis code No.4 does not mean that there is a problem.*
- **2: Diagnosis code No.05 does not mean that there is a problem.*
- **3: For M/T-vehicles, diagnosis code No.12 does not mean that there is a problem.*
- **4: Diagnosis code No.15 does not mean that there is a problem.*

Main Index
Group TOC

DIAGNOSTIC TROUBLE CODE PROCEDURES

Code No.01 Trouble in SWS communication line system or ETACS-ECU

⚠ CAUTION
If diagnosis code No.01 is set in the ETACS-ECU, diagnose the CAN bus lines.

SWS Communication Line

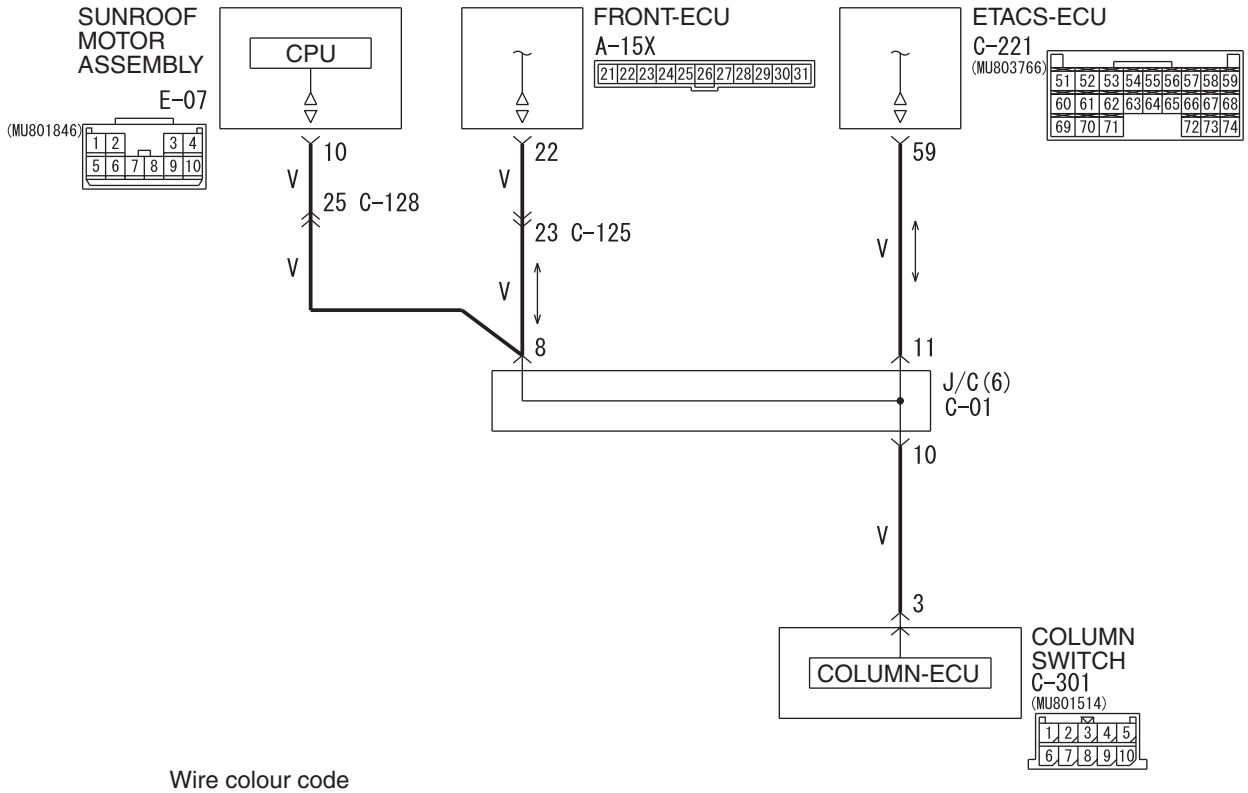

Wire colour code
B : Black LG : Light green G : Green L : Blue W : White Y : Yellow SB : Sky blue
BR : Brown O : Orange GR : Grey R : Red P : Pink V : Violet PU : Purple

W6X54X033A

TROUBLE JUDGMENT

The ETACS-ECU communicates with the column switch, the front-ECU, the sunroof motor assembly and the power window main switch through the SWS communication line. If there is any trouble in the ETACS-ECU or the SWS communication lines , diagnosis code No.01 will be set.

COMMENT ON TROUBLE SYMPTOM

The wiring harness wire or connectors may have loose, corroded, or damage terminals, or terminals pushed back in the connector, or the ETACS-ECU may be defective.

PROBABLE CAUSES

- Malfunction of the ETACS-ECU
- Damaged harness wires and connectors

DIAGNOSIS PROCEDURE

STEP 1. M.U.T.-III CAN bus diagnostics
Use the M.U.T.-III to diagnose the CAN bus lines.

Q: Is the check result normal?
YES : Go to Step 2.
NO : Repair the CAN bus line (Refer to GROUP 54F – Troubleshooting P.54F-13).

Main Index
Group TOC

STEP 2. Check whether the diagnosis code is reset.

Check again if the diagnosis code is set.

(1) Ignition switch: LOCK (OFF) position to ON
(2) Erase the diagnosis code.
(3) On completion, check that the diagnosis code is not reset.

Q: Is the check result normal?

YES : . If a trouble is solved, it is determined that there is an intermittent malfunction such as poor engaged connector(s) or open circuit (Refer to GROUP 00 – How to use troubleshooting/Inspection Service Points P.00-5).

NO : . Replace the ETACS-ECU.

Diagnosis code No.02 Communication error with column switch

⚠ CAUTION

If diagnosis code No.02 is set in the ETACS-ECU, diagnose the CAN bus lines.

Column Switch Power Supply and SWS Communication Circuit

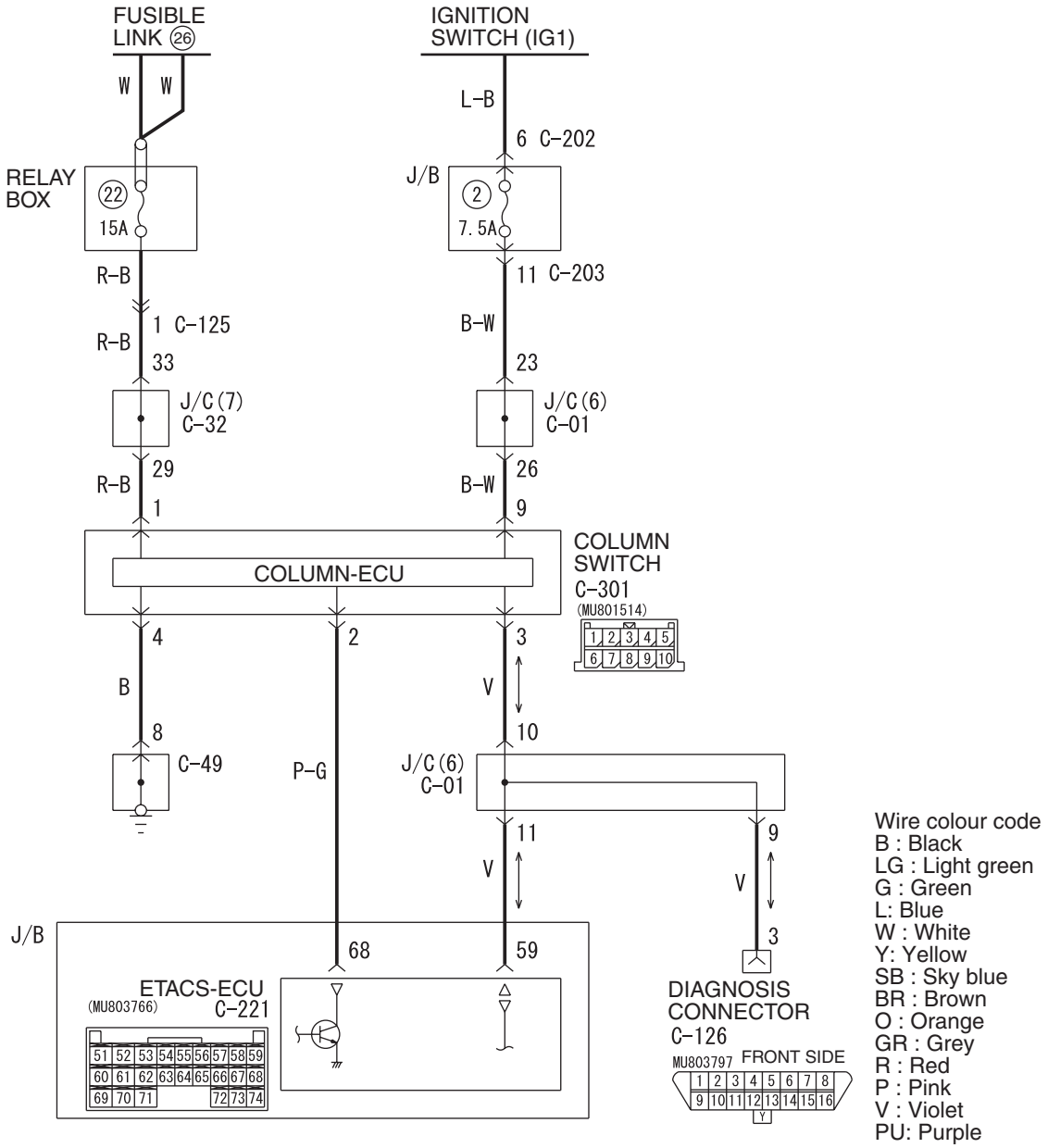

TROUBLE JUDGMENT

The ETACS-ECU communicates with the column switch through the SWS communication lines. If there is any trouble in that communication, diagnosis code No.02 will be set.

COMMENT ON TROUBLE SYMPTOM

The column switch, the ETACS-ECU, connector(s), or wiring harness between the two may be defective.

Main Index
Group TOC

POSSIBLE CAUSES

- Malfunction of the column switch
- Malfunction of the ETACS-ECU
- Damaged harness wires and connectors

DIAGNOSIS PROCEDURE

Step 1. M.U.T.-III CAN bus diagnostics

Use the M.U.T.-III to diagnose the CAN bus lines.

Q: Is the check result normal?

YES : Go to Step 2.

NO : Repair the CAN bus line (Refer to GROUP 54F – Troubleshooting P.54F-13).

Step 2. Use the M.U.T.-III to confirm a diagnosis code. (M.U.T.-III diagnosis code)

(1) Ignition switch: ON

(2) On completion, check that diagnosis code No.02 is not reset.

Q: Is diagnosis code No.02 set?

YES : Go to Step 6.

NO : Go to Step 3.

Step 3. Connector check: C-301 column switch connector

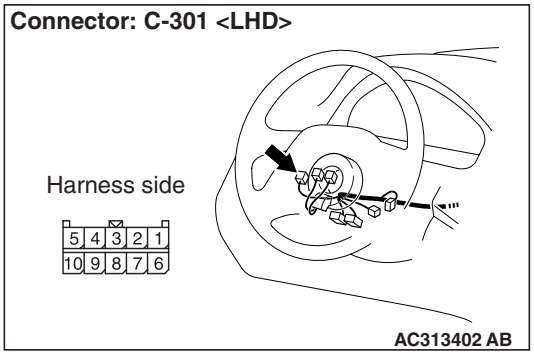

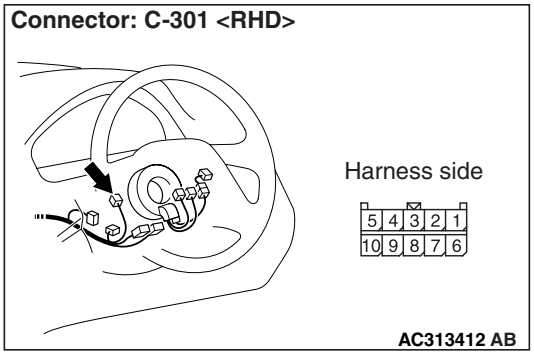

Q: Is the check result normal?

YES : Go to Step 4.

NO : Repair the defective connector.

Step 4. Voltage measurement at the C-301 column switch connector.

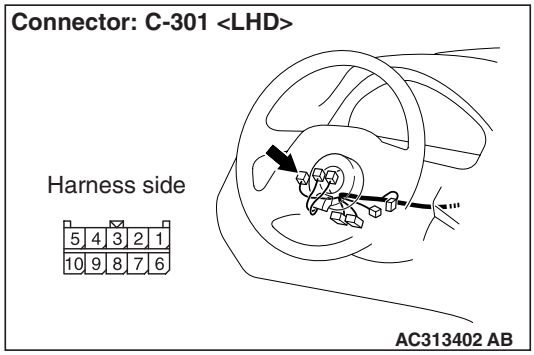

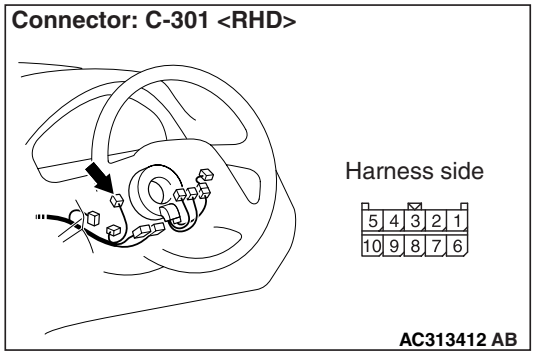

(1) Remove the column switch, and measure at the wiring harness side.

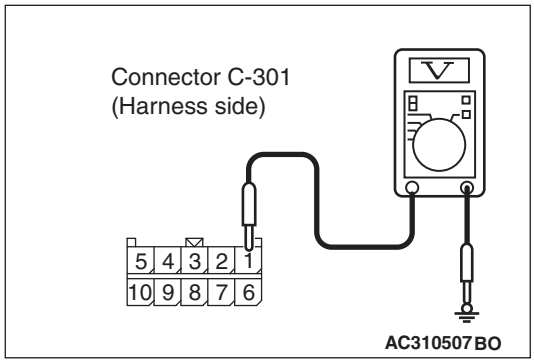

(2) Voltage between C-301 column switch connector terminal No.1 and body earth

OK: System voltage

Q: Is the check result normal?

YES : Replace the column switch.

NO : Go to Step 5.

Main Index
Group TOC

Step 5. Check the wiring harness between C-301 column switch connector terminal No.1 and the fusible link (26).

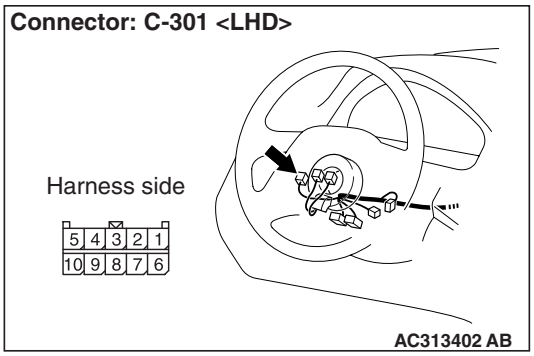

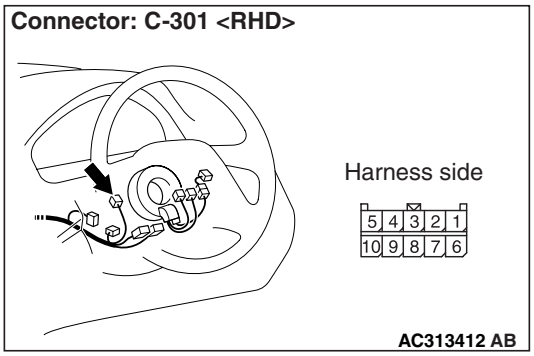

NOTE:

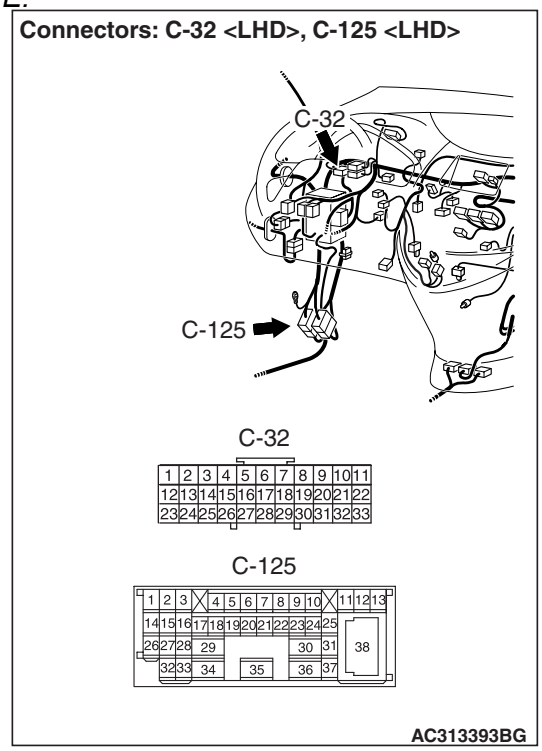

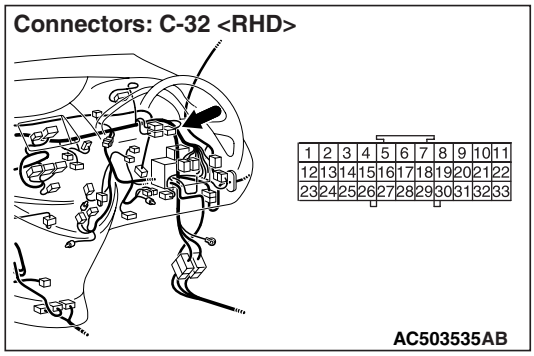

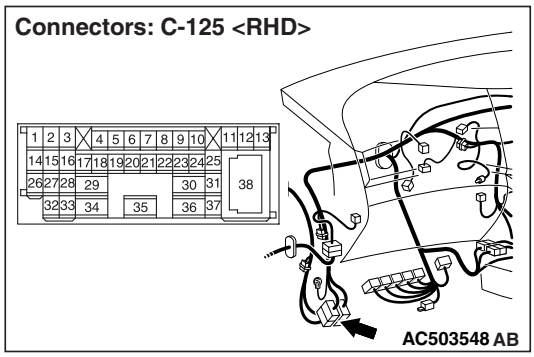

Prior to the wiring harness inspection, check intermediate connector C-125 and joint connector C-32, and repair if necessary.

- Check the power supply line for open circuit.

Q: Is the check result normal?

YES : The trouble can be an intermittent malfunction (Refer to GROUP 00 – How to Cope with Intermittent Malfunction P.00-5).

NO : Repair the wiring harness.

Main Index
Group TOC

Step 6. Resistance measurement at the C-301 column switch connector.

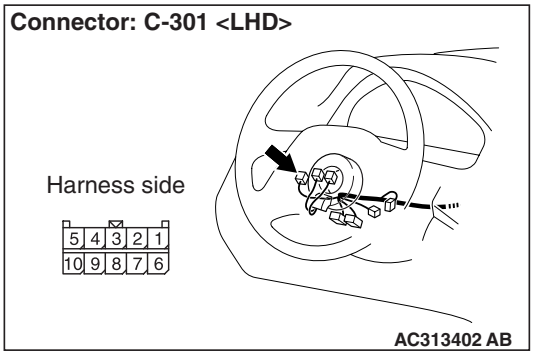

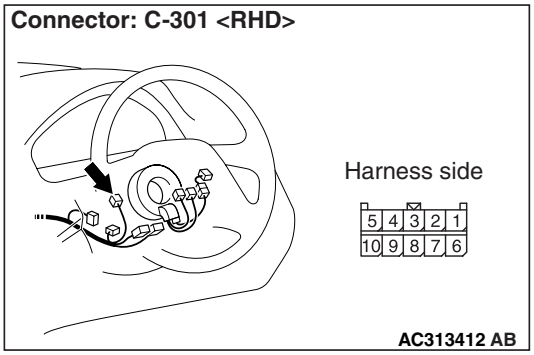

(1) Remove the column switch, and measure at the wiring harness side.

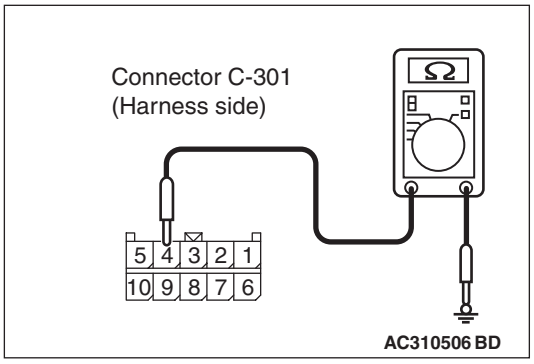

(2) Continuity between C-301 column switch connector terminal No.4 and body earth

OK: 2 Ω or less

Q: Is the check result normal?
YES : Go to Step 9.
NO : Go to Step 7.

Step 7. Connector check: C-49 earth connector

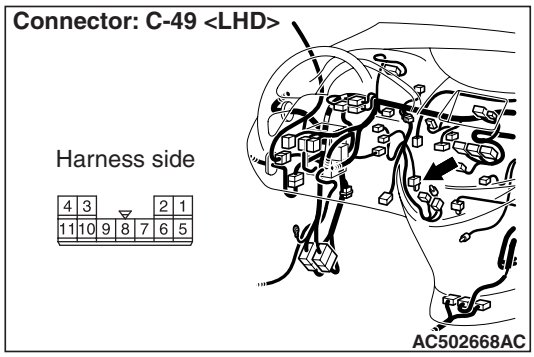

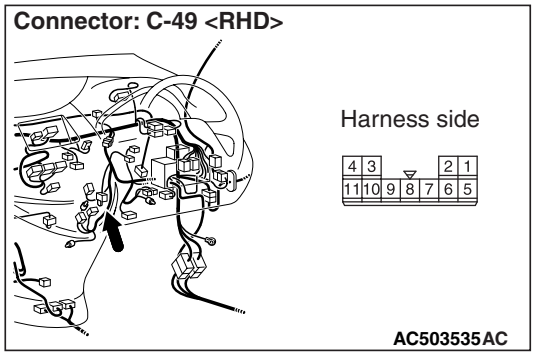

Q: Is the check result normal?
YES : Go to Step 8.
NO : Repair the connector.

Main Index
Group TOC

Step 8. Check the wiring harness between C-301 column switch connector terminal No.4 and C-49 earth connector terminal No.8.

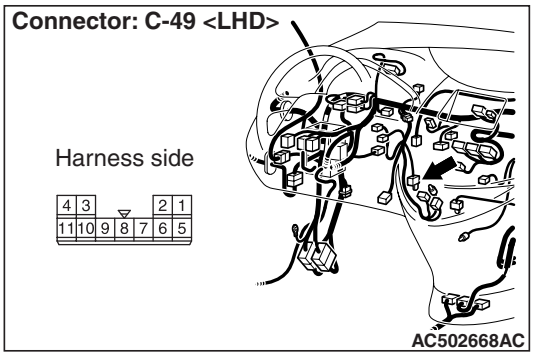

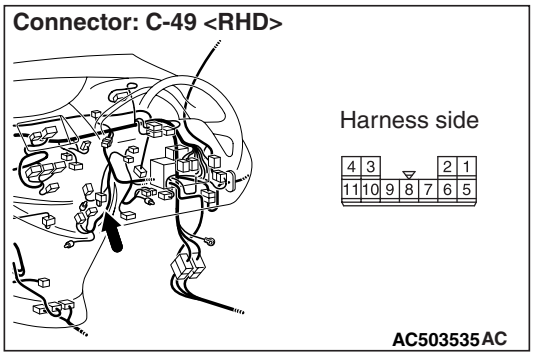

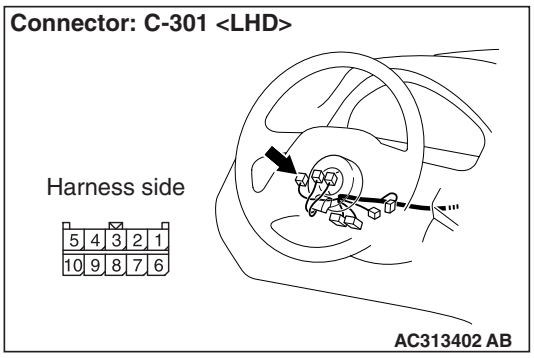

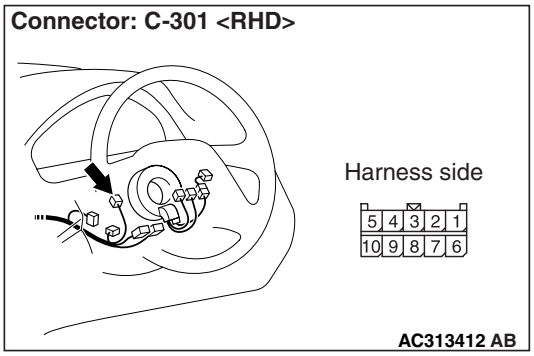

- Check the earth wires for open circuit.

Q: Is the check result normal?

YES : The trouble can be an intermittent malfunction (Refer to GROUP 00 – How to Cope with Intermittent Malfunction P.00-5).

NO : Repair the wiring harness.

Step 9. Connector check: C-221 ETACS-ECU connector

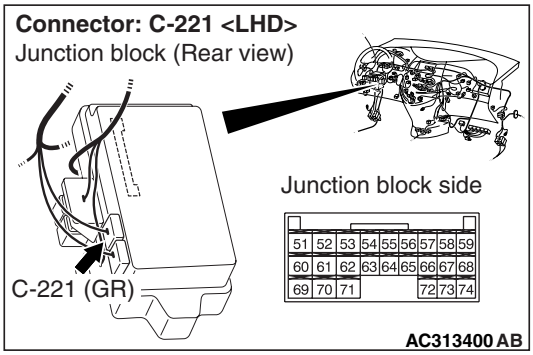

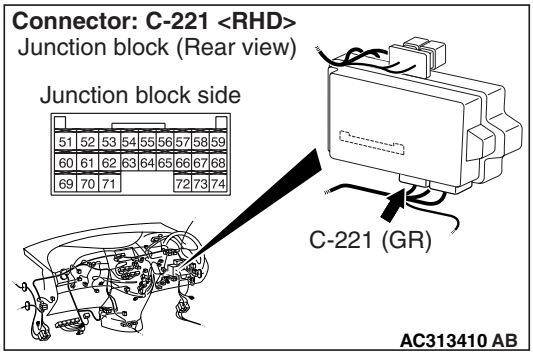

Q: Is the check result normal?

YES : Go to Step 10.

NO : Repair the defective connector.

Main Index
Group TOC

Step 10. Check the wiring harness from C-221 ETACS-ECU connector terminal Nos. 59 and 68 to C-301 column switch connector terminal Nos. 3 and 2.

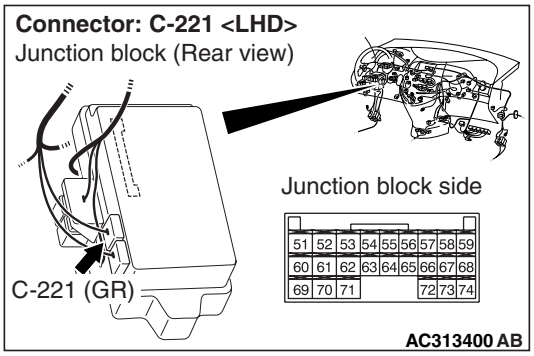

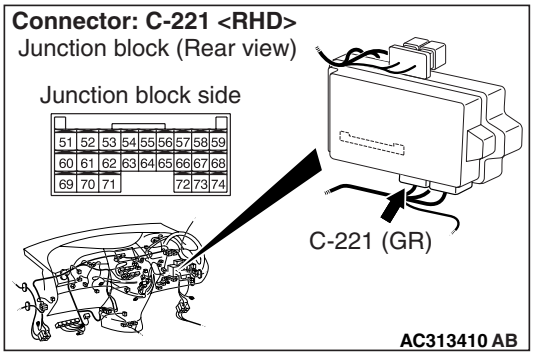

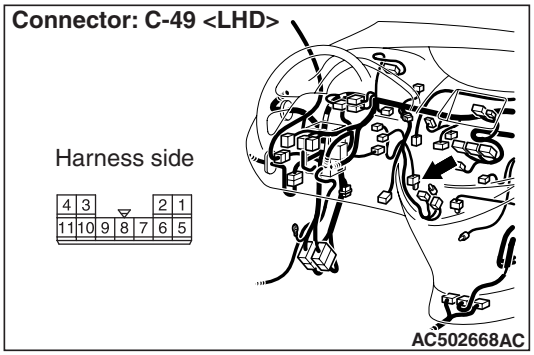

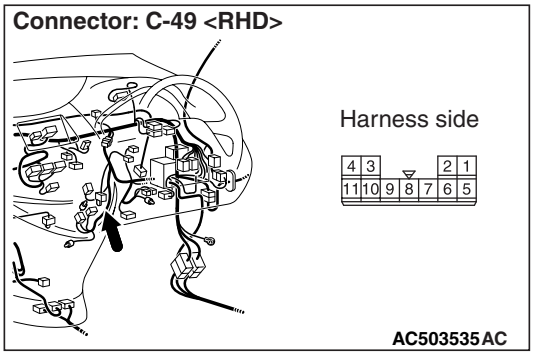

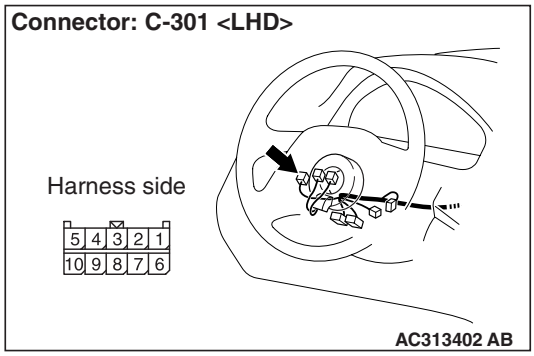

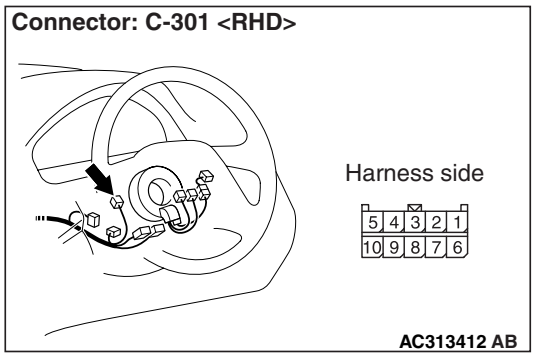

NOTE:

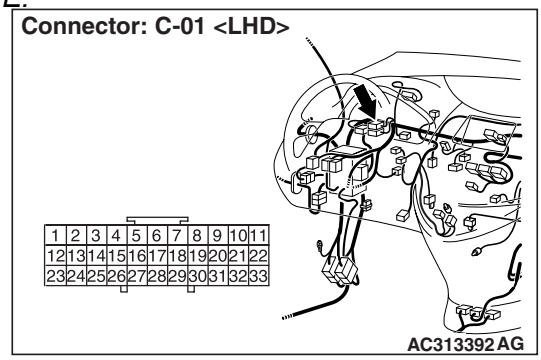

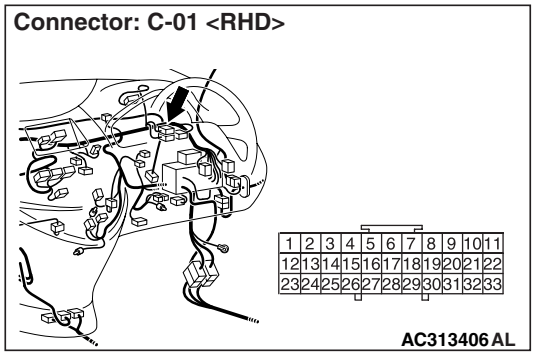

Prior to the wiring harness inspection, check joint connector C-01, and repair if necessary.

- Check the communication lines for open circuit.

Q: Is the check result normal?

YES : Go to Step 11.

NO : Repair the wiring harness.

Main Index
Group TOC

Step 11. Check whether the diagnosis code is reset.

Replace the column switch, and then check that the diagnosis code is not reset.

(1) Replace the column switch.
(2) Ignition switch: ON
(3) On completion, check that diagnosis code No.02 is not reset.

Q: Is diagnosis code No.02 set?

YES : . Replace the ETACS-ECU.
NO : . The procedure is complete.

Main Index
Group TOC

Diagnosis code No.03 Communication error with front-ECU

⚠ CAUTION

If diagnosis code No.03 is set in the ETACS-ECU, diagnose the CAN bus lines.

Front-ECU Power Supply and SWS Communication Circuit

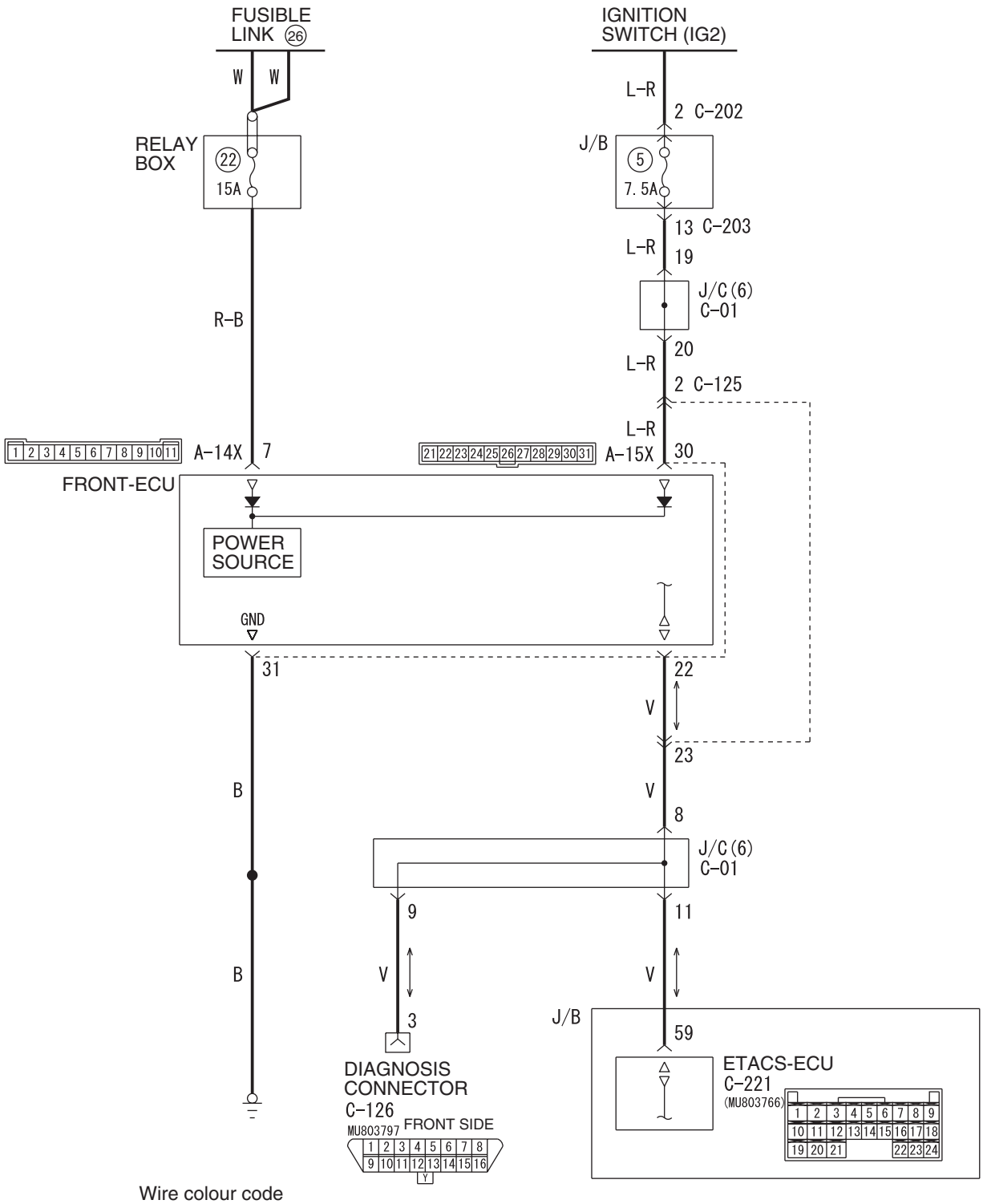

Wire colour code
B : Black LG : Light green G : Green L : Blue W : White Y : Yellow SB : Sky blue
BR : Brown O : Orange GR : Grey R : Red P : Pink V : Violet PU : Purple

W6X54X032A

Main Index
Group TOC

TROUBLE JUDGMENT

The ETACS-ECU communicates with the front-ECU through the SWS communication line. If there is any trouble in that communication, diagnosis code No.03 will be set.

COMMENTS ON TROUBLE SYMPTOM

The front-ECU, the ETACS-ECU, connector(s), or wiring harness between the two may be defective.

POSSIBLE CAUSES

- Malfunction of the front ECU
- Malfunction of the ETACS-ECU
- Damaged harness wires and connectors

DIAGNOSIS PROCEDURE

Step 1. M.U.T.-III CAN bus diagnostics

Use the M.U.T.-III to diagnose the CAN bus lines.

Q: Is the check result normal?

YES : Go to Step 2.

NO : Repair the CAN bus line (Refer to GROUP 54F – Troubleshooting P.54F-13).

Step 2. M.U.T.-III diagnosis code

(1) Ignition switch: ON

(2) On completion, check that diagnosis code No.03 is not reset.

Q: Is diagnosis code No.03 set?

YES : Go to Step 6.

NO : Go to Step 3.

Step 3. Connector check: A-14X front-ECU connector

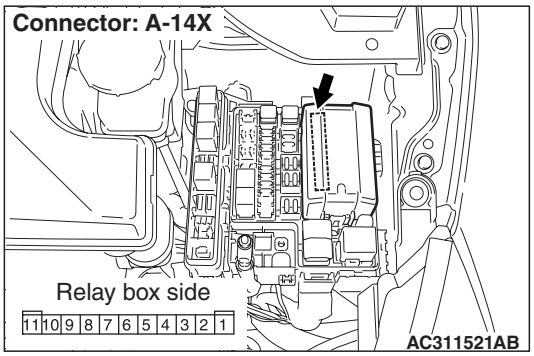

Q: Is the check result normal?

YES : Go to Step 4.

NO : Repair the defective connector.

Step 4. Voltage measurement at the A-14X front-ECU connector.

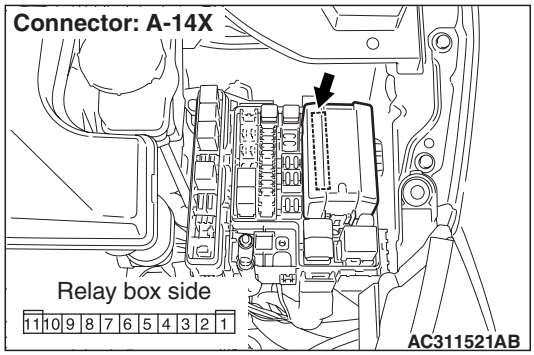

(1) Remove the front-ECU, and measure at the relay box side.

(2) Ignition switch: ON

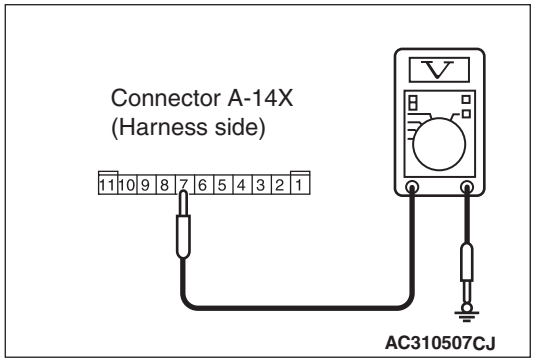

(3) Voltage between A-14X front-ECU connector terminal No.7 and body earth

OK: System voltage

Q: Is the check result normal?

YES : Replace the front-ECU.

NO : Go to Step 5.

Main Index
Group TOC

Step 5. Check the wiring harness between A-14X front-ECU connector terminal No.7 and the fusible link (26).

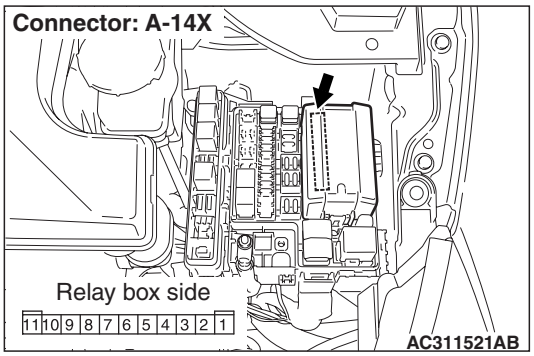

- Check the power supply line for open circuit.

Q: Is the check result normal?
YES : The trouble can be an intermittent malfunction (Refer to GROUP 00 – How to Cope with Intermittent Malfunction P.00-5).
NO : Repair the wiring harness.

Step 6. Connector check: A-15X front-ECU connector

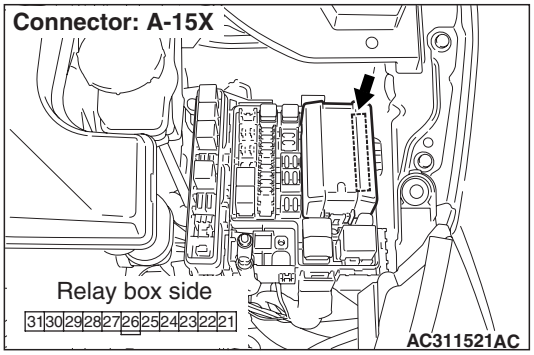

Q: Is the check result normal?
YES : Go to Step 7.
NO : Repair the defective connector.

Step 7. Resistance measurement at the A-15X front-ECU connector.

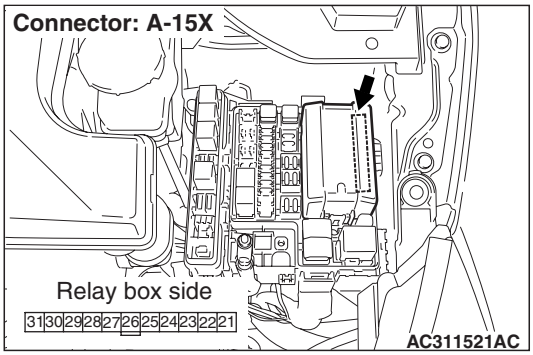

(1) Remove the front-ECU, and measure at the relay box side.

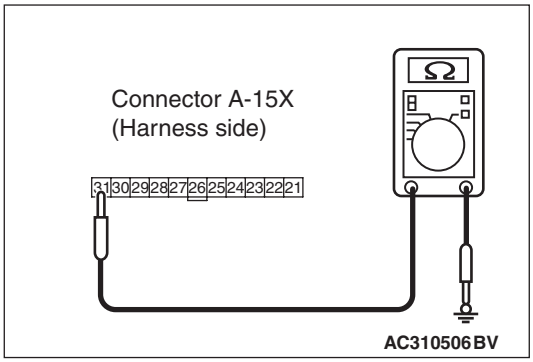

(2) Resistance between A-15X front-ECU connector terminal No.31 and body earth

OK: 2 Ω or less

Q: Is the check result normal?
YES : . Go to Step 9.
NO : . Go to Step 8.

Main Index
Group TOC

Step 8. Check the wiring harness between A-15X front-ECU connector terminal No.31 and body earth.

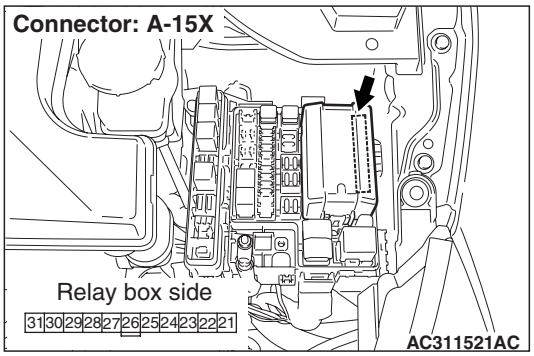

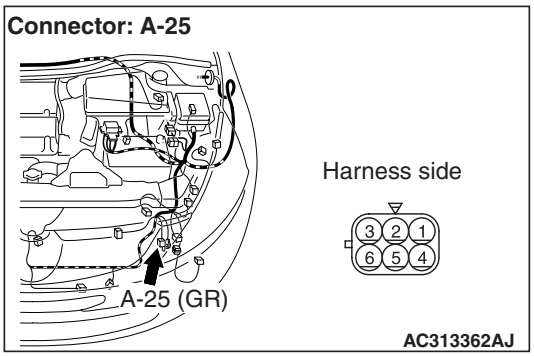

- Check the earth wires for open circuit.

Q: Is the check result normal?

YES : The trouble can be an intermittent malfunction (Refer to GROUP 00 – How to Cope with Intermittent Malfunction P.00-5).

NO : Repair the wiring harness.

Step 9. Connector check: C-221 ETACS-ECU connector

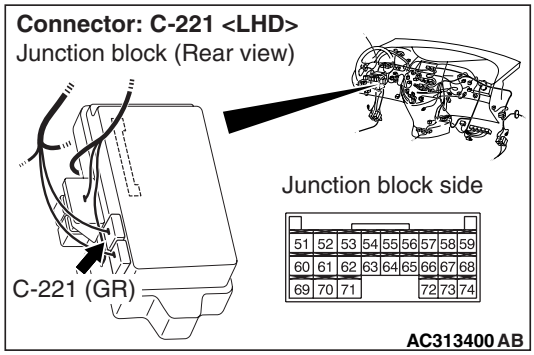

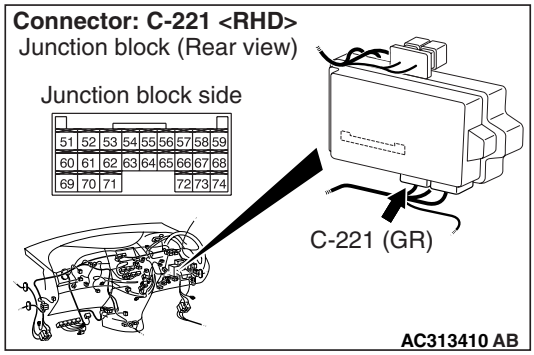

Q: Is the check result normal?

YES : Go to Step 10.

NO : Repair the defective connector.

Main Index
Group TOC

Step 10. Check the wiring harness between C-221 ETACS-ECU connector terminal No.59 and A-15X front-ECU connector terminal No.22.

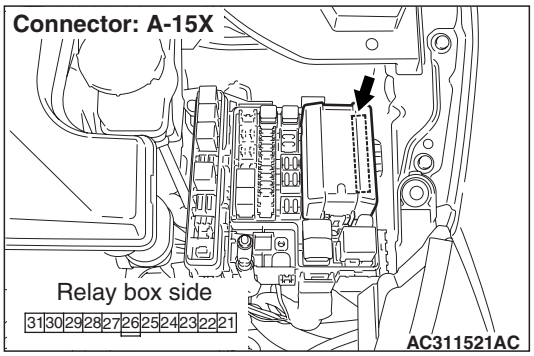

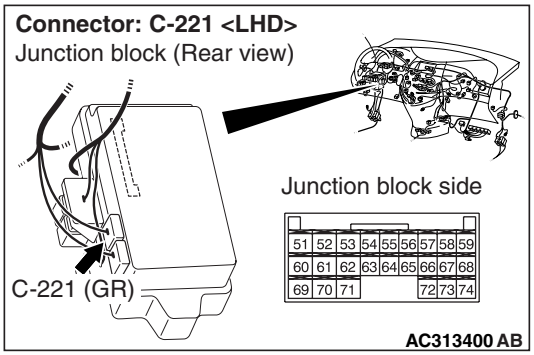

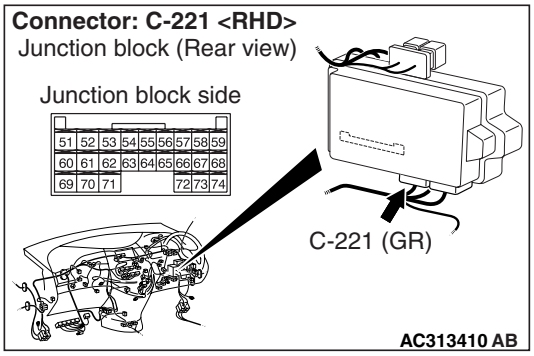

NOTE:

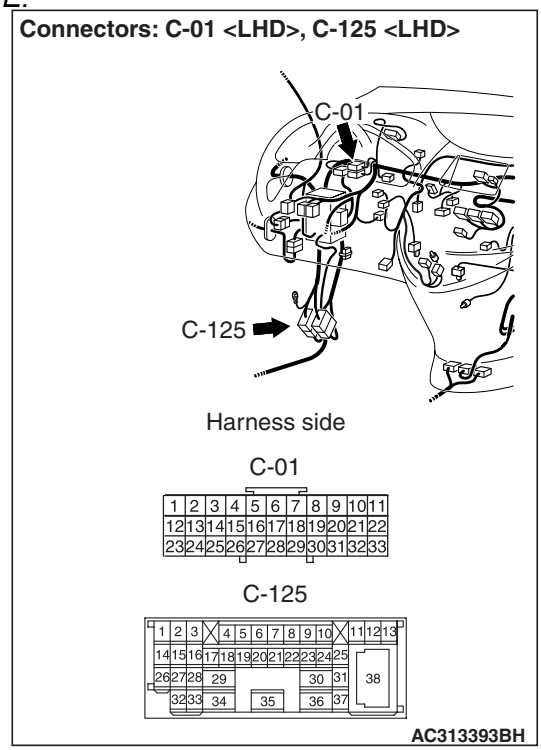

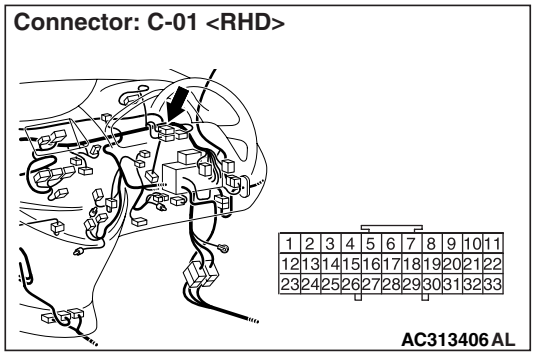

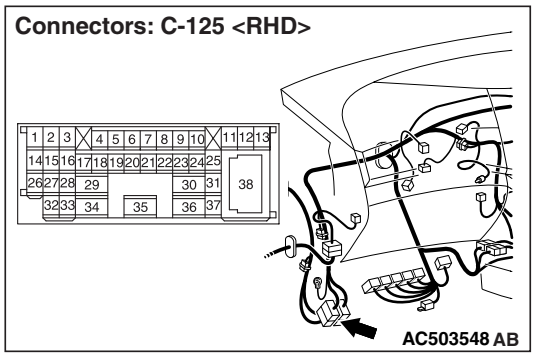

Prior to the wiring harness inspection, check joint connector C-01 and intermediate connector C-125, and repair if necessary.

- Check the communication lines for open circuit.

Q: Is the check result normal?

YES : Go to Step 11.

NO : Repair the wiring harness.

Main Index
Group TOC

Step 11. Check whether the diagnosis code is reset.

Replace the front ECU, and then check that the diagnosis code is not reset.

(1) Replace the front ECU.
(2) Ignition switch: ON
(3) On completion, check that diagnosis code No.03 is not reset.

Q: Is diagnosis code No.03 set?

YES : . Replace the ETACS-ECU.
NO : . The procedure is complete.

Main Index
Group TOC

Diagnosis code No.04 Communication error with sunroof-ECU

⚠ CAUTION

If diagnosis code No.04 is set in the ETACS-ECU, diagnose the CAN bus lines.

Sunroof Motor Assembly and SWS Communication Circuit

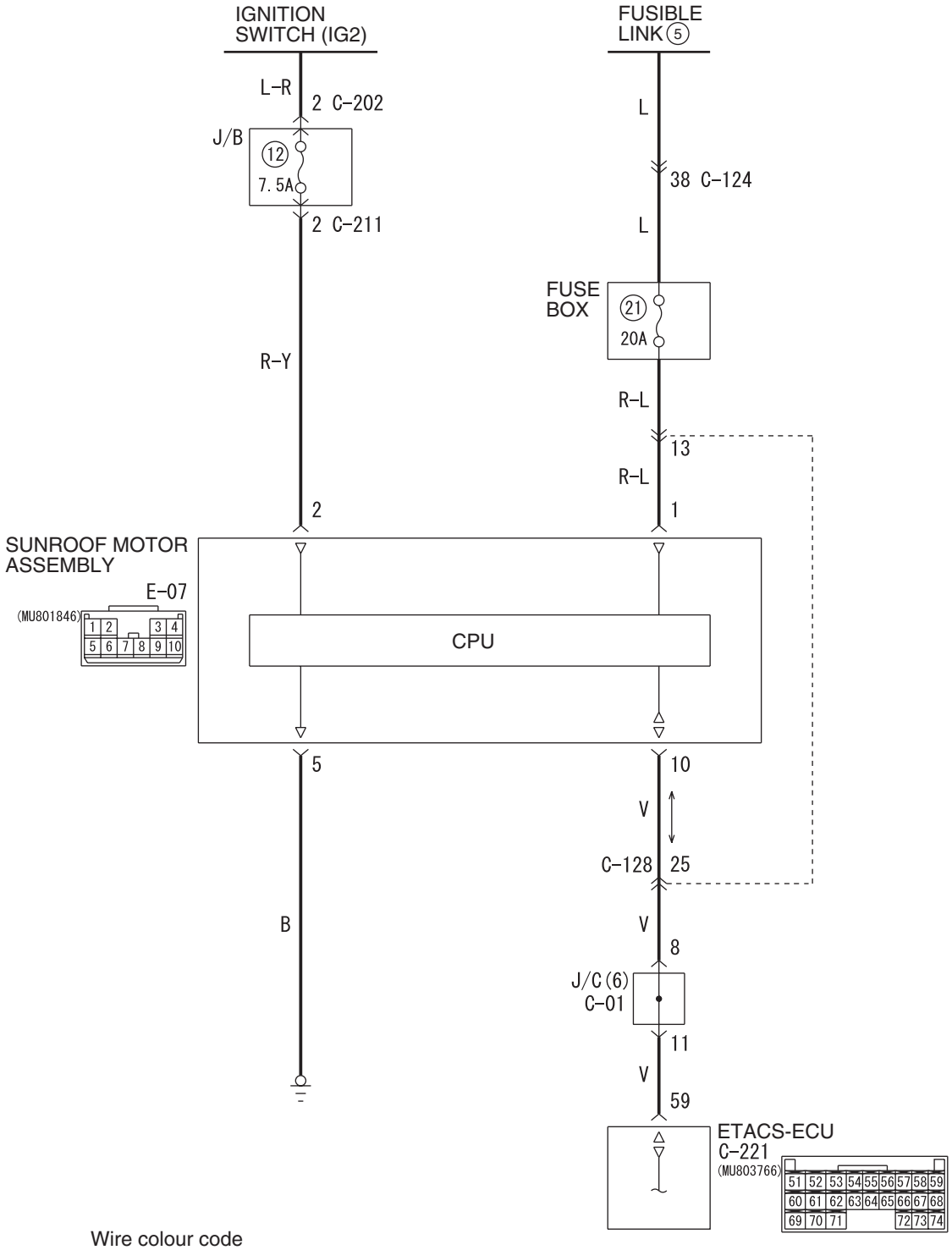

Wire colour code
B : Black LG : Light green G : Green L : Blue W : White Y : Yellow SB : Sky blue
BR : Brown O : Orange GR : Grey R : Red P : Pink V : Violet PU : Purple

W6X54X031A

TROUBLE JUDGMENT

The ETACS-ECU communicates with the sunroof motor assembly (sunroof-ECU) through the SWS communication line. If there is any trouble in that communication, diagnosis code No.04 will be set.

NOTE: For vehicles without sunroof, diagnosis code No.04 does not mean that there is a problem.

COMMENTS ON TROUBLE SYMPTOM

The sunroof motor assembly (sunroof-ECU), the ETACS-ECU, connector(s), or wiring harness between the two may be defective.

POSSIBLE CAUSES

- Malfunction of the sunroof motor assembly (sunroof-ECU)
- Malfunction of the ETACS-ECU
- Damaged harness wires and connectors

DIAGNOSIS PROCEDURE

Step 1. M.U.T.-III CAN bus diagnostics

Use the M.U.T.-III to diagnose the CAN bus lines.

Q: Is the check result normal?

YES : Go to Step 2.

NO : Repair the CAN bus line (Refer to GROUP 54F – Troubleshooting P.54F-13).

Step 2.Check whether the diagnosis code is reset.

Check again if the diagnosis code is set.

(1) Erase the diagnosis code.
(2) Ignition switch: LOCK (OFF) position to ON
(3) On completion, check that the diagnosis code is not reset.

Q: Is the check result normal?

YES : . If a trouble is solved, it is determined that there is an intermittent malfunction such as poor engaged connector(s) or open circuit (Refer to GROUP 00 – How to use troubleshooting/Inspection Service Points P.00-5).

NO : . Go to Step 3.

Step 3. Connector check: E-07 sunroof motor assembly connector

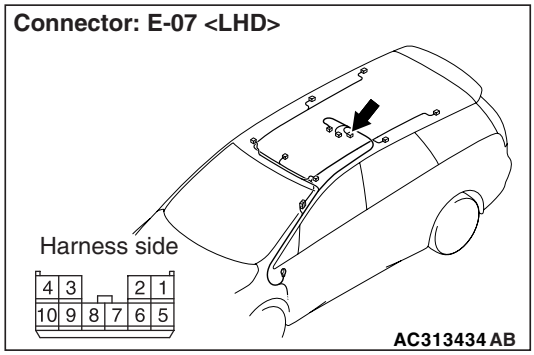

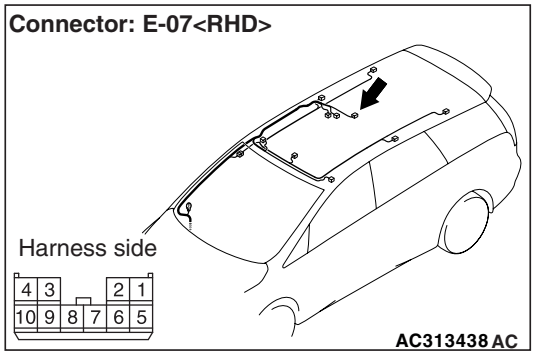

Q: Is the check result normal?

YES : Go to Step 4.

NO : Repair the defective connector.

Main Index
Group TOC

Step 4. Voltage measurement at the E-07 sunroof motor assembly connector.

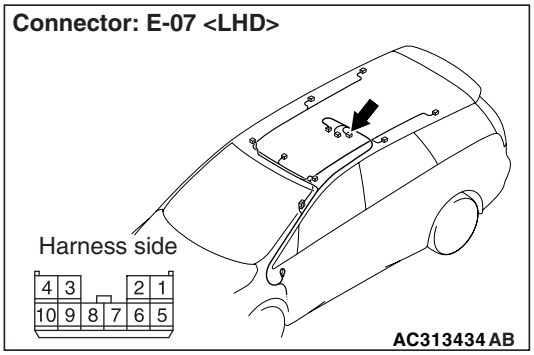

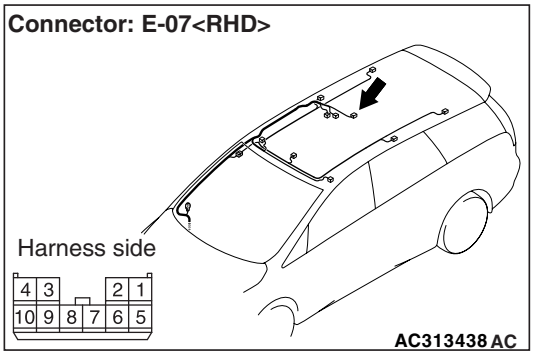

(1) Disconnect the connector, and measure at the wiring harness side.

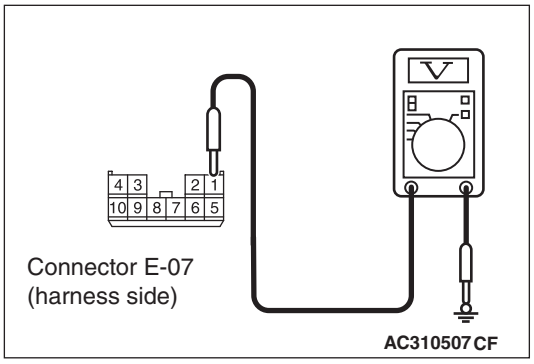

(2) Voltage between E-07 sunroof motor assembly connector terminal No.1 and body earth

OK: System voltage

Q: Is the check result normal?

YES : Go to Step 6.

NO : Go to Step 5.

Step 5. Check the wiring harness between E-07 sunroof motor assembly connector terminal No.1 and fusible link (5).

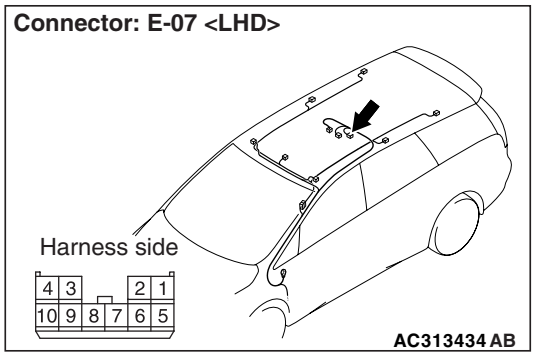

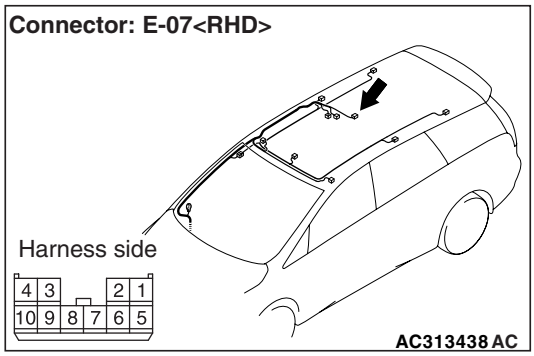

NOTE:

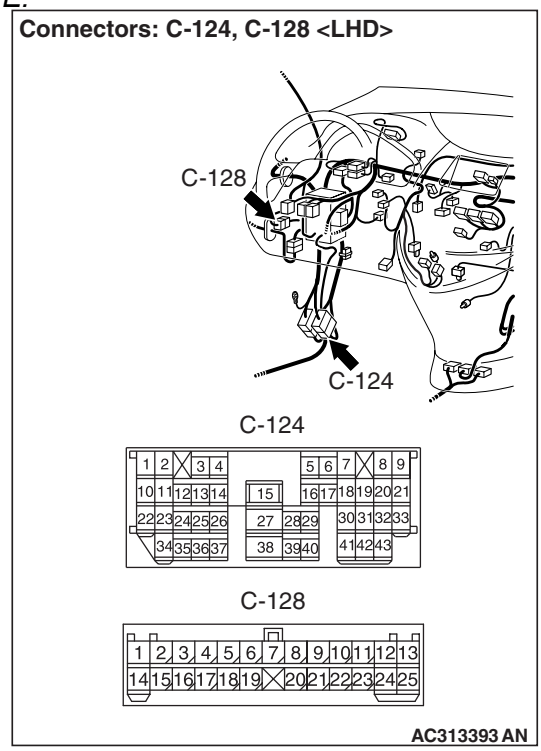

Main Index
Group TOC

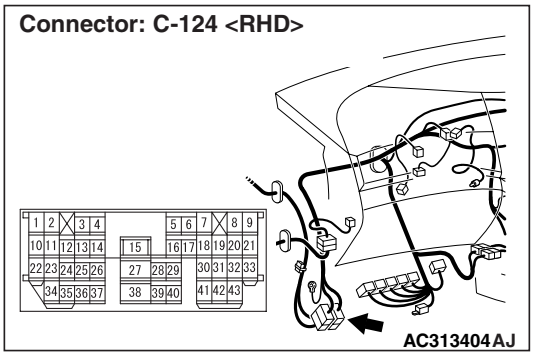

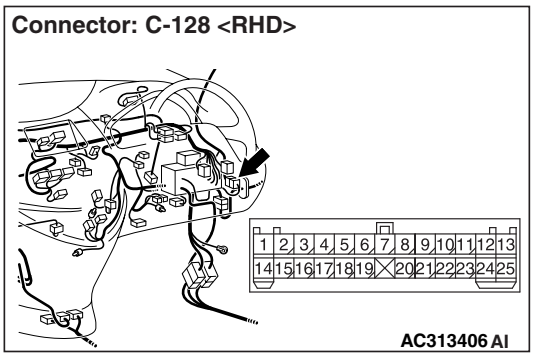

Prior to the wiring harness inspection, check intermediate connectors C-124, C-128, and repair if necessary.

- Check the power supply line for open circuit.

Q: Is the check result normal?

YES : The trouble can be an intermittent malfunction (Refer to GROUP 00 – How to Cope with Intermittent Malfunction P.00-5).

NO : Repair the wiring harness.

Step 6. Voltage measurement at E-07 sunroof motor assembly connector.

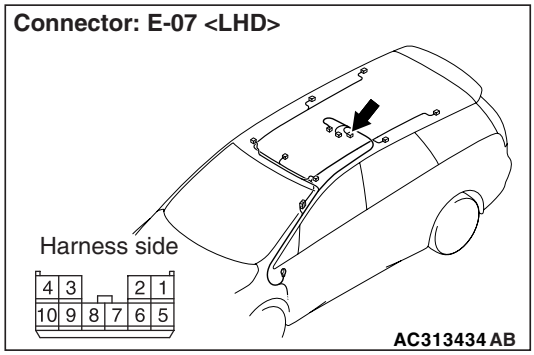

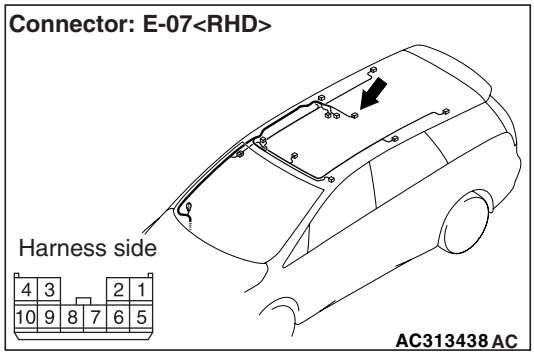

(1) Disconnect the connector, and measure at the wiring harness side.

(2) Turn the ignition switch to the ON position.

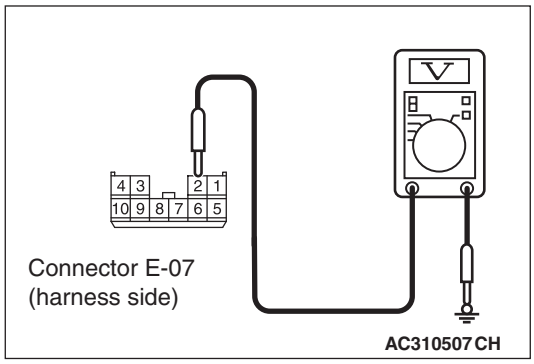

(3) Voltage between E-07 sunroof motor assembly connector terminal No.2 and body earth

OK: System voltage

Q: Is the check result normal?

YES : Go to Step 8.

NO : Go to Step 7.

Main Index
Group TOC

Step 7. Check the wiring harness between E-07 sunroof motor assembly connector terminal No.2 and ignition switch (IG2).

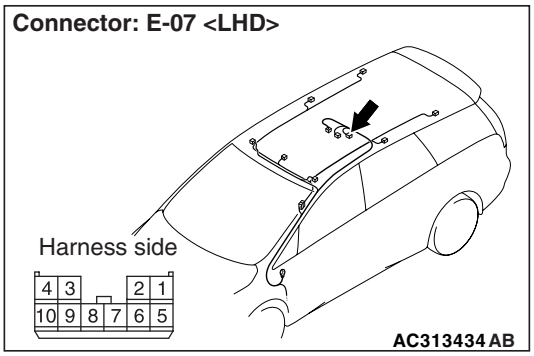

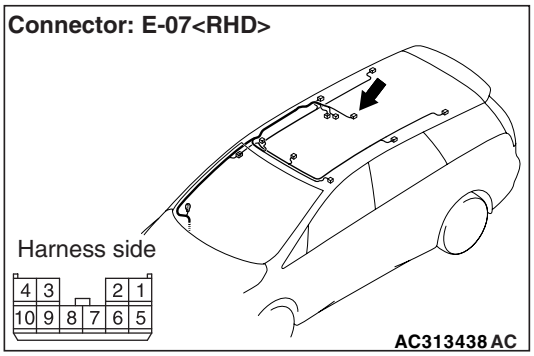

NOTE:

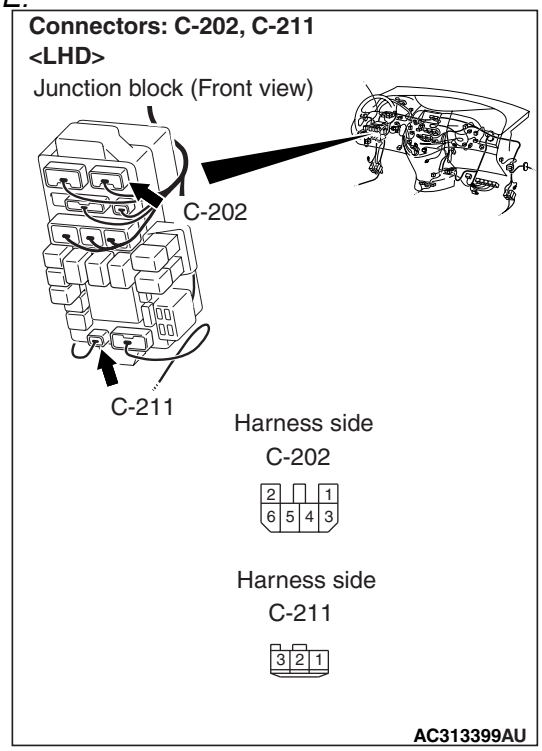

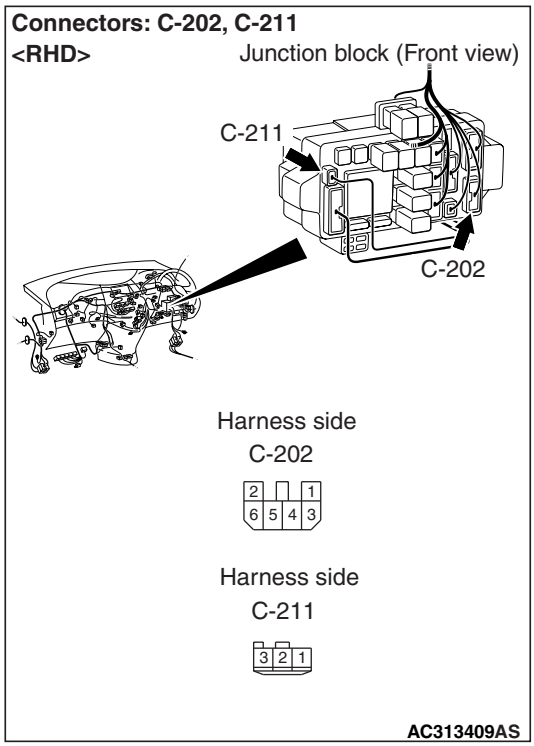

Prior to the wiring harness inspection, check junction block connectors C-202 and C-211, and repair if necessary.

- Check the power supply line to the ignition switch (IG2) for open circuit.

Q: Is the check result normal?

YES : The trouble can be an intermittent malfunction (Refer to GROUP – 00, How to Cope with Intermittent Malfunction P.00-5).

NO : Repair the wiring harness.

Main Index
Group TOC

Step 8. Resistance measurement at the E-07 sunroof motor assembly connector.

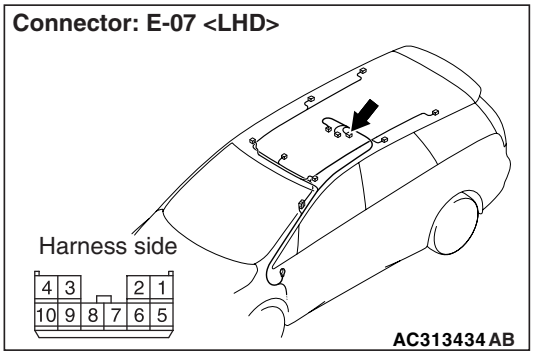

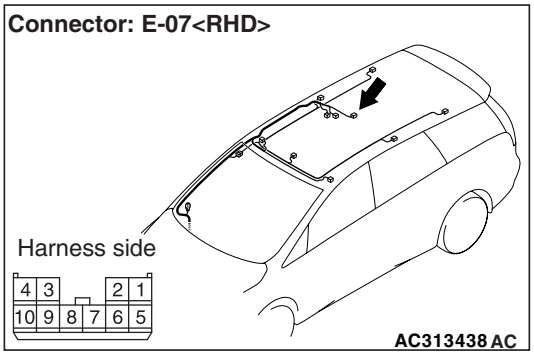

(1) Disconnect the connector, and measure at the wiring harness side.

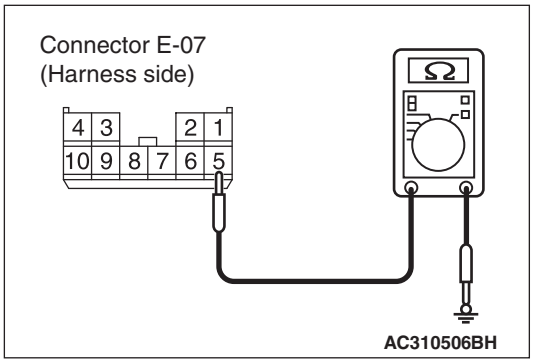

(2) Continuity between E-07 sunroof motor assembly connector terminal No.5 and body earth

OK: 2 Ω or less

Q: Is the check result normal?

YES : Go to Step 10.

NO : Go to Step 9.

Step 9. Check the wiring harness between E-07 sunroof motor assembly connector terminal No.5 and body earth.

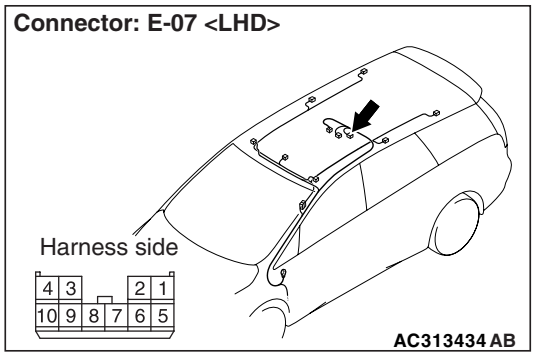

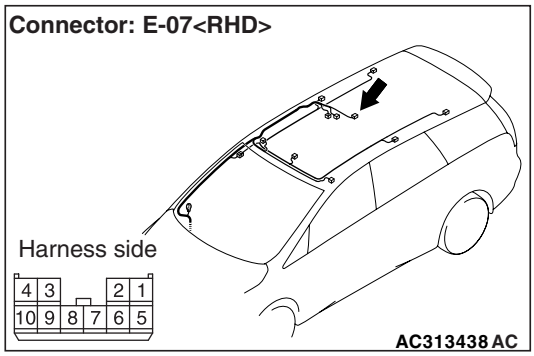

- Check the earth wires for open circuit.

Q: Is the check result normal?

YES : The trouble can be an intermittent malfunction (Refer to GROUP – 00, How to Cope with Intermittent Malfunction P.00-5).

NO : Repair the wiring harness.

Main Index
Group TOC

Step 10. Connector check: C-221 ETACS-ECU connector

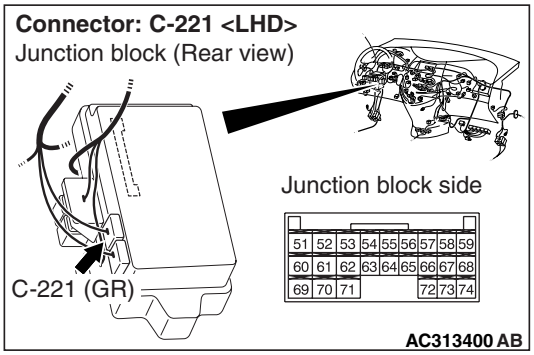

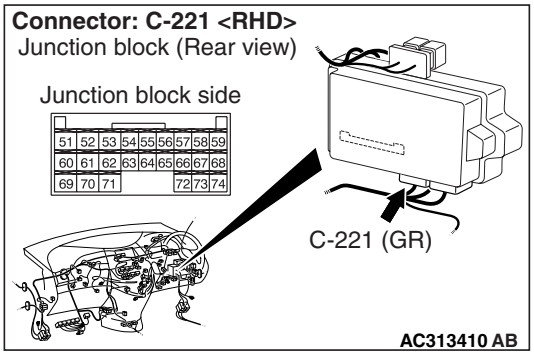

Q: Is the check result normal?

YES : Go to Step 11.

NO : Repair the defective connector.

Step 11. Check the wiring harness between E-07 sunroof motor assembly connector terminal No.10 and C-221 ETACS-ECU connector terminal No.59.

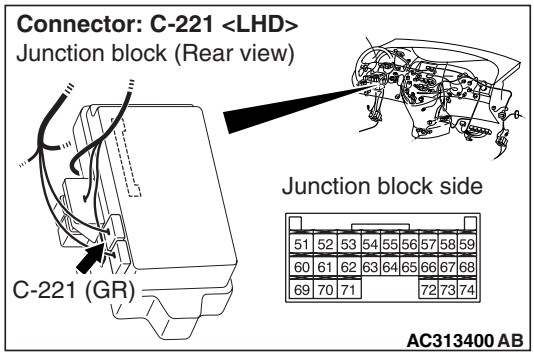

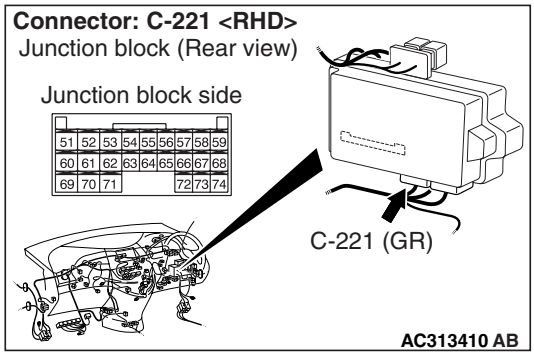

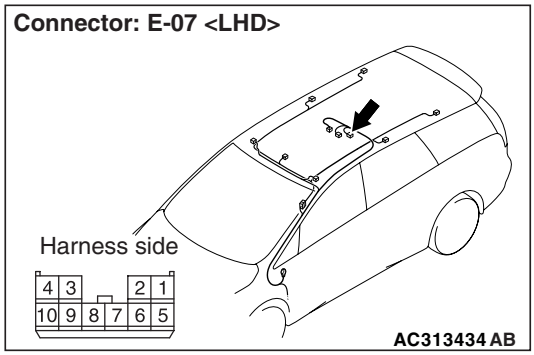

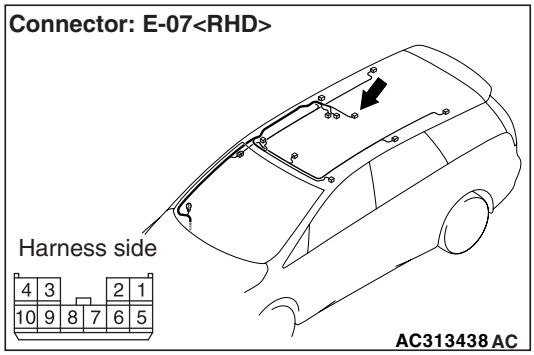

Main Index
Group TOC

NOTE:

Connectors: C-01, C-128 <LHD>

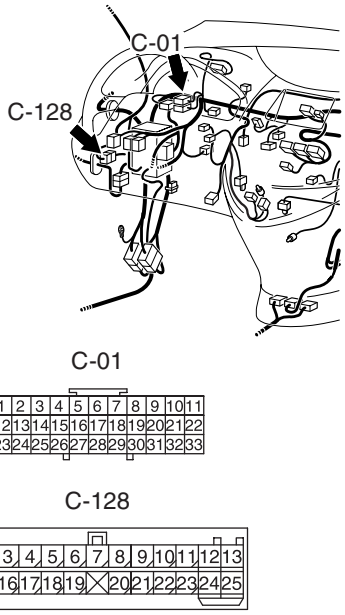

AC313393 AM

Connectors: C-01, C-128 <RHD>

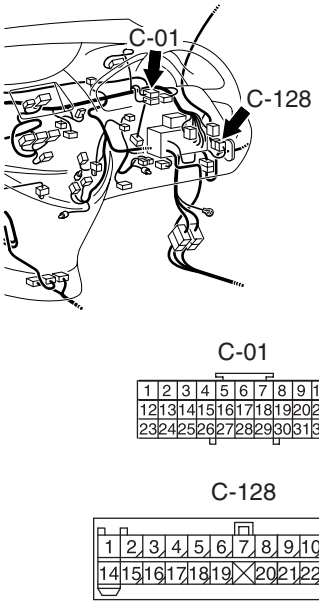

AC313407AI

Prior to the wiring harness inspection, check joint connector C-01 and intermediate connector C-128, and repair if necessary.

- Check the communication lines for open circuit.

Q: Is the check result normal?

YES : Go to Step 12.

NO : Repair the wiring harness.

Step 12. Check whether the diagnosis code is reset.

Replace the sunroof motor assembly (sunroof-ECU), and then check that the diagnosis code is not reset.

(1) Replace the sunroof motor assembly (sunroof-ECU).
(2) Ignition switch: ON
(3) On completion, check that diagnosis code No.04 is not reset.

Q: Is diagnosis code No.04 set?

YES : Replace the ETACS-ECU.

NO : The procedure is complete.

Main Index
Group TOC

Diagnosis code No.10 Bus off

⚠ CAUTION
If diagnosis code No.10 is set in the ETACS-ECU, diagnose the CAN bus lines.

⚠ CAUTION
Whenever the ECU is replaced, ensure that the input and output signal circuits are normal.

TROUBLE JUDGMENT

Diagnosis code No.10 will be stored when the ETACS-ECU ceases CAN communication (bus off) and then resumes the communication by turning the ignition switch to the "LOCK" (OFF) position.

COMMENTS ON TROUBLE SYMPTOM

The wiring harness wire or connectors may have loose, corroded, or damage terminals, or terminals pushed back in the connector, or the SWS communication lines may be defective.

POSSIBLE CAUSES

Damaged harness wires and connectors

DIAGNOSIS PROCEDURE

Step 1. M.U.T.-III CAN bus diagnostics
Use the M.U.T.-III to diagnose the CAN bus lines.

Q: Is the check result normal?
YES : Go to Step 2.
NO : Repair the CAN bus line (Refer to GROUP 54F – Troubleshooting P.54F-13). Repair the CAN bus line and go to Step 3.

Step 2. Check whether the diagnosis code is reset.
Check again if the diagnosis code is set.
(1) Erase the diagnosis code.
(2) Ignition: LOCK (OFF) position to ON
(3) On completion, check that the diagnosis code is not reset.

Q: Is the check result normal?
YES : If a trouble is solved, it is determined that there is an intermittent malfunction such as poor engaged connector(s) or open circuit (Refer to GROUP 00 – How to use troubleshooting/Inspection Service Points P.00-5).
NO : Replace the ETACS-ECU, and then go to Step 3.

Step 3. Check whether the diagnosis code is reset.
Recheck if the diagnosis code is set.
(1) Erase the diagnosis code.
(2) Ignition switch: LOCK (OFF) position to ON
(3) Check if the diagnosis code is set.

Q: Is the check result normal?
YES : The procedure is complete.
NO : Return to Step 1.

Diagnosis code No.11 Engine-A/T-ECU <A/T> or Engine-ECU <M/T> time-out (related to engine)

⚠ CAUTION
If diagnosis code No.11 is set in the ETACS, diagnose the CAN main bus line.

⚠ CAUTION
Whenever the ECU is replaced, ensure that the communication circuit is normal.

TROUBLE JUDGMENT

- The ETACS-ECU receives engine and transmission control signals from the engine-A/T-ECU <A/T> or the engine-ECU <M/T> through the CAN bus lines. If the ECU can not receive the engine control signal at all, diagnosis code No.11 will be set.

Main Index
Group TOC

COMMENTS ON TROUBLE SYMPTOM

Current trouble

- Connector(s) or wiring harness in the CAN bus lines between the ETACS-ECU and the engine-A/T-ECU <A/T> or the engine-ECU <M/T>, the power supply circuits to these ECUs, or the ETACS-ECU itself may be defective.

Past trouble

- If diagnosis code No.11 is set as past trouble, carry out diagnosis with particular emphasis on wiring and connector(s) in the CAN bus lines between the ETACS-ECU and the engine-A/T-ECU <A/T> or the engine-ECU <M/T>, or power supply to the engine-A/T-ECU <A/T> or the engine-ECU <M/T>. For diagnosis procedures, refer to "How to treat past trouble" (Refer to GROUP 00 – How to Use Troubleshooting/Inspection Service Points P.00-5).

NOTE: For a past trouble, you can not find it by the M.U.T.-III CAN bus diagnostics even if there is any failure in CAN bus lines. In this case, refer to GROUP 00, How to Use Troubleshooting/Inspection Service Points P.00-5 and check the CAN bus lines. You can narrow down the possible cause of the trouble by referring to the diagnosis code, which is set regarding the CAN communication-linked ECUs (Refer to GROUP 54F – CAN Bus Line Diagnostic Flow P.54F-7).

POSSIBLE CAUSES

- Malfunction of the engine-A/T-ECU <A/T> or engine-ECU <M/T>
- Malfunction of the ETACS-ECU
- Malfunction of the CAN bus

DIAGNOSIS PROCEDURE

Step 1. M.U.T.-III CAN bus diagnostics

Use the M.U.T.-III to diagnose the CAN bus lines.

Q: Is the check result normal?

YES : Go to Step 2.

NO : Repair the CAN bus line (Refer to GROUP 54F – Troubleshooting P.54F-13). Repair the CAN bus line and go to Step 6.

Step 2. Check for engine control diagnosis code.

Check that the engine control system sets a diagnosis code.

Q: Is the check result normal?

YES : Go to Step 3.

NO : Engine (Refer to GROUP 13A – Troubleshooting P.13A-11).

Step 3. M.U.T.-III diagnosis code

Check if a diagnosis code, which relates to CAN communication-linked systems below, is set.

- Combination meter

U1100: Engine-related time-out diagnosis code

- Multi-display

U1100: Engine-related time-out diagnosis code

Q: Is the check result normal?

YES : Go to Step 5.

NO : Go to Step 4.

Step 4. Check whether the diagnosis code is reset.

Check again if the diagnosis code is set.

(1) Erase the diagnosis code.
(2) Ignition switch: LOCK (OFF) position to ON
(3) On completion, check that the diagnosis code is not reset.

Q: Is the check result normal?

YES : A poor connection, open circuit or other intermittent malfunction is present in the CAN bus lines between the engine-A/T-ECU <A/T> or the engine-ECU <M/T> and the ETACS-ECU (Refer to GROUP 00 – How to Use Troubleshooting/Inspection Service Points P.00-5).

NO : Replace the engine-A/T-ECU, and then go to Step 6.

Main Index
Group TOC

Step 5. Check whether the diagnosis code is reset.

Check again if the diagnosis code is set.
(1) Erase the diagnosis code.
(2) Ignition switch: LOCK (OFF) position to ON
(3) On completion, check that the diagnosis code is not reset.

Q: Is the check result normal?
YES : A poor connection, open circuit or other intermittent malfunction is present in the CAN bus lines between the engine-A/T-ECU <A/T> or the engine-ECU <M/T> and the ETACS-ECU (Refer to GROUP 00 – How to Use Troubleshooting/Inspection Service Points P.00-5).
NO : Replace the ETACS-ECU, and then go to Step 6.

Step 6. Check whether the diagnosis code is reset.

Recheck if the diagnosis code is set.
(1) Erase the diagnosis code.
(2) Ignition switch: LOCK (OFF) position to ON
(3) On completion, check that the diagnosis code is not reset.

Q: Is the check result normal?
YES : The procedure is complete.
NO : Return to Step 1.

Diagnosis code No.12 Engine-A/T-ECU time-out (related to A/T)

⚠ CAUTION
If diagnosis code No.12 is set in the ETACS, diagnose the CAN main bus line.

⚠ CAUTION
Whenever the ECU is replaced, ensure that the communication circuit is normal.

TROUBLE JUDGMENT

- The ETACS-ECU receives engine and transmission control-related signals from the engine-A/T-ECU via the CAN bus lines. If the ECU cannot receive the transmission control signal at all, diagnosis code No.12 will be set.

NOTE: For M/T-vehicles, diagnosis code No.12 does not mean that there is a problem.

COMMENTS ON TROUBLE SYMPTOM

Current trouble

- Connector(s) or wiring harness in the CAN bus lines between the ETACS-ECU and the engine-A/T-ECU, the power supply system to the engine-A/T-ECU <A/T>, or the ETACS-ECU itself may be defective.

Past trouble

- If diagnosis code No.12 is stored as a past trouble, carry out diagnosis with particular emphasis on wiring and connector(s) in the CAN bus line between the ETACS-ECU and the engine-A/T-ECU, and the power supply system to the engine-A/T-ECU <A/T>. For diagnosis procedures, refer to "How to treat past trouble" (Refer to GROUP 00 – How to Use Troubleshooting/Inspection Service Points P.00-5).

NOTE: For a past trouble, you can not find it by the M.U.T.-III CAN bus diagnostics even if there is any failure in CAN bus lines. In this case, refer to GROUP 00, How to Use Troubleshooting/Inspection Service Points P.00-5 and check the CAN bus lines. You can narrow down the possible cause of the trouble by referring to the diagnosis code, which is set regarding the CAN communication-linked ECUs (Refer to GROUP 54F – CAN Bus Line Diagnostic Flow P.54F-7).

POSSIBLE CAUSES

- Malfunction of the engine-A/T-ECU
- Malfunction of the ETACS-ECU
- Malfunction of the CAN bus

Main Index
Group TOC

DIAGNOSTIC PROCEDURE

Step 1. M.U.T.-III CAN bus diagnostics
Use the M.U.T.-III to diagnose the CAN bus lines.

Q: Is the check result normal?
YES : Go to Step 2.
NO : Repair the CAN bus line (Refer to GROUP 54F – Troubleshooting P.54F-13). Repair the CAN bus line and go to Step 6.

Step 2. Check for A/T control-related diagnosis code.
Check if an A/T system diagnosis code is set.

Q: Is the check result normal?
YES : Go to Step 3.
NO : Diagnose the automatic transmission system (Refer to GROUP 23A – Troubleshooting P.23A-17).

Step 3. M.U.T.-III diagnosis code
Check if a diagnosis code, which relates to CAN communication-linked systems below, is set.
- Combination meter

U1101: Engine-related time-out diagnosis code

Q: Is the check result normal?
YES : Go to Step 5.
NO : Go to Step 4.

Step 4. Check whether the diagnosis code is reset.
Check again if the diagnosis code is set.
(1) Erase the diagnosis code.
(2) Ignition switch: LOCK (OFF) position to ON
(3) On completion, check that the diagnosis code is not reset.

Q: Is the check result normal?
YES : A poor connection, open circuit or other intermittent malfunction is present in the CAN bus lines between the engine-A/T-ECU and the ETACS-ECU (Refer to GROUP 00 – How to Use Troubleshooting/Inspection Service Points P.00-5).
NO : Replace the engine-A/T-ECU, and then go to Step 6.

Step 5. Check whether the diagnosis code is reset.
Check again if the diagnosis code is set.
(1) Erase the diagnosis code.
(2) Ignition switch: LOCK (OFF) position to ON
(3) On completion, check that the diagnosis code is not reset.

Q: Is the check result normal?
YES : A poor connection, open circuit or other intermittent malfunction is present in the CAN bus lines between the engine-A/T-ECU and the ETACS-ECU (Refer to GROUP 00 – How to Use Troubleshooting/Inspection Service Points P.00-5).
NO : Replace the ETACS-ECU, and then go to Step 6.

Step 6. Check whether the diagnosis code is reset.
Recheck if the diagnosis code is set.
(1) Erase the diagnosis code.
(2) Ignition switch: LOCK (OFF) position to ON
(3) On completion, check that the diagnosis code is not reset.

Q: Is the check result normal?
YES : The procedure is complete.
NO : Return to Step 1.

Code No.13 A/C-ECU time-out

⚠ CAUTION
If diagnosis code No.13 is set in the ETACS-ECU, diagnose the CAN bus lines.

⚠ CAUTION
Whenever the ECU is replaced, ensure that the input and output signal circuits are normal.

TROUBLE JUDGMENT

The ETACS-ECU receives air conditioner system-related signal from the A/C-ECU. If air conditioner control system-related signal can not be received at all, diagnosis code No.13 will be set.

Main Index
Group TOC

COMMENT ON TROUBLE SYMPTOM

Current trouble

- Connector(s) or wiring harness in the CAN bus lines between the A/C-ECU and the ETACS-ECU, the power supply system to the combination meter, the combination meter itself, or the ETACS-ECU may be defective.

Past trouble

- If diagnosis code No.13 is stored as a past trouble, carry out diagnosis with particular emphasis on wiring and connector(s) in the CAN bus line between the ETACS-ECU and the A/C-ECU, and the power supply system to the A/C-ECU. For diagnosis procedures, refer to "How to treat past trouble" (Refer to GROUP 00 – How to Use Troubleshooting/Inspection Service Points P.00-5).

NOTE: For a past trouble, you can not find it by the M.U.T.-III CAN bus diagnostics even if there is any failure in CAN bus lines. In this case, refer to GROUP 00, How to Use Troubleshooting/Inspection Service Points P.00-5 and check the CAN bus lines. You can narrow down the possible cause of the trouble by referring to the diagnosis code, which is set regarding the CAN communication-linked ECUs (Refer to GROUP 54F – CAN Bus Line Diagnostic Flow P.54F-7).

PROBABLE CAUSES

- Malfunction of the A/C-ECU
- Malfunction of the ETACS-ECU
- Damaged harness wires and connectors

DIAGNOSIS PROCEDURE

STEP 1. M.U.T.-III CAN bus diagnostics

Use the M.U.T.-III to diagnose the CAN bus lines.

Q: Is the check result normal?

YES : Go to Step 2.

NO : Repair the CAN bus line (Refer to GROUP 54F – Troubleshooting P.54F-13). Repair the CAN bus line and go to Step 5.

STEP 2. M.U.T.-III diagnosis code

Check if an A/C-ECU diagnosis code is set.

Q: Is the diagnosis code set?

YES : Diagnose the A/C-ECU (Refer to GROUP 55 – Troubleshooting P.55-8).

NO : Go to Step 3.

STEP 3. Check whether the diagnosis code is reset.

Check again if the diagnosis code is set.

(1) Erase the diagnosis code.
(2) Ignition switch: ON → LOCK (OFF) → ON
(3) On completion, check that the diagnosis code is not reset.

Q: Is the check result normal?

YES : A poor connection, open circuit or other intermittent malfunction is present in the CAN bus lines between the A/C-ECU and the ETACS-ECU (Refer to GROUP 00 – How to Use Troubleshooting/Inspection Service Points P.00-5).

NO : Replace the A/C-ECU, and then go to Step 4.

STEP 4. Check whether the diagnosis code is reset.

Check again if the diagnosis code is set.

(1) Erase the diagnosis code.
(2) Ignition switch: ON → LOCK (OFF) → ON
(3) On completion, check that the diagnosis code is not reset.

Q: Is the check result normal?

YES : A poor connection, open circuit or other intermittent malfunction is present in the CAN bus lines between the A/C-ECU and the ETACS-ECU (Refer to GROUP 00 – How to Use Troubleshooting/Inspection Service Points P.00-5).

NO : Replace the ETACS-ECU, and then go to Step 5.

STEP 5. Check whether the diagnosis code is reset.

Recheck if the diagnosis code is set.

(1) Erase the diagnosis code.
(2) Ignition switch: ON → LOCK (OFF) → ON
(3) On completion, check that the diagnosis code is not reset.

Q: Is the check result normal?

YES : The procedure is complete.

NO : Return to Step 1.

Diagnosis code No.14 Meter time-out

⚠ CAUTION
If diagnosis code No.14 is set in the ETACS-ECU, diagnose the CAN bus lines.

⚠ CAUTION
Whenever the ECU is replaced, ensure that the input and output signal circuits are normal.

TROUBLE JUDGMENT

The ETACS-ECU receives combination meter-related signal from the combination meter. If meter-related signal can not be received at all, diagnosis code No.14 will be set.

COMMENT ON TROUBLE SYMPTOM

Current trouble

- Connector(s) or wiring harness in the CAN bus lines between the combination meter and the ETACS-ECU, the power supply system to the combination meter, the combination meter itself, or the ETACS-ECU may be defective.

Past trouble

- If diagnosis code No.14 is stored as a past trouble, carry out diagnosis with particular emphasis on wiring and connector(s) in the CAN bus line between the combination meter and the ETACS-ECU, and the power supply system to the combination meter. For diagnosis procedures, refer to "How to treat past trouble" (Refer to GROUP 00 – How to Use Troubleshooting/Inspection Service Points P.00-5).

NOTE: For a past trouble, you can not find it by the M.U.T.-III CAN bus diagnostics even if there is any failure in CAN bus lines. In this case, refer to GROUP 00, How to Use Troubleshooting/Inspection Service Points P.00-5 and check the CAN bus lines. You can narrow down the possible cause of the trouble by referring to the diagnosis code, which is set regarding the CAN communication-linked ECUs (Refer to GROUP 54F – CAN Bus Line Diagnostic Flow P.54F-7).

POSSIBLE CAUSES

- Malfunction of the combination meter
- Malfunction of the ETACS-ECU
- Damaged harness wires and connectors

DIAGNOSIS PROCEDURE

Step 1. M.U.T.-III CAN bus diagnostics
Use the M.U.T.-III to diagnose the CAN bus lines.

Q: Is the check result normal?
YES : Go to Step 2.
NO : Repair the CAN bus line (Refer to GROUP 54F – Troubleshooting P.54F-13). Repair the CAN bus line and go to Step 6.

Step 2. M.U.T.-III diagnosis code
Check whether the combination meter-related diagnosis code is set.

Q: Is the diagnosis code set?
YES : Diagnose the combination meter (Refer to GROUP 54A – Troubleshooting P.54A-55).
NO : Go to Step 3.

Step 3. M.U.T.-III diagnosis code
Check if a diagnosis code, which relates to CAN communication-linked systems below, is set.

- Engine

U1108: Combination meter time-out diagnosis code

Q: Is the diagnosis code set?
YES : Go to Step 4.
NO : Go to Step 5.

Step 4. Check whether the diagnosis code is reset.
Check again if the diagnosis code is set.
(1) Erase the diagnosis code.
(2) Ignition switch: LOCK (OFF) position to ON
(3) On completion, check that the diagnosis code is not reset.

Q: Is the check result normal?
YES : A poor connection, open circuit or other intermittent malfunction is present in the CAN bus lines between the combination meter and the ETACS-ECU (Refer to GROUP 00 – How to Use Troubleshooting/Inspection Service Points P.00-5).
NO : Replace the combination meter, and then go to Step 6.

Main Index
Group TOC

Step 5. Check whether the diagnosis code is reset.

Check again if the diagnosis code is set.
(1) Erase the diagnosis code.
(2) Ignition switch: LOCK (OFF) position to ON
(3) On completion, check that the diagnosis code is not reset.

Q: Is the check result normal?
YES : A poor connection, open circuit or other intermittent malfunction is present in the CAN bus lines between the combination meter and the ETACS-ECU (Refer to GROUP 00 – How to Use Troubleshooting/Inspection Service Points P.00-5).
NO : Replace the ETACS-ECU, and then go to Step 6.

Step 6. Check whether the diagnosis code is reset.

Recheck if the diagnosis code is set.
(1) Erase the diagnosis code.
(2) Ignition switch: LOCK (OFF) position to ON
(3) On completion, check that the diagnosis code is not reset.

Q: Is the check result normal?
YES : The procedure is complete.
NO : Return to Step 1.

Diagnosis code No.21 Meter failure information

⚠ CAUTION
If diagnosis code No.21 is set in the ETACS-ECU, diagnose the CAN bus lines.

⚠ CAUTION
Whenever the ECU is replaced, ensure that the input and output signal circuits are normal.

TROUBLE JUDGMENT

The ETACS-ECU receives vehicle speed-related signal from the combination meter via the CAN bus lines. If failure information is sent to the vehicle speed-related signal, diagnosis code No.21 will be set.

COMMENT ON TROUBLE SYMPTOM

Current trouble

- Connector(s) or wiring harness in the CAN bus lines, the engine-A/T-ECU <A/T> or the engine-ECU <M/T>, the combination meter, the ETACS-ECU or the output shaft speed sensor may be defective.

Past trouble

- If diagnosis code 21 is stored as a past trouble, carry out diagnosis with particular emphasis on wiring and connector(s) between the engine-A/T-ECU <A/T> or engine-ECU <M/T> and the output shaft speed sensor. For diagnosis procedures, refer to "How to treat past trouble" (Refer to GROUP 00 – How to Use Troubleshooting/Inspection Service Points P.00-5).

POSSIBLE CAUSES

- Malfunction of the engine-A/T-ECU <A/T> or engine-ECU <M/T>
- Defective combination meter
- Malfunction of the ETACS-ECU

DIAGNOSIS PROCEDURE

Step 1. M.U.T.-III CAN bus diagnostics

Use the M.U.T.-III to diagnose the CAN bus lines.

Q: Is the check result normal?
YES : Go to Step 2.
NO : Repair the CAN bus line (Refer to GROUP 54F – Troubleshooting P.54F-13). Repair the CAN bus line and go to Step 6.

Step 2. M.U.T.-III diagnosis code

Check whether the combination meter-related diagnosis code is set.

Q: Is the diagnosis code set?
YES : Diagnose the combination meter (Refer to GROUP 54A – Troubleshooting P.54A-73).
NO : Go to Step 3.

Main Index
Group TOC

Step 3. M.U.T.-III diagnosis code

Check if a diagnosis code, which relates to CAN communication-linked systems below, is set.

- Multi-centre display

U1113: Combination meter failure information diagnosis code

Q: Is the diagnosis code set?

YES : Go to Step 4.
NO : Go to Step 5.

Step 4. Check whether the diagnosis code is reset.

Check again if the diagnosis code is set.
(1) Erase the diagnosis code.
(2) Ignition switch: LOCK (OFF) position to ON
(3) On completion, check that the diagnosis code is not reset.

Q: Is the check result normal?

YES : A poor connection, open circuit or other intermittent malfunction is present in the CAN bus lines between the engine-A/T-ECU <A/T> or the engine-ECU <M/T> and the output shaft speed sensor (Refer to GROUP 00 – How to Use Troubleshooting/Inspection Service Points P.00-5).
NO : Replace the combination meter, and then go to Step 6.

Step 5. Check whether the diagnosis code is reset.

Recheck if the diagnosis code is set.
(1) Erase the diagnosis code.
(2) Ignition switch: LOCK (OFF) position to ON
(3) On completion, check that the diagnosis code is not reset.

Q: Is the check result normal?

YES : A poor connection, open circuit or other intermittent malfunction is present in the CAN bus lines between the engine-A/T-ECU <A/T> or the engine-ECU <M/T> and the output shaft speed sensor (Refer to GROUP 00 – How to Use Troubleshooting/Inspection Service Points P.00-5).
NO : Replace the ETACS-ECU, and then go to Step 6.

Step 6. Check whether the diagnosis code is reset.

Recheck if the diagnosis code is set.
(1) Erase the diagnosis code.
(2) Ignition switch: LOCK (OFF) position to ON
(3) On completion, check that the diagnosis code is not reset.

Q: Is the check result normal?

YES : The procedure is complete.
NO : Return to Step 1.

Main Index
Group TOC

TROUBLE SYMPTOM CHART

M1549000801825

Symptom	Inspection procedure number	Reference page
Communication with the M.U.T.-III is not possible.	A-1	P.54B-67
When the ignition switch is at the LOCK (OFF) position, the functions do not work normally.	A-2	P.54B-71
Check the battery power supply circuit to the ETACS-ECU.		

<FUNCTION SYSTEM>

Symptom		Inspection procedure number	Reference page
Alarm Function	Lamp reminder buzzer function does not work normally.	B-1	P.54B-76
	Seat belt warning buzzer function does not work normally. <Vehicles for GCC>	B-2	P.54B-78
	Seat belt warning buzzer function does not work normally. <Vehicles for Australia and New Zealand>		P.54B-79
	Door-ajar warning buzzer function does not work normally.	B-3	P.54B-81
	Turn-signal lamp operation sound function does not work normally.	B-4	P.54B-83
	Ignition key reminder buzzer function does not work. <Vehicles for GCC only>	B-5	P.54B-85
	The speed alarm buzzer does not work. <Vehicles for GCC only>	B-6	P.54B-86

Main Index
Group TOC

Symptom		Inspection procedure number	Reference page
Central door locking	Central door locking system does not work.	C-1	P.54B-87
	The central door locking system does not function by using the driver's door lock switch.	C-2	P.54B-90
	The central door locking system does not function by using the passenger's door key cylinder.	C-3	P.54B-91
	The central door locking system does not function by using the tailgate key cylinder.	C-4	P.54B-93
	The ignition key reminder function does not work normally <Vehicles with keyless entry system>	C-5	P.54B-94
	A door can not be locked or unlocked by the central door locking system. <LH drive vehicles>	C-6	P.54B-95
	A door can not be locked or unlocked by the central door locking system. <RH drive vehicles>		P.54B-101
	The tailgate cannot be opened or closed.	C-7	P.54B-107
Power window	Power windows do not work at all.	D-1	P.54B-111
	Driver's power window does not work by means of the power window main switch. <LH drive vehicles>	D-2	P.54B-121
	Driver's power window does not work by means of the power window main switch. <RH drive vehicles>		P.54B-123
	Relevant power window(s) do not work by means of the front and rear power window sub switches.	D-3	P.54B-125
	Passenger's and/or rear power window(s) do not work by means of the power window main switch.	D-4	P.54B-142
	The window glass lowers automatically while it is rising.	D-5	P.54B-145
	The power window timer function does not work normally. <Vehicles for Australia and New Zealand>	D-6	P.54B-146
	The power window timer function does not work normally. <Except vehicles for Australia and New Zealand>		P.54B-147

Main Index
Group TOC

Symptom		Inspection procedure number	Reference page
Keyless entry system	Keyless entry system does not work.	E-1	P.54B-148
	Keyless entry hazard lamp answerback function or the room lamp answerback function does not work normally.	E-2	P.54B-150
	Encrypted code cannot be registered.	E-3	P.54B-151
	The timer lock function does not work after the doors have been unlocked by the keyless entry system.	E-4	P.54B-152
	Multimode keyless entry system function does not work at all.	E-5	P.54B-153
Sunroof	The sunroof does not work at all.	F-1	P.54B-154
	Any of the sunroof switch positions is defective.	F-2	P.54B-160
	Sunroof timer function does not work normally. <Vehicles for Australia and New Zealand>	F-3	P.54B-163
	Sunroof timer function does not work normally. <Except vehicles for Australia and New Zealand>		P.54B-167
	The sunroof inhibition function does not work normally (The sunroof operation lock warning buzzer does not sound).	F-4	P.54B-172
	Sunroof anti-trap function does not work normally.	F-5	P.54B-177
Windshield wiper and washer	The windshield wipers do not work at all.	G-1	P.54B-178
	The windshield wipers does not work when the wiper switch is at "INT", "WASHER" or "MIST" position. However, the wipers work at low speed when the switch is at "LO" and "HI" position.	G-2	P.54B-183
	The windshield wipers do not stop at the specified park position.	G-3	P.54B-184
	The windshield wipers do not work normally.	G-4	P.54B-188
	The intermittent wiper interval can not be adjusted by operating the windshield intermittent wiper volume control.	G-5	P.54B-191
	The intermittent wiper interval is not changed according to the vehicle speed.	G-6	P.54B-192
	The windshield washer does not work.	G-7	P.54B-194

Main Index
Group TOC

Symptom		Inspection procedure number	Reference page
Rear wiper and washer	The rear wiper does not work at all.	H-1	P.54B-198
	The rear wiper does not stop at the specified park position.	H-2	P.54B-202
	When the selector lever is moved to "R" position during the rear wiper operation, the rear wiper does not operate at the continuous mode. <A/T>	H-3	P.54B-206
	When the shift lever is moved to "R" position during the rear wiper operation, the rear wiper does not operate at the continuous mode. <M/T>		P.54B-208
	The rear washer does not work.	H-4	P.54B-209
Electric retractable remote controlled door mirror	Electric retractable remote controlled door mirror does not work at all.	I-1	P.54B-213
	Left or right side electric retractable remote controlled door mirror does not work at all.	I-2	P.54B-217
	Electric retractable remote controlled door mirror timer function does not at all.	I-3	P.54B-223
	Vehicle speed-dependent unfolding function does not work normally.	I-4	P.54B-224
Ignition key cylinder illumination lamp	The ignition key cylinder illumination lamp does not illuminate/extinguish normally.	J-1	P.54B-226
Seat belt warning lamp	The seat belt warning lamp does not flash normally. <Vehicles for GCC>	K-1	P.54B-229
	The seat belt warning lamp does not flash normally. <Vehicles for Australia and New Zealand>		P.54B-231
Headlamp and tail lamp	The tail/stop lamps do not illuminate normally.	L-1	P.54B-233
	The low-beam headlamps do not illuminate normally.	L-2	P.54B-235
	The high-beam headlamps do not illuminate normally.	L-3	P.54B-237
	The high-beam and low-beam headlamps do not illuminate when the passing switch is operated.	L-4	P.54B-238
	The headlamp automatic-shutdown function does not work normally.	L-5	P.54B-239
	Any of tail/stop lamps, position lamps or licence plate lamp does not illuminate.	L-6	P.54B-241
	The headlamp(s) do not illuminate.	L-7	P.54B-248
	The high-beam indicator lamp does not illuminate.	L-8	P.54B-253

Main Index
Group TOC

Symptom		Inspection procedure number	Reference page
Flasher timer	The turn-signal lamps do not illuminate.	M-1	P.54B-254
	The hazard warning lamps do not illuminate.	M-2	P.54B-257
	Any of the turn-signal lamps does not illuminate.	M-3	P.54B-259
	The turn-signal indicator lamp does not illuminate.	M-4	P.54B-273
Fog lamp	The front fog lamps do not illuminate normally.	N-1	P.54B-274
	Any of the front fog lamps does not illuminate normally.	N-2	P.54B-278
	The front fog lamps indicator does not illuminate normally.	N-3	P.54B-281
Interior lamp	The interior lamps (room ramp, rear personal lamps, door lamps, luggage compartment lamp, key illumination lamp) does not illuminate or extinguish normally.	O-1	P.54B-282
	The room lamp does not illuminate normally.	O-2	P.54B-288
	The rear personal lamp does not illuminate normally.	O-3	P.54B-294
	The luggage compartment lamp does not illuminate normally.	O-4	P.54B-303
	The doors lamp does not illuminate normally.	O-5	P.54B-308
	Interior lamp automatic shutoff function does not work normally. <Vehicles with keyless entry system>	O-6	P.54B-315
	The door-ajar warning lamp does not illuminate/extinguish normally.	O-7	P.54B-317

Main Index
Group TOC

CHECK TROUBLE BY USING THE INPUT SIGNAL CHECK

M1549024200824

<Data list, function diagnosis or pulse check>
If a problem is found in the Service Data inspection, observe the table below.

Symptom		Inspection procedure number	Reference page
The ignition switch (ACC) signal is not received.		P-1	P.54B-319
The ignition switch (IG1) signal is not received.		P-2	P.54B-322
The back-up lamp switch signal is not received. <M/T>		P-3	P.54B-325
The front fog lamp switch signal is not received.		P-4	P.54B-329
The driver's door switch signal is not received. <LH drive vehicles>		P-5	P.54B-333
The driver's door switch signal is not received. <RH drive vehicles>			P.54B-335
Column switch (lighting and turn-signal lamp switch)	The tail lamp switch signal is not received.	P-6	P.54B-337
	The headlamp switch signal is not received.		
	The dimmer switch signal is not received.		
	The passing switch signal is not received.		
	The turn-signal lamp switch (LH) signal is not received.		
	The turn-signal lamp switch (RH) signal is not received.		
Column switch (windshield wiper/washer and rear wiper washer switch)	The windshield mist wiper switch signal is not received.	P-7	P.54B-339
	The windshield intermittent wiper switch signal is not received.		
	The windshield low-speed wiper switch signal is not received.		
	The windshield high-speed wiper switch signal is not received.		
	The windshield washer switch signal is not received.		
	The rear wiper switch signal is not received.		
	The rear washer switch signal is not received.		
	The windshield intermittent wiper volume signal is not received.	P-8	P.54B-341
When the sunroof switch is operated, the switch signals are not received.		P-9	P.54B-344
The key reminder switch signal is not received.		P-10	P.54B-350
The hazard warning lamp switch signal is not received.		P-11	P.54B-354
All the door switch signals are not received.		P-12	P.54B-358

Main Index
Group TOC

Symptom	Inspection procedure number	Reference page
The driver's door lock actuator switch signal is not received. <LH drive vehicles>	P-13	P.54B-364
The driver's door lock actuator switch signal is not received. <RH drive vehicles>		P.54B-367
The passenger’s door key switch signal is not detected. <LH drive vehicles>	P-14	P.54B-370
The passenger’s door key switch signal is not detected. <RH drive vehicles>		P.54B-373
The tailgate key switch signal is not detected.	P-15	P.54B-376
The tailgate lock release handle signal is not received.	P-16	P.54B-380
The driver's seat belt switch signal is not received <LH drive vehicles>	P-17	P.54B-384
The driver's seat belt switch signal is not received <RH drive vehicles>		P.54B-387
The front passenger’s seat belt switch signal is not received. <Vehicles for Australia and New Zealand>	P-18	P.54B-390
Signal is not received from the electric remote controlled mirror switch (folding/unfolding switch).	P-19	P.54B-393
The interior lamp "all on" or "all off" switch signal is not sent to the ETACS-ECU.	P-20	P.54B-397
Each switch signal of the keyless entry transmitter is not received.	P-21	P.54B-403
The interior lamp loaded signal is not detected.	P-22	P.54B-404
The vehicle speed signal is not received.	P-23	P.54B-408

Main Index
Group TOC

OPERATION AND FUNCTION QUICK-REFERENCE TABLE FOR INPUT SIGNAL INSPECTION PROCEDURES

M1549020300421

If troubles have occurred in the functions which use the SWS simultaneously, observe the table below to check input signals.

(This table shows only the input signals which will cause troubles in at least two functions simultaneously).

Function	P-1	P-2	P-5	P-6	P-7	P-10	P-11	P-12	P-13	P-21	P-22	P-23
Lamp reminder function	–	×	×	×	–	–	–	–	–	–	–	–
Seat belt warning buzzer function	×	–	–	–	–	–	–	–	–	–	–	×
Door-ajar warning buzzer function	×	×	–	–	–	–	–	×	–	–	–	×
Turn-signal lamp operation sound function	–	×	–	–	–	–	×	–	–	–	–	–
Control of central door locking	–	–	–	–	–	–	–	–	×	–	–	–
Power window control	–	×	–	–	–	–	–	–	–	–	–	–
Keyless entry system	–	–	×	–	–	×	×	×	–	×	–	–
Keyless entry hazard warning lamp answerback	–	–	–	–	–	×	×	–	–	×	–	–
Multi-mode keyless entry system	–	–	–	–	–	–	–	–	–	×	–	–
Sunroof control	×	–	×	–	–	–	–	–	–	–	–	–
Control of windshield wiper washer	×	–	–	–	×	–	–	–	–	–	–	×
Rear wiper washer control	×	–	–	–	×	–	–	–	–	–	–	–
Electric retractable remote controlled door mirror	×	–	×	–	–	–	–	–	–	–	–	–
Ignition key cylinder illumination lamp function	–	×	×	–	–	×	–	–	–	–	–	–
Seat belt indicator lamp	–	×	–	–	–	–	–	–	–	–	–	×
Headlamp control	–	×	–	×	–	–	–	–	–	–	–	–
Tail lamp control	–	×	–	×	–	–	–	–	–	–	–	–
Headlamp automatic-shutdown function	–	×	×	×	–	–	–	–	–	–	–	–
Front fog lamp control	–	–	–	×	–	–	–	–	–	–	–	–

Main Index
Group TOC

Function	P-1	P-2	P-5	P-6	P-7	P-10	P-11	P-12	P-13	P-21	P-22	P-23
Front fog lamp control	–	–	–	×	–	–	–	–	–	–	–	–
Turn-signal lamp control	–	×	–	×	–	–	×	–	–	–	–	–
Interior lamp control	–	×	×	–	–	×	×	×	×	–	×	–
Interior lamp automatic-shutdown function	×	×	×	–	–	–	–	×	–	–	×	–
Door-ajar warning lamp	–	–	×	–	–	–	×	×	–	–	–	–

Main Index
Group TOC

SYMPTOM PROCEDURES

INSPECTION PROCEDURE A-1: Communication with the M.U.T.-III is not possible

⚠ CAUTION
Whenever the ECU is replaced, ensure that the power supply circuit, the earthing circuit and the communication circuit are normal.

MUT-III Communication and ETACS-ECU Earth Circuit

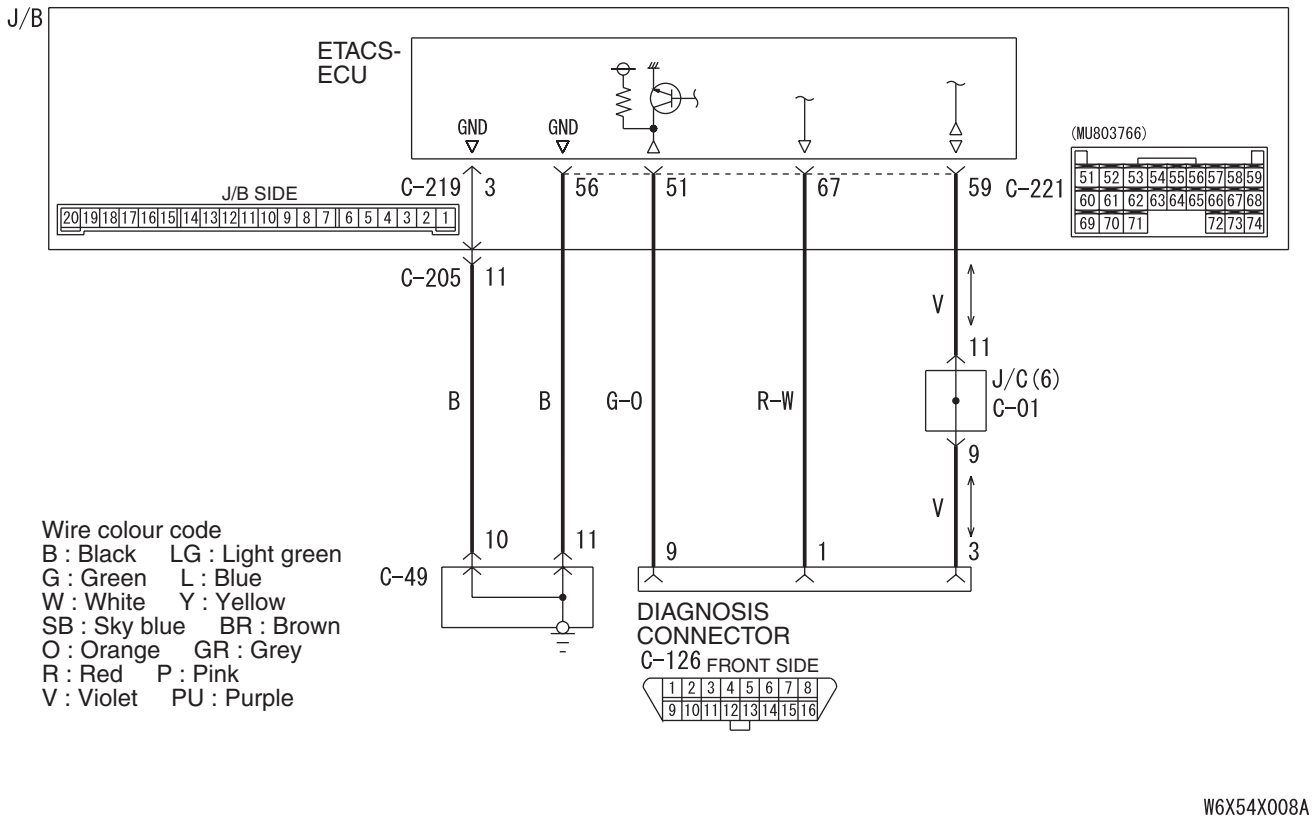

COMMENTS ON TROUBLE SYMPTOM

It is suspected that the power supply circuit to the ETACS-ECU is defective, or the wiring harness between the diagnosis connector and the ETACS-ECU or their connector(s) is damaged.

NOTE: If the wiring harness between the ETACS-ECU and body earth is defective, also check C-219 ETACS-ECU connector terminal No.3, and repair if necessary.

POSSIBLE CAUSES

- Malfunction of the ETACS-ECU
- Damaged harness wires and connectors

DIAGNOSTIC PROCEDURE

Step 1. Check that the M.U.T.-III communicates with the other systems.

Use the M.U.T.-III to confirm that it communicates with the engine-ECU.

Q: Is the check result normal?

YES : Go to Step 2.
NO : Diagnose the system, which cannot communicate with the M.U.T.-III.

Main Index
Group TOC

Step 2. Check that the M.U.T.-III can communicate with the system.

When the ignition switch is turned ON, check if the M.U.T.-III can communicate with the system.

Q: Is the check result normal?

YES : Refer to inspection procedure A-2 "Check the ETACS-ECU battery power supply circuit P.54B-71."

NO : Go to Step 3.

Step 3. Connector check: C-221 ETACS-ECU connector

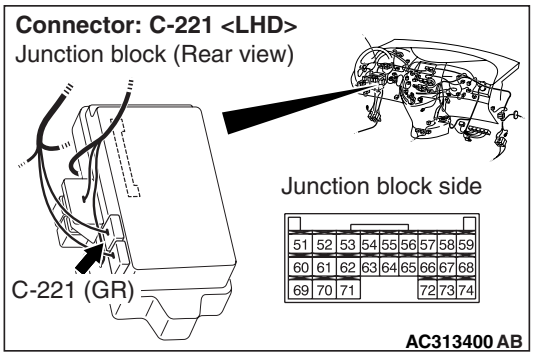

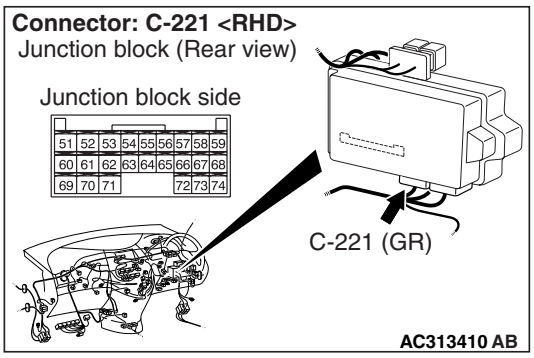

Q: Is the check result normal?

YES : Go to Step 4.

NO : Repair the defective connector.

Step 4. Resistance measurement at the C-221 ETACS-ECU connector.

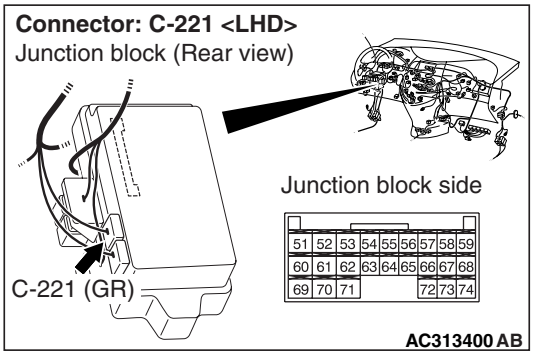

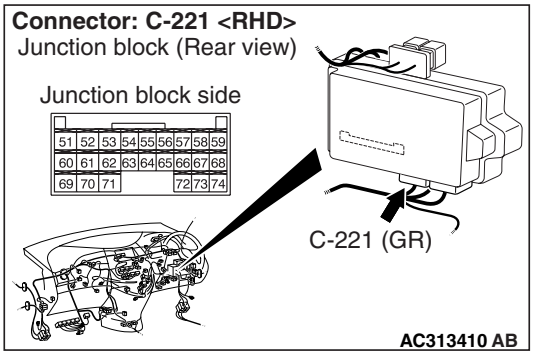

(1) Disconnect the connector, and measure at the junction block side.

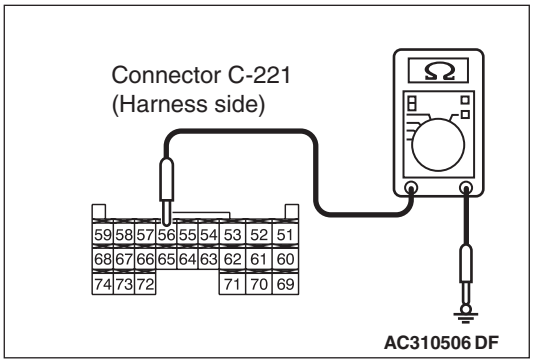

(2) Resistance between C-221 ETACS-ECU connector terminal No.56 and body earth

OK: 2 Ω or less

Q: Is the check result normal?

YES : Go to Step 7.

NO : Go to Step 5.

Main Index
Group TOC

Step 5. Connector check: C-49 earth connector

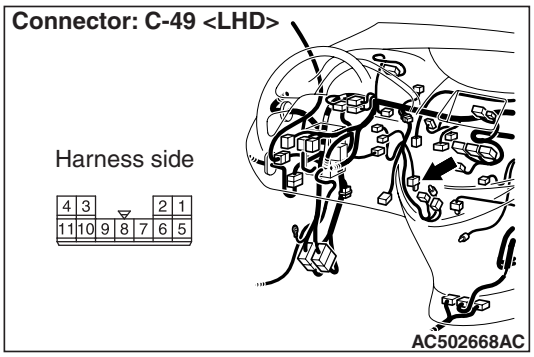

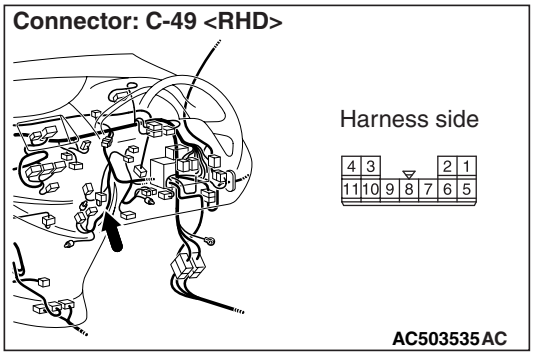

Q: Is the check result normal?
YES : Go to Step 6.
NO : Repair the connector.

Step 6. Check the wiring harness between C-221 ETACS-ECU connector terminal No.56 and C-49 earth connector terminal No.11.

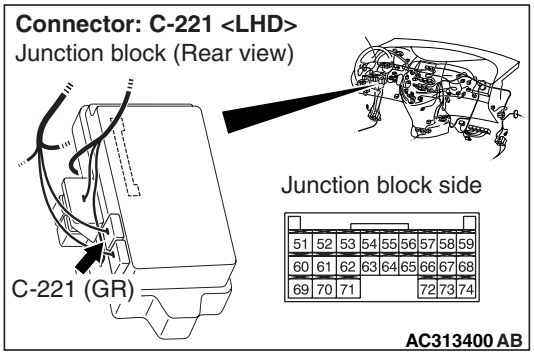

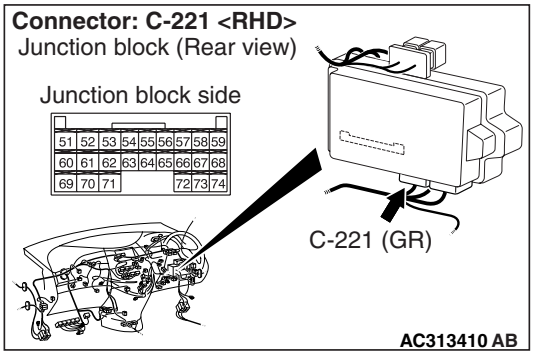

- Check the earth wires for open circuit.

Q: Is the check result normal?
YES : The trouble can be an intermittent malfunction (Refer to GROUP 00 – How to Cope with Intermittent Malfunction P.00-5).
NO : Repair the wiring harness.

Step 7. Connector check: C-126 diagnosis connector

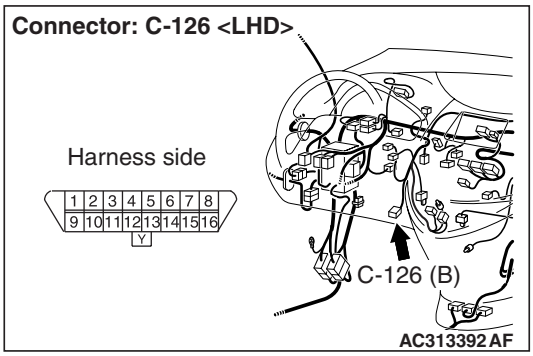

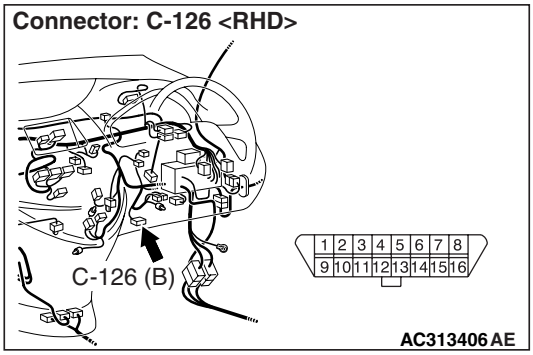

Q: Is the check result normal?
YES : Go to Step 8.
NO : Repair the defective connector.

Main Index
Group TOC

Step 8. Check the wiring harness from C-221 ETACS-ECU connector terminal Nos. 51 and 67 to C-126 diagnosis connector terminal Nos. 9 and 1.

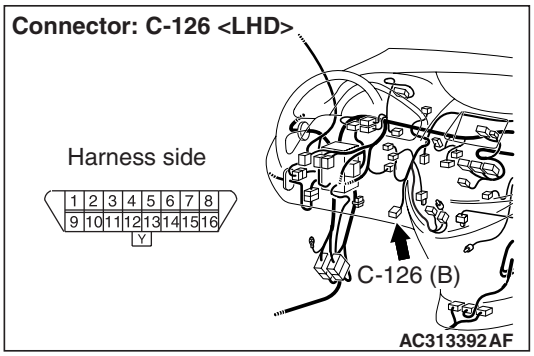

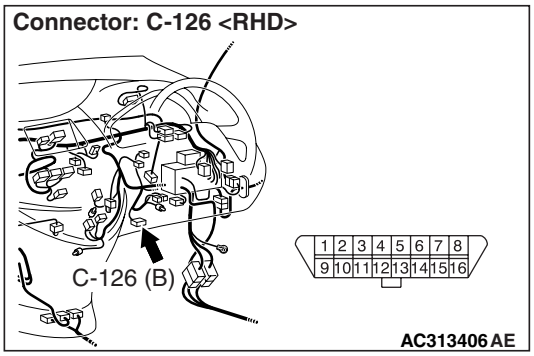

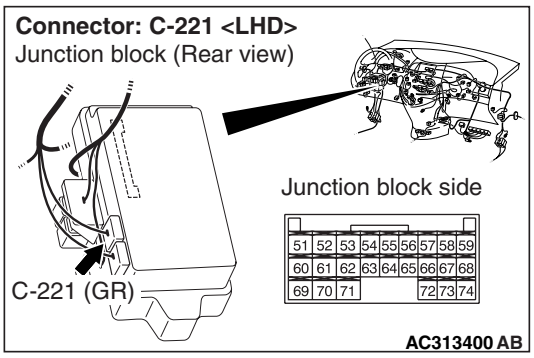

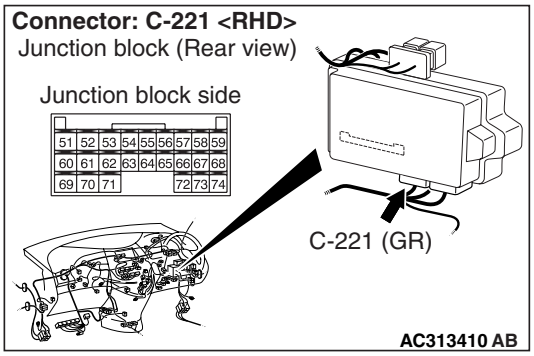

- Check the communication lines for open circuit.

Q: Is the check result normal?

YES : . Go to Step 9.

NO : . Repair the wiring harness.

Step 9. Retest the system.

Check whether the communication with the M.U.T.-III is possible.

Q: Is the check result normal?

YES : The trouble can be an intermittent malfunction (Refer to GROUP 00 – How to Cope with Intermittent Malfunction P.00-5).

NO : Replace the ETACS-ECU.

INSPECTION PROCEDURE A-2: When the ignition switch is at the LOCK (OFF) position, the functions do not work normally. Check the battery power supply circuit to the ETACS-ECU.

⚠ CAUTION
Whenever the ECU is replaced, ensure that the power supply circuit and the earthing circuit are normal.

ETACS-ECS Power Supply Circuit

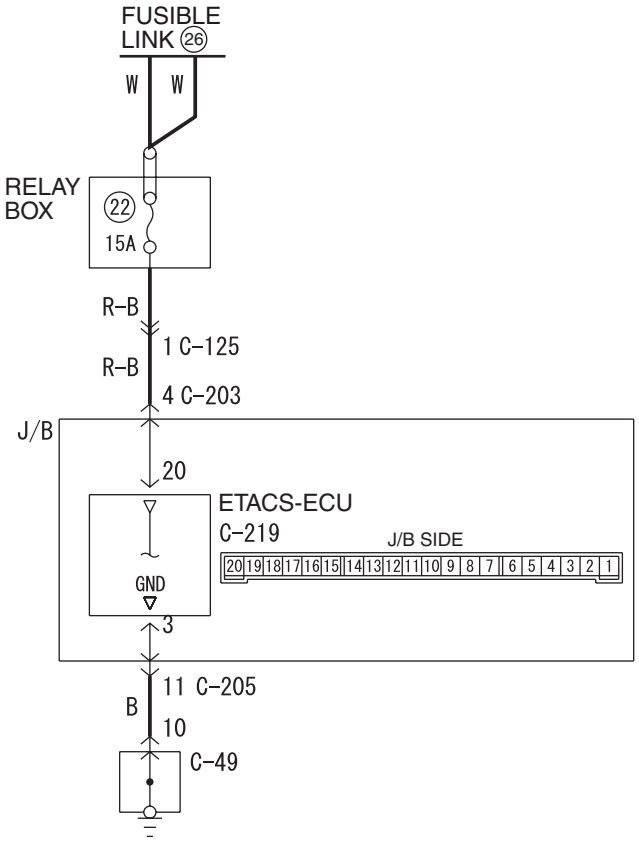

Wire colour code
B : Black LG : Light green
G : Green L : Blue
W : White Y : Yellow
SB : Sky blue BR : Brown
O : Orange GR : Grey
R : Red P : Pink
V : Violet PU : Purple

W6X54X010A

COMMENTS ON TROUBLE SYMPTOM

If this circuit is defective and the ignition switch is at the LOCK (OFF) position, the ETACS-ECU does not work. In this case, the functions below will be suspended.

- Lamp reminder function
- Keyless entry system
- Ignition key cylinder illumination lamp
- Headlamp automatic-shutdown function

However, when the ignition switch is at the ON position, the functions below will work.

- Reading diagnosis code and checking input signal by M.U.T.-III.
- Central door locking
- Headlamp and tail lamp
- Hazard warning lamp
- Interior lamps

POSSIBLE CAUSES

- Malfunction of the ETACS-ECU
- Damaged harness wires and connectors

Main Index
Group TOC

DIAGNOSTIC PROCEDURE

Step 1. Connector check: C-219 ETACS-ECU connector

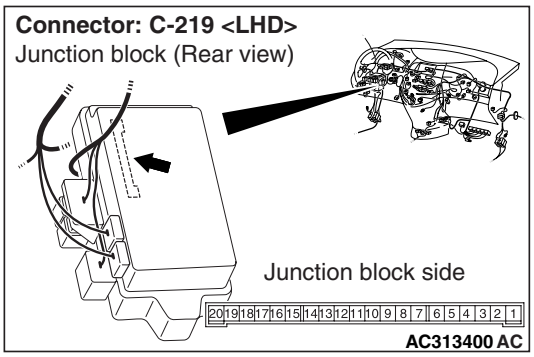

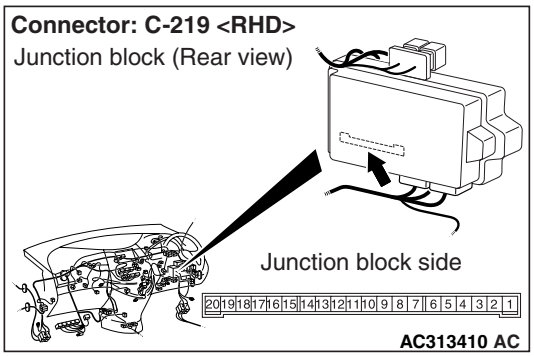

Q: Is the check result normal?
YES : Go to Step 2.
NO : Repair the defective connector.

Step 2. Voltage measurement at the C-219 ETACS-ECU connector.

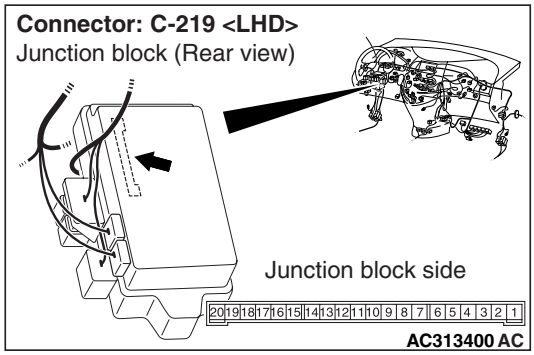

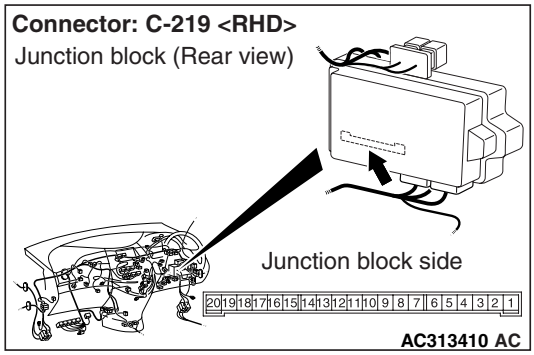

(1) Remove the ETACS-ECU, and measure at the junction block side.

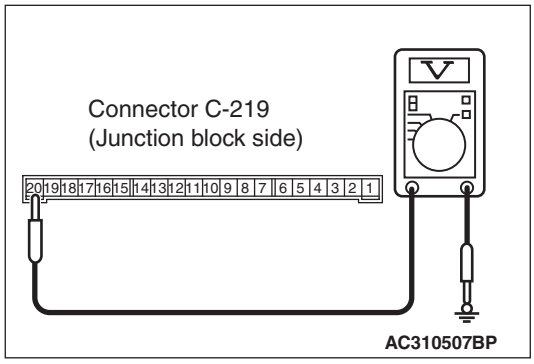

(2) Voltage between C-219 ETACS-ECU connector terminal No.20 and body earth.

OK: System voltage

Q: Is the check result normal?
YES : Go to Step 4.
NO : Go to Step 3.

Main Index
Group TOC

Step 3. Check the wiring harness between C-219 ETACS-ECU connector terminal No.20 and fusible link (26).

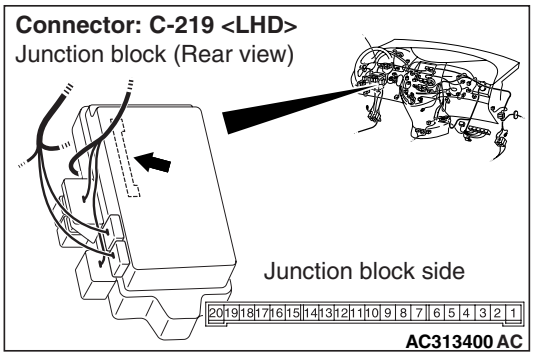

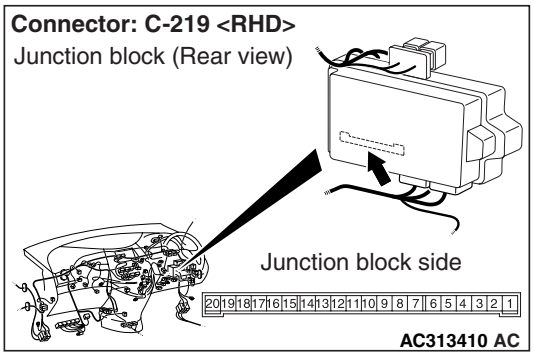

NOTE:

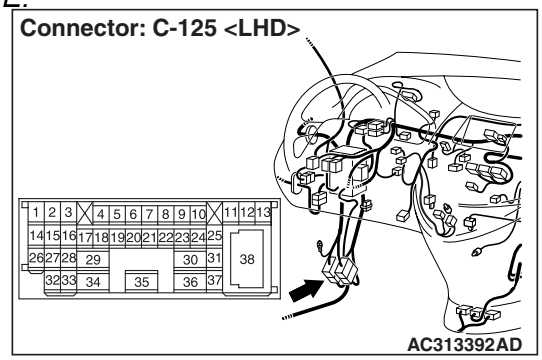

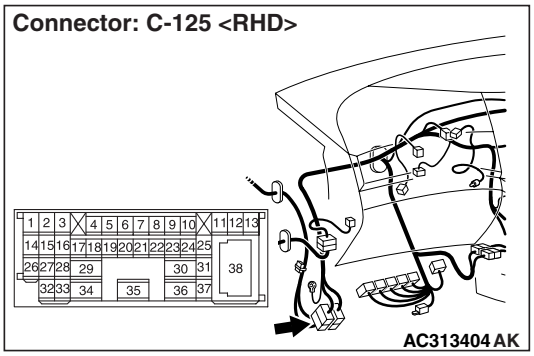

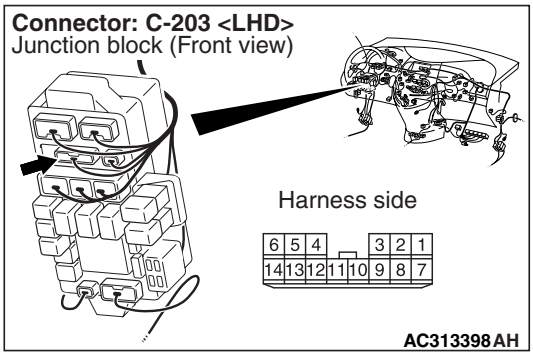

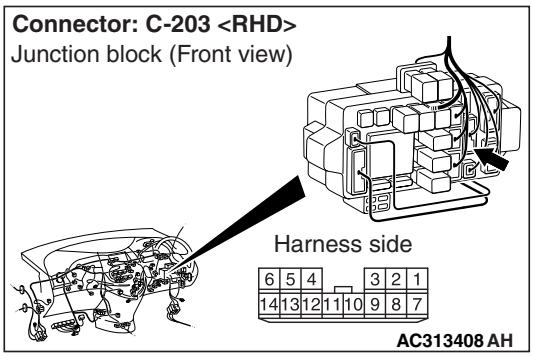

Prior to the wiring harness inspection, check the intermediate connector C-125 and junction block connector C-203, and repair if necessary.

- Check the power supply line for open circuit.

Q: Is the check result normal?

YES : The trouble can be an intermittent malfunction (Refer to GROUP 00 – How to Cope with Intermittent Malfunction P.00-5).

NO : Repair the wiring harness.

Main Index
Group TOC

Step 4. Resistance measurement at the C-219 ETACS-ECU connector.

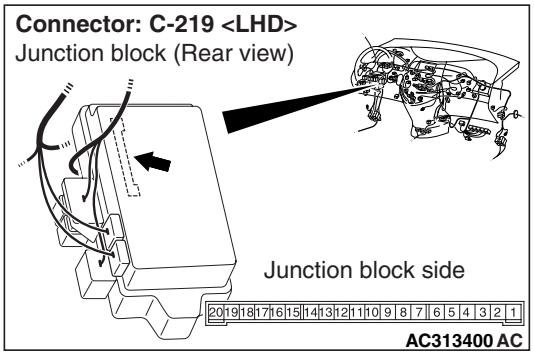

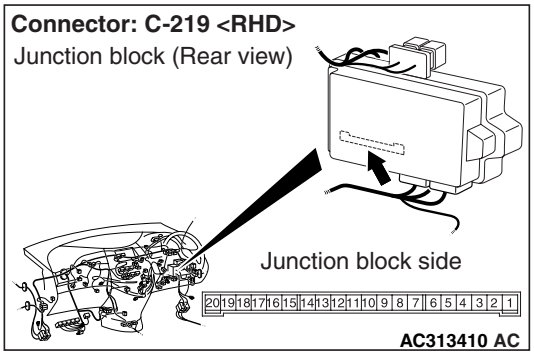

(1) Remove the ETACS-ECU, and measure at the junction block side.

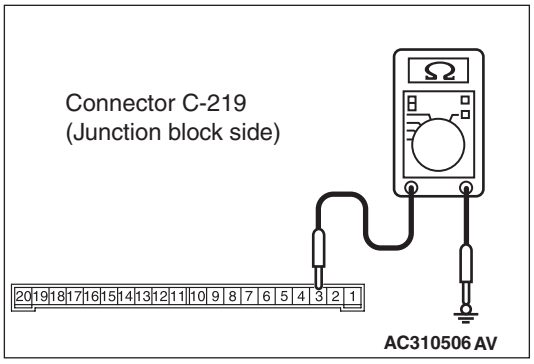

(2) Continuity between C-219 ETACS-ECU connector terminal No.3 and body earth.

OK: 2Ω or less

Q: Is the check result normal?
YES : Go to Step 7.
NO : Go to Step 5.

Step 5. Connector check: C-49 earth connector

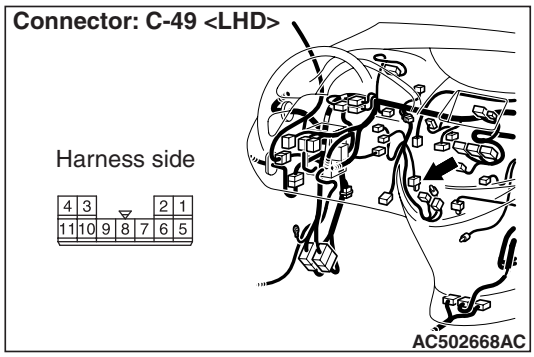

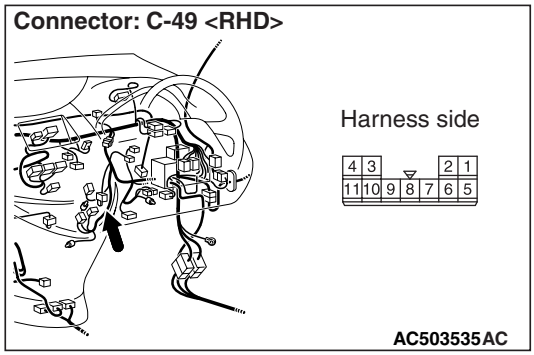

Q: Is the check result normal?
YES : Go to Step 6.
NO : Repair the connector.

Main Index
Group TOC

Step 6. Check the wiring harness between C-219 ETACS-ECU connector terminal No.3 andC-49 earth connector terminal No.10.

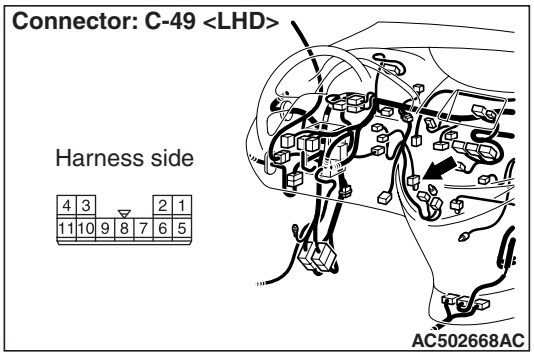

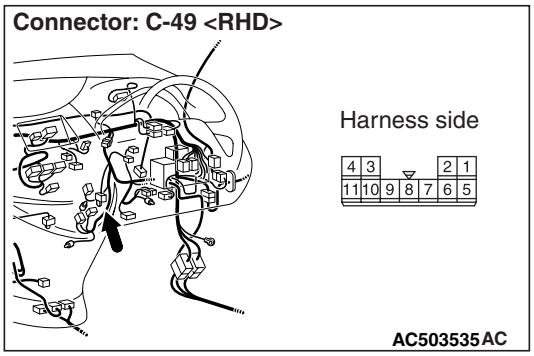

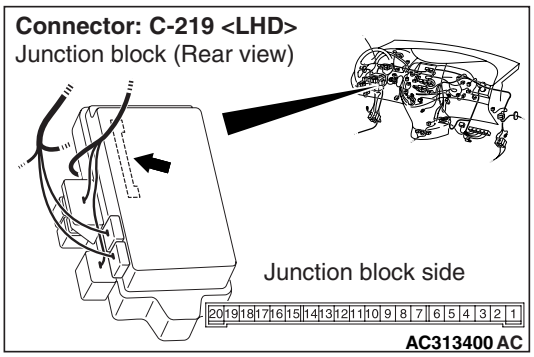

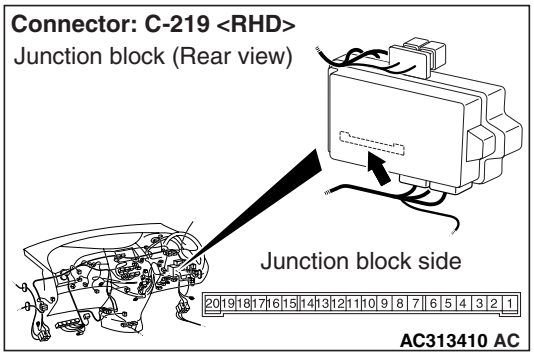

NOTE:

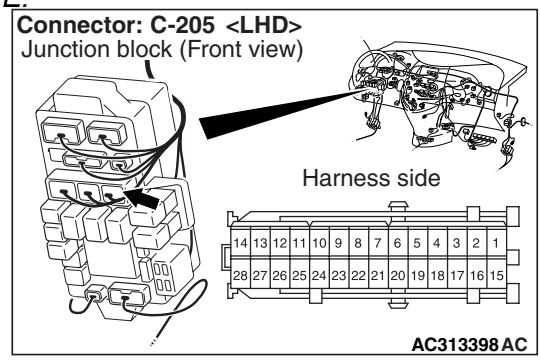

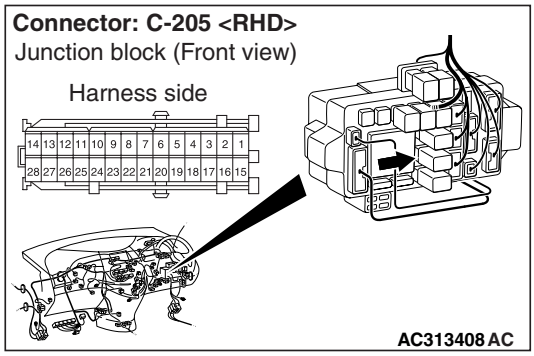

Prior to the wiring harness inspection, check junction block connector C-205, and repair if necessary.

- Check the earth wires for open circuit.

Q: Is the check result normal?

YES : The trouble can be an intermittent malfunction (Refer to GROUP 00 – How to Cope with Intermittent Malfunction P.00-5).

NO : Repair the wiring harness.

Step 7. Retest the system.

Check that the battery power supply circuit to the ETACS-ECU is normal.

Q: Is the check result normal?

YES : The trouble can be an intermittent malfunction (Refer to GROUP 00 – How to Cope with Intermittent Malfunction P.00-5).

NO : Replace the ETACS-ECU.

Main Index
Group TOC

BUZZER

INSPECTION PROCEDURE B-1: Lamp reminder buzzer function does not work normally.

⚠ CAUTION
Whenever the ECU is replaced, ensure that the input and output signal circuits are normal.

Lamp Reminder Tone Alarm Function

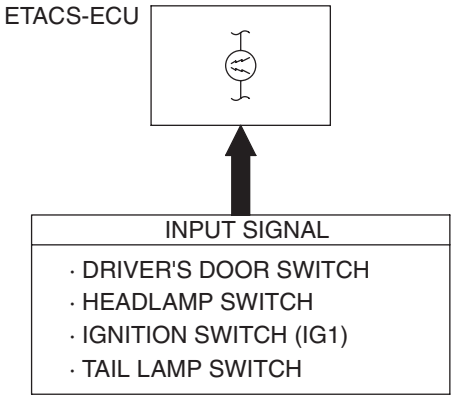

W3Z10E07AA

COMMENTS ON TROUBLE SYMPTOM

The ETACS-ECU operates this function in accordance with the input signals below.

- Ignition switch (IG1)
- Driver's door switch
- Tail lamp switch
- Headlamp switch

If this function does not work normally, these input signal circuit(s) or the ETACS-ECU may be defective.

POSSIBLE CAUSES

- Malfunction of the driver's door switch
- Malfunction of the column switch
- Malfunction of the ETACS-ECU
- Damaged harness wires and connectors

DIAGNOSTIC PROCEDURE

Step 1. Check the power supply circuit.
When the ignition switch is turned to the LOCK (OFF) position, check if the hazard warning lamps illuminate.

Q: Is the check result normal?
YES : Go to Step 2.
NO : Refer to inspection procedure A-2 "Check the ETACS-ECU battery power supply circuit P.54B-71."

Main Index
Group TOC

Step 2. Pulse check

Check the input signals below, which are related to the lamp reminder buzzer function.

System switch	Check condition
Ignition switch (IG1)	When turned from ACC to ON
Driver's door switch	When the driver's door is opened
Tail lamp switch	When the lighting switch is turned to the TAIL position
Headlamp switch	When the lighting switch is turned to the HEADLAMP position

OK: The M.U.T.-III sounds or the voltmeter needle fluctuates.

Q: Are the check result normal?

All the signals are received normally. : Go to Step 3.

The ignition switch (IG1) signal is not received. : Refer to inspection procedure P-2 "The ignition switch (IG1) signal is not received P.54B-322."

The driver's door switch signal is not received. : Refer to inspection procedure P-5 "The driver's door switch signal is not received P.54B-333 <LH drive vehicles> or P.54B-335 <RH drive vehicles>."

The tail lamp switch signal is not received. : Refer to inspection procedure P-6 "The column switch (lighting and turn-signal lamp switch) signal is not received P.54B-337."

The headlamp switch signal is not received. : Refer to inspection procedure P-6 "The column switch (lighting and turn-signal lamp switch) signal is not received P.54B-337."

Step 3. Retest the system.

The lamp reminder buzzer function should work normally.

Q: Is the check result normal?

YES : The trouble can be an intermittent malfunction (Refer to GROUP 00 – How to Cope with Intermittent Malfunction P.00-5).

NO : Replace the ETACS-ECU.

Main Index
Group TOC

INSPECTION PROCEDURE B-2: Seat belt warning buzzer function does not work normally. <Vehicles for GCC>

⚠ CAUTION
Whenever the ECU is replaced, ensure that the input and output signal circuits are normal.

Seat Belt Warning Buzzer Function

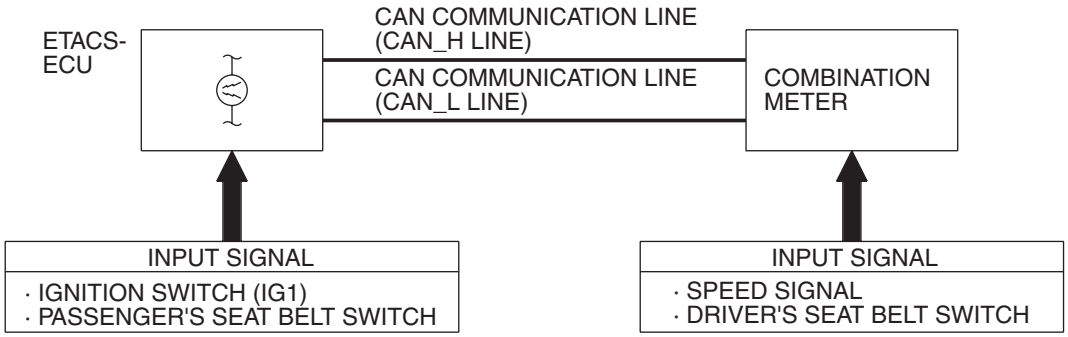

W4X54E166A

COMMENTS ON TROUBLE SYMPTOM

If the function does not work normally, the input circuit system from the switches or the ETACS-ECU may be defective (refer to "CIRCUIT OPERATION").

POSSIBLE CAUSES

- Malfunction of the ETACS-ECU
- Malfunction of the driver's seat belt switch
- Malfunction of the passenger's seat belt switch
- Damaged harness wires and connectors

DIAGNOSTIC PROCEDURE

Step 1. Check the diagnosis code.

When the ignition switch is turned to the LOCK (OFF) position, check that the ETACS-ECU does not set the diagnosis code.

Q: Is the diagnosis code set?
YES : Refer to diagnosis code chart P.54B-26.
NO : Go to Step 2.

Step 2. Pulse check

Check the input signals, which are related to the seat belt warning buzzer function.

System switch	Check condition
Ignition switch (IG1)	When turned from ACC to ON
Driver's seat belt switch	ON
Vehicle speed signal	When the vehicle speed has reached 10 km/h or more.

OK: The M.U.T.-III sounds or the voltmeter needle fluctuates.

Q: Are the check result normal?
All the signals are received normally. : Go to Step 3.
The ignition switch (IG1) signal is not received. : Refer to inspection procedure P-2 "The ignition switch (IG1) signal is not received P.54B-322."
Driver's seat belt switch signal is not received : Refer to inspection procedure P-17 "The driver's seat belt switch signal is not received <LH drive vehicles>P.54B-384 or <RH drive vehicles>P.54B-387 ."
Vehicle speed signal is not received : Refer to inspection procedure P-23 "The vehicle speed signal is not received P.54B-408."

Step 3. Retest the system.
Check that the seat belt warning buzzer function work normally.

Q: Is the check result normal?
YES : . The trouble can be an intermittent malfunction (Refer to GROUP 00 – How to Cope with Intermittent Malfunction P.00-5).
NO : . Replace the ETACS-ECU.

INSPECTION PROCEDURE B-2: Seat belt warning buzzer function does not work normally. <Vehicles for Australia and New Zealand>

⚠ CAUTION
Whenever the ECU is replaced, ensure that the input and output signal circuits are normal.

Seat Belt Warning Buzzer Function

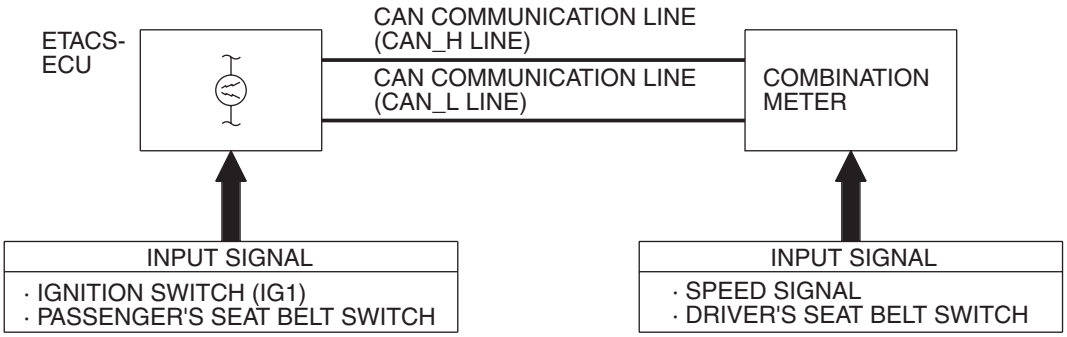

W4X54E166A

COMMENTS ON TROUBLE SYMPTOM
If the function does not work normally, the input circuit system from the switches or the ETACS-ECU may be defective (refer to "CIRCUIT OPERATION").

POSSIBLE CAUSES
- Malfunction of the ETACS-ECU
- Malfunction of the driver's seat belt switch
- Malfunction of the passenger's seat belt switch
- Damaged harness wires and connectors

DIAGNOSTIC PROCEDURE

Step 1. Check the diagnosis code.
When the ignition switch is turned to the LOCK (OFF) position, check that the ETACS-ECU does not set the diagnosis code.

Q: Is the diagnosis code set?
YES : Refer to diagnosis code chart P.54B-26.
NO : Go to Step 2.

Step 2. Check the seat belt switch, where the seat belt warning buzzer does not function normally.

Q: Which seat belt switch does not activate the seat belt warning buzzer?
Driver's seat belt : Go to Step 3
Passenger's seat belt : Go to Step 4.

Main Index
Group TOC

Step 3. Pulse check

Check the input signals, which are related to the seat belt warning buzzer function.

System switch	Check condition
Ignition switch (IG1)	When turned from ACC to ON
Driver's seat belt switch	ON

OK: The M.U.T.-III sounds or the voltmeter needle fluctuates.

Q: Are the check result normal?

All the signals are received normally. : Go to Step 5.

The ignition switch (IG1) signal is not received. : Refer to inspection procedure P-2 "The ignition switch (IG1) signal is not received P.54B-322."

Driver's seat belt switch signal is not received : Refer to inspection procedure P-17 "The driver's seat belt switch signal is not received <LH drive vehicles>P.54B-384 or <RH drive vehicles>P.54B-387 ."

Step 4. Pulse check

Check the input signals, which are related to the seat belt warning buzzer function.

System switch	Check condition
Ignition switch (IG1)	When turned from ACC to ON
Passenger's seat belt switch and seat occupancy sensor	ON

OK: The M.U.T.-III sounds or the voltmeter needle fluctuates.

Q: Are the check result normal?

All the signals are received normally. : Go to Step 5.

The ignition switch (IG1) signal is not received. : Refer to inspection procedure P-2 "The ignition switch (IG1) signal is not received P.54B-322."

Passenger's seat belt switch signal is not received : Refer to inspection procedure P-18 "The passenger's seat belt switch is not received <Vehicles for Australia and New Zealand>P.54B-390 ."

Step 5. Pulse check

Check the input signals below which are related to the seat belt warning buzzer function.

System switch	Check condition
Vehicle speed signal	When the vehicle speed has reached 10 km/h or more.

OK: The M.U.T.-III sounds or the voltmeter needle fluctuates.

Q: Is the check result normal?

YES : Go to Step 6.

NO : Refer to inspection procedure P-23 "The vehicle speed signal is not received P.54B-408."

Step 6. Retest the system.

Check that the seat belt warning buzzer function work normally.

Q: Is the check result normal?

YES : The trouble can be an intermittent malfunction (Refer to GROUP 00 – How to Cope with Intermittent Malfunction P.00-5).

NO : Replace the ETACS-ECU.

Main Index
Group TOC

INSPECTION PROCEDURE B-3: Door-ajar warning buzzer function does not work normally.

⚠ CAUTION
Whenever the ECU is replaced, ensure that the input and output signal circuits are normal.

Door-Ajar Warning Buzzer Function

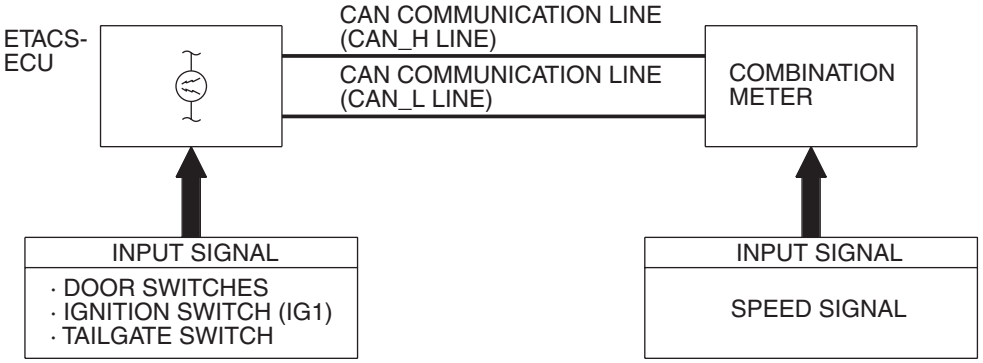

W4X54E220A

COMMENTS ON TROUBLE SYMPTOM

The ETACS-ECU operates this function in accordance with the input signals below.

- Ignition switch (IG1)
- Door switches
- Tailgate switch
- Vehicle speed signal

If this function does not work normally, these input signal circuit(s) or the ETACS-ECU may be defective. Note that this function can be disabled/enabled by the customize function (default setting; enabled). In order to change the setting, the SWS monitor is required.

POSSIBLE CAUSES

- Malfunction of the door switches
- Malfunction of the tailgate switch
- Malfunction of the ETACS-ECU
- Damaged harness wires and connectors

DIAGNOSTIC PROCEDURE

Step 1. Check the power supply circuit.
When the ignition switch is turned to the LOCK (OFF) position, check if the hazard warning lamps illuminate.

Q: Is the check result normal?
YES : Go to Step 2.
NO : Refer to inspection procedure A-2 "Check the ETACS-ECU battery power supply circuit P.54B-71."

Main Index
Group TOC

Step 2. Pulse check

Check the input signals below, which are related to the door-ajar warning buzzer function.

System switch	Check conditions
Ignition switch (IG1)	When turned from ACC to ON
Driver's door switch	Driver's door opened
Passenger's door switch	Passenger's door opened
Rear door (RH) switch	Rear door (RH) opened
Rear door (LH) switch	Rear door (LH) opened
Tailgate switch	A tailgate opened
Vehicle speed signal	When the vehicle speed has reached 10 km/h or more

OK: The M.U.T.-III sounds or the voltmeter needle fluctuates.

Q: Are the check result normal?

All the signals are received normally. : Go to Step 3.

The ignition switch (IG1) signal is not received. : Refer to inspection procedure P-2 "The ignition switch (IG1) signal is not received" P.54B-322.

All the door switch signals are not received. : Refer to inspection procedure P-12 "All the door switch signals are not received P.54B-358."

The vehicle speed signal is not received. : Refer to inspection procedure P-23 "The vehicle speed signal is not received" P.54B-408.

Step 3. Check the SWS monitor customized function.

Use the SWS monitor customize function to confirm that "DOOR WARN BUZ" is set to "W.FUNCTION".

⚠ CAUTION

The SWS monitor must be used in order to confirm and change that setting. Use the SWS monitor to confirm and/or change the customized function.

Q: Is the check result normal?

YES : Go to Step 4.

NO : Use the SWS monitor customize function to set "DOOR WARN BUZ" to "W.FUNCTION" (Refer to GROUP 54C – Customize adjustment P.54C-432).

Step 4. Retest the system.

Check that the door-ajar warning buzzer function works normally.

Q: Is the check result normal?

YES : The trouble can be an intermittent malfunction (Refer to GROUP 00 – How to Cope with Intermittent Malfunction P.00-5).

NO : Replace the ETACS-ECU.

Main Index
Group TOC

INSPECTION PROCEDURE B-4: Turn-signal lamp operation sound function does not work normally.

⚠ CAUTION
Whenever the ECU is replaced, ensure that the input and output signal circuits are normal.

Turn-Signal Lamp Operation Sound Function

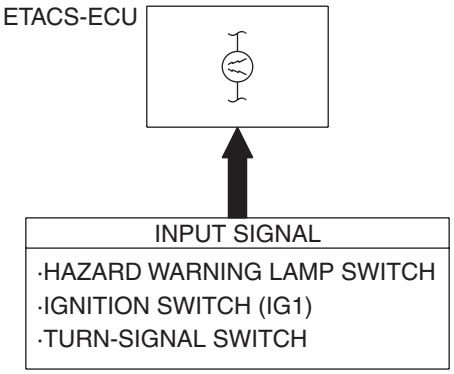

W4X54E225A

COMMENTS ON TROUBLE SYMPTOM

The ETACS-ECU operates this function in accordance with the input signals below.

- Ignition switch (IG1)
- Turn-signal lamp switch
- Hazard warning lamp switch

If this function does not work normally, these input signal circuit(s) or the ETACS-ECU may be defective. Note that this function can be disabled/enabled by the customize function (default setting; disabled). In order to change the setting, the SWS monitor is required.

POSSIBLE CAUSES

- Malfunction of the column switch
- Malfunction of the hazard warning lamp switch
- Malfunction of the ETACS-ECU
- Damaged harness wires and connectors

DIAGNOSTIC PROCEDURE

Step 1. Check that the turn-signal lamps operate.
When the turn-signal lamp switch or the hazard warning lamp switch is operated, check that the turn-signal lamps flash.

Q: Is the check result normal?
YES : Go to Step 2.
NO : First, repair the turn-signal lamp(s) (Refer to Trouble Symptom Chart P.54B-58).

Main Index
Group TOC

Step 2. Pulse check

Check the input signals below, which are related to the turn-signal lamp operation sound function.

System switch	Check conditions
Ignition switch (IG1)	When turned from ACC to ON
Turn-signal lamp switch (RH)	When the turn-signal lamp switch (RH) is turned from off to on
Turn-signal lamp switch (LH)	When the turn-signal lamp switch (LH) is turned from off to on
Hazard warning lamp switch	When the hazard warning lamp switch is turned from off to on

OK: The M.U.T.-III sounds or the voltmeter needle fluctuates.

Q: Are the check result normal?

All the signals are received normally. : Go to Step 3.

The ignition switch (IG1) signal is not received. : Refer to inspection procedure P-2 "The ignition switch (IG1) signal is not received P.54B-322."

The turn-signal lamp switch (RH) signal is not received. : Refer to inspection procedure P-6 "The column switch (lighting and turn-signal lamp switch) signal is not received P.54B-337."

The turn-signal lamp switch (LH) signal is not received. : Refer to inspection procedure P-6 "The column switch (lighting and turn-signal lamp switch) signal is not received P.54B-337."

The hazard warning lamp switch signal is not received. : Refer to inspection procedure P-11 "The hazard warning lamp switch signal is not received P.54B-354."

Step 3. Check the SWS monitor customized function.

Use the SWS monitor customize function to confirm that "T/SIG.BUZZER" is set to "W.FUNCTION".

⚠ CAUTION

The SWS monitor must be used in order to confirm and change that setting. Use the SWS monitor to confirm and/or change the customized function.

Q: Is the check result normal?

YES : Go to Step 4.

NO : Use the SWS monitor customize function to set "T/SIG.BUZZER" to "W.FUNCTION" (Refer to GROUP 54C – Customize function P.54C-432).

Step 4. Retest the system.

Check that the turn-signal lamp operation sound function works normally.

Q: Is the check result normal?

YES : The trouble can be an intermittent malfunction (Refer to GROUP 00 – How to Cope with Intermittent Malfunction P.00-5).

NO : Replace the ETACS-ECU.

Main Index
Group TOC

Inspection procedure B-5: Ignition key reminder buzzer function does not work. <Vehicles for GCC only>

⚠ CAUTION
Whenever the ECU is replaced, ensure that the input and output signal circuits are normal.

Ignition Key Reminder Buzzer

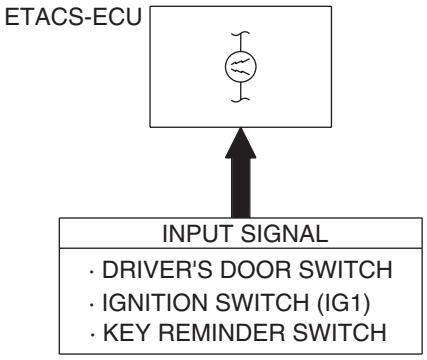

W4X54X101A

COMMENTS ON TROUBLE SYMPTOM

The ETACS-ECU operates this function in accordance with the input signals below.

- Ignition switch (IG1)
- Key reminder switch
- Driver's door switch

If this function does not work normally, these input signal circuit(s) or the ETACS-ECU may be defective.

PROBABLE CAUSES

- Malfunction of the key reminder switch
- Malfunction of the driver's door switch
- Malfunction of the ETACS-ECU
- Damaged harness wires and connectors

DIAGNOSIS PROCEDURE

STEP 1. Check the power supply circuit.

When the ignition switch is turned to the LOCK (OFF) position, check if the hazard warning lamps illuminate.

Q: Is the check result normal?

YES : Go to Step 2.

NO : Refer to inspection procedure A-2 "Check the ETACS-ECU battery power supply circuit P.54B-71."

STEP 2. Pulse check

Check the input signals below, which are related to the ignition key reminder function.

System switch	Check conditions
Ignition switch (IG1)	When turned from ACC to ON
Key reminder switch	When the inserted ignition key is pulled out
Driver's door switch	When the driver's door is opened

OK: The M.U.T.-III sounds or the voltmeter needle fluctuates.

Q: Is the check result normal?

All the signals are received normally. : Go to Step 3.

The ignition switch (IG1) signal is not received. : Refer to inspection procedure P-2 "The ignition switch (IG1) signal is not received P.54B-322."

The key reminder switch signal is not received. : Refer to inspection procedure P-10 "The key reminder switch signal is not received P.54B-350."

The driver's door switch signal is not received. : Refer to inspection procedure P-5 "The driver's door switch signal is not received <L.H. drive vehicles>P.54B-333 or <R.H. drive vehicles>P.54B-335 ."

Main Index
Group TOC

STEP 3. Retest the system.
The ignition key reminder buzzer function should work normally.

Q: Is the check result normal?
YES : . The trouble can be an intermittent malfunction (Refer to GROUP 00 – How to Cope with Intermittent Malfunction P.00-5).
NO : . Replace the ETACS-ECU.

Inspection procedure B-6: The speed alarm buzzer does not work. <Vehicles for GCC only>

⚠ CAUTION
Whenever the ECU is replaced, ensure that the input and output signal circuits are normal.

COMMENTS ON TROUBLE SYMPTOM

The ETACS-ECU operates this function in accordance with the vehicle speed signal.
If this function does not work normally, the engine-A/T-ECU or the ETACS-ECU may be defective.

PROBABLE CAUSES

- Malfunction of the engine-A/T-ECU
- Malfunction of the ETACS-ECU
- Damaged harness wires and connectors

DIAGNOSIS PROCEDURE

STEP 1. Pulse check
Check the input signals which are related to the speed alarm buzzer.

System switch	Check conditions
Vehicle speed signal	When the vehicle speed has reached 10 km/h or more

OK: The M.U.T.-III sounds or the voltmeter needle fluctuates.

Q: Is the check result normal?
YES : Go to Step 2.
NO : Refer to inspection procedure P-23 "The vehicle speed signal is not received P.54B-408."

STEP 2. Retest the system.
Check that the speed alarm buzzer works normally.

Q: Is the check result normal?
YES : The trouble can be an intermittent malfunction (Refer to GROUP 00 – How to Cope with Intermittent Malfunction P.00-5).
NO : Replace the ETACS-ECU.

Main Index
Group TOC

CENTRAL DOOR LOCKING SYSTEM

INSPECTION PROCEDURE C-1: central door locking system does not work.

⚠ CAUTION

Whenever the ECU is replaced, ensure that the input and output signal circuits are normal.

Central Door Lock Power Supply Circuit

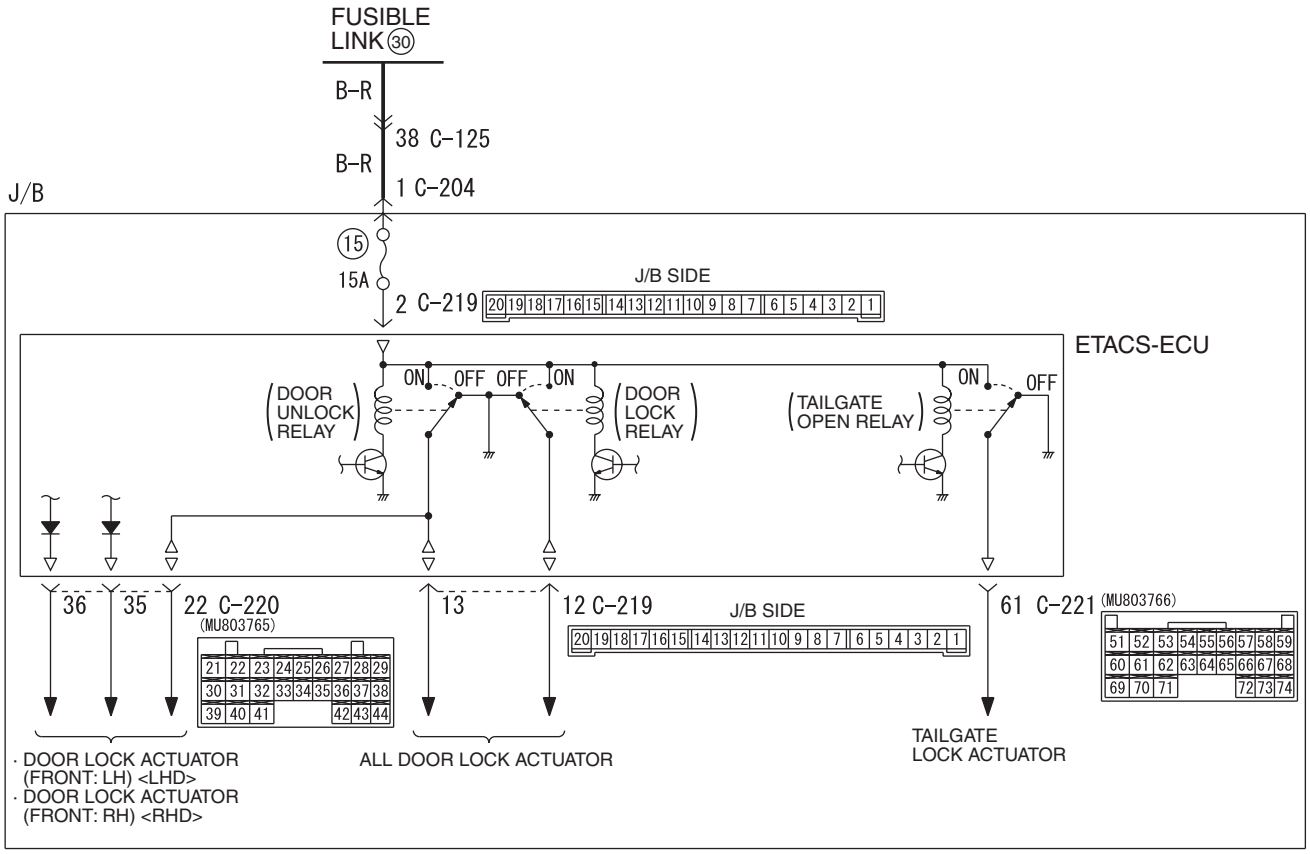

W4X54E040A

COMMENT ON TROUBLE SYMPTOM

If the central door locking system does not work at all, the ETACS-ECU may be defective.

POSSIBLE CAUSES

- Malfunction of the ETACS-ECU
- Damaged harness wires and connectors

Main Index
Group TOC

DIAGNOSIS PROCEDURE

Step 1. Check that the central door locking system functions by using the front passenger's key cylinder.

Check that the central door locking system works normally by means of the front passenger's door key cylinder.

Q: Is the check result normal?

YES : Go to Step 2.

NO : Refer to Inspection Procedure C-3 "The central door locking system does not function by using the passenger's door key cylinder P.54B-91."

Step 2. Check the power supply circuit.

When the ignition switch is turned to the LOCK (OFF) position, check if the hazard warning lamps illuminate.

Q: Is the check result normal?

YES : Go to Step 3.

NO : Refer to inspection procedure A-2 "Check the ETACS-ECU battery power supply circuit P.54B-71."

Step 3. Connector check: C-219 ETACS-ECU connector

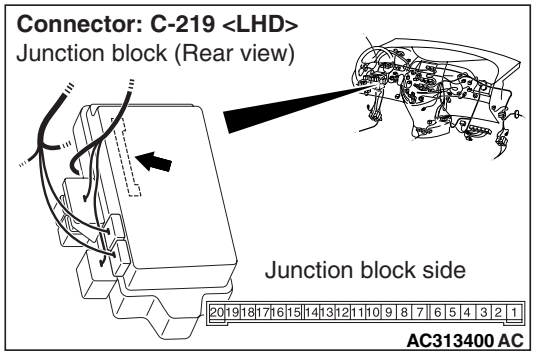

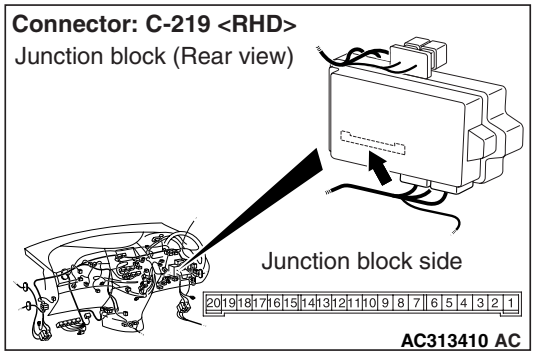

Q: Is the check result normal?

YES : Go to Step 4.

NO : Repair the defective connector.

Main Index
Group TOC

Step 4. Check the wiring harness between C-219 ETACS-ECU connector terminal No.2 and fusible link (30).

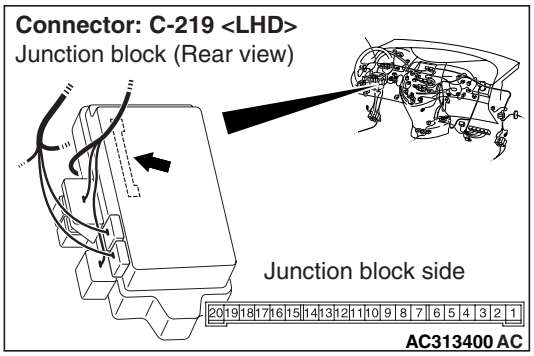

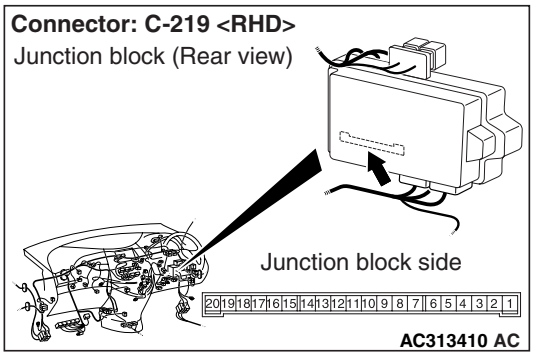

NOTE:

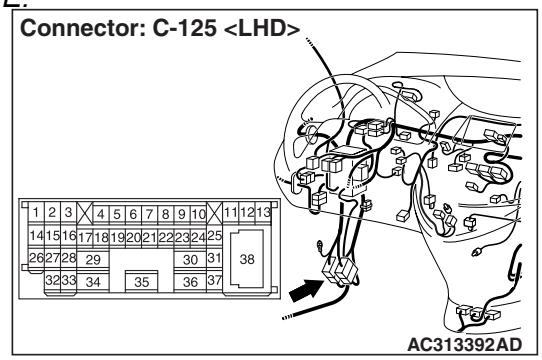

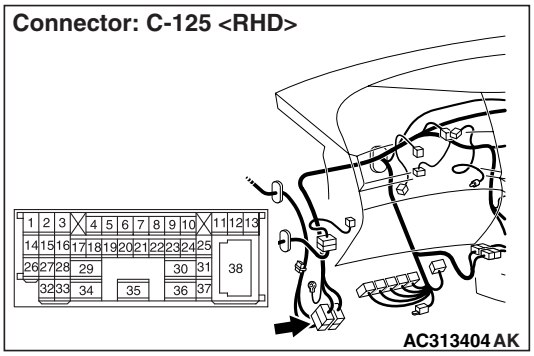

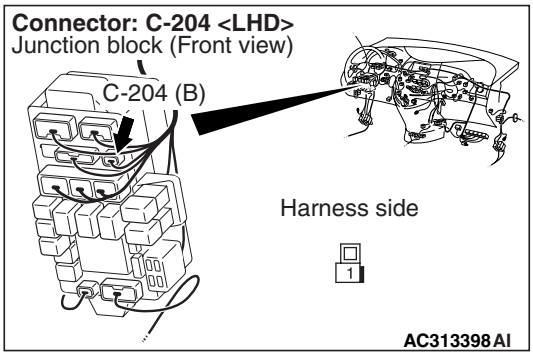

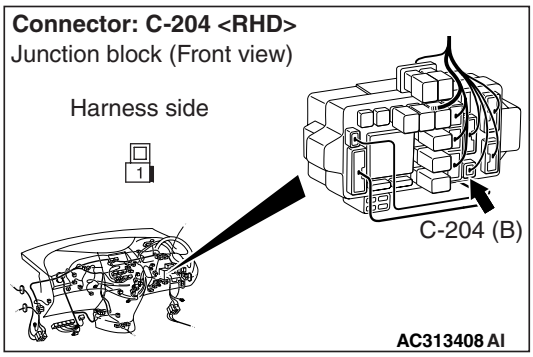

Prior to the wiring harness inspection, check intermediate connector C-125 and junction block connector C-204, and repair if necessary.

- Check the power supply line for open or short circuit.

Q: Is the check result normal?
YES : Go to Step 5.
NO : Repair the wiring harness.

Step 5. Retest the system.
Check that the central door locking system works normally.

Q: Is the check result normal?
YES : The trouble can be an intermittent malfunction (Refer to GROUP 00 – How to Cope with Intermittent Malfunction P.00-5).
NO : Replace the ETACS-ECU.

Main Index
Group TOC

INSPECTION PROCEDURE C-2: The central door locking system does not function by using the driver's door lock switch.

⚠ CAUTION
Whenever the ECU is replaced, ensure that the input and output signal circuits are normal.

Central Door Lock (Driver's Door Lock Actuator Switch) Circuit

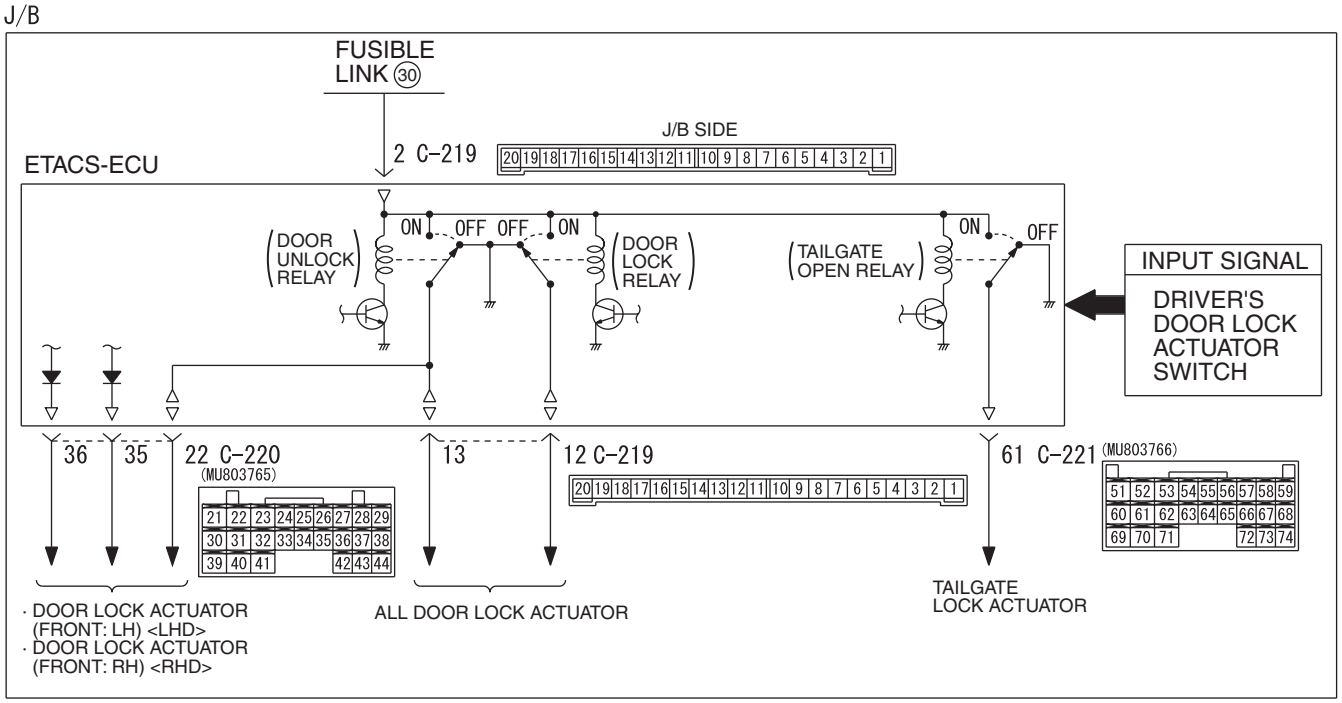

W4X54E214A

COMMENT ON TROUBLE SYMPTOM

If the central door locking system does not work normally only when the driver's door lock switch is operated, the driver's door lock actuator or the ETACS-ECU may be defective.

POSSIBLE CAUSES

- Malfunction of the driver's door lock actuator
- Malfunction of the ETACS-ECU
- Damaged harness wires and connectors

DIAGNOSIS PROCEDURE

Step 1. Pulse check

Check the input signal, which is related to the driver's door lock operation.

System switch	Check condition
Driver's door lock actuator switch	When the driver's key cylinder or inside lock knob is unlocked or locked

OK: The M.U.T.-III sound or the voltmeter needle fluctuate.

Q: Is the check result normal?

YES : Go to Step 2.

NO : Refer to inspection procedure P-13 "The driver's door lock actuator signal is not received <LH drive vehicles>P.54B-364 or <RH drive vehicles>P.54B-367 ."

Step 2. Retest the system.
Check that the central door locking system works normally by the driver's door lock operation.

Q: Is the check result normal?
YES : . The trouble can be an intermittent malfunction (Refer to GROUP 00 – How to Cope with Intermittent Malfunction P.00-5).
NO : . Replace the ETACS-ECU.

INSPECTION PROCEDURE C-3: The central door locking system does not function by using the passenger's door key cylinder.

⚠ CAUTION
Whenever the ECU is replaced, ensure that the input and output signal circuits are normal.

Central Door Lock (Door Key Switch) Circuit

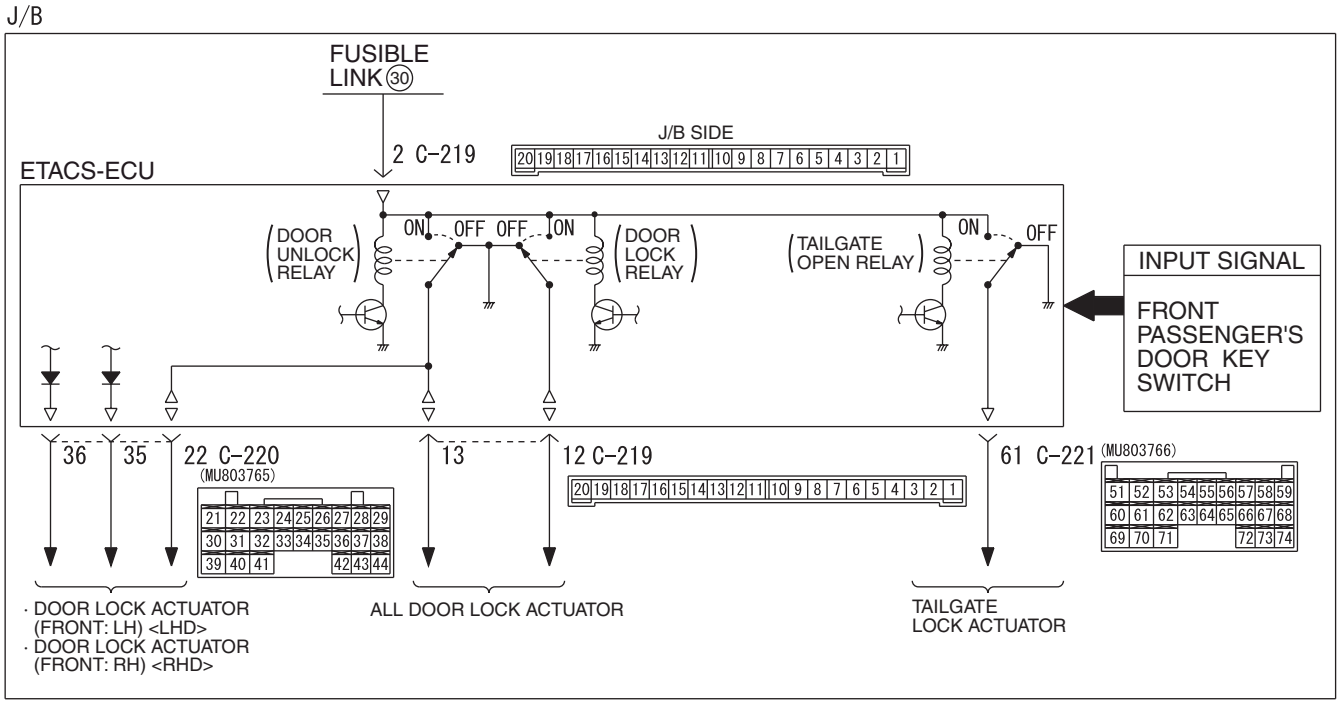

W4X54E150A

COMMENT ON TROUBLE SYMPTOM

If the central door locking system does not work normally only when the front passenger's key cylinder is operated, the front passenger's door key switch or the ETACS-ECU may be defective.

POSSIBLE CAUSES

- Malfunction of the front passenger's door key switch
- Malfunction of the ETACS-ECU
- Damaged harness wires and connectors

Main Index
Group TOC

DIAGNOSIS PROCEDURE

Step 1. Pulse check

Check the input signal, which is related to the front passenger's door key cylinder operation.

System switch	Check condition
Front passenger's key cylinder (front passenger's door key switch)	When the passenger's key cylinder is unlocked or locked

OK: The M.U.T.-III sound or the voltmeter needle fluctuate.

Q: Is the check result normal?

YES : . Go to Step 2.

NO : . Refer to inspection procedure P-14 "The passenger's door lock key switch signal is not received <LH drive vehicles>P.54B-370 or <RH drive vehicles>P.54B-373 ."

Step 2. Retest the system.

Check that the central door locking system works normally by the front passenger's key cylinder operation.

Q: Is the check result normal?

YES : The trouble can be an intermittent malfunction (Refer to GROUP 00 – How to Cope with Intermittent Malfunction P.00-5).

NO : Replace the ETACS-ECU.

Main Index
Group TOC

INSPECTION PROCEDURE C-4: The central door locking system does not function by using the tailgate key cylinder.

⚠ CAUTION
Whenever the ECU is replaced, ensure that the input and output signal circuits are normal.

Central Door Lock (Tailgate Key Switch) Circuit

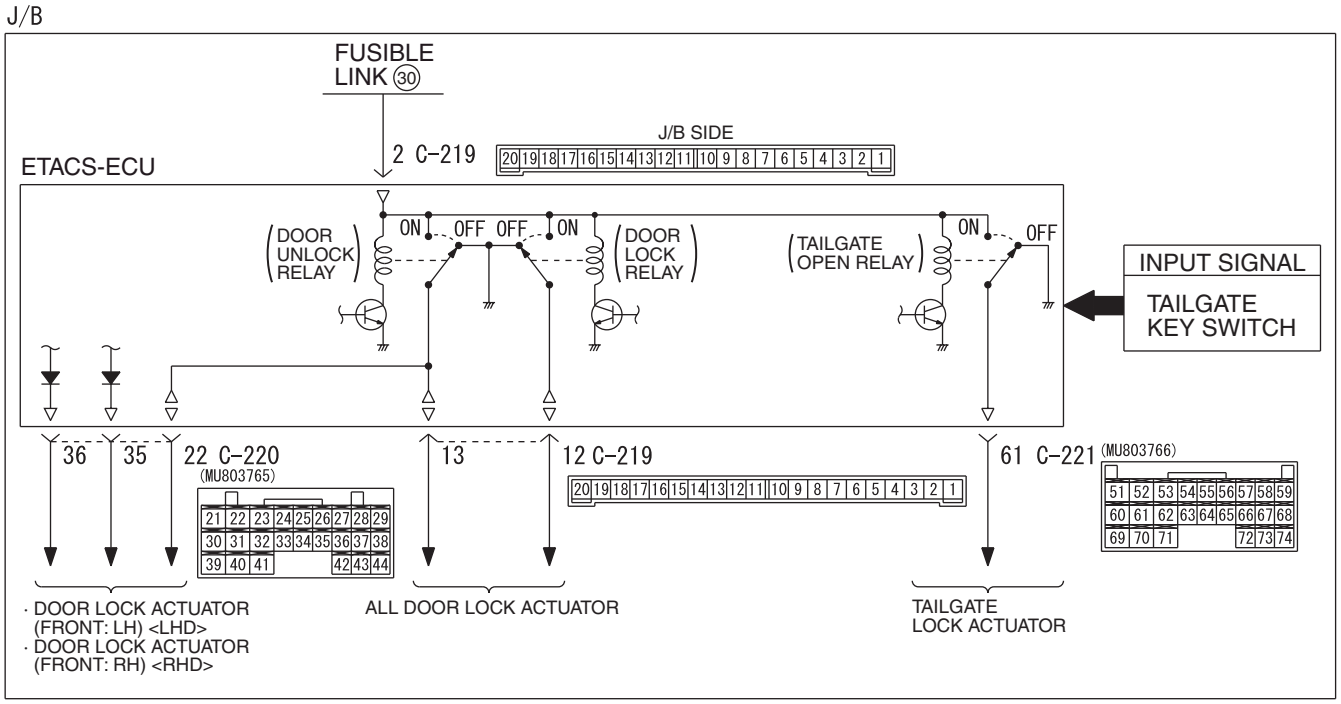

W4X54E149A

COMMENT ON TROUBLE SYMPTOM

If the central door locking system does not work normally only when the tailgate key cylinder is operated, the tailgate key switch or the ETACS-ECU may be defective.

POSSIBLE CAUSES

- Malfunction of the tailgate key switch
- Malfunction of the ETACS-ECU
- Damaged harness wires and connectors

DIAGNOSIS PROCEDURE

Step 1. Pulse check
Check the input signal, which is related to the tailgate key cylinder operation.

System switch	Check condition
Tailgate key cylinder (tailgate key switch)	When the front tailgate key cylinder is unlocked or locked

OK: The M.U.T.-III sound or the voltmeter needle fluctuate.

Q: Is the check result normal?
YES : Go to Step 2.
NO : Refer to inspection procedure P-15 "The tailgate key switch signal is not received P.54B-376."

Main Index
Group TOC

Step 2. Retest the system.
Check that the central door locking system works normally by the tailgate key cylinder operation.

Q: Is the check result normal?
YES : The trouble can be an intermittent malfunction (Refer to GROUP 00 – How to Cope with Intermittent Malfunction P.00-5).
NO : Replace the ETACS-ECU.

INSPECTION PROCEDURE C-5: The ignition key reminder function does not work normally. <Vehicles with keyless entry system>

⚠ CAUTION
Whenever the ECU is replaced, ensure that the input and output signal circuits are normal.

COMMENTS ON TROUBLE SYMPTOM

If the key reminder function does not work normally, the input signal circuits below or the ETACS-ECU may be defective.
- Key reminder switch
- Driver's door switch
- Driver's door lock actuator

PROBABLE CAUSES

- Malfunction of the key reminder switch
- Malfunction of the driver's door switch
- Malfunction of the driver's door lock actuator
- Malfunction of the ETACS-ECU
- Damaged harness wires and connectors

DIAGNOSIS PROCEDURE

Step 1. Check the power supply circuit.
When the ignition switch is turned to the LOCK (OFF) position, check if the hazard warning lamps illuminate.

Q: Is the check result normal?
YES : Go to Step 2.
NO : Refer to inspection procedure A-2 "Check the ETACS-ECU battery power supply circuit P.54B-71."

Step 2. Pulse check
Check the input signal which is related to the key reminder function.

System switch	Check conditions
Driver's door switch	When the driver's door is opened
Key reminder switch	When the inserted ignition key is pulled out
Driver's door lock actuator switch	When the driver's key cylinder or inside lock knob is unlocked or locked

OK: The M.U.T.-III sounds or the voltmeter needle fluctuates.

Q: Is the check result normal?
All the signals are received normally. : Go to Step 3.
The driver's door switch signal is not received. : Refer to inspection procedure P-5 "The driver's door switch signal is not received <LH drive vehicles>P.54B-333 or <RH drive vehicles>P.54B-335 ."
The key reminder switch signal is not received. : Refer to inspection procedure P-10 "The key reminder switch signal is not received P.54B-350."
The driver's door lock actuator switch signal is not received. : Refer to inspection procedure P-13 "The driver's door lock actuator signal is not received <LH drive vehicles>P.54B-364 or <RH drive vehicles>P.54B-367 ."

Step 3. Retest the system.

Q: Does the ignition key reminder buzzer function work normally?
YES : The trouble can be an intermittent malfunction (Refer to GROUP 00 – How to Cope with Intermittent Malfunction P.00-5).
NO : Replace the ETACS-ECU.

Main Index
Group TOC

INSPECTION PROCEDURE C-6: A door can not be locked or unlocked by the central door locking system. <LH drive vehicles>

Central Door Lock Circuit <LHD>

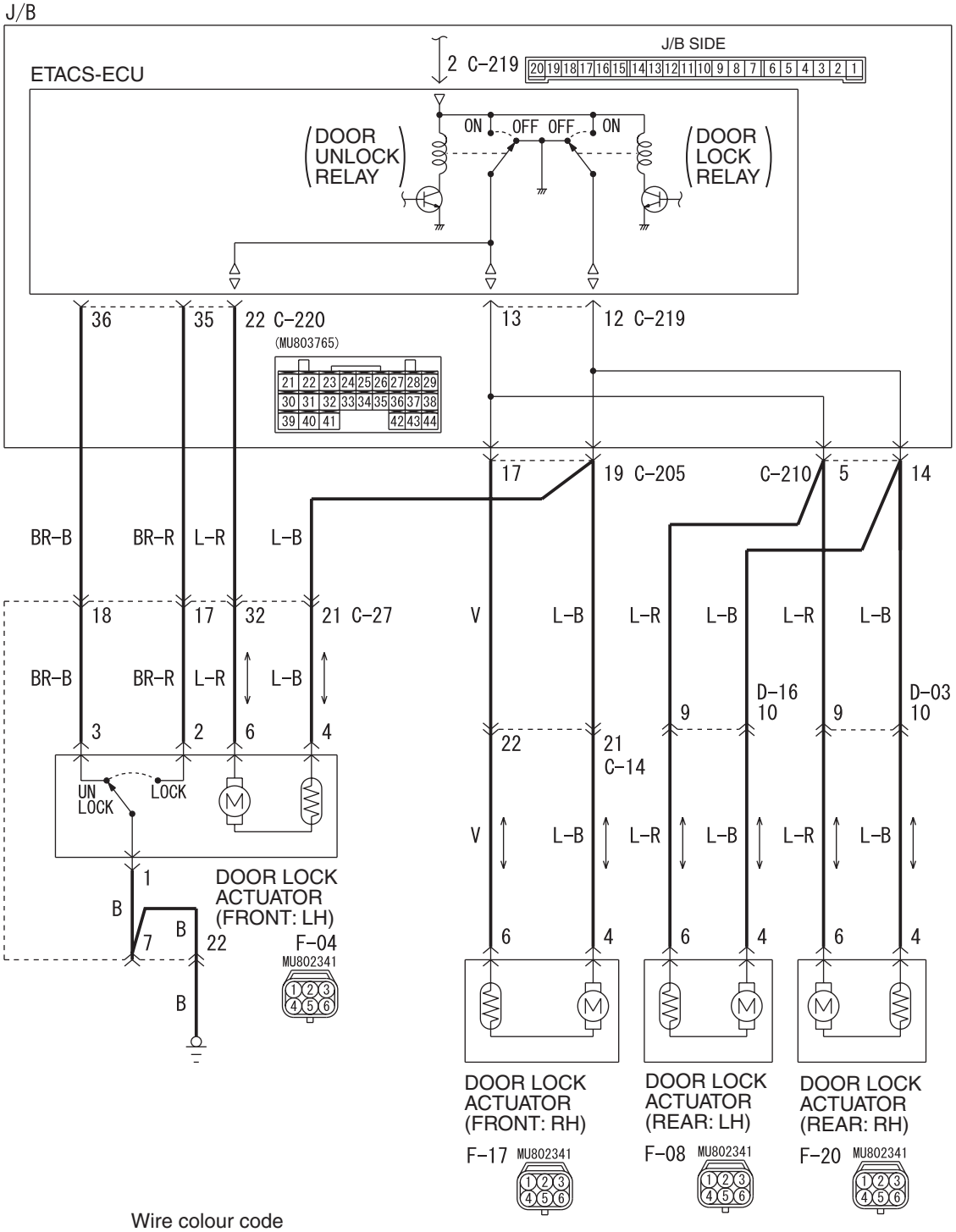

Wire colour code
B : Black LG : Light green G : Green L : Blue W : White Y : Yellow SB : Sky blue
BR : Brown O : Orange GR : Gray R : Red P : Pink V : Violet

W4X54E042A

Main Index
Group TOC

COMMENT ON TROUBLE SYMPTOM

If a door can not be locked or unlocked by the central door locking system, the door lock actuator may be defective.

POSSIBLE CAUSES

- Malfunction of the door lock actuator
- Damaged harness wires and connectors

DIAGNOSIS PROCEDURE

Step 1. Confirm which door lock actuator is defective.

Q: Which door fails to lock correctly?
Driver's door : Go to Step 2.
Front passenger's door : Go to Step 6.
Rear right door : Go to Step 10.
Rear left door : Go to Step 14.

Step 2. Connector check: F-04 door lock actuator (front: LH) connector

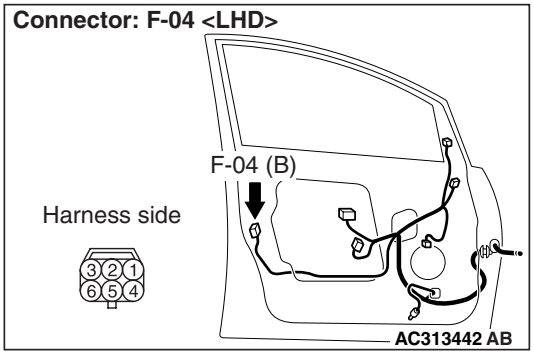

Q: Is the check result normal?
YES : Go to Step 3.
NO : Repair the defective connector.

Step 3. Check the door lock actuator (front: LH)

Check that the door lock actuator (front: LH) works normally. Refer to GROUP 42 – Door P.42-45.

Q: Is the check result normal?
YES : Go to Step 4.
NO : Replace the door lock actuator (front: LH).

Step 4. Connector check: C-219, C-220 ETACS-ECU connector

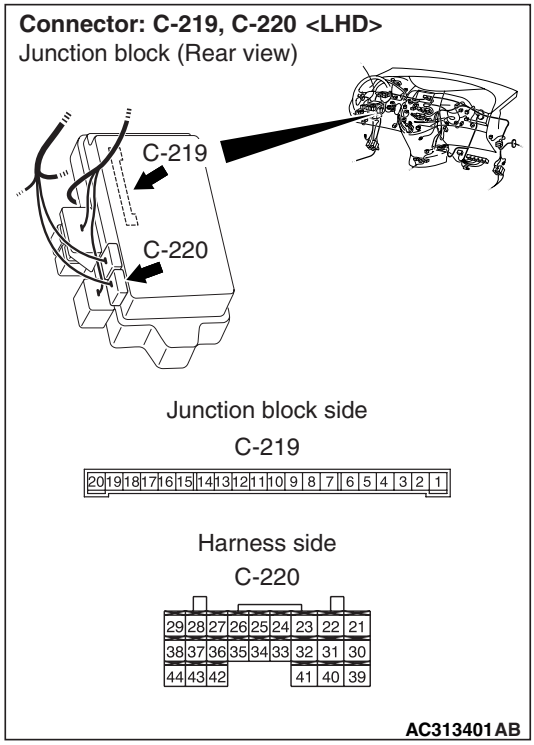

Q: Is the check result normal?
YES : Go to Step 5.
NO : Repair the defective connector.

Step 5. Check the wiring harness from C-219 ETACS-ECU connector terminal No.12 and C-220 ETACS-ECU connector No.22 to F-04 door lock actuator (front: LH) connector terminal Nos. 4 and 6.

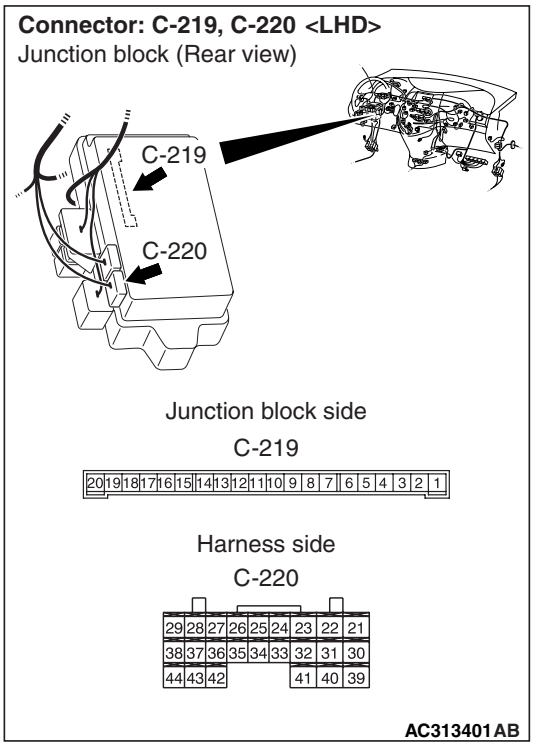

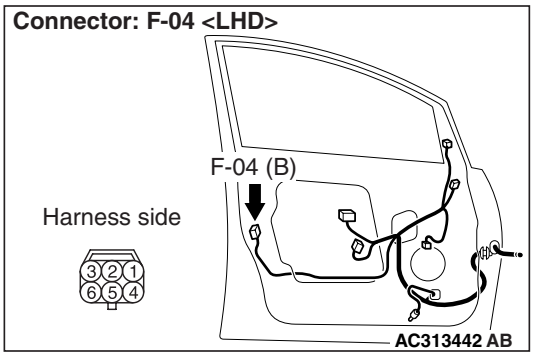

NOTE:

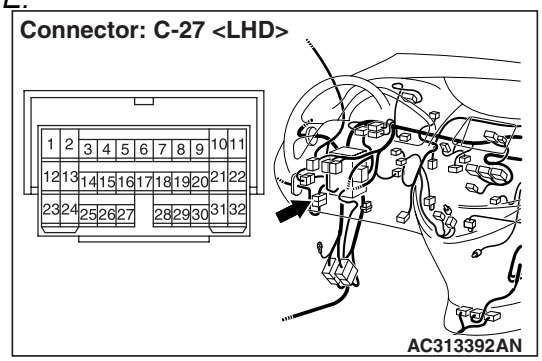

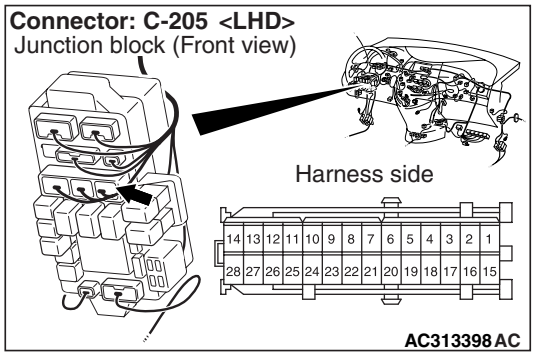

Prior to the wiring harness inspection, check intermediate connector C-27 and junction block connector C-205, and repair if necessary.

- Check the input and output lines for open circuit.

Q: Is the check result normal?

YES : The trouble can be an intermittent malfunction (Refer to GROUP 00 – How to Cope with Intermittent Malfunction P.00-5).

NO : Repair the wiring harness.

Step 6. Connector check: F-17 door lock actuator (front: RH) connector

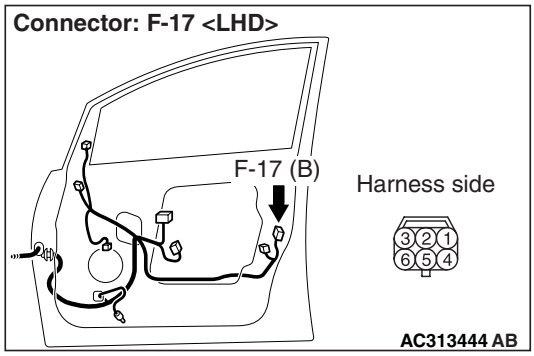

Q: Is the check result normal?

YES : Go to Step 7.

NO : Repair the defective connector.

Step 7. Check the door lock actuator (front: RH).

Check that the door lock actuator (front: RH) works normally. Refer to GROUP 42 – Door P.42-45.

Q: Is the check result normal?

YES : Go to Step 8.

NO : Replace the door lock actuator (front: RH).

Main Index
Group TOC

Step 8. Connector check: C-219 ETACS-ECU connector

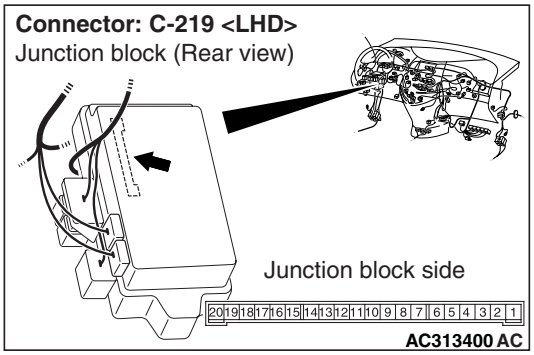

Q: Is the check result normal?
YES : Go to Step 9.
NO : Repair the defective connector.

Step 9. Check the wiring harness from C-219 ETACS-ECU connector terminal Nos. 12 and 13 to F-17 door lock actuator (front: RH) connector terminal Nos. 4 and 6.

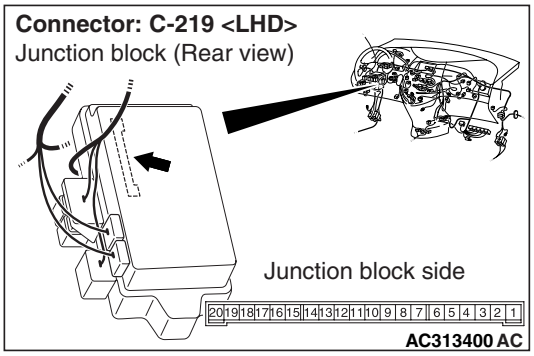

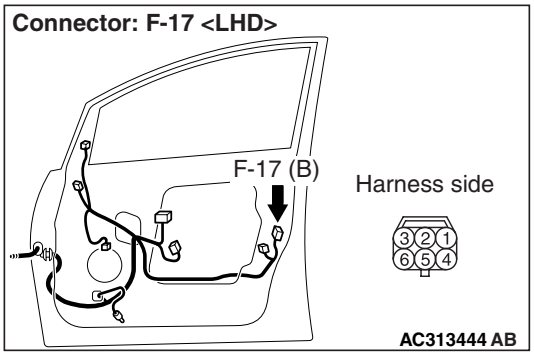

NOTE:

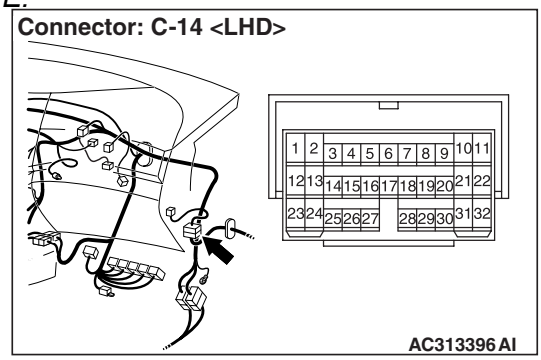

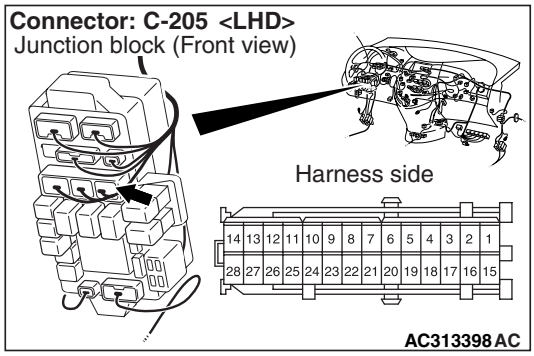

Prior to the wiring harness inspection, check intermediate connector C-14 and junction block connector C-205, and repair if necessary.

- Check the input and output lines for open circuit.

Q: Is the check result normal?
YES : The trouble can be an intermittent malfunction (Refer to GROUP 00 – How to Cope with Intermittent Malfunction P.00-5).
NO : Repair the wiring harness.

Step 10. Connector check: F-20 door lock actuator (rear: RH) connector

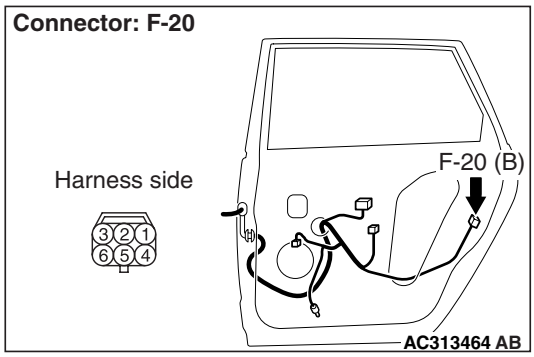

Q: Is the check result normal?
YES : Go to Step 11.
NO : Repair the defective connector.

Main Index
Group TOC

Step 11. Check the door lock actuator (rear: RH).
Check that the door lock actuator (rear: RH) is in good condition. Refer to GROUP 42 – Door P.42-45.

Q: Is the check result normal?
YES : Go to Step 12.
NO : Replace the door lock actuator (rear: RH).

Step 12. Connector check: C-219 ETACS-ECU connector

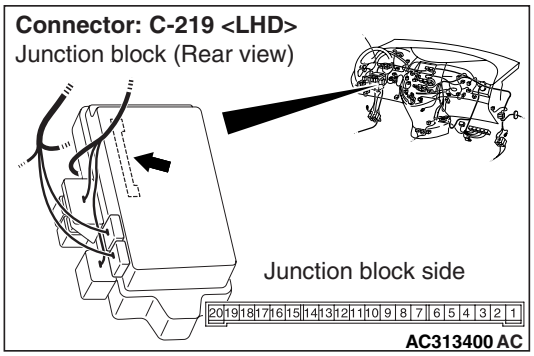

Q: Is the check result normal?
YES : Go to Step 13.
NO : Repair the defective connector.

Step 13. Check the wiring harness from C-219 ETACS-ECU connector terminal Nos. 12 and 13 to F-20 door lock actuator (rear: RH) connector terminal Nos. 4 and 6.

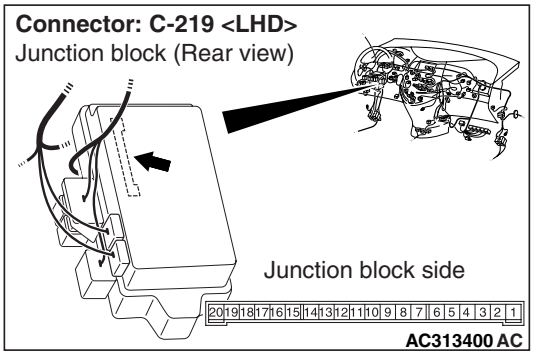

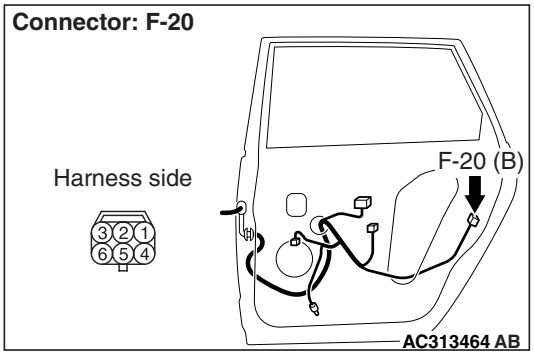

NOTE:

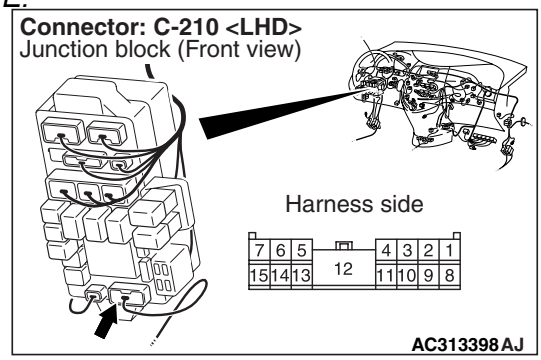

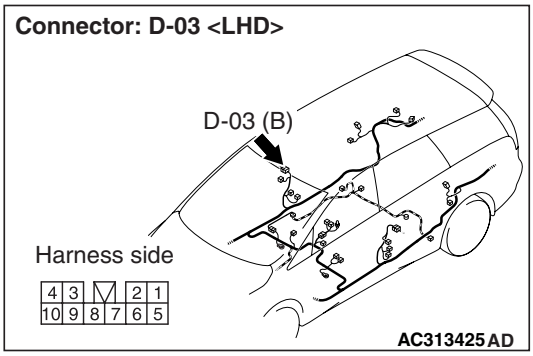

Prior to the wiring harness inspection, check intermediate connector D-03 and junction block connector C-210, and repair if necessary.

- Check the input and output lines for open circuit.

Q: Is the check result normal?
YES : The trouble can be an intermittent malfunction (Refer to GROUP 00 – How to Cope with Intermittent Malfunction P.00-5).
NO : Repair the wiring harness.

Step 14. Connector check: F-08 door lock actuator (rear: LH) connector

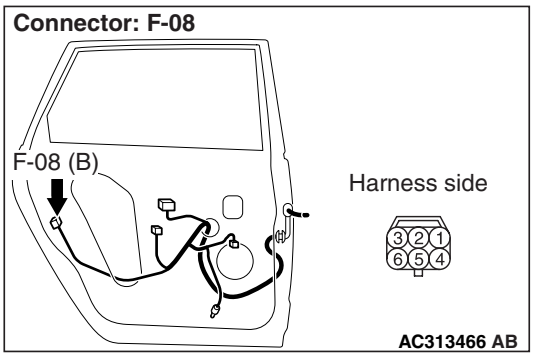

Q: Is the check result normal?
YES : Go to Step 15.
NO : Repair the defective connector.

Main Index
Group TOC

Step 15. Check the door lock actuator (rear: LH).
Check that the door lock actuator (rear: LH) is in good condition. Refer to GROUP 42 – Door P.42-45.

Q: Is the check result normal?
YES : Go to Step 16.
NO : Replace the door lock actuator (rear: LH).

Step 16. Connector check: C-219 ETACS-ECU connector

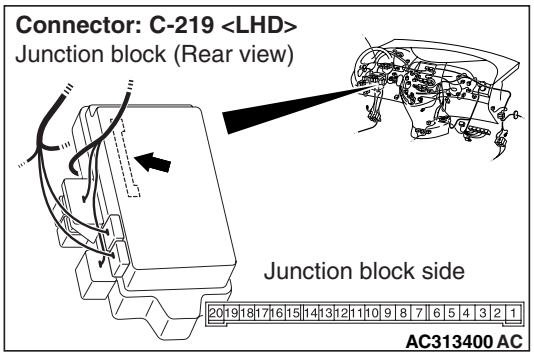

Q: Is the check result normal?
YES : Go to Step 17.
NO : Repair the defective connector.

Step 17. Check the wiring harness from C-219 ETACS-ECU connector terminal Nos. 12 and 13 to F-08 door lock actuator (rear: LH) connector terminal Nos. 4 and 6.

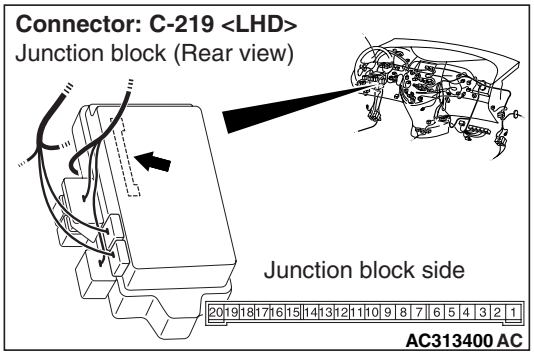

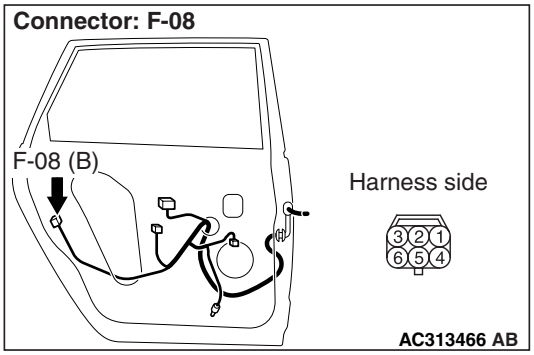

NOTE:

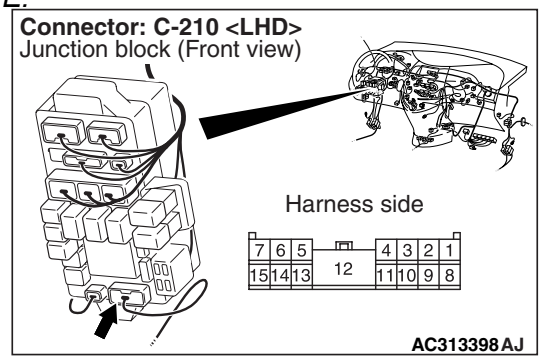

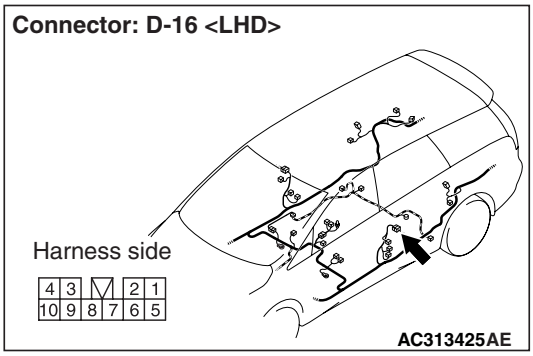

Prior to the wiring harness inspection, check intermediate connector D-16 and junction block connector C-210, and repair if necessary.

- Check the input and output lines for open circuit.

Q: Is the check result normal?
YES : The trouble can be an intermittent malfunction (Refer to GROUP 00 – How to Cope with Intermittent Malfunction P.00-5).
NO : Repair the wiring harness.

Main Index
Group TOC

INSPECTION PROCEDURE C-6: A door can not be locked or unlocked by the central door locking system. <RH drive vehicles>

Central Door Lock Circuit <RHD>

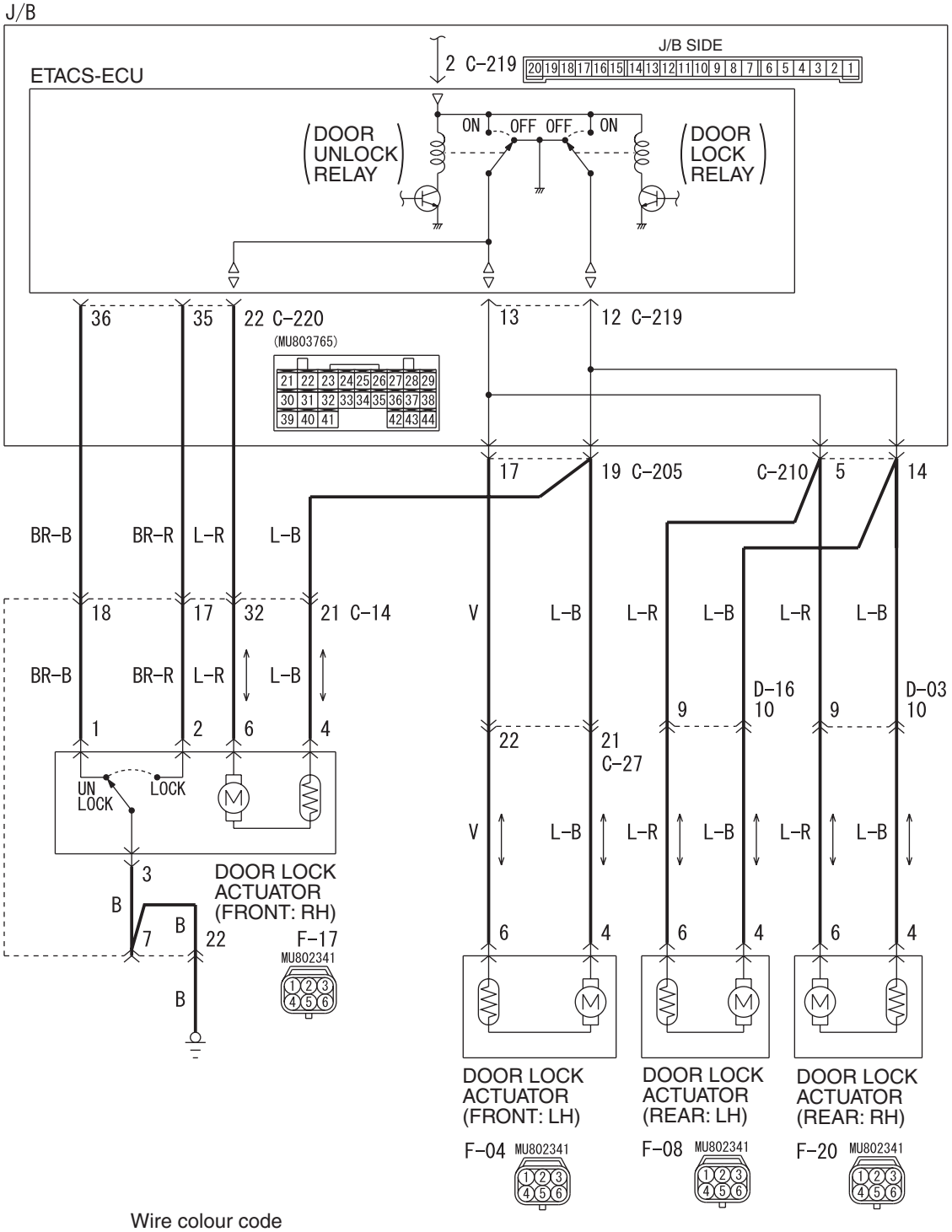

Wire colour code
B : Black LG : Light green G : Green L : Blue W : White Y : Yellow SB : Sky blue
BR : Brown O : Orange GR : Gray R : Red P : Pink V : Violet

W4X54E043A

Main Index
Group TOC

COMMENT ON TROUBLE SYMPTOM

If a door can not be locked or unlocked by the central door locking system, the door lock actuator may be defective.

POSSIBLE CAUSES

- Malfunction of the door lock actuator
- Damaged harness wires and connectors

DIAGNOSIS PROCEDURE

Step 1. Confirm which door lock actuator is defective.

Q: Which door fails to lock correctly?
Driver's door : Go to Step 2.
Front passenger's door : Go to Step 6.
Rear right door : Go to Step 10.
Rear left door : Go to Step 14.

Step 2. Connector check: F-17 door lock actuator (front: RH) connector

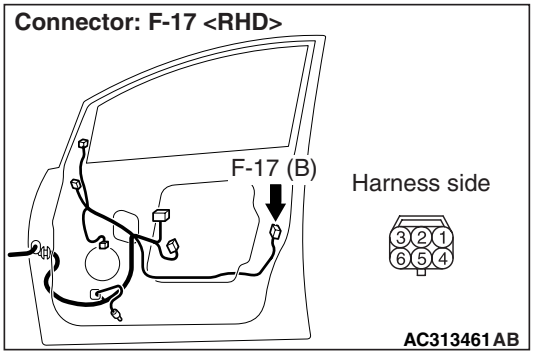

Q: Is the check result normal?
YES : Go to Step 3.
NO : Repair the defective connector.

Step 3. Check the door lock actuator (front: RH)

Check that the door lock actuator (front: RH) works normally. Refer to GROUP 42 – Door P.42-45.

Q: Is the check result normal?
YES : Go to Step 4.
NO : Replace the door lock actuator (front: RH).

Step 4. Connector check: C-219, C-220 ETACS-ECU connector

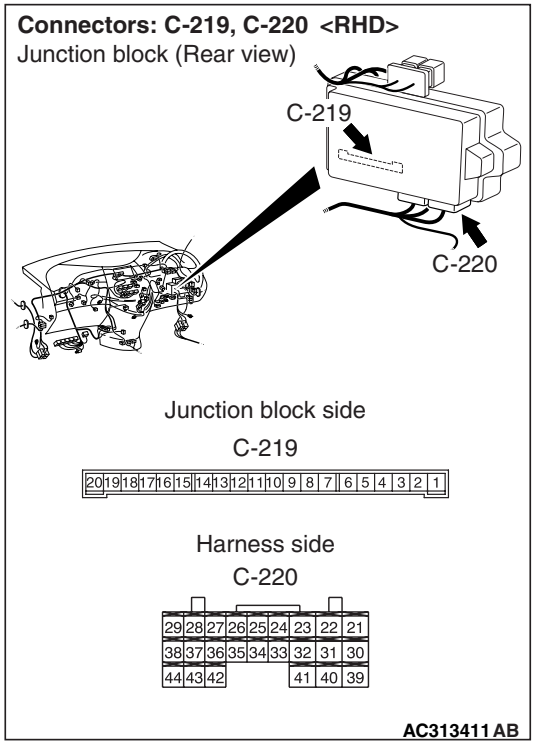

Q: Is the check result normal?
YES : Go to Step 5.
NO : Repair the defective connector.

Step 5. Check the wiring harness from C-219 ETACS-ECU connector terminal No.12 and C-220 ETACS-ECU connector No.22 to F-17 door lock actuator (front: RH) connector terminal Nos. 4 and 6.

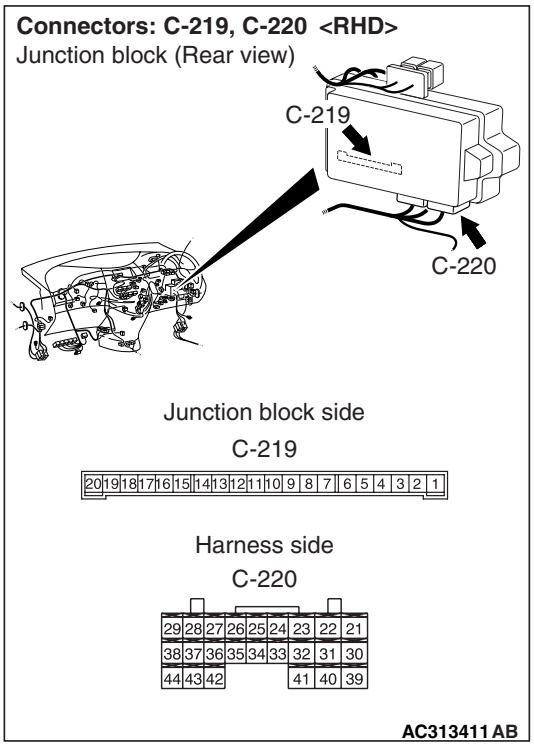

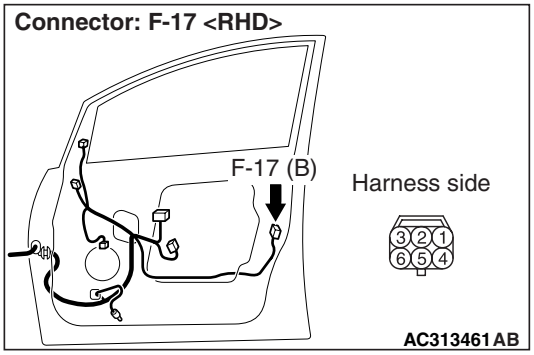

NOTE:

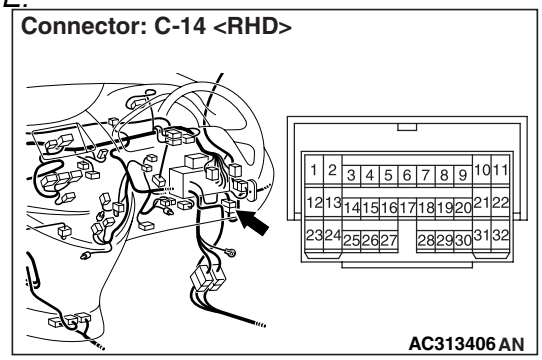

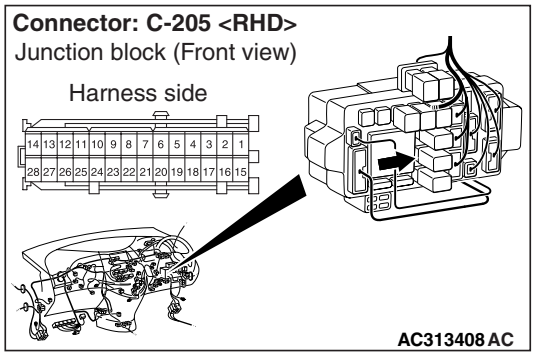

Prior to the wiring harness inspection, check intermediate connector C-14 and junction block connector C-205, and repair if necessary.

- Check the input and output lines for open circuit.

Q: Is the check result normal?

YES : The trouble can be an intermittent malfunction (Refer to GROUP 00 – How to Cope with Intermittent Malfunction P.00-5).

NO : Repair the wiring harness.

Step 6. Connector check: F-04 door lock actuator (front: LH) connector

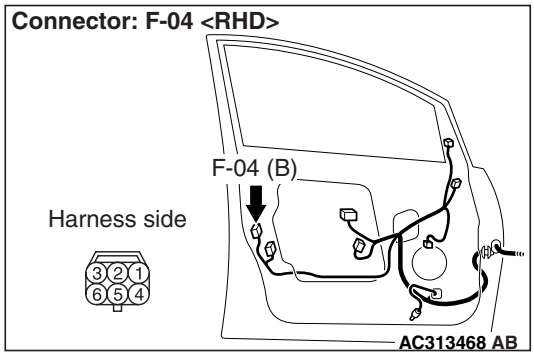

Q: Is the check result normal?

YES : Go to Step 7.

NO : Repair the defective connector.

Step 7. Check the door lock actuator (front: LH).

Check that the door lock actuator (front: LH) works normally. Refer to GROUP 42 – Door P.42-45.

Q: Is the check result normal?

YES : Go to Step 8.

NO : Replace the door lock actuator (front: LH).

Main Index
Group TOC

Step 8. Connector check: C-219 ETACS-ECU connector

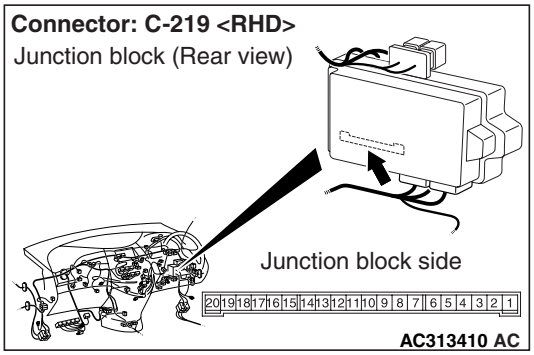

Q: Is the check result normal?
YES : Go to Step 9.
NO : Repair the defective connector.

Step 9. Check the wiring harness from C-219 ETACS-ECU connector terminal Nos. 12 and 13 to F-04 door lock actuator (front: LH) connector terminal Nos. 4 and 6.

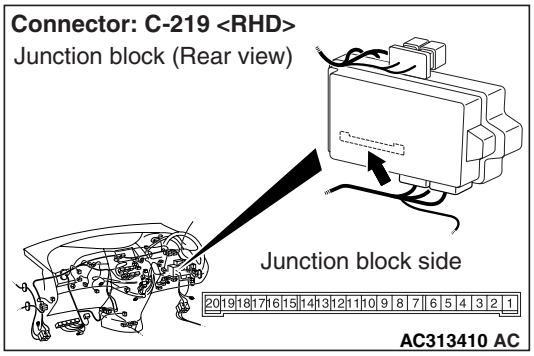

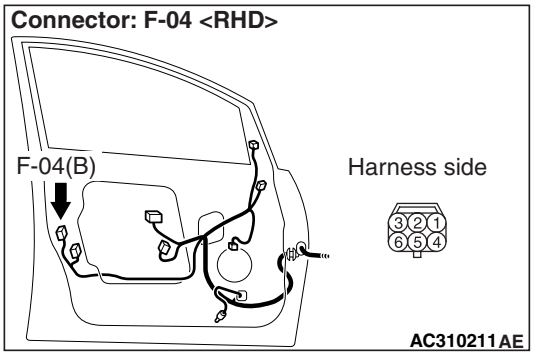

NOTE:

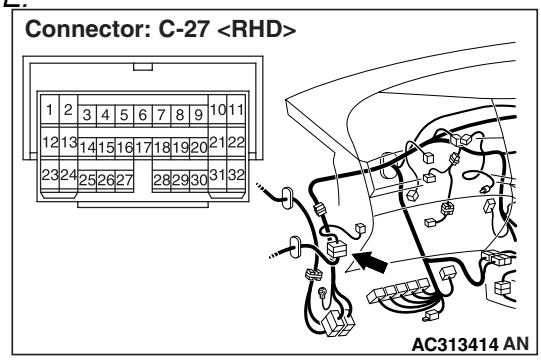

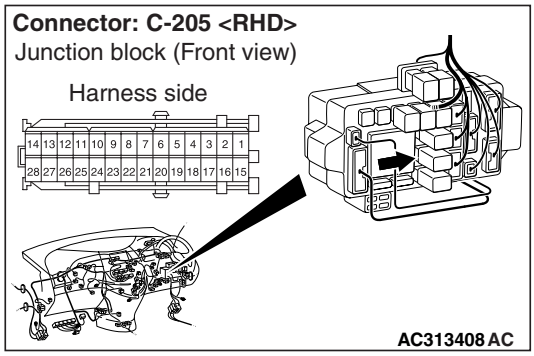

Prior to the wiring harness inspection, check intermediate connector C-27 and junction block connector C-205, and repair if necessary.

- Check the input and output lines for open circuit.

Q: Is the check result normal?
YES : The trouble can be an intermittent malfunction (Refer to GROUP 00 – How to Cope with Intermittent Malfunction P.00-5).
NO : Repair the wiring harness.

Step 10. Connector check: F-20 door lock actuator (rear: RH) connector

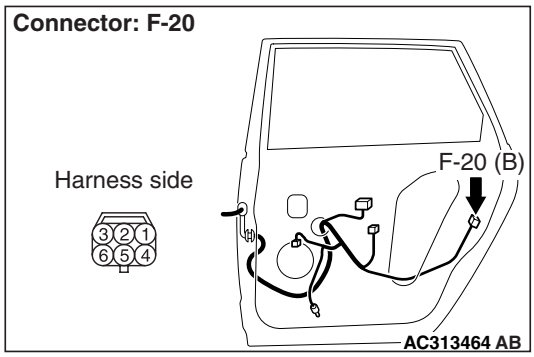

Q: Is the check result normal?
YES : Go to Step 11.
NO : Repair the defective connector.

Step 11. Check the door lock actuator (rear: RH).
Check that the door lock actuator (rear: RH) is in good condition. Refer to GROUP 42 – Door P.42-45.

Q: Is the check result normal?
YES : Go to Step 12.
NO : Replace the door lock actuator (rear: RH).

Step 12. Connector check: C-219 ETACS-ECU connector

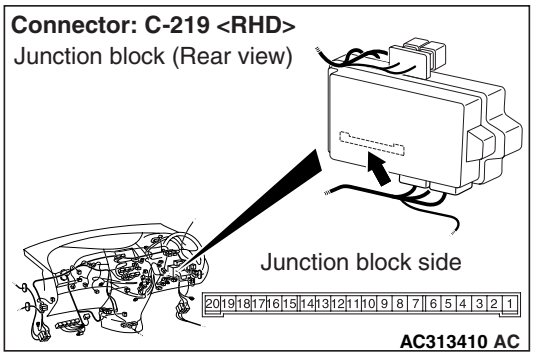

Q: Is the check result normal?
YES : Go to Step 13.
NO : Repair the defective connector.

Step 13. Check the wiring harness from C-219 ETACS-ECU connector terminal Nos. 12 and 13 to F-20 door lock actuator (rear: RH) connector terminal Nos. 4 and 6.

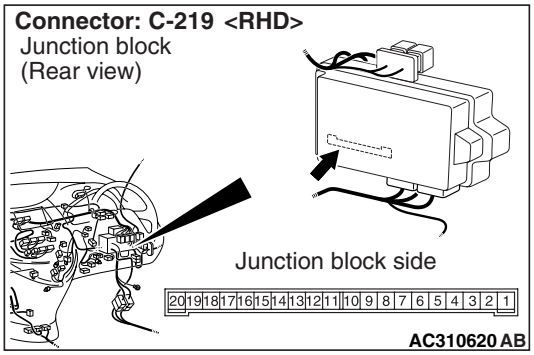

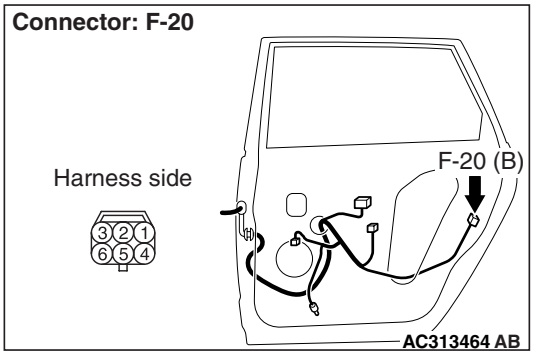

NOTE:

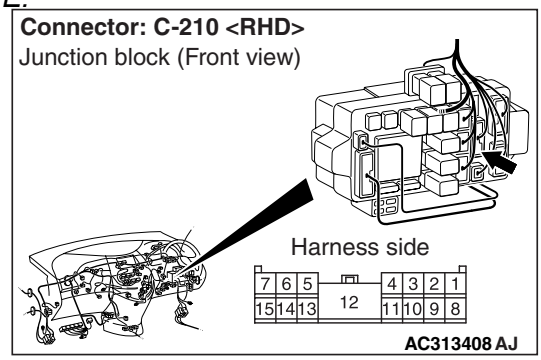

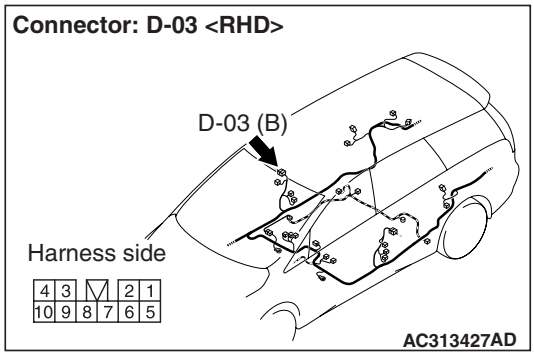

Prior to the wiring harness inspection, check intermediate connector D-03 and junction block connector C-210, and repair if necessary.

- Check the input and output lines for open circuit.

Q: Is the check result normal?
YES : The trouble can be an intermittent malfunction (Refer to GROUP 00 – How to Cope with Intermittent Malfunction P.00-5).
NO : Repair the wiring harness.

Step 14. Connector check: F-08 door lock actuator (rear: LH) connector

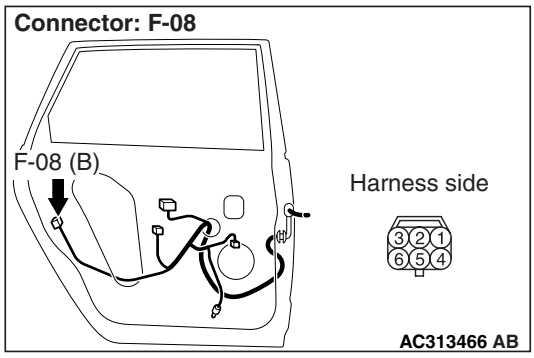

Q: Is the check result normal?
YES : Go to Step 15.
NO : Repair the defective connector.

Main Index
Group TOC

Step 15. Check the door lock actuator (rear: LH).
Check that the door lock actuator (rear: LH) is in good condition. Refer to GROUP 42 – Door P.42-45.

Q: Is the check result normal?
YES : Go to Step 16.
NO : Replace the door lock actuator (rear: LH).

Step 16. Connector check: C-219 ETACS-ECU connector

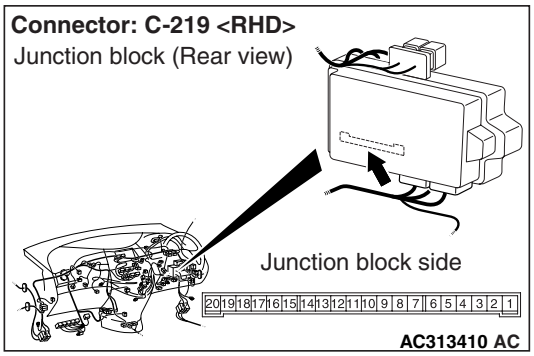

Q: Is the check result normal?
YES : Go to Step 17.
NO : Repair the defective connector.

Step 17. Check the wiring harness from C-219 ETACS-ECU connector terminal Nos. 12 and 13 to F-08 door lock actuator (rear: LH) connector terminal Nos. 4 and 6.

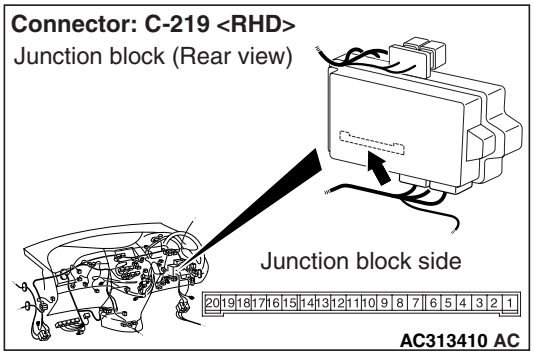

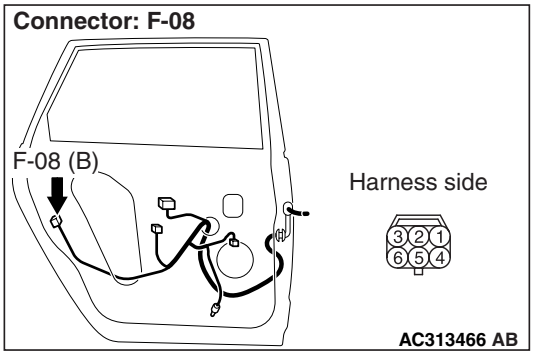

NOTE:

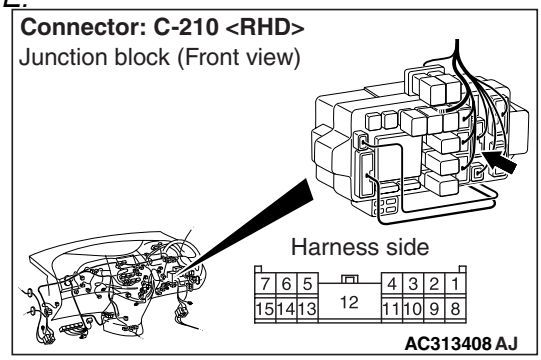

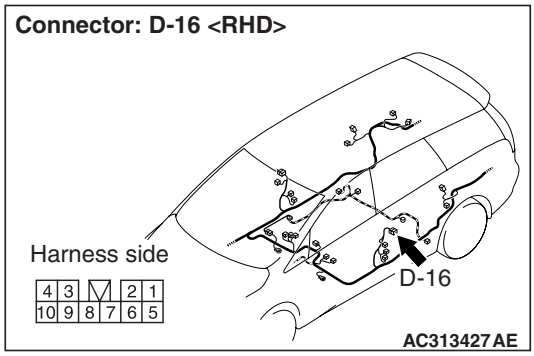

Prior to the wiring harness inspection, check intermediate connectors D-16 and junction block connector C-210, and repair if necessary.

- Check the input and output lines for open circuit.

Q: Is the check result normal?
YES : The trouble can be an intermittent malfunction (Refer to GROUP 00 – How to Cope with Intermittent Malfunction P.00-5).
NO : Repair the wiring harness.

INSPECTION PROCEDURE C-7: The tailgate cannot be opened or closed.

Tailgate Open Circuit

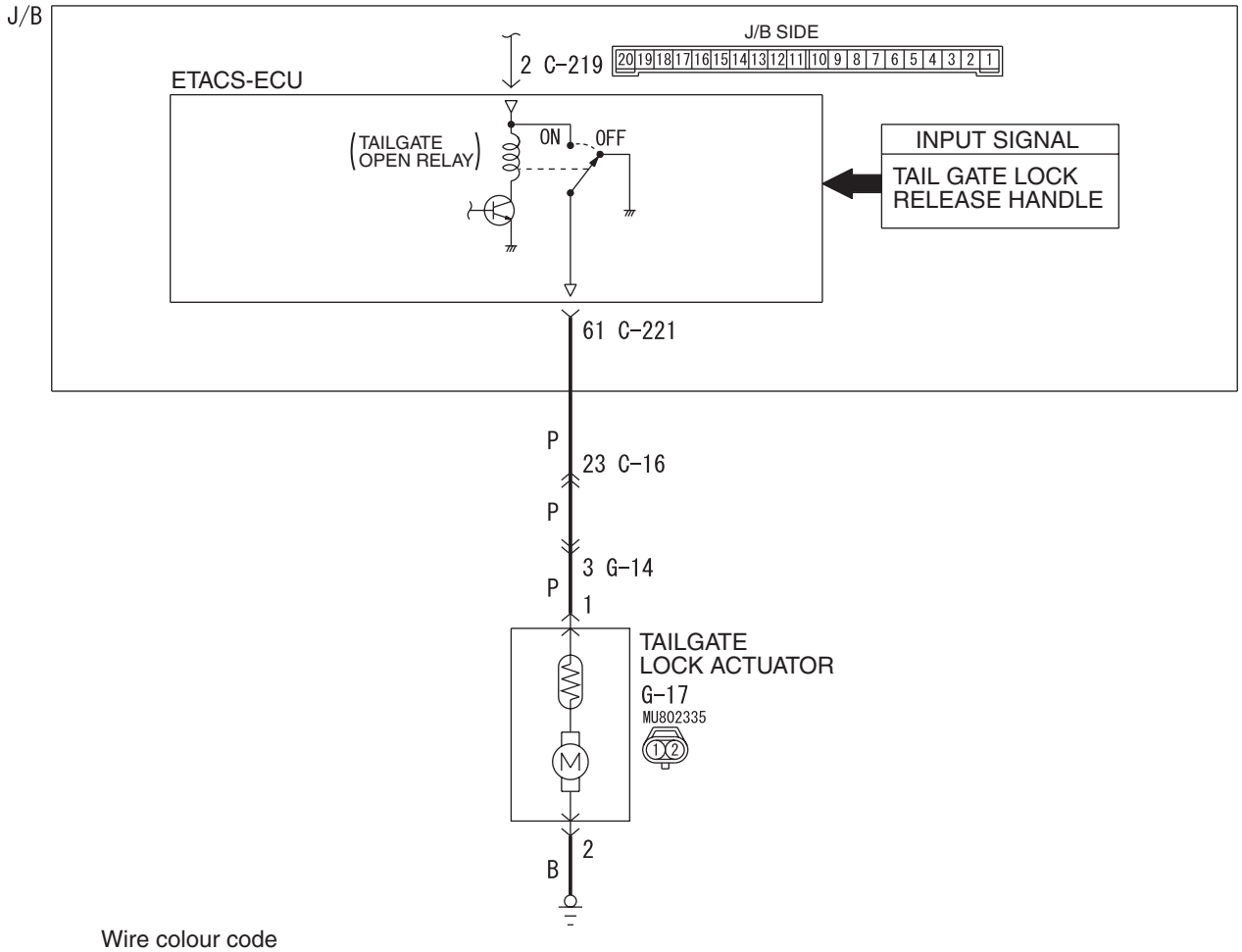

Wire colour code
B : Black LG : Light green G : Green L : Blue W : White Y : Yellow SB : Sky blue
BR : Brown O : Orange GR : Gray R : Red P : Pink V : Violet

W4X54E148A

COMMENT ON TROUBLE SYMPTOM

If the tailgate can not be locked or unlocked by the central door locking system, the tailgate lock actuator or the ETACS-ECU may be defective.

PROBABLE CAUSES

- Malfunction of the tailgate lock actuator
- Malfunction of the ETACS-ECU
- Damaged harness wires and connectors

DIAGNOSIS PROCEDURE

Step 1. Check that the central door locking system and the keyless entry system operate.

Check that the doors (excluding the tailgate) are locked and unlocked normally when the central door locking and keyless entry systems are operated.

Q: Is the check result normal?

YES : Go to Step 2.

NO : <If the central door locking system does not work normally> Refer to Inspection Procedure C-1 "Central door locking system does not work P.54B-87." <If the keyless entry system does not work normally> Refer to Inspection Procedure E-1 "Keyless entry system does not work P.54B-148 ."

Main Index
Group TOC

Step 2. Pulse check

Check the input signals which are related to the tailgate opening and closing.

System switch	Check condition
Ignition switch (IG1)	When turned from ACC to ON
Tailgate lock release handle	When turned from OFF to ON

OK: The M.U.T.-III sounds or the voltmeter needle fluctuates.

Q: Is the check result normal?

All the signals are received normally. : Go to Step 3.

The ignition switch (IG1) signal is not received. : Refer to Inspection Procedure P-2 "The ignition switch (IG1) signal is not received P.54B-322."

The Tailgate lock release handle signal is not received. : Refer to Inspection Procedure P-16 "The Tailgate lock release handle signal is not received P.54B-380."

Step 3. Connector check: G-17 tailgate lock actuator connector

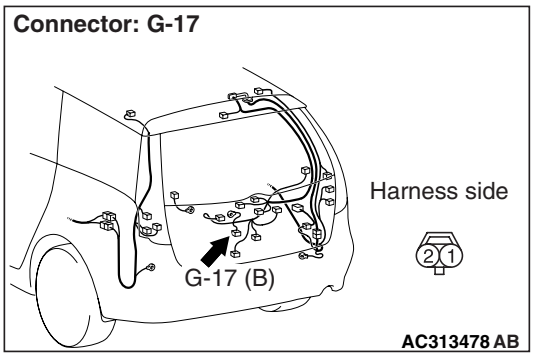

Q: Is the check result normal?

YES : Go to Step 4.

NO : Repair the defective connector.

Step 4. Check the tailgate lock actuator.

Check that the tailgate lock actuator is in good condition. Refer to GROUP 42 – Tailgate P.42-60.

Q: Is the check result normal?

YES : Go to Step 5.

NO : Replace the tailgate lock actuator.

Step 5. Resistance measurement at the G-17 tailgate lock actuator connector.

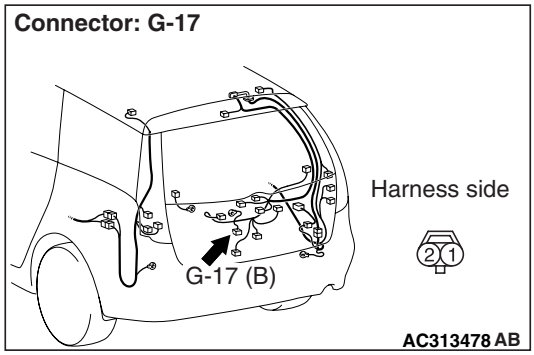

(1) Disconnect the connector, and measure at the wiring harness side.

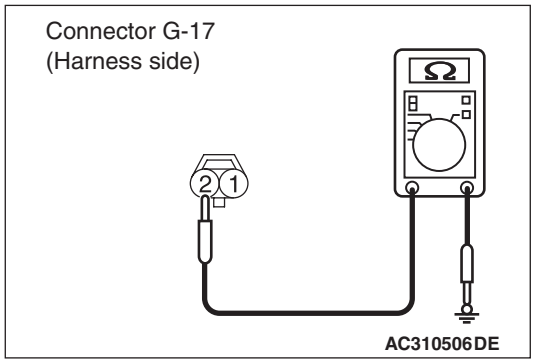

(2) Resistance between G-17 tailgate lock actuator connector terminal No.2 and body earth

OK: 2 Ω or less

Q: Is the check result normal?

YES : Go to Step 7.

NO : Go to Step 6.

Step 6. Check the wiring harness between G-17 tailgate lock actuator connector terminal No.2 to the body earth.

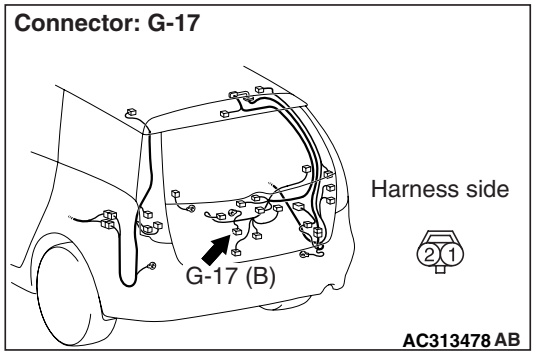

- Check the earth wires for open circuit.

Q: Is the check result normal?

YES : The trouble can be an intermittent malfunction (Refer to GROUP 00 – How to Cope with Intermittent Malfunction P.00-5).

NO : Repair the wiring harness.

Main Index
Group TOC

Step 7. Connector check: C-221 ETACS-ECU connector

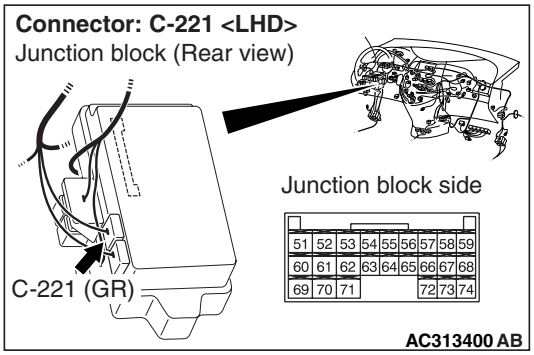

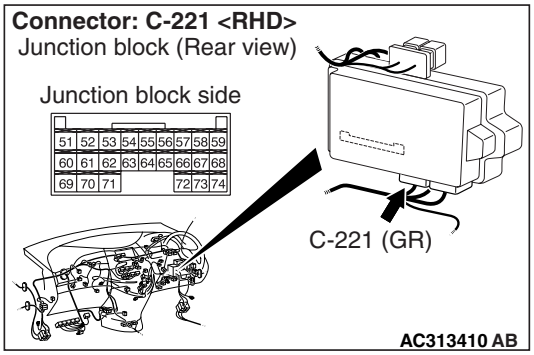

Q: Is the check result normal?

YES : Go to Step 8.

NO : Repair the defective connector.

Step 8. Check the wiring harness from C-221 ETACS-ECU connector terminal No.61 to G-17 tailgate lock actuator connector terminal No.1.

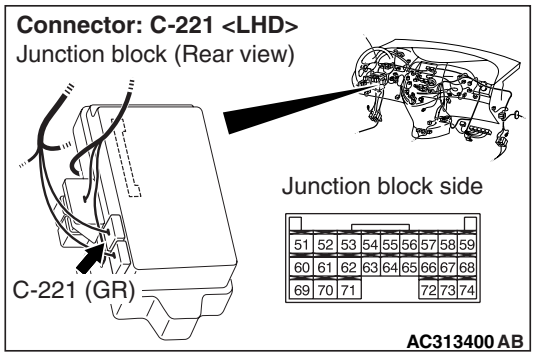

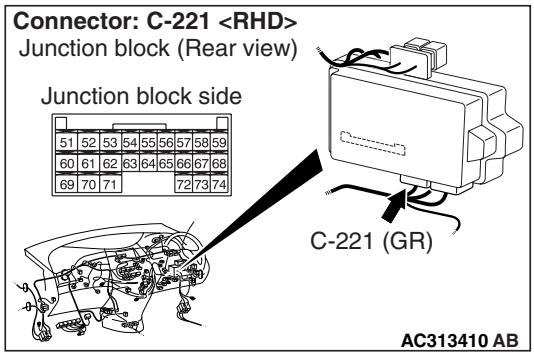

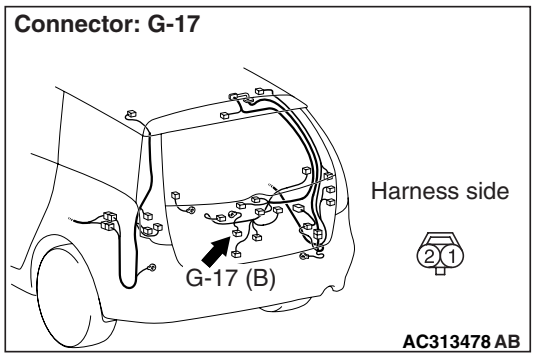

NOTE:

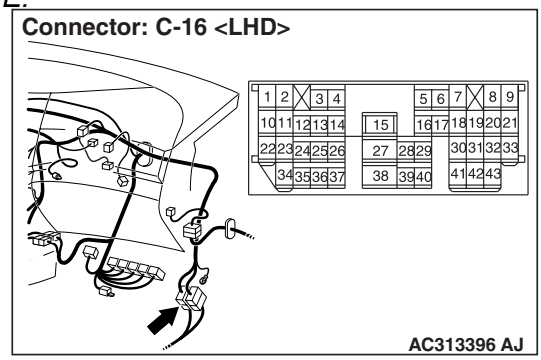

Main Index
Group TOC

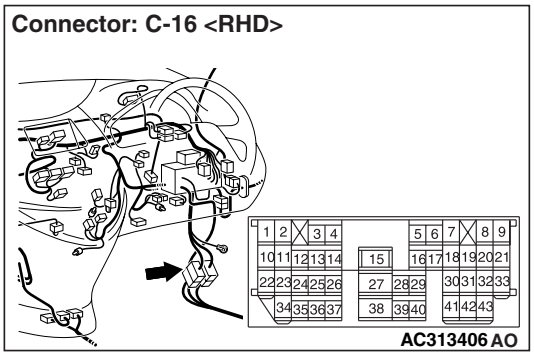

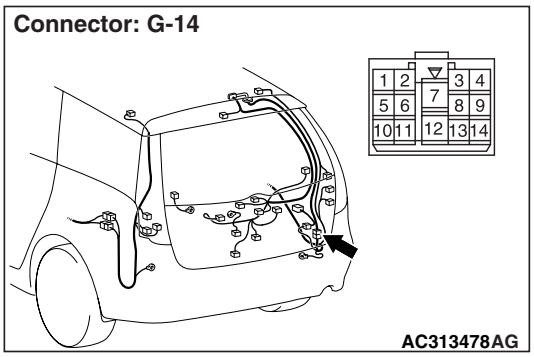

Prior to the wiring harness inspection, check intermediate connector C-16, G-14, and repair if necessary.

- Check the input and output lines for open circuit.

Q: Is the check result normal?

YES : Go to Step 9.

NO : Repair the wiring harness.

Step 9. Retest the system.

Check that the tailgate lock works normally.

Q: Is the check result normal?

YES : The trouble can be an intermittent malfunction (Refer to GROUP 00 – How to Cope with Intermittent Malfunction P.00-5).

NO : Replace the ETACS-ECU.

Main Index
Group TOC

POWER WINDOW

INSPECTION PROCEDURE D-1: Power windows do not work at all.

⚠ CAUTION

Whenever the ECU is replaced, ensure that the input and output signal circuits are normal.

Power Window Relay Circuit

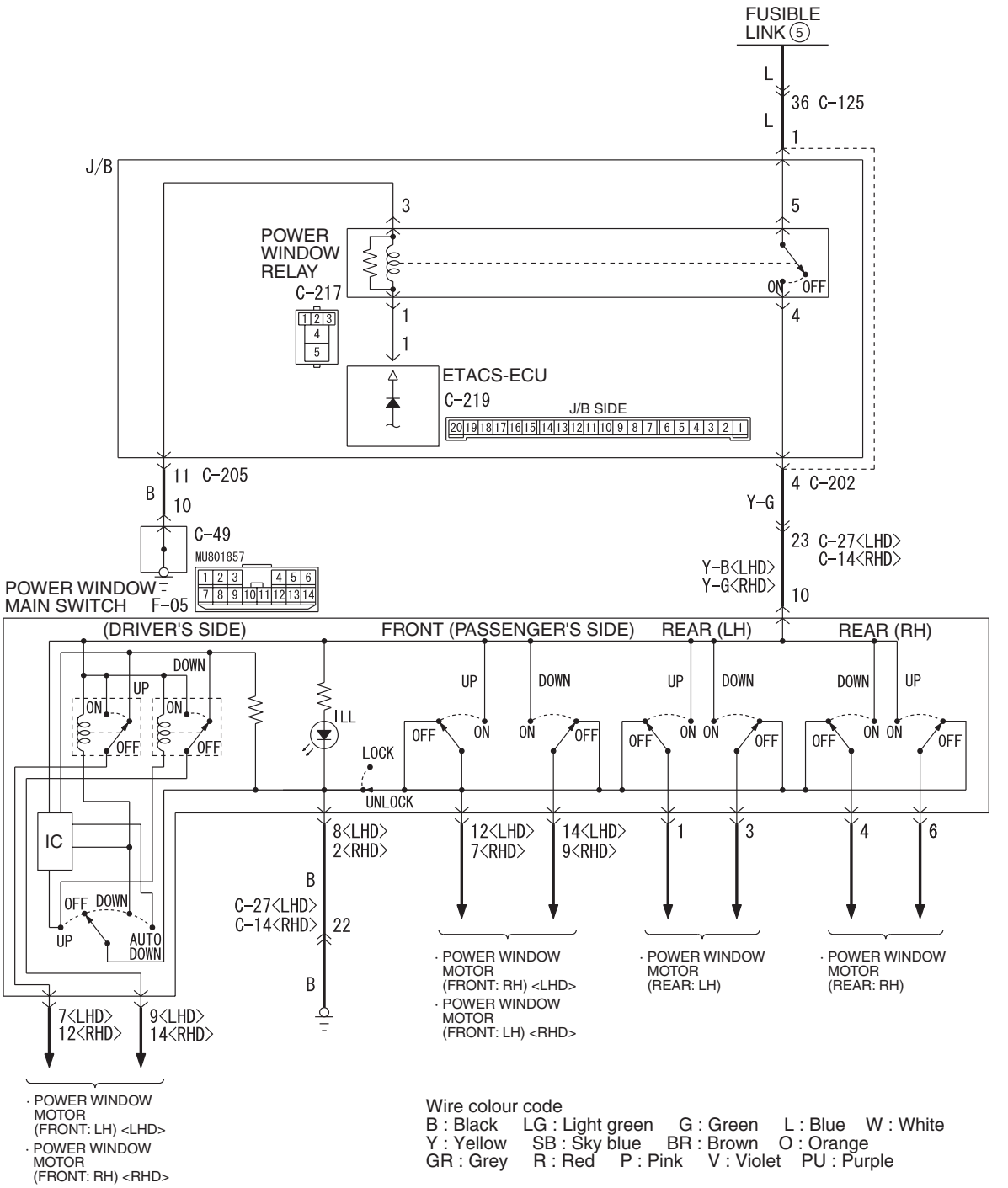

Main Index
Group TOC

COMMENTS ON TROUBLE SYMPTOM

If the power windows do not work at all, the power window relay, the power window main switch or the ETACS-ECU may be defective.

POSSIBLE CAUSES

- Malfunction of the power window relay
- Malfunction of the power window main switch
- Malfunction of the ETACS-ECU
- Damaged harness wires and connectors

DIAGNOSIS PROCEDURE

Step 1. Pulse check

Check the input signal from the ignition switch.

System switch	Check condition
Ignition switch (IG1)	When turned from ACC to ON

OK: The M.U.T.-III sounds or the voltmeter needle fluctuates.

Q: Is the check result normal?

YES : Go to Step 2.

NO : Refer to inspection procedure A-2 "When the ignition switch is at the LOCK (OFF) position, the functions do not work normally. Check the battery power supply circuit to the ETACS-ECU P.54B-71."

Step 2. Connector check: C-217 power window relay connector

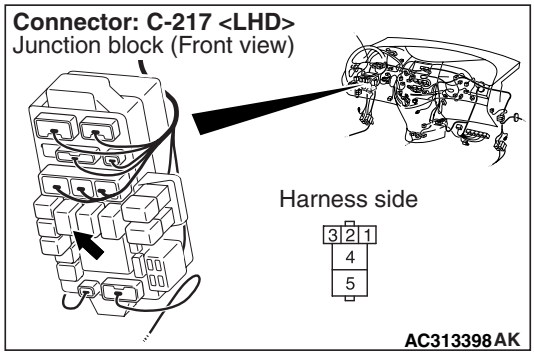

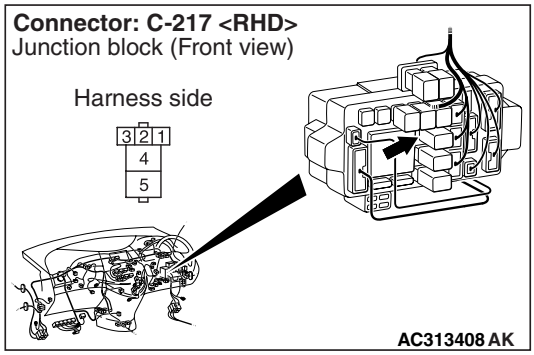

Q: Is the check result normal?

YES : Go to Step 3.

NO : Repair the connector.

Step 3. Check the power window relay.

Refer to GROUP 42 – Door – On-vehicle Service P.42-32.

Q: Is the check result normal?

YES : Go to Step 4.

NO : Replace the power window relay.

Main Index
Group TOC

Step 4. Connector check: F-05 power window main switch connector

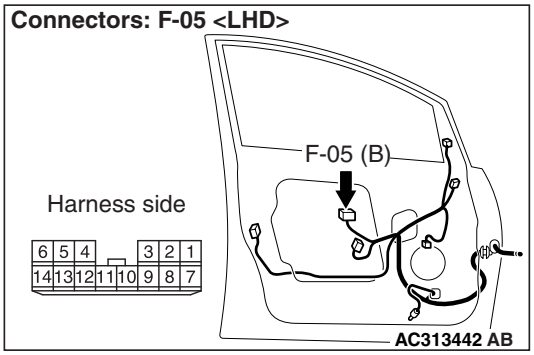

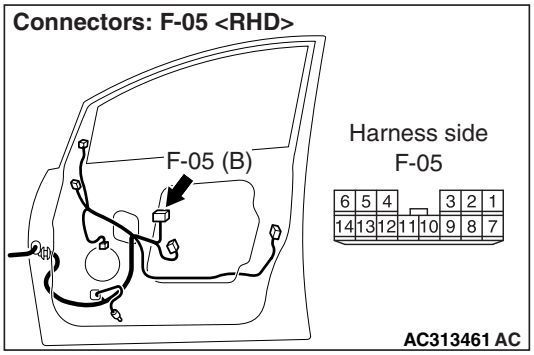

Q: Is the check result normal?
YES : Go to Step 5.
NO : Repair the connector.

Step 5. Check the power window main switch

Check that the power window main switch works normally. Refer to GROUP 42 – Door P.42-39.

Q: Is the check result normal?
YES : Go to Step 6.
NO : Replace the power window main switch.

Step 6. Voltage measurement at the F-05 power window main switch connector.

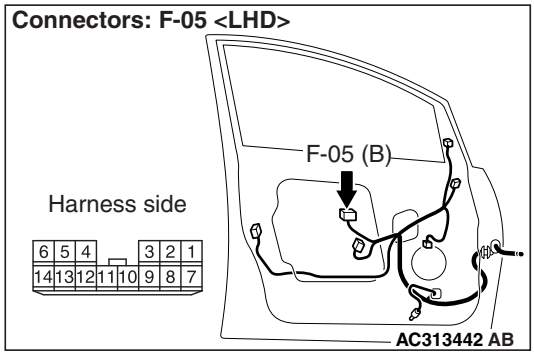

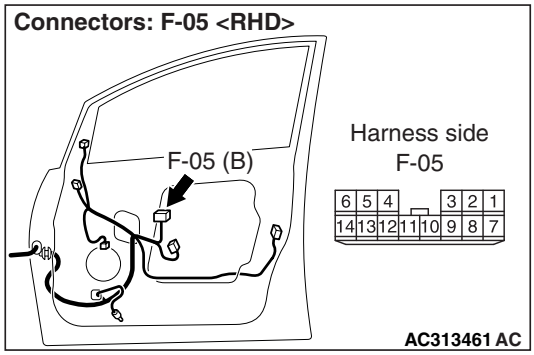

(1) Disconnect the connector, and measure at the wiring harness side.
(2) Turn the ignition switch to the ON position.

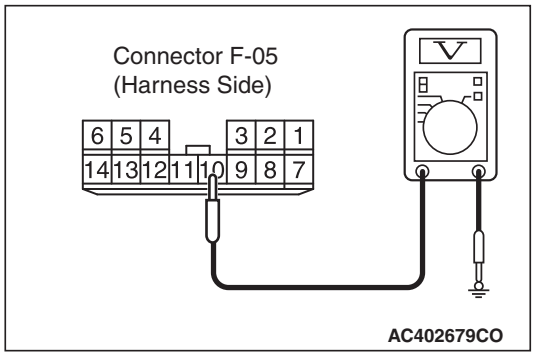

(3) Voltage between terminal 10 and body earth

OK: System voltage

Q: Is the check result normal?
YES : Go to Step 11.
NO : Go to Step 7.

Main Index
Group TOC

Step 7. Voltage measurement at C-217 power window relay connector.

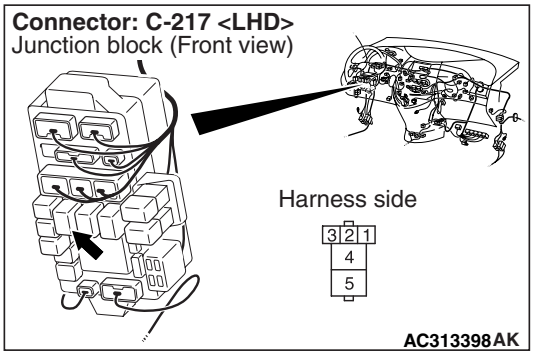

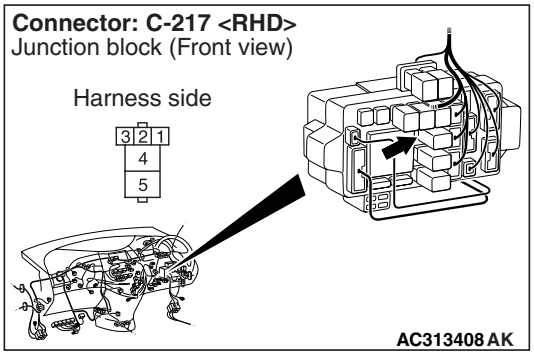

(1) Disconnect the connector, and measure at the wiring harness side.
(2) Turn the ignition switch to the ON position.

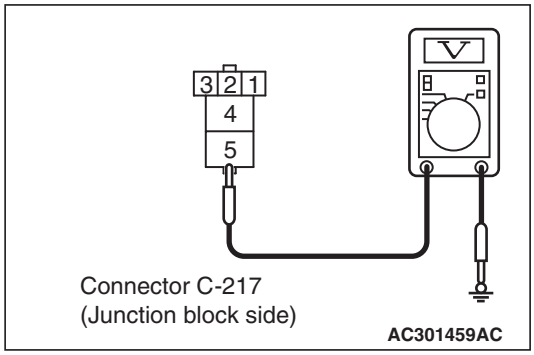

(3) Voltage between terminal 5 and body earth

OK: System voltage

Q: Is the check result normal?
YES : Go to Step 9.
NO : Go to Step 8.

Step 8. Check the wiring harness between C-217 power window relay connector terminal No.5 and fusible link (5).

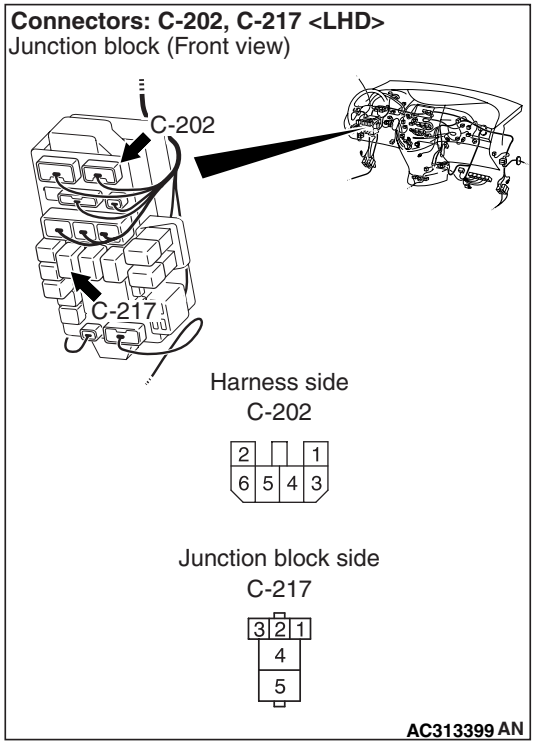

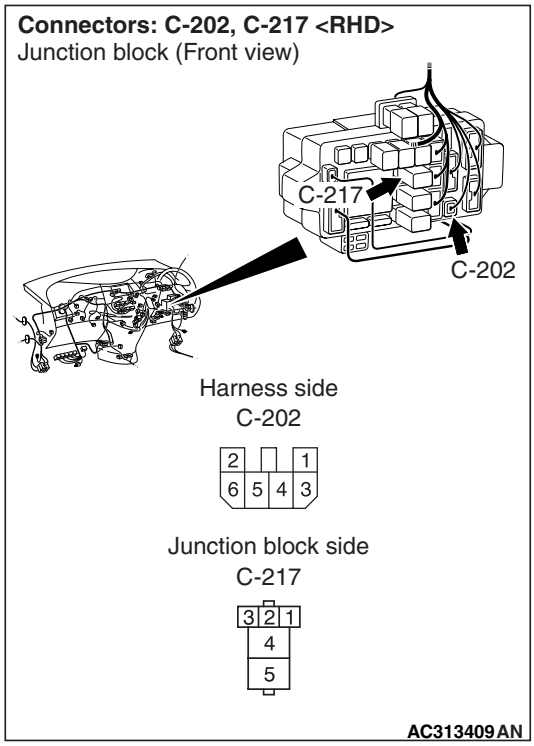

Main Index
Group TOC

NOTE:

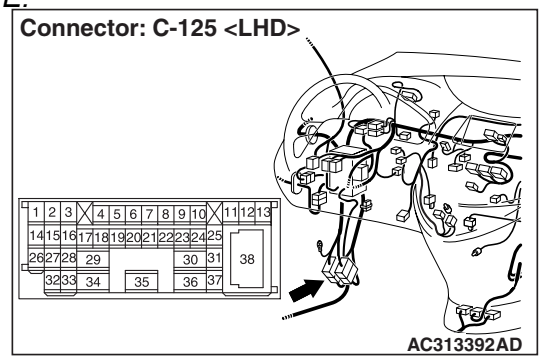

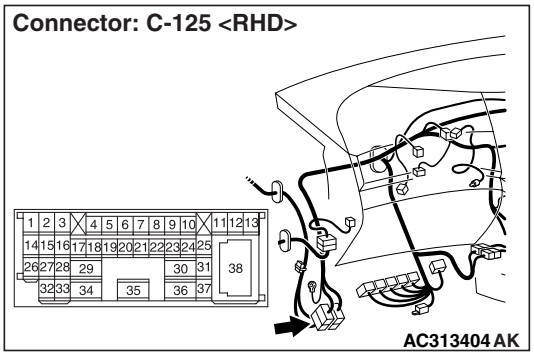

Prior to the wiring harness inspection, check intermediate connector C-125 and junction block connector C-202, and repair if necessary.

- Check the power supply line for open circuit.

Q: Is the check result normal?

YES : The trouble can be an intermittent malfunction (Refer to GROUP 00, How to Cope with Intermittent Malfunction P.00-5).

NO : Repair the wiring harness.

Step 9. Resistance measurement at C-217 power window relay connector.

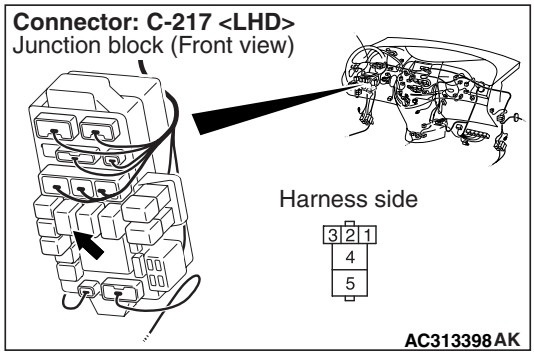

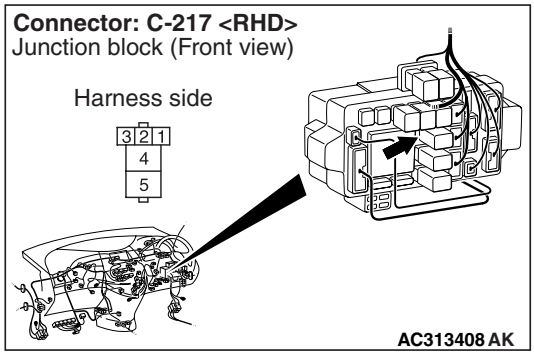

(1) Disconnect the connector, and measure at the wiring harness side.

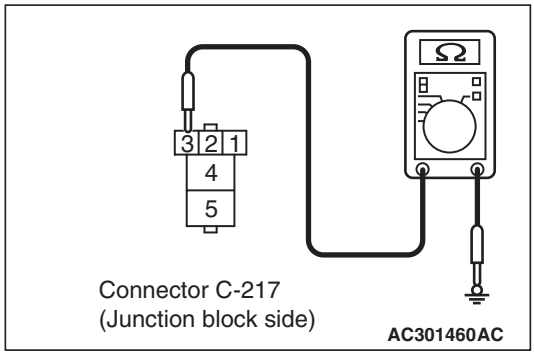

(2) Resistance between terminal 3 and body earth

OK: 2Ω or less

Q: Is the check result normal?

YES : Go to Step 11.

NO : Go to Step 10.

Main Index
Group TOC

Step 10. Connector check: C-49 earth connector

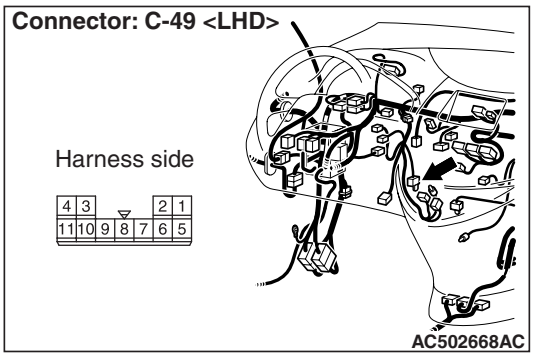

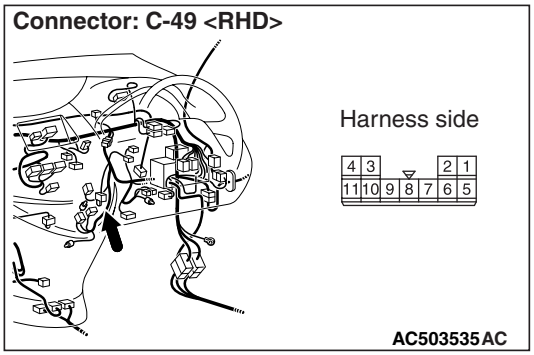

Q: Is the check result normal?
YES : Go to Step 11.
NO : Repair the connector.

Step 11. Check the wiring harness between C-217 power window relay connector terminal No.3 and C-49 earth connector terminal No.10.

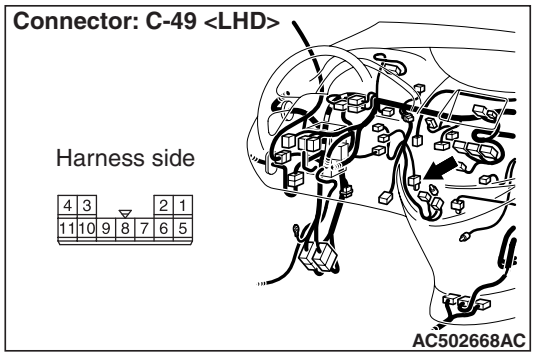

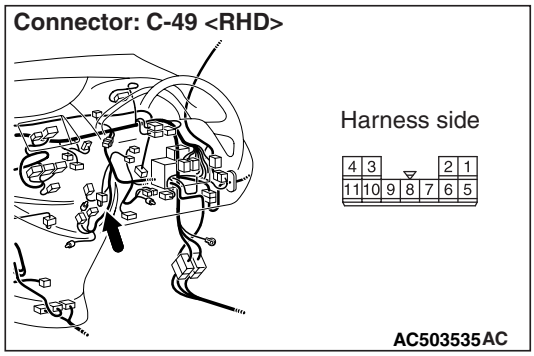

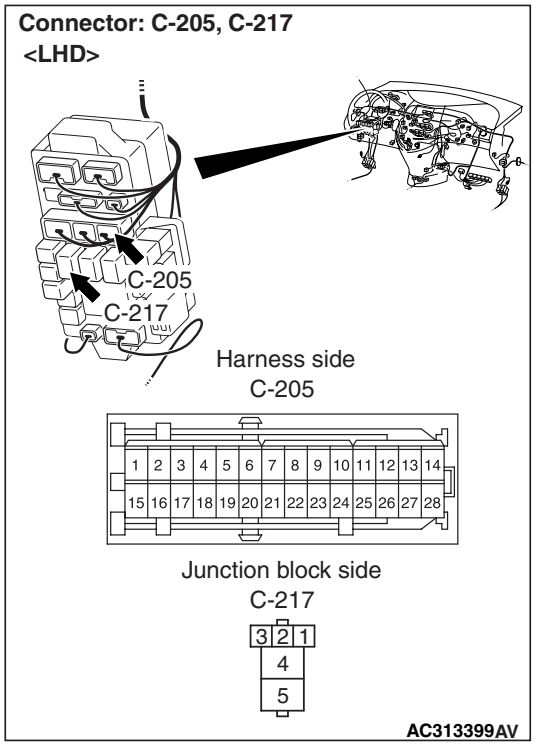

Main Index
Group TOC

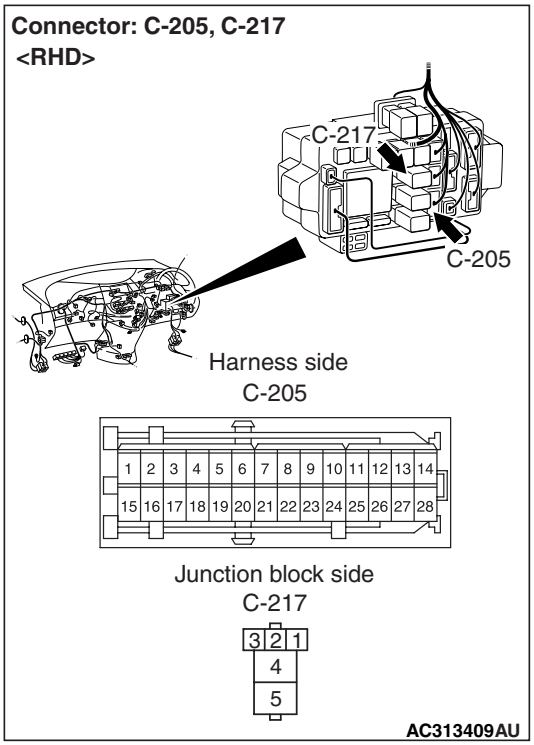

NOTE: Prior to the wiring harness inspection, check junction block connector C-205, and repair if necessary.

- Check the earth wires for open circuit.

Q: Is the check result normal?

YES : The trouble can be an intermittent malfunction (Refer to GROUP 00, How to Cope with Intermittent Malfunction P.00-5).

NO : Repair the wiring harness.

Step 12. Connector check: C-219 ETACS-ECU connector

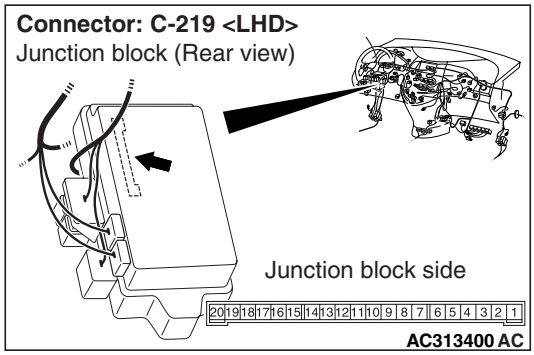

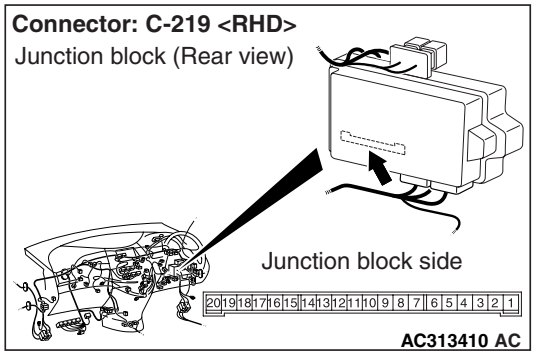

Q: Is the check result normal?

YES : Go to Step 13.

NO : Repair the connector.

Main Index
Group TOC

Step 13. Check the wiring harness between C-217 power window relay connector terminal No.4 and F-05 power window main switch connector terminal No.10.

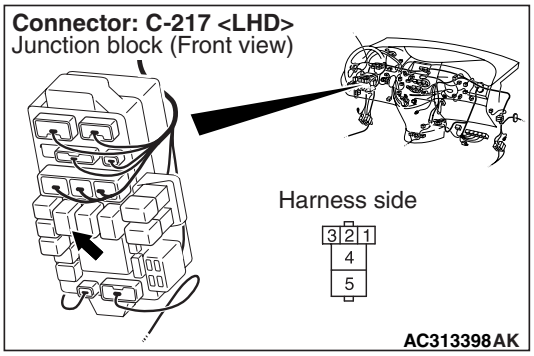

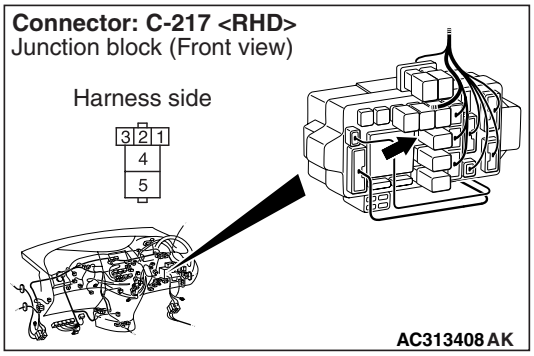

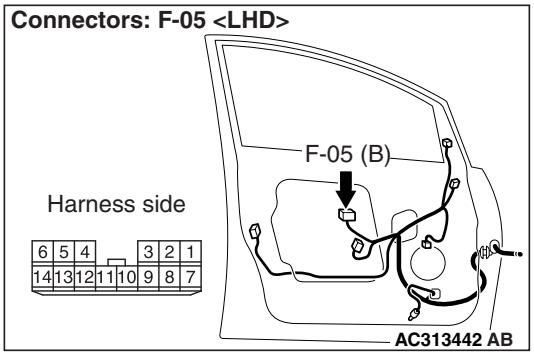

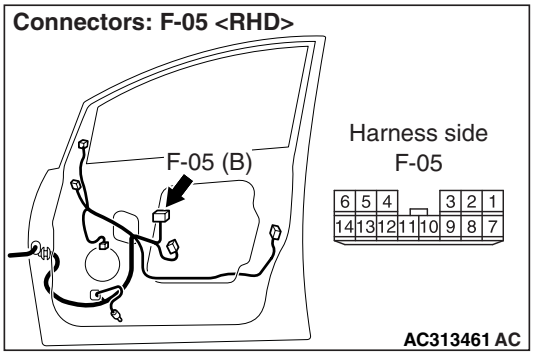

NOTE:

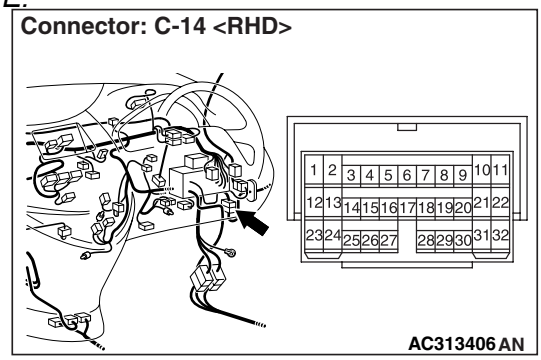

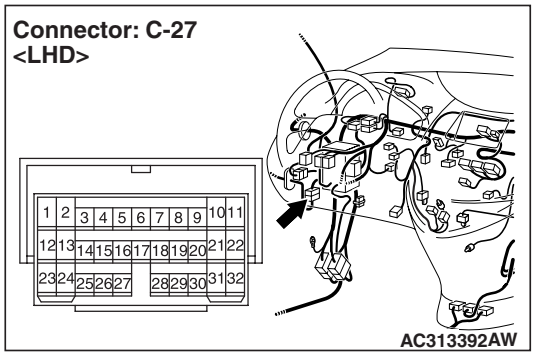

Prior to the wiring harness inspection, check joint connector C-27 <LH drive vehicles>, C-14 <RH drive vehicles> and repair if necessary.

- Check the power supply line for open circuit.

Q: Is the check result normal?

YES : The trouble can be an intermittent malfunction (Refer to GROUP 00, How to Cope with Intermittent Malfunction P.00-5).

NO : Repair the harness wire, and then go to Step 14.

Main Index
Group TOC

Step 14. Resistance measurement at the F-05 power window main switch connector.

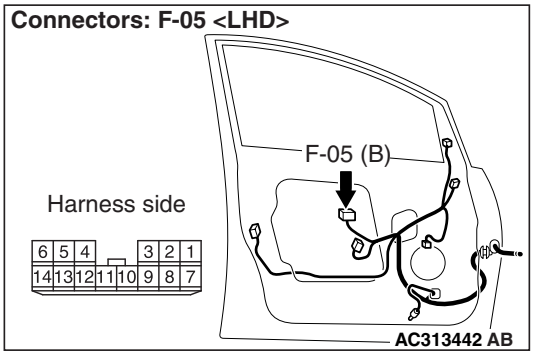

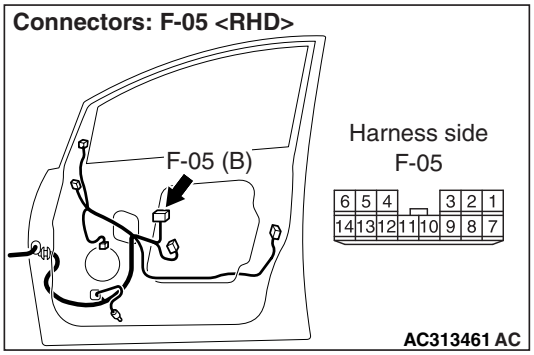

(1) Disconnect the connector, and measure at the wiring harness side.

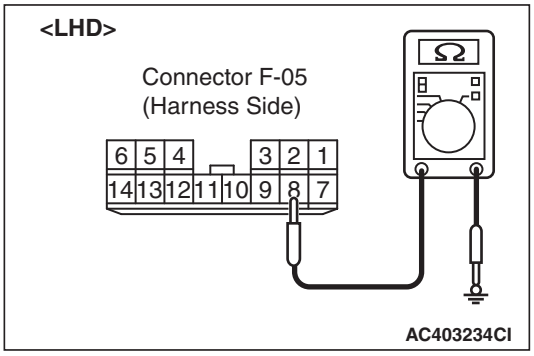

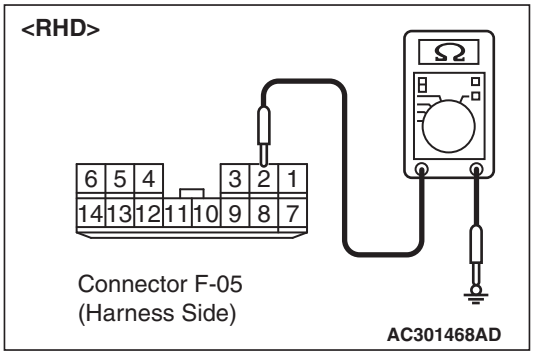

(2) Resistance between terminal 8 <LH drive vehicles> or 2 <RH drive vehicles> and body earth

OK: 2Ω or less

Q: Is the check result normal?

YES : . Go to Step 16.

NO : . Go to Step 15.

Step 15. Check the wiring harness between F-05 power window main switch connector terminal No.8 <LH drive vehicles> or No.2 <RH drive vehicles> and body earth.

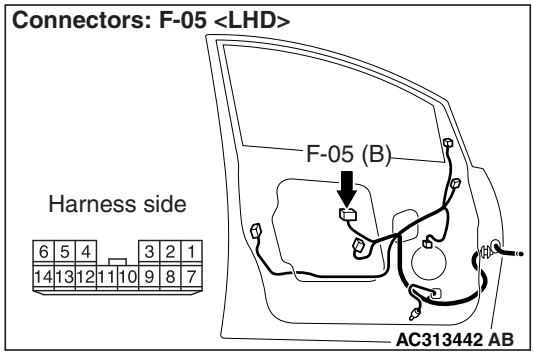

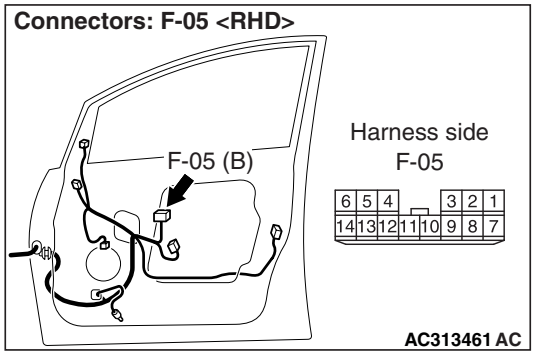

Main Index
Group TOC

NOTE:

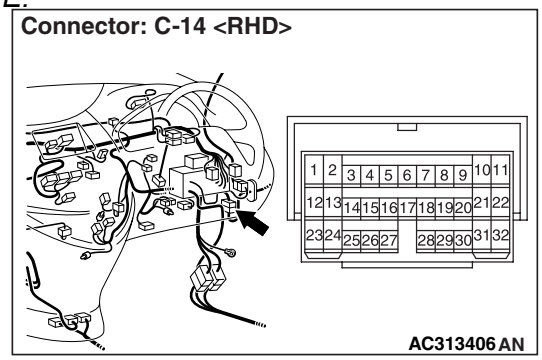

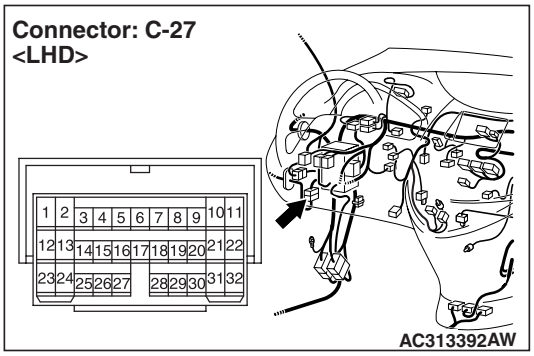

Prior to the wiring harness inspection, check intermediate connectors C-27 <LH drive vehicles>, C-14 <RH drive vehicles> and repair if necessary.

- Check the earth wires for open circuit.

Q: Is the check result normal?

YES : The trouble can be an intermittent malfunction (Refer to GROUP 00, How to Cope with Intermittent Malfunction P.00-5).

NO : Repair the wiring harness.

Step 16. Retest the system.

Check that the all the power windows work.

Q: Is the check result normal?

YES : The trouble can be an intermittent malfunction (Refer to GROUP 00 – How to Cope with Intermittent Malfunction P.00-5).

NO : Replace the ETACS-ECU.

Main Index
Group TOC

INSPECTION PROCEDURE D-2: Driver's power window does not work by means of the power window main switch. <LH drive vehicles>

Power Window (Front: LH) Circuit <LHD>

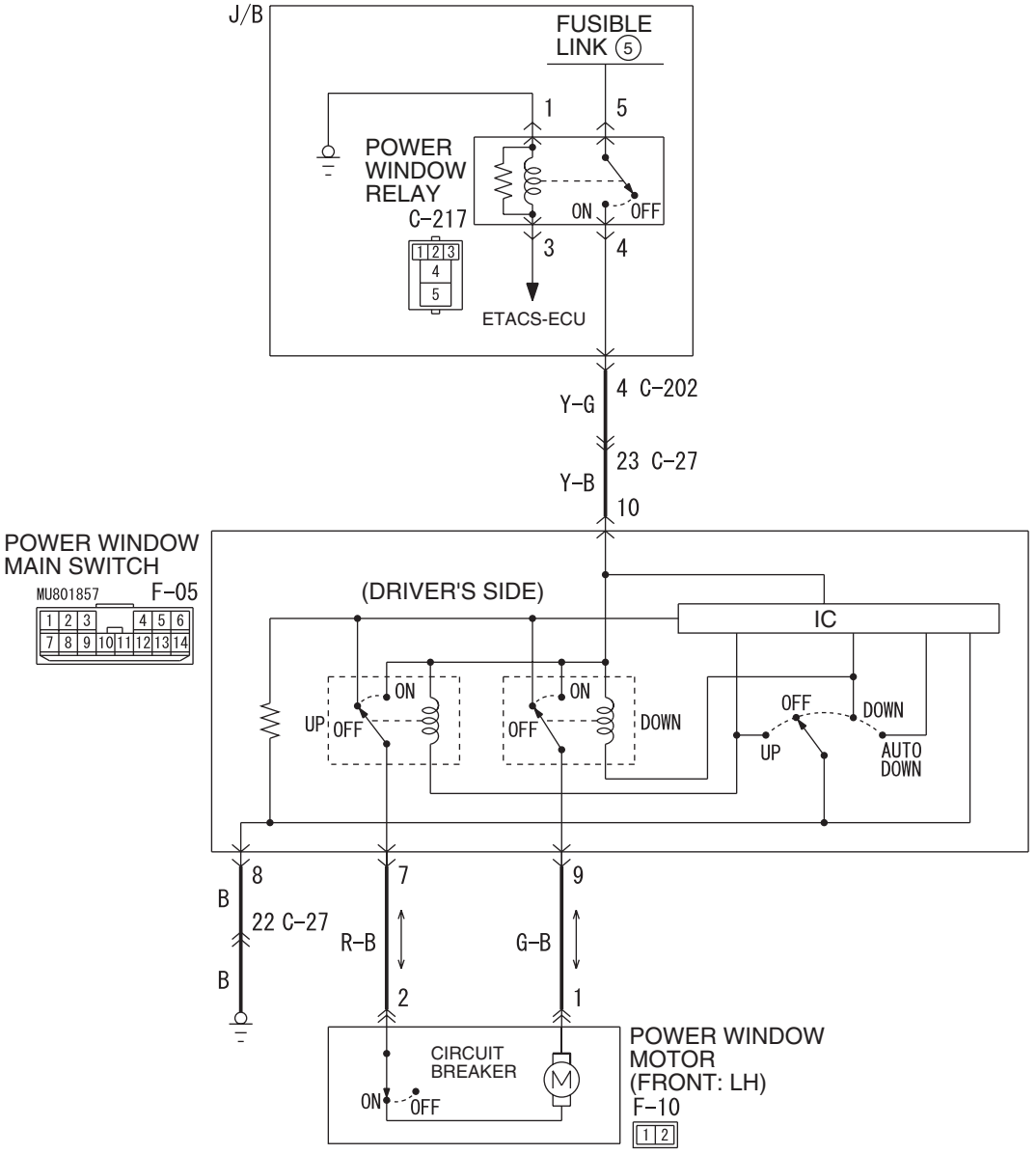

Wire colour code
B : Black LG : Light green G : Green L : Blue W : White Y : Yellow SB : Sky blue
BR : Brown O : Orange GR : Grey R : Red P : Pink V : Violet PU : Purple

W4X54X179A

COMMENTS ON TROUBLE SYMPTOM

If the driver's power window does not work by means of the power window main switch, the power window main switch or the driver's door power window motor may be defective.

PROBABLE CAUSES

- Malfunction of the power window main switch
- Malfunction of the power window motor (front: LH)
- Damaged harness wires and connectors

Main Index
Group TOC

DIAGNOSIS PROCEDURE

Step 1. Check the power window main switch.
Check that all of the front passenger's and rear door power windows can operate by means of the power window main switch.

Q: Is the check result normal?
YES : Go to Step 2.
NO : Refer to Inspection Procedure D-1 "Power windows do not work at all P.54B-111."

Step 2. Connector check: F-05 power window main switch connector and F-10 power window motor (front: LH) connector

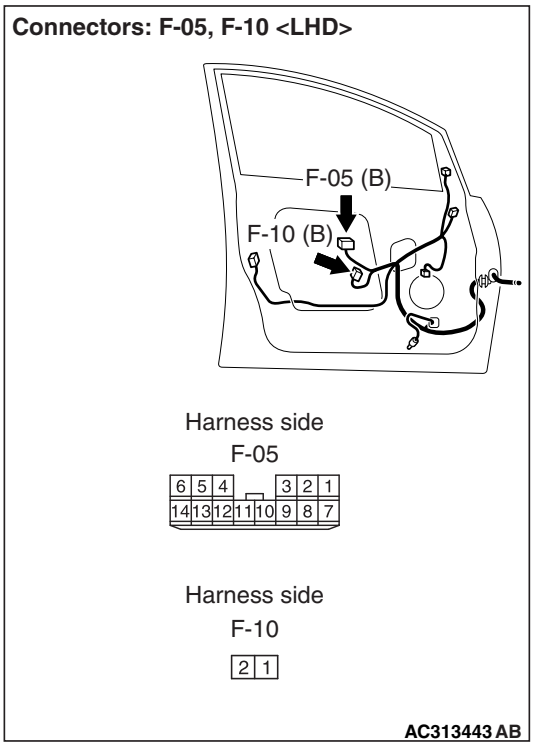

Q: Is the check result normal?
YES : Go to Step 3.
NO : Repair the connector.

Step 3. Check the power window main switch
Check that the power window main switch works normally. Refer to GROUP 42 – Door P.42-39.

Q: Is the check result normal?
YES : Go to Step 4.
NO : Replace the power window main switch.

Step 4. Check the power window motor
Check that the power window motor (front: LH) works normally. Refer to GROUP 42 – Door P.42-39.

Q: Is the check result normal?
YES : Go to Step 5.
NO : Replace the power window motor (front: LH).

Step 5. Check the wiring harness from F-10 power window motor (front: LH) connector terminal Nos. 1 and 2 to F-05 power window main switch connector terminal Nos. 9 and 7.

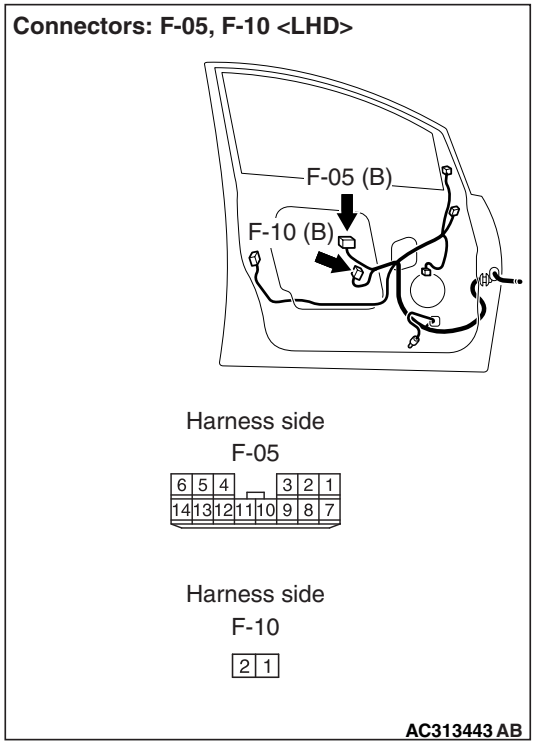

- Check the input and output lines for open or short circuit.

Q: Is the check result normal?
YES : The trouble can be an intermittent malfunction (Refer to GROUP 00 – How to Cope with Intermittent Malfunction P.00-5).
NO : Repair the wiring harness.

Main Index
Group TOC

INSPECTION PROCEDURE D-2: Driver's power window does not work by means of the power window main switch. <RH drive vehicles>

Power Window (Front: RH) Circuit <RHD>

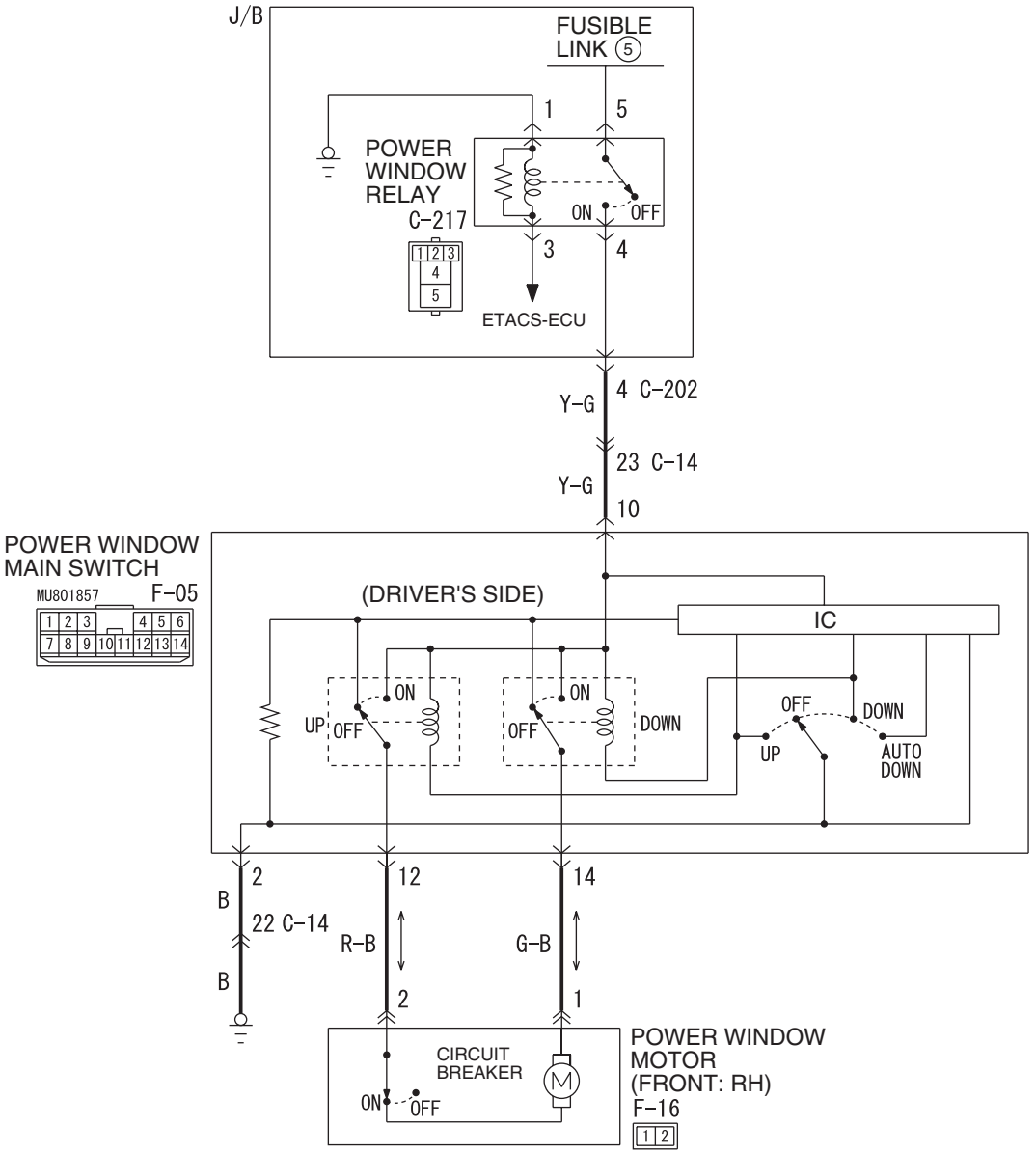

Wire colour code
B : Black LG : Light green G : Green L : Blue W : White Y : Yellow SB : Sky blue
BR : Brown O : Orange GR : Grey R : Red P : Pink V : Violet PU : Purple

W4X54X180A

COMMENTS ON TROUBLE SYMPTOM

If the driver's power window does not work by means of the power window main switch, the power window main switch or the driver's door power window motor may be defective.

PROBABLE CAUSES

- Malfunction of the power window main switch
- Malfunction of the front power window motor (front: RH)
- Damaged harness wires and connectors

Main Index
Group TOC

DIAGNOSIS PROCEDURE

Step 1. Check the power window main switch.
Check that all of the front passenger's and rear door power windows can operate by means of the power window main switch.

Q: Is the check result normal?
YES : Go to Step 2.
NO : Refer to Inspection Procedure D-1 "Power windows do not work at al P.54B-111."

Step 2. Connector check: F-05 power window main switch connector and F-16 power window motor (front: RH) connector

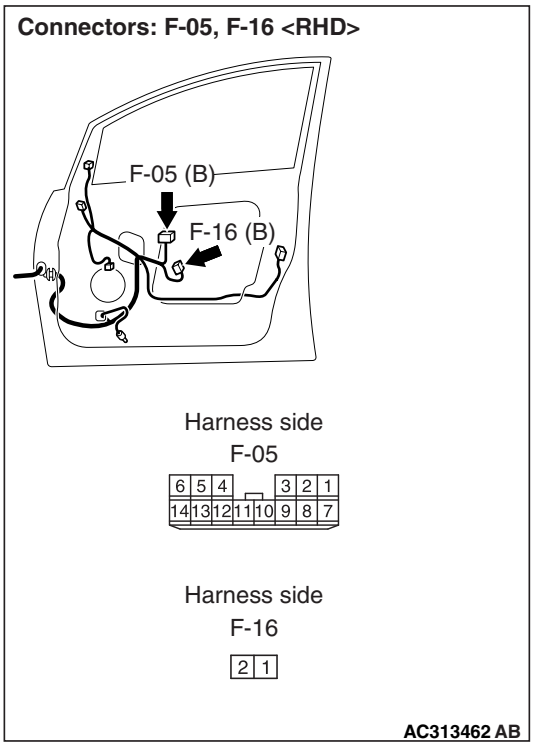

Q: Is the check result normal?
YES : Go to Step 3.
NO : Repair the connector.

Step 3. Check the power window main switch
Check that the power window main switch works normally. Refer to GROUP 42 – Door P.42-39.

Q: Is the check result normal?
YES : Go to Step 4.
NO : Replace the power window main switch.

Step 4. Check the power window motor
Check that the power window motor (front: RH) works normally. Refer to GROUP 42 – Door P.42-39.

Q: Is the check result normal?
YES : Go to Step 5.
NO : Replace the power window motor (front: RH).

Step 5. Check the wiring harness from F-16 power window motor (front: RH) connector terminal Nos. 1 and 2 to F-05 power window main switch connector terminal Nos. 14 and 12.

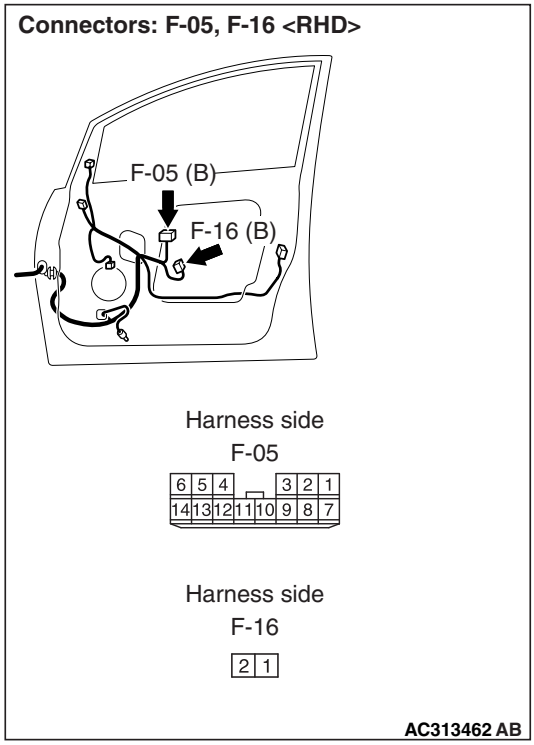

- Check the input and output lines for open or short circuit.

Q: Is the check result normal?
YES : The trouble can be an intermittent malfunction (Refer to GROUP 00 – How to Cope with Intermittent Malfunction P.00-5).
NO : Repair the wiring harness.

Main Index
Group TOC

INSPECTION PROCEDURE D-3: Relevant power window(s) do not work by means of the front and rear power window sub switches.

Power Window Sub Switch Circuit <LHD>

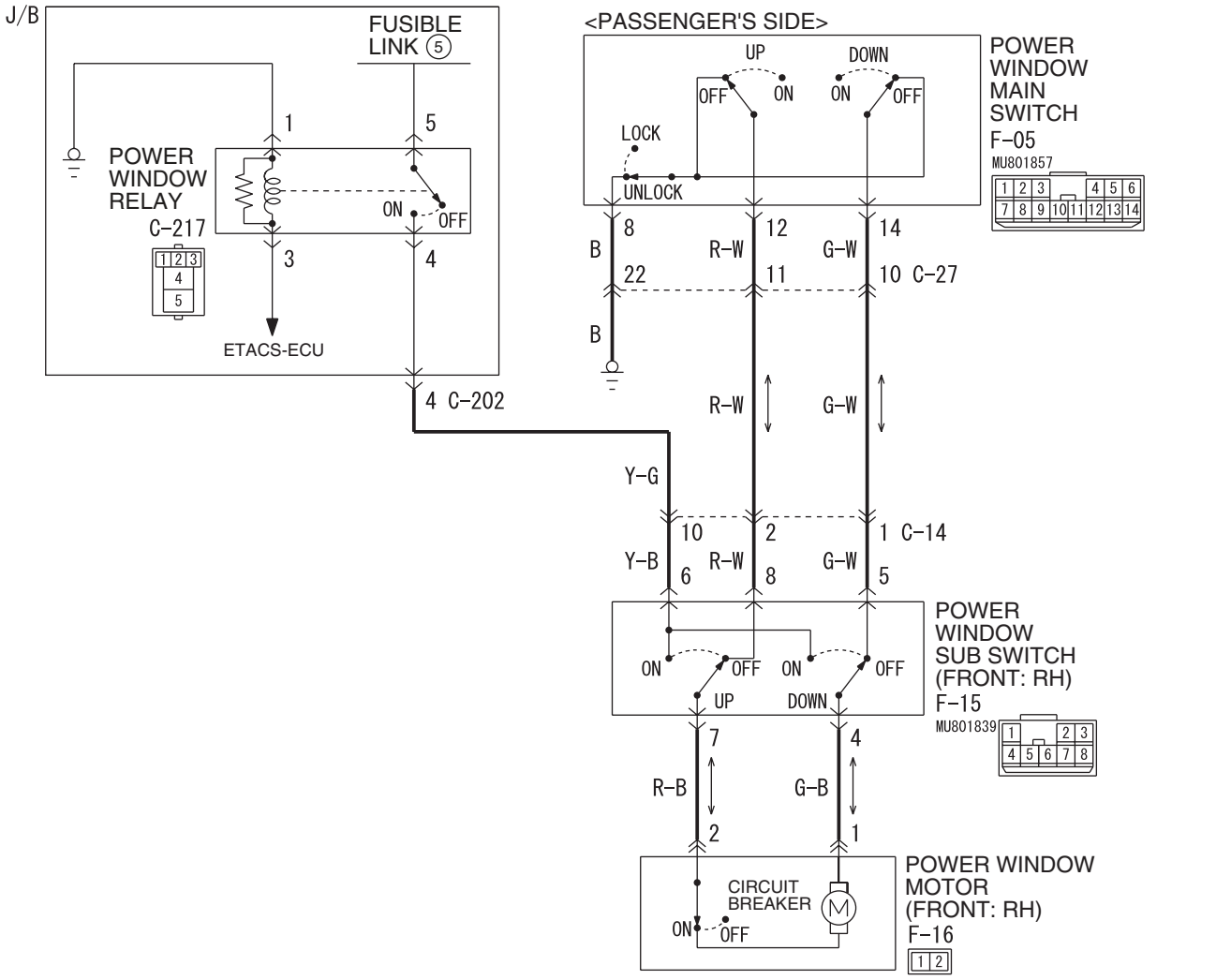

Wire colour code
B : Black LG : Light green G : Green L : Blue W : White Y : Yellow SB : Sky blue
BR : Brown O : Orange GR : Grey R : Red P : Pink V : Violet PU : Purple

W4X54X181A

Main Index
Group TOC

Power Window Sub Switch Circuit <RHD>

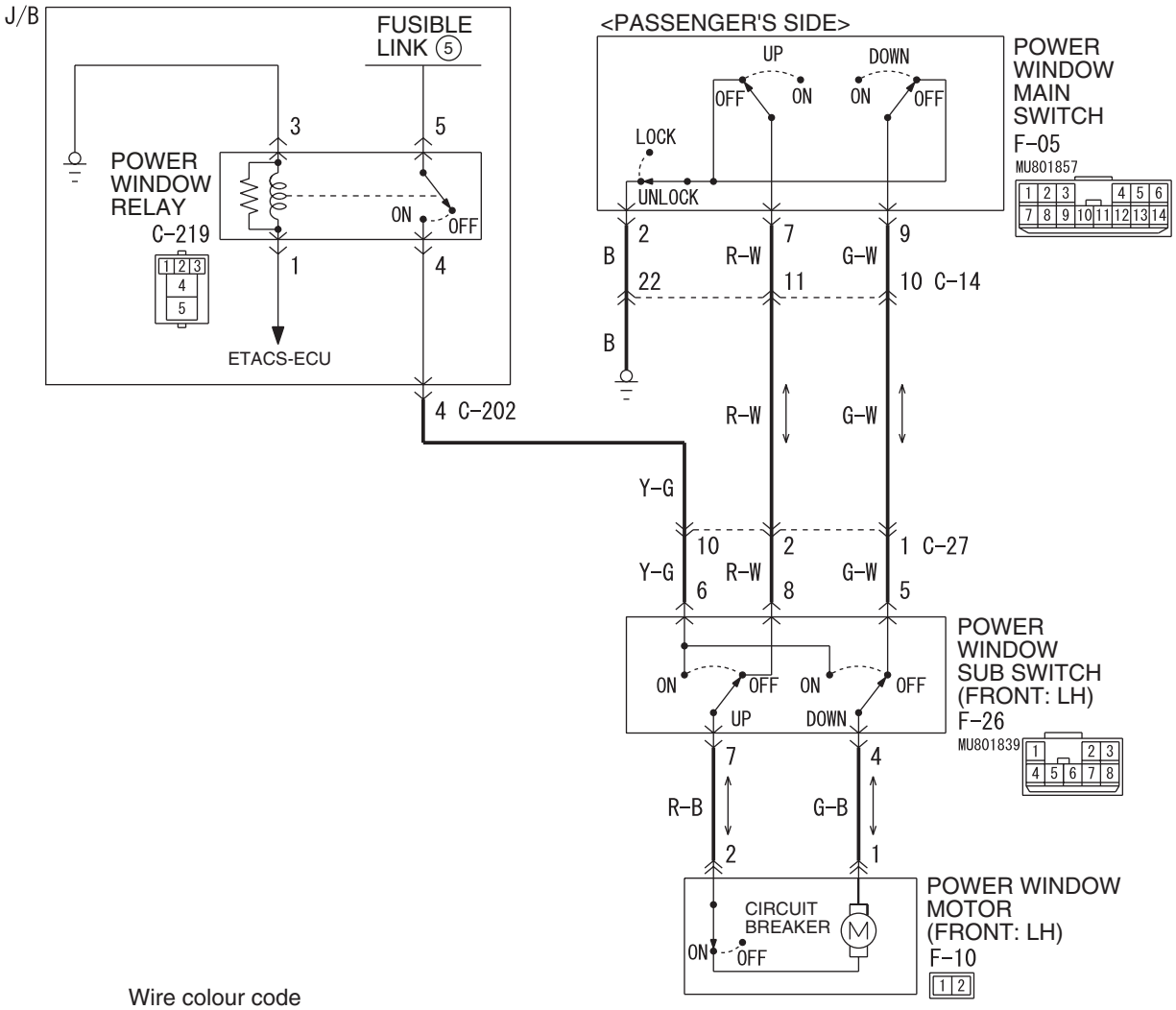

Wire colour code
B : Black LG : Light green G : Green L : Blue W : White Y : Yellow SB : Sky blue
BR : Brown O : Orange GR : Gray R : Red P : Pink V : Violet

W4X54X027A

Main Index
Group TOC

Power Window Sub Switch Circuit

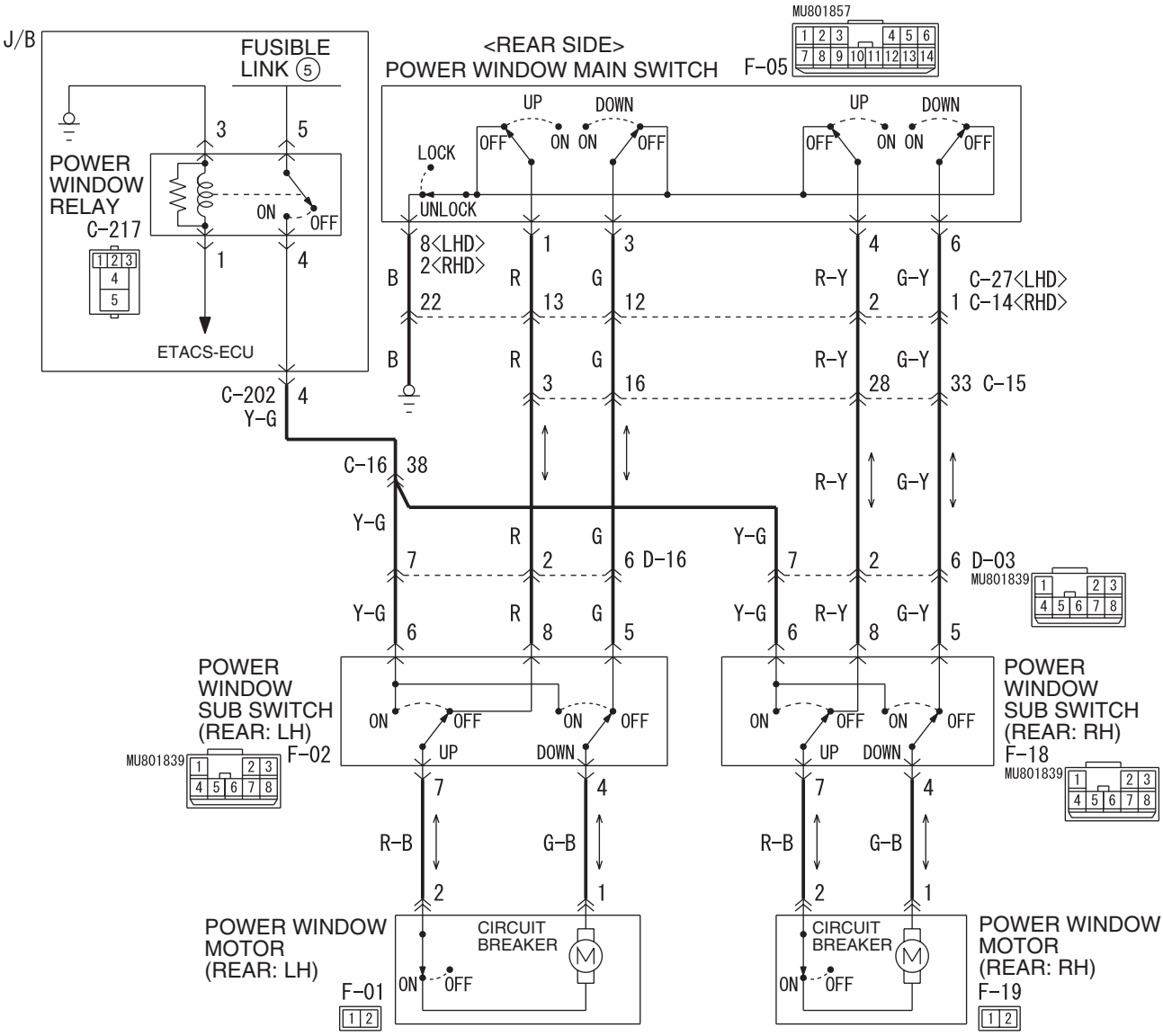

COMMENTS ON TROUBLE SYMPTOM

If the front passenger's or rear power window does not work by means of the respective power window sub switch, the power window sub switch or the power window motor may be defective.

PROBABLE CAUSES <LH DRIVE VEHICLES>

- Malfunction of the power window sub switch (front: RH), power window sub switch (rear: RH) or power window sub switch (rear: LH)
- Malfunction of the power window motor (front: RH), power window motor (rear: RH) or power window motor (rear: LH)
- Damaged harness wires and connectors

Main Index
Group TOC

PROBABLE CAUSES <RH DRIVE VEHICLES>

- Malfunction of the power window sub switch (front: LH), power window sub switch (rear: RH) or power window sub switch (rear: LH)
- Malfunction of the power window motor (front: LH), power window motor (rear: RH) or power window motor (rear: LH)
- Damaged harness wires and connectors

DIAGNOSIS PROCEDURE

Step 1. Check the power window main switch.
Check that the power window lock switch is turned off.

Q: Is the check result normal?
YES : Go to Step 2.
NO : Turn off the power window lock switch.

Step 2. Connector check: F-05 power window main switch connector

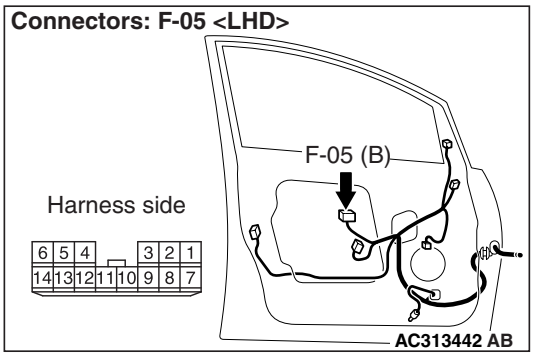

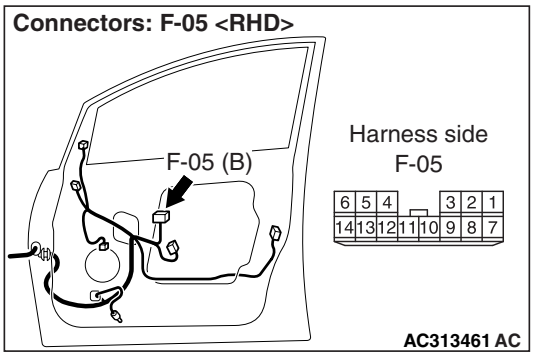

Q: Is the check result normal?
YES : Go to Step 3.
NO : Repair the connector.

Step 3. Check the power window main switch
Check that the power window main switch works normally. Refer to GROUP 42 – Door P.42-39.

Q: Is the check result normal?
YES : Go to Step 4.
NO : Replace the power window main switch.

Step 4. Determine a trouble spot.

Q: Which power window does not work?
Front passenger's door <LH drive vehicles> : Go to Step 5.
Front passenger's door <RH drive vehicles> : Go to Step 13.
Rear right door : Go to Step 21.
Rear left door : Go to Step 29.

Step 5. Connector check: F-15 power window sub switch (front: RH) connector and F-16 power window motor (front: RH) connector

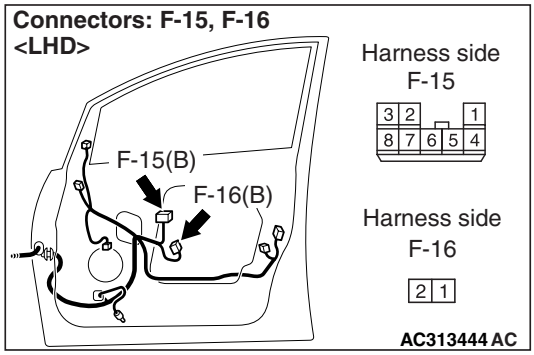

Q: Is the check result normal?
YES : Go to Step 6.
NO : Repair the connector.

Step 6. Check the power window sub switch (front: RH)
Check that the power window sub switch (front: RH) works normally. Refer to GROUP 42 – Door P.42-39.

Q: Is the check result normal?
YES : Go to Step 7.
NO : Replace the power window sub switch (front: RH).

Step 7. Check the power window motor (front: RH)
Check that the power window motor (front: RH) works normally. Refer to GROUP 42 – Door P.42-39.

Q: Is the check result normal?
YES : Go to Step 8.
NO : Replace the power window motor (front: RH).

Main Index
Group TOC

Step 8. Voltage measurement at F-15 power window sub switch (front: RH) connector.

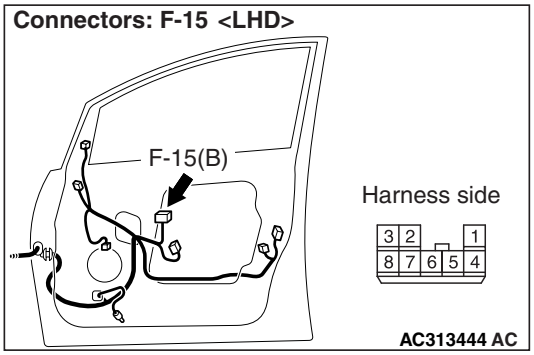

(1) Disconnect the connector, and measure at the wiring harness side.
(2) Turn the ignition switch to the ON position.

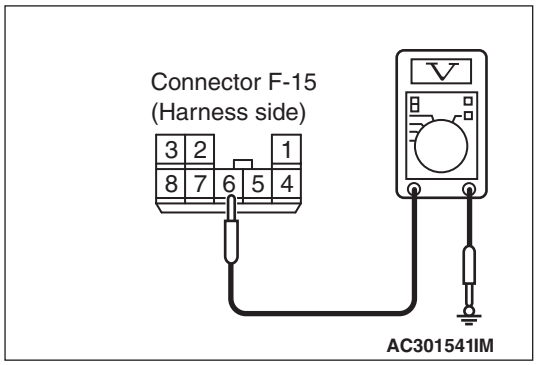

(3) Voltage between terminal 6 and body earth

OK: System voltage

Q: Is the check result normal?
YES : Go to Step 11.
NO : Go to Step 9.

Step 9. Connector check: C-217 power window relay connector

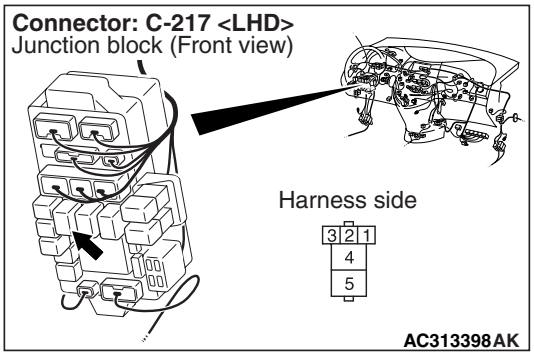

Q: Is the check result normal?
YES : Go to Step 10.
NO : Repair the connector.

Step 10. Check the wiring harness from F-15 power window sub switch (front: RH) connector terminal No.6 to C-217 power window relay connector terminal No.4.

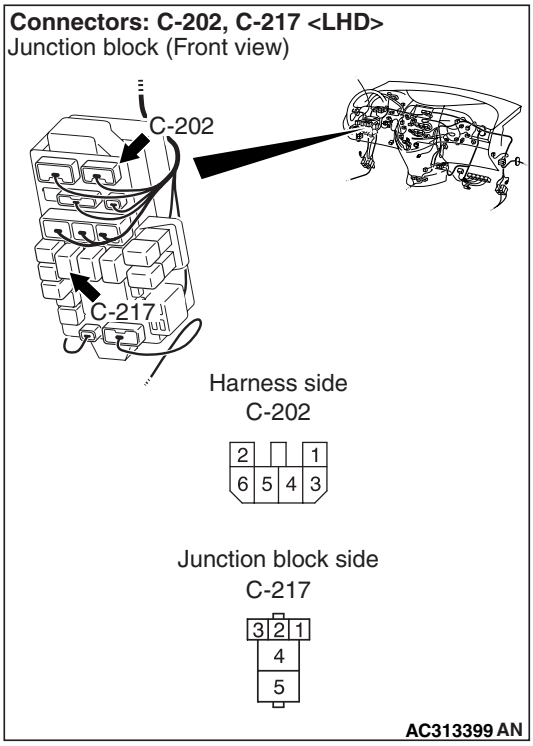

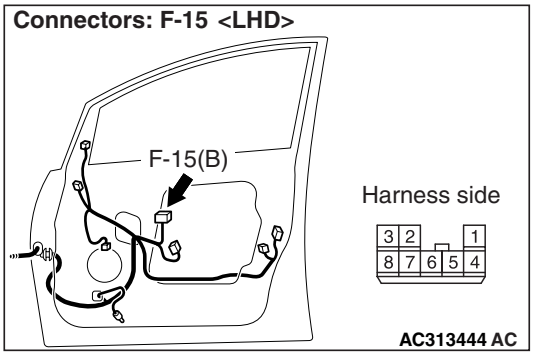

NOTE:

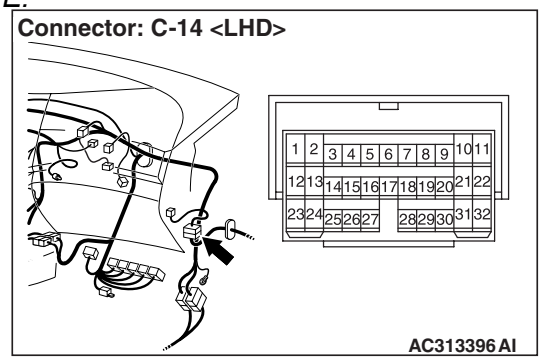

Prior to the wiring harness inspection, check intermediate connectors C-14 and junction block connector C-202, and repair if necessary.

- Check the power supply line for open circuit.

Main Index
Group TOC

Q: Is the check result normal?
YES : The trouble can be an intermittent malfunction (Refer to GROUP 00 – How to Cope with Intermittent Malfunction P.00-5).
NO : Repair the wiring harness.

Step 11. Check the wiring harness from F-16 power window motor (front: RH) connector terminal Nos. 1 and 2 to F-15 power window sub switch (front: RH) connector terminal Nos. 4 and 7.

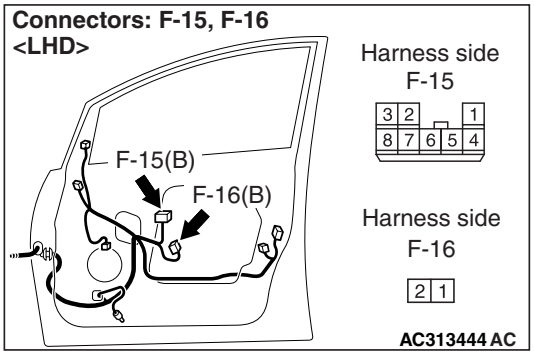

- Check the input and output lines for open or short circuit.

Q: Is the check result normal?
YES : Go to Step 12.
NO : Repair the wiring harness.

Step 12. Check the wiring harness from F-05 power window main switch connector terminal Nos. 12 and 14 to F-15 power window sub switch (front: RH) connector terminal Nos. 8 and 5.

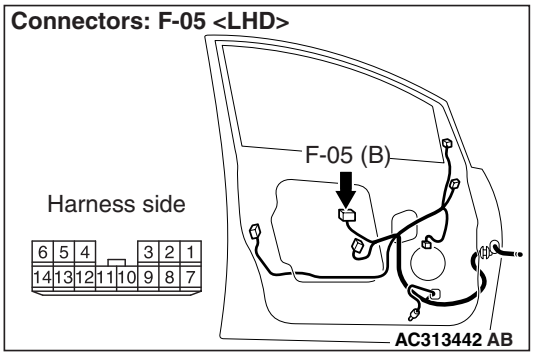

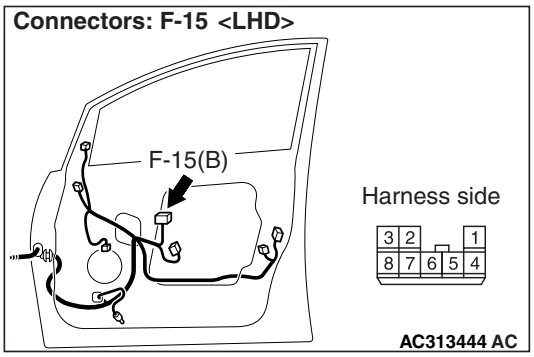

NOTE:

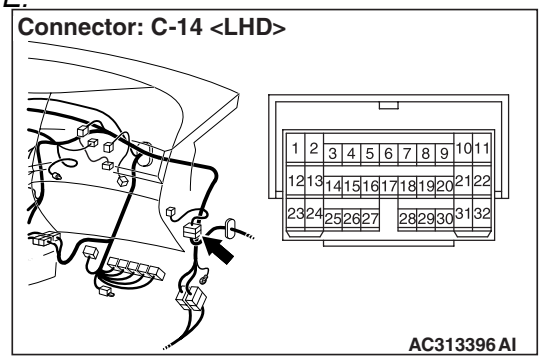

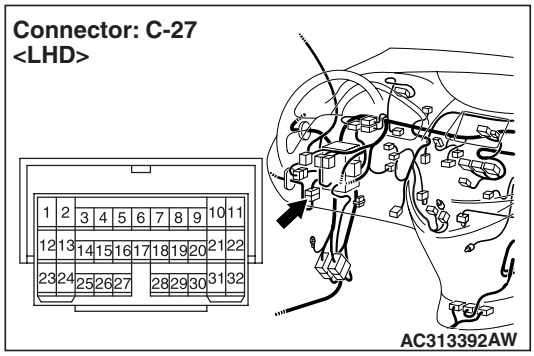

Prior to the wiring harness inspection, check intermediate connectors C-14,C-27, and repair if necessary.

- Check the input and output lines for open or short circuit.

Q: Is the check result normal?
YES : The trouble can be an intermittent malfunction (Refer to GROUP 00 – How to Cope with Intermittent Malfunction P.00-5).
NO : Repair the wiring harness.

Step 13. Connector check: F-26 power window sub switch (front: LH) connector and F-10 power window motor (front: LH) connector

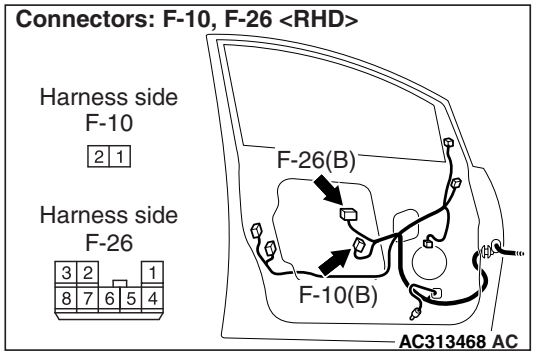

Q: Is the check result normal?
YES : Go to Step 14.
NO : Repair the connector.

Main Index
Group TOC

Step 14. Check the power window sub switch (front: LH)

Check that the power window sub switch (front: LH) works normally. Refer to GROUP 42 – Door P.42-39.

Q: Is the check result normal?

YES : Go to Step 15.

NO : Replace the power window sub switch (front: LH).

Step 15. Check the power window motor (front: LH)

Check that the power window motor (front: LH) works normally. Refer to GROUP 42 – Door P.42-39.

Q: Is the check result normal?

YES : Go to Step 16.

NO : Replace the power window motor (front: LH).

Step 16. Voltage measurement at F-26 power window sub switch (front: LH) connector.

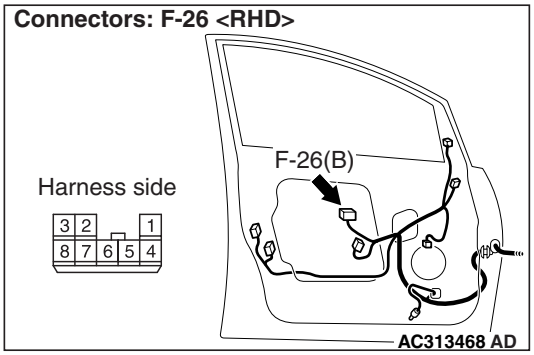

(1) Disconnect the connector, and measure at the wiring harness side.

(2) Turn the ignition switch to the ON position.

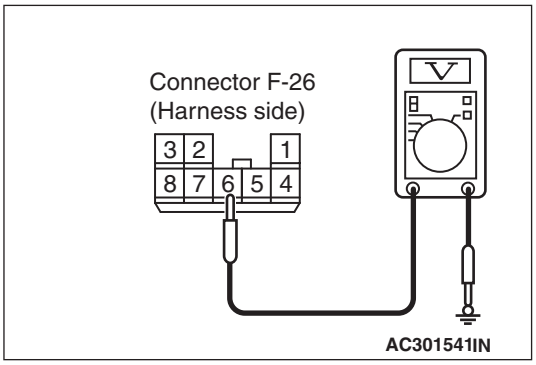

(3) Voltage between terminal 6 and body earth

OK: System voltage

Q: Is the check result normal?

YES : Go to Step 19.

NO : Go to Step 17.

Step 17. Connector check: C-217 power window relay connector

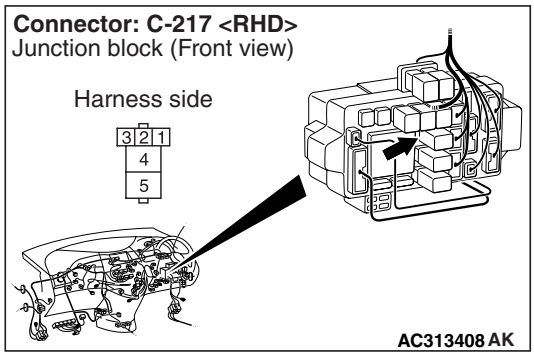

Q: Is the check result normal?

YES : Go to Step 18.

NO : Repair the connector.

Main Index
Group TOC

Step 18. Check the wiring harness from F-26 power window sub switch (front: LH) connector terminal No.6 to C-217 power window relay connector terminal No.4.

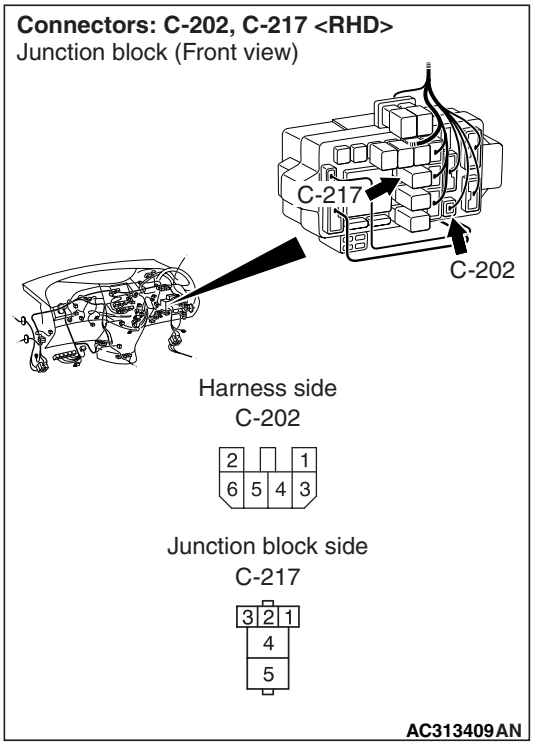

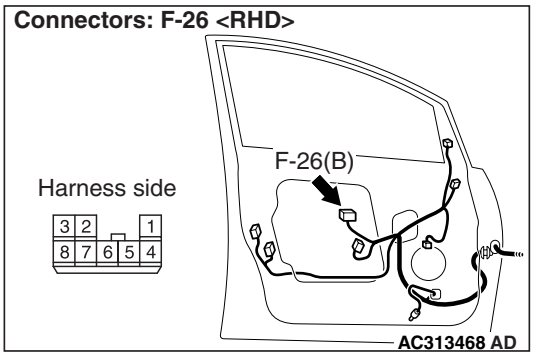

NOTE:

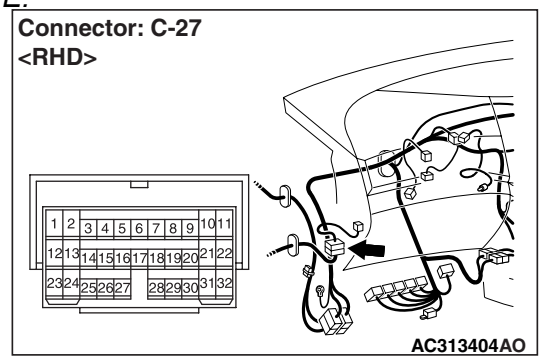

Prior to the wiring harness inspection, check intermediate connectors C-27 and junction block connector C-202, and repair if necessary.

- Check the power supply line for open circuit.

Q: Is the check result normal?

YES : The trouble can be an intermittent malfunction (Refer to GROUP 00 – How to Cope with Intermittent Malfunction P.00-5).

NO : Repair the wiring harness.

Step 19. Check the wiring harness from F-10 power window motor (front: LH) connector terminal Nos. 1 and 2 to F-26 power window sub switch (front: LH) connector terminal Nos. 4 and 7.

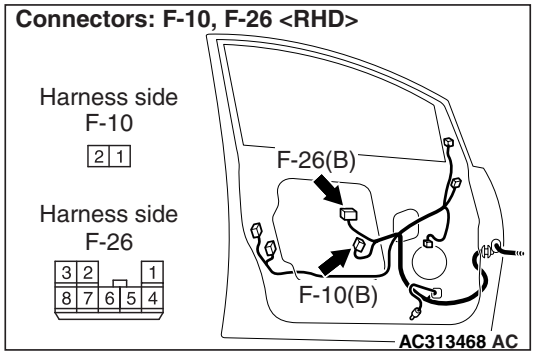

- Check the input and output lines for open or short circuit.

Q: Is the check result normal?

YES : Go to Step 20.

NO : Repair the wiring harness.

Main Index
Group TOC

Step 20. Check the wiring harness from F-05 power window main switch connector terminal Nos. 7 and 9 to F-26 power window sub switch (front: RH) connector terminal Nos. 8 and 5.

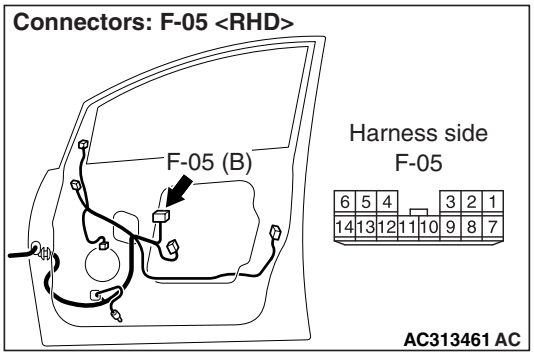

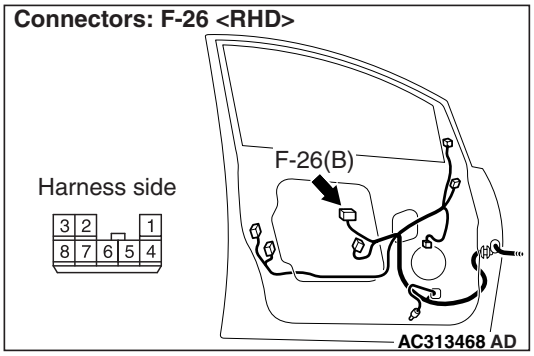

NOTE:

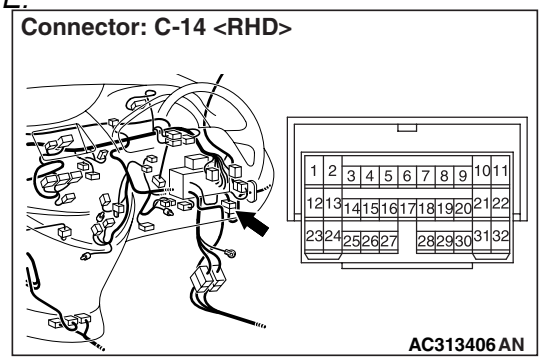

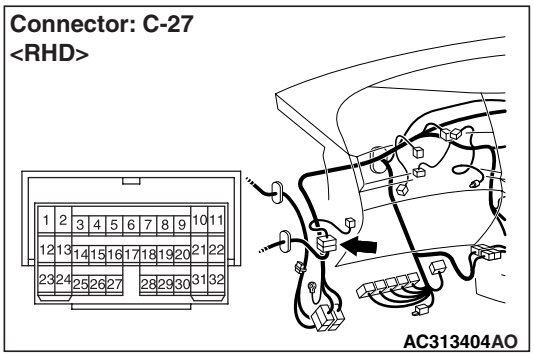

Prior to the wiring harness inspection, check intermediate connectors C-14, C-27, and repair if necessary.

- Check the input and output lines for open or short circuit.

Q: Is the check result normal?
YES : The trouble can be an intermittent malfunction (Refer to GROUP 00 – How to Cope with Intermittent Malfunction P.00-5).
NO : Repair the wiring harness.

Step 21. Connector check: F-18 power window sub switch (rear: RH) connector and F-19 power window motor (rear: RH) connector

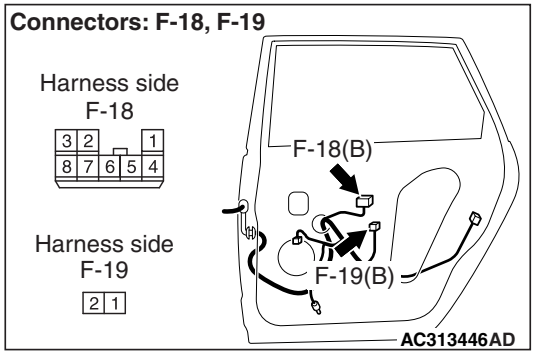

Q: Is the check result normal?
YES : Go to Step 22.
NO : Repair the connector.

Step 22. Check the power window sub switch (rear: RH)

Check that the power window sub switch (rear: RH) works normally. Refer to GROUP 42 – Door P.42-39.

Q: Is the check result normal?
YES : Go to Step 23.
NO : Replace the power window sub switch (rear: RH).

Step 23. Check the power window motor (rear: RH)

Check that the power window motor (rear: RH) works normally. Refer to GROUP 42 – Door P.42-39.

Q: Is the check result normal?
YES : Go to Step 24.
NO : Replace the power window motor (rear: RH).

Main Index
Group TOC

Step 24. Voltage measurement at F-18 power window sub switch (rear: RH) connector.

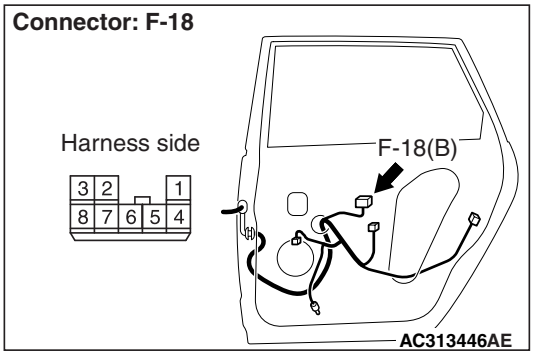

(1) Disconnect the connector, and measure at the wiring harness side.
(2) Turn the ignition switch to the ON position.

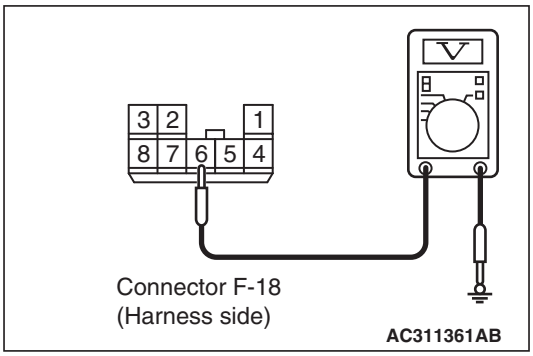

(3) Voltage between terminal 6 and body earth

OK: System voltage

Q: Is the check result normal?
YES : Go to Step 27.
NO : Go to Step 25.

Step 25. Connector check: C-217 power window relay connector

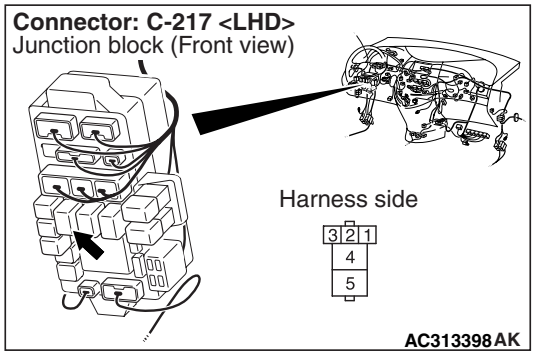

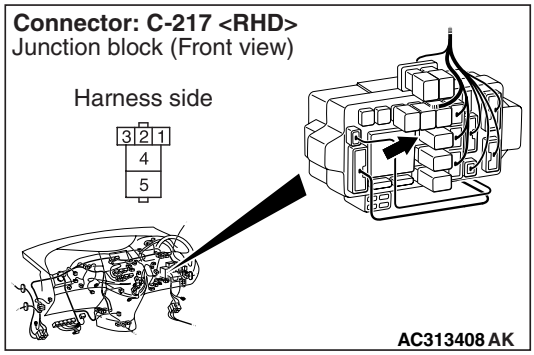

Q: Is the check result normal?
YES : Go to Step 26.
NO : Repair the connector.

Step 26. Check the wiring harness from F-18 power window sub switch (rear: RH) connector terminal No.6 to C-217 power window relay connector terminal No.4.

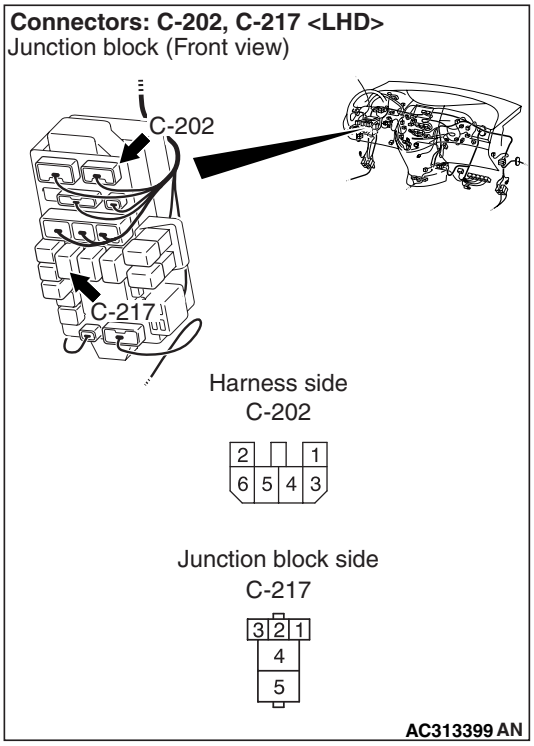

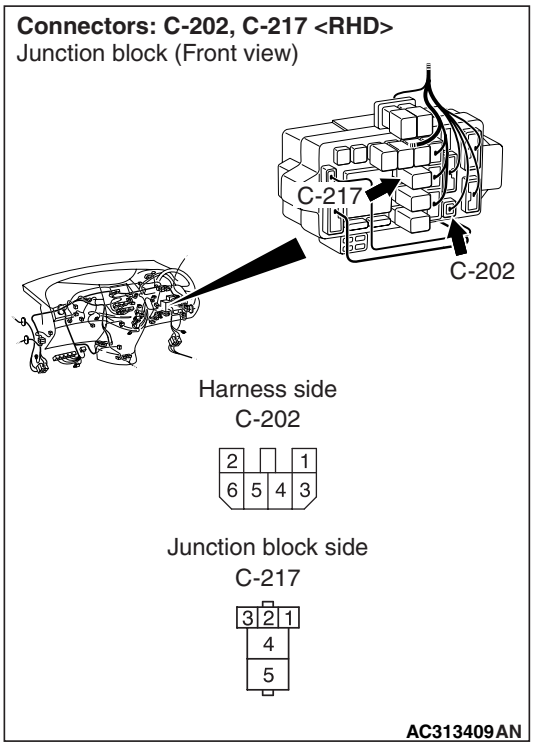

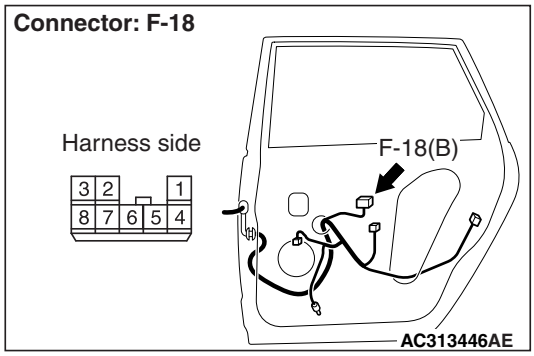

NOTE:

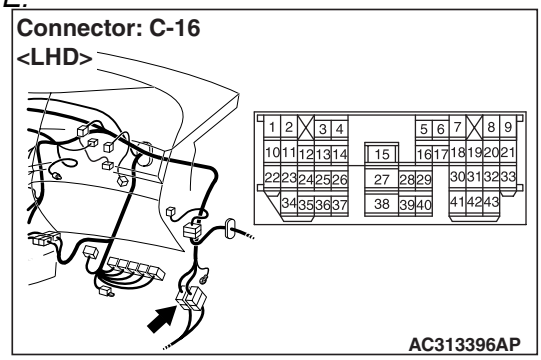

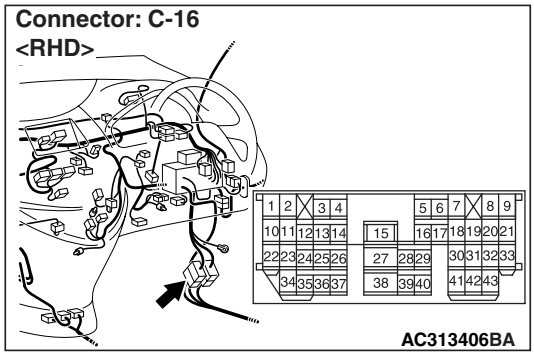

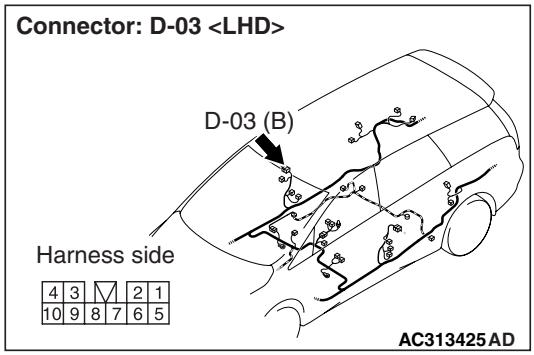

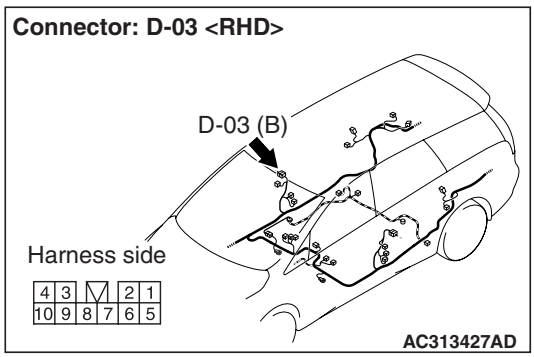

Main Index
Group TOC

Prior to the wiring harness inspection, check intermediate connectors C-16, D-03, and junction block connector C-202, and repair if necessary.

- Check the power supply line for open circuit.

Q: Is the check result normal?

YES : The trouble can be an intermittent malfunction (Refer to GROUP 00 – How to Cope with Intermittent Malfunction P.00-5).

NO : Repair the wiring harness.

Step 27. Check the wiring harness from F-19 power window motor (rear: RH) connector terminal Nos. 1 and 2 to F-18 power window sub switch (rear: RH) connector terminal Nos. 4 and 7.

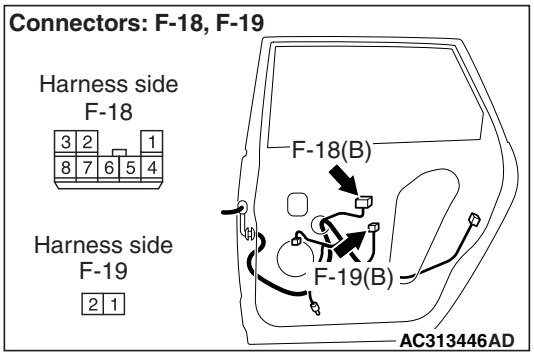

- Check the input and output lines for open or short circuit.

Q: Is the check result normal?

YES : Go to Step 28.

NO : Repair the wiring harness.

Step 28. Check the wiring harness from F-05 power window main switch connector terminal Nos. 4 and 6 to F-18 power window sub switch (rear: RH) connector terminal Nos. 8 and 5.

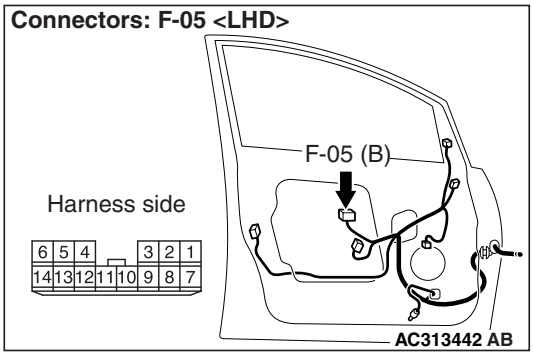

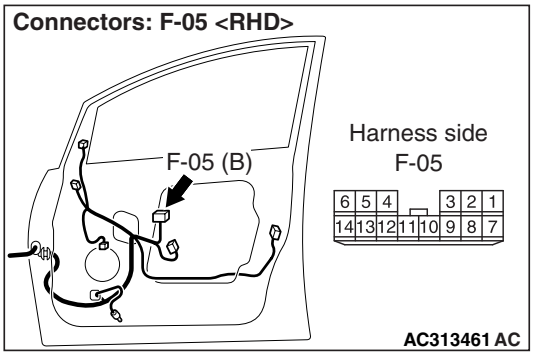

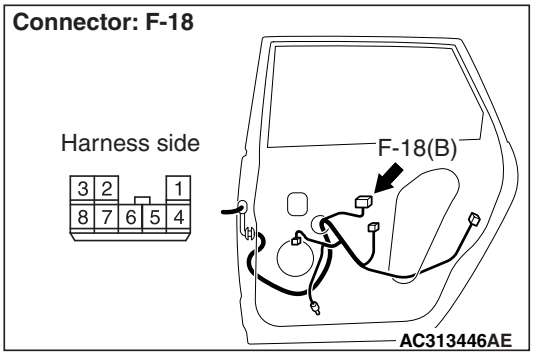

NOTE:

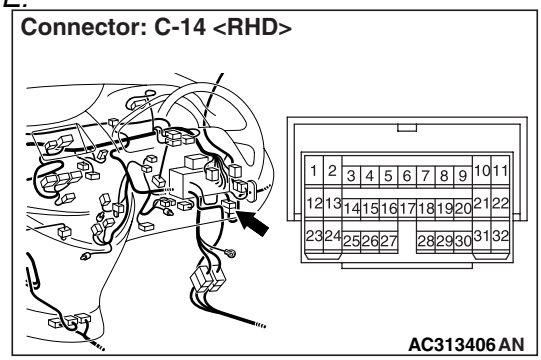

Main Index
Group TOC

Connector: C-15 <RHD>

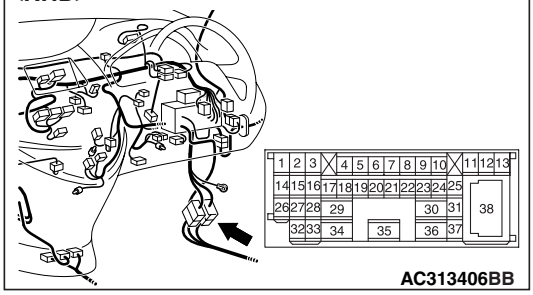

Connector: C-15 <LHD>

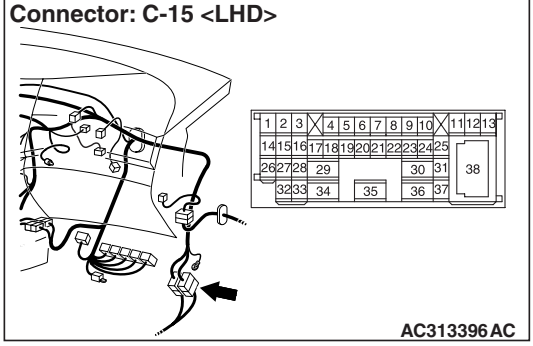

Connector: C-27 <LHD>

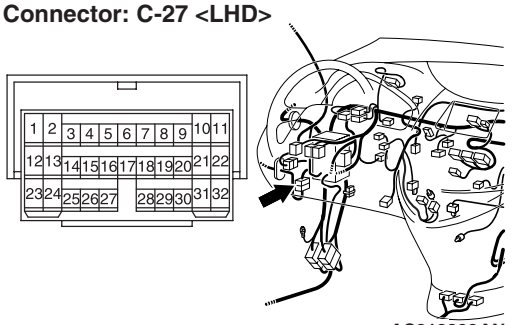

Connector: D-03 <LHD>

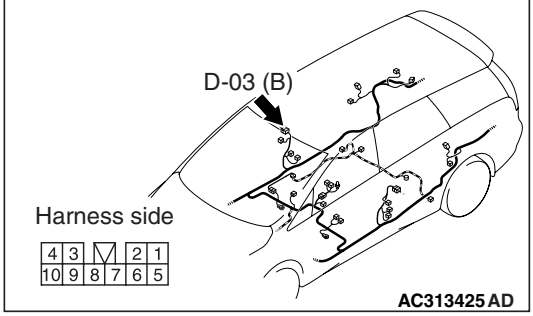

Connector: D-03 <RHD>

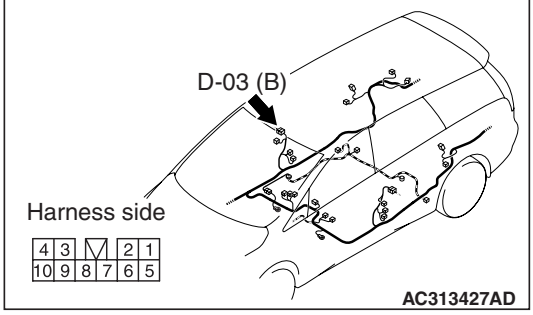

Prior to the wiring harness inspection, check intermediate connectors C-14 <RHD>, C-15, C-27 <LHD>, D-03, and repair if necessary.

- Check the input and output lines for open or short circuit.

Q: Is the check result normal?
YES : The trouble can be an intermittent malfunction (Refer to GROUP 00 – How to Cope with Intermittent Malfunction P.00-5).
NO : Repair the wiring harness.

Step 29. Connector check: F-02 power window sub switch (rear: LH) connector and F-01 power window motor (rear: LH) connector

Connectors: F-01, F-02

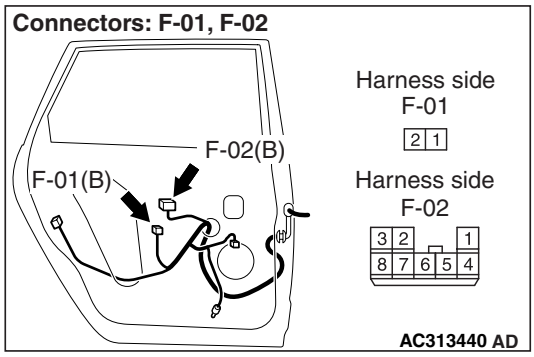

Q: Is the check result normal?
YES : Go to Step 30.
NO : Repair the connector.

Step 30. Check the power window sub switch (rear: LH)

Check that the power window sub switch (rear: LH) works normally. Refer to GROUP 42 – Door P.42-39.

Q: Is the check result normal?
YES : Go to Step 31.
NO : Replace the power window sub switch (rear: LH).

Step 31. Check the power window motor (rear: LH)

Check that the power window motor (rear: LH) works normally. Refer to GROUP 42 – Door P.42-39.

Q: Is the check result normal?
YES : Go to Step 32.
NO : Replace the power window motor (rear: LH).

Main Index
Group TOC

Step 32. Voltage measurement at F-02 power window sub switch (rear: LH) connector.

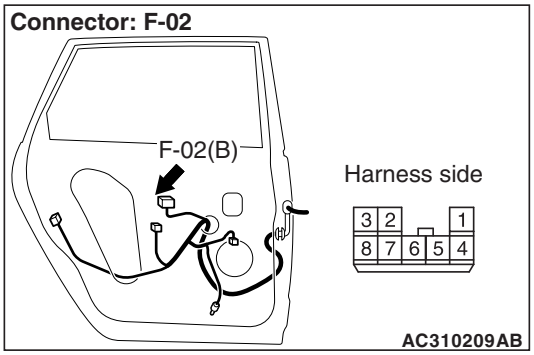

(1) Disconnect the connector, and measure at the wiring harness side.
(2) Turn the ignition switch to the ON position.

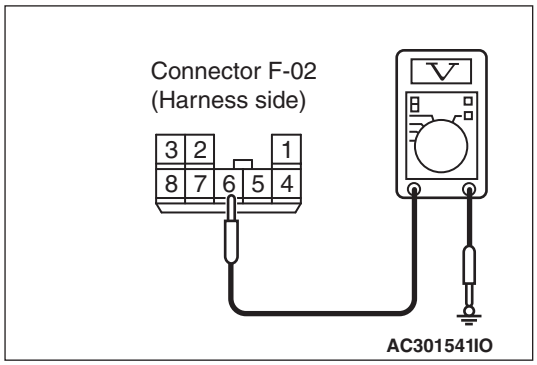

(3) Voltage between terminal 6 and body earth

OK: System voltage

Q: Is the check result normal?
YES : Go to Step 35.
NO : Go to Step 33.

Step 33. C-217 power window relay connector

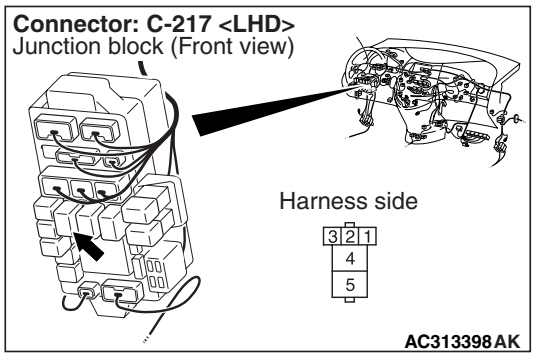

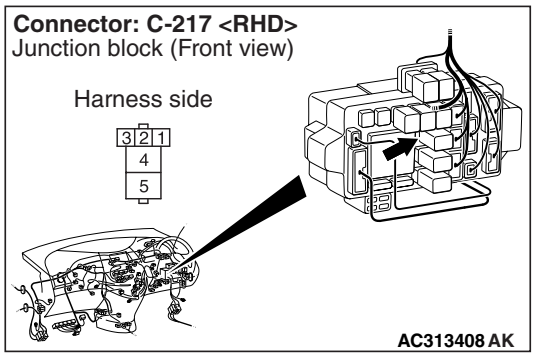

Q: Is the check result normal?
YES : Go to Step 34.
NO : Repair the connector.

Step 34. Check the wiring harness from F-02 power window sub switch (rear: LH) connector terminal No.6 to C-217 power window relay connector terminal No.4.

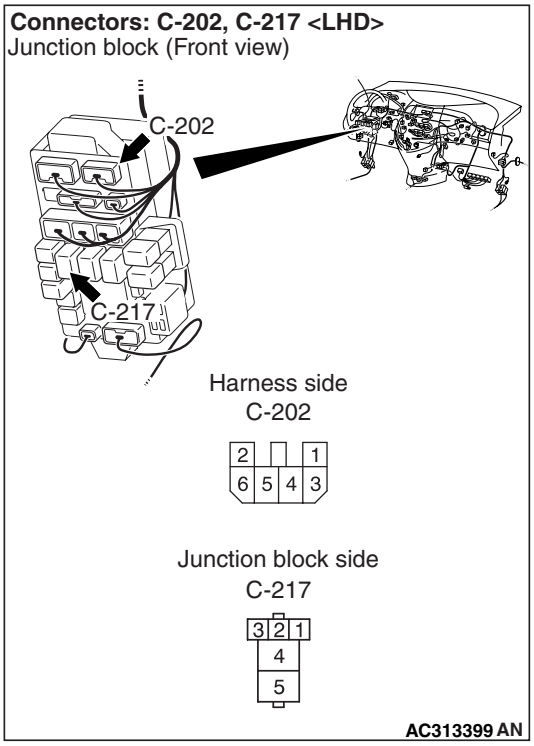

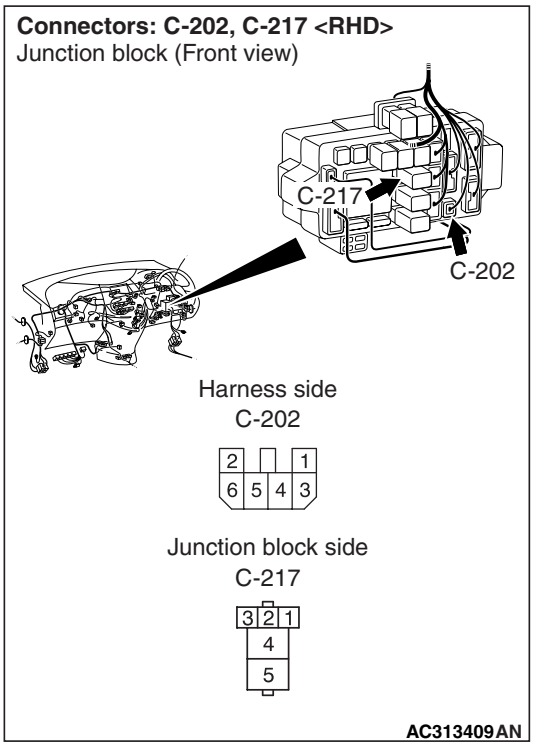

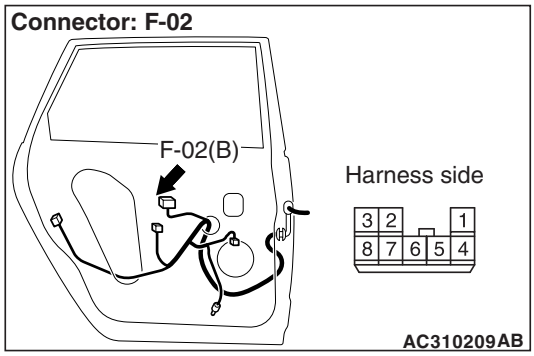

NOTE:

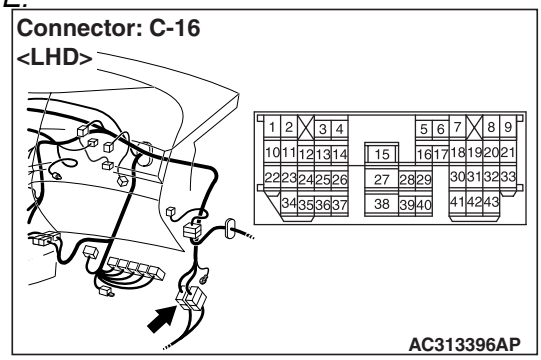

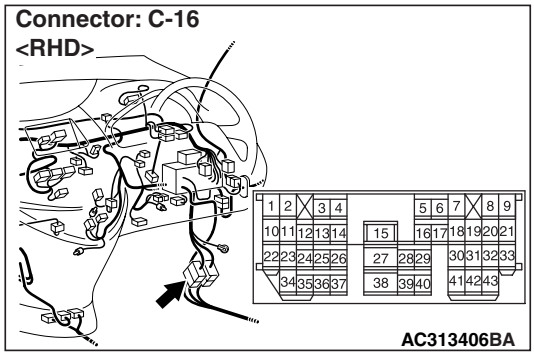

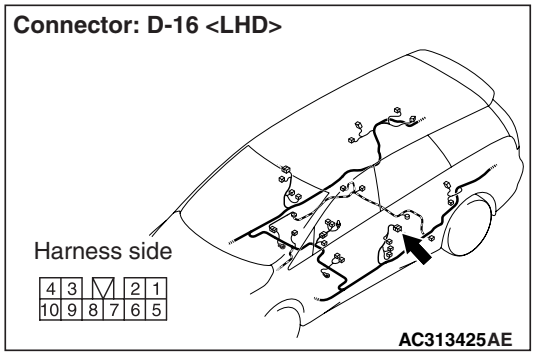

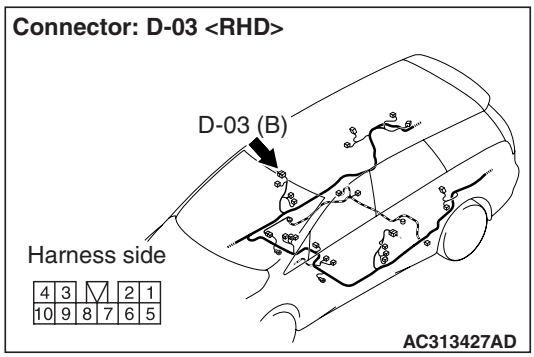

Main Index
Group TOC

Prior to the wiring harness inspection, check intermediate connectors C-16, D-16, and junction block connector C-202, and repair if necessary.

- Check the power supply line for open circuit.

Q: Is the check result normal?

YES : The trouble can be an intermittent malfunction (Refer to GROUP 00 – How to Cope with Intermittent Malfunction P.00-5).

NO : Repair the wiring harness.

Step 35. Check the wiring harness from F-01 power window motor (rear: LH) connector terminal Nos. 1 and 2 to F-02 power window sub switch (rear: LH) connector terminal Nos. 4 and 7.

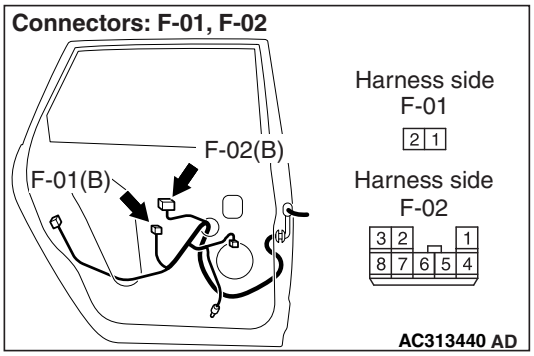

- Check the input and output lines for open or short circuit.

Q: Is the check result normal?

YES : Go to Step 36.

NO : Repair the wiring harness.

Step 36. Check the wiring harness from F-05 power window main switch connector terminal Nos. 1 and 3 to F-02 power window sub switch (front: LH) connector terminal Nos. 8 and 5.

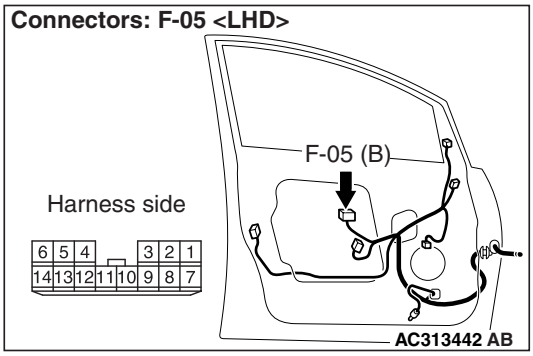

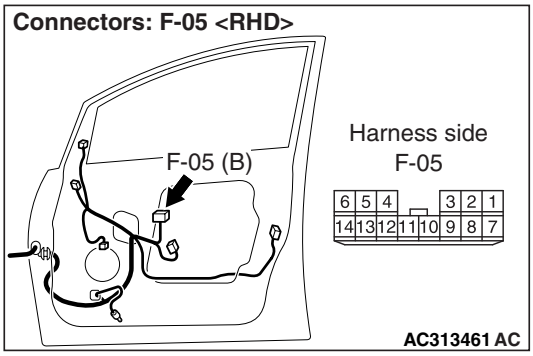

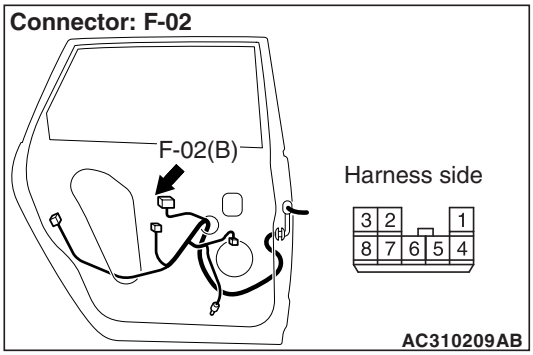

NOTE:

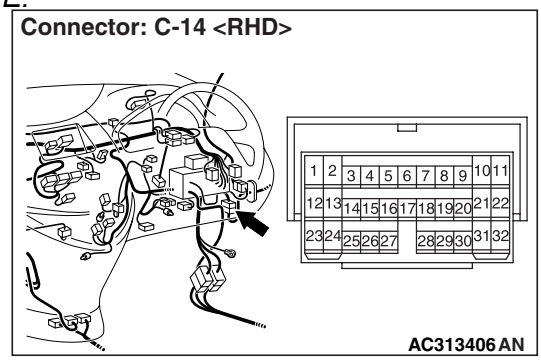

Main Index
Group TOC

Connector: C-15 <RHD>

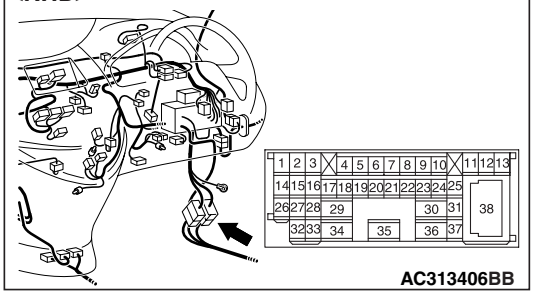

Connector: C-15 <LHD>

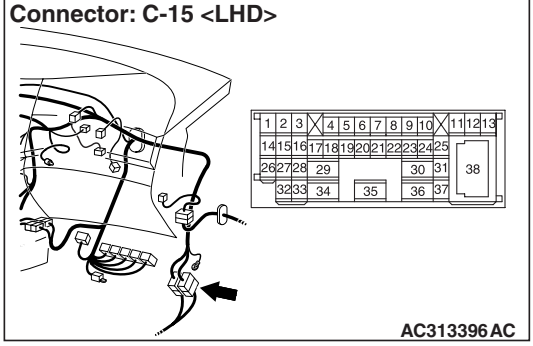

Connector: C-27 <LHD>

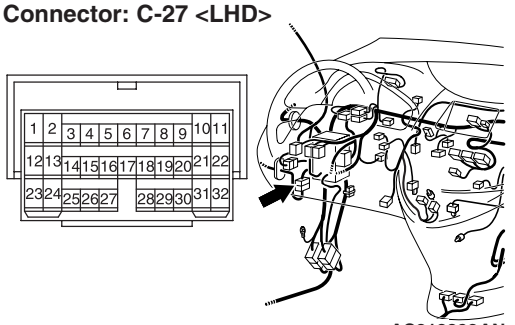

Connector: D-16 <LHD>

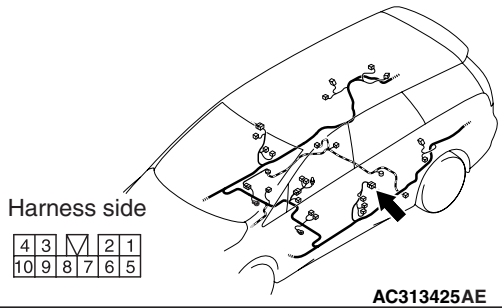

Connector: D-16 <RHD>

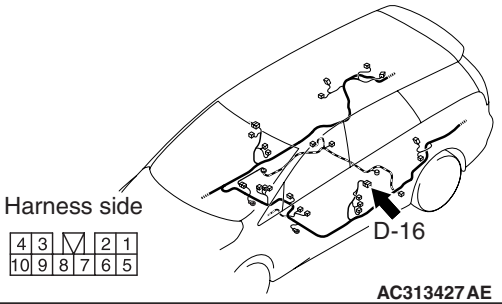

Prior to the wiring harness inspection, check intermediate connectors C-14 <RHD>, C-15, C-27 <LHD>, D-16, and repair if necessary.

- Check the input and output lines for open or short circuit.

Q: Is the check result normal?

YES : The trouble can be an intermittent malfunction (Refer to GROUP 00 – How to Cope with Intermittent Malfunction P.00-5).

NO : Repair the wiring harness.

Main Index
Group TOC

INSPECTION PROCEDURE D-4: Passenger's and/or rear power window(s) do not work by means of the power window main switch.

Power Window (Front: RH) Circuit <LHD>

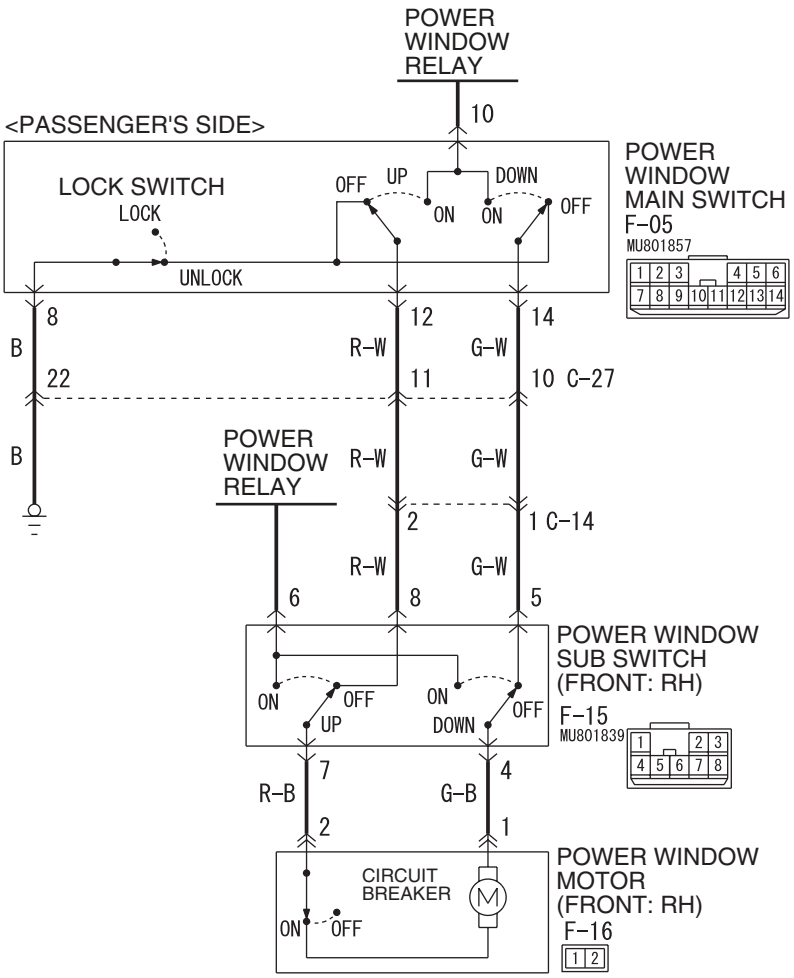

Wire colour code
B : Black LG : Light green G : Green L : Blue W : White Y : Yellow SB : Sky blue
BR : Brown O : Orange GR : Gray R : Red P : Pink V : Violet

W4X54X030A

Main Index
Group TOC

Power Window (Front: RH) Circuit <RHD>

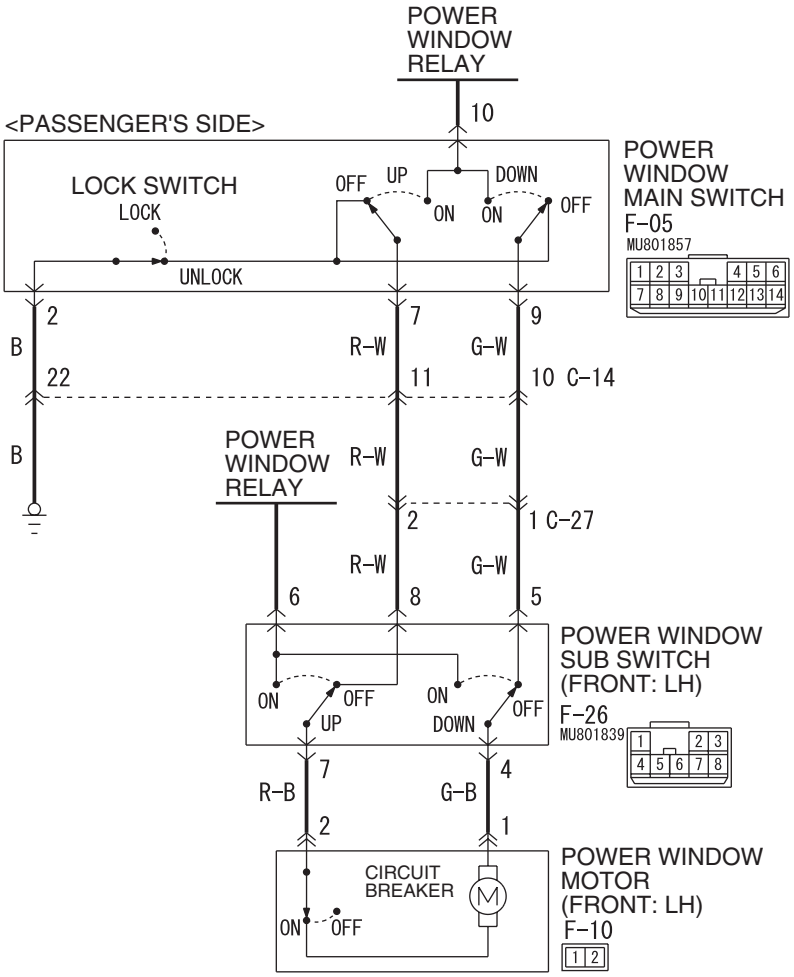

Wire colour code
B : Black LG : Light green G : Green L : Blue W : White Y : Yellow SB : Sky blue
BR : Brown O : Orange GR : Gray R : Red P : Pink V : Violet

W4X54X031A

Main Index
Group TOC

Power Window (Rear) Circuit

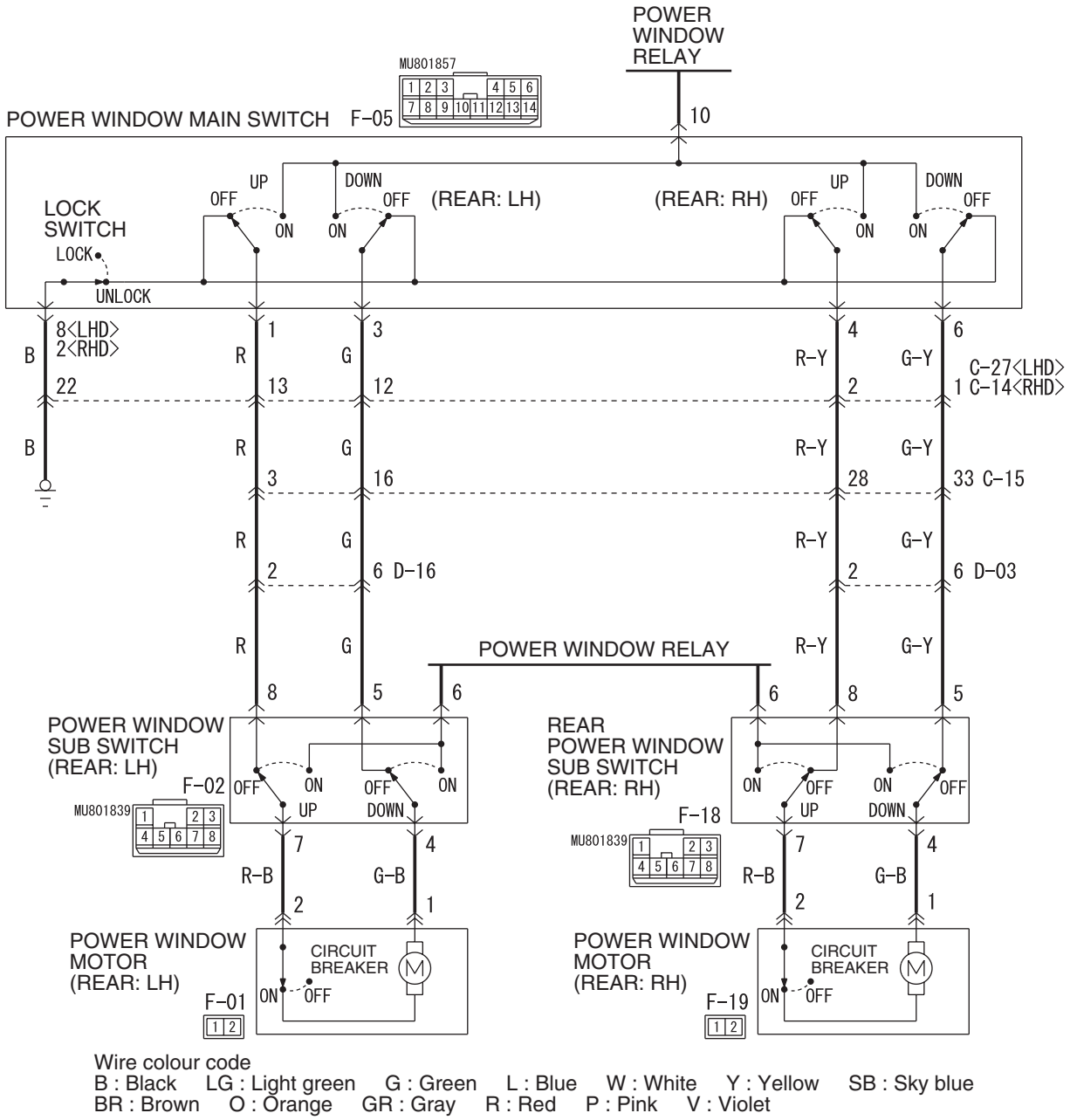

COMMENTS ON TROUBLE SYMPTOM

If the passenger's and/or rear power window does not work by means of the power window main switch, the power window main switch or the respective power window sub switch(es) may be defective.

PROBABLE CAUSES <LH DRIVE VEHICLES>

- Malfunction of the power window main switch
- Malfunction of the power window sub switch (front: RH), power window sub switch (rear: RH) or power window sub switch (rear: LH)
- Damaged harness wires and connectors

PROBABLE CAUSES <RH DRIVE VEHICLES>

- Malfunction of the power window main switch
- Malfunction of the power window sub switch (front: LH), power window sub switch (rear: RH) or power window sub switch (rear: LH)
- Damaged harness wires and connectors

DIAGNOSIS PROCEDURE

Step 1. Check the power window main switch.
Check that the driver's power window works by means of the power window main switch.

Q: Is the check result normal?
YES : Go to Step 2.
NO : Refer to inspection procedure D-2 "Driver's power window does not work by means of the power window main switch P.54B-121 <LH drive vehicles> or P.54B-123 <RH drive vehicles>."

Step 2. Check the power window sub switch.
Check that each power window works by means of the respective power window sub switch when the power window lock switch is turned off.

Q: Is the check result normal?
YES : Go to Step 3.
NO : Refer to inspection procedure D-3 "Relevant power window(s) do not work by means of the front and rear passenger's power window sub switches P.54B-125."

Step 3. Retest the system.
Replace the power window sub switch of the door (except driver's door) that allows no power window operation with the power window main switch. Then use the power window main switch to check the operation of the door, for which the power window sub switch has been replaced.
(1) Replace the power window sub switch of the door (except driver's door), which allows no power window operation with the power window main switch.
(2) Check that the power window main switch can control the power window of the door for which you have replaced the power window sub switch.

Q: Is the check result normal?
YES : The trouble can be an intermittent malfunction (Refer to GROUP 00 – How to Cope with Intermittent Malfunction P.00-5).
NO : Replace the power window main switch.

INSPECTION PROCEDURE D-5: The window glass lowers automatically while it is rising.

COMMENTS ON TROUBLE SYMPTOM

If the sliding resistance is too great when the window is being raised or the window glass encounters an object, the window glass will lower by approximately 150 mm.

POSSIBLE CAUSES

- Improper adjusted door window glass
- Incorrectly installed or warped glass slider
- Malfunction of the power window motor
- Malfunction of the window regulator

DIAGNOSIS PROCEDURE

Step 1. Check the power window operating current.
Check that the power window operating current is normal (Refer to GROUP 42 – Door – On-vehicle Service P.42-32).

Q: Is the check result normal?
YES : Adjust the door window glass (Refer to GROUP 42 – Door – On-vehicle service P.42-29), and then go to Step 2.
NO : Replace the defective power window motor assembly which operating current are abnormal.

Main Index
Group TOC

Step 2. Check that the door window glasses are installed correctly.
Check that the door window glasses are installed correctly. Refer to GROUP 42 – Door – On-vehicle Service P.42-29.

Q: Is the check result normal?
YES : Go to Step 3.
NO : Adjust the door window glass (Refer to GROUP 42 – Door – On-vehicle service P.42-29).

Step 3. Retest the system.
Check that the power window does not lower automatically while it is being raised.

Q: Is the check result normal?
YES : The trouble can be an intermittent malfunction (Refer to GROUP 00 – How to Cope with Intermittent Malfunction P.00-5).
NO : Replace the power window motor assembly of the defective window.

Inspection procedure D-6: The power window timer function does not work normally. <Vehicles for Australia and New Zealand>

⚠ CAUTION
Whenever the ECU is replaced, ensure that the input and output signal circuits are normal.

OPERATION

The ETACS-ECU operates this function in accordance with the input signals below.
- Ignition switch (IG1)
- Driver's door switch
- Passenger's door switch

COMMENTS ON TROUBLE SYMPTOM

If the power window timer function does not work normally, these input signal circuit(s) or the ETACS-ECU may be defective.

PROBABLE CAUSES

- Malfunction of the driver's door switch
- Malfunction of the passenger's door switch
- Malfunction of the ETACS-ECU
- Damaged harness wires and connectors

DIAGNOSTIC PROCEDURE

STEP 1. Check the power window main switch.
Check that all of the front passenger's and rear door power windows can operate by means of the power window main switch.

Q: Is the check result normal?
YES : Go to Step 2.
NO : Refer to Inspection Procedure D-1 "Power windows do not work at all P.54B-111."

STEP 2. Check the power supply circuit.
When the ignition switch is turned to the LOCK (OFF) position, check if the hazard warning lamps illuminate.

Q: Is the check result normal?
YES : Go to Step 3.
NO : Refer to inspection procedure A-2 "Check the ETACS-ECU battery power supply circuit P.54B-71."

Main Index
Group TOC

STEP 3. Pulse check

Check the input signals below, which are related to the power window timer function.

System switch	Check conditions
Ignition switch (IG1)	When turned from ACC to ON
Driver's door switch	When the driver's door is opened
Passenger's door switch	When the passenger's door is opened

OK: The M.U.T.-III sounds or the voltmeter needle fluctuates.

Q: Are the check result normal?

All the signals are received normally. : Go to Step 4.

The ignition switch (IG1) signal is not received. : Refer to inspection procedure P-2 "The ignition switch (IG1) signal is not received P.54B-322."

The driver's door switch signals are not received. : Refer to inspection procedure P-5 "The driver's door switch signal is not received <LH drive vehicles>P.54B-333 or <RH drive vehicles>P.54B-335 ."

The passenger's door switch signals are not received. : Refer to inspection procedure P-12 "All the door switch signals are not received P.54B-358."

STEP 4. Retest the system.

Check that the power window timer function works normally.

Q: Is the check result normal?

YES : The trouble can be an intermittent malfunction (Refer to GROUP 00 – How to Cope with Intermittent Malfunction P.00-5).

NO : Replace the ETACS-ECU.

INSPECTION PROCEDURE D-6: The power window timer function does not work normally. <Except vehicles for Australia and New Zealand>

⚠ CAUTION

Whenever the ECU is replaced, ensure that the input and output signal circuits are normal.

OPERATION

The ETACS-ECU operates this function in accordance with the input signals below.

- Ignition switch (IG1)
- Driver's door switch

COMMENTS ON TROUBLE SYMPTOM

If the power window timer function does not work normally, these input signal circuit(s) or the ETACS-ECU may be defective.

POSSIBLE CAUSES

- Malfunction of the driver's door switch
- Malfunction of the ETACS-ECU
- Damaged harness wires and connectors

DIAGNOSTIC PROCEDURE

Step 1. Check the power window main switch.

Check that all of the front passenger's and rear door power windows can operate by means of the power window main switch.

Q: Is the check result normal?

YES : Go to Step 2.

NO : Refer to Inspection Procedure D-1 "Power windows do not work at all P.54B-111."

Main Index
Group TOC

Step 2. Check the power supply circuit.
When the ignition switch is turned to the LOCK (OFF) position, check if the hazard warning lamps illuminate.

Q: Is the check result normal?
YES : Go to Step 3.
NO : Refer to inspection procedure A-2 "Check the ETACS-ECU battery power supply circuit P.54B-71."

Step 3. Pulse check
Check the input signals below, which are related to the power window timer function.

System switch	Check conditions
Ignition switch (IG1)	When turned from ACC to ON
Driver's door switch	When the driver's door is opened

OK: The M.U.T.-III sounds or the voltmeter needle fluctuates.

Q: Are the check result normal?
All the signals are received normally. : Go to Step 4.
The ignition switch (IG1) signal is not received. : Refer to inspection procedure P-2 "The ignition switch (IG1) signal is not received P.54B-322."
The driver's door switch signals are not received. : Refer to inspection procedure P-5 "The driver's door switch signal is not received <LH drive vehicles>P.54B-333 or <RH drive vehicles>P.54B-335 ."

Step 4. Retest the system.
Check that the power window timer function works normally.

Q: Is the check result normal?
YES : The trouble can be an intermittent malfunction (Refer to GROUP 00 – How to Cope with Intermittent Malfunction P.00-5).
NO : Replace the ETACS-ECU.

KEYLESS ENTRY SYSTEM

Inspection procedure E-1: Keyless entry system does not work.

⚠ CAUTION
Whenever the ECU is replaced, ensure that the input and output signal circuits are normal.

Keyless Entry System Function Circuit

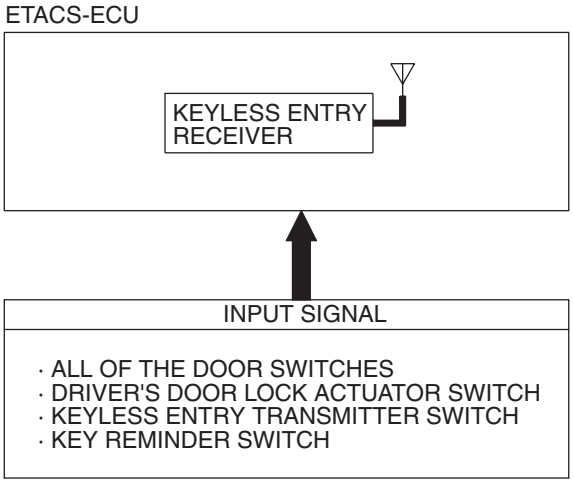

W3Z16E04AA

Main Index
Group TOC

COMMENTS ON TROUBLE SYMPTOM

If the keyless entry system does not work normally, the input signal circuits to the components below or the ETACS-ECU may be defective.

- Key reminder switch
- All of the door switches
- Keyless entry transmitter
- Driver's door lock actuator

PROBABLE CAUSES

- Malfunction of the key reminder switch
- Malfunction of the door switches
- Malfunction of the keyless entry transmitter
- Malfunction of the driver's door lock actuator
- Malfunction of the ETACS-ECU
- Damaged harness wires and connectors

DIAGNOSIS PROCEDURE

STEP 1. Check the operation of the central door locking system.

Check that the central door locking system works normally.

Q: Is the check result normal?

YES : Go to Step 2.

NO : Refer to Inspection Procedure C-1 "Central door locking system does not work P.54B-87."

STEP 2. Check the power supply circuit.

When the ignition switch is turned to the LOCK (OFF) position, check if the hazard warning lamps illuminate.

Q: Is the check result normal?

YES : Go to Step 3.

NO : Refer to inspection procedure A-2 "Check the ETACS-ECU battery power supply circuit P.54B-71."

STEP 3. Pulse check

Check the input signals below which are related to the keyless entry system.

System switch	Check condition
Key reminder switch	When the inserted ignition key is pulled out
Driver's door switch	Driver's door opened.
Passenger's door switch	Passenger's door opened.
Rear door (RH) switch	Rear door (RH) opened
Rear door (LH) switch	Rear door (LH) opened
Tailgate switch	A tailgate opened
Keyless entry transmitter switch	When the switch is turned from off to on

OK: The M.U.T.-III sounds or the voltmeter needle fluctuates.

Q: Are the check result normal?

All the signals are received normally. : Go to Step 4.

The key reminder switch signal is not received. : Refer to inspection procedure P-10 "The key reminder switch signal is not received P.54B-350."

All the door switch signals are not received. : Refer to inspection procedure P-12 "All the door switch signals are not received P.54B-358."

The keyless entry transmitter switch signal is not received. : Refer to inspection procedure P-21 "Each switch signal of the keyless entry transmitter is not received P.54B-403."

STEP 4. Retest the system.

Check the keyless entry system works normally.

Q: Is the check result normal?

YES : The trouble can be an intermittent malfunction (Refer to GROUP 00 – How to Cope with Intermittent Malfunction P.00-5).

NO : Replace the ETACS-ECU.

Main Index
Group TOC

Inspection procedure E-2: Keyless Entry hazard lamp answerback function or the Room Lamp Answerback Function does not Work Normally.

⚠ CAUTION
Whenever the ECU is replaced, ensure that the input and output signal circuits are normal.

COMMENTS ON TROUBLE SYMPTOM

If the hazard warning lamp and the room lamp work normally, the ETACS-ECU may be defective. Alternatively, it is possible that the keyless entry hazard lamp answerback function was disabled by the customize function.

PROBABLE CAUSES

- Defective turn-signal lamp
- Malfunction of the room lamp
- Malfunction of the ETACS-ECU
- Damaged harness wires and connectors

DIAGNOSIS PROCEDURE

STEP 1. Check the operation of the hazard warning lamp.
Check that the hazard warning lamps illuminate normally.

Q: Is the check result normal?
YES : Go to Step 2.
NO : Refer to inspection procedure M-2 "The hazard warning lamps do not illuminate P.54B-257."

STEP 2. Check the operation of the room lamps.
Check that the room lamps illuminate normally.

Q: Is the check result normal?
YES : Go to Step 3.
NO : Refer to inspection procedure O-2 "The room lamp does not illuminate normally P.54B-288."

STEP 3. Check the operation of the keyless entry system.
If the keyless entry system is operated, check that the doors can be locked and unlocked normally.

Q: Is the check result normal?
YES : Go to Step 4.
NO : Refer to inspection procedure E-1 "Keyless entry system does not work P.54B-148."

STEP 4. Check the power supply circuit.
When the ignition switch is turned to the LOCK (OFF) position, check if the hazard warning lamps illuminate.

Q: Is the check result normal?
YES : Go to Step 5.
NO : Refer to inspection procedure A-2 "Check the ETACS-ECU battery power supply circuit P.54B-71."

STEP 5. Check the customize function.
Check that the keyless entry hazard lamp answerback function has been enabled by using the customize function.

⚠ CAUTION
The SWS monitor must be used in order to confirm and change that setting. Use the SWS monitor to confirm and/or change the customized function.

Q: Is the check result normal?
YES : Go to Step 6.
NO : Enable the keyless entry hazard lamp answerback function by using the customize function. (Refer to GROUP 54C customize function P.54C-432).

STEP 6. Retest the system.
Check that the keyless entry hazard lamp answerback function or the room lamp answerback function work normally.

Q: Is the check result normal?
YES : The trouble can be an intermittent malfunction (Refer to GROUP 00 – How to Cope with Intermittent Malfunction P.00-5).
NO : Replace the ETACS-ECU.

Main Index
Group TOC

INSPECTION PROCEDURE E-3: Encrypted Code cannot be Registered.

⚠ CAUTION
Whenever the ECU is replaced, ensure that the input and output signal circuits are normal.

Encrypted Transmitter Code Register Mode

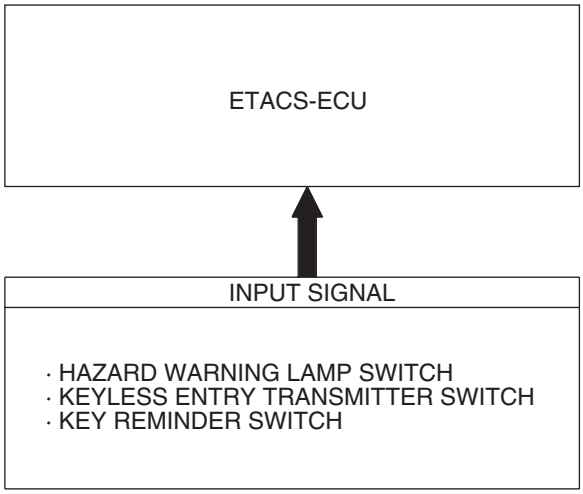

W4X54E164A

COMMENTS ON TROUBLE SYMPTOM

If the encrypted code registration mode is not entered, the key reminder switch, the hazard warning lamp switch or the ETACS-ECU may be defective.
If the registration is not possible although the registration mode is entered, the keyless entry transmitter or the ETACS-ECU may be defective.

POSSIBLE CAUSES

- Malfunction of the keyless entry transmitter
- Malfunction of the ETACS-ECU
- Damaged harness wires and connectors

DIAGNOSIS PROCEDURE

Step 1. Check the encrypted code registration mode.
Check that the encrypted code registration mode is entered.

Q: Is the check result normal?
YES : Go to Step 3.
NO : Go to Step 2.

Step 2. Pulse check
Check the input signals below which are related to the encrypted code of the keyless entry transmitter.

System switch	Check condition
Key reminder switch	When the inserted ignition key is pulled out
Hazard warning lamp switch	When the switch is turned from off to on
Keyless entry transmitter switch	When the switch is turned from off to on

OK: The M.U.T.-III sounds or the voltmeter needle fluctuates.

Main Index
Group TOC

Q: Are the check result normal?

All the signals are received normally. : Go to Step 3.

The key reminder switch signal is not received. : Refer to inspection procedure P-10 "The key reminder switch signal is not received P.54B-350."

The hazard warning lamp switch signal is not received. : Refer to inspection procedure P-11 "The hazard warning lamp switch signal is not received P.54B-354."

The keyless entry transmitter switch signal is not received. : Refer to inspection procedure P-21 "Each switch signal of the keyless entry transmitter is not received P.54B-403."

Step 3. Pulse check

Check the input signals below which are related to the encrypted code of the keyless entry transmitter.

System switch	Check condition
Keyless entry transmitter switch	When the switch is turned from off to on

OK: The M.U.T.-III sounds or the voltmeter needle fluctuates.

Q: Is the check result normal?

YES : Go to Step 4.

NO : Refer to inspection procedure P-21 "Each switch signal of the keyless entry transmitter is not received P.54B-403."

Step 4. Retest the system.

Check that the encrypted code can be registered.

Q: Is the check result normal?

YES : The trouble can be an intermittent malfunction (Refer to GROUP 00 – How to Cope with Intermittent Malfunction P.00-5).

NO : Replace the ETACS-ECU.

Inspection procedure E-4: The timer lock function does not work after the doors have been unlocked by the keyless entry system.

⚠ CAUTION

Whenever the ECU is replaced, ensure that the input and output signal circuits are normal.

COMMENT ON TROUBLE SYMPTOM

If the keyless entry timer lock does not work normally, the input signal circuit(s) to the keyless entry transmitter or the ETACS-ECU may be defective.

PROBABLE CAUSES

- Malfunction of the keyless entry transmitter
- Function diagnosis by using the SWS monitor Malfunction of the ETACS-ECU
- Damaged harness wires and connectors

DIAGNOSIS PROCEDURE

STEP 1. Check the operation of the keyless entry system.

Check that the keyless entry system works normally.

Q: Is the check result normal?

YES : Go to Step 2.

NO : Refer to inspection procedure E-1 "Keyless entry system does not work P.54B-148."

STEP 2. Check the customize function.

Check that the keyless entry timer lock function has been enabled by using the customize function.

⚠ CAUTION

The SWS monitor must be used in order to confirm and change that setting. Use the SWS monitor to confirm and/or change the customized function.

Q: Is the check result normal?

YES : Go to Step 3.

NO : Enable the keyless entry timer lock function by using the SWS monitor customise function. (Refer to GROUP 54C custamise function P.54C-432).

STEP 3. Retest the system.

Check that the timer lock works normally.

Q: Is the check result normal?

YES : The trouble can be an intermittent malfunction (Refer to GROUP 00 – How to Cope with Intermittent Malfunction P.00-5).

NO : Replace the ETACS-ECU.

Main Index
Group TOC

INSPECTION PROCEDURE E-5: Multimode keyless entry system function does not work at all.

⚠ CAUTION
Whenever the ECU is replaced, ensure that the input and output signal circuits are normal.

COMMENTS ON TROUBLE SYMPTOM

If the electric-folding door mirrors work normally, the ETACS-ECU may be defective.

POSSIBLE CAUSES

- Malfunction of the ETACS-ECU
- Malfunction of the keyless entry transmitter

DIAGNOSTIC PROCEDURE

Step 1. Check the operation of the electric folding outside rear-view mirrors.
Check that the electric folding outside rear-view mirrors operate normally by using the remote controlled mirror switch (folding/unfolding switch).

Q: Is the check result normal?
YES : Go to Step 2.
NO : Refer to inspection procedure I-1 "Electric retractable remote controlled door mirror does not work at all P.54B-213."

Step 2. Check the keyless entry transmitter.
Check that the keyless entry system works normally.

Q: Is the check result normal?
YES : Go to Step 3.
NO : Refer to inspection procedure E-1 "Keyless entry system does not work P.54B-148."

Step 3. Check the power supply circuit.
When the ignition switch is turned to the LOCK (OFF) position, check if the hazard warning lamps illuminate.

Q: Is the check result normal?
YES : Go to Step 4.
NO : Refer to inspection procedure A-2 "Check the ETACS-ECU battery power supply circuit P.54B-71."

Step 4. Pulse check
Check the input signals which are related to the multimode keyless entry system.

System switch	Check conditions
Keyless entry transmitter switch	When the switch is turned from off to on

OK: The M.U.T.-III sounds or the voltmeter needle fluctuates.

Q: Is the check result normal?
YES : Go to Step 5.
NO : Refer to inspection procedure P-21 "Each switch signal of the keyless entry transmitter is not received P.54B-403."

Step 5. Retest the system.
Check that the multimode keyless entry system works normally.

Q: Is the check result normal?
YES : The trouble can be an intermittent malfunction (Refer to GROUP 00 – How to Cope with Intermittent Malfunction P.00-5).
NO : Replace the ETACS-ECU.

Main Index
Group TOC

SUNROOF

INSPECTION PROCEDURE F-1: The sunroof does not work at all.

⚠ CAUTION
Whenever the ECU is replaced, ensure that the input and output signal circuits are normal.

Sunroof Motor Assembly Power Supply Circuit

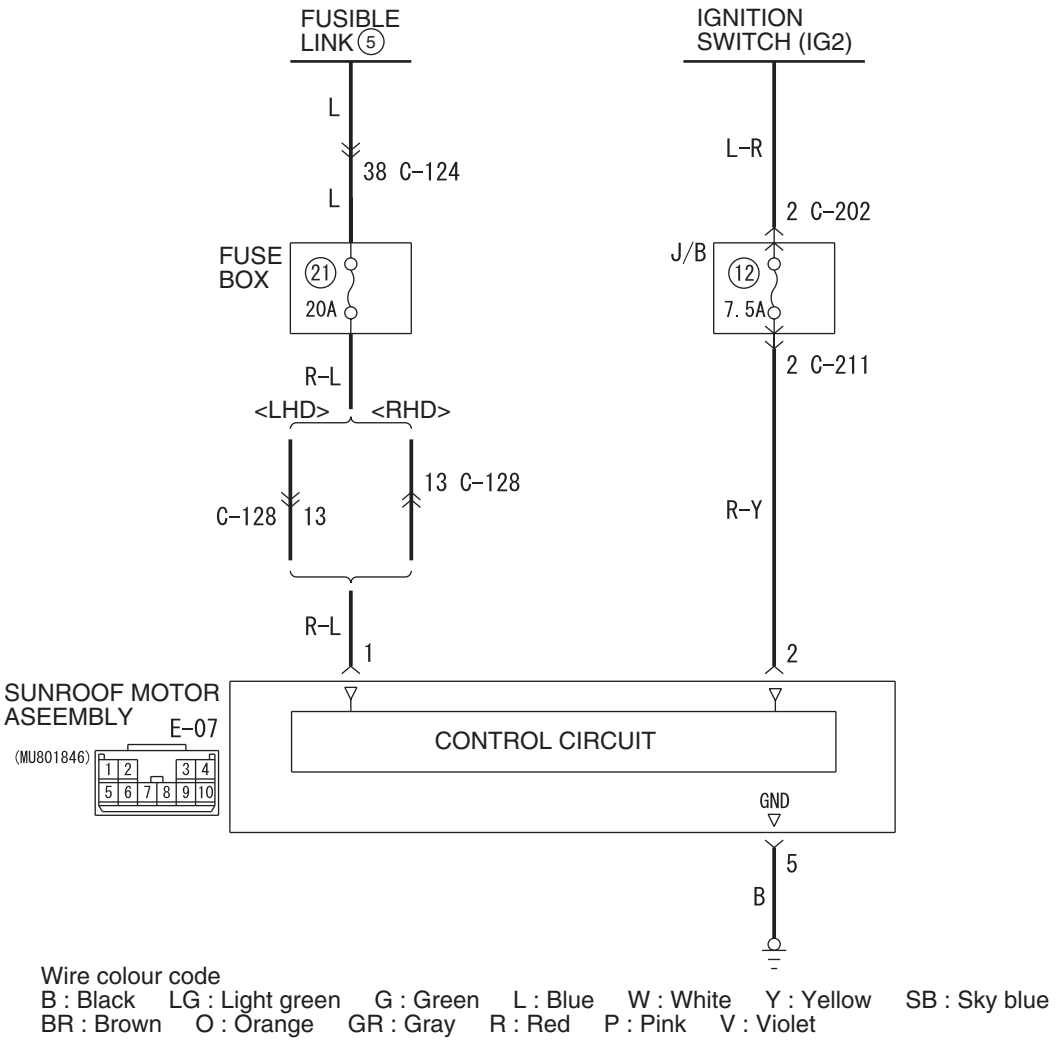

Wire colour code
B : Black LG : Light green G : Green L : Blue W : White Y : Yellow SB : Sky blue
BR : Brown O : Orange GR : Gray R : Red P : Pink V : Violet

W4X54E107A

COMMENTS ON TROUBLE SYMPTOM

If the sunroof does not work at all, these power supply circuit(s), these earth circuit(s), sunroof switch or the sunroof motor assembly (sunroof-ECU) may be defective.

POSSIBLE CAUSES

- Malfunction of the sunroof switch
- Malfunction of the sunroof motor assembly (sunroof-ECU)
- Malfunction of the power window main switch
- Damaged harness wires and connectors

Main Index
Group TOC

DIAGNOSTIC PROCEDURE

Step 1. Check the power window main switch.
Check that the power window lock switch is turned off.

Q: Is the check result normal?
YES : Go to Step 2.
NO : Turn off the power window lock switch.

Step 2. Pulse check
Check the input signals from the ignition switch (IG1) and the sunroof switch.

System switch	Check conditions
Ignition switch (IG1)	When turned from ACC to ON
sunroof switch	When the sunroof switch is opened or closed

OK: The M.U.T.-III sounds or the voltmeter needle fluctuates.

Q: Are the check result normal?
All the signals are received normally. : Go to Step 3.
The ignition switch (IG1) signal is not received. : Refer to inspection procedure P-2 "The ignition switch (IG1) signal is not received P.54B-322."
The sunroof switch signal is not received. : Refer to inspection procedure P-9 "When the sunroof switch is operated, the switch signals are not received P.54B-344."

Step 3. Check the power window main switch.
Check that all of the front passenger's and rear door power windows can operate by means of the power window main switch.

Q: Is the check result normal?
YES : Go to Step 4.
NO : Refer to Inspection Procedure D-1 "Power windows do not work at all P.54B-111."

Step 4. Connector check: E-07 sunroof motor assembly connector

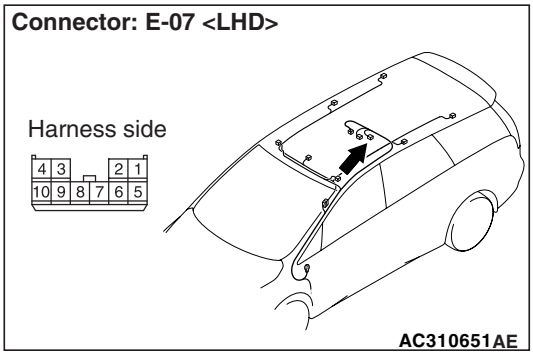

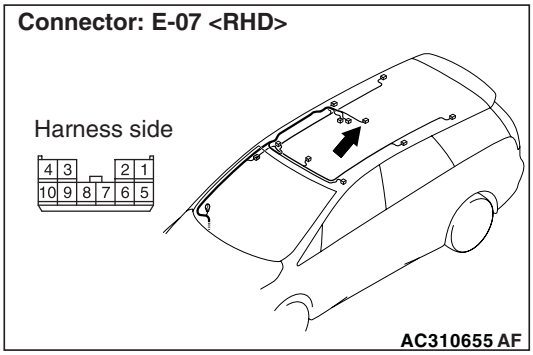

Q: Is the check result normal?
YES : Go to Step 5.
NO : Repair the connector.

Main Index
Group TOC

Step 5. Voltage measurement at the E-07 sunroof motor assembly connector.

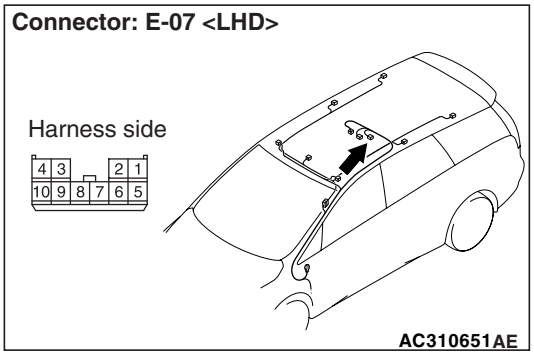

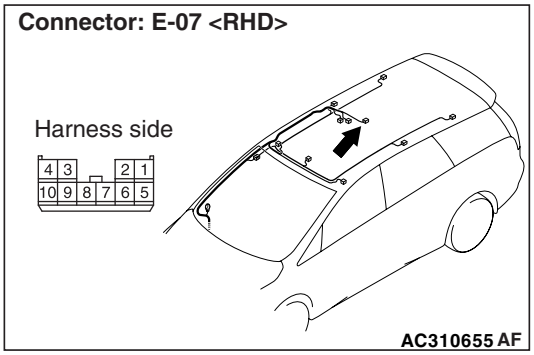

(1) Disconnect the sunroof motor assembly connector, and measure at the harness side.

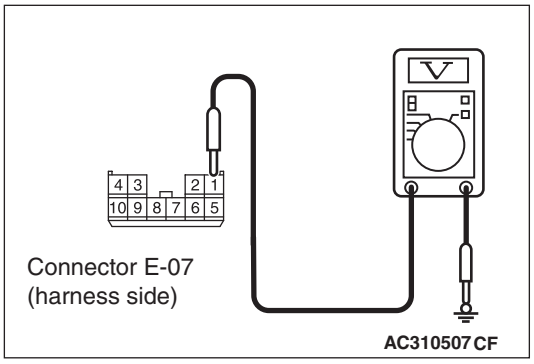

(2) Check the voltage between the E-07 sunroof motor assembly connector terminal No.1 and body earth.

OK: Battery positive voltage

Q: Is the check result normal?

YES : Go to Step 7.

NO : Go to Step 6.

Step 6. Check the wiring harness between E-07 sunroof motor assembly connector terminal No.1 and the fusible link (5).

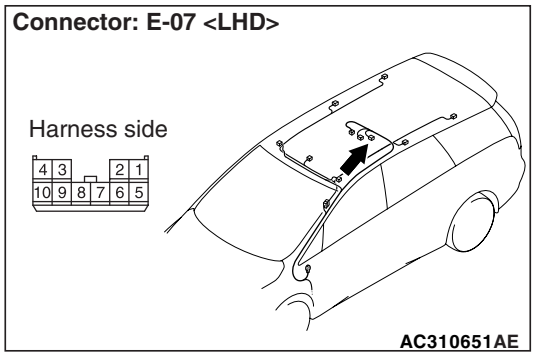

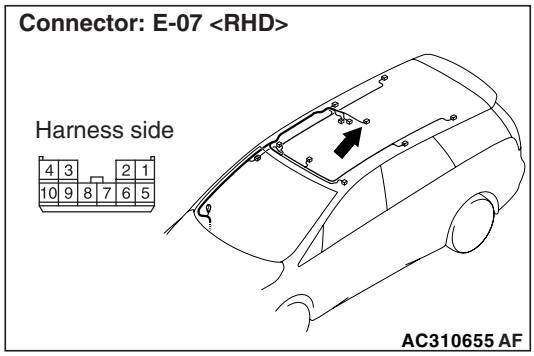

NOTE:

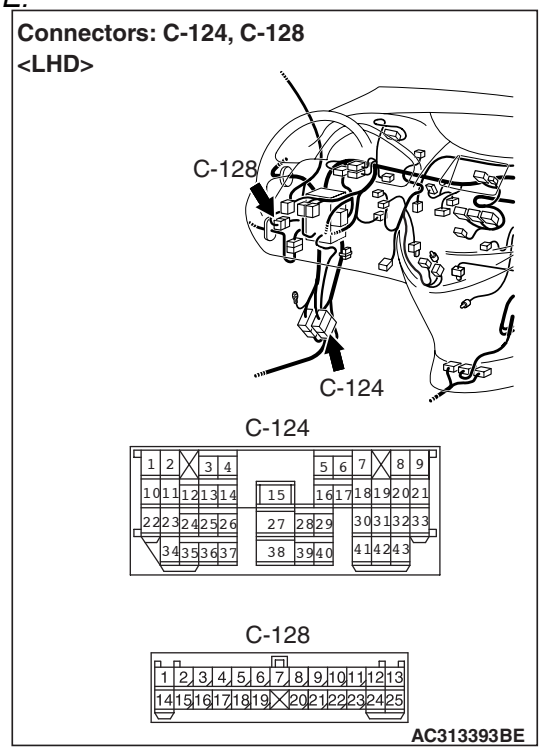

Main Index
Group TOC

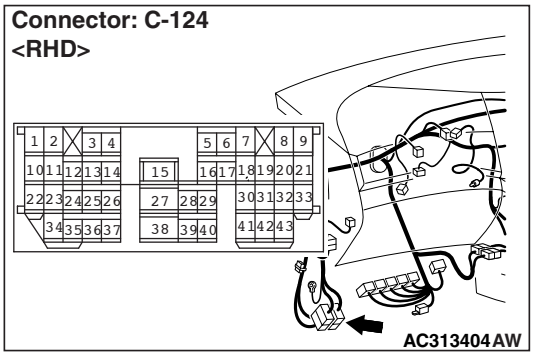

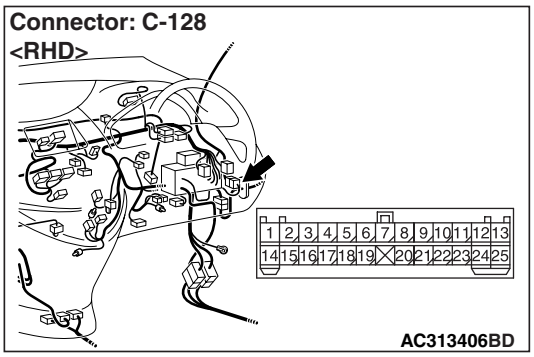

Prior to the wiring harness inspection, check intermediate connector C-124, C-128, and repair if necessary.

- Check the power supply line for open circuit.

Q: Is the check result normal?

YES : The trouble can be an intermittent malfunction (Refer to GROUP 00 – How to Cope with Intermittent Malfunction P.00-5).

NO : Repair the wiring harness.

Step 7. Voltage measurement at the E-07 sunroof motor assembly connector.

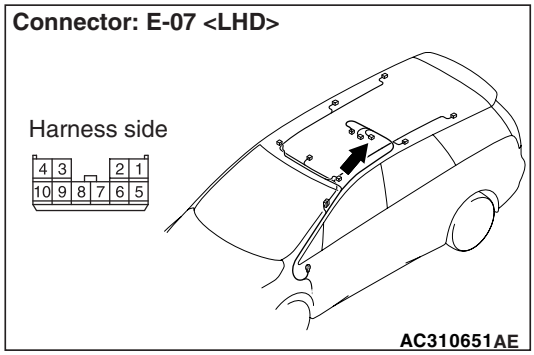

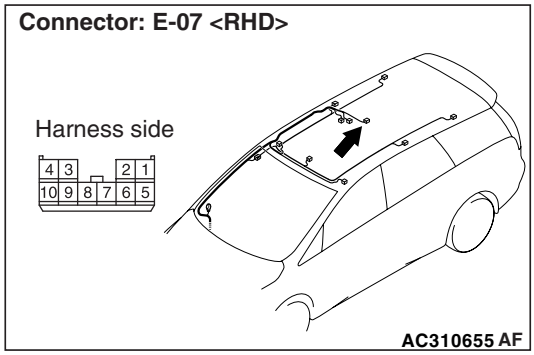

(1) Disconnect the sunroof motor assembly connector, and measure at the harness side.

(2) Ignition switch: ON

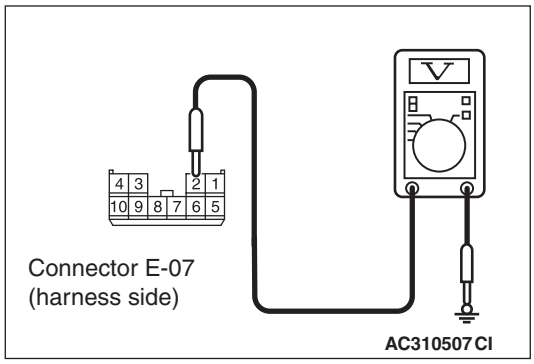

(3) Check the voltage between the E-07 sunroof motor assembly connector terminal No.2 and body earth.

OK: Battery positive voltage

Q: Is the check result normal?

YES : Go to Step 9.

NO : Go to Step 8.

Main Index
Group TOC

Step 8. Check the wiring harness between E-07 sunroof motor assembly connector terminal No.2 and the ignition switch (IG2).

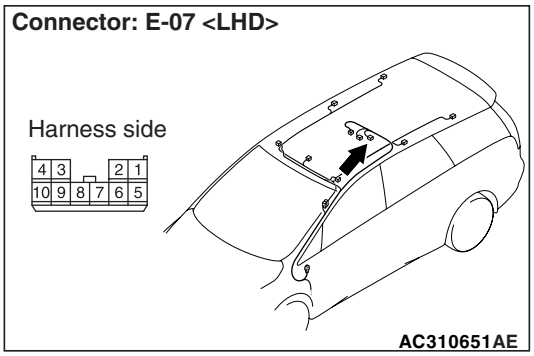

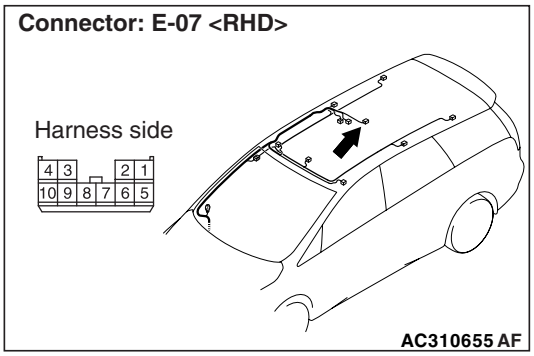

NOTE:

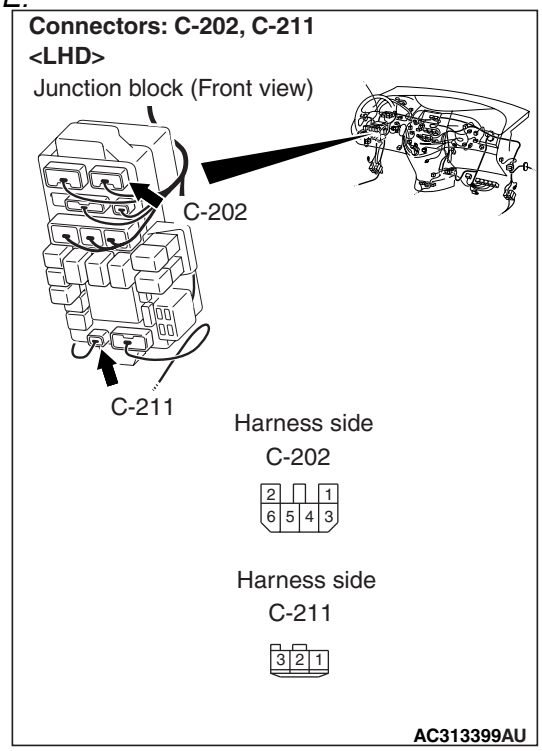

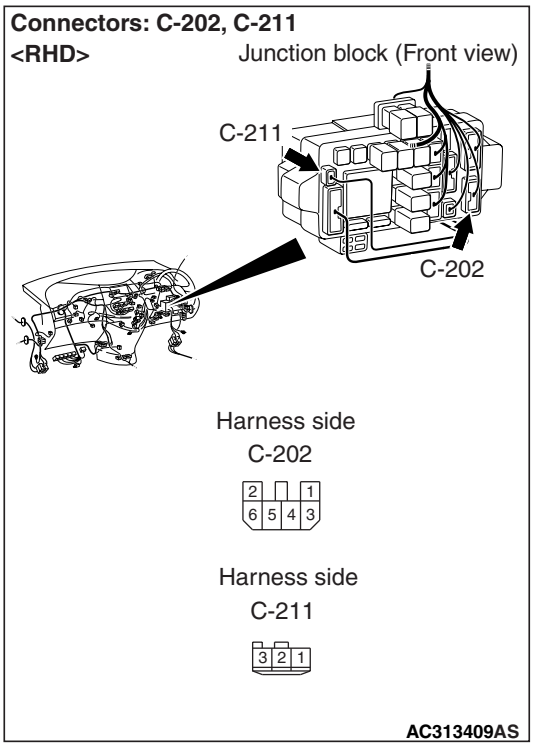

Prior to the wiring harness inspection, check junction block connectors C-211, C-202, and repair if necessary.

- Check the power supply line for open circuit.

Q: Is the check result normal?

YES : The trouble can be an intermittent malfunction (Refer to GROUP 00 – How to Cope with Intermittent Malfunction P.00-5).

NO : Repair the wiring harness.

Main Index
Group TOC

Step 9. Resistance measurement at the E-07 sunroof motor assembly connector.

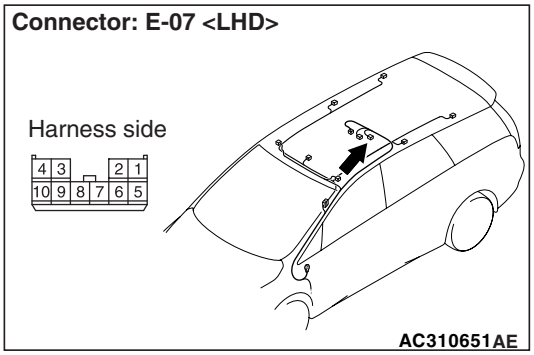

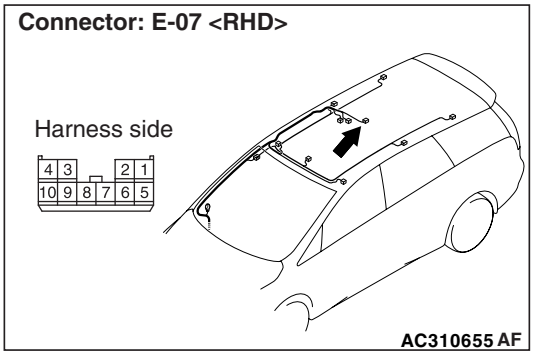

(1) Disconnect the sunroof motor assembly connector, and measure at the harness side.

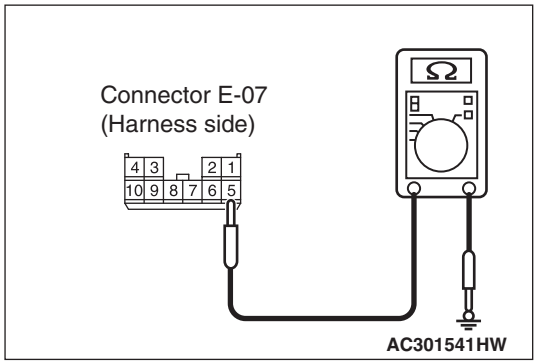

(2) Check the resistance between E-07 sunroof motor assembly connector terminal No.5 and body earth.

OK: 2Ω or less

Q: Is the check result normal?

YES : Go to Step 11.
NO : Go to Step 10.

Step 10. Check the wiring harness between E-07 sunroof motor assembly connector terminal No.5 and body earth.

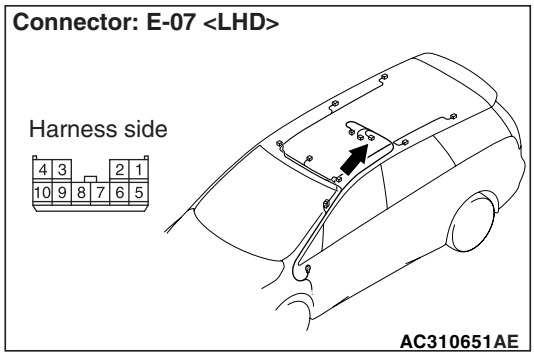

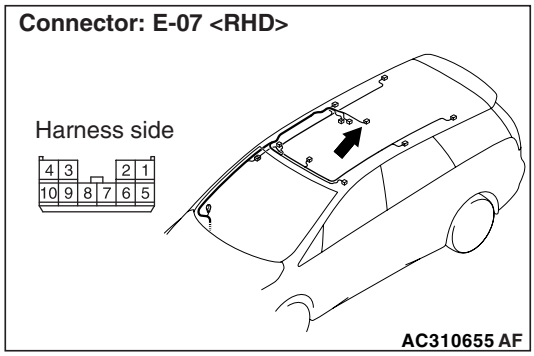

- Check body earth line for open circuit.

Q: Is the check result normal?

YES : The trouble can be an intermittent malfunction (Refer to GROUP 00 – How to Cope with Intermittent Malfunction P.00-5).
NO : Repair the wiring harness.

Step 11. Retest the system.

The sunroof assembly should now work normally.

Q: Is the check result normal?

YES : The trouble can be an intermittent malfunction (Refer to GROUP 00 – How to Cope with Intermittent Malfunction P.00-5).
NO : Replace the sunroof motor assembly.

Main Index
Group TOC

INSPECTION PROCEDURE F-2: Any of the sunroof switch positions is defective.

⚠ CAUTION
Whenever the ECU is replaced, ensure that the input and output signal circuits are normal.

Sunroof Switch Circuit

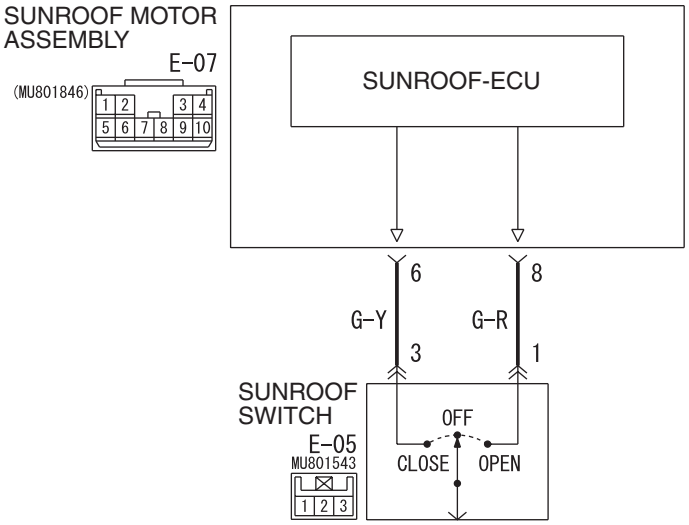

Wire colour code
B : Black LG : Light green G : Green L : Blue W : White Y : Yellow SB : Sky blue
BR : Brown O : Orange GR : Gray R : Red P : Pink V : Violet

W4X54E106A

COMMENTS ON TROUBLE SYMPTOM

If any of the sunroof switch positions is defective, the communication line between the sunroof switch and the sunroof motor assembly (sunroof-ECU) may be defective.

POSSIBLE CAUSES

- Malfunction of the sunroof switch
- Malfunction of the sunroof motor assembly (sunroof-ECU)
- Damaged harness wires and connectors

Main Index
Group TOC

DIAGNOSTIC PROCEDURE

Step 1. Connector check: E-05 sunroof switch connector

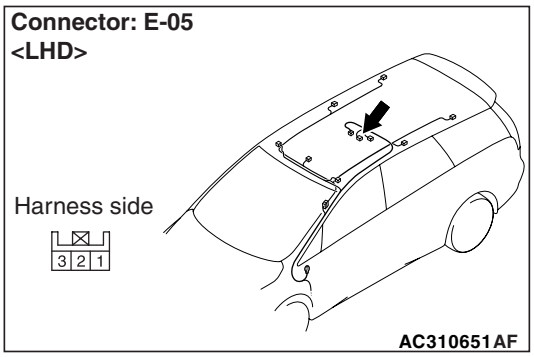

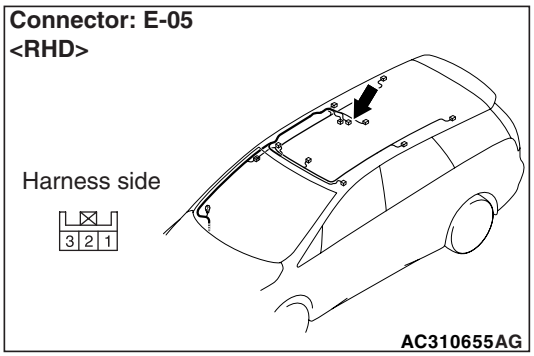

Q: Is the check result normal?
YES : Go to Step 2.
NO : Repair the connector.

Step 2. Check the sunroof switch.

Refer to GROUP 42 – Sunroof P.42-78.

Q: Is the check result normal?
YES : Go to Step 3.
NO : Replace the sunroof switch.

Step 3. Connector check: E-07 sunroof motor assembly connector

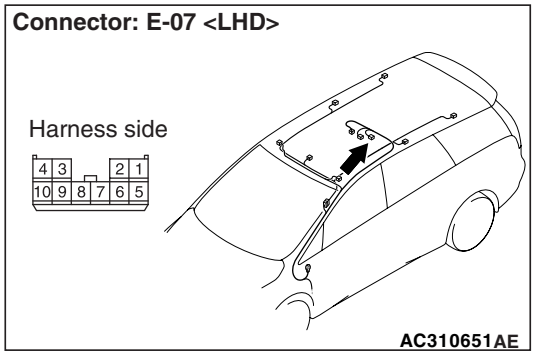

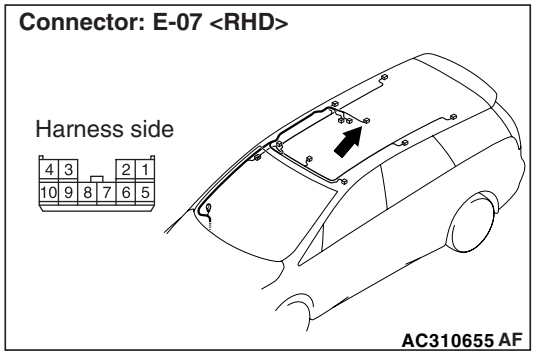

Q: Is the check result normal?
YES : Go to Step 4.
NO : Repair the connector.

Step 4. Retest the system.

Q: Which switch position is defective?
"OPEN" : Go to Step 5.
"CLOSE" : Go to Step 6.

Main Index
Group TOC

Step 5. Check the wiring harness between E-07 sunroof motor assembly connector terminal No.8 and E-05 sunroof switch connector terminal No.1.

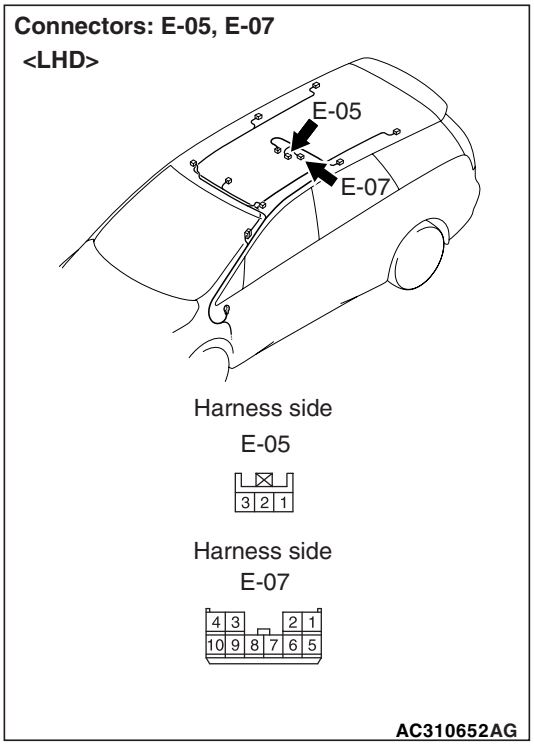

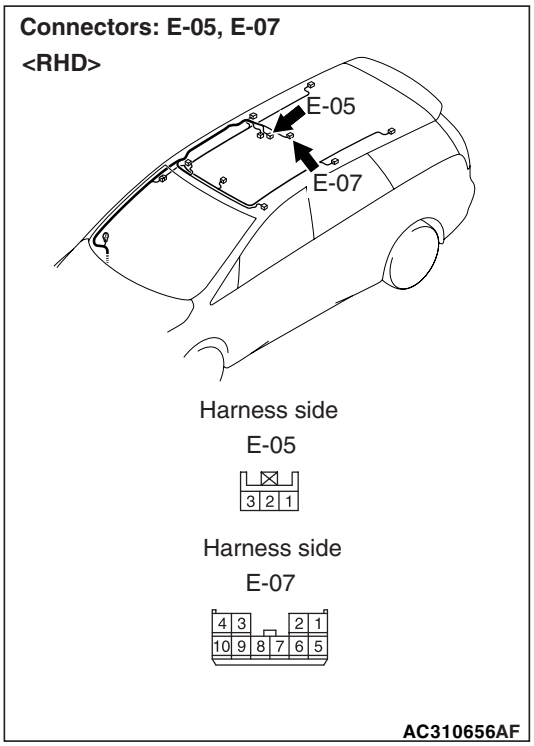

- Check the communication line for open circuit.

Q: Is the check result normal?
YES : Replace the sunroof motor assembly.
NO : Repair the wiring harness.

Step 6. Check the wiring harness between E-07 sunroof motor assembly connector terminal No.6 and E-05 sunroof switch connector terminal No.3.

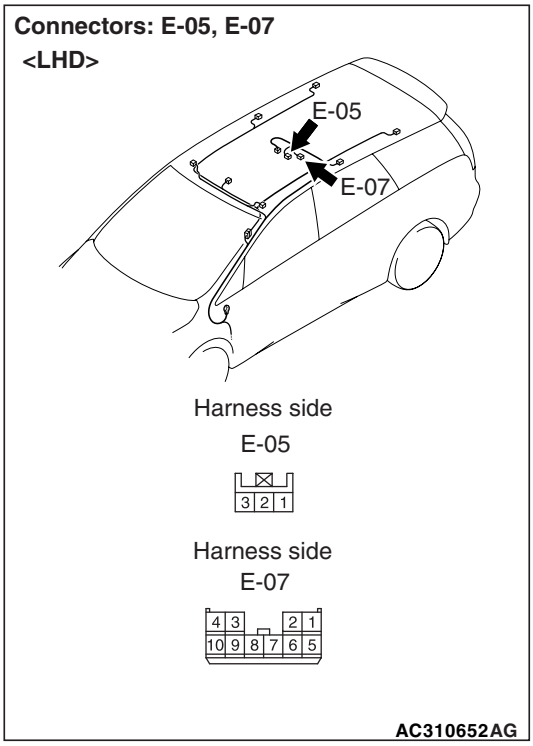

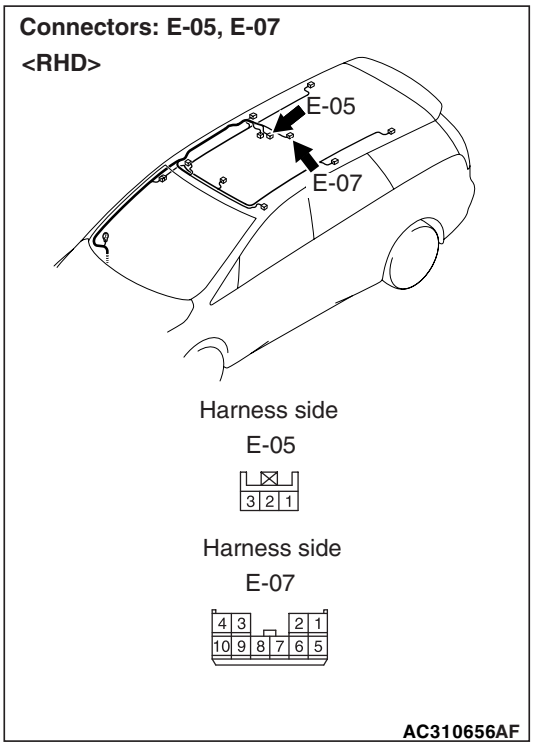

- Check the communication line for open circuit.

Q: Is the check result normal?
YES : Replace the sunroof motor assembly.
NO : Repair the wiring harness.

Main Index
Group TOC

INSPECTION PROCEDURE F-3: Sunroof timer function does not work normally. <Vehicles for Australia and New Zealand>

⚠ CAUTION

Whenever the ECU is replaced, ensure that the input and output signal circuits are normal.

Sunroof Timer Function

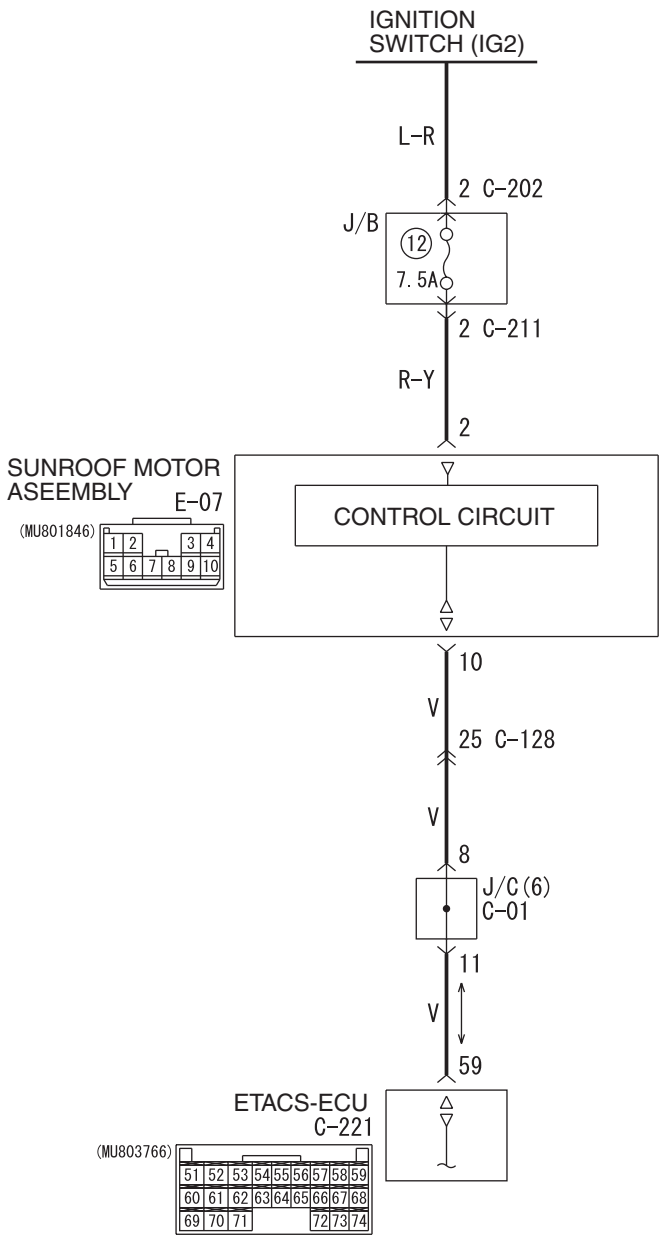

Wire colour code
B : Black LG : Light green G : Green L : Blue W : White Y : Yellow SB : Sky blue
BR : Brown O : Orange GR : Gray R : Red P : Pink V : Violet

W6X54X093A

Main Index
Group TOC

COMMENTS ON TROUBLE SYMPTOM

If the sunroof timer function does not work, the input circuit from the ignition switch (IG1), the driver's door switch, or the passenger's door switch, the communication lines between the ETACS-ECU and the sunroof motor assembly (sunroof-ECU), the sunroof motor assembly (sunroof-ECU) or the ETACS-ECU may be defective.

POSSIBLE CAUSES

- Malfunction of the driver’s door switch
- Malfunction of the passenger’s door switch
- Malfunction of ETACS-ECU
- Malfunction of the sunroof motor assembly (sunroof-ECU)
- Damaged harness wires and connectors

DIAGNOSTIC PROCEDURE

Step 1. Pulse check

Check the input signals below, which are related to the sunroof timer function.

System switch	Check conditions
Ignition switch (IG1)	When turned from ACC to ON
Driver's door switch	When the driver's door is opened
Passenger’s door switch	When the passenger's door is opened

OK: The M.U.T.-III sounds or the voltmeter needle fluctuates.

Q: Are the check result normal?

All the signals are received normally. : Go to Step 2.

The ignition switch (IG1) signal is not received. : Refer to inspection procedure P-2 "The ignition switch (IG1) signal is not received P.54B-322."

The driver’s door switch signals are not received. : Refer to inspection procedure P-5 "The driver's door switch signal is not received <RH drive vehicles>P.54B-335 ."

The passenger’s door switch signals are not received. : Refer to inspection procedure P-12 "All the door switch signals are not received P.54B-358."

Step 2. Connector check: E-07 sunroof motor assembly connector

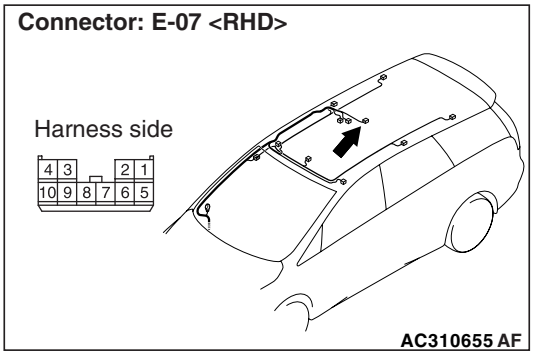

Q: Is the check result normal?

YES : Go to Step 3.

NO : Repair the connector.

Step 3. Voltage measurement at the E-07 sunroof motor assembly connector.

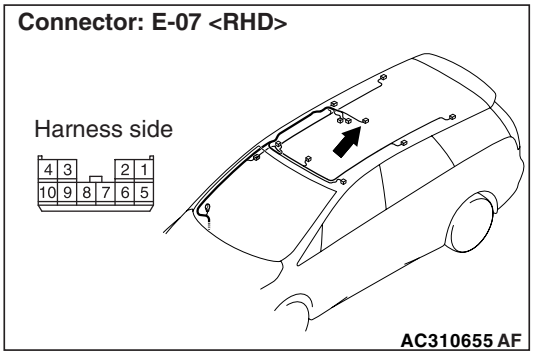

(1) Disconnect the sunroof motor assembly connector, and measure at the harness side.

(2) Ignition switch: ON

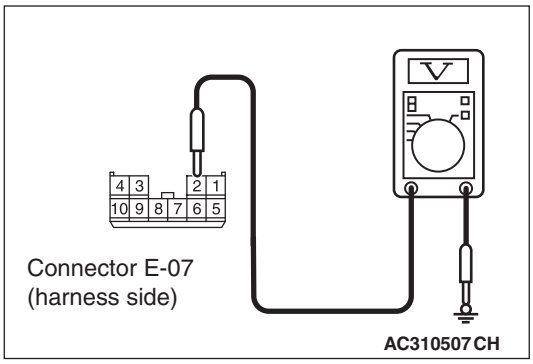

(3) Check the voltage between E-07 sunroof motor assembly connector terminal No.2 and body earth.

OK: Battery positive voltage

Q: Is the check result normal?

YES : Go to Step 5.

NO : Go to Step 4.

Step 4. Check the wiring harness between E-07 sunroof motor assembly connector terminal No.2 and the ignition switch (IG2).

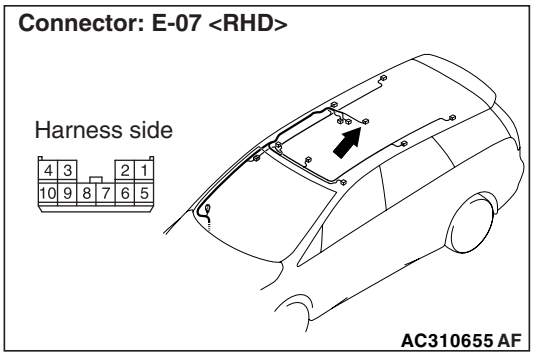

NOTE:

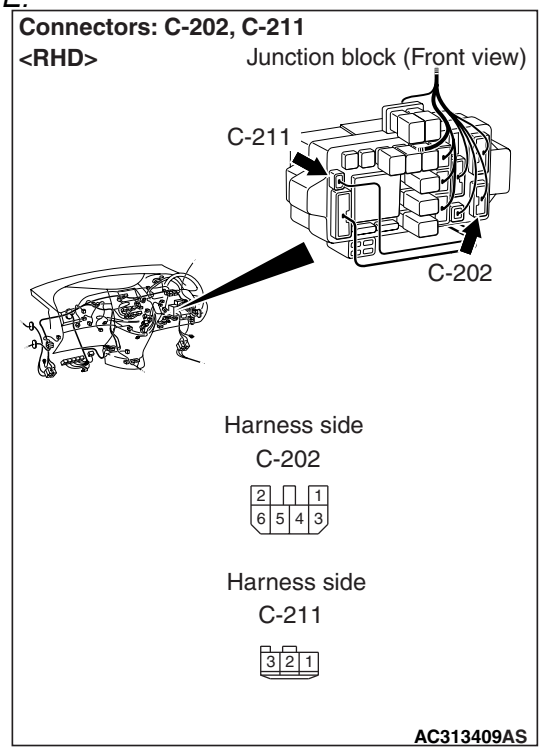

Prior to the wiring harness inspection, check junction block connectors C-202, C-211, and repair if necessary.

- Check the power supply line for open circuit.

Q: Is the check result normal?

YES : The trouble can be an intermittent malfunction (Refer to GROUP 00 – How to Cope with Intermittent Malfunction P.00-5).

NO : Repair the wiring harness.

Step 5. Connector check: C-221 ETACS-ECU connector

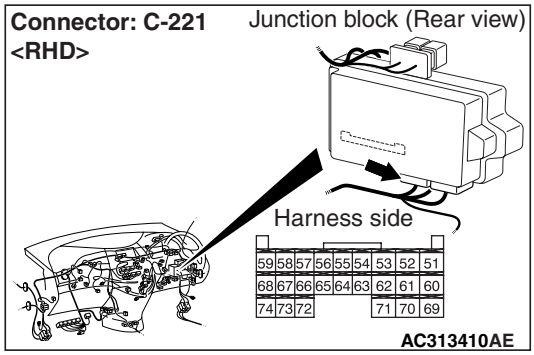

Q: Is the check result normal?

YES : Go to Step 6.

NO : Repair the connector.

Step 6. Check the wiring harness between E-07 sunroof motor assembly connector terminal No.10 and C-221 ETACS-ECU connector terminal No.59.

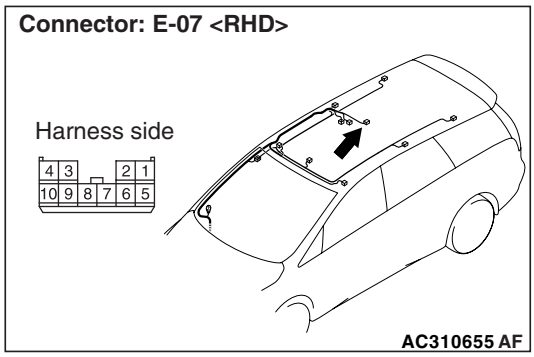

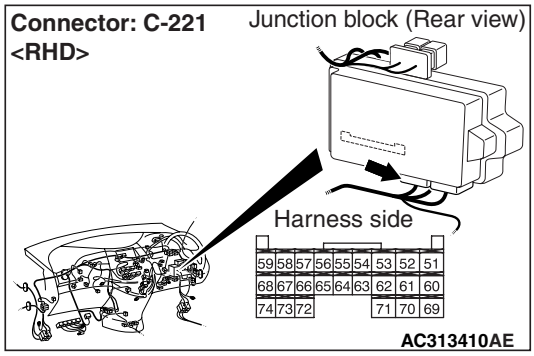

Main Index
Group TOC

NOTE:

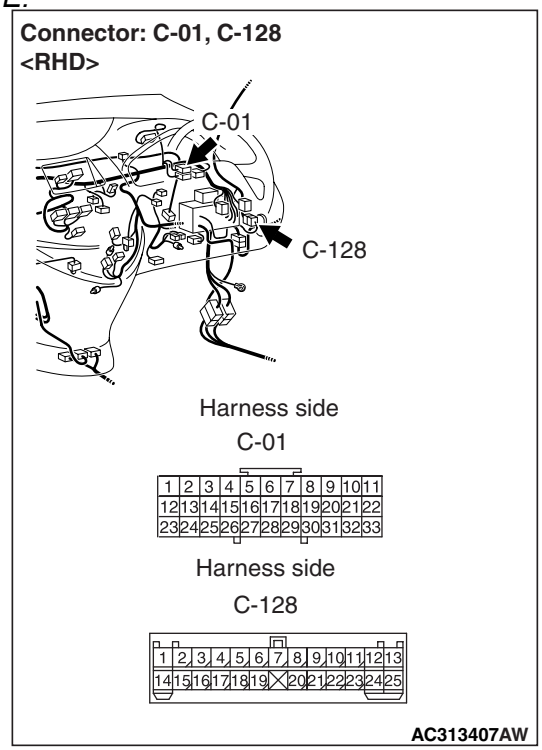

Prior to the wiring harness inspection, check intermediate connector C-128 and joint connector C-01, and repair if necessary.

- Check the communication lines for open circuit.

Q: Is the check result normal?

YES : Go to Step 7.

NO : Repair the wiring harness.

Step 7. Retest the system.

After the sunroof motor assembly is replaced, check that the sunroof timer function works normally.

(1) Replace the sunroof motor assembly.

(2) Check that the sunroof timer function works normally.

Q: Is the check result normal?

YES : The trouble can be an intermittent malfunction (Refer to GROUP 00 – How to Cope with Intermittent Malfunction P.00-5).

NO : Replace the ETACS-ECU.

Main Index
Group TOC

INSPECTION PROCEDURE F-3: Sunroof timer function does not work normally. <Except vehicles for Australia and New Zealand>

⚠ CAUTION

Whenever the ECU is replaced, ensure that the input and output signal circuits are normal.

Sunroof Timer Function

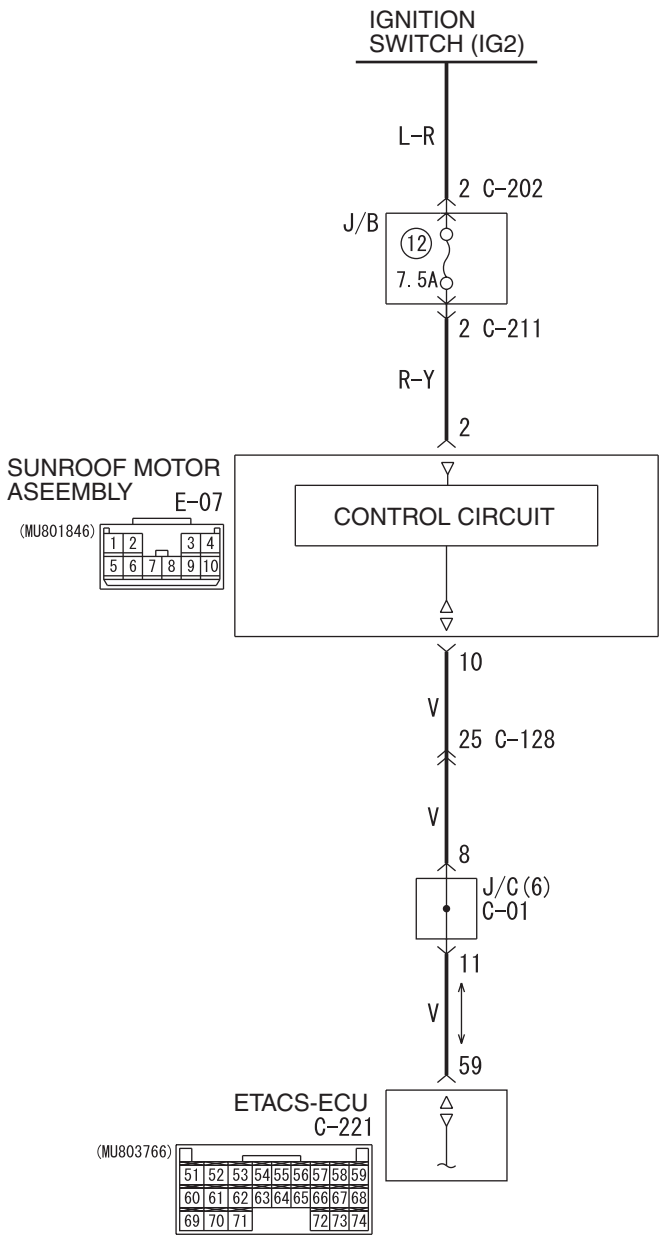

Wire colour code
B : Black LG : Light green G : Green L : Blue W : White Y : Yellow SB : Sky blue
BR : Brown O : Orange GR : Gray R : Red P : Pink V : Violet

W6X54X093A

Main Index
Group TOC

COMMENTS ON TROUBLE SYMPTOM

If the sunroof timer function does not work, the input circuit from the ignition switch (IG1) or the driver's door switch, the communication lines between the ETACS-ECU and the sunroof motor assembly (sunroof-ECU), the sunroof motor assembly (sunroof-ECU) or the ETACS-ECU may be defective.

POSSIBLE CAUSES

- Malfunction of the driver’s door switch
- Malfunction of ETACS-ECU
- Malfunction of the sunroof motor assembly (sunroof-ECU)
- Damaged harness wires and connectors

DIAGNOSTIC PROCEDURE

Step 1. Pulse check

Check the input signals below, which are related to the sunroof timer function.

System switch	Check conditions
Ignition switch (IG1)	When turned from ACC to ON
Driver's door switch	When the driver's door is opened

OK: The M.U.T.-III sounds or the voltmeter needle fluctuates.

Q: Are the check result normal?

All the signals are received normally. : Go to Step 2.

The ignition switch (IG1) signal is not received. : Refer to inspection procedure P-2 "The ignition switch (IG1) signal is not received P.54B-322."

The driver’s door switch signals are not received. : Refer to inspection procedure P-5 "The driver's door switch signal is not received P.54B-333 <L.H. drive vehicles> or P.54B-335 <R.H. drive vehicles>."

Step 2. Connector check: E-07 sunroof motor assembly connector

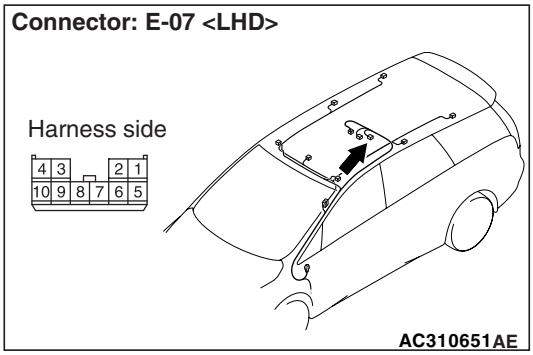

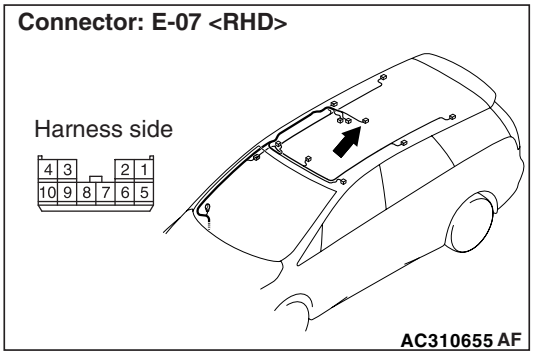

Q: Is the check result normal?

YES : Go to Step 3.

NO : Repair the connector.

Step 3. Voltage measurement at the E-07 sunroof motor assembly connector.

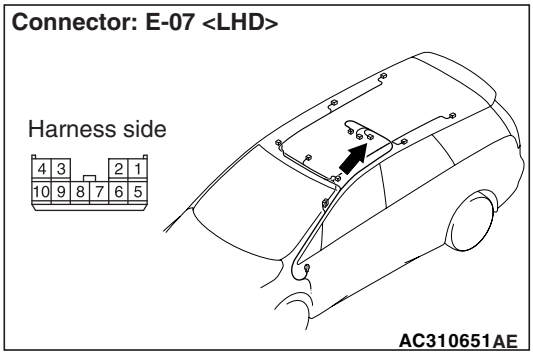

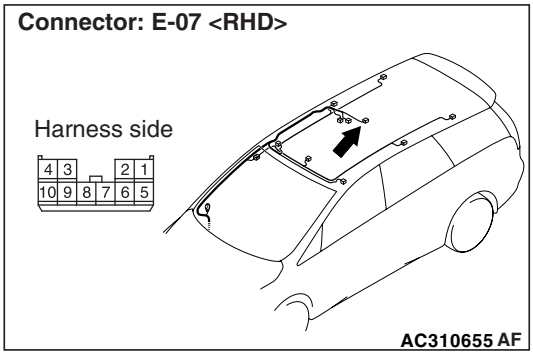

(1) Disconnect the sunroof motor assembly connector, and measure at the harness side.

Main Index
Group TOC

(2) Ignition switch: ON

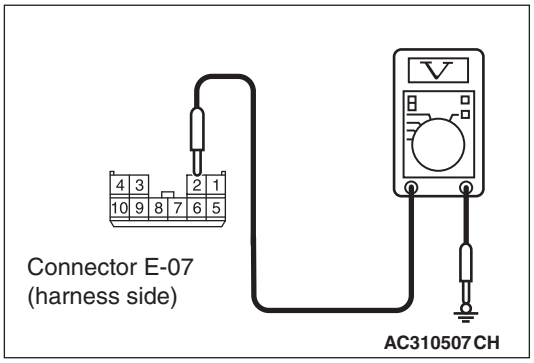

(3) Check the voltage between E-07 sunroof motor assembly connector terminal No.2 and body earth.

OK: Battery positive voltage

Q: Is the check result normal?
YES : Go to Step 5.
NO : Go to Step 4.

Step 4. Check the wiring harness between E-07 sunroof motor assembly connector terminal No.2 and the ignition switch (IG2).

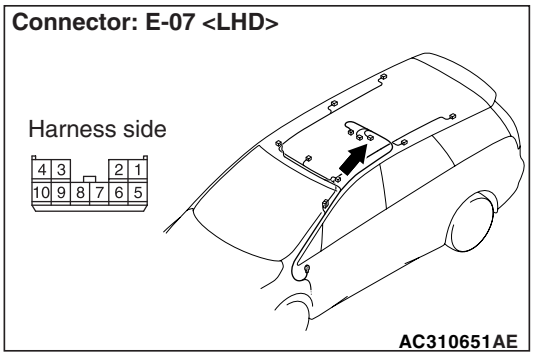

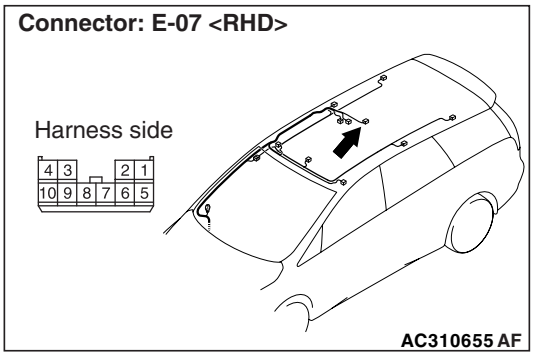

NOTE:

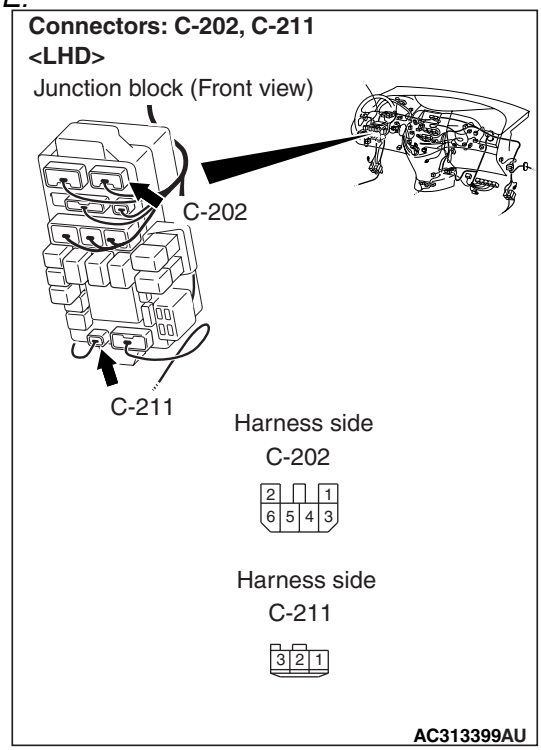

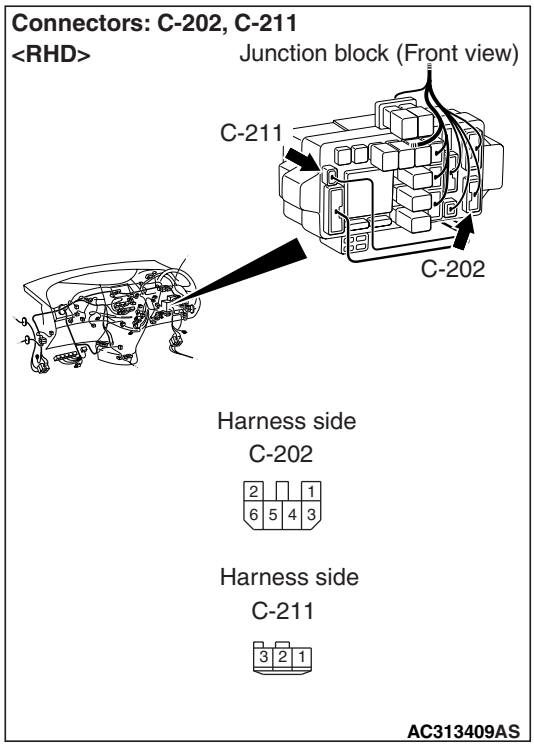

Prior to the wiring harness inspection, check junction block connectors C-202, C-211, and repair if necessary.

- Check the power supply line for open circuit.

Q: Is the check result normal?
YES : The trouble can be an intermittent malfunction (Refer to GROUP 00 – How to Cope with Intermittent Malfunction P.00-5).
NO : Repair the wiring harness.

Main Index
Group TOC

Step 5. Connector check: C-221 ETACS-ECU connector

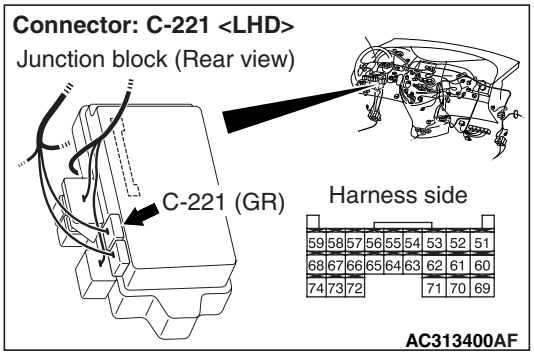

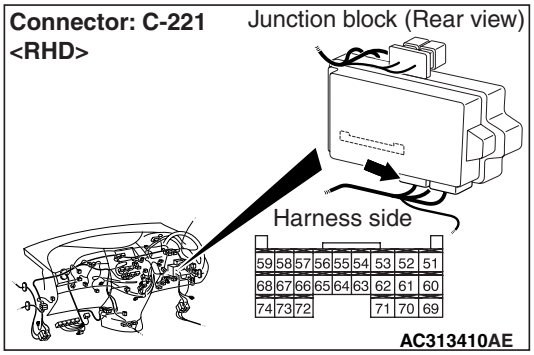

Q: Is the check result normal?

YES : Go to Step 6.

NO : Repair the connector.

Step 6. Check the wiring harness between E-07 sunroof motor assembly connector terminal No.10 and C-221 ETACS-ECU connector terminal No.59.

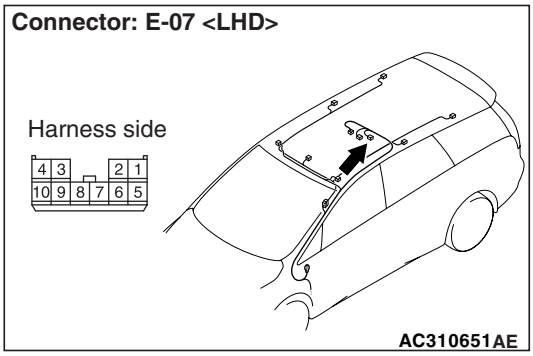

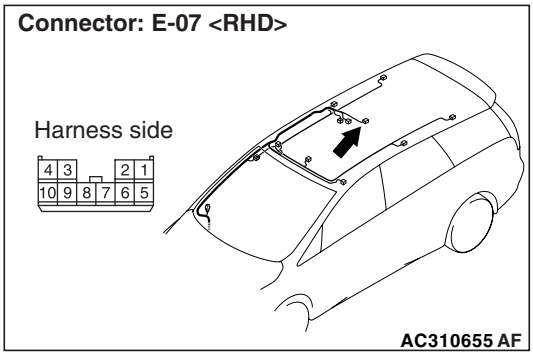

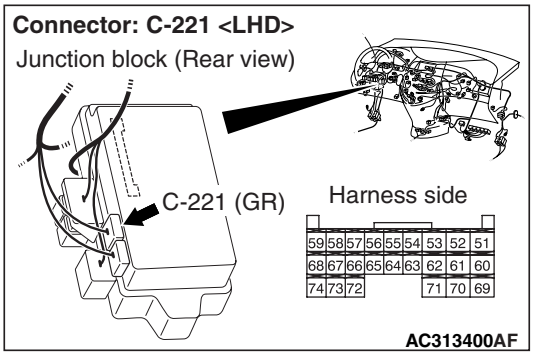

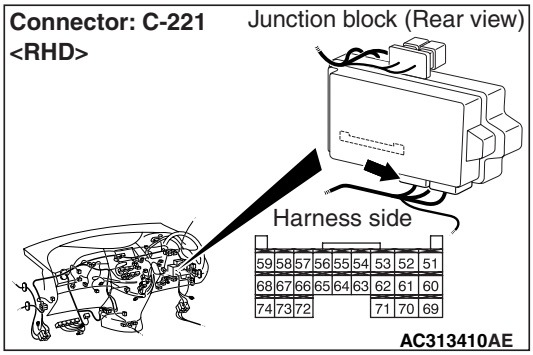

Main Index
Group TOC

NOTE:

Connector: C-01, C-128
<LHD>

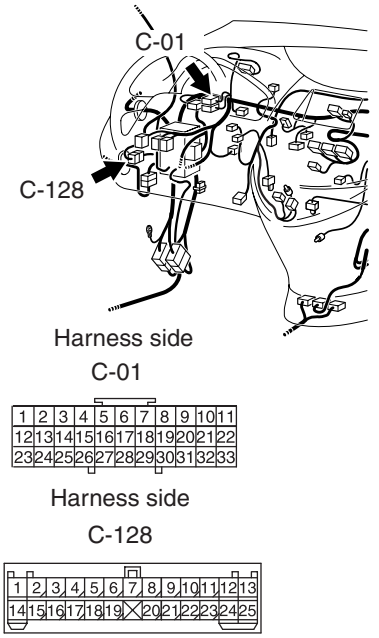

AC313393BA

Connector: C-01, C-128
<RHD>

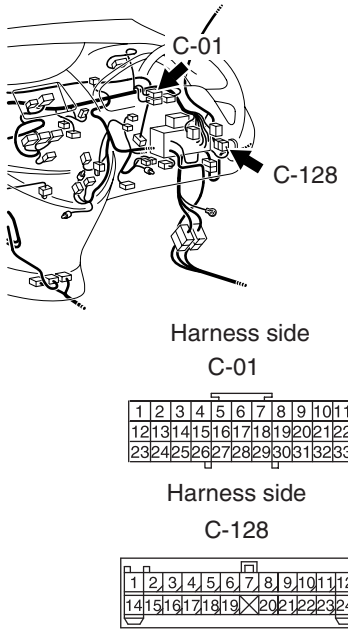

AC313407AW

Prior to the wiring harness inspection, check intermediate connector C-128 and joint connector C-01, and repair if necessary.

- Check the communication lines for open circuit.

Q: Is the check result normal?

YES : Go to Step 7.
NO : Repair the wiring harness.

Step 7. Retest the system.

After the sunroof motor assembly is replaced, check that the sunroof timer function works normally.

(1) Replace the sunroof motor assembly.
(2) Check that the sunroof timer function works normally.

Q: Is the check result normal?

YES : The trouble can be an intermittent malfunction (Refer to GROUP 00 – How to Cope with Intermittent Malfunction P.00-5).
NO : Replace the ETACS-ECU.

Main Index
Group TOC

INSPECTION PROCEDURE F-4: The sunroof inhibition function does not work normally (The sunroof operation lock warning buzzer does not sound).

⚠ CAUTION
Whenever the ECU is replaced, ensure that the input and output signal circuits are normal.

Sunroof Lock Function

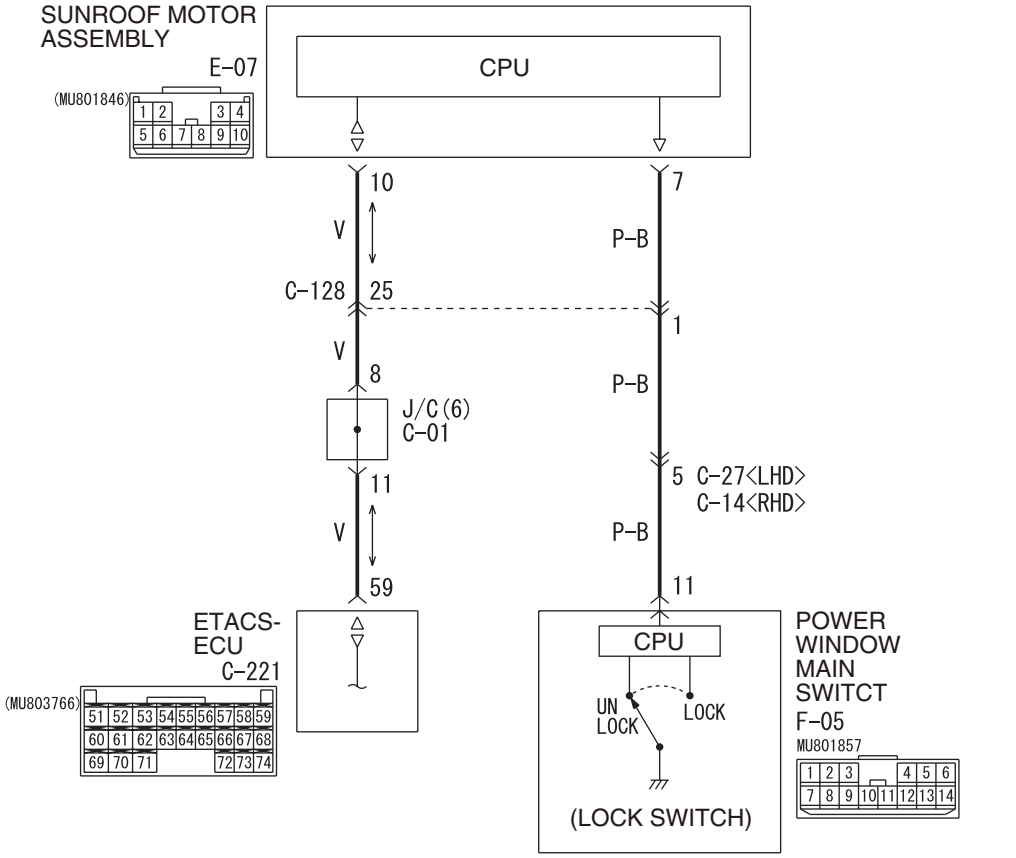

Wire colour code
B : Black LG : Light green G : Green L : Blue W : White Y : Yellow SB : Sky blue
BR : Brown O : Orange GR : Grey R : Red P : Pink V : Violet PU : Purple

W4X54X187A

COMMENTS ON TROUBLE SYMPTOM

If the sunroof inhibition function does not work normally, the sunroof motor assembly, the power window main switch or the ETACS-ECU may be defective.

PROBABLE CAUSES

- Malfunction of the power window main switch
- Malfunction of the sunroof motor assembly
- Malfunction of the ETACS-ECU
- Damaged harness wires and connectors

Main Index
Group TOC

DIAGNOSIS PROCEDURE

Step 1. Which does not operate normally, the sunroof inhibition or the sunroof operation lock buzzer?

Q: Which does not operate normally, the sunroof inhibition or the sunroof operation lock buzzer?
The sunroof inhibition does not work normally. : Go to Step 2.
The sunroof operation lock buzzer does not work normally. : Go to Step 4.
Neither operates normally. : Go to Step 7.

Step 2. M.U.T.-III diagnosis code

Check that the ETACS-ECU sets a diagnosis code.

Q: Is the diagnosis code set?
YES : Go to Step 3.
NO : Refer to diagnosis code chart P.54B-26.

Step 3. Check the operation of the sunroof.

Check that the sunroof works normally by using the sunroof switch.

Q: Is the check result normal?
YES : The trouble can be an intermittent malfunction (Refer to GROUP 00 – How to Cope with Intermittent Malfunction P.00-5).
NO : Inspection procedure F-1 "The sunroof does not work at all P.54B-154."

Step 4. Check the power supply circuit.

When the ignition switch is turned to the LOCK (OFF) position, check if the hazard warning lamps illuminate.

Q: Is the check result normal?
YES : Go to Step 5.
NO : Refer to inspection procedure A-2 "Check the ETACS-ECU battery power supply circuit P.54B-71."

Step 5. Connector check: E-07 sunroof motor assembly connector and C-221 ETACS-ECU connector

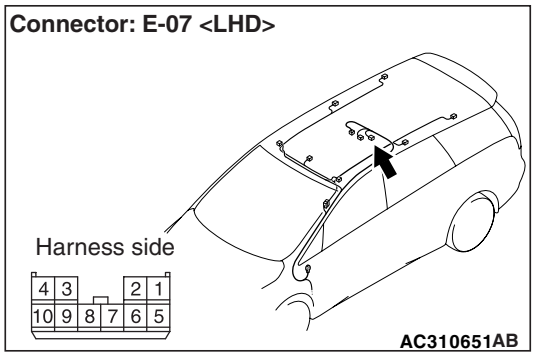

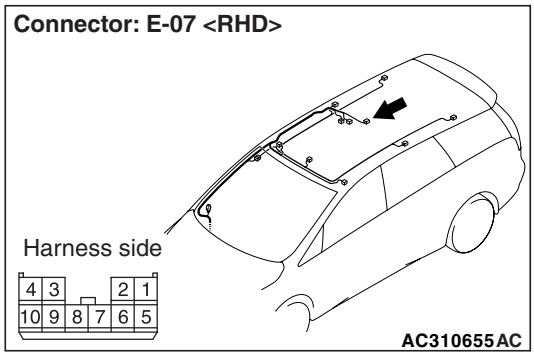

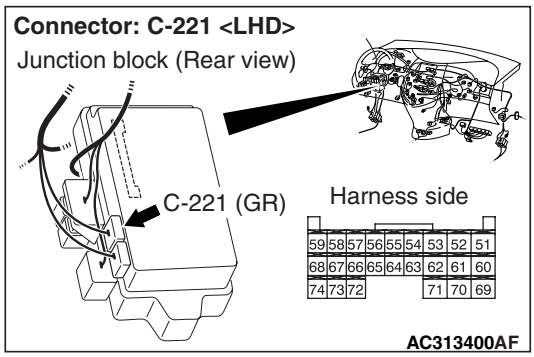

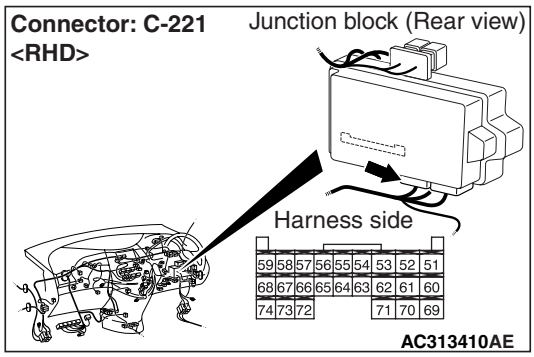

Q: Is the check result normal?
YES : Go to Step 6.
NO : Repair the connector.

Main Index
Group TOC

Step 6. Check the wiring harness between E-07 sunroof motor assembly connector terminal No.10 and C-221 ETACS-ECU connector terminal No.59.

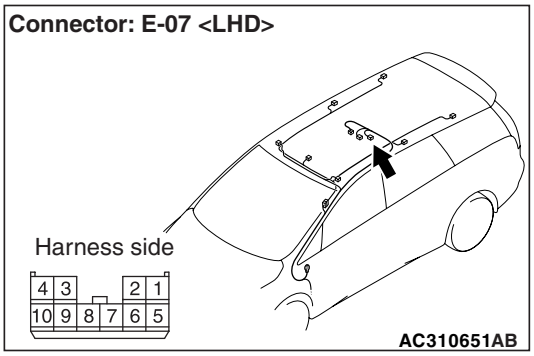

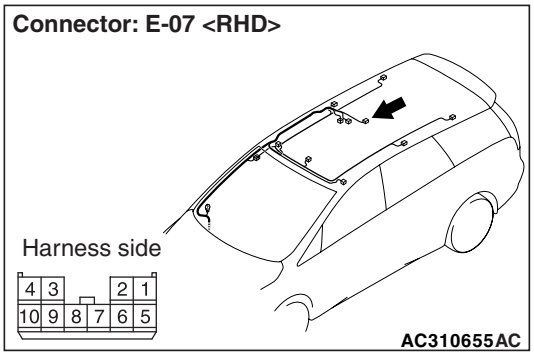

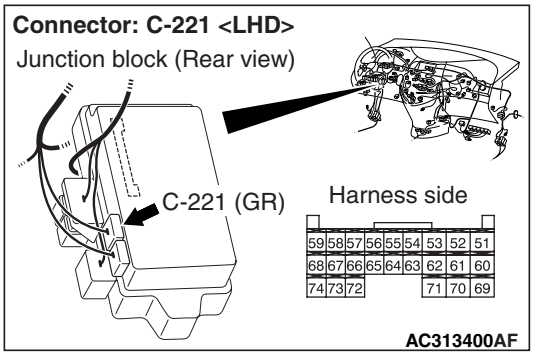

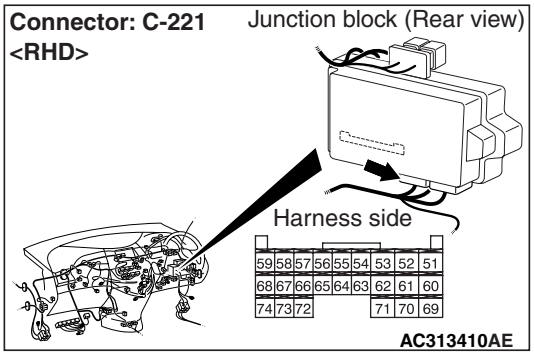

NOTE:

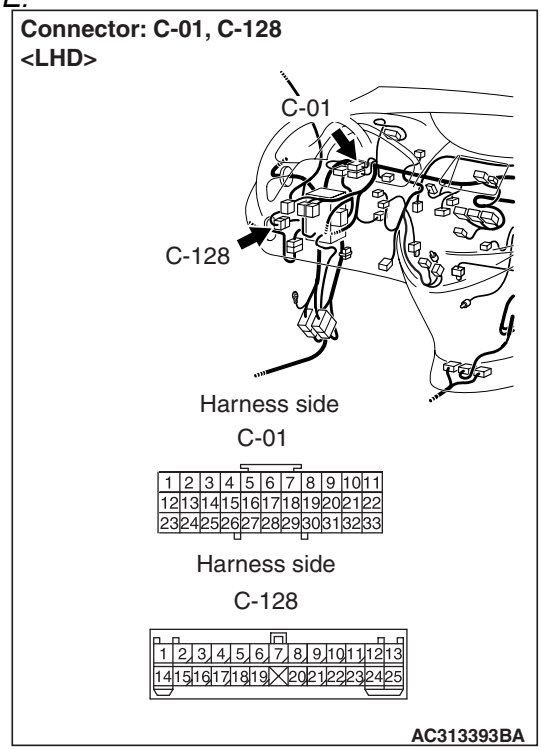

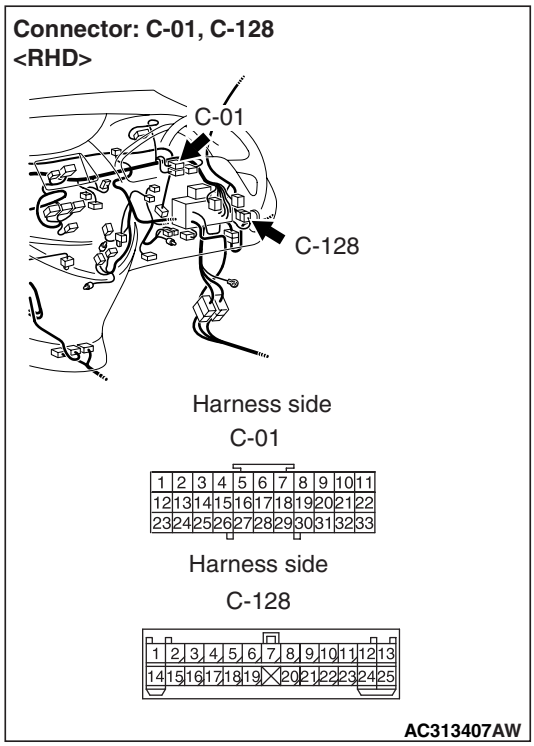

Prior to the wiring harness inspection, check intermediate connector C-128 and joint connector C-01, and repair if necessary.

- Check the communication lines for open circuit.

Q: Is the check result normal?

YES : Replace the ETACS-ECU.

NO : Repair the wiring harness.

Main Index
Group TOC

Step 7. Check the power supply circuit.
When the ignition switch is turned to the LOCK (OFF) position, check if the hazard warning lamps illuminate.

Q: Is the check result normal?
YES : Go to Step 8.
NO : Refer to inspection procedure A-2 "Check the ETACS-ECU battery power supply circuit P.54B-71."

Step 8. Check the operation of the sunroof.
Check that the sunroof works normally by using the sunroof switch.

Q: Is the check result normal?
YES : Go to Step 9.
NO : Inspection procedure F-1 "The sunroof does not work at allP.54B-154."

Step 9. Confirm the operation of the power windows.
Check that each of the power windows (excluding the driver's door) works normally by using the power window main switch.

Q: Is the check result normal?
YES : Go to Step 10.
NO : Inspection procedure D-4 "Passenger's and/or rear power window(s) do not work by means of the power window main switch P.54B-142."

Step 10. Confirm the operation of the power windows.
Turn on the power window lock switch. Check that neither of the power windows (excluding the driver's door) works when the relevant power window sub switch is operated.

Q: Is the check result normal?
YES : Replace to the power window main switch.
NO : Go to Step 11.

Step 11. Connector check: E-07 sunroof motor assembly connector and F-05 power window main switch connector

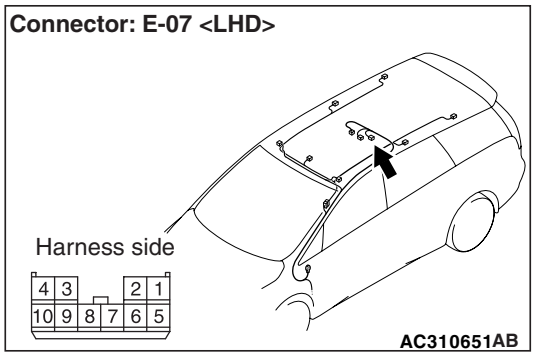

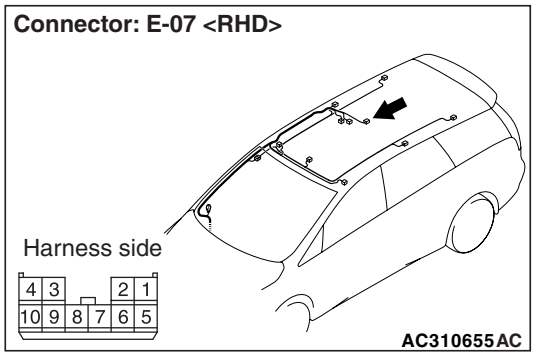

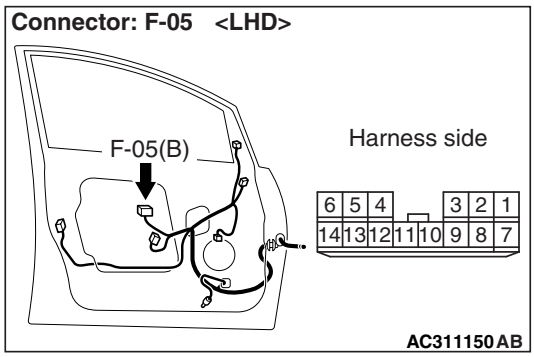

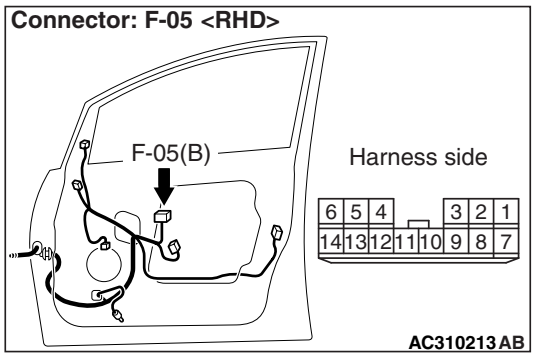

Q: Is the check result normal?
YES : Go to Step 12.
NO : Repair the connector.

Main Index
Group TOC

Step 12. Check the wiring harness between E-07 sunroof motor assembly connector terminal No.7 and F-05 power window main switch connector terminal No.11.

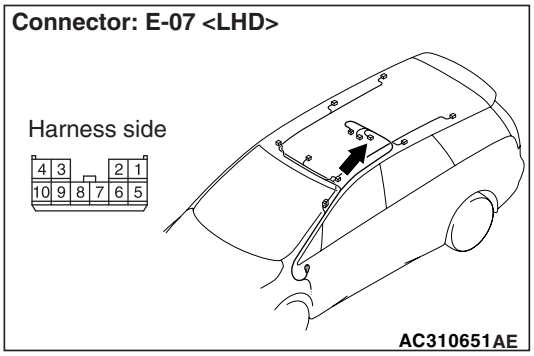

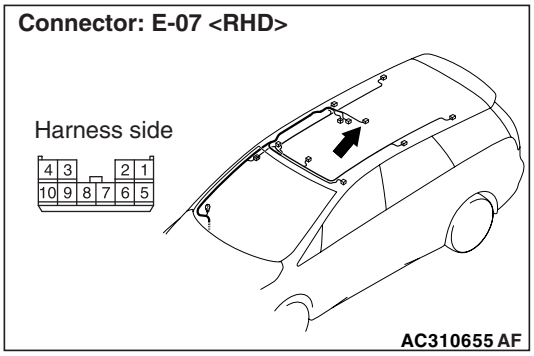

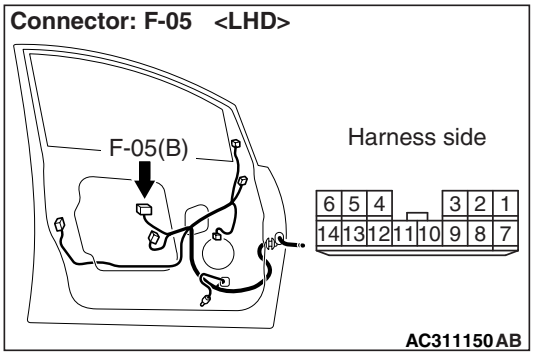

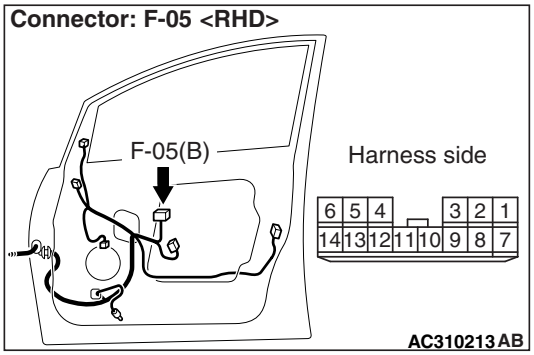

NOTE:

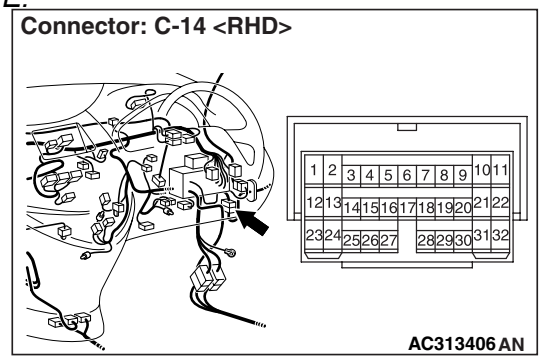

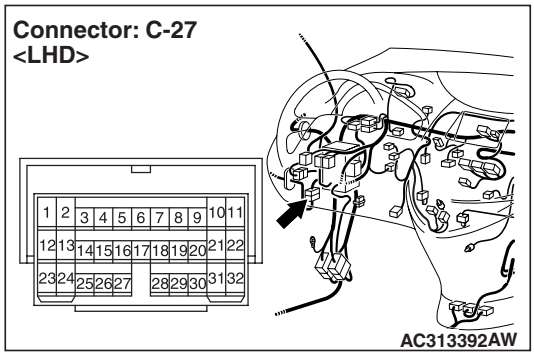

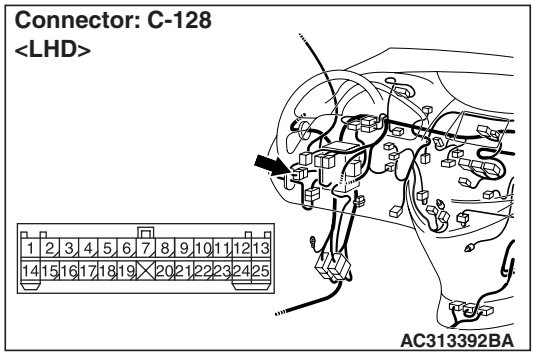

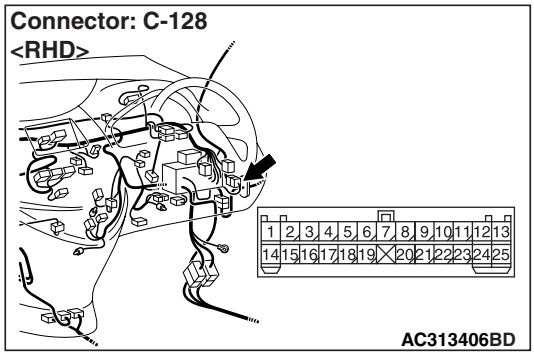

Prior to the wiring harness inspection, check intermediate connector C-128, C-27 <L.H. drive vehicles>, C-14 <R.H. drive vehicles> and repair if necessary.

- Check the communication lines for open circuit.

Q: Is the check result normal?

YES : The trouble can be an intermittent malfunction (Refer to GROUP 00, How to Cope with Intermittent Malfunction P.00-5).

NO : Repair the harness wire, and then go to Step 13.

Main Index
Group TOC

Step 13. Check the diagnosis code.
When the ignition switch is turned to the LOCK (OFF) position, check that the ETACS-ECU does not set the diagnosis code.

Q: Is the diagnosis code set?
YES : . Refer to diagnosis code chart P.54B-26.
NO : . The trouble can be an intermittent malfunction (Refer to GROUP 00 – How to Cope with Intermittent Malfunction P.00-5).

INSPECTION PROCEDURE F-5: Sunroof anti-trap function does not work normally.

⚠ CAUTION
Whenever the ECU is replaced, ensure that the input and output signal circuits are normal.

COMMENTS ON TROUBLE SYMPTOM

If the sunroof anti-trap function does not work, the sunroof motor assembly (sunroof-ECU) may be defective.

POSSIBLE CAUSES

- Malfunction of the sunroof motor assembly (sunroof-ECU)

DIAGNOSTIC PROCEDURE

Retest the system.
Check that the sunroof anti-trap function work normally.

Q: Is the check result normal?
YES : The trouble can be an intermittent malfunction (Refer to GROUP 00 – How to Cope with Intermittent Malfunction P.00-5).
NO : Replace the sunroof motor assembly.

Main Index
Group TOC

WINDSHIELD WIPER AND WASHER

INSPECTION PROCEDURE G-1: The windshield wipers do not work at all.

⚠ CAUTION
Whenever the ECU is replaced, ensure that the input and output signal circuits are normal.

Windshield Wiper Power Supply Circuit

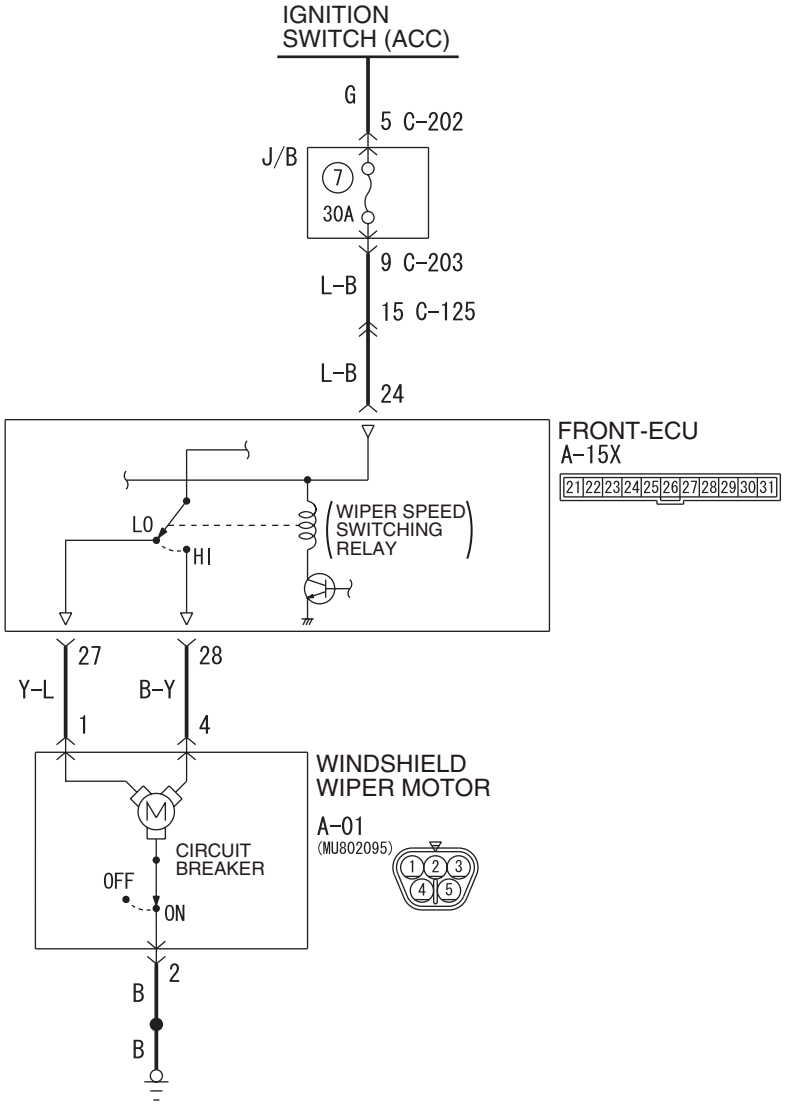

Wire colour code
B : Black LG : Light green G : Green L : Blue W : White Y : Yellow SB : Sky blue
BR : Brown O : Orange GR : Grey R : Red P : Pink V : Violet PU : Purple

W6X54X009A

Main Index
Group TOC

COMMENTS ON TROUBLE SYMPTOM

The windshield wiper motor, the column switch or the front-ECU may be defective.

POSSIBLE CAUSES

- Malfunction of the windshield wiper motor
- Malfunction of the column switch
- Malfunction of the front-ECU
- Damaged harness wires and connectors

DIAGNOSTIC PROCEDURE

Step 1. Check the diagnosis code.

When the ignition switch is turned to the LOCK (OFF) position, check that the ETACS-ECU does not set the diagnosis code.

Q: Is the diagnosis code set?

YES : Refer to diagnosis code chart P.54B-26.

NO : Go to Step 2.

Step 2. Pulse check.

Check the input signals below which are related to the windshield wiper.

System switch	Check condition
Ignition switch (ACC)	When turned from the LOCK (OFF) position to the ACC position.
Windshield mist wiper switch	When the switch is turned from off to on.

OK: The M.U.T.-III sounds or the voltmeter needle fluctuates.

Q: Are the check result normal?

All the signals are received normally : Go to Step 3.

The ignition switch (ACC) signal is not received. : Refer to inspection procedure P-1 "The ignition switch (ACC) signal is not received P.54B-319."

Windshield mist wiper switch signal is not received. : Refer to inspection procedure P-7 "The column switch (windshield wiper washer and rear wiper washer switch) signal is not received P.54B-339."

Step 3. Connector check: A-01 windshield wiper motor connector.

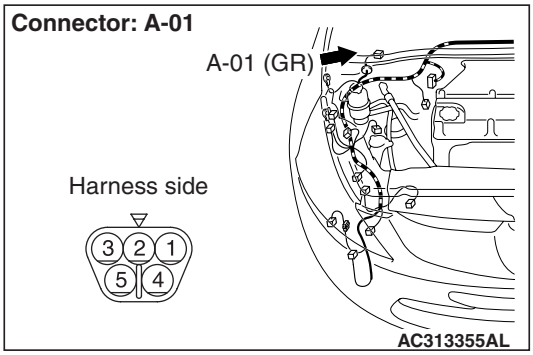

Q: Is the check result normal?

YES : Go to Step 4.

NO : Repair the connector.

Step 4. Check the windshield wiper motor assembly.

Refer to GROUP 51 – Windshield wiper P.51-20.

Q: Is the check result normal?

YES : Go to Step 5.

NO : Replace the windshield wiper motor assembly.

Step 5. Resistance measurement at the A-01 windshield wiper motor connector.

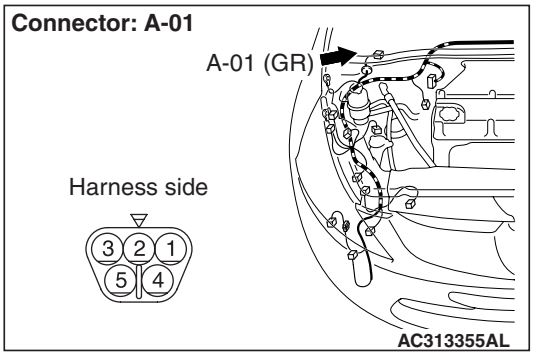

(1) Disconnect the connector, and measure at the wiring harness side.

Main Index
Group TOC

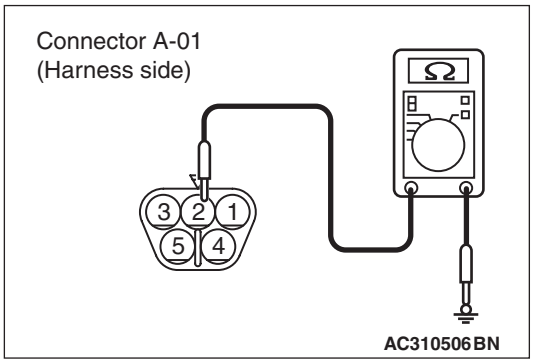

(2) Continuity between A-01 windshield wiper motor connector terminal No.2 and body earth

OK: 2 Ω or less

Q: Is the check result normal?
YES : Go to Step 7.
NO : Go to Step 6.

Step 6. Check the wiring harness between A-01 windshield wiper motor connector terminal No.2 and body earth.

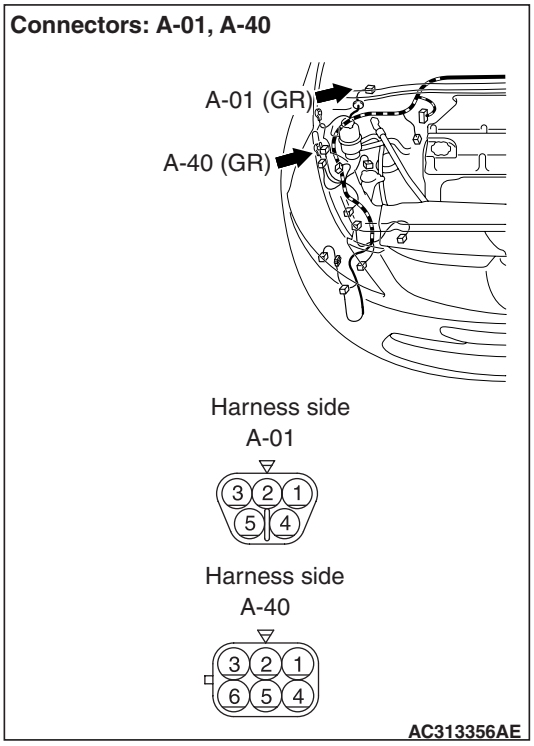

- Check the earth wires for open circuit.

Q: Is the check result normal?
YES : The trouble can be an intermittent malfunction (Refer to GROUP 00 – How to Cope with Intermittent Malfunction P.00-5).
NO : Repair the wiring harness.

Step 7. Connector check: A-15X front-ECU connector

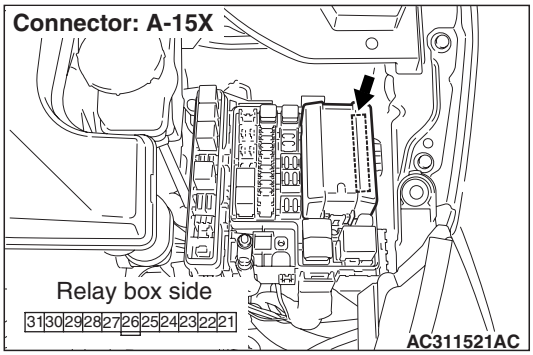

Q: Is the check result normal?
YES : Go to Step 8.
NO : Repair the connector.

Step 8. Voltage measurement at the A-15X front-ECU connector.

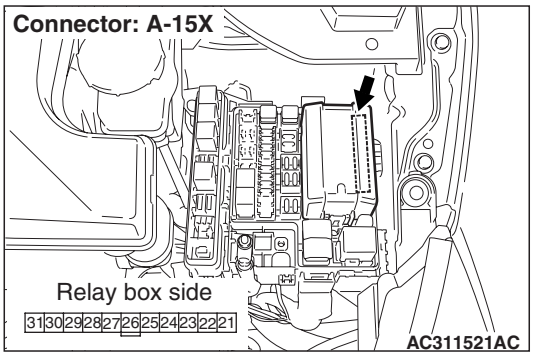

(1) Remove the front-ECU, and measure at the relay box side.
(2) Ignition switch: ACC

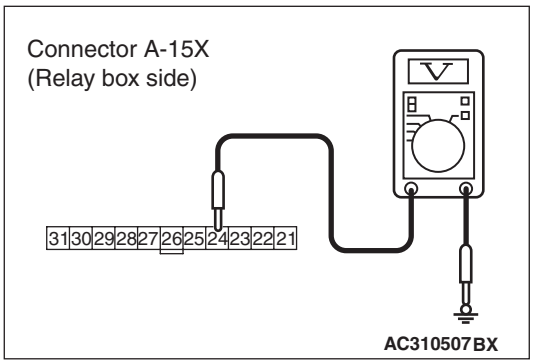

(3) Check the voltage between the A-15X front-ECU connector terminal No.24 and body earth.

OK: System voltage

Q: Is the check result normal?
YES : Go to Step 10.
NO : Go to Step 9.

Main Index
Group TOC

Step 9. Check the wiring harness between A-15X front-ECU connector terminal No.24 and the ignition switch (ACC).

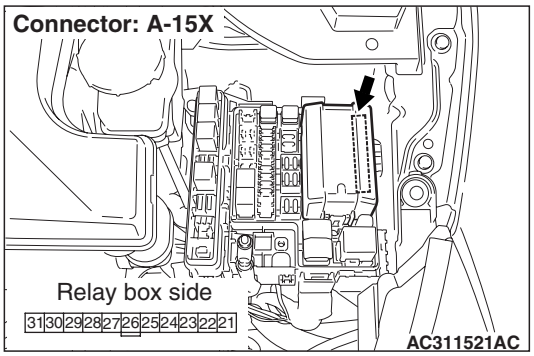

NOTE:

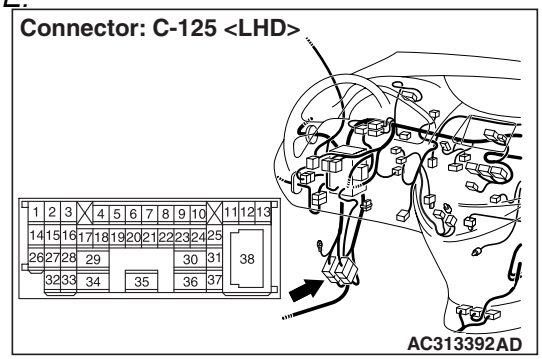

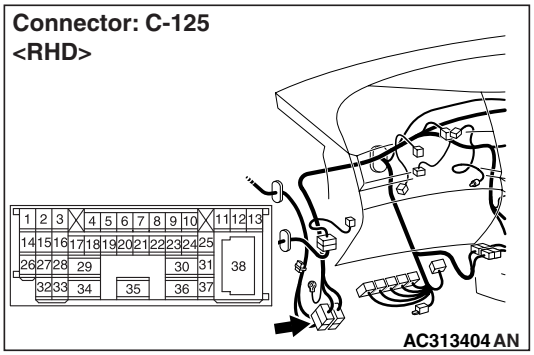

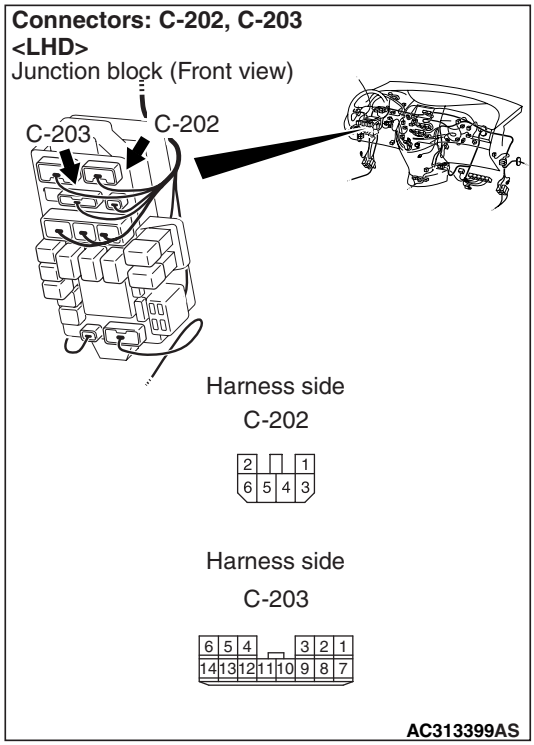

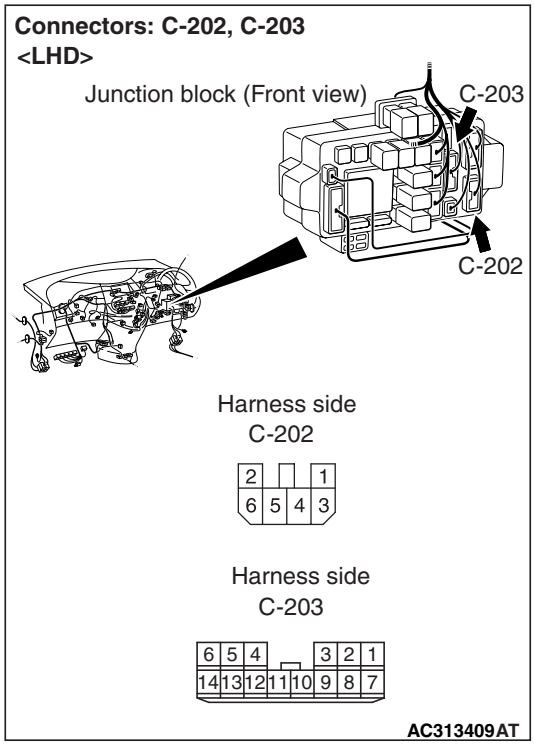

Prior to the wiring harness inspection, check the junction block connectors C-202, C-203 and intermediate connector C-125 and repair if necessary.

- Check the power supply line for open circuit.

Q: Is the check result normal?

YES : The trouble can be an intermittent malfunction (Refer to GROUP 00 – How to Cope with Intermittent Malfunction P.00-5).

NO : Repair the wiring harness.

Main Index
Group TOC

Step 10. Connector check: C-301 column switch connector

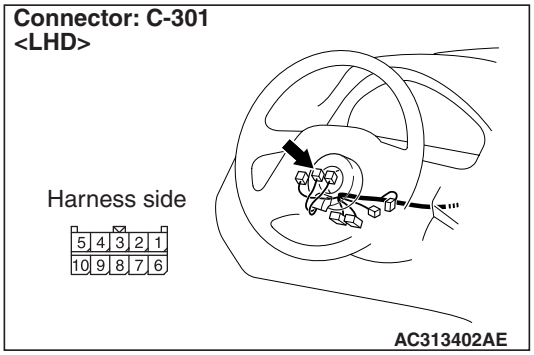

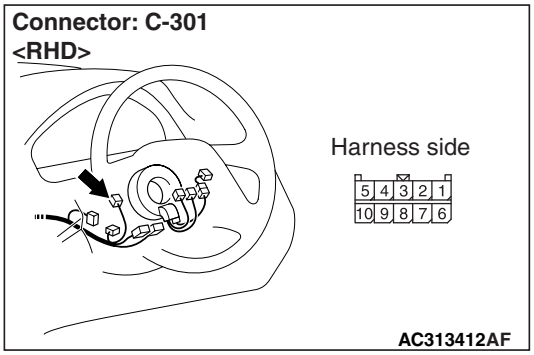

Q: Is the check result normal?
YES : Go to Step 11.
NO : Repair the connector.

Step 11. Check the wiring harness between C-301 column switch connector terminal No.8 and A-15X front-ECU connector terminal No.26.

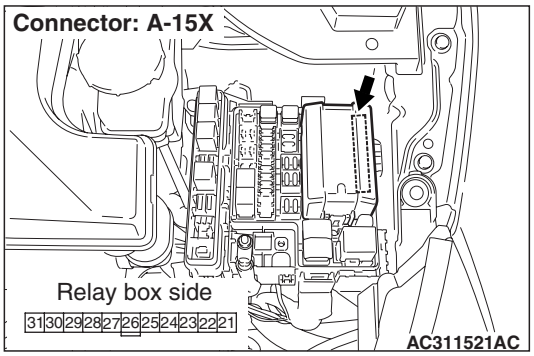

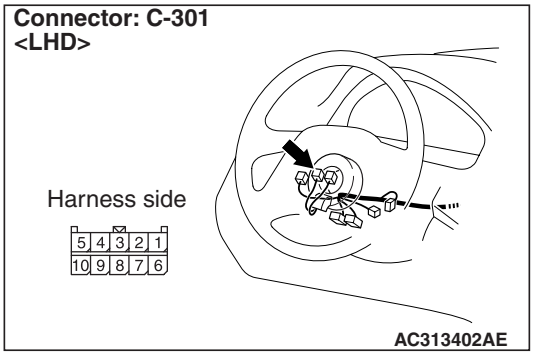

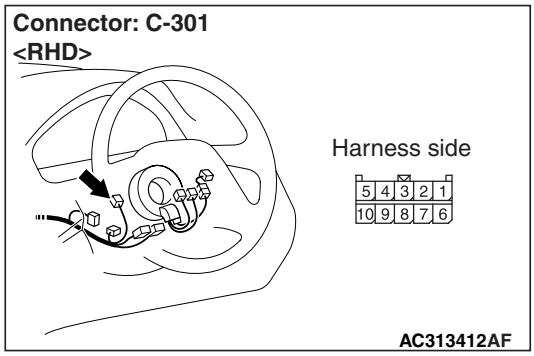

NOTE:

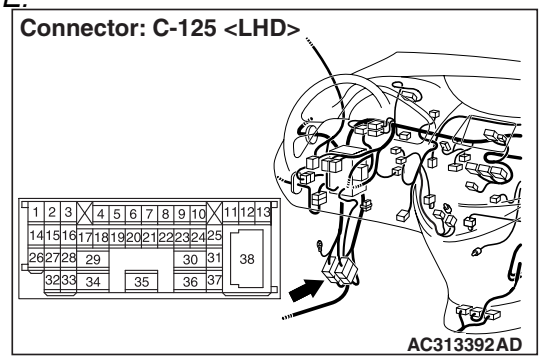

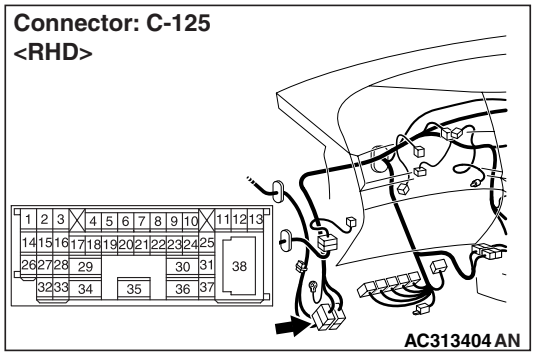

Prior to the wiring harness inspection, check the intermediate connector C-125 and repair if necessary.

- Check the wiper backup circuit.

Q: Is the check result normal?
YES : Go to Step 12.
NO : Repair the wiring harness.

Step 12. Retest the system.

The windshield wiper should now work normally at all.

Q: Is the check result normal?
YES : The trouble can be an intermittent malfunction (Refer to GROUP 00 – How to Cope with Intermittent Malfunction P.00-5).
NO : Replace the front-ECU.

Main Index
Group TOC

INSPECTION PROCEDURE G-2: The windshield wipers does not work when the wiper switch is at "INT", "WASHER" or "MIST" position. However, the wipers work at low speed when the switch is at "LO" and "HI" position.

⚠ CAUTION
Whenever the ECU is replaced, ensure that the input and output signal circuits are normal.

Windshield Wiper Motor Drive Circuit

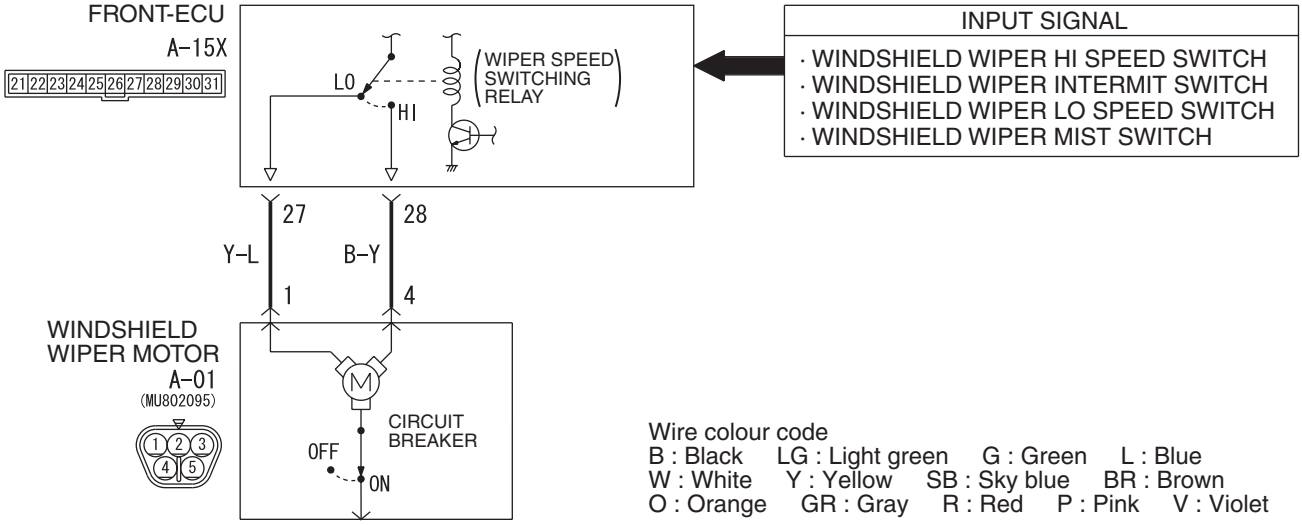

COMMENTS ON TROUBLE SYMPTOM

The system may be at fail-safe mode as the SWS communication line is defective. If the front-ECU does not receive the ignition switch (ACC) signal due to an open circuit in the SWS communication lines or other reasons when the ignition switch is at the ACC position, the system will enter the fail-safe mode.

POSSIBLE CAUSES

- Malfunction of the column switch
- Malfunction of the front-ECU
- Damaged harness wires and connectors

DIAGNOSTIC PROCEDURE

Step 1. Check the diagnosis code.
When the ignition switch is turned to the LOCK (OFF) position, check that the ETACS-ECU does not set the diagnosis code.

Q: Is the diagnosis code set?
YES : Refer to diagnosis code chart P.54B-26.
NO : Go to Step 2.

Step 2. Pulse check.
Check the input signals below which are related to the windshield wiper.

System switch	Check condition
Ignition switch (ACC)	When turned from the LOCK (OFF) position to the ACC position.
Windshield mist wiper switch	When the switch is turned from off to on.

OK: The M.U.T.-III sounds or the voltmeter needle fluctuates.

Main Index
Group TOC

Q: Are the check result normal?

All the signals are received normally : Go to Step 3.

The ignition switch (ACC) signal is not received. : Refer to inspection procedure P-1 "The ignition switch (ACC) signal is not received P.54B-319."

Windshield mist wiper switch signal is not received. : Refer to inspection procedure P-7 "The column switch (windshield wiper washer and rear wiper washer switch) signal is not received P.54B-339."

Step 3. Retest the system.

The windshield wiper should now work normally.

Q: Is the check result normal?

YES : The trouble can be an intermittent malfunction (Refer to GROUP 00 – How to Cope with Intermittent Malfunction P.00-5).

NO : Replace the front-ECU.

INSPECTION PROCEDURE G-3: The windshield wipers do not stop at the specified park position

⚠ CAUTION

Whenever the ECU is replaced, ensure that the input and output signal circuits are normal.

Windshield Wiper Automatic Stop Relay Circuit

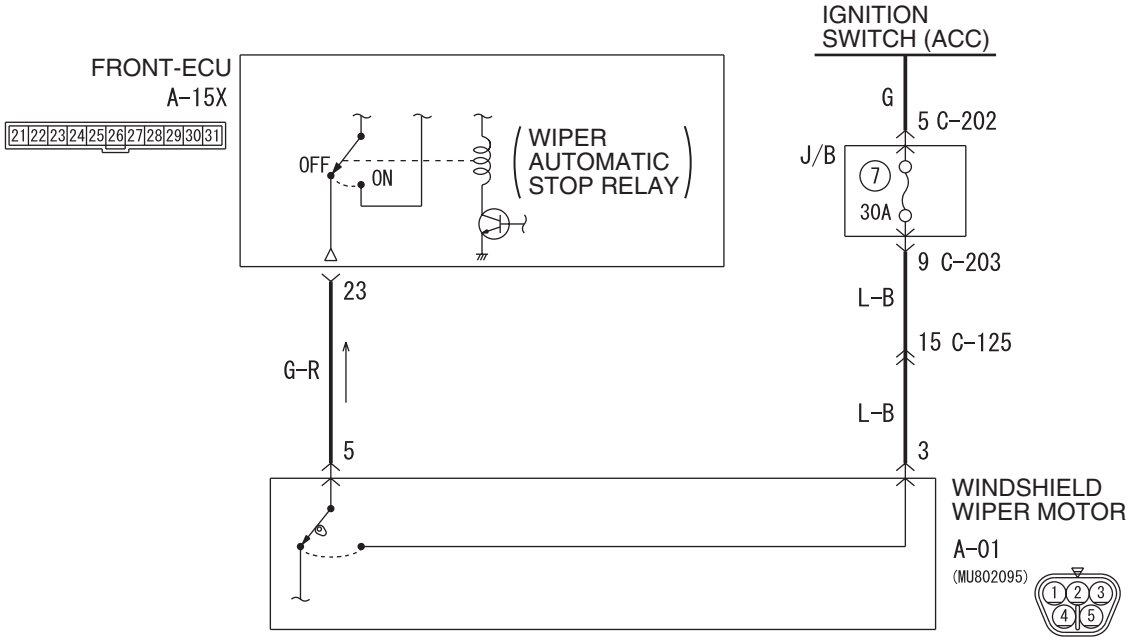

Wire colour code
B : Black LG : Light green G : Green L : Blue W : White Y : Yellow SB : Sky blue
BR : Brown O : Orange GR : Grey R : Red P : Pink V : Violet PU : Purple

W4X54X191A

COMMENTS ON TROUBLE SYMPTOM

The windshield wiper motor or the front-ECU may be defective.

POSSIBLE CAUSES

- Malfunction of the windshield wiper motor
- Malfunction of the front-ECU
- Damaged harness wires and connectors

Main Index
Group TOC

DIAGNOSTIC PROCEDURE

Step 1. Connector check: A-01 windshield wiper motor connector.

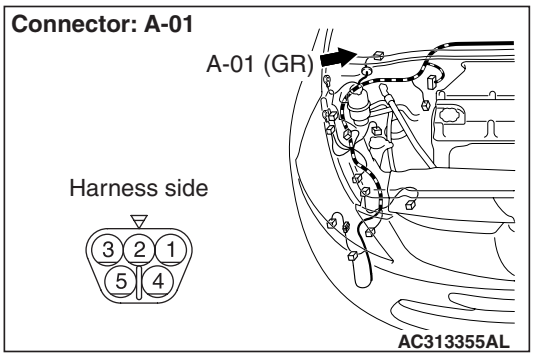

Q: Is the check result normal?
YES : Go to Step 2.
NO : Repair the connector.

Step 2. Check the windshield wiper motor assembly.
Refer to GROUP 51 – Windshield wiper P.51-20.

Q: Is the check result normal?
YES : Go to Step 3.
NO : Replace the windshield wiper motor assembly.

Step 3. Voltage measurement at the A-01 windshield wiper motor connector.

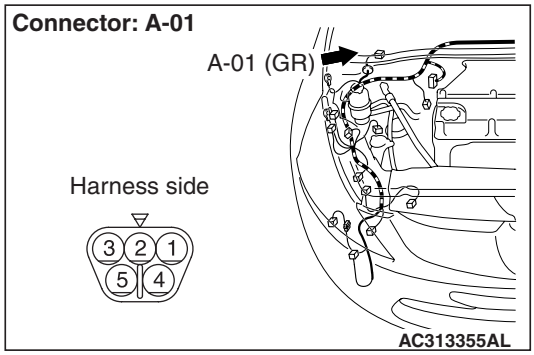

(1) Disconnect the connector, and measure at the wiring harness side.
(2) Ignition switch: ACC

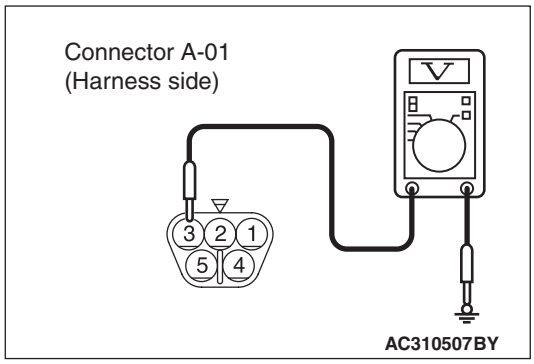

(3) Check the voltage between the A-01 windshield wiper motor connector terminal No.3 and body earth.

OK: System voltage

Q: Is the check result normal?
YES : Go to Step 5.
NO : Go to Step 4.

Main Index
Group TOC

Step 4. Check the wiring harness between A-01 windshield wiper motor connector terminal No.3 and ignition switch (ACC).

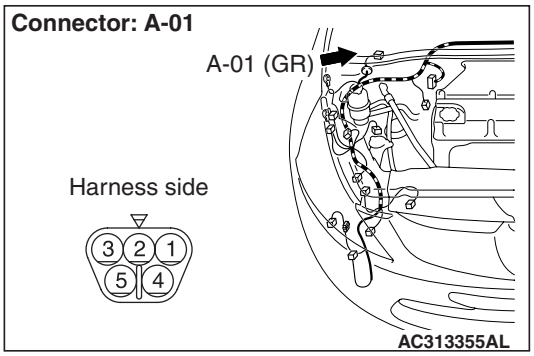

NOTE:

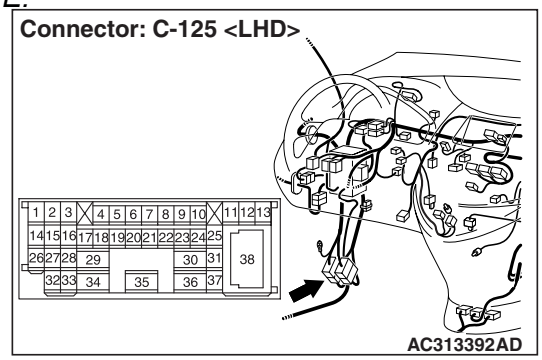

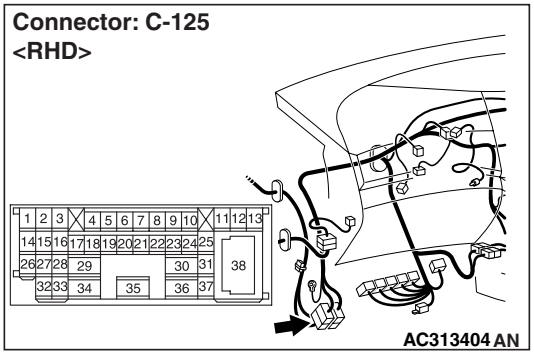

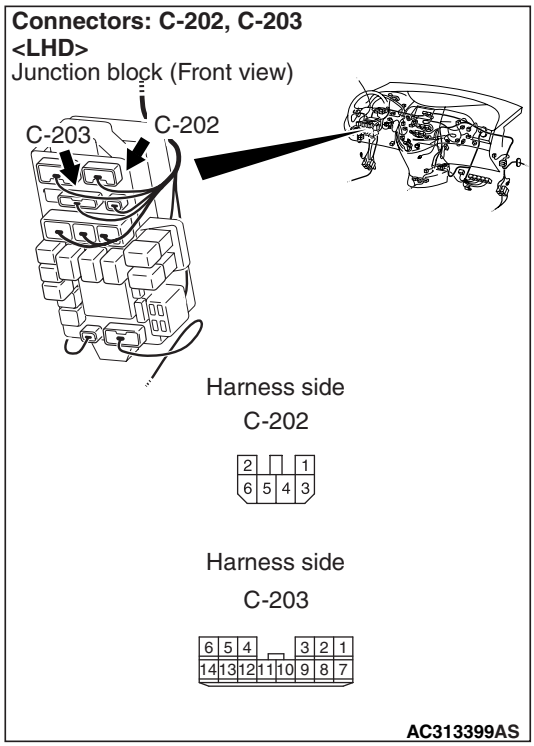

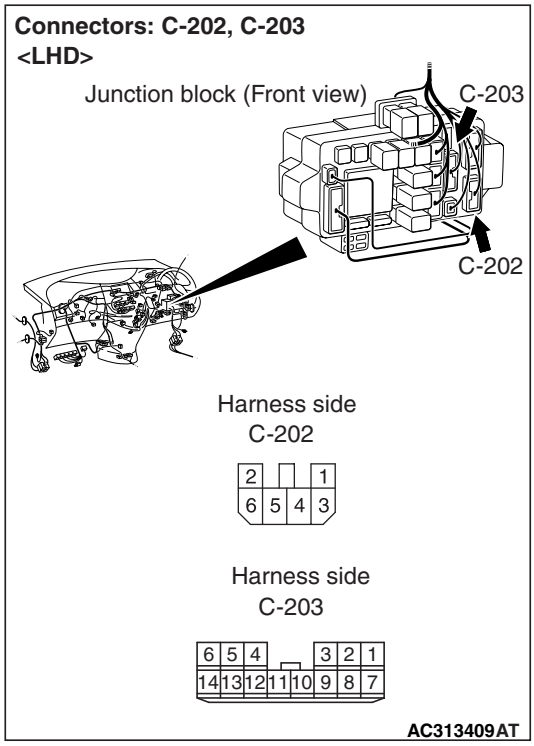

Prior to the wiring harness inspection, check the intermediate connectors C-125 and junction block connectors C-202, C-203, and repair if necessary.

- Check the power supply line to ignition switch (ACC) for open circuit.

Q: Is the check result normal?

YES : The trouble can be an intermittent malfunction (Refer to GROUP 00 – How to Cope with Intermittent Malfunction P.00-5).

NO : Repair the wiring harness.

Main Index
Group TOC

Step 5. Connector check: A-15X front-ECU connector

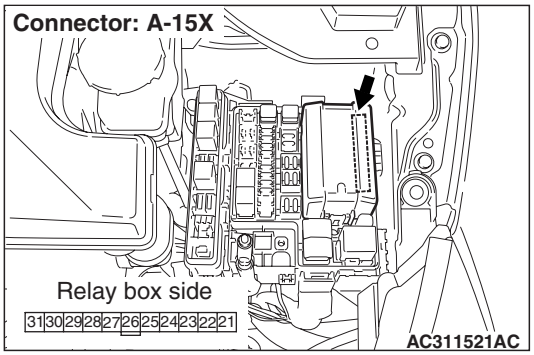

Q: Is the check result normal?
YES : Go to Step 6.
NO : Repair the connector.

Step 6. Check the wiring harness between A-01 windshield wiper motor connector terminal No.5 and A-15X front-ECU connector terminal No.23.

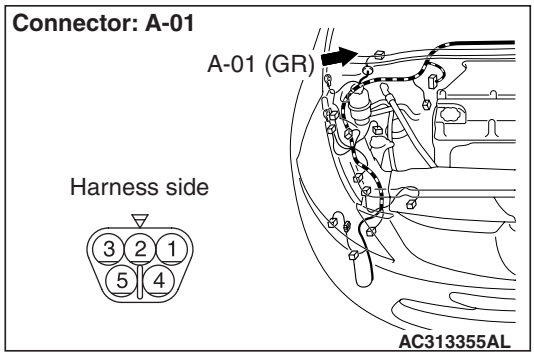

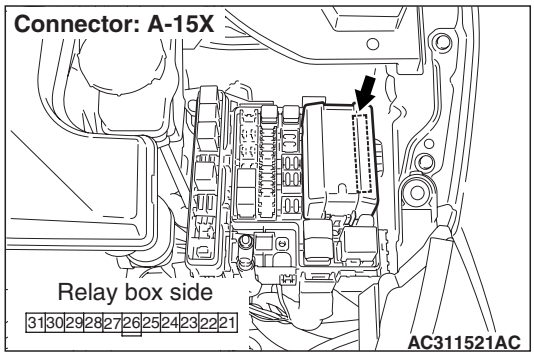

- Check the input signal lines.

Q: Is the check result normal?
YES : Go to Step 7.
NO : Repair the wiring harness.

Step 7. Retest the system.

Check that the windshield wipers stop at the specified park position.

Q: Is the check result normal?
YES : The trouble can be an intermittent malfunction (Refer to GROUP 00 – How to Cope with Intermittent Malfunction P.00-5).
NO : Replace the front-ECU.

Main Index
Group TOC

INSPECTION PROCEDURE G-4: The windshield wipers do not work normally.

⚠ CAUTION
Whenever the ECU is replaced, ensure that the input and output signal circuits are normal.

Windshield Wiper Motor Drive Circuit

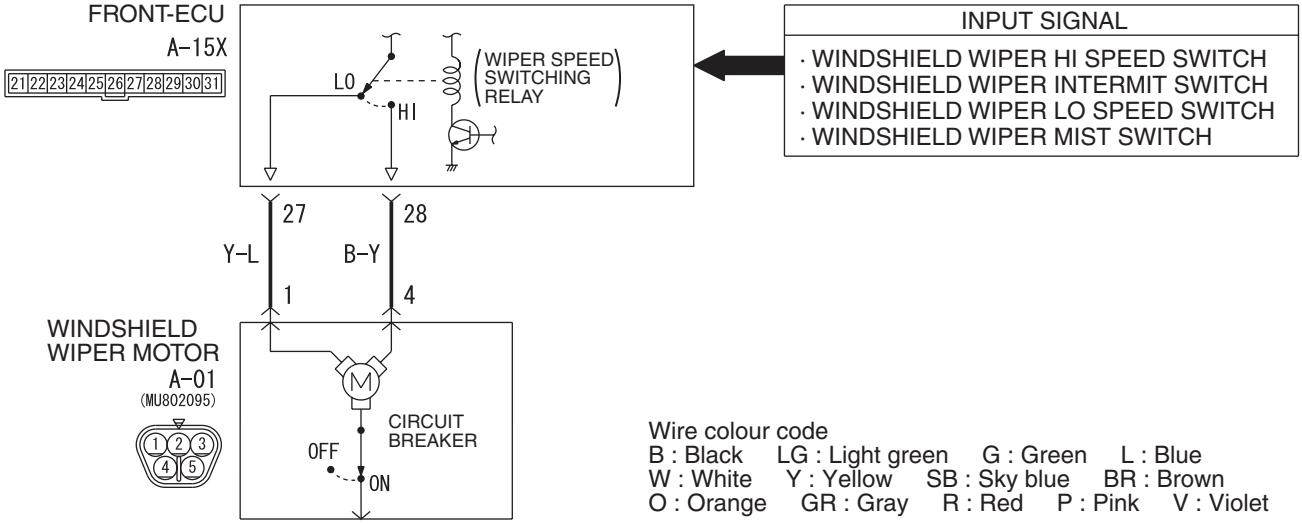

Wire colour code
B : Black LG : Light green G : Green L : Blue
W : White Y : Yellow SB : Sky blue BR : Brown
O : Orange GR : Gray R : Red P : Pink V : Violet

W4X54E152A

COMMENTS ON TROUBLE SYMPTOM

The windshield wiper motor, the column switch or the front-ECU may be defective.

POSSIBLE CAUSES

- Malfunction of the windshield wiper motor
- Malfunction of the column switch
- Malfunction of the front-ECU
- Damaged harness wires and connectors

Main Index
Group TOC

Step 1. Pulse check

Check the input signals below which are related to the windshield wiper.

System switch	Check condition
Ignition switch (ACC)	When turned from the LOCK (OFF) position to the ACC position.
Windshield mist wiper switch	When the switch is turned from off to on.
Windshield intermittent wiper switch	When the switch is turned from off to on.
Windshield low-speed wiper switch	When the switch is turned from off to on.
Windshield high-speed wiper switch	When the switch is turned from off to on.

OK: The M.U.T.-III sounds or the voltmeter needle fluctuates.

Q: Are the check result normal?

All the signals are received normally : Go to Step 2.

The ignition switch (ACC) signal is not received. : Refer to inspection procedure P-1 "The ignition switch (ACC) signal is not received P.54B-319."

Windshield mist wiper switch signal is not received. : Refer to inspection procedure P-7 "The column switch (windshield wiper washer and rear wiper washer switch) signal is not received P.54B-339."

Windshield intermittent wiper switch signal is not received. : Refer to inspection procedure P-7 "The column switch (windshield wiper washer and rear wiper washer switch) signal is not received P.54B-339."

Windshield low-speed wiper switch signal is not received. : Refer to inspection procedure P-7 "The column switch (windshield wiper washer and rear wiper washer switch) signal is not received P.54B-339."

Windshield high-speed wiper switch signal is not received. : Refer to inspection procedure P-7 "The column switch (windshield wiper washer and rear wiper washer switch) signal is not received P.54B-339."

Step 2. Connector check: A-01 windshield wiper motor connector

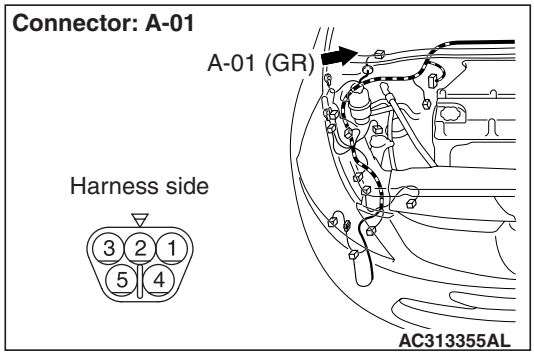

Q: Is the check result normal?

YES : Go to Step 3.

NO : Repair the defective connector.

Step 3. Check the windshield wiper motor assembly.

Refer to GROUP 51 – Windshield wiper P.51-20.

Q: Is the check result normal?

YES : Go to Step 4.

NO : Replace the windshield wiper motor assembly.

Step 4. Retest the system.

Check that the windshield wipers work normally by moving the switch to HI or MIST position.

Q: Is the check result normal?

YES : Go to Step 5.

NO : Go to Step 8.

Step 5. Connector check: A-15X front-ECU connector

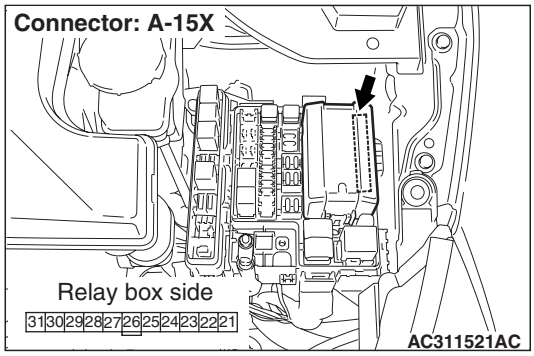

Q: Is the check result normal?

YES : Go to Step 6.

NO : Repair the defective connector.

Main Index
Group TOC

Step 6. Check the wiring harness between A-15X front-ECU connector terminal No.27 and A-01 windshield wiper motor connector terminal No.1.

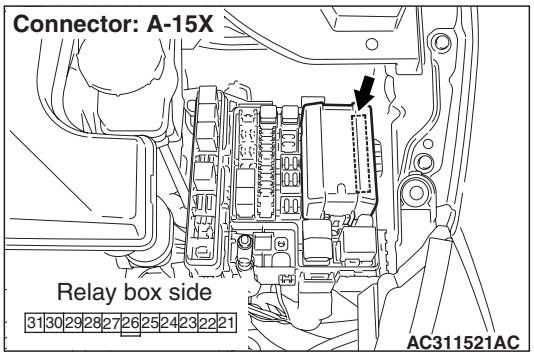

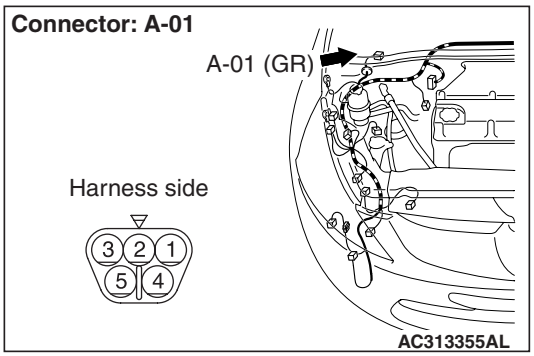

- Check the output lines for open circuit.

Q: Is the check result normal?
YES : Go to Step 7.
NO : Repair the wiring harness.

Step 7. Retest the system.
Check that the windshield wipers work normally by moving the switch to each position.

Q: Is the check result normal?
YES : The trouble can be an intermittent malfunction (Refer to GROUP 00 – How to Cope with Intermittent Malfunction P.00-5).
NO : Replace the front-ECU.

Step 8. Connector check: A-15X front-ECU connector

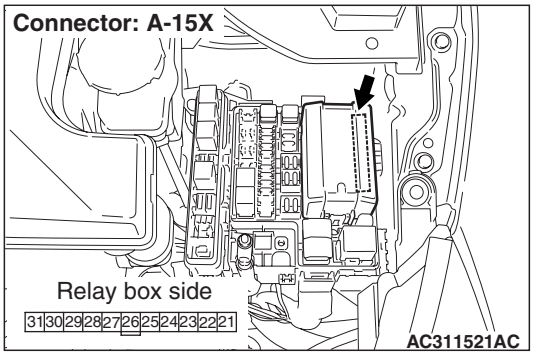

Q: Is the check result normal?
YES : Go to Step 9.
NO : Repair the defective connector.

Step 9. Check the wiring harness between A-15X front-ECU connector terminal No.28 and A-01 windshield wiper motor connector terminal No.4.

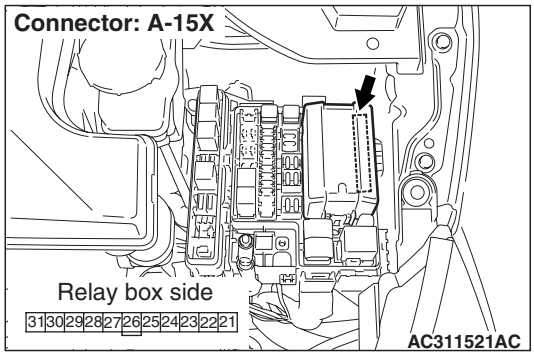

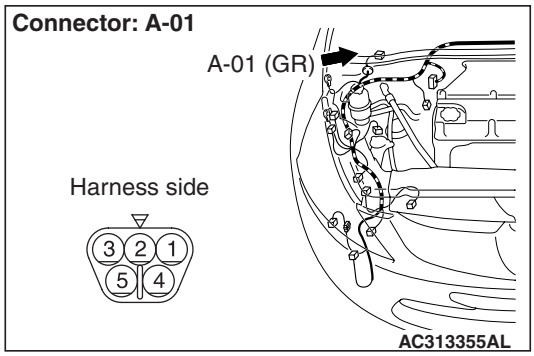

- Check the output lines for open circuit.

Q: Is the check result normal?
YES : Go to Step 10.
NO : Repair the wiring harness.

Step 10. Retest the system.
Check that the windshield wipers work normally by moving the switch to each position.

Q: Is the check result normal?
YES : The trouble can be an intermittent malfunction (Refer to GROUP 00 – How to Cope with Intermittent Malfunction P.00-5).
NO : Replace the front-ECU.

Main Index
Group TOC

INSPECTION PROCEDURE G-5: The intermittent wiper interval can not be adjusted by operating the windshield intermittent wiper volume control.

⚠ CAUTION
Whenever the ECU is replaced, ensure that the input and output signal circuits are normal.

Windshield Wiper Intermittent Volume Input Signal

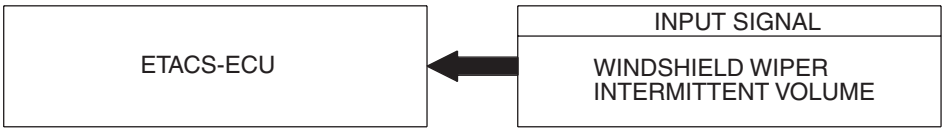

W4X54E165A

COMMENTS ON TROUBLE SYMPTOM

The column switch or the front-ECU may be defective.

POSSIBLE CAUSES

- Malfunction of the column switch
- Malfunction of the front-ECU
- Damaged harness wires and connectors

DIAGNOSIS PROCEDURE

Step 1. Pulse check
Check the input signals below which are related to the windshield intermittent wiper function.

System switch	Check condition
Ignition switch (ACC)	When turned from LOCK (OFF) position to the ACC position
Windshield intermittent wiper volume	When the windshield intermittent wiper volume is rotated from "FAST" to "SLOW" (a pulse is sent around the volume middle position)

OK: The M.U.T.-III sounds or the voltmeter needle fluctuates.

Q: Are the check result normal?
All the signals are received normally. : Go to Step 2.
The ignition switch (IG1) signal is not received. : Refer to inspection procedure P-1 "The ignition switch (ACC) signal is not received P.54B-319."
The windshield wiper volume signal is not received. : Refer to inspection procedure P-8 "The windshield wiper volume signal is not received P.54B-341."

Step 2. Retest the system.
Check that the windshield intermittent wiper interval can be adjusted by operating the windshield intermittent wiper volume control.

OK: The intermittent wiper interval is changed as the intermittent wiper volume is rotated.

Q: Is the check result normal?
YES : The trouble can be an intermittent malfunction (Refer to GROUP 00 – How to Cope with Intermittent Malfunction P.00-5).
NO : Replace the front-ECU

Main Index
Group TOC

INSPECTION PROCEDURE G-6: The intermittent wiper interval is not changed according to the vehicle speed.

⚠ CAUTION
Whenever the ECU is replaced, ensure that the input and output signal circuits are normal.

Variable Intermittent Wiper Control Circuit

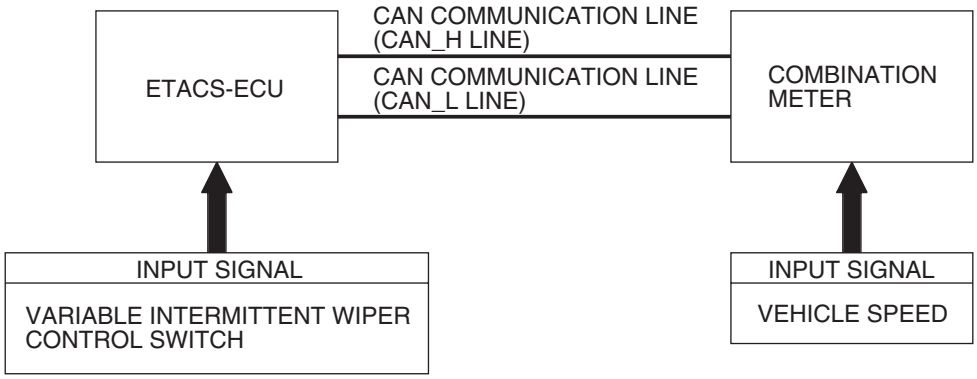

W4X54E155A

COMMENTS ON TROUBLE SYMPTOM

The ETACS-ECU calculates the intermittent wiper interval according to the vehicle speed signal which is sent by the engine-ECU.
If the intermittent wiper interval does not depend on the vehicle speed, the input circuit of the vehicle speed signal and the ETACS-ECU may be defective.

POSSIBLE CAUSES

- Malfunction of the vehicle speed signal (engine-A/T-ECU <A/T> or engine-ECU <M/T>)
- Malfunction of the ETACS-ECU
- Damaged harness wires and connectors

DIAGNOSIS PROCEDURE

Step 1. Retest the system.
Check that the windshield intermittent wiper interval can be adjusted by operating the windshield intermittent wiper volume control.

Q: Is the check result normal?
YES : Go to Step 2.
NO : Refer to Inspection Procedure G-5 "The intermittent wiper interval can not be adjusted by operating the windshield intermittent wiper volume control P.54B-191."

Step 2. Pulse check
Check the input signals below which are related to the vehicle speed-dependent intermittent wiper.

System switch	Check condition
Vehicle speed signal	When the vehicle speed has reached 10 km/h or more.

OK: The M.U.T.-III sounds or the voltmeter needle fluctuates.

Q: Is the check result normal?
YES : Go to Step 3.
NO : Refer to inspection procedure P-23 "The vehicle speed signal is not received P.54B-408."

Main Index
Group TOC

Step 3. Check the SWS monitor customized function.

Use the SWS monitor customize function to confirm that "SPEED SEN WIP" is set to "W.FUNCTION". The SWS monitor must be used in order to confirm and change that setting. Use the SWS monitor to confirm and/or change the customized function.

⚠ CAUTION

The SWS monitor must be used in order to confirm and change that setting. Use the SWS monitor to confirm and/or change the customized function.

Q: Is the check result normal?

YES : Go to Step 4.

NO : Use the SWS monitor customize function to set the "SPEED SEN WIP" to "W.FUNCTION" (Refer to GROUP 54C – Customize adjustment P.54C-432).

Step 4. Retest the system.

(1) Replace the ETACS-ECU.
(2) Check that the vehicle speed-dependent intermittent wiper system should work normally.

Q: Is the check result normal?

YES : The trouble can be an intermittent malfunction (Refer to GROUP 00 – How to Cope with Intermittent Malfunction P.00-5).

NO : Replace the combination meter.

Main Index
Group TOC

INSPECTION PROCEDURE G-7: The windshield washer does not work.

⚠ CAUTION
Whenever the ECU is replaced, ensure that the input and output signal circuits are normal.

Windshield Washer Motor Circuit

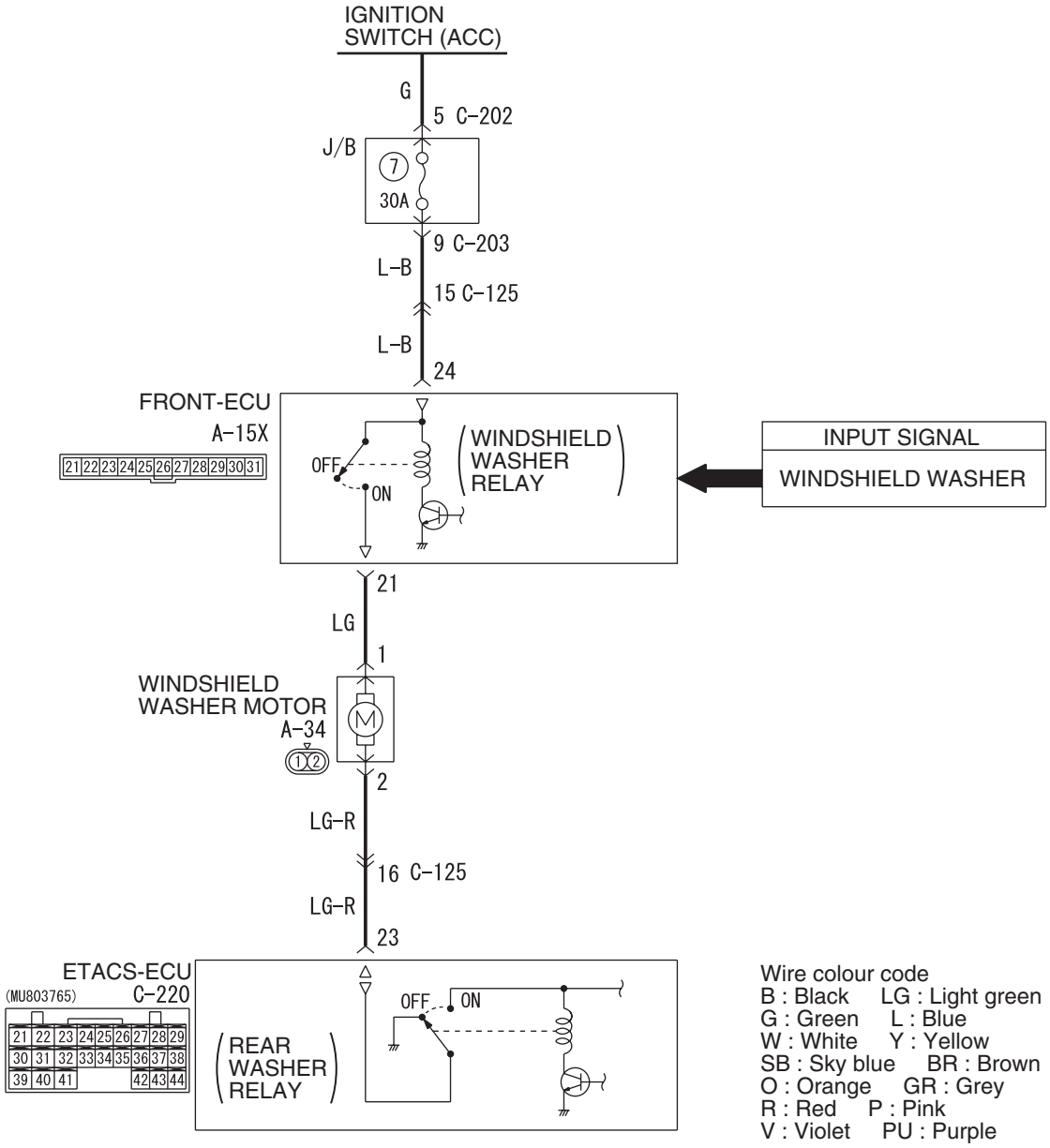

COMMENTS ON TROUBLE SYMPTOM

The windshield washer motor, the column switch or the front-ECU may be defective.

POSSIBLE CAUSES

- Malfunction of the windshield washer motor
- Malfunction of the column switch
- Malfunction of the front-ECU
- Damaged harness wires and connectors

Main Index
Group TOC

DIAGNOSIS PROCEDURE

Step 1. Check the operation of the windshield wipers.

Check that the windshield wipers work normally.

Q: Is the check result normal?

YES : Go to Step 2.

NO : Refer to Inspection Procedure G-1 "The windshield wipers does not work at all P.54B-178."

Step 2. Pulse check

Check the input signals below which are related to the windshield wiper.

System switch	Check condition
Ignition switch (ACC)	When turned from the LOCK (OFF) position to the ACC position.
Windshield washer switch	When the switch is turned from off to on.

OK: The M.U.T.-III sounds or the voltmeter needle fluctuates.

Q: Are the check result normal?

All the signals are received normally : Go to Step 3.

The ignition switch (ACC) signal is not received. : Refer to inspection procedure P-1 "The ignition switch (ACC) signal is not received P.54B-319."

Windshield washer switch signal is not received. : Refer to inspection procedure P-7 "The column switch (windshield wiper washer and rear wiper washer switch) signal is not received P.54B-339."

Step 3. Connector check: A-34 windshield washer motor connector and C-220 ETACS-ECU connector

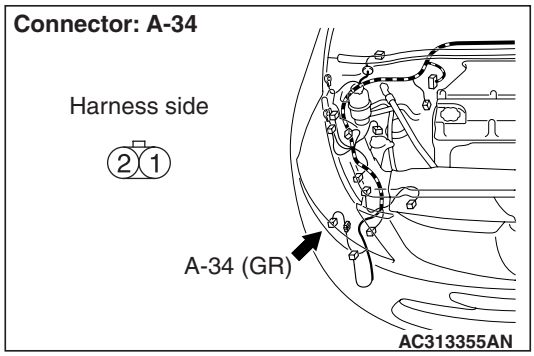

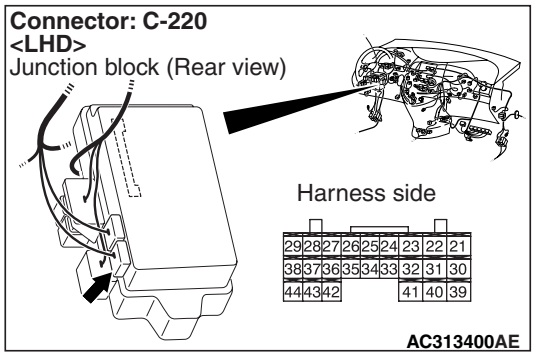

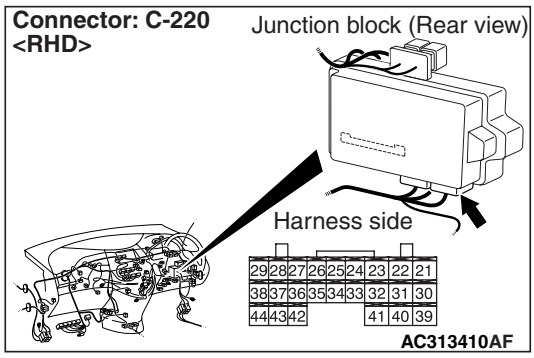

Q: Is the check result normal?

YES : Go to Step 4.

NO : Repair the connector.

Step 4. Check the windshield washer motor assembly.

Refer to GROUP 51 – Windshield washer P.51-23.

Q: Is the check result normal?

YES : Go to Step 5

NO : Replace the windshield washer motor.

Main Index
Group TOC

Step 5. Check the wiring harness between A-34 windshield washer motor connector terminal No.2 and C-220 ETACS-ECU connector terminal No.23.

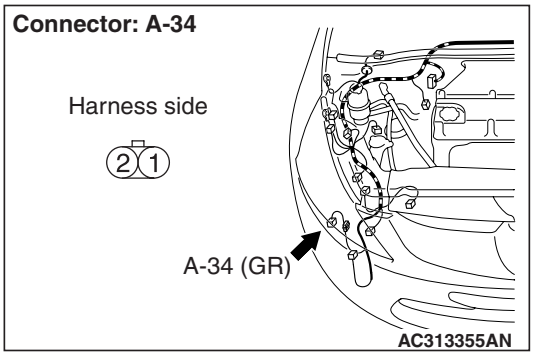

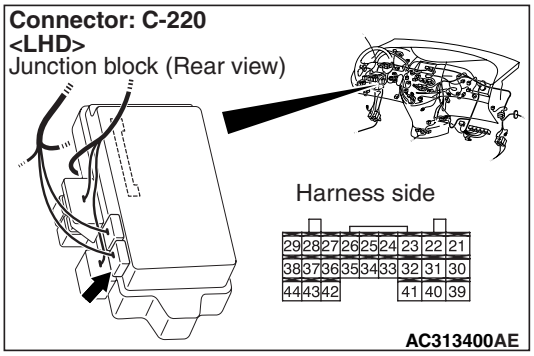

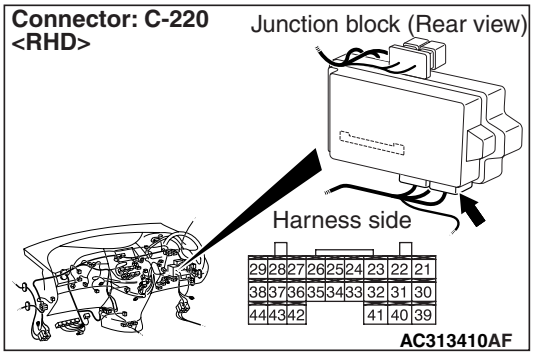

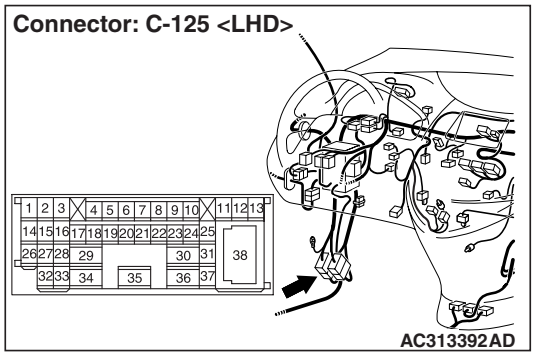

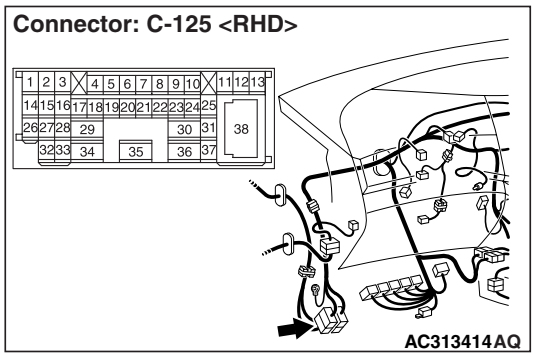

NOTE: Prior to the wiring harness inspection, check the intermediate connector C-125 and repair if necessary.

- Check the earth wires for open circuit.

Q: Is the check result normal?
YES : Go to Step 6.
NO : Repair the wiring harness.

Step 6. Connector check: A-15X front-ECU connector

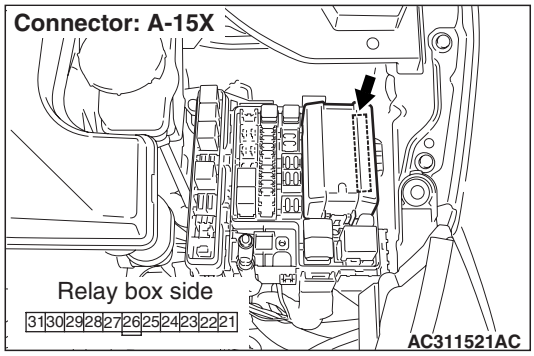

Q: Is the check result normal?
YES : Go to Step 7.
NO : Repair the connector.

Main Index
Group TOC

Step7. Check the wiring harness between A-34 windshield washer motor connector terminal No.1 and A-15X front-ECU connector terminal No.21.

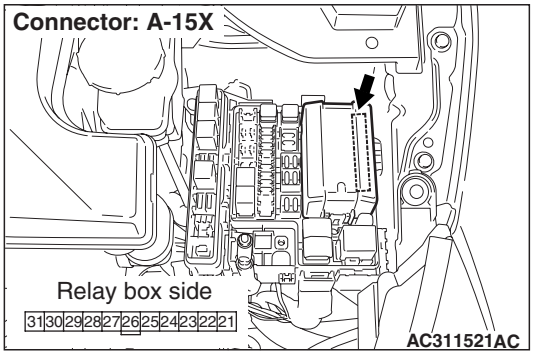

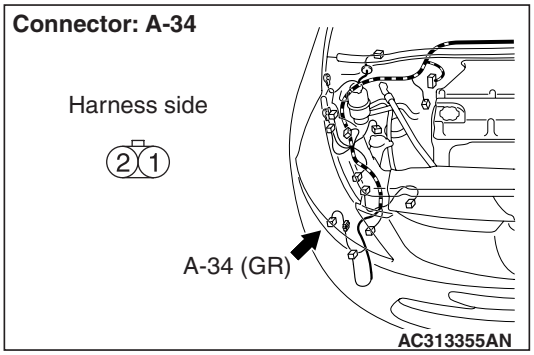

- Check the power supply line to the ignition switch (ACC) for open circuit.

Q: Is the check result normal?
YES : . Go to Step 8.
NO : . Repair the wiring harness.

Step 8. Retest the system.
The windshield washer should now work normally.

Q: Is the check result normal?
YES : The trouble can be an intermittent malfunction (Refer to GROUP 00 – How to Cope with Intermittent Malfunction P.00-5).
NO : Replace the front-ECU.

Main Index
Group TOC

REAR WIPER AND WASHER

INSPECTION PROCEDURE H-1: The rear wiper does not work at all.

⚠ CAUTION
Whenever the ECU is replaced, ensure that the input and output signal circuits are normal.

Rear Wiper Drive Circuit

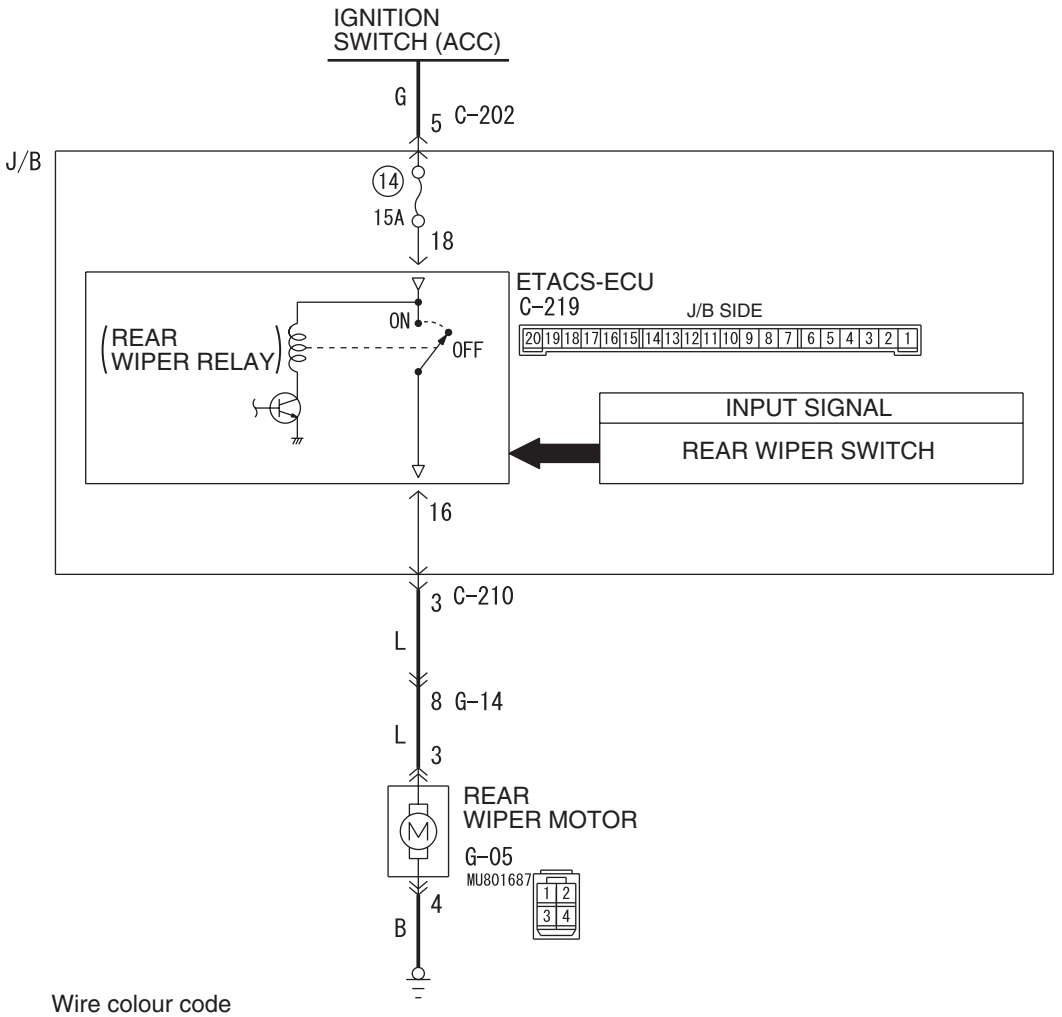

Wire colour code
B : Black LG : Light green G : Green L : Blue W : White Y : Yellow SB : Sky blue
BR : Brown O : Orange GR : Gray R : Red P : Pink V : Violet

W4X54E087A

COMMENTS ON TROUBLE SYMPTOM

If the rear wiper does not work normally, the input signal circuits to the components below, the rear wiper motor or the ETACS-ECU may be defective.

- Ignition switch (ACC)
- Rear wiper switch

POSSIBLE CAUSES

- Malfunction of the rear wiper motor
- Malfunction of the column switch
- Malfunction of the ETACS-ECU
- Damaged harness wires and connectors

Main Index
Group TOC

DIAGNOSTIC PROCEDURE

Step 1. Use the M.U.T.-III to confirm a diagnosis code.

Check that the ETACS-ECU sets a diagnosis code.

Q: Is diagnosis code set?

YES : Refer to diagnosis code chart P.54B-26.

NO : Go to Step 2.

Step 2. Pulse check

Check the input signals below which are related to the rear wiper.

System switch	Check condition
Ignition switch (ACC)	When turned from the LOCK (OFF) position to the ACC position
Column switch (rear wiper switch)	When the switch is turned from off to on

OK: The M.U.T.-III sounds or the voltmeter needle fluctuates.

Q: Are the check result normal?

All the signals are received normally. : Go to Step 3.

The ignition switch (ACC) signal is not received. : Refer to inspection procedure P-1 "The ignition switch (ACC) signal is not received P.54B-319."

The column switch (rear wiper switch) signal is not received. : Refer to inspection procedure P-7 "The column switch (windshield wiper washer and rear wiper washer switch) signal is not received P.54B-339."

Step 3. Connector check: G-05 rear wiper motor connector

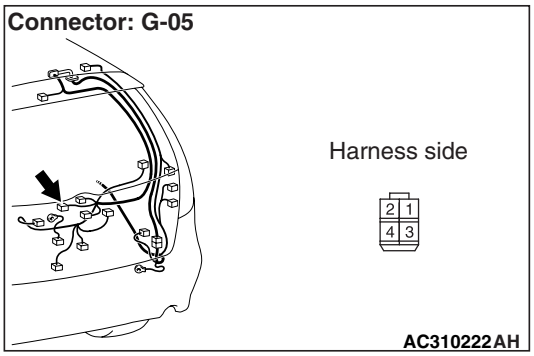

Q: Is the check result normal?

YES : Go to Step 4.

NO : Repair the connector.

Step 4. Check the rear wiper motor.

Refer to GROUP 51 – Rear wiper and washer P.51-27.

Q: Is the check result normal?

YES : Go to Step 5.

NO : Replace the rear wiper motor.

Step 5. Resistance measurement at the G-05 rear wiper motor connector.

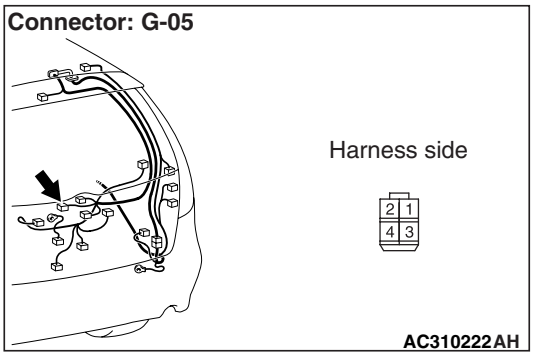

(1) Disconnect the connector, and measure at the wiring harness side.

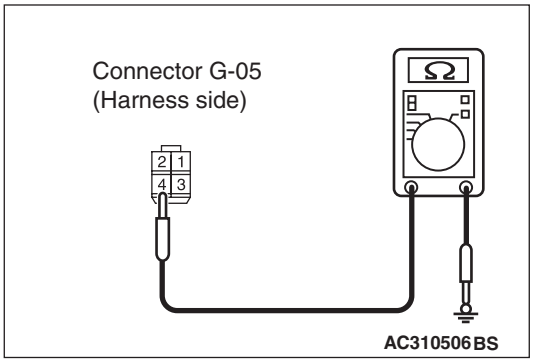

(2) Resistance between G-05 rear wiper motor connector terminal No.4 and body earth

OK: 2 Ω or less

Q: Is the check result normal?

YES : Go to Step 7.

NO : Go to Step 6.

Main Index
Group TOC

Step 6. Check the wiring harness between G-05 rear wiper motor connector terminal No.4 and body earth.

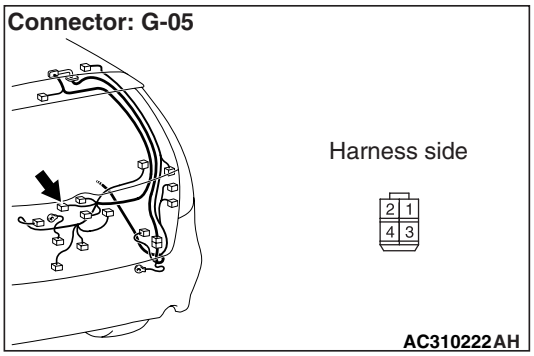

- Check the earth line for open or short circuit.

Q: Is the check result normal?

YES : The trouble can be an intermittent malfunction (Refer to GROUP 00 – How to Cope with Intermittent Malfunction P.00-5).

NO : Repair the wiring harness.

Step 7. Connector check: C-219 ETACS-ECU connector

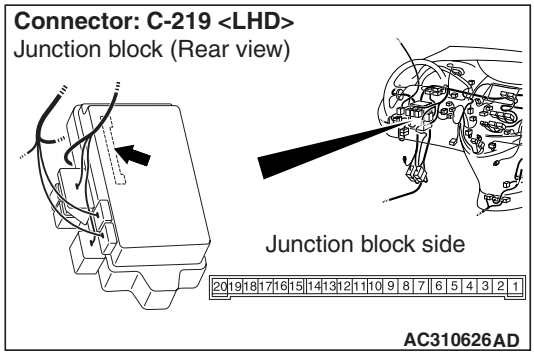

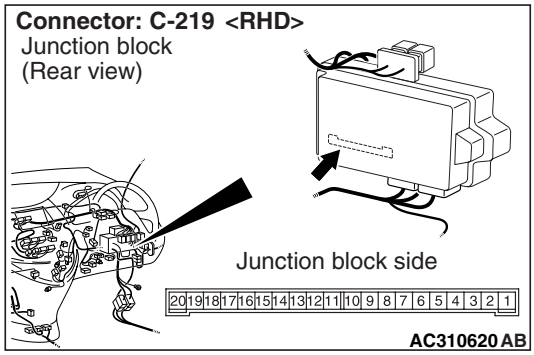

Q: Is the check result normal?

YES : Go to Step 8.

NO : Repair the connector.

Main Index
Group TOC

Step 8. Check the wiring harness between C-219 ETACS-ECU connector terminal No.16 and G-05 rear wiper motor connector terminal No.3.

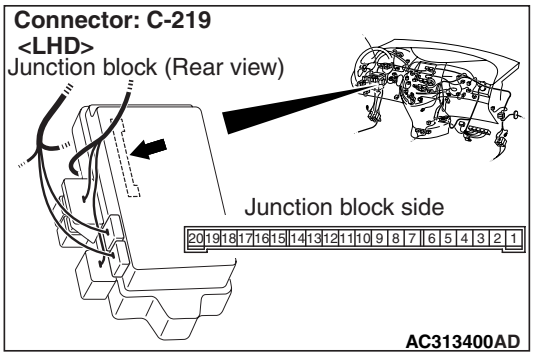

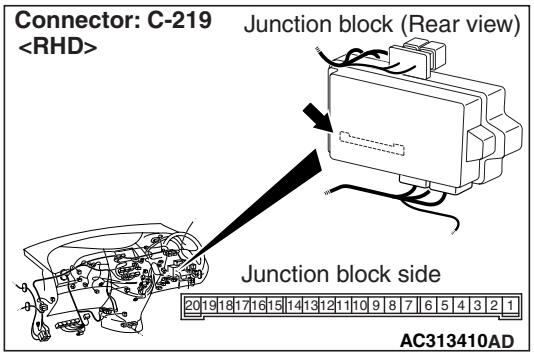

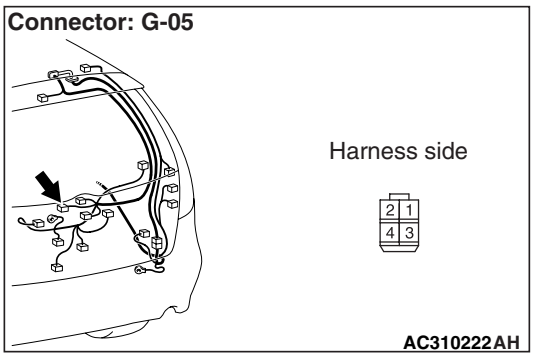

NOTE:

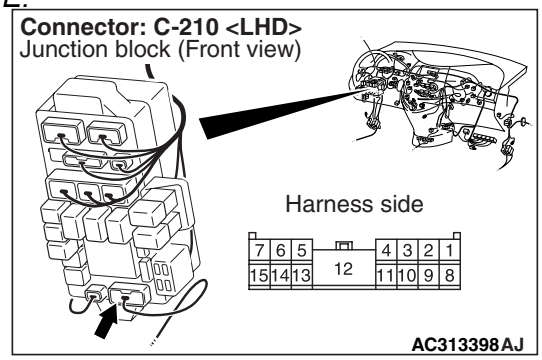

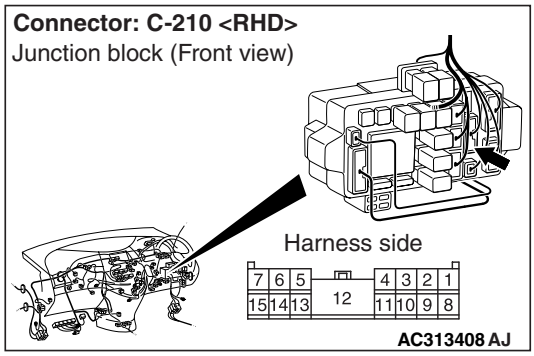

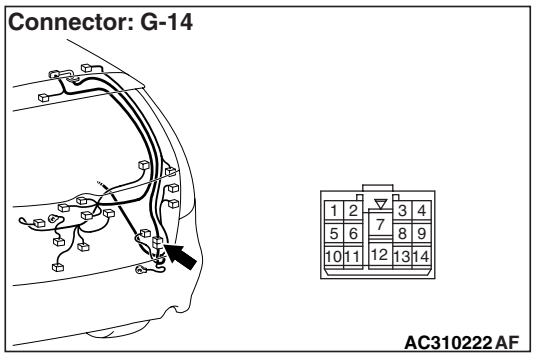

Prior to the wiring harness inspection, check intermediate connector G-14 and junction block connectors C-210, and repair if necessary.

- Check the output line.

Q: 1Is the check result normal?
YES : Go to Step 9.
NO : Repair the wiring harness.

Step 9. Retest the system.

Check that the rear wiper works normally.

Q: Is the check result normal?
YES : The trouble can be an intermittent malfunction (Refer to GROUP 00 – How to Cope with Intermittent Malfunction P.00-5).
NO : Replace the ETACS-ECU.

Main Index
Group TOC

INSPECTION PROCEDURE H-2: The rear wiper does not stop at the specified park position.

⚠ CAUTION
Whenever the ECU is replaced, ensure that the input and output signal circuits are normal.

Rear Wiper Auto-stop Signal Input

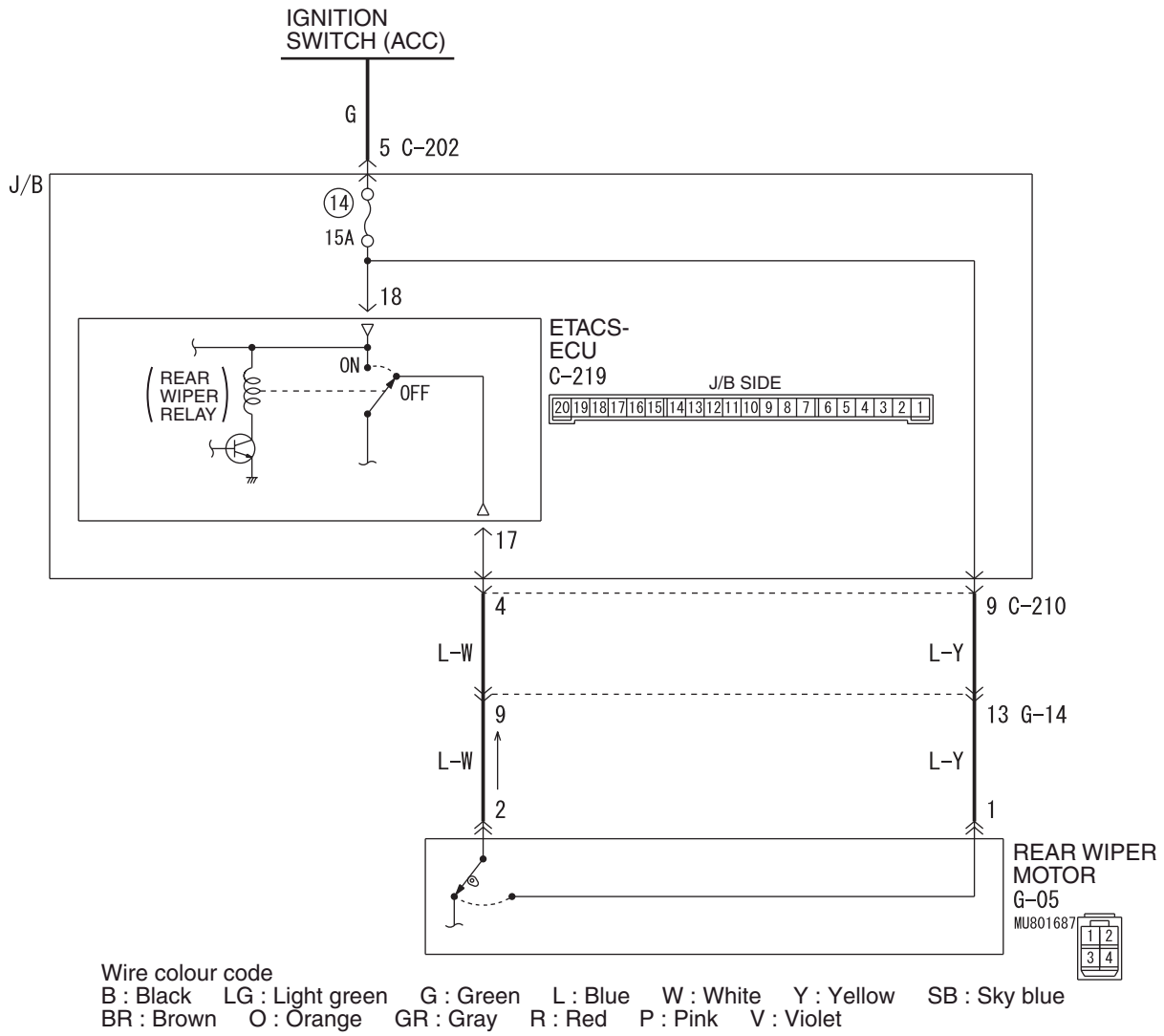

COMMENTS ON TROUBLE SYMPTOM

If the rear wiper does not stop normally within the predetermined range, the rear wiper motor or the ETACS-ECU may be defective.

POSSIBLE CAUSES

- Malfunction of the rear wiper motor
- Malfunction of the ETACS-ECU
- Damaged harness wires and connectors

Main Index
Group TOC

Step 1. Connector check: G-05 rear wiper motor connector

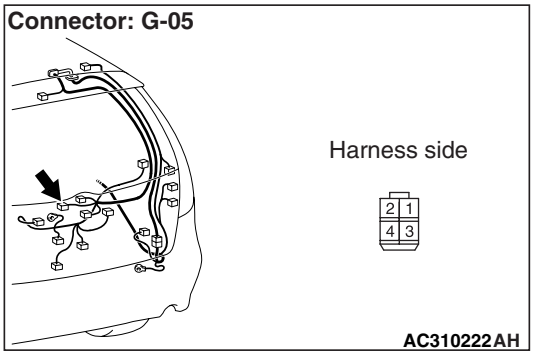

Q: Is the check result normal?
YES : Go to Step 2.
NO : Repair the connector.

Step 2. Check the rear wiper motor.
Refer to GROUP 51 – Rear wiper and washer P.51-27.

Q: Is the check result normal?
YES : Go to Step 3.
NO : Replace the rear wiper motor.

Step 3. Voltage measurement at the G-05 rear wiper motor connector.

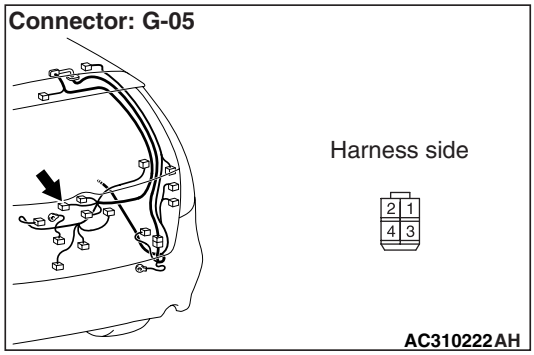

(1) Disconnect the connector, and measure at the wiring harness side.
(2) Ignition switch: ACC

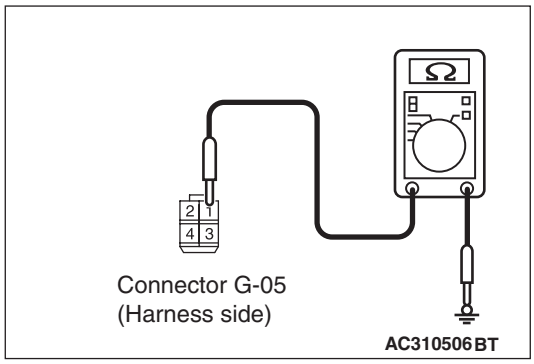

(3) Check the voltage between G-05 rear wiper motor connector terminal No.1 and body earth

OK: System voltage

Q: Is the check result normal?
YES : Go to Step 5.
NO : Go to Step 4.

Main Index
Group TOC

Step 4. Check the wiring harness between ignition switch (ACC) and G-05 rear wiper motor connector terminal No.1.

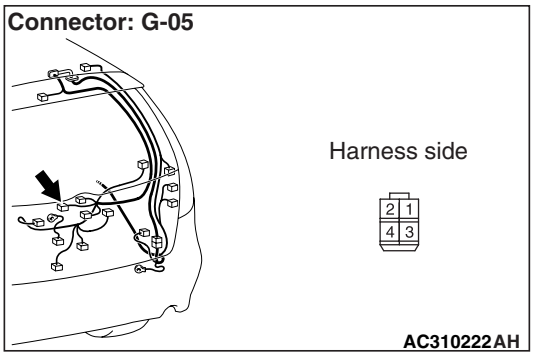

NOTE:

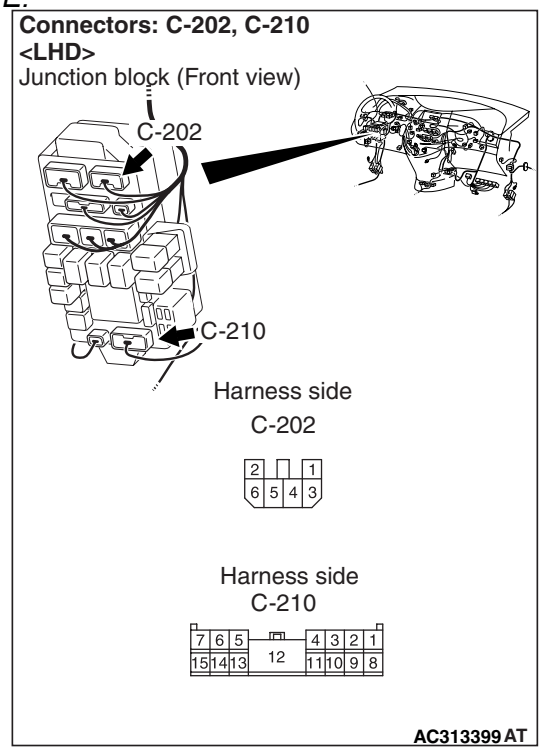

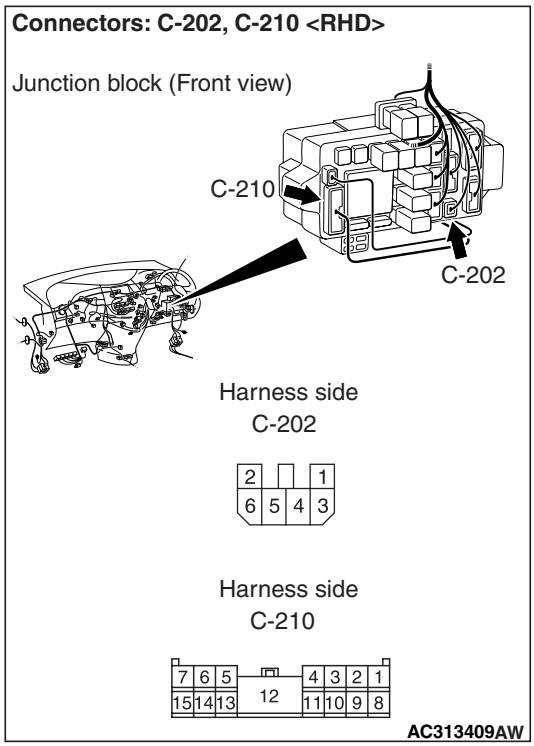

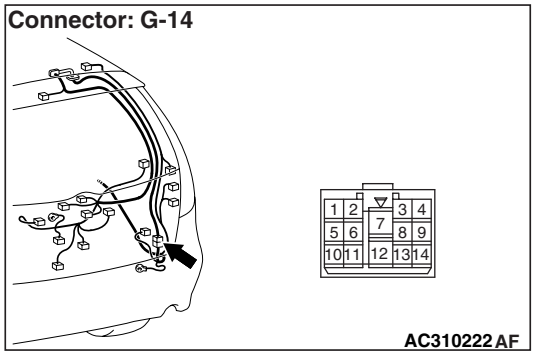

Prior to the wiring harness inspection, check intermediate connector G-14 and junction block connectors C-202, C-210, and repair if necessary.

- Check the power supply line for open or short circuit.

Q: Is the check result normal?

YES : The trouble can be an intermittent malfunction (Refer to GROUP 00 – How to Cope with Intermittent Malfunction P.00-5).

NO : Repair the wiring harness.

Step 5. Connector check: C-219 ETACS-ECU connector

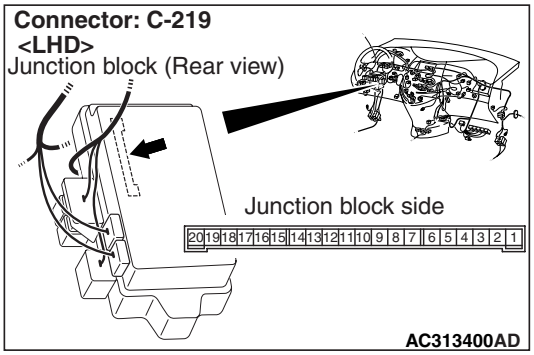

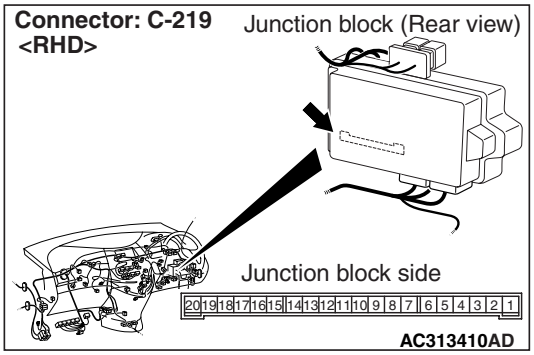

Q: Is the check result normal?

YES : Go to Step 6.

NO : Repair the connector.

Step 6. Check the wiring harness between C-219 ETACS-ECU connector terminal No.17 and G-05 rear wiper motor connector terminal No.2.

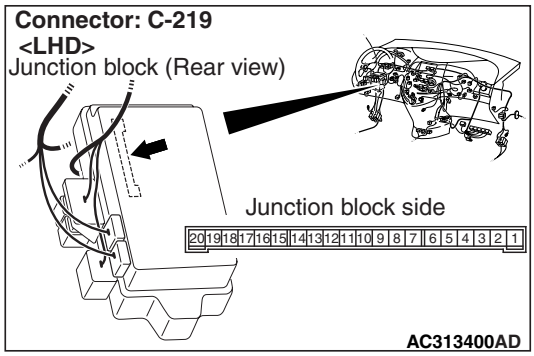

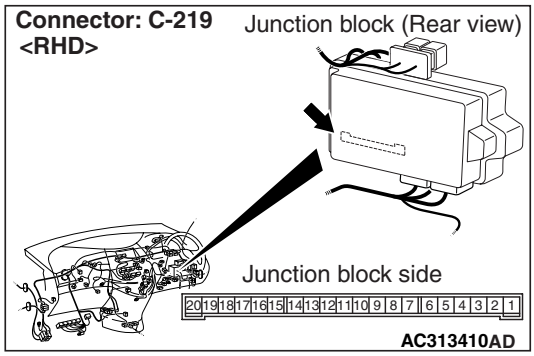

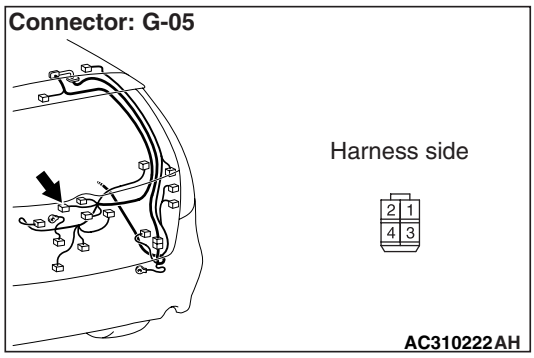

NOTE:

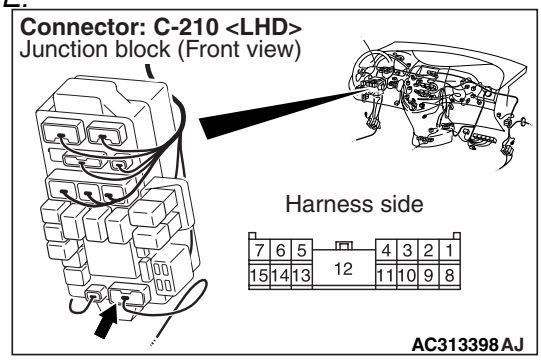

Main Index
Group TOC

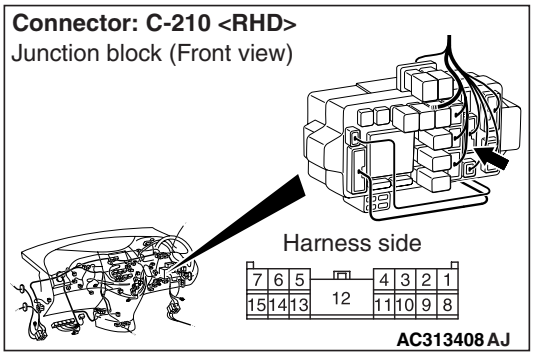

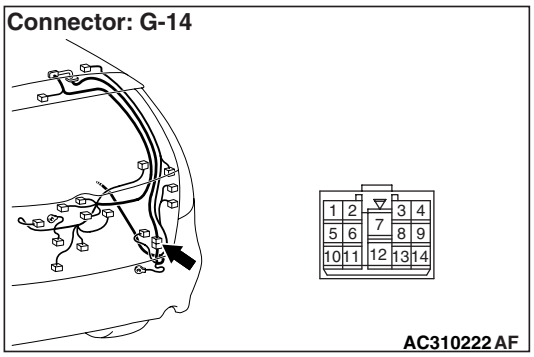

Prior to the wiring harness inspection, check intermediate connector G-14, junction block connectors C-210, and repair if necessary.

- Check the power supply line for open or short circuit.

Q: Is the check result normal?
YES : Go to Step 7.
NO : Repair the wiring harness.

Step 7. Retest the system.
Check that the rear wiper auto stop function works normally.

Q: Is the check result normal?
YES : The trouble can be an intermittent malfunction (Refer to GROUP 00 – How to Cope with Intermittent Malfunction P.00-5).
NO : Replace the ETACS-ECU.

INSPECTION PROCEDURE H-3: When the selector lever is moved to "R" position during the rear wiper operation, the rear wiper does not operate at the continuous mode. <A/T>

⚠ CAUTION
Whenever the ECU is replaced, ensure that the input and output signal circuits are normal.

"R" Position During Wiper Operation Circuit <A/T>

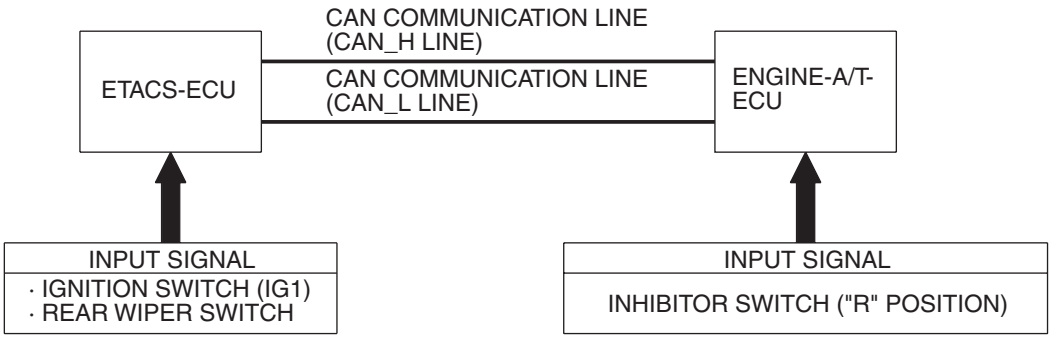

W4X54E176A

Main Index
Group TOC

OPERATION

The ETACS-ECU determines whether the shift position is at "R" or not according to the shift position signal which is sent by the engine-A/T-ECU.

COMMENTS ON TROUBLE SYMPTOM

If the rear wiper does not operate consecutively when the selector lever is moved to the R position during the rear wiper operation, the shift position input signal circuit or the ETACS-ECU may be defective.

POSSIBLE CAUSES

- Malfunction of the ETACS-ECU
- Damaged harness wires and connectors

DIAGNOSIS PROCEDURE

Step 1. Check the operation of the rear wiper.

Check that the rear wiper system should work normally by operating the rear wiper switch.

Q: Is the check result normal?

YES : Go to Step 2.

NO : Refer to Inspection Procedure H-1 "Rear wiper does not work at all P.54B-198."

Step 2. Pulse check

Check the input signal, which are related to the R (reverse) gear-linked rear wiper operation.

System switch	Check condition
Inhibitor switch (reverse position)	When the ignition switch is turned ON and the selector lever is moved to the R position.

OK: The M.U.T.-III sounds or the voltmeter needle fluctuates.

Q: Is the check result normal?

YES : Go to Step 3.

NO : Refer to diagnosis code No.11 inspection procedure "Engine-A/T-ECU time-out (related to engine) P.54B-50 ."

Step 3. Retest the system.

Check that the rear wiper operates consecutively when the selector lever is moved to the R position during the rear wiper operation.

Q: Is the check result normal?

YES : The trouble can be an intermittent malfunction (Refer to GROUP 00 – How to Cope with Intermittent Malfunction P.00-5).

NO : Replace the ETACS-ECU.

Main Index
Group TOC

INSPECTION PROCEDURE H-3: When the shift lever is moved to "R" position during the rear wiper operation, the rear wiper does not operate at the continuous mode. <M/T>

⚠ CAUTION
Whenever the ECU is replaced, ensure that the input and output signal circuits are normal.

"R" Position During Rear Wiper Operation Circuit <M/T>

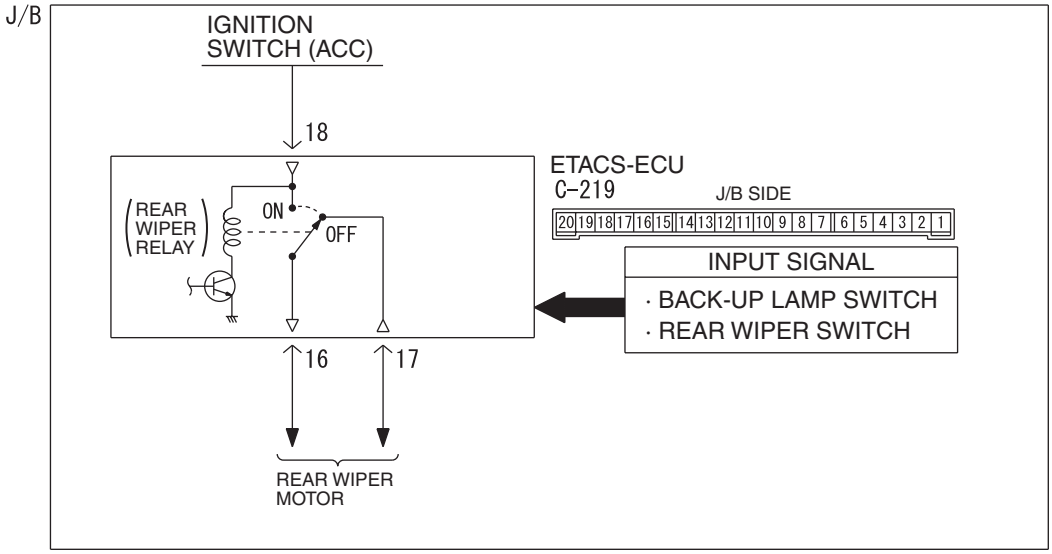

W4X54E089A

COMMENTS ON TROUBLE SYMPTOM

If the rear wiper does not operate consecutively when the shift lever is moved to the R position during the rear wiper operation, the input signal circuit to the back-up lamp switch ("R" position) or the ETACS-ECU may be defective.

POSSIBLE CAUSES

- Malfunction of the back-up lamp switch
- Malfunction of the ETACS-ECU
- Damaged harness wires and connectors

Step 1. Confirm the operation of the rear wiper.
Check that the rear wiper work normally.

Q: Is the check result normal?
YES : Go to Step 2.
NO : Refer to Inspection Procedure H-1 "The rear wiper does not work at all P.54B-198."

Step 2. Pulse check
Check the input signal, which are related to the R (reverse) gear-linked rear wiper operation.

System switch	Check condition
Back-up lamp switch	When the ignition switch is turned ON and the shift lever is moved to the R position.

OK: The M.U.T.-III sounds or the voltmeter needle fluctuates.

Q: Is the check result normal?
YES : Go to Step 3.
NO : Refer to inspection procedure P-3 "The back-up lamp switch signal is not received P.54B-325."

Main Index
Group TOC

Step 3. Retest the system.
Check that the rear wiper operates consecutively when the shift lever is moved to the R position during the rear wiper operation.

Q: Is the check result normal?
YES : The trouble can be an intermittent malfunction (Refer to GROUP 00 – How to Cope with Intermittent Malfunction P.00-5).
NO : Replace the ETACS-ECU.

INSPECTION PROCEDURE H-4: The rear washer does not work.

⚠ CAUTION
Whenever the ECU is replaced, ensure that the input and output signal circuits are normal.

Rear Washer Drive Circuit

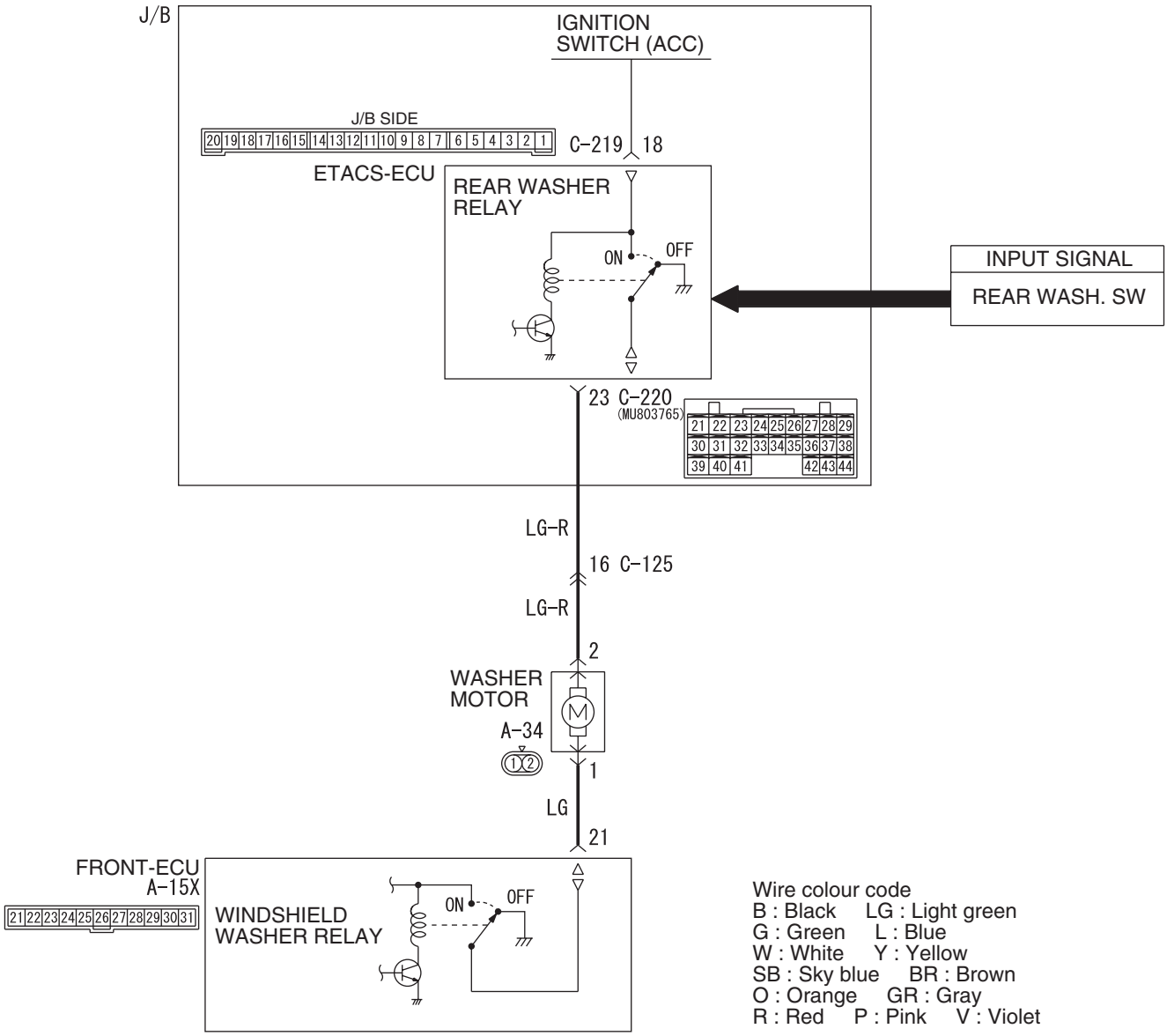

Main Index
Group TOC

COMMENTS ON TROUBLE SYMPTOM

If the rear washer does not work normally, the input signal circuits to the washer switch, rear washer motor or the ETACS-ECU may be defective.

POSSIBLE CAUSES

- Malfunction of the washer motor
- Malfunction of the column switch
- Malfunction of the ETACS-ECU
- Malfunction of the front-ECU
- Damaged harness wires and connectors

Step 1. Confirm the operation of the rear wiper.

Check that the rear wiper work normally.

Q: Is the check result normal?

YES : Go to Step 2.

NO : Refer to Inspection Procedure H-1 "The rear wiper does not work at all P.54B-198."

Step 2. Pulse check

Check the input signals below which are related to the rear washer.

- Ignition switch: ACC

System switch	Check condition
Column switch (rear washer switch)	When the switch is turned from off to on

OK: The M.U.T.-III sounds or the voltmeter needle fluctuates.

Q: Are the check result normal?

YES : Go to Step 3.

NO : Refer to inspection procedure P-7 "The column switch (windshield wiper washer and rear wiper washer switch) signal is not received P.54B-339."

Step 3. Connector check: A-34 washer motor connector and A-15X front ECU connector

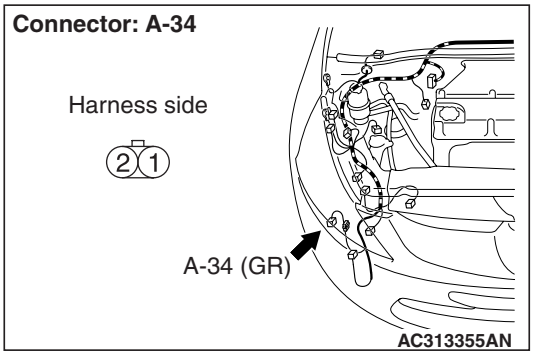

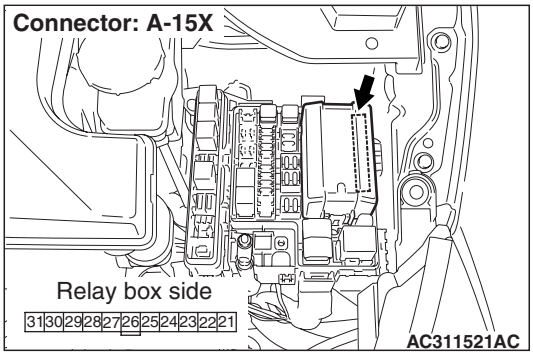

Q: Is the check result normal?

YES : Go to Step 4.

NO : Repair the connector.

Step 4. Check the washer motor.

Refer to GROUP 51 – Rear wiper and washer P.51-27.

Q: Is the check result normal?

YES : Go to Step 5.

NO : Replace the washer motor.

Step 5. Check the wiring harness between A-34 washer motor connector terminal No.1 and A-15X front ECU connector No.21.

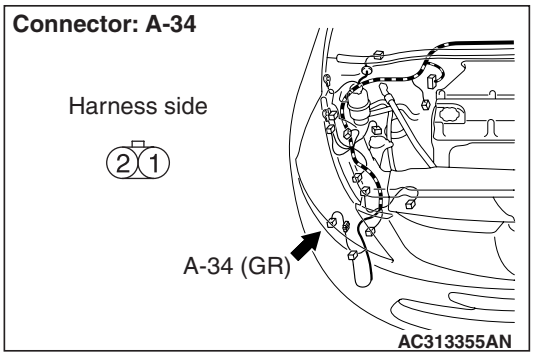

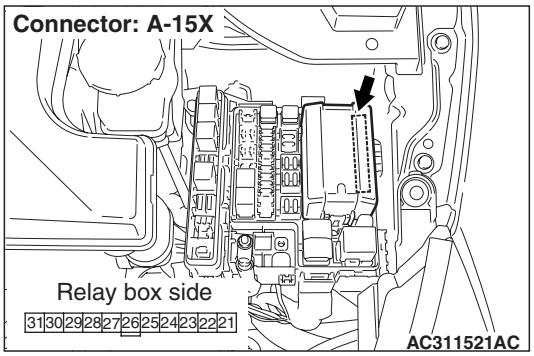

- Check the earth line for open or short circuit.

Q: Is the check result normal?
YES : Go to Step 6.
NO : Repair the wiring harness.

Step 6. Connector check: C-220 ETACS-ECU connector

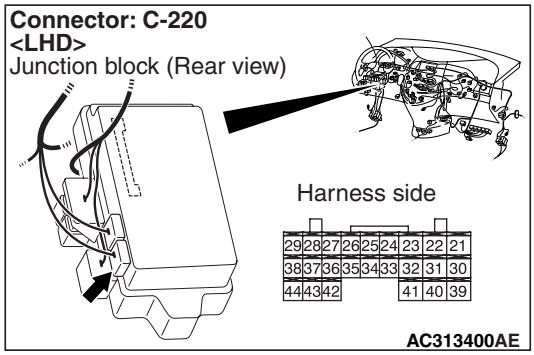

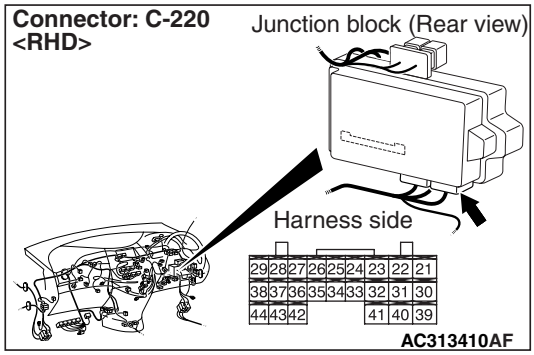

Q: Is the check result normal?
YES : Go to Step 7.
NO : Repair the connector.

Main Index
Group TOC

Step 7. Check the wiring harness between C-220 ETACS-ECU connector terminal No.23 and A-34 washer motor connector terminal No.2.

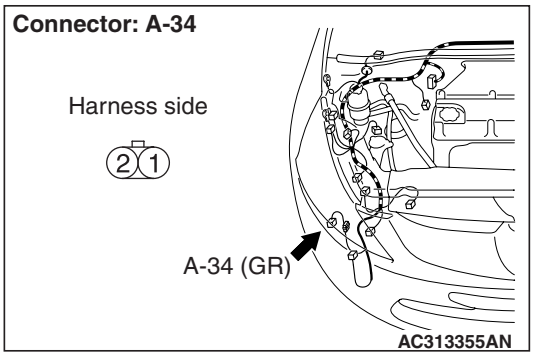

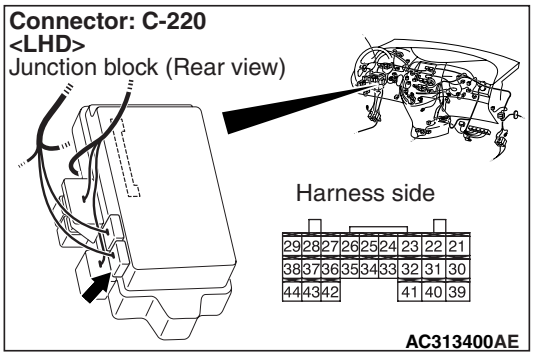

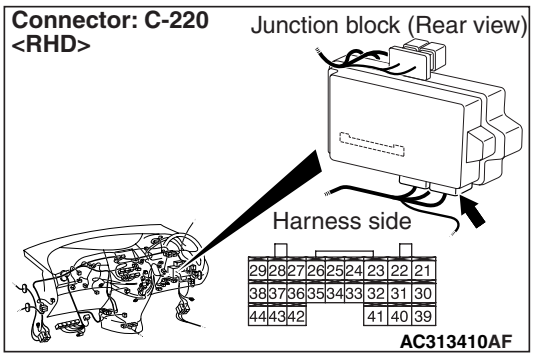

NOTE:

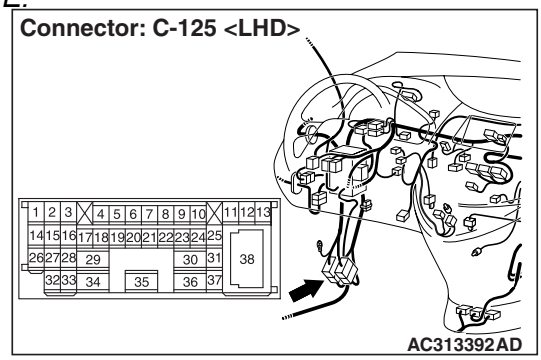

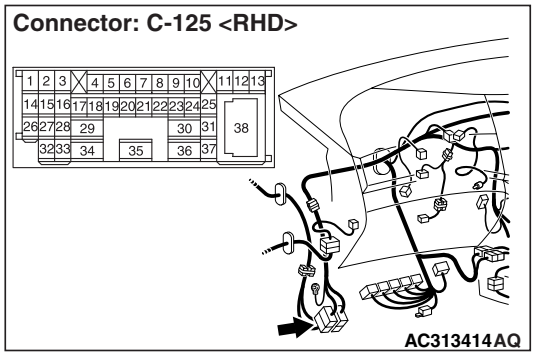

Prior to the wiring harness inspection, check intermediate connector C-125 and repair if necessary.

- Check the output signal line.

Q: Is the check result normal?

YES : Go to Step 8.

NO : Repair the wiring harness.

Step 8. Retest the system.

Check that the rear washer works normally.

Q: Is the check result normal?

YES : The trouble can be an intermittent malfunction (Refer to GROUP 00 – How to Cope with Intermittent Malfunction P.00-5).

NO : Replace the ETACS-ECU.

Main Index
Group TOC

ELECTRIC RETRACTABLE REMOTE CONTROLLED DOOR MIRROR

INSPECTION PROCEDURE I-1: Electric retractable remote controlled door mirror does not work at all.

⚠ CAUTION

Whenever the ECU is replaced, ensure that the input and output signal circuits are normal.

Door Mirror Relay Circuit

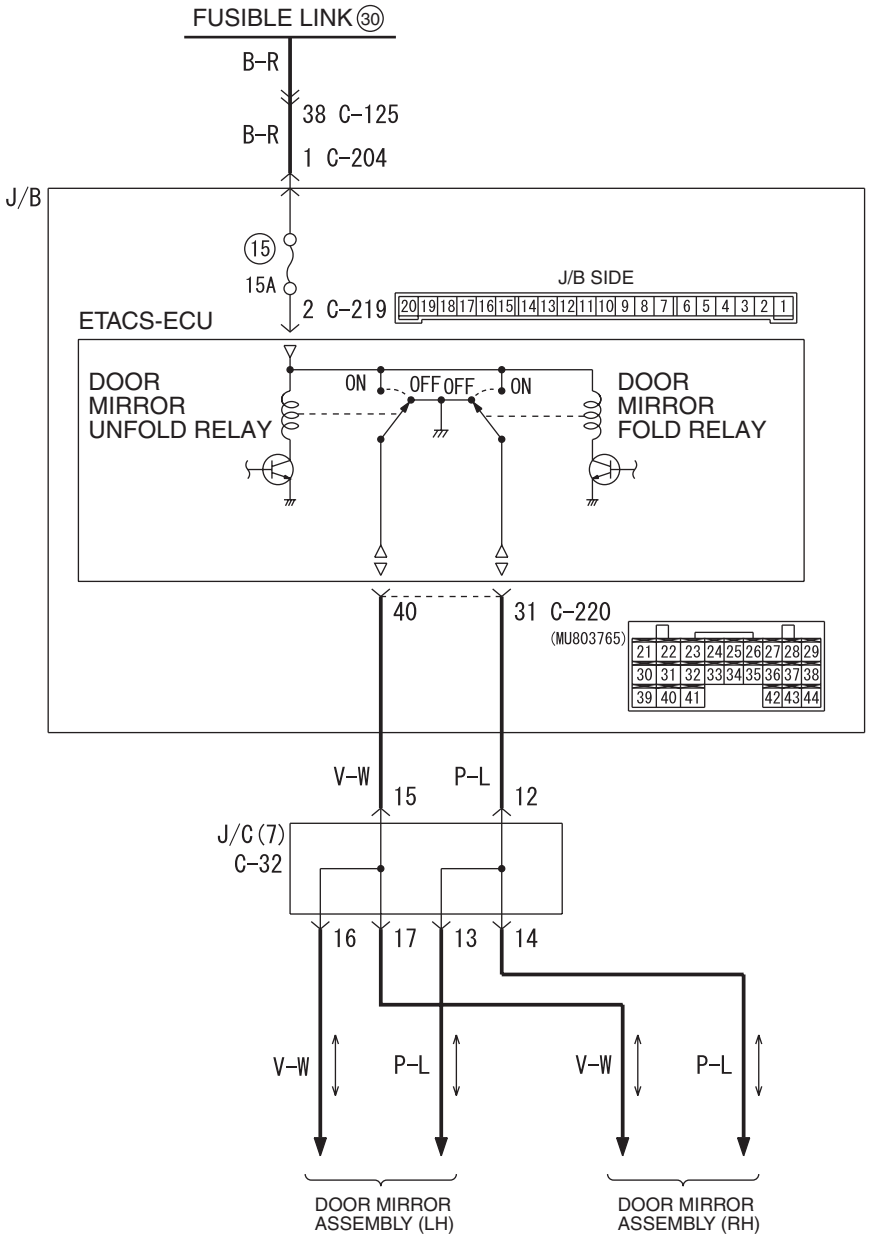

Wire colour code
B : Black LG : Light green G : Green L : Blue W : White Y : Yellow SB : Sky blue
BR : Brown O : Orange GR : Gray R : Red P : Pink V : Violet

W6X54E092A

Main Index
Group TOC

COMMENTS ON TROUBLE SYMPTOM

If the electric retractable remote controlled door mirror does not work at all, these power supply circuit(s), these earth circuit(s), remote controlled mirror switch or ETACS-ECU may be defective.

POSSIBLE CAUSES

- Malfunction of the remote controlled mirror switch
- Malfunction of ETACS-ECU
- Damaged harness wires and connectors

DIAGNOSTIC PROCEDURE

Step 1. Pulse check

Check the input signals below which are related to the electric retractable remote controlled door mirror.

System switch	Check conditions
Ignition switch (ACC)	When turned from the LOCK (OFF) position to the ACC position
Electric remote controlled mirror switch (folding/unfolding switch)	When the switch turned from off to on

OK: The M.U.T.-III sounds or the voltmeter needle fluctuates.

Q: Is the check result normal?

All the signals are received normally. : Go to Step 2.

The ignition switch (ACC) signal is not received. : Refer to inspection procedure P-1 "The ignition switch (ACC) signal is not received P.54B-319."

The electric remote controlled mirror switch (folding/unfolding switch) signal is not received. : Refer to inspection procedure P-19 "Signal is not received from the electric remote controlled mirror switch (folding/unfolding switch) P.54B-393."

Step 2. Connector check: C-219 ETACS-ECU connector

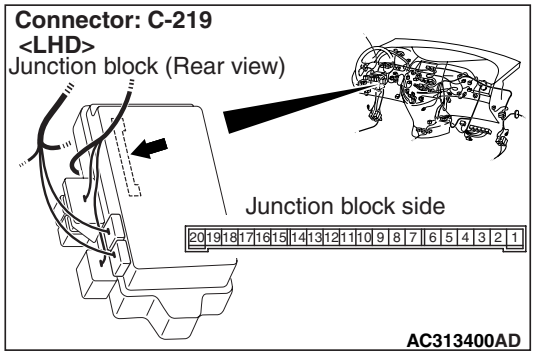

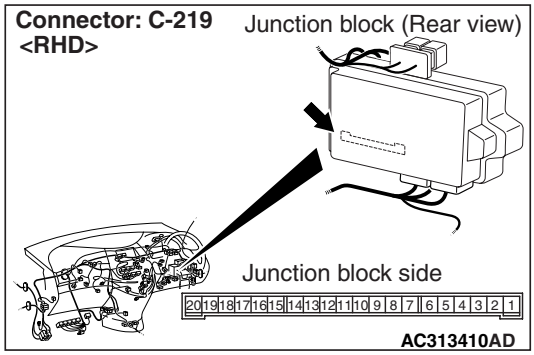

Q: Is the check result normal?

YES : Go to Step 3.

NO : Repair the connector.

Main Index
Group TOC

Step 3. Voltage measurement at the C-219 ETACS-ECU connector.

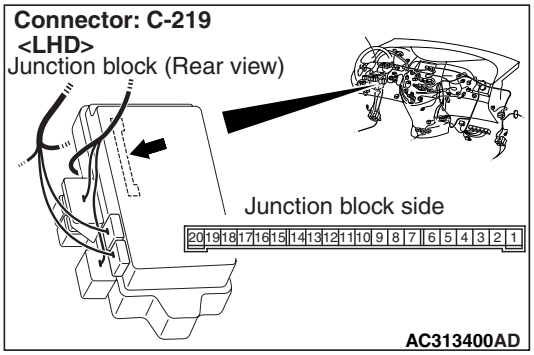

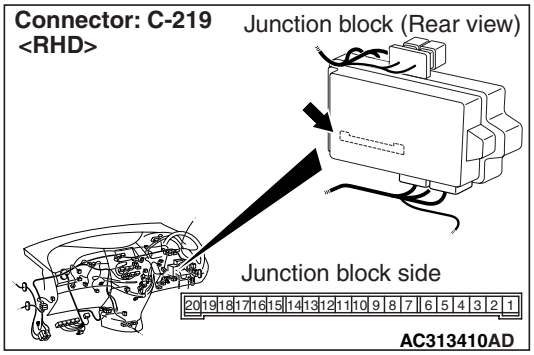

(1) Remove the ETACS-ECU, and measure at the junction block side.

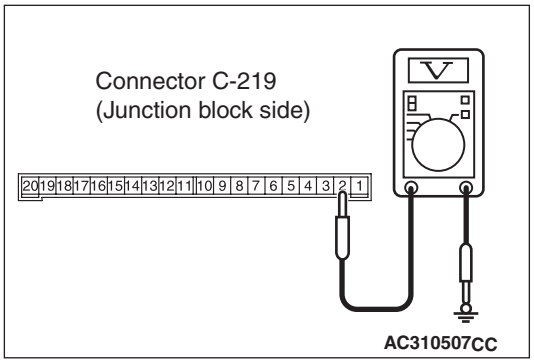

(2) Check the voltage between the C-219 ETACS-ECU connector terminal No.2 and body earth.

OK: System voltage

Q: Is the check result normal?

YES : Go to Step 5.

NO : Go to Step 4.

Step 4. Check the wiring harness between C-219 ETACS-ECU connector terminal No.2 and the fusible link (30).

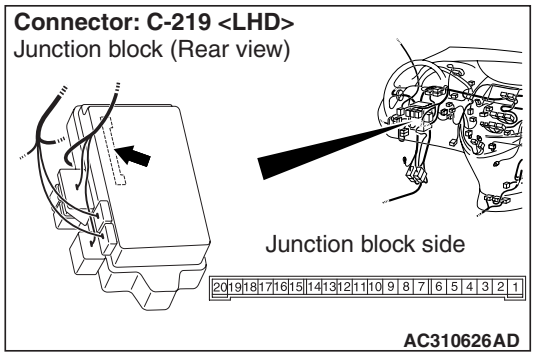

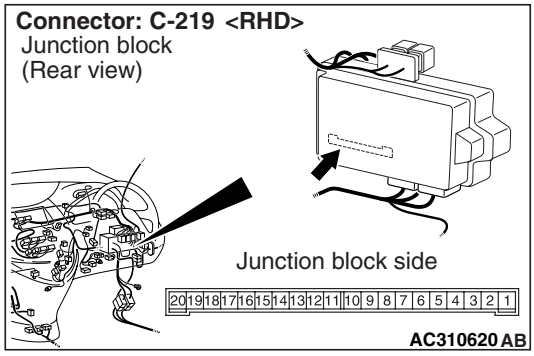

NOTE:

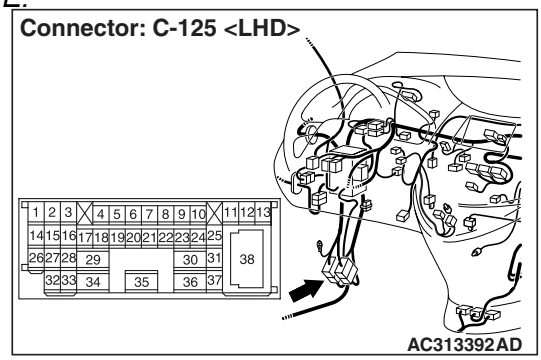

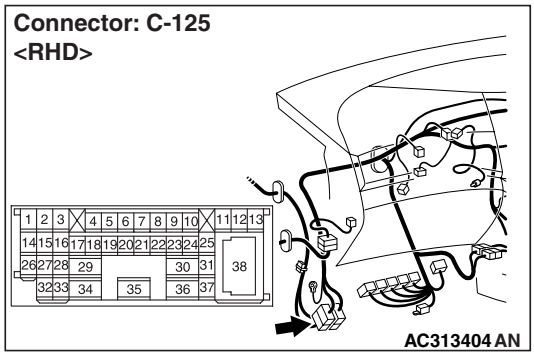

Main Index
Group TOC

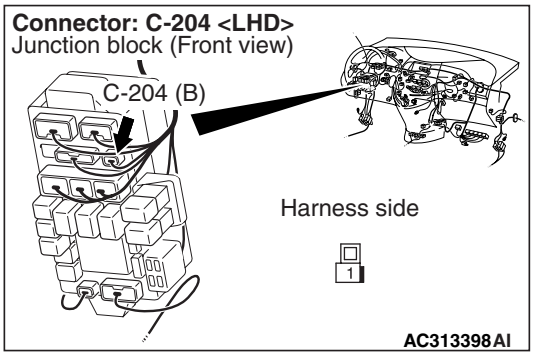

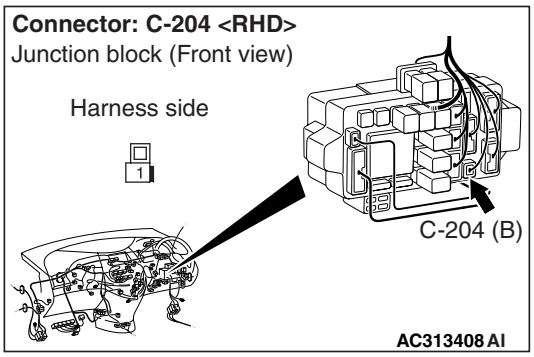

Prior to the wiring harness inspection, check intermediate connectors C-125 and junction block connector C-204, and repair if necessary.

- Check the power supply line to the battery for open circuit.

Q: Is the check result normal?

YES : . The trouble can be an intermittent malfunction (Refer to GROUP 00 – How to Cope with Intermittent Malfunction P.00-5).

NO : . Repair the wiring harness.

Step 5. Retest the system.

The electric retractable remote controlled mirror should now work normally at all.

Q: Is the check result normal?

YES : The trouble can be an intermittent malfunction (Refer to GROUP 00 – How to Cope with Intermittent Malfunction P.00-5).

NO : Replace the ETACS-ECU.

Main Index
Group TOC

INSPECTION PROCEDURE I-2: Left or right side electric retractable remote controlled door mirror does not work at all.

⚠ CAUTION

Whenever the ECU is replaced, ensure that the input and output signal circuits are normal.

Electric Retractable Remote Controlled Mirror Circuit

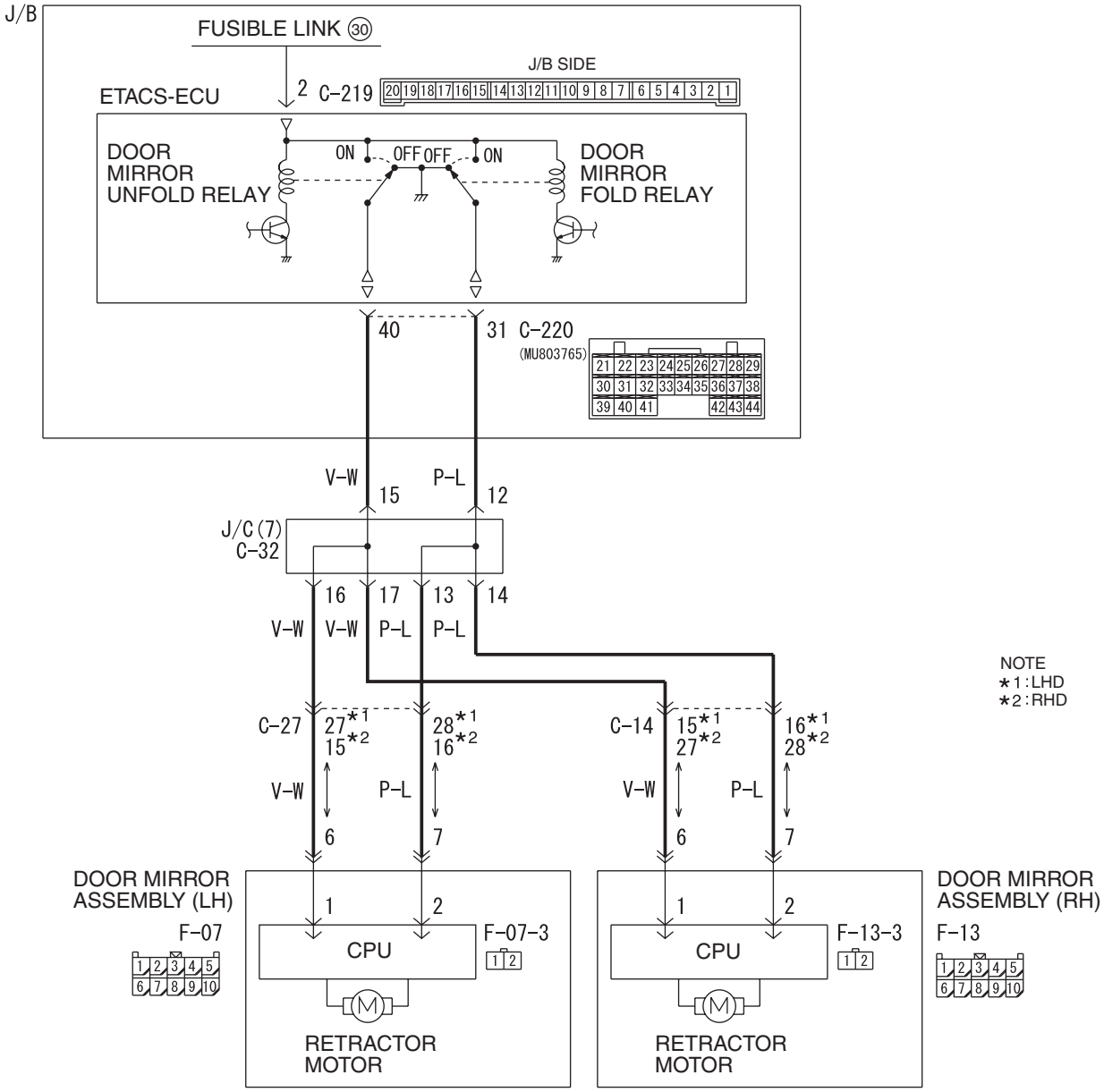

Wire colour code
B : Black LG : Light green G : Green L : Blue W : White Y : Yellow SB : Sky blue
BR : Brown O : Orange GR : Grey R : Red P : Pink V : Violet PU : Purple

W6X54X019A

Main Index
Group TOC

COMMENTS ON TROUBLE SYMPTOM

If left or right side electric retractable remote controlled door mirror does not work at all, electric retractable remote controlled door mirror may be defective.

POSSIBLE CAUSES

- Malfunction of the electric retractable remote controlled door mirror
- Damaged harness wires and connectors

DIAGNOSTIC PROCEDURE

Step 1. Confirm which door mirror is defective.

Q: Confirm which door mirror is defective.
LH : Go to Step 2.
RH : Go to Step 9.

Step 2. Connectors check: F-07 door mirror assembly (LH) connectors

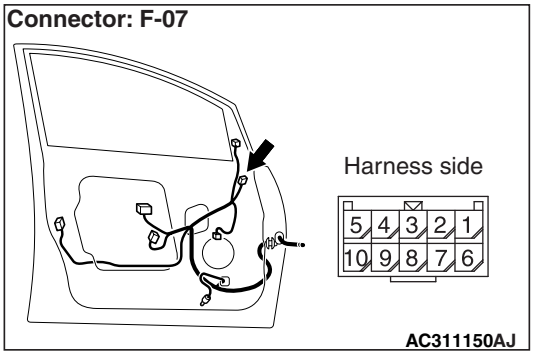

Q: Is the check result normal?
YES : Go to Step 3.
NO : Repair the connector.

Step 3. Check the door mirror assembly (LH).

Check that the electric folding outside rear-view mirror (LH) works normally. Refer to GROUP 51 – Door mirror P.51-38.

Q: Is the check result normal?
YES : Go to Step 7.
NO : Go to Step 4.

Step 4. Connectors check: F-07-3 retractor motor (LH) connectors

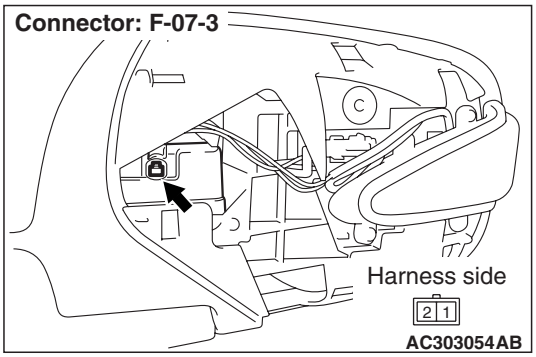

Q: Is the check result normal?
YES : Go to Step 5.
NO : Repair the connector.

Step 5. Check the retractor motor (LH).

Check that the electric folding outside rear-view mirror (LH) works normally. Refer to GROUP 51 – Door mirror P.51-38.

Q: Is the check result normal?
YES : Go to Step 6.
NO : Replace the retractor motor (LH).

Step 6. Check the wiring harness between F-07-3 retractor motor (LH) connector terminal Nos.1, 2 and F-07 door mirror assembly (LH) connector terminal Nos.7, 6.

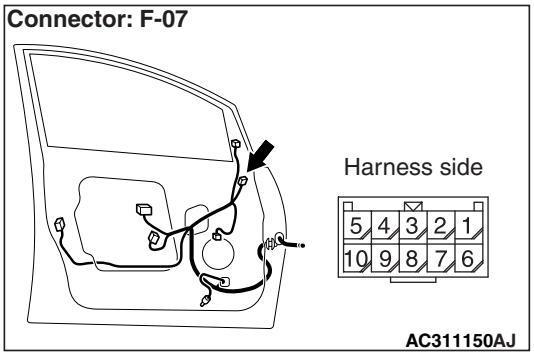

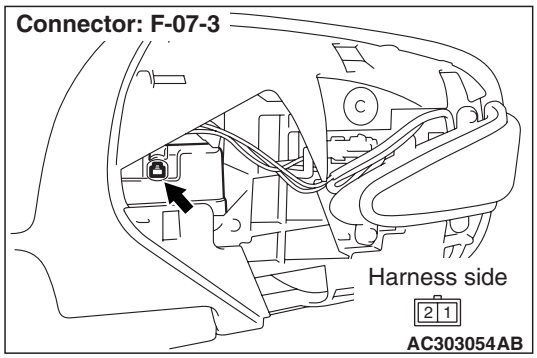

- Check the input and output signal line for open circuit.

Q: Is the check result normal?
YES : Replace the door mirror assembly (LH).
NO : Repair the wiring harness.

Step 7. Connector check: C-220 ETACS-ECU connector

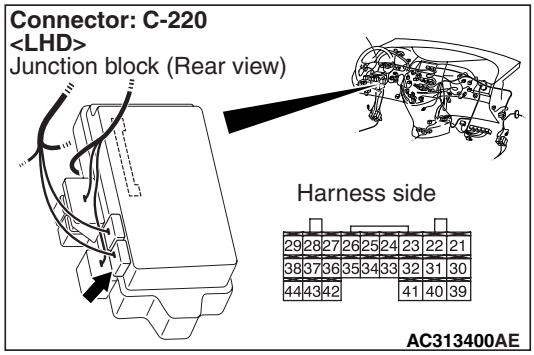

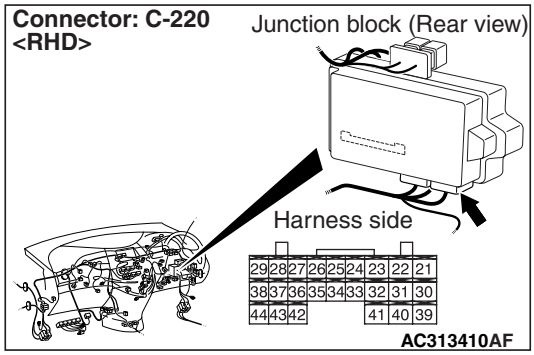

Q: Is the check result normal?
YES : Go to Step 8.
NO : Repair the connector.

Main Index
Group TOC

Step 8. Check the wiring harness between C-220 ETACS-ECU connector terminal Nos.31, 40 and F-07 door mirror assembly (LH) connector terminal Nos.7, 6.

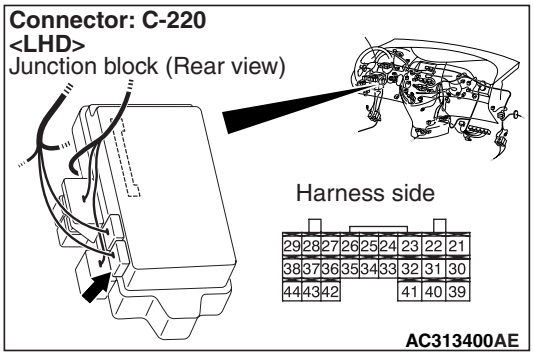

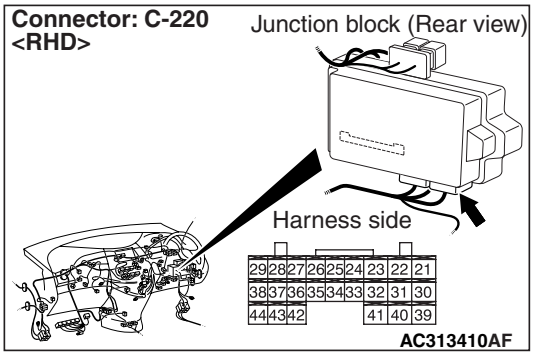

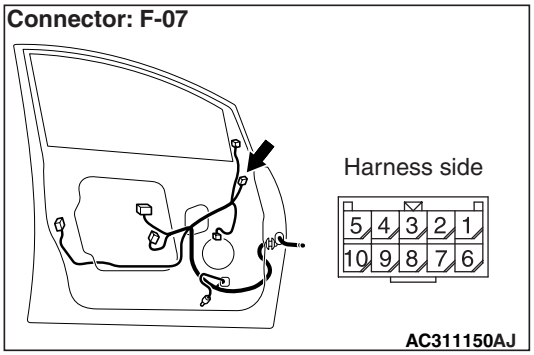

NOTE:

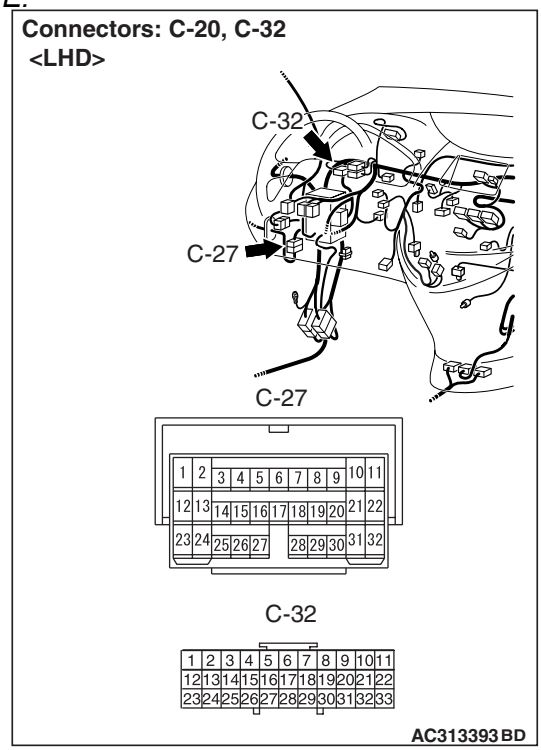

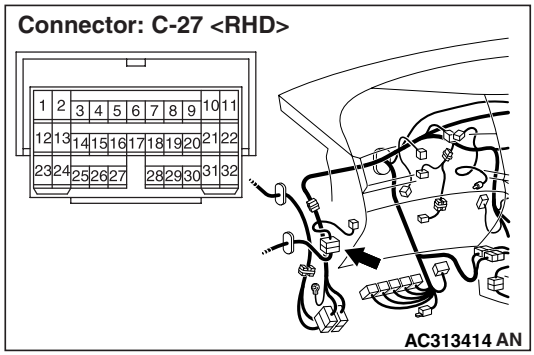

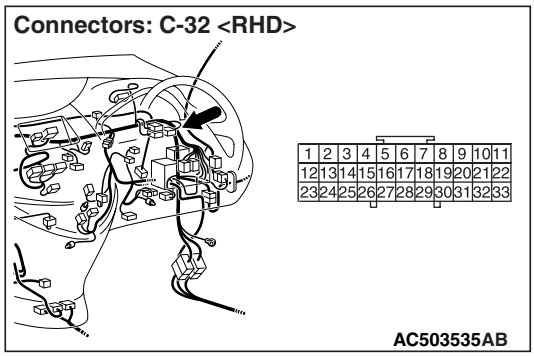

Prior to the wiring harness inspection, check intermediate connector C-27 and junction block connector C-32, and repair if necessary.

- Check the input and output signal line for open circuit.

Q: Is the check result normal?

YES : Go to Step 16.

NO : Repair the wiring harness.

Main Index
Group TOC

Step 9. Connectors check: F-13 door mirror assembly (RH) connectors

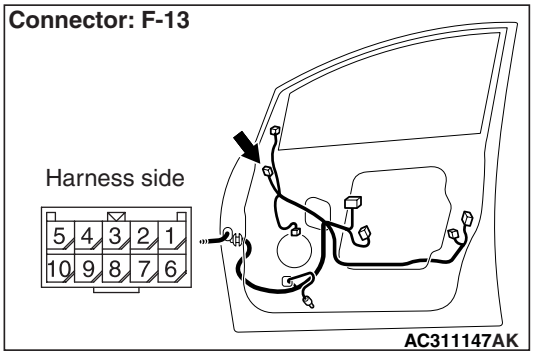

Q: Is the check result normal?
YES : Go to Step 10.
NO : Repair the connector.

Step 10. Check the door mirror assembly (RH).
Check that the electric folding outside rear-view mirror (RH) works normally. Refer to GROUP 51 – Door mirror P.51-38.

Q: Is the check result normal?
YES : Go to Step 14.
NO : Go to Step 11.

Step 11. Connectors check: F-13-3 retractor motor (RH) connectors

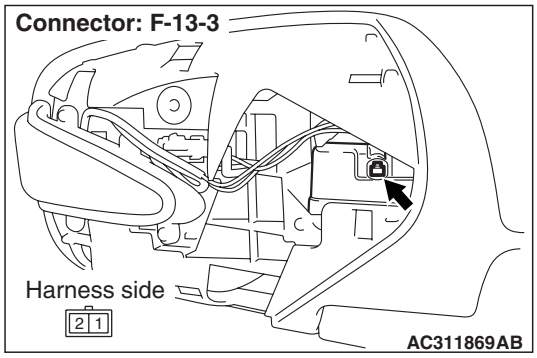

Q: Is the check result normal?
YES : Go to Step 12.
NO : Repair the connector.

Step 12. Check the retractor motor (RH).
Check that the electric folding outside rear-view mirror (RH) works normally. Refer to GROUP 51 – Door mirror P.51-38.

Q: Is the check result normal?
YES : Go to Step 13.
NO : Replace the retractor motor (RH).

Step 13. Check the wiring harness between F-13-3 retractor motor (RH) connector terminal Nos.1, 2 and F-13 door mirror assembly (RH) connector terminal Nos.7, 6.

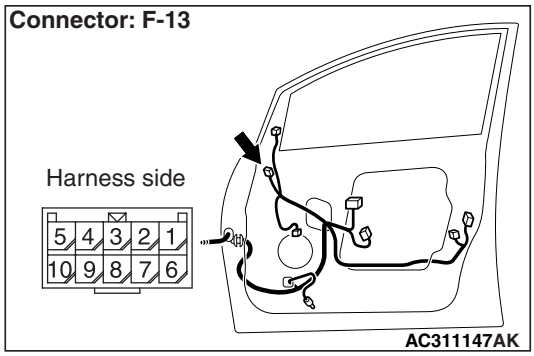

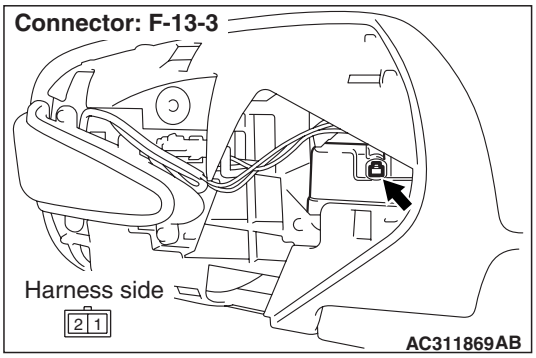

- Check the input and output signal line for open circuit.

Q: Is the check result normal?
YES : Replace the door mirror assembly (RH).
NO : Repair the wiring harness.

Main Index
Group TOC

Step 14. Connector check: C-220 ETACS-ECU connector

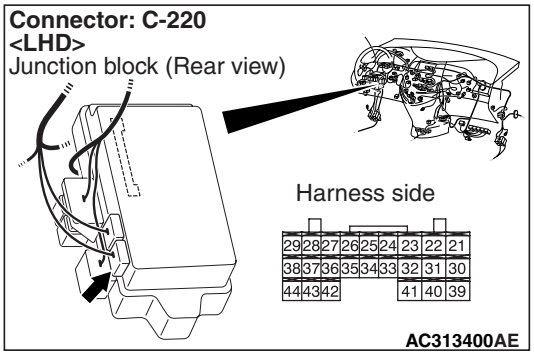

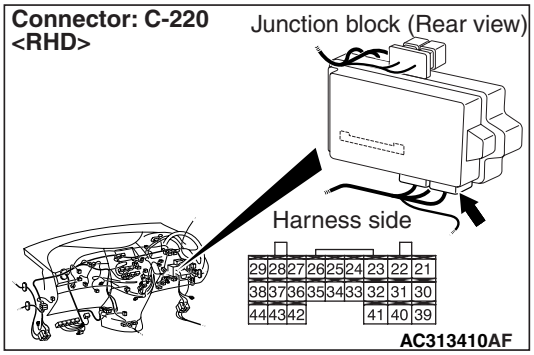

Q: Is the check result normal?

YES : Go to Step 15.

NO : Repair the connector.

Step 15. Check the wiring harness between C-220 ETACS-ECU connector terminal Nos.31, 40 and F-13 door mirror assembly (RH) connector terminal Nos.7, 6.

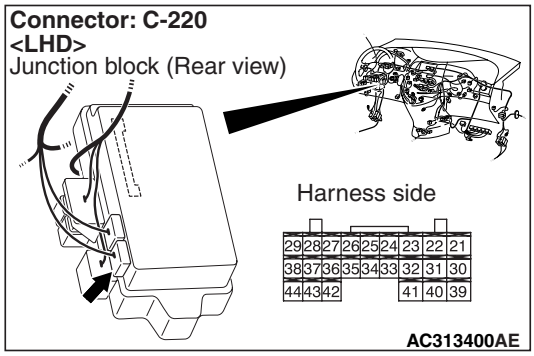

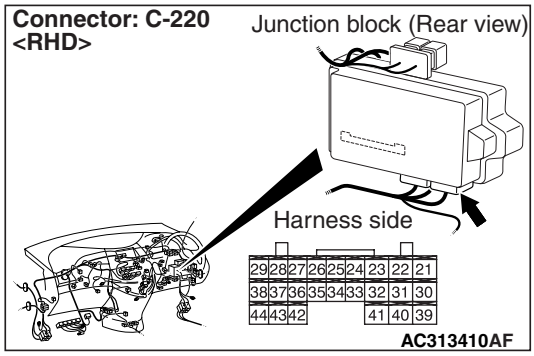

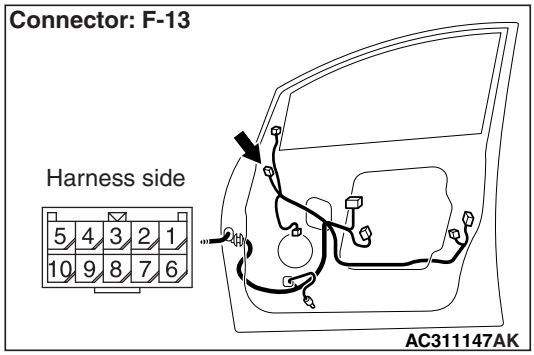

NOTE:

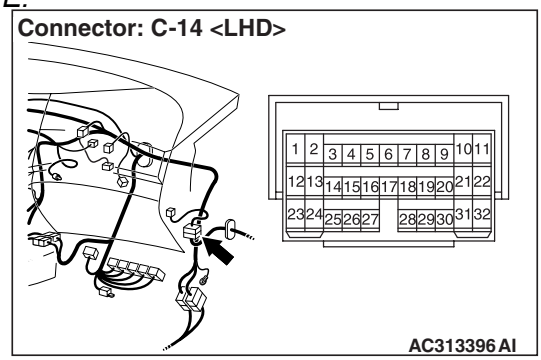

Main Index
Group TOC

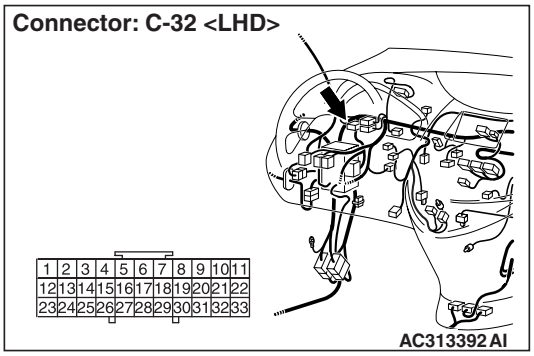

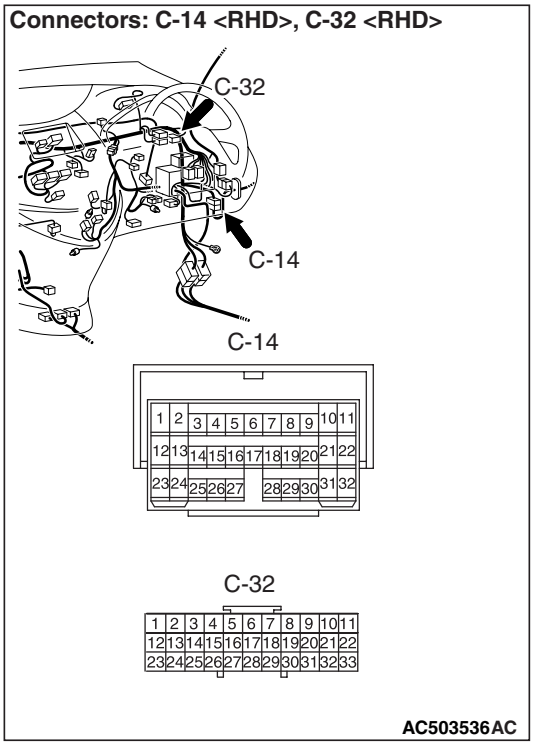

Prior to the wiring harness inspection, check intermediate connector C-14 and junction block connector C-32, and repair if necessary.

- Check the input and output signal line for open circuit.

Q: Is the check result normal?

YES : . Go to Step 16.

NO : . Repair the wiring harness.

Step16. Retest the system.

Check that the electric retractable remote controlled mirror works normally.

Q: Is the check result normal?

YES : The trouble can be an intermittent malfunction (Refer to GROUP 00 – How to Cope with Intermittent Malfunction P.00-5).

NO : Replace the ETACS-ECU.

INSPECTION PROCEDURE I-3: Electric retractable remote controlled door mirror timer function does not at all.

⚠ CAUTION

Whenever the ECU is replaced, ensure that the input and output signal circuits are normal.

COMMENTS ON TROUBLE SYMPTOM

If the door mirror can be folded and unfolded with the remote controlled mirror switch (fold/unfold switch), the ETACS-ECU may be defective.

POSSIBLE CAUSES

- Malfunction of the driver's door switch
- Malfunction of the ETACS-ECU
- Damaged harness wires and connectors

Main Index
Group TOC

DIAGNOSTIC PROCEDURE

Step 1. Check the electric folding door mirrors operation.
Check that the door mirror is folded and unfolded with the remote controlled mirror switch when the ignition switch is at ACC position.

Q: Is the check result normal?
YES : Go to Step 2.
NO : Refer to inspection procedure I-1 "Electric retractable remote controlled door mirror does not work at all P.54B-213."

Step 2. Pulse check
Check the input signals below which are related to the electric retractable remote controlled door mirror timer function.

System switch	Check conditions
Ignition switch (ACC)	When turned from the LOCK (OFF) position to the ACC position
Driver's door switch	When the driver's door is opened

OK: The M.U.T.-III sounds or the voltmeter needle fluctuates.

Q: Is the check result normal?
All the signals are received normally. : Go to Step 3.
The ignition switch (ACC) signal is not received. : Refer to inspection procedure P-1 "The ignition switch (ACC) signal is not received P.54B-319."
The driver's door switch signal is not received. : Refer to inspection procedure P-5 "The driver's door switch signal is not received P.54B-333 <L.H. drive vehicles> or P.54B-335 <R.H. drive vehicles>."

Step 3. Retest the system.
Check that the electric-folding door mirror timer function works normally.

Q: Is the check result normal?
YES : The trouble can be an intermittent malfunction (Refer to GROUP 00 – How to Cope with Intermittent Malfunction P.00-5).
NO : Replace the ETACS-ECU.

INSPECTION PROCEDURE I-4: Vehicle speed-dependent unfolding function does not work normally.

⚠ CAUTION
Whenever the ECU is replaced, ensure that the input and output signal circuits are normal.

Vehicle Speed-Dependent Unfolding Function

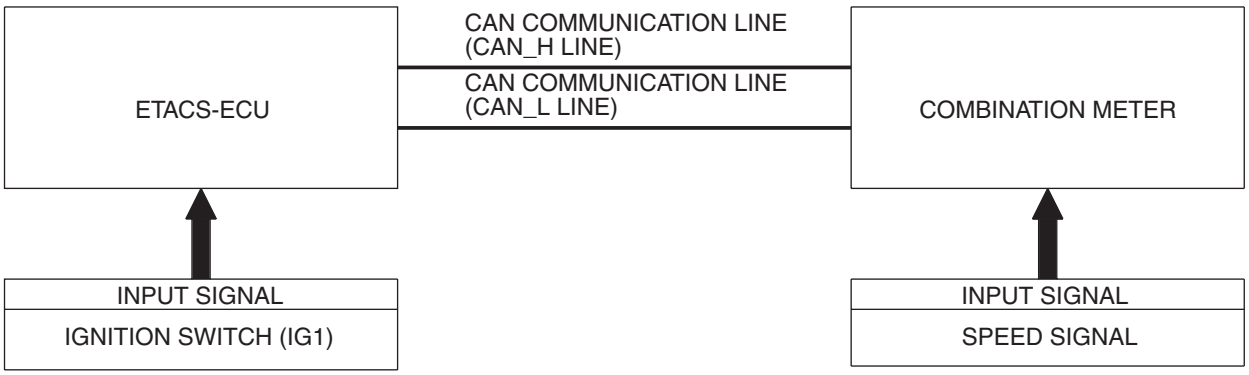

W4X54E103A

Main Index
Group TOC

COMMENTS ON TROUBLE SYMPTOM

The ETACS-ECU operates this function in accordance with the input signals below.

- Ignition switch (IG1)
- Vehicle speed signal

If this function does not work normally, these input signal circuit(s) or the ETACS-ECU may be defective. In addition, it is possible that the function except the vehicle speed-dependent unfolding function has been set by using the customized function.

POSSIBLE CAUSES

- The CAN bus line is defective.
- Malfunction of ETACS-ECU
- Damaged harness wires and connectors

DIAGNOSTIC PROCEDURE

Step 1. Pulse check

Check the input signals below which are related to the electric retractable remote controlled door mirror vehicle speed-dependent unfolding function.

System switch	Check condition
Ignition switch (IG1)	When turned from ACC to ON
Vehicle speed signal	When the vehicle speed has reached 10 km/h or more.

OK: The M.U.T.-III sounds or the voltmeter needle fluctuates.

Q: Is the check result normal?

All the signals are received normally. : . Go to Step 2.

The ignition switch (IG1) signal is not received. : . Refer to inspection procedure P-2 "The ignition switch (IG1) signal is not received P.54B-322."

The vehicle speed signal is not received. : . Refer to inspection procedure P-23 "The vehicle speed signal is not received P.54B-408."

Step 2. Check the SWS monitor customized function.

Check that "WING MIRROR" is set to "SPEED SEN FUN" by using the customized function.

⚠ CAUTION

The SWS monitor must be used in order to confirm and change that setting. Use the SWS monitor to confirm and/or change the customized function.

Q: Is the check result normal?

YES : Go to Step 3.

NO : Set "WING MIRROR" to "SPEED SEN FUN" by using the customized function (Refer to GROUP 54C – Customize adjustment P.54C-432)

Step 3. Retest the system.

The vehicle speed-dependent unfolding function should now work normally.

Q: Is the check result normal?

YES : The trouble can be an intermittent malfunction (Refer to GROUP 00 – How to Cope with Intermittent Malfunction P.00-5).

NO : Replace the ETACS-ECU.

Main Index
Group TOC

IGNITION KEY CYLINDER ILLUMINATION LAMP

INSPECTION PROCEDURE J-1: The ignition key cylinder illumination lamp does not illuminate/extinguish normally.

⚠ CAUTION
Whenever the ECU is replaced, ensure that the input and output signal circuits are normal.

Ignition Key Cylinder Illumination Lamp Circuit

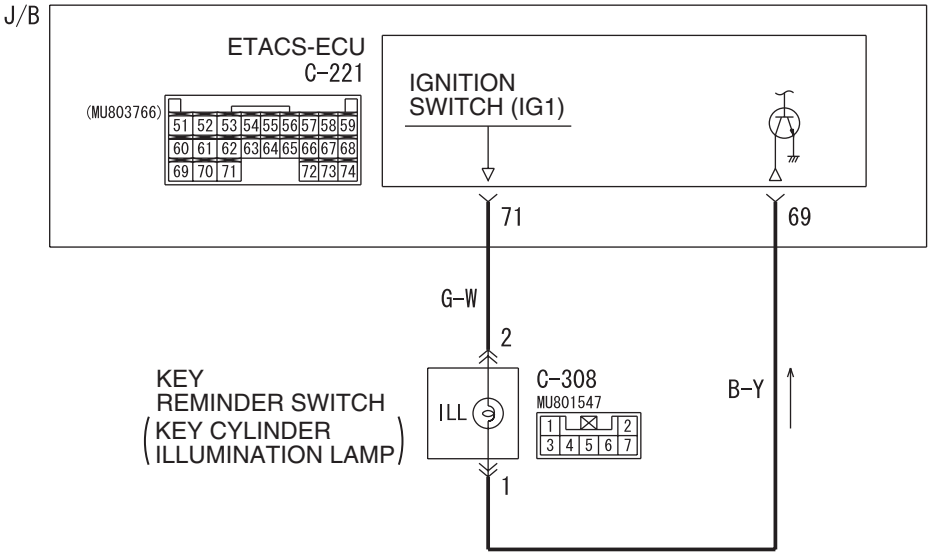

Wire colour code
B : Black LG : Light green G : Green L : Blue W : White Y : Yellow SB : Sky blue
BR : Brown O : Orange GR : Gray R : Red P : Pink V : Violet

W4X54E168A

COMMENTS ON TROUBLE SYMPTOM

The ETACS-ECU operates this function in accordance with the input signals below.

<Vehicles without keyless entry system>
- Ignition switch (IG1)
- Driver's door switch

<Vehicles with keyless entry system>
- Ignition switch (IG1)
- Key reminder switch
- Driver's door switch
- Interior lamp loaded signal

If this function does not work normally, these input signal circuit(s), the ignition key cylinder illumination lamp or the ETACS-ECU may be defective.

POSSIBLE CAUSES

- Malfunction of the key reminder switch
- Malfunction of the driver's door switch
- Malfunction of the ignition key cylinder illumination lamp
- Malfunction of the ETACS-ECU
- Damaged harness wires and connectors

Main Index
Group TOC

DIAGNOSTIC PROCEDURE

Step 1. Check the operation of the interior lamp.
Check that the interior lamp illuminate and extinguish normally.

Q: Is the check result normal?
YES : Go to Step 2.
NO : Refer to inspection procedure O-1 "The interior lamps (room ramp, rear personal lamps, door lamps, luggage compartment lamp, key illumination lamp) does not illuminate or extinguish normally P.54B-282."

Step 2. Pulse check
Check the input signals below, which are related to the ignition key cylinder illumination lamp.

System switch	Check condition
Ignition switch (IG1)	When turned from ACC to ON
Key reminder switch*	When the inserted ignition key is pulled out
Driver's door switch	When the driver's door is opened

*NOTE: *: Vehicles with keyless entry system*

OK: The M.U.T.-III sounds or the voltmeter needle fluctuates.

Q: Are the check result normal?
All the signals are received normally. : Go to Step 3.
The ignition switch (IG1) signal is not received. : Refer to inspection procedure P-2 "The ignition switch (IG1) signal is not received P.54B-322."
The key reminder switch signal is not received. : Refer to inspection procedure P-10 "The key reminder switch signal is not received P.54B-350."
The driver's door switch signal is not received. : Refer to inspection procedure P-5 "The driver's door switch signal is not received <LH drive vehicles>P.54B-333 or <RH drive vehicles>P.54B-335 ."

Step 3. Connector check: C-308 key reminder switch connector

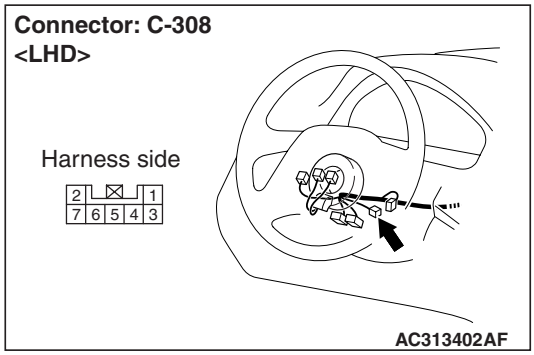

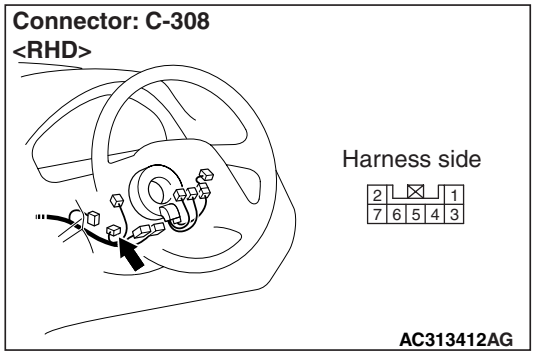

Q: Is the check result normal?
YES : Go to Step 4.
NO : Repair the defective connector.

Step 4. Check the bulb of the ignition key cylinder illumination lamp.
Check the bulb of the ignition key cylinder illumination lamp.

Q: Is the check result normal?
YES : Go to Step 5.
NO : Replace the bulb of the ignition key cylinder illumination lamp.

Main Index
Group TOC

Step 5. Connector check: C-221 ETACS-ECU connector

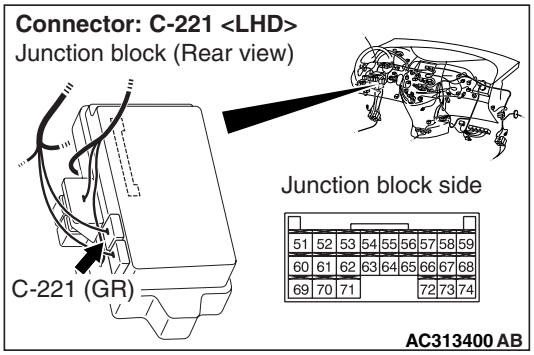

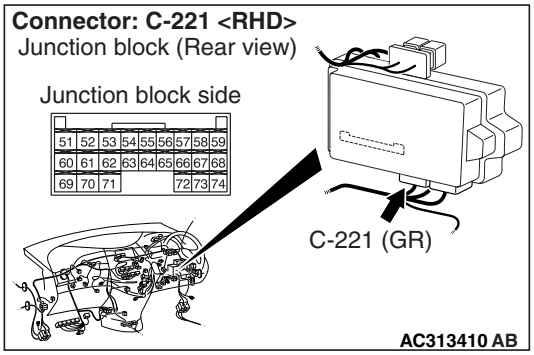

Q: Is the check result normal?
YES : Go to Step 6.
NO : Repair the defective connector.

Step 6. Check the wiring harness from C-221 ETACS-ECU connector terminal Nos.69 and 71 to C-308 ignition key cylinder illumination lamp connector terminal Nos.1 and 2.

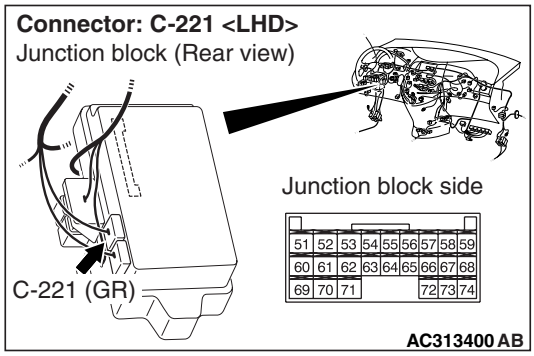

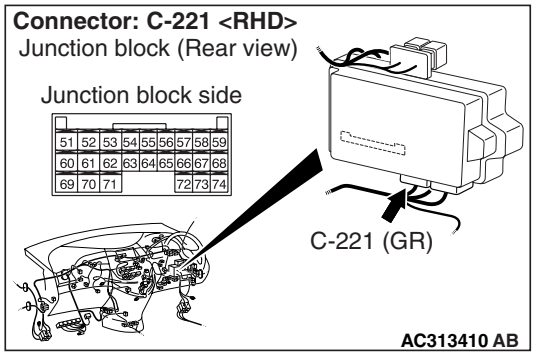

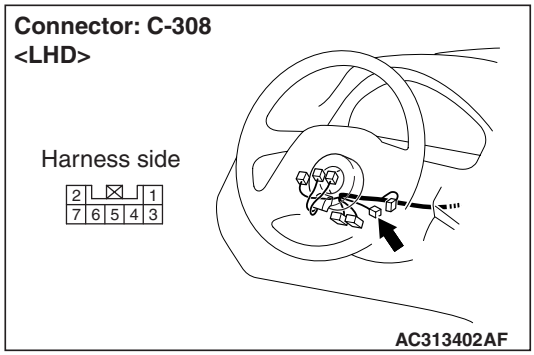

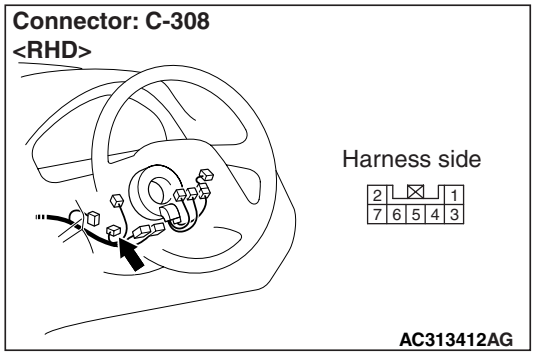

- Check the input and output lines for open circuit.

Q: Is the check result normal?
YES : Go to Step 7.
NO : Repair the wiring harness.

Main Index
Group TOC

Step 7. Retest the system.
Check that the ignition key cylinder illumination lamp illuminates/extinguishes normally.

Q: Is the check result normal?
YES : . The trouble can be an intermittent malfunction (Refer to GROUP 00 – How to Cope with Intermittent Malfunction P.00-5).
NO : . Replace the ETACS-ECU.

SEAT BELT WARNING LAMP

INSPECTION PROCEDURE K-1: The seat belt warning lamp does not flash normally. <Vehicles for GCC>

⚠ CAUTION
Whenever the ECU is replaced, ensure that the input and output signal circuits are normal.

Seat Belt Warning Lamp Function

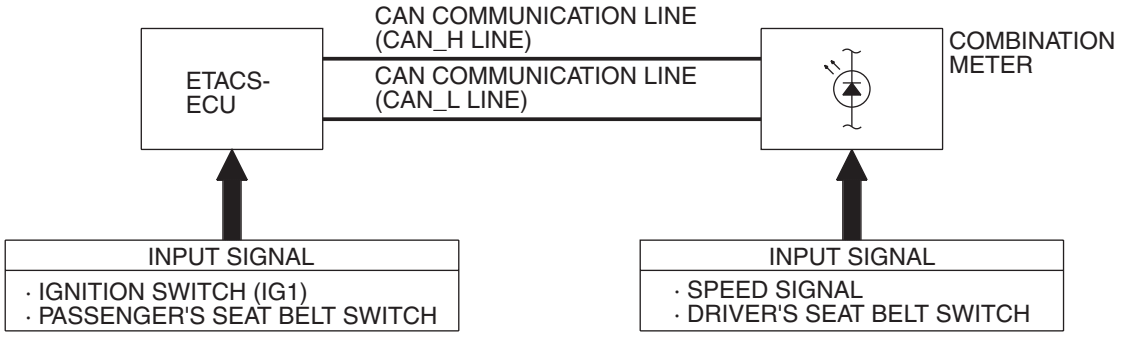

W4X54E167A

COMMENTS ON TROUBLE SYMPTOM
The ETACS-ECU flashes the seat belt warning lamp in accordance with the input signal from the ignition switch (IG1).
If it does not flash normally, these input signal circuit(s) or the ETACS-ECU may be defective.

POSSIBLE CAUSES
- Malfunction of the ETACS-ECU
- Damaged harness wires and connectors

DIAGNOSTIC PROCEDURE

Step 1. Check the diagnosis code.
When the ignition switch is turned to the LOCK (OFF) position, check that the ETACS-ECU does not set the diagnosis code.

Q: Is the diagnosis code set?
YES : Refer to diagnosis code chart P.54B-26.
NO : Go to Step 2.

Main Index
Group TOC

Step 2. Pulse check

Check the input signals, which are related to the seat belt warning lamp.

System switch	Check condition
Ignition switch (IG1)	When turned from ACC to ON
Driver's seat belt switch	ON
Vehicle speed signal	When the vehicle speed has reached 10 km/h or more.

OK: The M.U.T.-III sounds or the voltmeter needle fluctuates.

Q: Are the check result normal?

All the signals are received normally. : Go to Step 3.

The ignition switch (IG1) signal is not received. : Refer to inspection procedure P-2 "The ignition switch (IG1) signal is not received P.54B-322."

Driver's seat belt switch signal is not received : Refer to inspection procedure P-17 "The driver's seat belt switch signal is not received <LH drive vehicles>P.54B-384 or <RH drive vehicles>P.54B-387 ."

Vehicle speed signal is not received : Refer to inspection procedure P-23 "The vehicle speed signal is not received P.54B-408."

Step 3. Retest the system.

Check that the seat belt warning lamp work normally.

Q: Is the check result normal?

YES : The trouble can be an intermittent malfunction (Refer to GROUP 00 – How to Cope with Intermittent Malfunction P.00-5).

NO : Replace the ETACS-ECU.

Main Index
Group TOC

INSPECTION PROCEDURE K-1: The seat belt warning lamp does not flash normally. <Vehicles for Australia and New Zealand>

⚠ CAUTION
Whenever the ECU is replaced, ensure that the input and output signal circuits are normal.

Seat Belt Warning Lamp Function

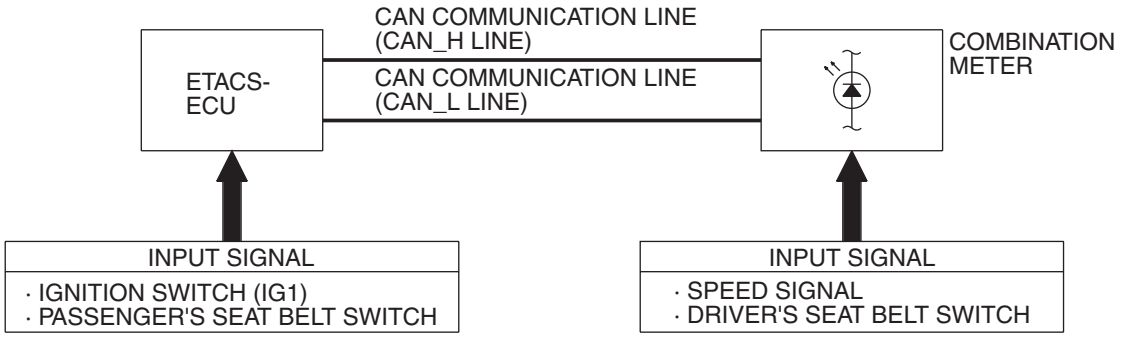

W4X54E167A

COMMENTS ON TROUBLE SYMPTOM

The ETACS-ECU flashes the seat belt warning lamp in accordance with the input signal from the ignition switch (IG1).
If it does not flash normally, these input signal circuit(s) or the ETACS-ECU may be defective.

POSSIBLE CAUSES

- Malfunction of the ETACS-ECU
- Damaged harness wires and connectors

DIAGNOSTIC PROCEDURE

Step 1. Check the diagnosis code.

When the ignition switch is turned to the LOCK (OFF) position, check that the ETACS-ECU does not set the diagnosis code.

Q: Is the diagnosis code set?
YES : Refer to diagnosis code chart P.54B-26.
NO : Go to Step 2.

Step 2. Check the seat belt switch, where the seat belt warning lamp does not function normally.

Q: Which seat belt switch does not activate the seat belt warning lamp?
Driver's seat belt : Go to Step 3
Passenger's seat belt : Go to Step 4.

Step 3. Pulse check

Check the input signals, which are related to the seat belt warning lamp.

System switch	Check condition
Ignition switch (IG1)	When turned from ACC to ON
Driver’s seat belt switch	ON

OK: The M.U.T.-III sounds or the voltmeter needle fluctuates.

Q: Are the check result normal?
All the signals are received normally. : Go to Step 5.
The ignition switch (IG1) signal is not received. : Refer to inspection procedure P-2 "The ignition switch (IG1) signal is not received P.54B-322."
Driver’s seat belt switch signal is not received : Refer to inspection procedure P-17 "The driver's seat belt switch signal is not received <RH drive vehicles>P.54B-387 ."

Main Index
Group TOC

Step 4. Pulse check

Check the input signals, which are related to the seat belt warning lamp.

System switch	Check condition
Ignition switch (IG1)	When turned from ACC to ON
Passenger's seat belt switch and seat occupancy sensor	ON

OK: The M.U.T.-III sounds or the voltmeter needle fluctuates.

Q: Are the check result normal?

All the signals are received normally. : Go to Step 5.

The ignition switch (IG1) signal is not received. : Refer to inspection procedure P-2 "The ignition switch (IG1) signal is not received P.54B-322."

Passenger's seat belt switch signal is not received : Refer to inspection procedure P-18 "The passenger's seat belt switch is not received <Vehicles for Australia and New Zealand>P.54B-390 ."

Step 5. Pulse check

Check the input signals below which are related to the seat belt warning lamp.

System switch	Check condition
Vehicle speed signal	When the vehicle speed has reached 10 km/h or more.

OK: The M.U.T.-III sounds or the voltmeter needle fluctuates.

Q: Is the check result normal?

YES : Go to Step 6.

NO : Refer to inspection procedure P-23 "The vehicle speed signal is not received P.54B-408."

Step 6. Retest the system.

Check that the seat belt warning lamp work normally.

Q: Is the check result normal?

YES : The trouble can be an intermittent malfunction (Refer to GROUP 00 – How to Cope with Intermittent Malfunction P.00-5).

NO : Replace the ETACS-ECU.

Main Index
Group TOC

HEADLAMP AND TAIL LAMP

INSPECTION PROCEDURE L-1: The tail/stop lamps do not illuminate normally.

⚠ CAUTION

Whenever the ECU is replaced, ensure that the input and output signal circuits are normal.

Tail Lamp Relay Circuit

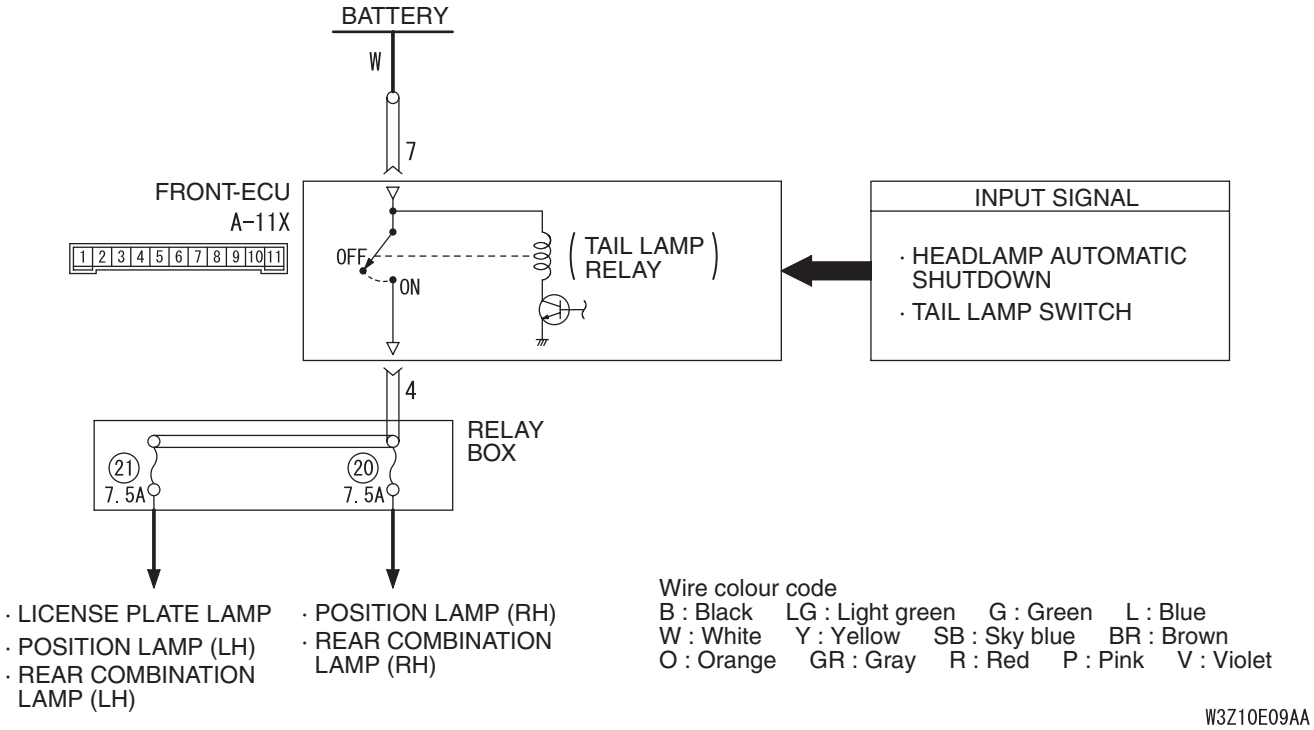

COMMENTS ON TROUBLE SYMPTOM

If all the tail/stop lamps do not illuminate, the tail lamp switch input circuit or the front-ECU may be defective.

POSSIBLE CAUSES

- Malfunction of the column switch
- Malfunction of the front-ECU
- Damaged harness wires and connectors

Main Index
Group TOC

DIAGNOSTIC PROCEDURE

Step 1. Pulse check

Check the input signal from the tail lamp switch.

System switch	Check condition
Ignition switch (IG1)	When turned from ACC to ON
Tail lamp switch	When the lighting switch is turned to the TAIL position

OK: The M.U.T.-III sounds or the voltmeter needle fluctuates.

Q: Is the check result normal?

All the signals are received normally. : Go to Step 2.

The ignition switch (IG1) signal is not received. : Refer to inspection procedure P-2 "The ignition switch (IG1) signal is not received P.54B-322."

The tail lamp switch signal is not received. : Refer to inspection procedure P-6 "The column switch (lighting and turn-signal lamp switch) signal is not received P.54B-337."

Step 2. Connector check: A-14X front-ECU connector

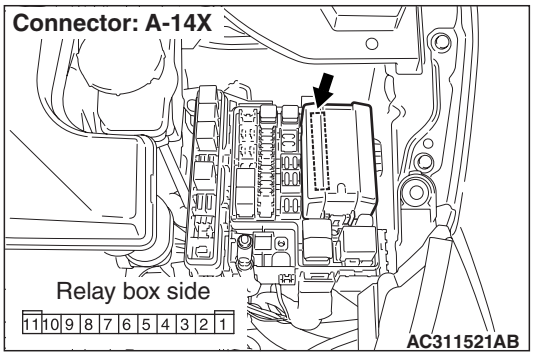

Q: Is the check result normal?

YES : Go to Step 3.

NO : Repair the defective connector.

Step 3. Voltage measurement at A-14X front-ECU connector.

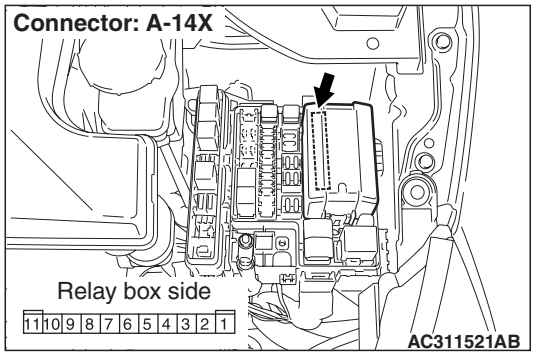

(1) Remove the front-ECU, and measure at the relay box side.

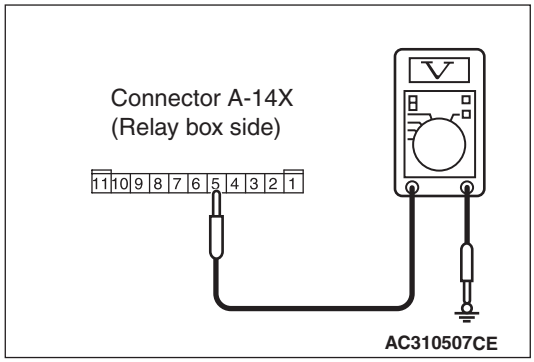

(2) Voltage between A-14X front-ECU connector terminal No.5 and body earth

OK: System voltage

Q: Is the check result normal?

YES : Go to Step 5.

NO : Go to Step 4.

Step 4. Check the wiring harness between A-14X front-ECU connector terminal No.5 and the fusible link (26).

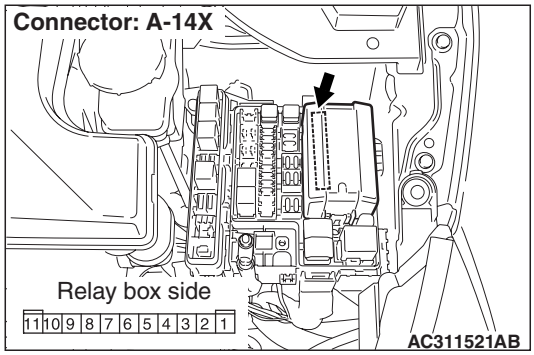

- Check the power supply line for open circuit.

Q: Is the check result normal?

YES : The trouble can be an intermittent malfunction (Refer to GROUP 00 – How to Cope with Intermittent Malfunction P.00-5).

NO : Repair the wiring harness.

Main Index
Group TOC

Step 5. Retest the system.
Check that the tail/stop lamps illuminate normally.

Q: Is the check result normal?
YES : . The trouble can be an intermittent malfunction (Refer to GROUP 00 – How to Cope with Intermittent Malfunction P.00-5).
NO : . Replace the front-ECU.

Inspection procedure L-2: The low-beam headlamps do not illuminate normally.

⚠ CAUTION
Whenever the ECU is replaced, ensure that the input and output signal circuits are normal.

Headlamp Relay (Low-Beam) Circuit

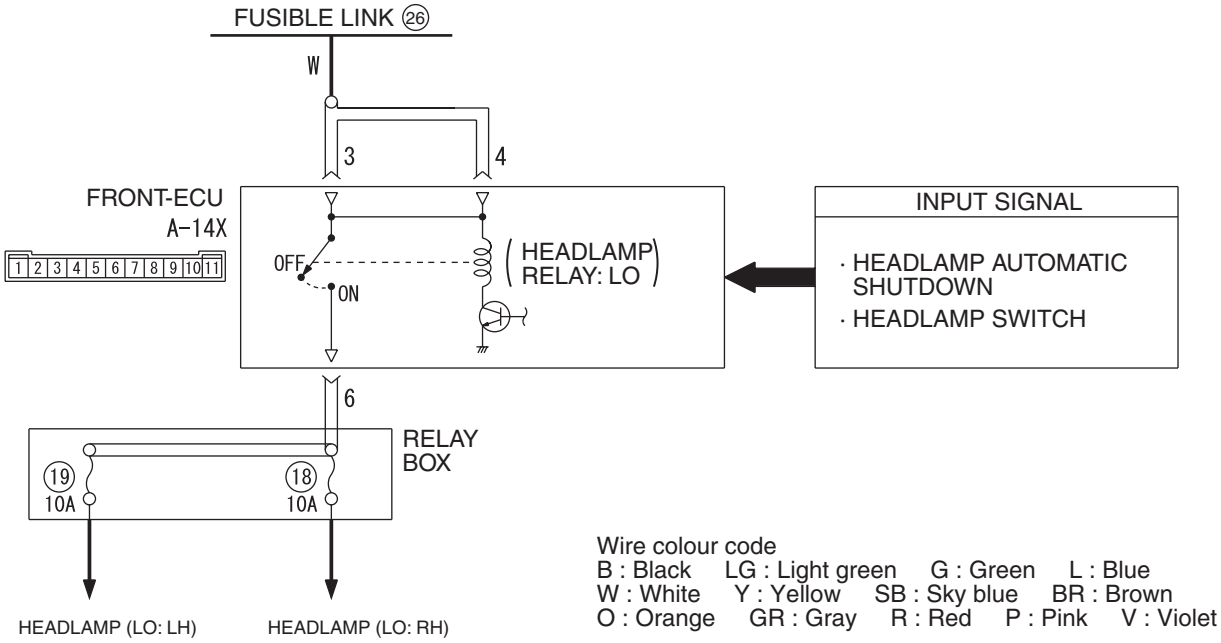

COMMENTS ON TROUBLE SYMPTOM

If the low-beam headlamps do not illuminate, the headlamp switch input circuit or the front-ECU may be defective.

POSSIBLE CAUSES

- Malfunction of the column switch
- Malfunction of the front-ECU
- Damaged harness wires and connectors

Main Index
Group TOC

DIAGNOSTIC PROCEDURE

Step 1. Pulse check

Check the input signal from the headlamp switch.

System switch	Check condition
Ignition switch (IG1)	When turned from ACC to ON
Headlamp switch	When the lighting switch is turned to the HEADLAMP position

OK: The M.U.T.-III sounds or the voltmeter needle fluctuates.

Q: Are the check result normal?

All the signals are received normally. : Go to Step 2.

The ignition switch (IG1) signal is not received. : Refer to inspection procedure P-2 "The ignition switch (IG1) signal is not received P.54B-322."

The headlamp switch signal is not received. : Refer to inspection procedure P-6 "The column switch (lighting and turn-signal lamp switch) signal is not received P.54B-337."

Step 2. Connector check: A-14X front-ECU connector

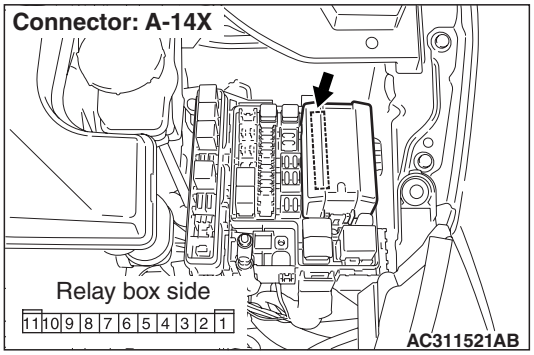

Q: Is the check result normal?

YES : Go to Step 3.

NO : Repair the defective connector.

Step 3. Voltage measurement at A-14X front-ECU connector.

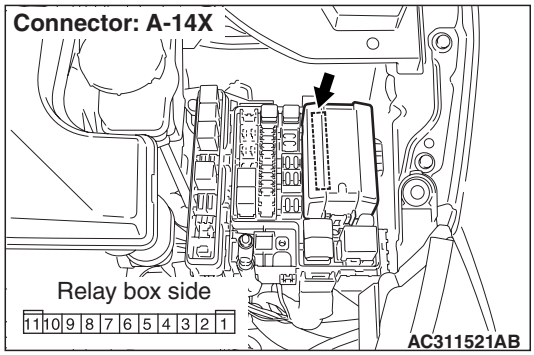

(1) Remove the front-ECU, and measure at the relay box side.

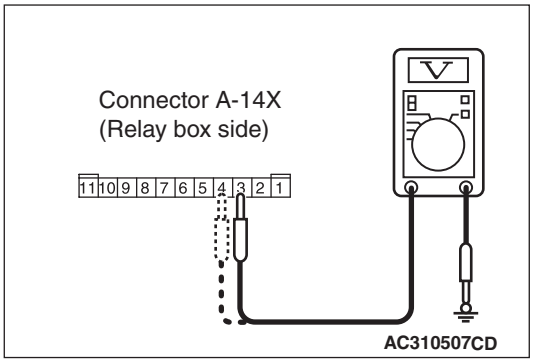

(2) Voltage between A-14X front-ECU connector terminal Nos.3 and 4 body earth

OK: System voltage

Q: Is the check result normal?

YES : Go to Step 5.

NO : Go to Step 4.

Step 4. Check the wiring harness between A-14X front-ECU connector terminal Nos.3 and 4 the fusible link (26).

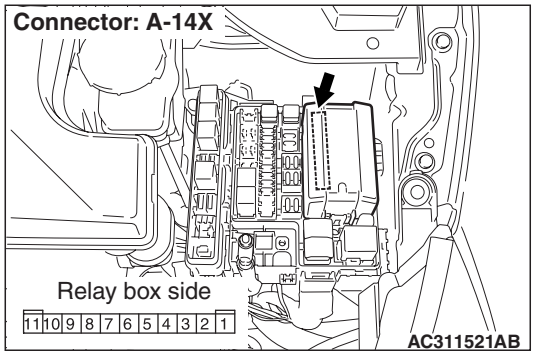

- Check the power supply line for open circuit.

Q: Is the check result normal?

YES : The trouble can be an intermittent malfunction (Refer to GROUP 00 – How to Cope with Intermittent Malfunction P.00-5).

NO : Repair the wiring harness.

Step 5. Retest the system.
Check that the low-beam headlamps illuminate normally.

Q: Is the check result normal?
YES : . The trouble can be an intermittent malfunction (Refer to GROUP 00 – How to Cope with Intermittent Malfunction P.00-5).
NO : . Replace the front-ECU.

INSPECTION PROCEDURE L-3: The high-beam headlamps do not illuminate normally.

⚠ CAUTION
Whenever the ECU is replaced, ensure that the input and output signal circuits are normal.

Headlamp Relay (High-Beam) Circuit

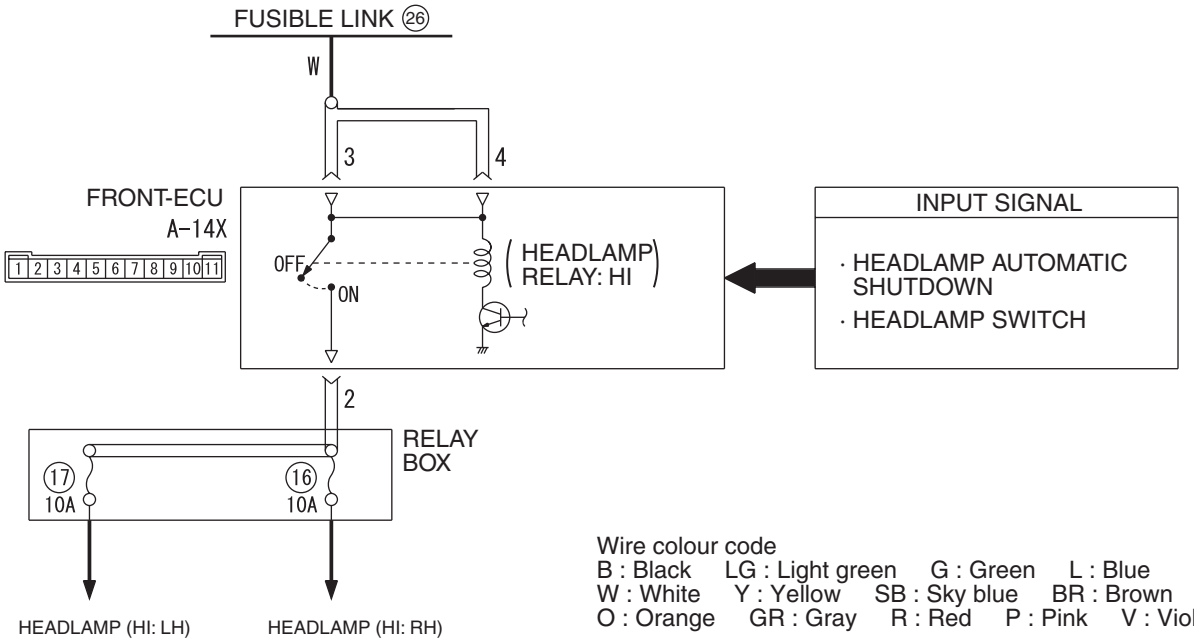

Wire colour code
B : Black LG : Light green G : Green L : Blue
W : White Y : Yellow SB : Sky blue BR : Brown
O : Orange GR : Gray R : Red P : Pink V : Violet

W4X54E28AA

COMMENTS ON TROUBLE SYMPTOM

If the high-beam headlamps do not illuminate, the dimmer switch input circuit or the front-ECU may be defective.

POSSIBLE CAUSES

- Malfunction of the column switch
- Malfunction of the front-ECU
- Damaged harness wires and connectors

DIAGNOSTIC PROCEDURE

Step 1. Check that the headlamps operate.
Check that the low-beam headlamps illuminate and extinguish normally.

Q: Is the check result normal?
YES : Go to Step 2.
NO : Refer to inspection procedure L-2 "The low-beam headlamps do not illuminate normally P.54B-235."

Main Index
Group TOC

Step 2. Pulse check
Check the input signal from the dimmer switch.

System switch	Check condition
Dimmer switch	When the dimmer switch is turned from off to on

OK: The M.U.T.-III sounds or the voltmeter needle fluctuates.

Q: Is the check result normal?
YES : Go to Step 3.
NO : Refer to inspection procedure P-6 "The column switch (lighting and turn-signal lamp switch) signal is not received P.54B-337."

Step 3. Retest the system.
Check that the high-beam headlamps illuminate normally.

Q: Is the check result normal?
YES : The trouble can be an intermittent malfunction (Refer to GROUP 00 – How to Cope with Intermittent Malfunction P.00-5).
NO : Replace the front-ECU.

INSPECTION PROCEDURE L-4: The high-beam and low-beam headlamps do not illuminate when the passing switch is operated.

⚠ CAUTION
Whenever the ECU is replaced, ensure that the input and output signal circuits are normal.

COMMENTS ON TROUBLE SYMPTOM

If the low-beam and high-beam headlamps are normal, the passing switch input signal circuit or the front-ECU may be defective.

POSSIBLE CAUSES

- Malfunction of the column switch
- Malfunction of the front-ECU
- Damaged harness wires and connectors

DIAGNOSTIC PROCEDURE

Step 1. Check that the headlamps operate.
Check that the low-beam and high-beam headlamps work normally.

Q: Is the check result normal?
YES : Go to Step 2.
NO : Repair the headlamps. Refer to trouble symptom chart P.54B-58.

Step 2. Pulse check
Check the input signal from the passing switch.

System switch	Check condition
Passing lamp switch	When the passing switch is turned from off to on

OK: The M.U.T.-III sounds or the voltmeter needle fluctuates.

Q: Is the check result normal?
YES : Go to Step 3.
NO : Refer to inspection procedure P-6 "The column switch (lighting and turn-signal lamp switch) signal is not received P.54B-337."

Step 3. Retest the system.
When the passing switch is turned on, check if the headlamps illuminate normally.

Q: Is the check result normal?
YES : The trouble can be an intermittent malfunction (Refer to GROUP 00 – How to Cope with Intermittent Malfunction P.00-5).
NO : Replace the front-ECU.

Main Index
Group TOC

INSPECTION PROCEDURE L-5: The headlamp automatic-shutdown function does not work normally.

⚠ CAUTION
Whenever the ECU is replaced, ensure that the input and output signal circuits are normal.

Headlamp Automatic Shutdown Function

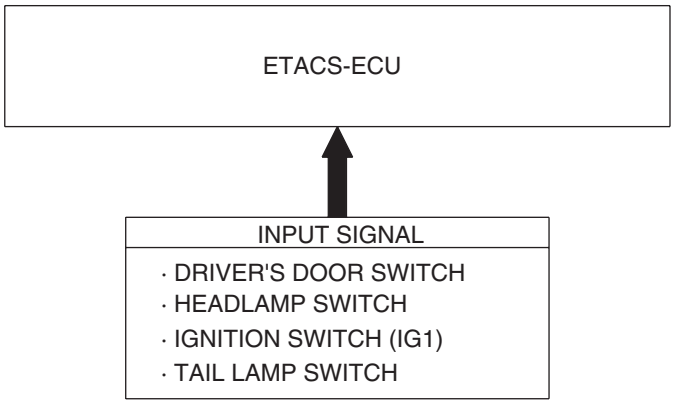

W4X54E162A

COMMENTS ON TROUBLE SYMPTOM

The ETACS-ECU operates this function in accordance with the input signals below.

- Ignition switch (IG1)
- Driver's door switch
- Tail lamp switch
- Headlamp switch

If this function does not work normally, these input signal circuit(s), the front-ECU or the ETACS-ECU may be defective. Note that this function can be disabled/enabled by the adjustment function (default setting; enabled).

POSSIBLE CAUSES

- Malfunction of the driver's door switch
- Malfunction of the front-ECU
- Malfunction of the column switch
- Malfunction of the ETACS-ECU
- Damaged harness wires and connectors

DIAGNOSTIC PROCEDURE

Step 1. Check that the headlamps operate.
Check that the low-beam and high-beam headlamps work normally.

Q: Is the check result normal?
YES : Go to Step 2.
NO : Repair the headlamps. Refer to trouble symptom chart P.54B-58.

Main Index
Group TOC

Step 2. Pulse check

Check the input signals below, which are related to the headlamp automatic-shutdown function.

System switch	Check condition
Ignition switch (IG1)	When turned from ACC to ON
Driver's door switch	When the driver's door is opened
Tail lamp switch	When the lighting switch is turned to the TAIL position

OK: The M.U.T.-III sounds or the voltmeter needle fluctuates.

Q: Is the check result normal?

All the signals are received normally. : Go to Step 3.

The ignition switch (IG1) signal is not received. : Refer to inspection procedure P-2 "The ignition switch (IG1) signal is not received P.54B-322."

The driver's door switch signal is not received. : Refer to inspection procedure P-5 "The driver's door switch signal is not received <LH drive vehicles>P.54B-333 or <RH drive vehicles>P.54B-335 ."

The tail lamp switch signal is not received. : Refer to inspection procedure P-6 "The column switch (lighting and turn-signal lamp switch) signal is not received P.54B-337."

Step 3. Check the SWS monitor customized function.

Check that the headlamp automatic-shutdown function has been enabled by using the customized function.

⚠ CAUTION

The SWS monitor must be used in order to confirm and change that setting. Use the SWS monitor to confirm and/or change the customized function.

Q: Is the check result normal?

YES : Go to Step 4.

NO : Enable the headlamp automatic-shutdown function by using the customized function (Refer to GROUP 54C, Customize function P.54C-432).

Step 4. Retest the system.

Replace the ETACS-ECU, and then check that the headlamp automatic-shutdown function works normally.

(1) Replace the ETACS-ECU.
(2) Check that the headlamp automatic-shutdown function works normally.

Q: Is the check result normal?

YES : The trouble can be an intermittent malfunction (Refer to GROUP 00 – How to Cope with Intermittent Malfunction P.00-5).

NO : Replace the front-ECU.

Main Index
Group TOC

INSPECTION PROCEDURE L-6: Any of tail/stop lamps, position lamps or licence plate lamp does not illuminate.

⚠ CAUTION

Whenever the ECU is replaced, ensure that the input and output signal circuits are normal.

Tail lamps, Position Lamps and License Plate Lamps Circuit

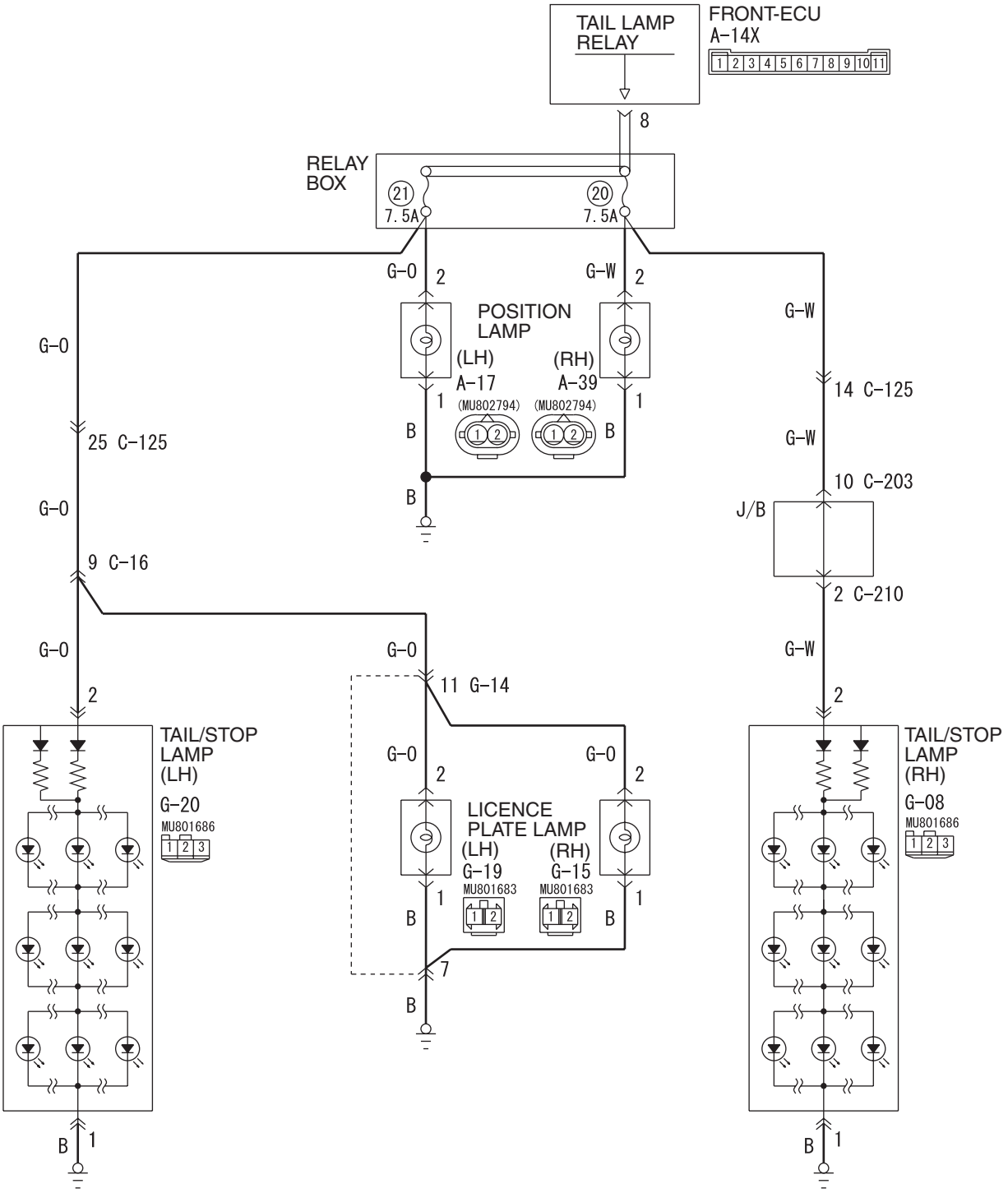

Wire colour code
B : Black LG : Light green G : Green L : Blue W : White Y : Yellow SB : Sky blue
BR : Brown O : Orange GR : Grey R : Red P : Pink V : Violet PU : Purple

W6X54X027A

Main Index
Group TOC

COMMENTS ON TROUBLE SYMPTOM

If the tail/stop lamps, the position lamps or the licence plate lamps do not illuminate, the wiring harness connector(s), the bulb or the fuse may be defective or burned out.

POSSIBLE CAUSES

- Burned-out bulb
- Damaged harness wires and connectors

DIAGNOSIS PROCEDURE

Step 1. Connector check: G-08 tail/stop lamp (RH) connector or G-20 tail/stop lamp (LH) connector, A-39 position lamp (RH) connector or A-17 position lamp (LH) connector, G-15 licence plate lamp (RH) connector or G-19 licence plate lamp (LH) connector

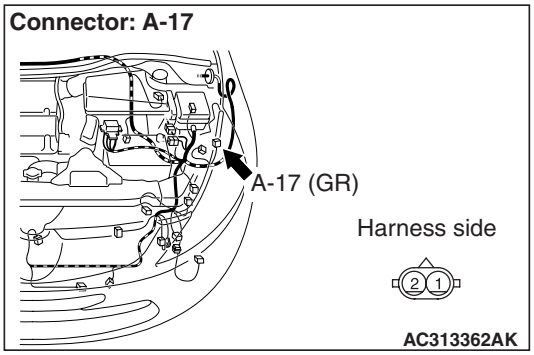

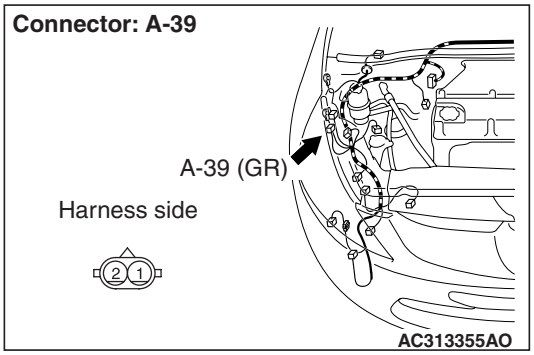

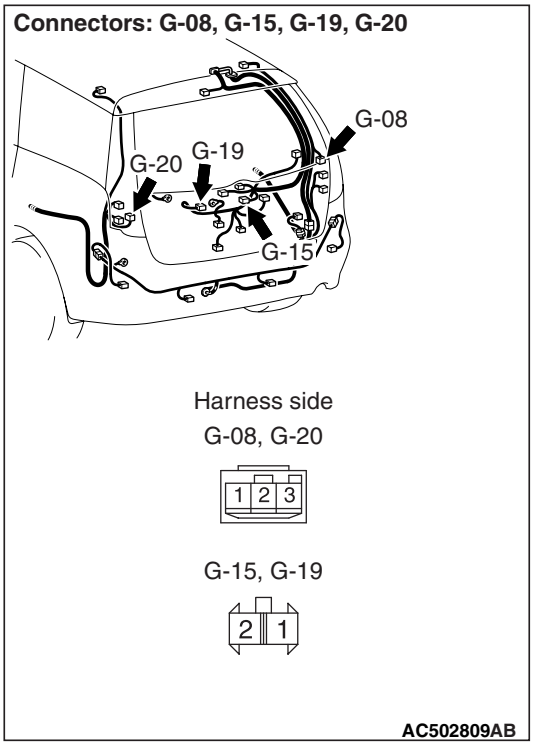

Q: Is the check result normal?
YES : Go to Step 2.
NO : Repair the defective connector.

Step 2. Check the bulbs of the position lamp or the licence plate lamp.

Check the bulb of the lamp which does not illuminate.

Q: Is the check result normal?
YES : Go to Step 3.
NO : Replace the bulb of the lamp which does not illuminate.

Main Index
Group TOC

Step 3. Resistance measurement at the G-08 tail/stop lamp (RH) connector or G-20 tail/stop lamp (LH) connector, the A-39 position lamp (RH) connector or A-17 position lamp (LH) connector, the G-15 licence plate lamp (RH) connector or G-19 licence plate lamp (LH) connector.

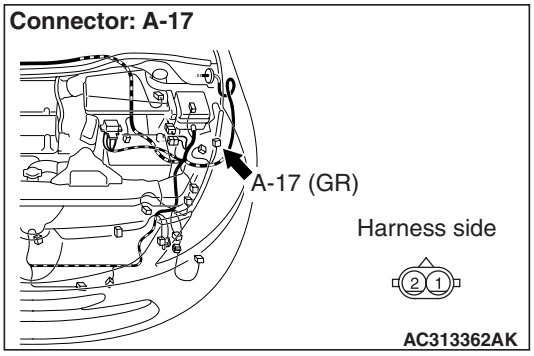

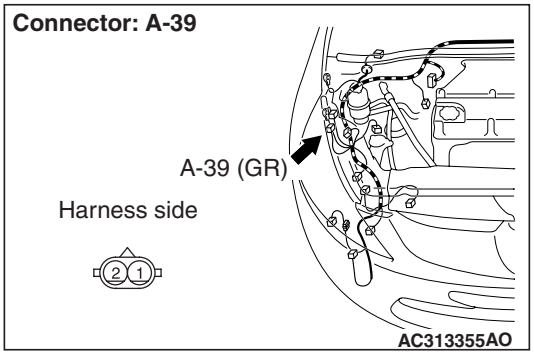

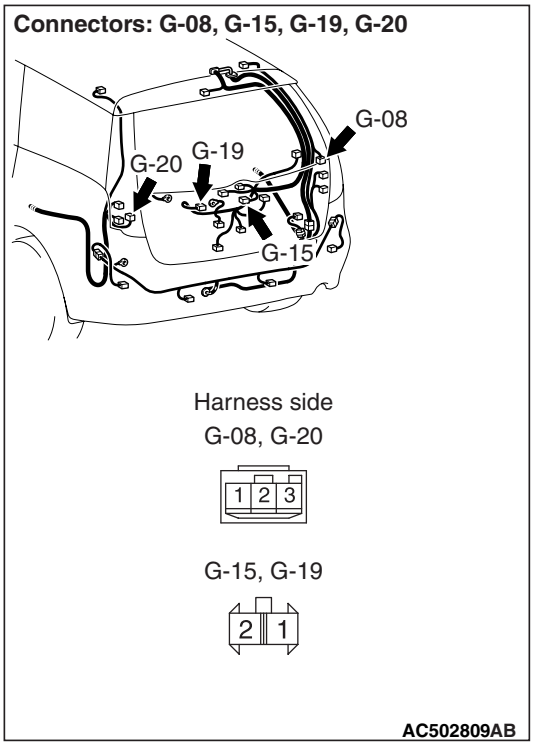

(1) Disconnect the connector, and measure at the wiring harness side.

(2) Check the resistance between the lamp connector and body earth.

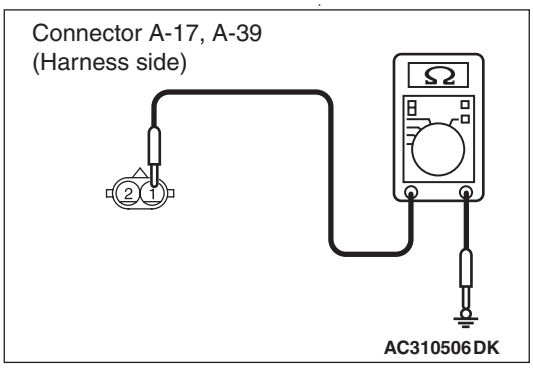

Resistance between A-39 position lamp (RH) connector terminal No.1 and body earth

- Resistance between A-17 position lamp (LH) connector terminal No.1 and body earth

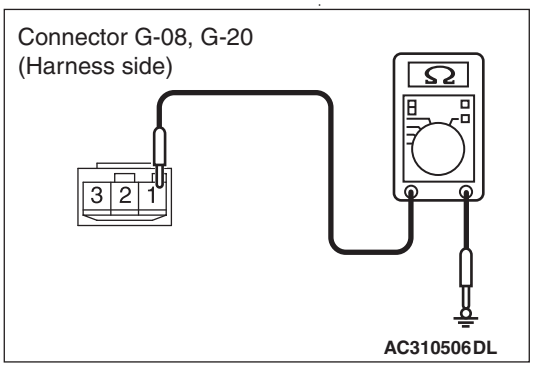

Resistance between G-08 tail/stop lamp (RH) connector terminal No.1 and body earth

- Resistance between G-20 tail/stop lamp (LH) connector terminal No.1 and body earth

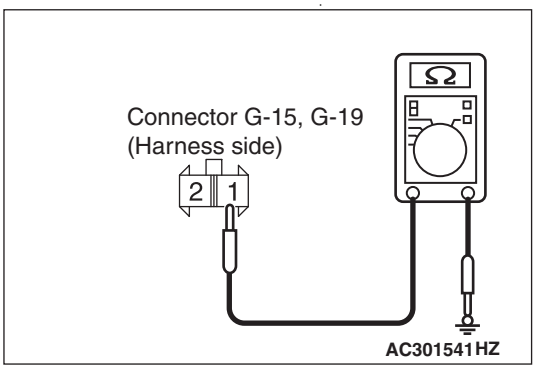

Resistance between G-15 licence plate lamp (RH) connector terminal No.1 and body earth

- Resistance between G-19 licence plate lamp (LH) connector terminal No.1 and body earth

OK: 2 Ω or less

Q: Is the check result normal?

YES : Go to Step 5.
NO : Go to Step 4.

Main Index
Group TOC

Step 4. Check the wiring harness from G-08 tail/stop lamp (RH) connector terminal No.1 or G-20 tail/stop lamp (LH) connector terminal No.1 or G-15 licence plate lamp (RH) connector terminal No.1 or G-19 licence plate lamp (LH) connector terminal No.1 to body earth, or A-39 position lamp (RH) connector terminal No.1 or A-17 position lamp (LH) connector terminal No.1and body earth.

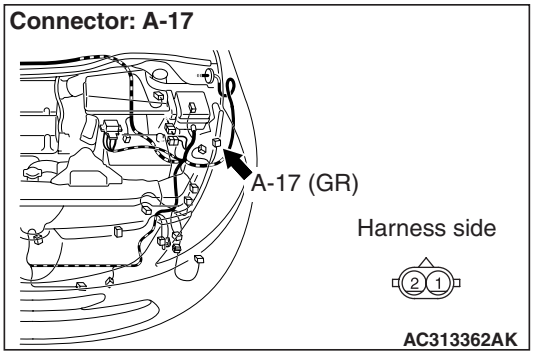

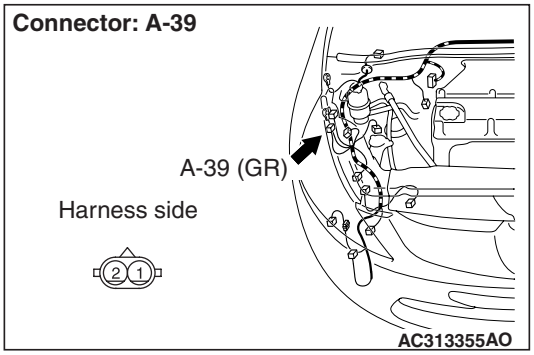

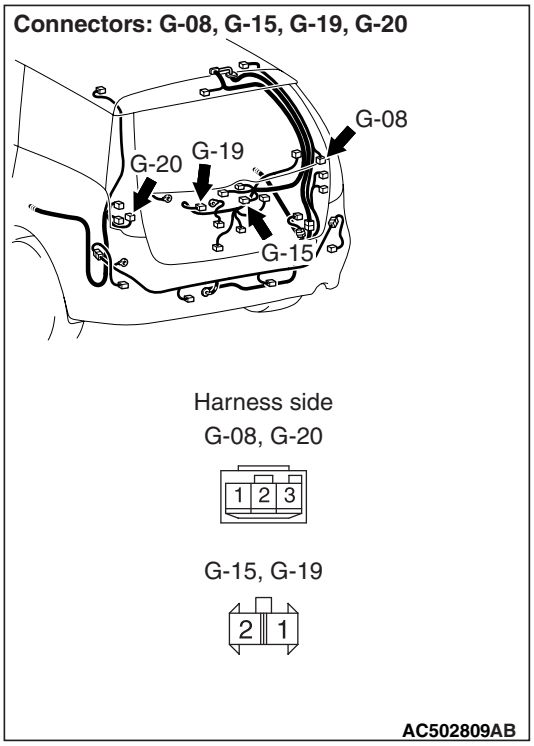

NOTE:

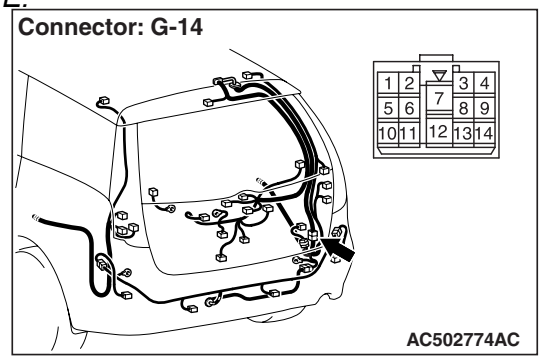

Prior to the wiring harness inspection, check intermediate connector G-14 <licence plate lamp> and repair if necessary.

- Check the earth wires for open circuit.

Q: Is the check result normal?
YES : Go to Step 5.
NO : Repair the wiring harness.

Step 5. Connector check: A-14X front-ECU connector

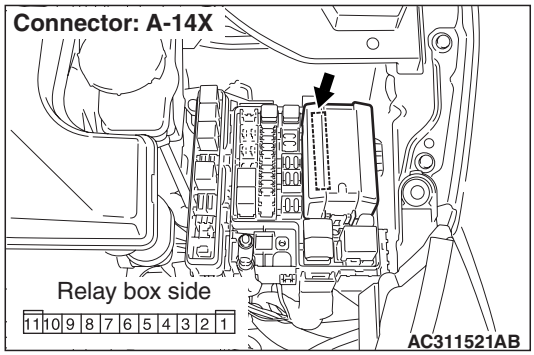

Q: Is the check result normal?
YES : Go to Step 6.
NO : Repair the defective connector.

Main Index
Group TOC

Step 6. Check the wiring harness from G-08 tail/stop lamp (RH) connector terminal No.2 or G-20 tail/stop lamp (LH) connector terminal No.2, A-39 position lamp (RH) connector terminal No.2 or A-17 position lamp (LH) connector terminal No.2 or G-15 licence plate lamp (RH) connector terminal No.2 or G-19 licence plate lamp (LH) connector terminal No.2 to A-14X front-ECU connector terminal No.8.

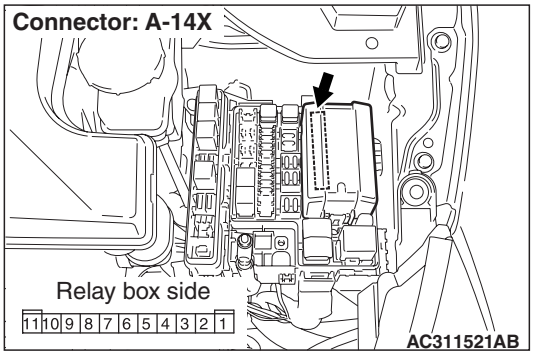

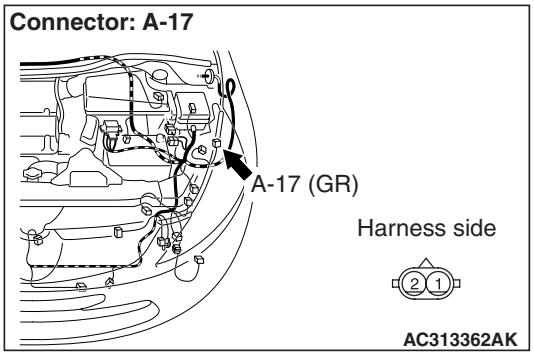

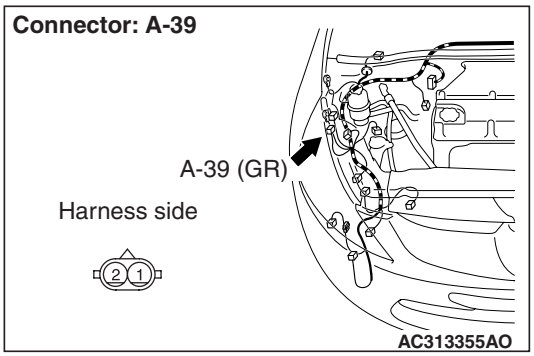

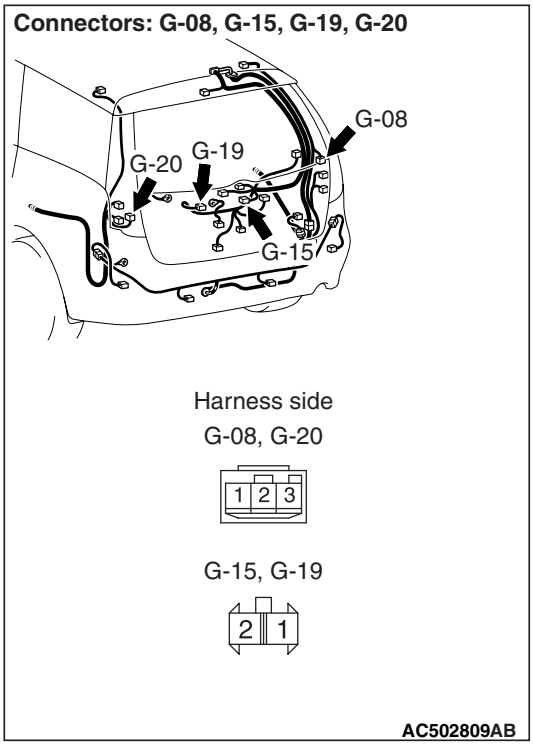

NOTE:

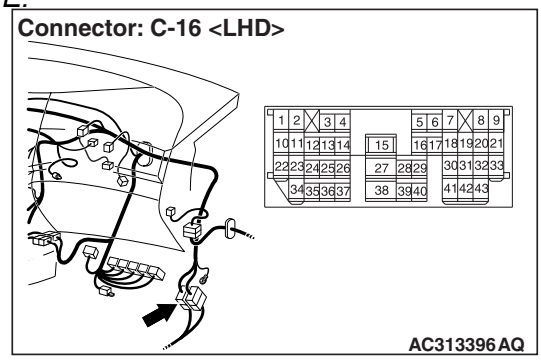

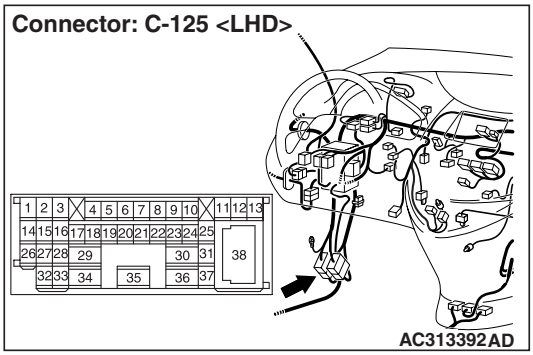

Main Index
Group TOC

Connectors: C-203, C-210 <LHD>
Junction block (Front view)

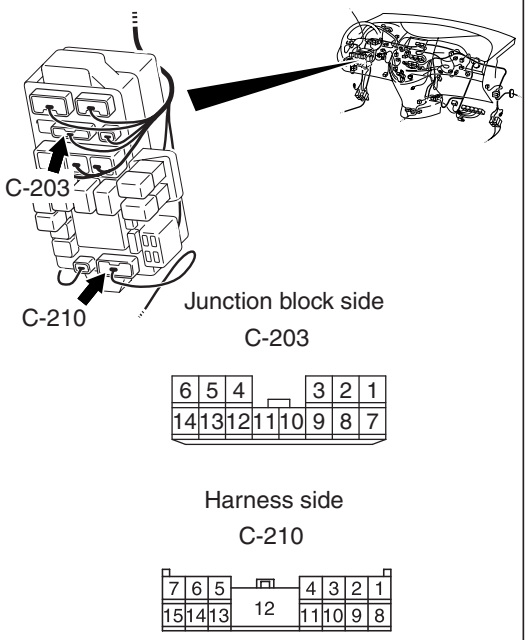

AC313399AR

Connector: G-14

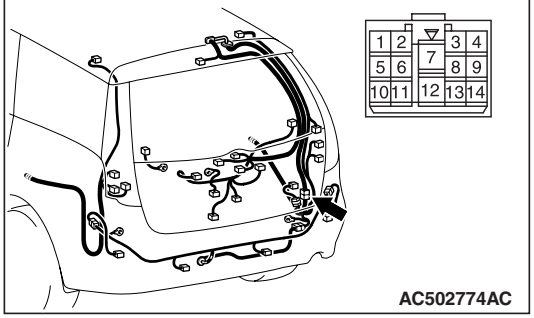

AC502774AC

<LH drive vehicles> Prior to the wiring harness inspection, check intermediate connector C-16 <tail/stop lamp (LH) and licence plate lamp>, C-125 <tail/stop lamp and licence plate lamp>, G-14 <licence plate lamp>, junction block connector C-203 <tail/stop lamp (RH)> and C-210 <tail/stop lamp (RH)>, and repair if necessary.

NOTE:

Connectors: C-16 <RHD>

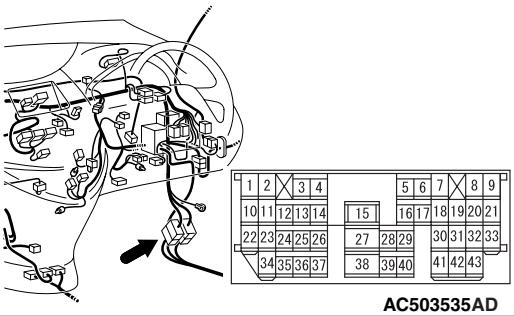

AC503535AD

Connector: C-125 <RHD>

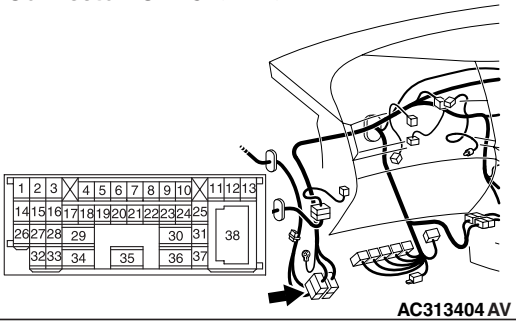

AC313404AV

Connectors: C-203, C-210 <RHD>
Junction block (Front view)

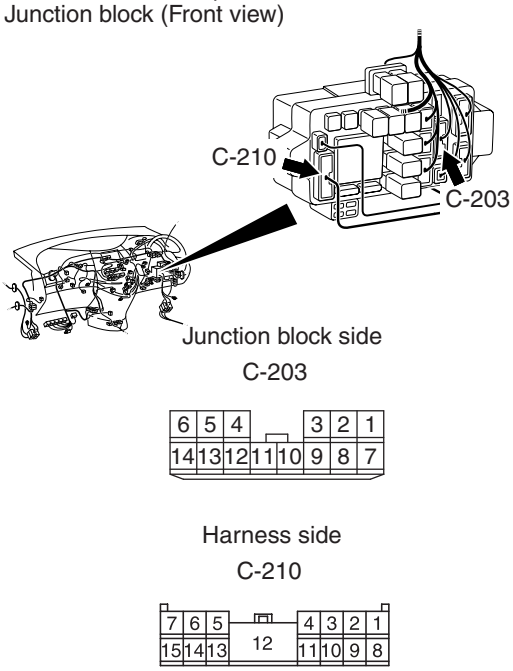

AC313409AQ

Main Index
Group TOC

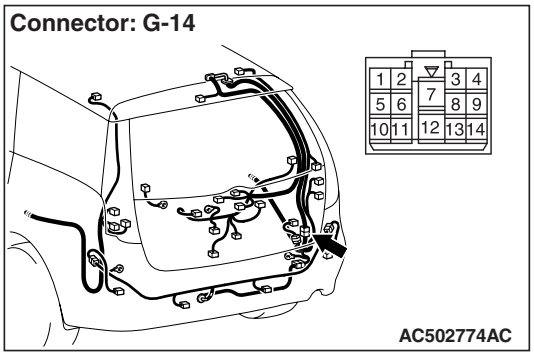

<RH drive vehicles> Prior to the wiring harness inspection, check intermediate connector C-16 <tail/stop lamp (LH) and licence plate lamp>, C-125 <tail/stop lamp and licence plate lamp>, G-14 <licence plate lamp>, junction block connector C-203 <tail/stop lamp (LH)> and C-210 <tail/stop lamp (LH)>, and repair if necessary.

- Check the output lines for open circuit.

Q: Is the check result normal?

YES : Go to Step 7.

NO : Repair the wiring harness.

Step 7. Retest the system.

Check that the tail lamps, the position lamps and the licence plate lamps illuminate normally.

Q: Is the check result normal?

The lamps illuminate normally at both high and low beams. : The trouble can be an intermittent malfunction (Refer to GROUP 00 – How to Cope with Intermittent Malfunction P.00-5).

When the tail/stop lamps do not illuminate : Replace the tail/stop lamp socket assembly.

When the position lamps do not illuminate : Replace the position lamp socket.

When the licence plate lamps do not illuminate : Replace the licence plate lamp socket.

Main Index
Group TOC

INSPECTION PROCEDURE L-7: The headlamp(s) do not illuminate.

⚠ CAUTION
Whenever the ECU is replaced, ensure that the input and output signal circuits are normal.

Headlamps Circuit

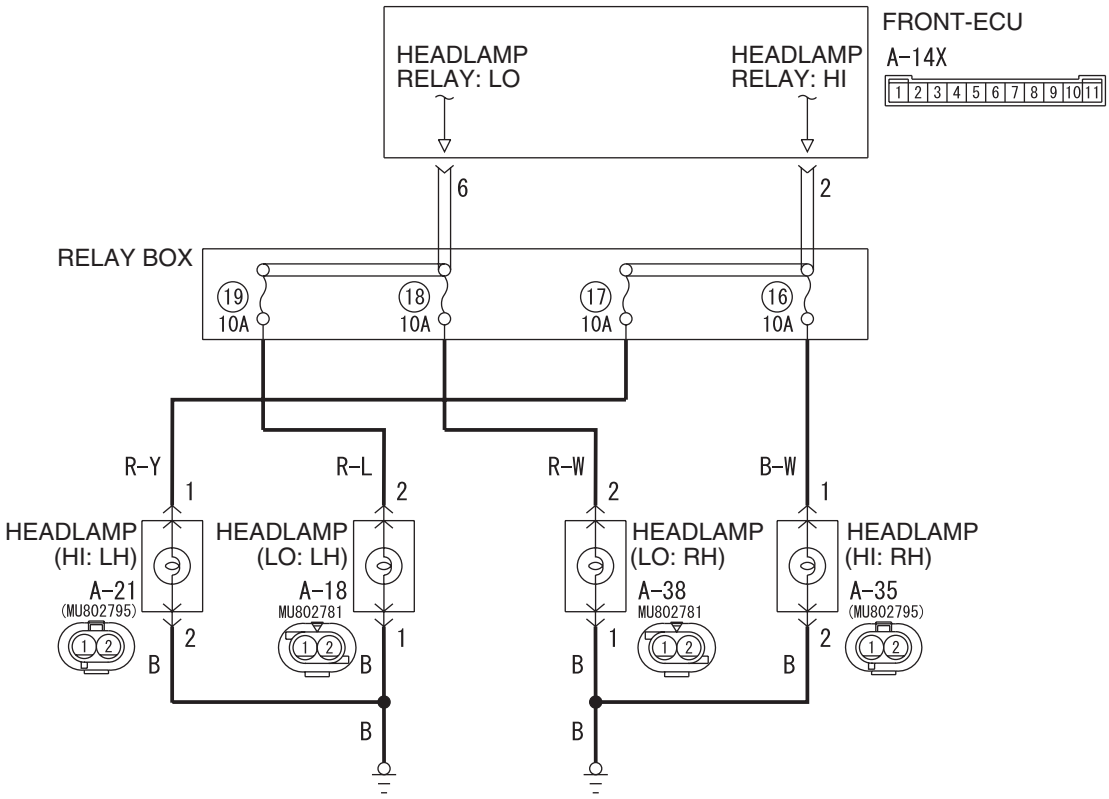

Wire colour code
B : Black LG : Light green G : Green L : Blue W : White Y : Yellow SB : Sky blue
BR : Brown O : Orange GR : Grey R : Red P : Pink V : Violet PU : Purple

W6X54X020A

COMMENTS ON TROUBLE SYMPTOM

If any of the headlamps or the high-beam indicator does not illuminate, the wiring harness connector(s), the bulb or the fuse may be defective or burned out.

POSSIBLE CAUSES

- Malfunction of the headlamp bulbs
- Malfunction of the high-beam indicator bulb
- Damaged harness wires and connectors

Main Index
Group TOC

DIAGNOSIS PROCEDURE

Step 1. Connector check: A-35 head lamp (HI: RH) connector or A-21 head lamp (HI: LH) connector, A-38 head lamp (LO: RH) connector or A-18 head lamp (LO: LH) connector.

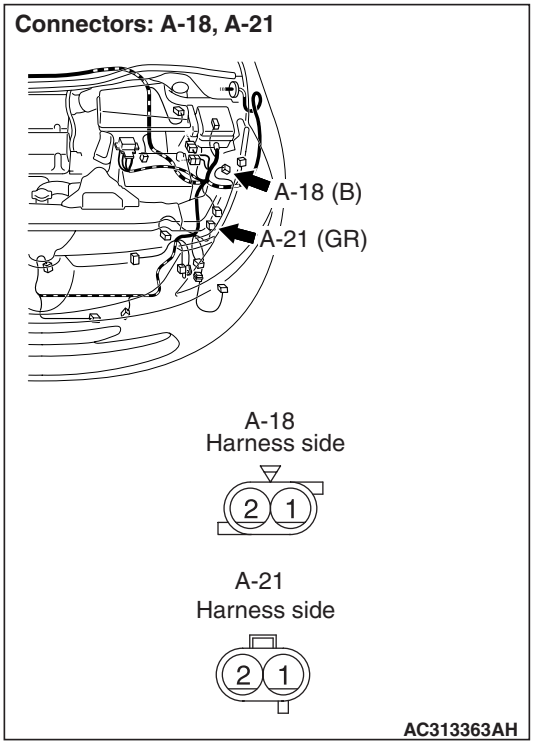

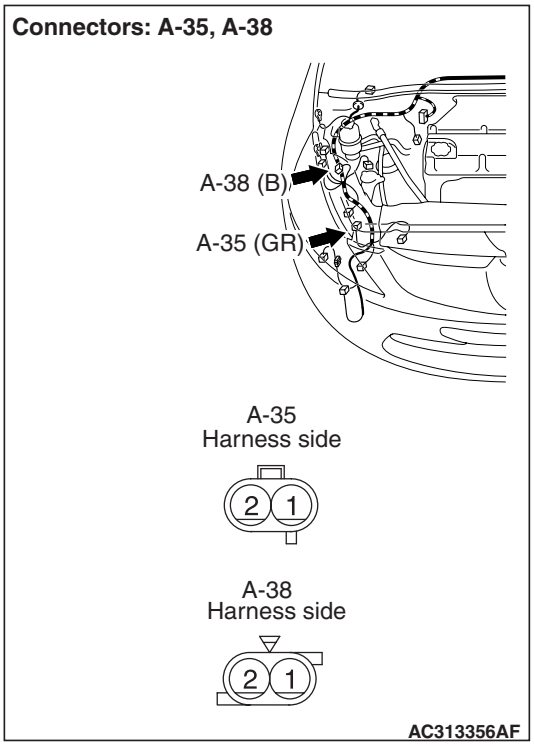

Q: Is the check result normal?
YES : . Go to Step 2.
NO : . Repair the defective connector.

Step 2. Check the bulbs of the head lamp.
Check the bulb of the lamp which does not illuminate.

Q: Is the check result normal?
YES : Go to Step 3.
NO : Replace the bulb of the lamp which does not illuminate.

Main Index
Group TOC

Step 3. Resistance measurement at the A-35 head lamp (HI: RH) connector or A-21 head lamp (HI: LH) connector, A-38 head lamp (LO: RH) connector or A-18 head lamp (LO: LH) connector.

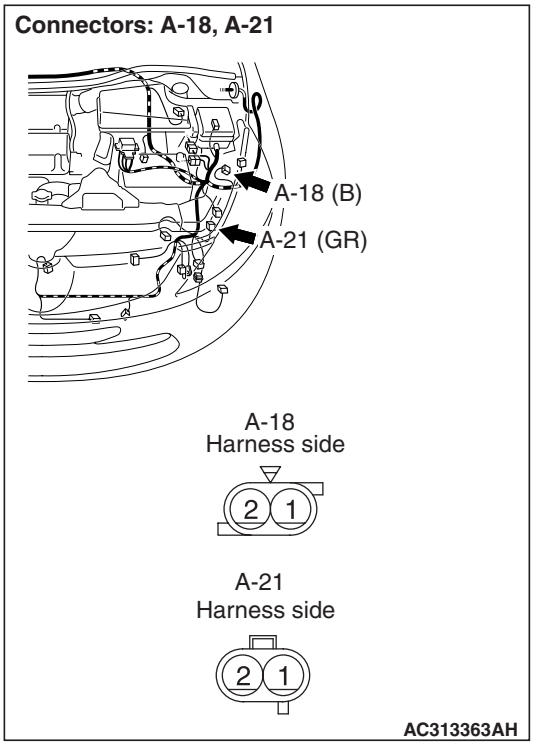

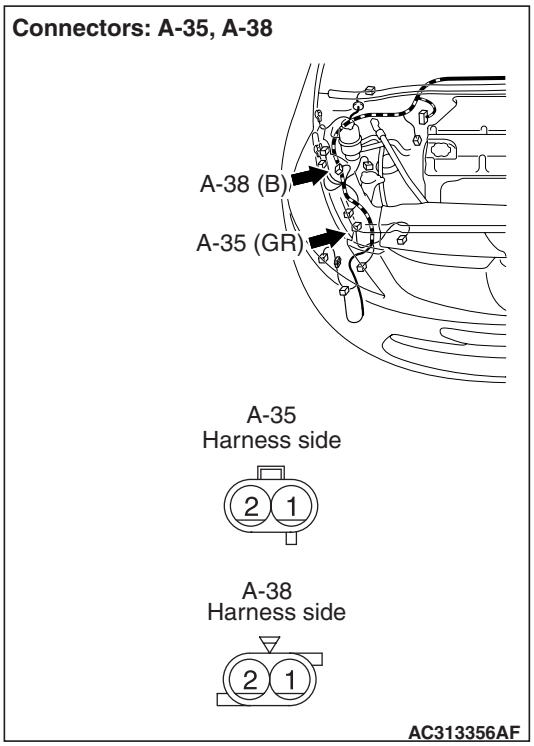

(1) Disconnect the connector, and measure at the wiring harness side.

(2) Check the resistance between the lamp connector and body earth.

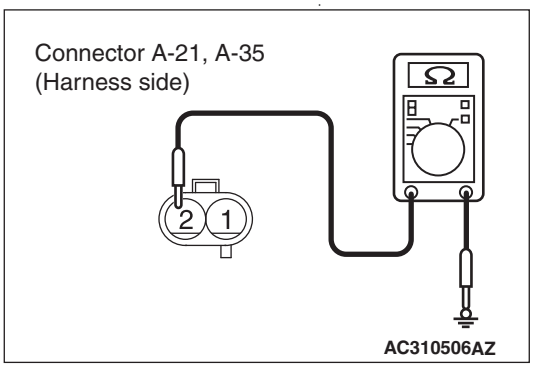

Resistance between A-35 headlamp (HI: RH) connector terminal No.2 and body earth

- Resistance between A-21 headlamp (HI: LH) connector terminal No.2 and body earth

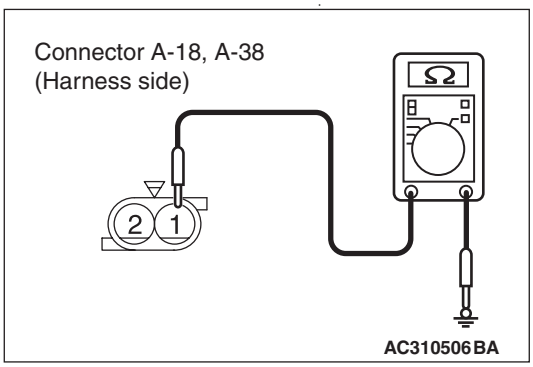

Resistance between A-38 headlamp (LO: RH) connector terminal No.1 and body earth

- Resistance between A-18 headlamp (LO: LH) connector terminal No.1 and body earth

OK: 2 Ω or less

Q: Is the check result normal?

YES : Go to Step 5.

NO : Go to Step 4.

Step 4. Check the wiring harness from A-35 head lamp (HI: RH) connector terminal No.2 or A-21 head lamp (HI: LH) connector terminal No.2, A-38 head lamp (LO: RH) connector terminal No.1 or A-18 head lamp (LO: LH) connector terminal No.1 to body earth.

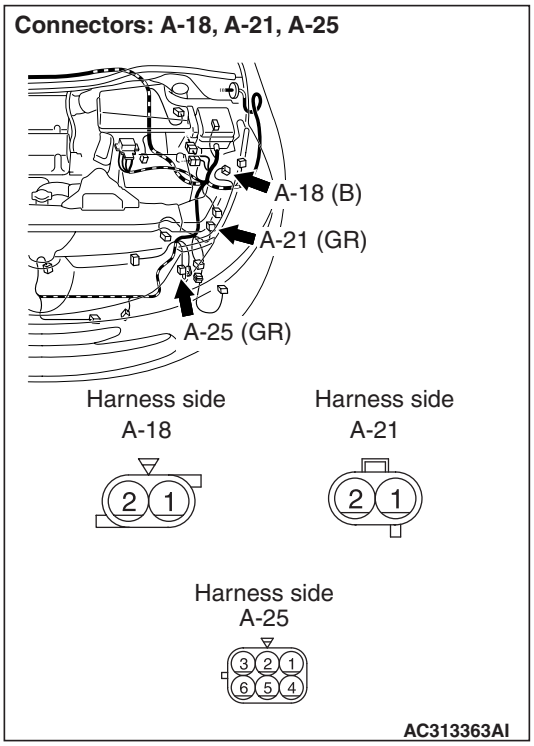

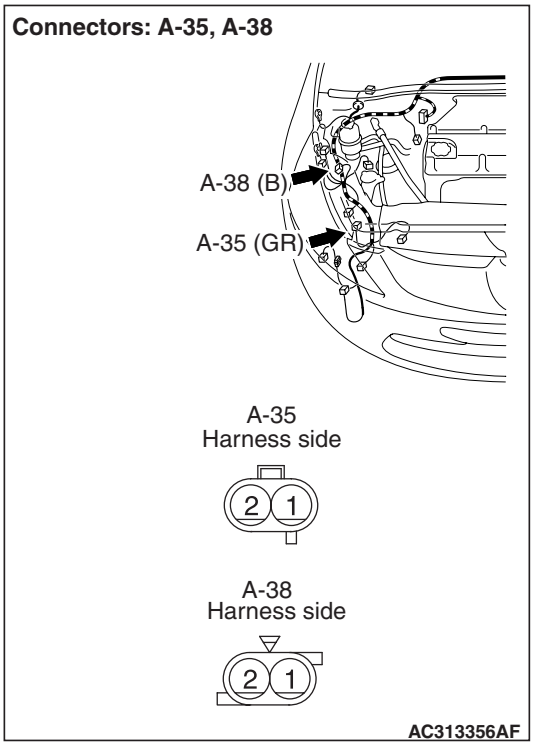

- Check the earth wires for open circuit.

Q: Is the check result normal?
YES : . Go to Step 7.
NO : . Repair the wiring harness.

Step 5. Connector check: A-14X front-ECU connector.

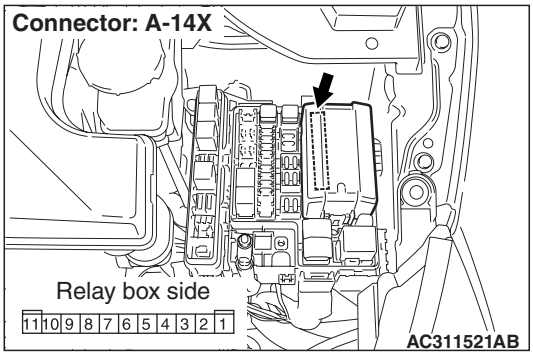

Q: Is the check result normal?
YES : Go to Step 6.
NO : Repair the defective connector.

Main Index
Group TOC

Step 6. Check the wiring harness from A-35 head lamp (HI: RH) connector terminal No.1, A-21 head lamp (HI: LH) connector terminal No.1, A-38 head lamp (LO: RH) connector terminal No.2 or A-18 head lamp (LO: LH) connector terminal No.2 to A-14X front-ECU connector terminal Nos.2 (HI) or 6 (LO).

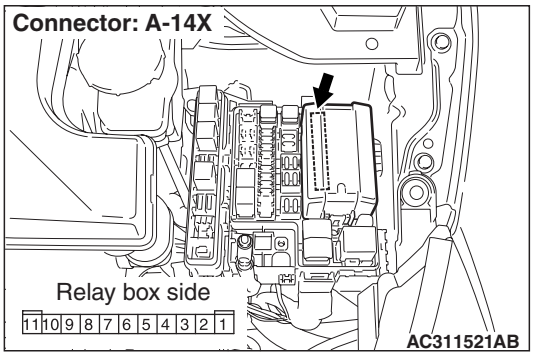

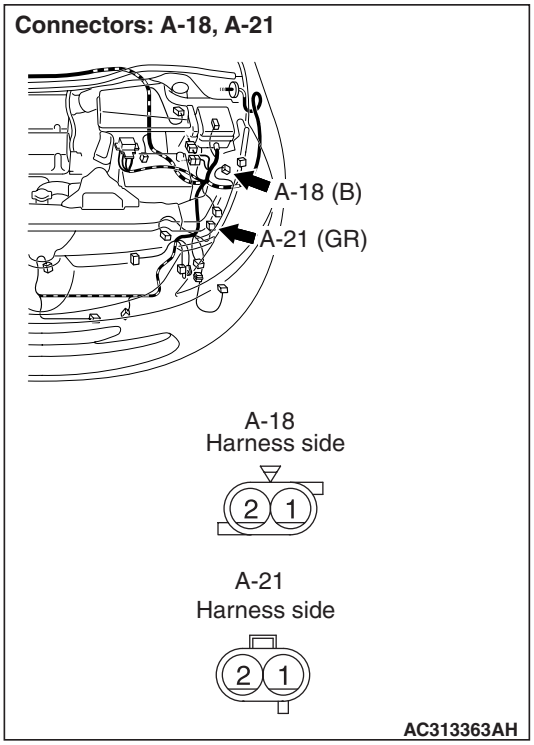

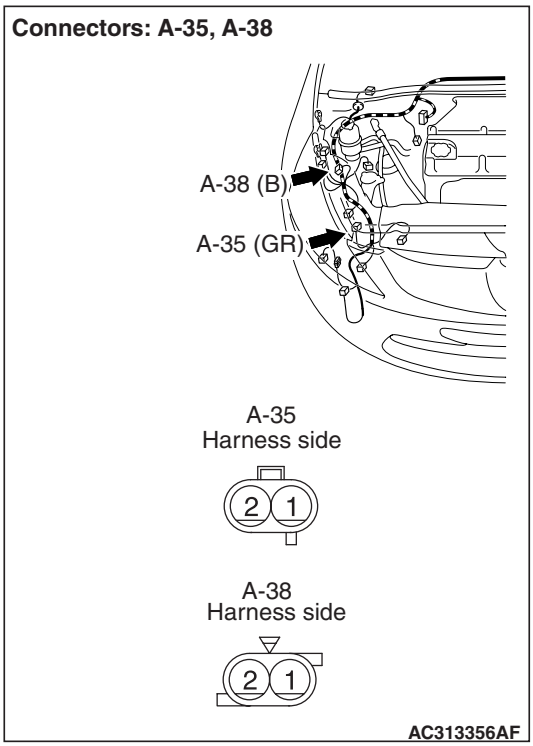

- Check the output lines for open circuit.

Q: Is the check result normal?
YES : Go to Step 7.
NO : Repair the wiring harness.

Step 7. Retest the system.
(1) Replace the socket of the defective headlamp.
(2) Check that the headlamps operate normally.

Q: Is the check result normal?
YES : The trouble can be an intermittent malfunction (Refer to GROUP 00 – How to Cope with Intermittent Malfunction P.00-5).
NO : Replace the headlamp assembly.

Main Index
Group TOC

INSPECTION PROCEDURE L-8: The high-beam indicator lamps does not illuminate.

⚠ CAUTION
Whenever the ECU is replaced, ensure that the input and output signal circuits are normal.

High-Beam Indicator Lamp Circuit

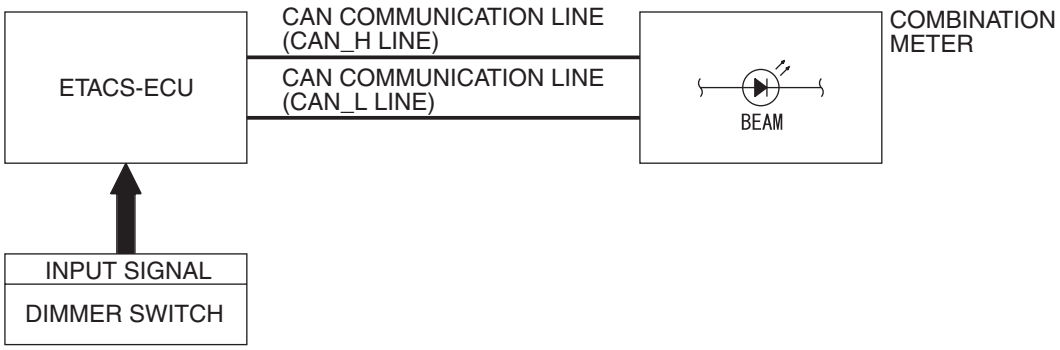

W4X54E031A

COMMENTS ON TROUBLE SYMPTOM

If the high beam indicator does not illuminate normally, connector(s), wiring harness in the CAN bus lines, the ETACS-ECU or the combination meter may be defective.

POSSIBLE CAUSES

- The combination meter may be defective
- The ETACS-ECU may be defective
- Damaged harness wires and connectors

DIAGNOSIS PROCEDURE

Step 1. Check the headlamps.
When the lighting switch is operated, check that the headlamps illuminate/go off normally.

Q: Are the headlamps in good condition?
YES : Go to Step 2.
NO : First, repair the headlamps. Refer to Inspection Procedure L-3 "The high-beam headlamps do not illuminate normally P.54B-237."

Step 2. M.U.T.-III CAN bus diagnostics.
Use the M.U.T.-III to diagnose the CAN bus lines.

Q: Is the check result normal?
YES : Go to Step 3.
NO : Repair the CAN bus line (Refer to GROUP 54F, Diagnosis P.54F-13).

Step 3. Check for combination meter diagnosis code.
When the ignition switch is turned to the LOCK (OFF) position, check that the ETACS-ECU does not set the diagnosis code.

Q: Is the diagnosis code set?
YES : Refer to diagnosis code chart P.54B-26.
NO : Go to Step 4.

Step 4. M.U.T.-III actuator test
Perform the actuator test for the combination meter, and check that the high-beam indicator illuminates (Refer to GROUP 54A – Combination Meter P.54A-95).

Q: Is the check result normal?
YES : Replace the ETACS-ECU.
NO : Replace the combination meter.

Main Index
Group TOC

FLASHER TIMER

INSPECTION PROCEDURE M-1: The turn-signal lamps do not illuminate.

⚠ CAUTION

Whenever the ECU is replaced, ensure that the input and output signal circuits are normal.

Turn-Signal Lamp Power Supply Circuit

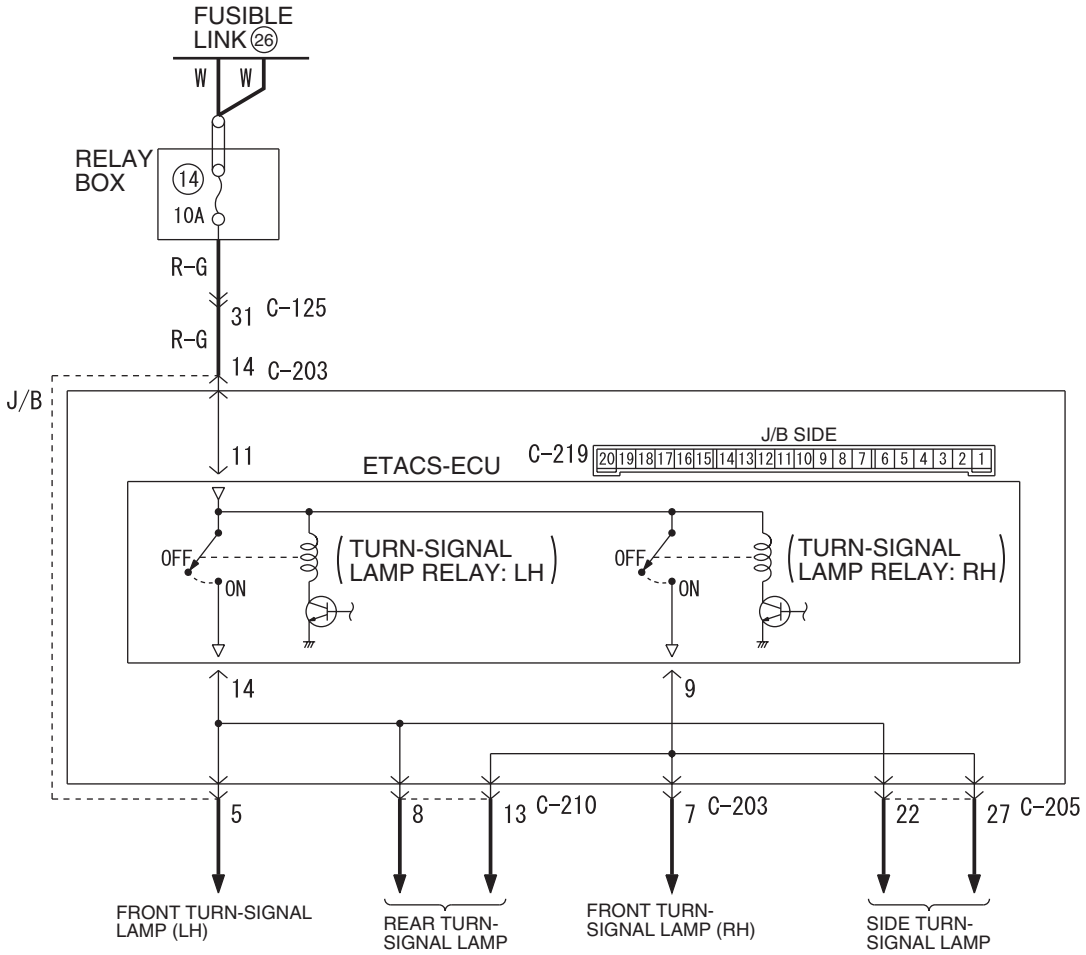

Wire colour code
B : Black LG : Light green G : Green L : Blue W : White Y : Yellow SB : Sky blue
BR : Brown O : Orange GR : Gray R : Red P : Pink V : Violet

W4X54E092A

COMMENTS ON TROUBLE SYMPTOM

If all the turn-signal lamps do not illuminate, the ignition switch (IG1), the turn-signal lamp switch input circuit or the ETACS-ECU may be defective.

POSSIBLE CAUSES

- Malfunction of the column switch
- Malfunction of the ETACS-ECU
- Damaged harness wires and connectors

Main Index
Group TOC

DIAGNOSTIC PROCEDURE

Step 1. Check that the hazard warning lamps operate.

Check that the hazard warning lamps illuminate normally.

Q: Is the check result normal?
YES : Go to Step 6.
NO : Go to Step 2.

Step 2. Connector check: C-219 ETACS-ECU connector.

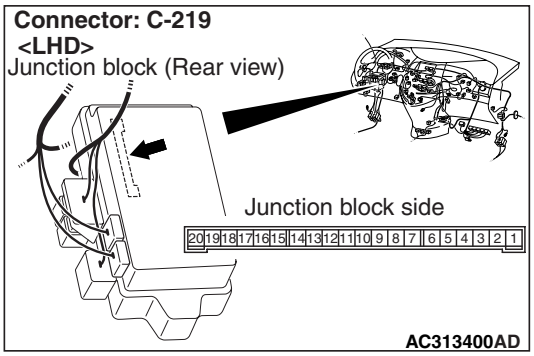

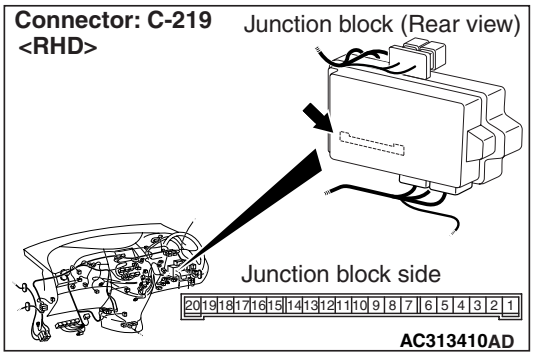

Q: Is the check result normal?
YES : Go to Step 3.
NO : Repair the defective connector.

Step 3. Voltage measurement at the C-219 ETACS-ECU connector.

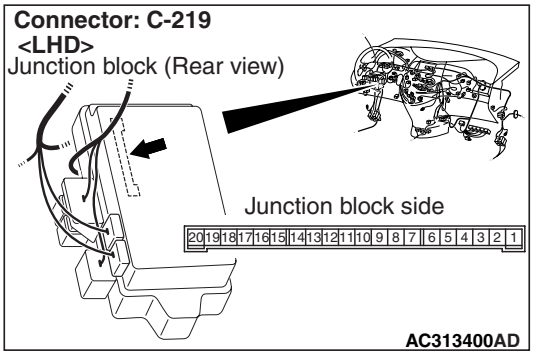

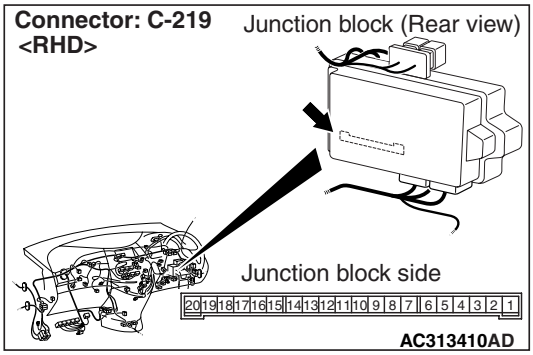

(1) Remove the ETACS-ECU, and measure at the junction block side.

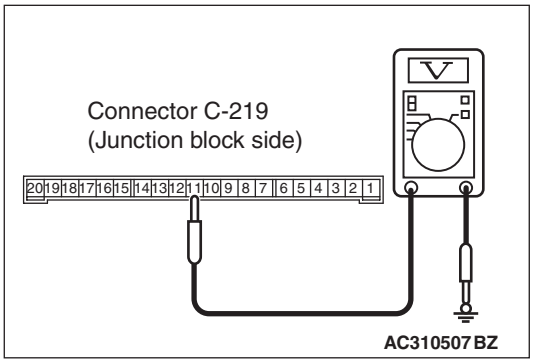

(2) Voltage between C-219 ETACS-ECU connector terminal No.11 and body earth

OK: System voltage

Q: Is the check result normal?
YES : Go to Step 5.
NO : Go to Step 4.

Main Index
Group TOC

Step 4. Check the wiring harness between C-219 ETACS-ECU connector terminal No.11 and the fusible link (26).

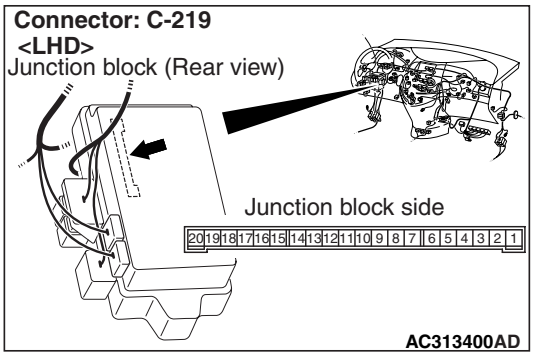

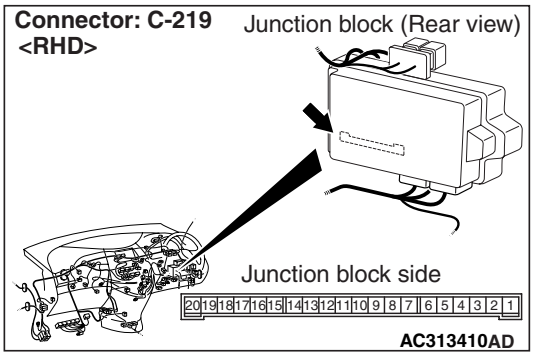

NOTE:

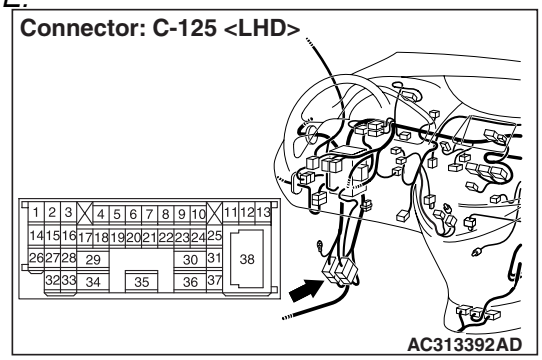

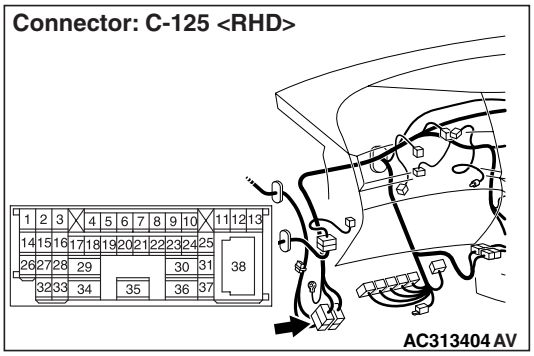

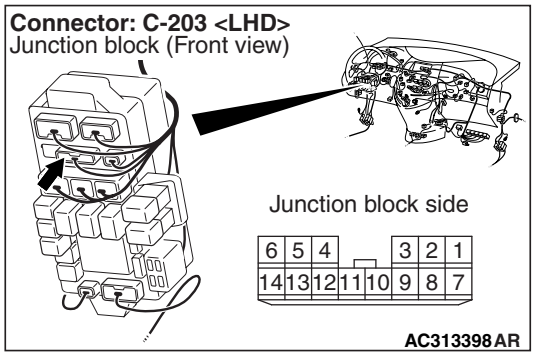

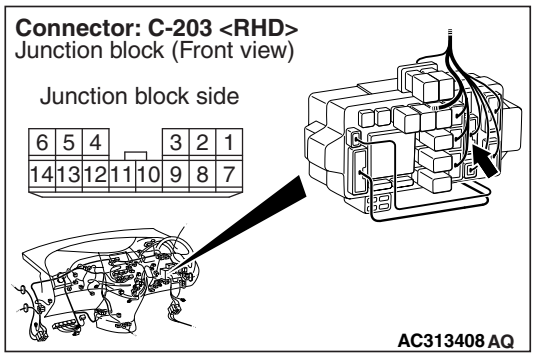

Prior to the wiring harness inspection, check intermediate connector C-125 and junction block connector C-203, and repair if necessary.

- Check the power supply line for open circuit.

Q: Is the check result normal?

YES : The trouble can be an intermittent malfunction (Refer to GROUP 00 – How to Cope with Intermittent Malfunction P.00-5).

NO : Repair the wiring harness.

Step 5. Retest the system.

Check that the turn-signal lamps illuminate normally.

Q: Is the check result normal?

YES : The trouble can be an intermittent malfunction (Refer to GROUP 00 – How to Cope with Intermittent Malfunction P.00-5).

NO : Replace the ETACS-ECU.

Step 6. Pulse check

Check the input signals below, which are related to the turn-signal lamp illumination.

System switch	Check condition
Turn-signal lamp switch (RH)	When the turn-signal lamp switch (RH) is turned from off to on
Turn-signal lamp switch (LH)	When the turn-signal lamp switch (LH) is turned from off to on

OK: The M.U.T.-III sounds or the voltmeter needle fluctuates.

Main Index
Group TOC

Q: Are the check result normal?

All the signals are received normally. : Go to Step 7.

The turn-signal lamp switch (RH) signal is not received. : Refer to inspection procedure P-6 "The column switch (lighting and turn-signal lamp switch) signal is not received P.54B-337."

The turn-signal lamp switch (LH) signal is not received. : Refer to inspection procedure P-6 "The column switch (lighting and turn-signal lamp switch) signal is not received P.54B-337."

Step 7. Retest the system.

Check that the turn-signal lamps illuminate.

Q: Is the check result normal?

YES : The trouble can be an intermittent malfunction (Refer to GROUP 00 – How to Cope with Intermittent Malfunction P.00-5).

NO : Replace the ETACS-ECU.

INSPECTION PROCEDURE M-2: The hazard warning lamps do not illuminate.

⚠ CAUTION

Whenever the ECU is replaced, ensure that the input and output signal circuits are normal.

Hazard Warning Lamp Circuit

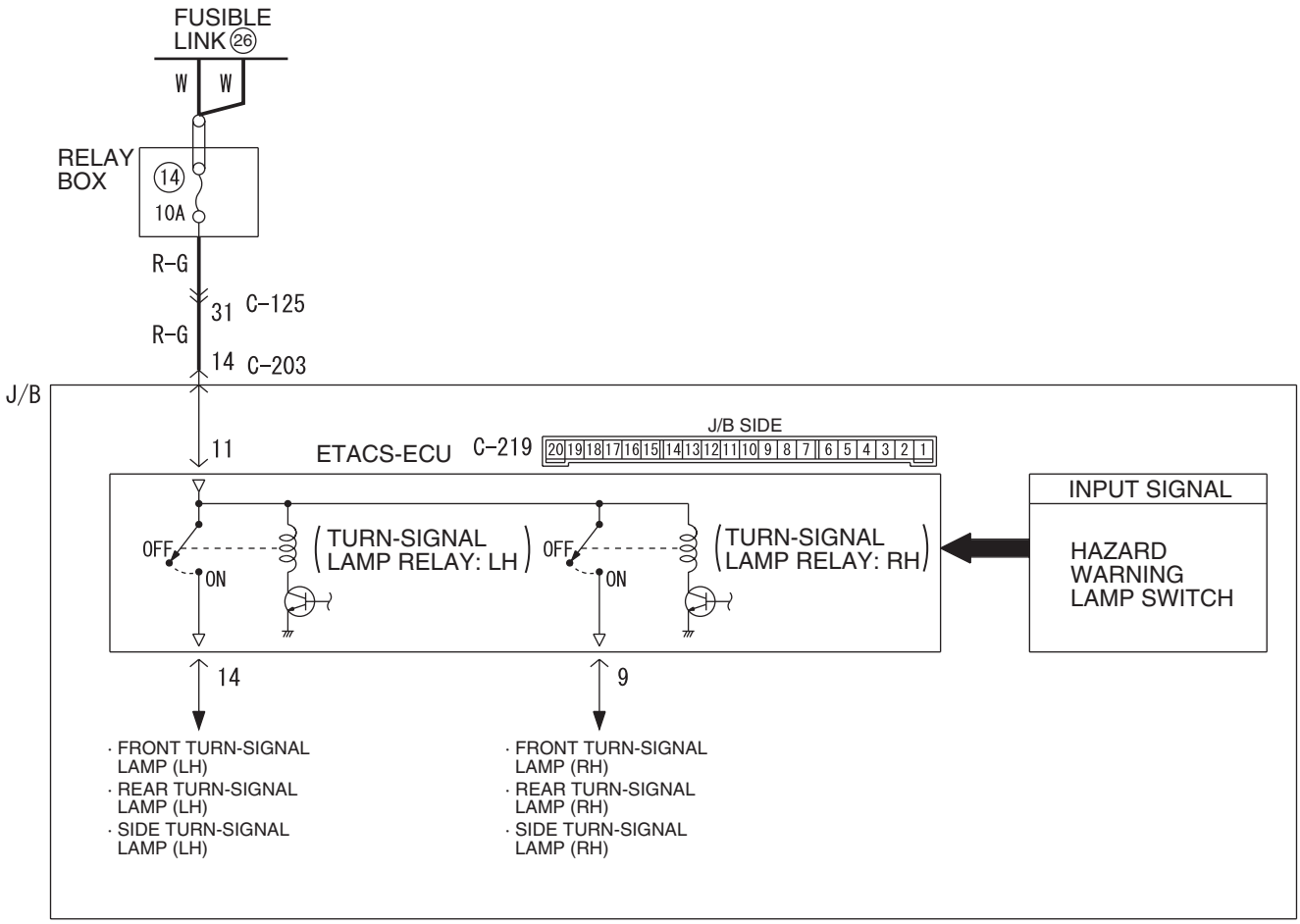

Wire colour code
B : Black LG : Light green G : Green L : Blue W : White Y : Yellow SB : Sky blue
BR : Brown O : Orange GR : Gray R : Red P : Pink V : Violet

W4X54E093A

Main Index
Group TOC

COMMENTS ON TROUBLE SYMPTOM

If the hazard warning lamps do not illuminate, the hazard warning lamp input signal circuit or the ETACS-ECU may be defective.

POSSIBLE CAUSES

- Malfunction of the hazard warning lamp switch
- Malfunction of the ETACS-ECU
- Damaged harness wires and connectors

DIAGNOSTIC PROCEDURE

Step 1. Check that the turn-signal lamps operate.
Check that the turn-signal lamps illuminate normally.

Q: Is the check result normal?
YES : Go to Step 2.
NO : Refer to inspection procedure M-1 "The turn signal lamps do not illuminate P.54B-254."

Step 2. Check the power supply circuit.
When the ignition switch is at the LOCK (OFF) position, check that the functions below work normally.

- Lamp reminder function
- Central door locking system
- Room lamp (excluding interior lamp automatic-shutdown function)

Q: Is the check result normal?
YES : . Go to Step 3.
NO : . Refer to inspection procedure A-2 "Check the ETACS-ECU battery power supply circuit P.54B-71."

Step 3. Pulse check
Check the input signal from the hazard warning lamp switch.

System switch	Check condition
Hazard warning lamp switch	When the hazard warning lamp switch is turned from off to on

OK: The M.U.T.-III sounds or the voltmeter needle fluctuates.

Q: Is the check result normal?
YES : Go to Step 4.
NO : Refer to inspection procedure P-11 "The hazard warning lamp switch signal is not received P.54B-354."

Step 4. Retest the system.
Check that the hazard warning lamps illuminate.

Q: Is the check result normal?
YES : The trouble can be an intermittent malfunction (Refer to GROUP 00 – How to Cope with Intermittent Malfunction P.00-5).
NO : Replace the ETACS-ECU.

Main Index
Group TOC

INSPECTION PROCEDURE M-3: Any of the turn-signal lamps does not illuminate.

⚠ CAUTION

Whenever the ECU is replaced, ensure that the input and output signal circuits are normal.

Left Turn-Signal Lamps Circuit <LHD>

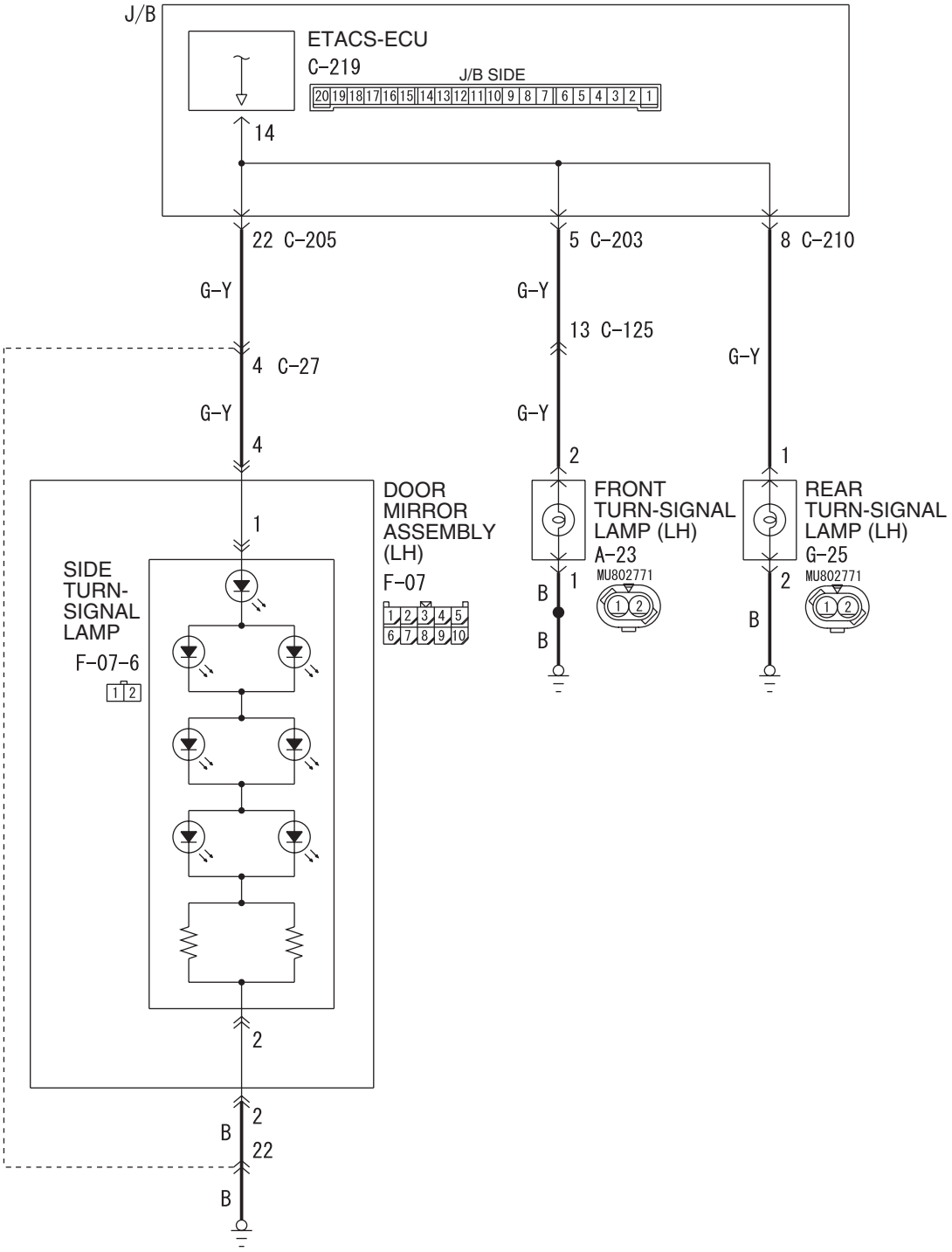

Wire colour code
B : Black LG : Light green G : Green L : Blue W : White Y : Yellow SB : Sky blue
BR : Brown O : Orange GR : Grey R : Red P : Pink V : Violet PU : Purple

W6X54X015A

Main Index
Group TOC

Left Turn-Signal Lamps Circuit <RHD>

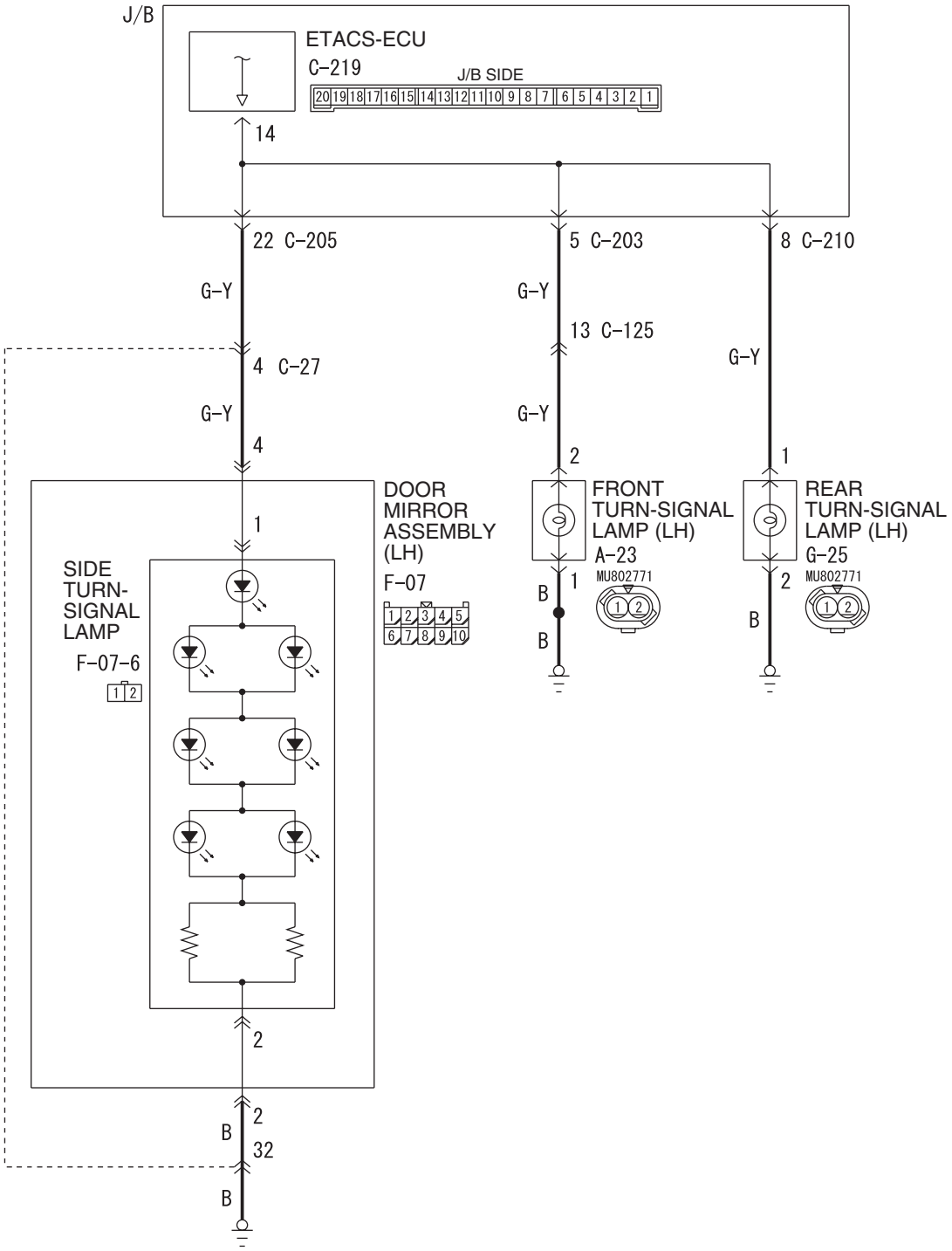

Wire colour code
B : Black LG : Light green G : Green L : Blue W : White Y : Yellow SB : Sky blue
BR : Brown O : Orange GR : Grey R : Red P : Pink V : Violet PU : Purple

W6X54X014A

Main Index
Group TOC

Right Turn-Signal Lamps Circuit <LHD>

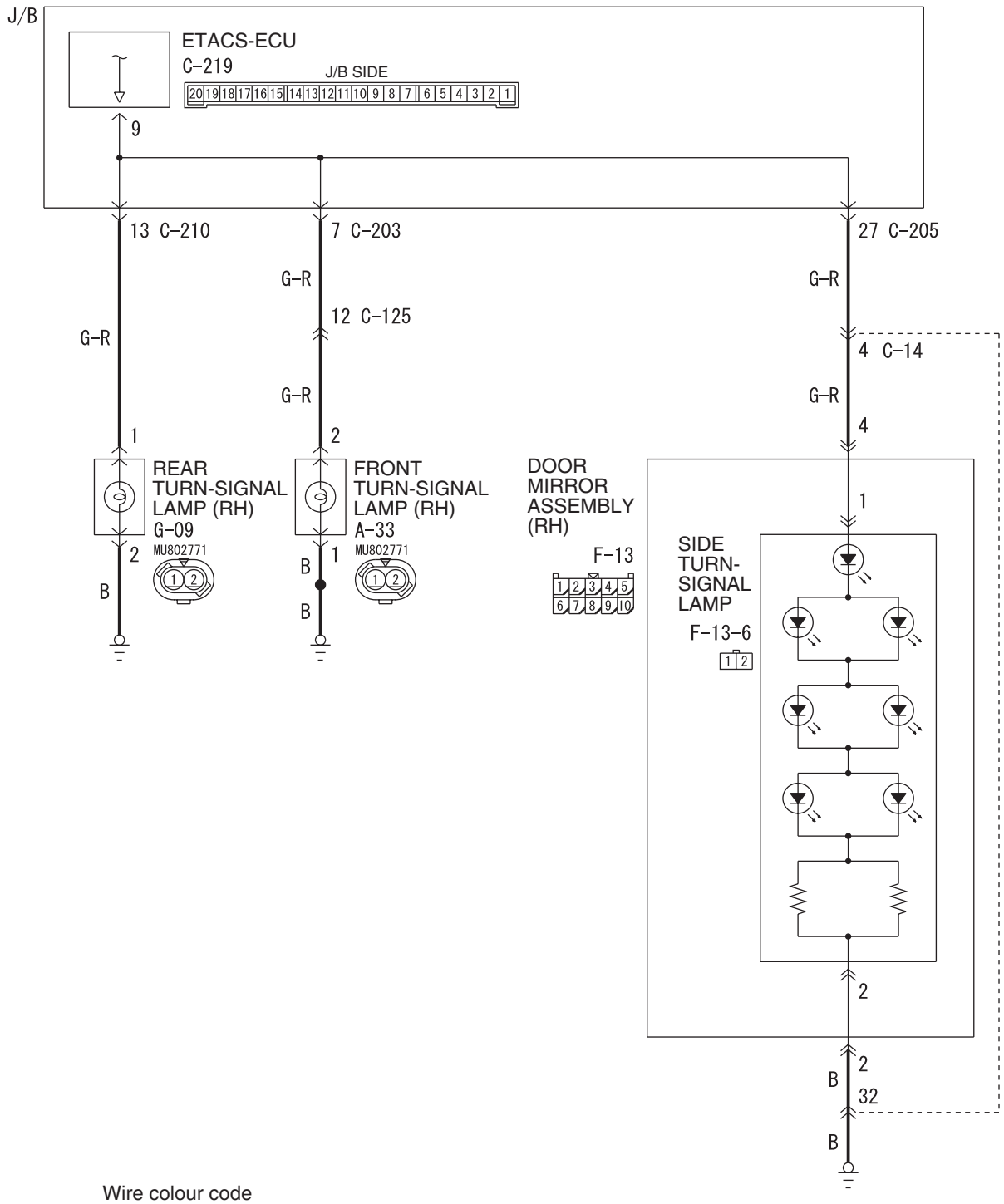

Wire colour code
B : Black LG : Light green G : Green L : Blue W : White Y : Yellow SB : Sky blue
BR : Brown O : Orange GR : Grey R : Red P : Pink V : Violet PU : Purple

W6X54X013A

Main Index
Group TOC

Right Turn-Signal Lamps Circuit <RHD>

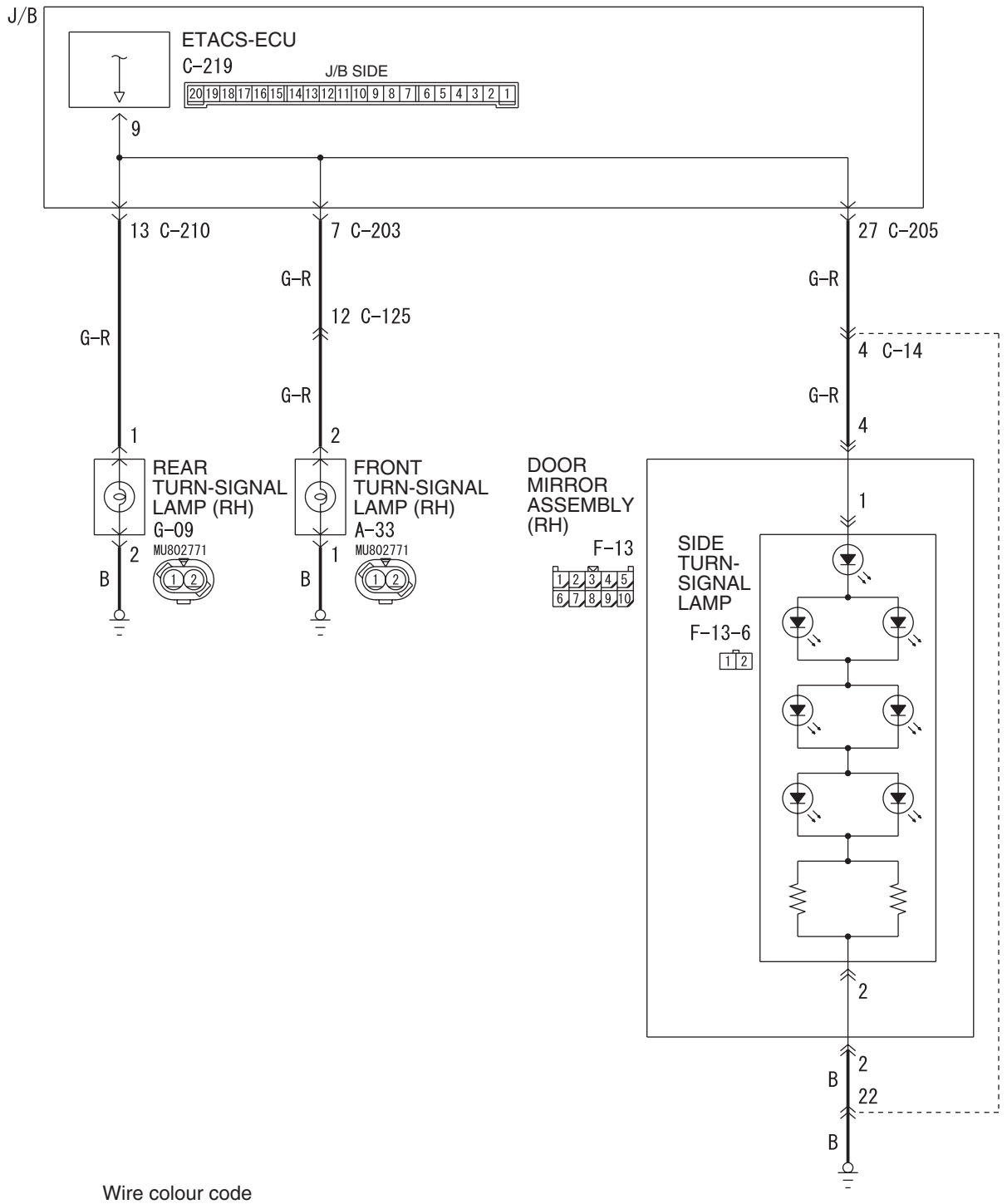

Wire colour code
B : Black LG : Light green G : Green L : Blue W : White Y : Yellow SB : Sky blue
BR : Brown O : Orange GR : Grey R : Red P : Pink V : Violet PU : Purple

W6X54X012A

COMMENTS ON TROUBLE SYMPTOM

If any of the turn-signal lamp does not illuminate normally, wiring harness connector(s) or the bulb may be defective.

POSSIBLE CAUSES

- Defective turn-signal lamp bulb
- Damaged harness wires and connectors

DIAGNOSTIC PROCEDURE

Step 1. Confirm which turn-signal lamp is defective.

Q: Which turn-signal lamp fails to illuminate correctly?
Front turn-signal lamp : Go to Step 2.
Side turn-signal lamp : Go to Step 6.
Rear turn-signal lamp : Go to Step 11.

Step 2. Connector check: A-33 front turn-signal lamp (RH) or A-23 front turn-signal lamp (LH) connector.

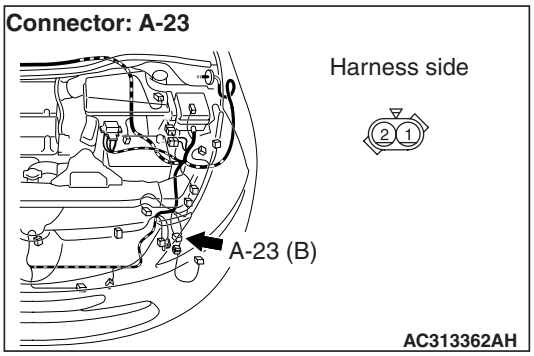

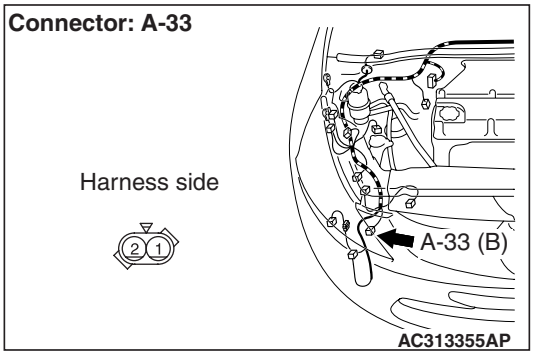

Q: Is the check result normal?
YES : Go to Step 3.
NO : Repair the defective connector.

Step 3. Check the bulb(s) of the turn-signal lamps.

Check the bulb(s) of the defective lamp.

Q: Is the check result normal?
YES : Go to Step 4.
NO : Replace the bulb(s) of the defective lamp.

Step 4. Resistance measurement at the A-33 front turn-signal lamp (RH) or A-23 front turn-signal lamp (LH) connector.

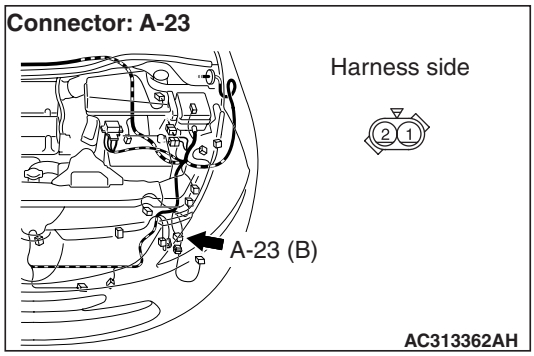

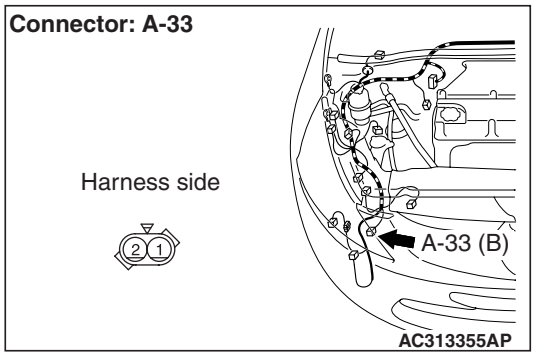

(1) Disconnect the connector, and measure at the wiring harness side.

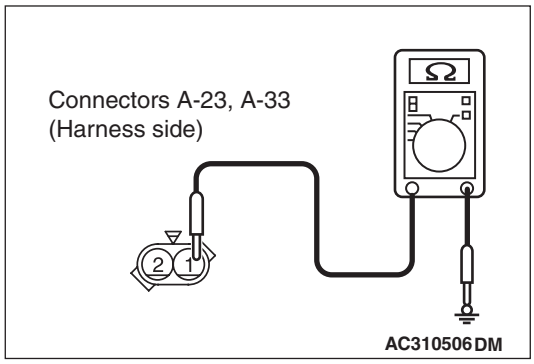

(2) Measure the resistance between the defective lamp connector terminal and body earth.
- Resistance between A-33 front turn-signal lamp (RH) connector terminal No.1 and body earth
- Resistance between A-23 front turn-signal lamp (LH) connector terminal No.1 and body earth

OK: 2 Ω or less

Q: Is the check result normal?
YES : Go to Step 15.
NO : Go to Step 5.

Main Index
Group TOC

Step 5. Check the wiring harness from A-33 front turn-signal lamp (RH) connector terminal No.1 and body earth or A-23 front turn-signal lamp (LH) connector terminal No.1 and body earth.

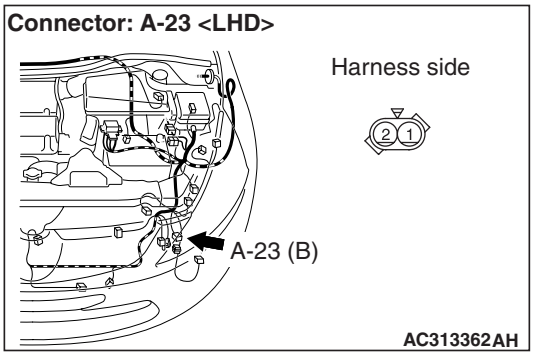

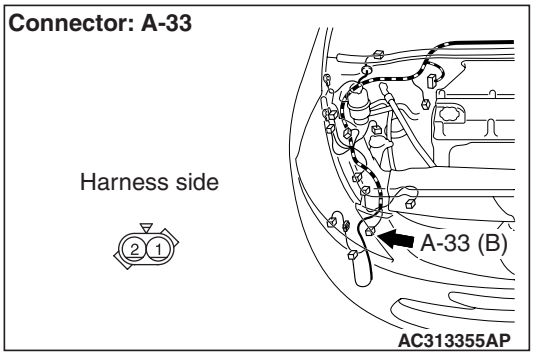

- Check the earth wires for open circuit.

Q: Is the check result normal?
YES : The trouble can be an intermittent malfunction (Refer to GROUP 00 – How to Cope with Intermittent Malfunction P.00-5).
NO : Repair the wiring harness.

Step 6. Connector check: F-13-6 side turn-signal lamp (RH) or F-07-6 side turn-signal lamp (LH) connector.

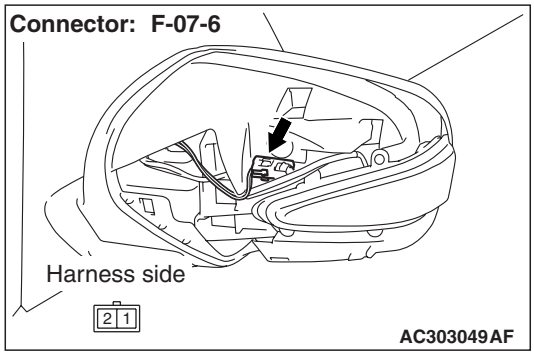

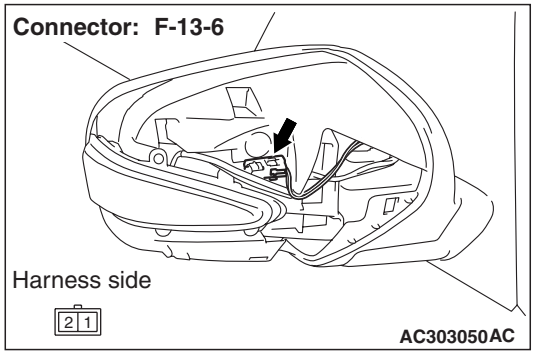

Q: Is the check result normal?
YES : Go to Step 7.
NO : Repair the defective connector.

Main Index
Group TOC

Step 7. Resistance measurement at the F-13-6 side turn-signal lamp (RH) or F-07-6 side turn-signal lamp (LH) connector.

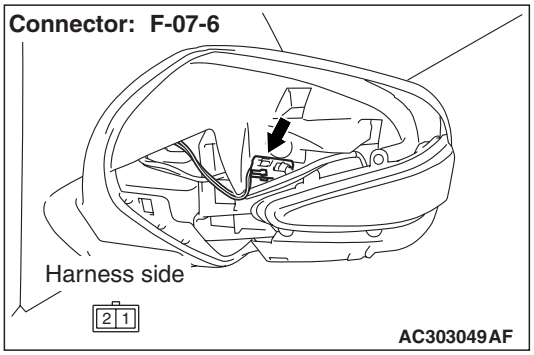

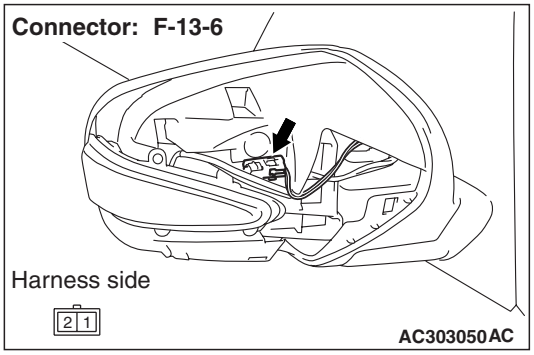

(1) Disconnect the connector, and measure at the wiring harness side.

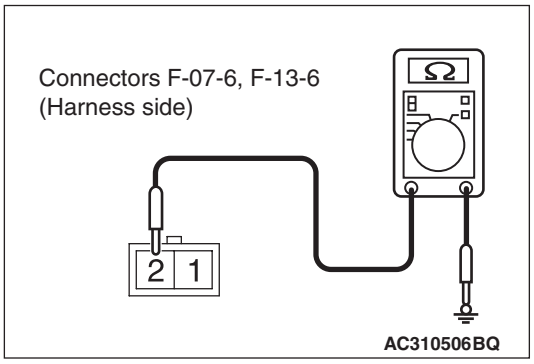

(2) Measure the resistance between the defective lamp connector terminal and body earth.
- Resistance between F-13-6 side turn-signal lamp (RH) connector terminal No.2 and body earth
- Resistance between F-07-6 side turn-signal lamp (LH) connector terminal No.2 and body earth

OK: 2 Ω or less

Q: Is the check result normal?
YES : Go to Step 18.
NO : Go to Step 8.

Step 8. Connector check: F-13 door mirror assembly (RH) or F-07 door mirror assembly (LH) connector.

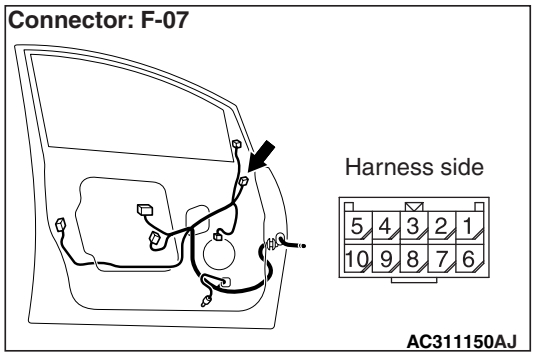

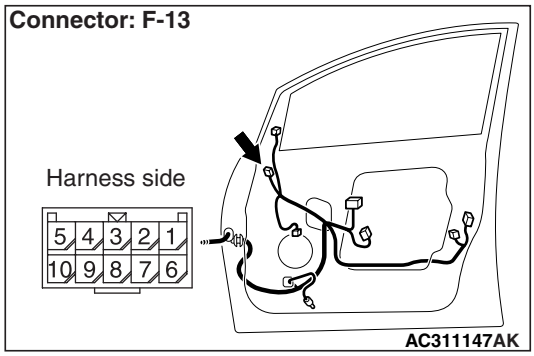

Q: Is the check result normal?
YES : Go to Step 9.
NO : Repair the defective connector.

Main Index
Group TOC

Step 9. Resistance measurement at the F-13 door mirror assembly (RH) or F-07 door mirror assembly (LH) connector.

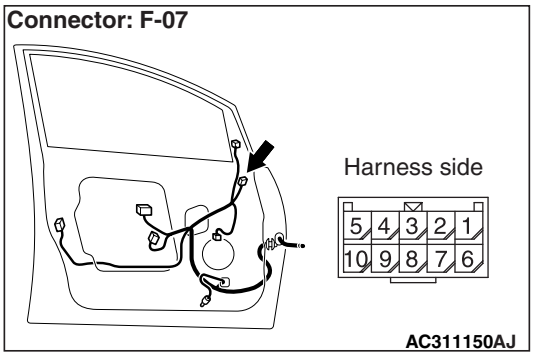

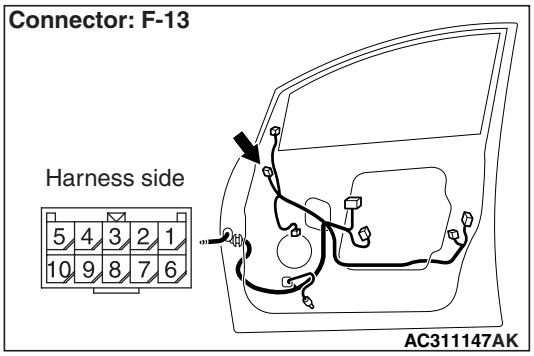

(1) Disconnect the connector, and measure at the wiring harness side.

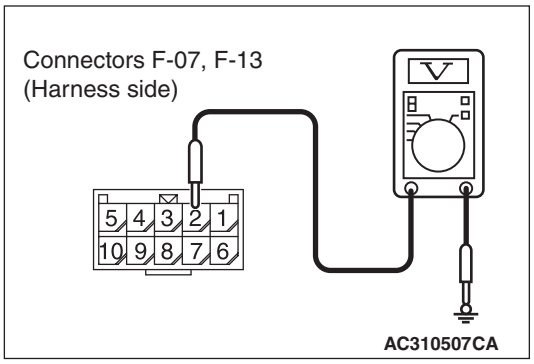

(2) Measure the resistance between the defective lamp connector terminal and body earth.
- Resistance between F-13 door mirror assembly (RH) connector terminal No.2 and body earth
- Resistance between F-07 door mirror assembly (LH) connector terminal No.2 and body earth

OK: 2 Ω or less

Q: Is the check result normal?

YES : Repair the wiring harness in the door mirror assembly.

NO : Go to Step 10.

Step 10. Check the wiring harness from F-13 door mirror assembly (RH) or F-07 door mirror assembly (LH) connector terminal No.2 and body earth.

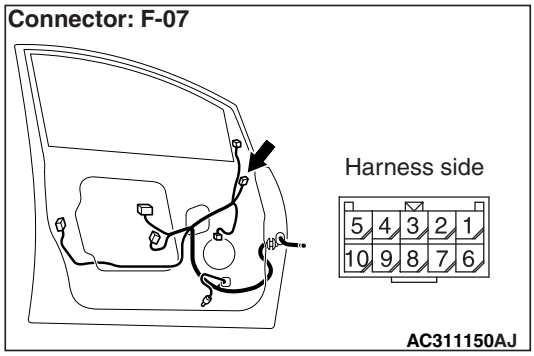

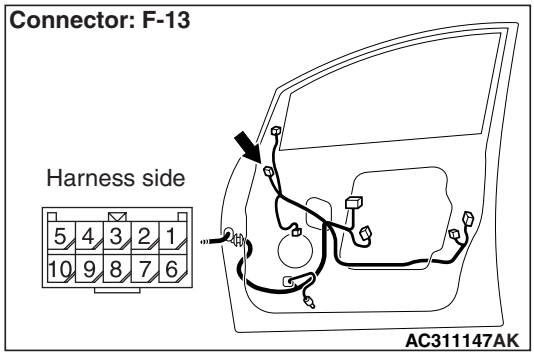

NOTE:

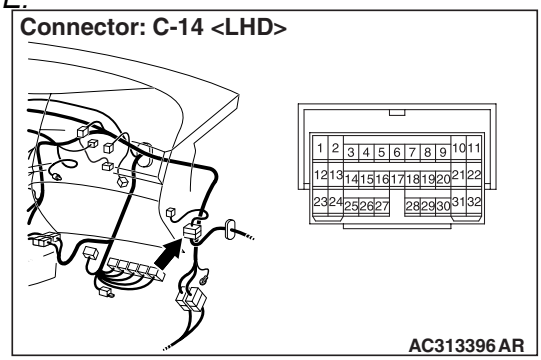

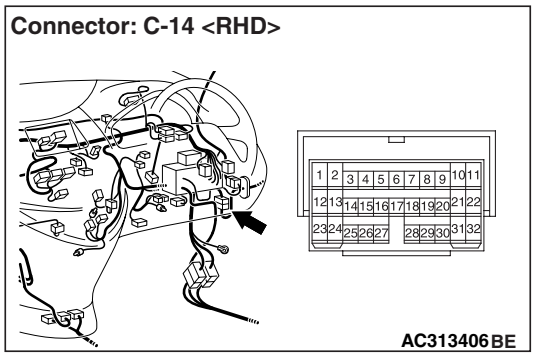

Main Index
Group TOC

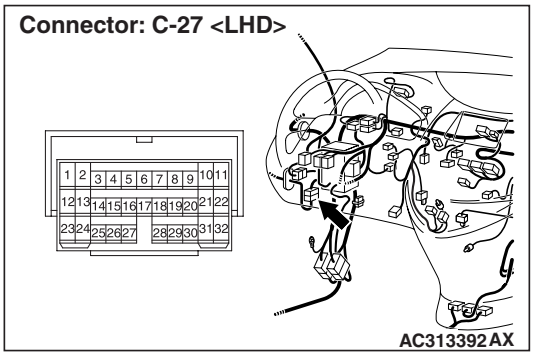

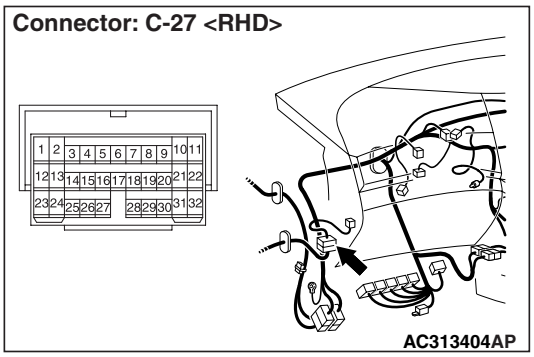

Prior to the wiring harness inspection, check intermediate connector C-14 <side turn-signal lamp (RH)>, C-27 <side turn-signal lamp (LH)>, and repair if necessary.

- Check the earth wires for open circuit.

Q: Is the check result normal?
YES : The trouble can be an intermittent malfunction (Refer to GROUP 00 – How to Cope with Intermittent Malfunction P.00-5).
NO : Repair the wiring harness.

Step 11. Connector check: G-09 rear turn-signal lamp (RH) or G-25 rear turn-signal lamp (LH) connector.

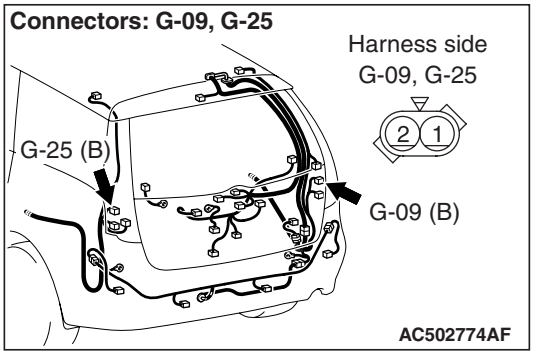

Q: Is the check result normal?
YES : Go to Step 12.
NO : Repair the defective connector.

Step 12. Check the bulb(s) of the turn-signal lamps.

Check the bulb(s) of the defective lamp.

Q: Is the check result normal?
YES : Go to Step 13.
NO : Replace the bulb(s) of the defective lamp.

Step 13. Resistance measurement at the G-09 rear turn-signal lamp (RH) or G-25 rear turn-signal lamp (LH) connector.

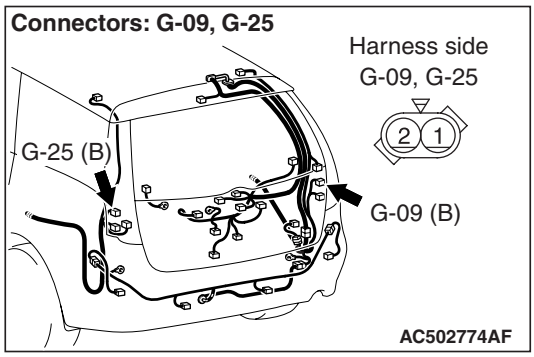

(1) Disconnect the connector, and measure at the wiring harness side.

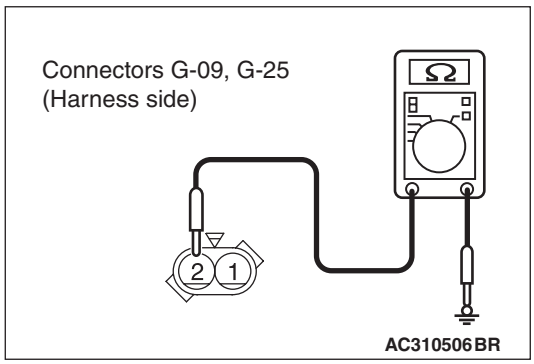

(2) Measure the resistance between the defective lamp connector terminal and body earth.
- Resistance between G-09 rear turn-signal lamp (RH) connector terminal No.2 and body earth
- Resistance between G-25 rear turn-signal lamp (LH) connector terminal No.2 and body earth

OK: 2 Ω or less

Q: Is the check result normal?
YES : Go to Step 22.
NO : Go to Step 14.

Main Index
Group TOC

Step 14. Check the wiring harness from G-09 rear turn-signal lamp (RH) or G-25 rear turn-signal lamp (LH) connector terminal No.2 and body earth.

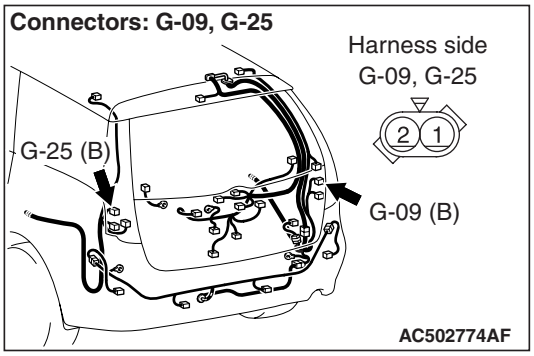

- Check the earth wires for open circuit.

Q: Is the check result normal?
YES : The trouble can be an intermittent malfunction (Refer to GROUP 00 – How to Cope with Intermittent Malfunction P.00-5).
NO : Repair the wiring harness.

Step 15. Connector check: C-219 ETACS-ECU connector

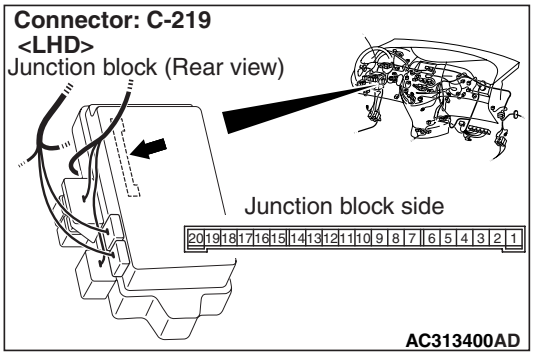

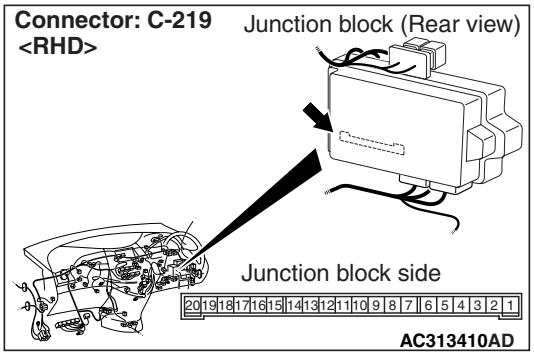

Q: Is the check result normal?
YES : Go to Step 16.
NO : Repair the defective connector.

Step 16. Check the wiring harness from the A-33 front turn-signal lamp (RH) connector terminal No.2 to C-219 ETACS-ECU connector terminal No.9 or A-23 front turn-signal lamp (LH) connector terminal No.2 to C-219 ETACS-ECU connector terminal No.14.

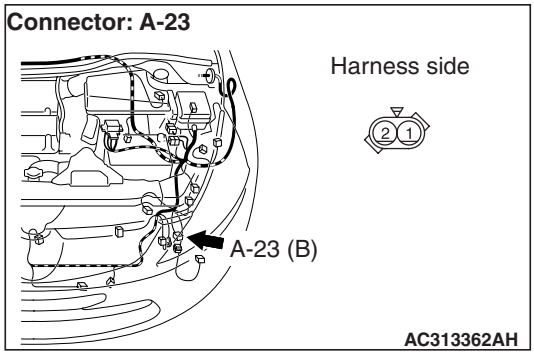

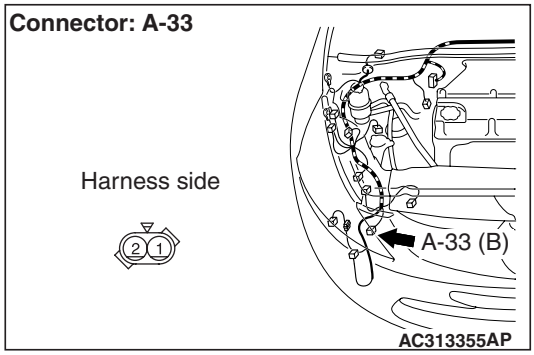

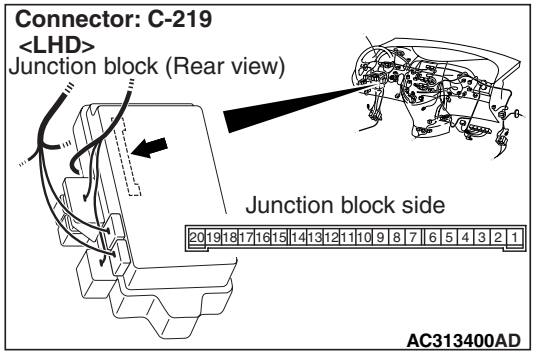

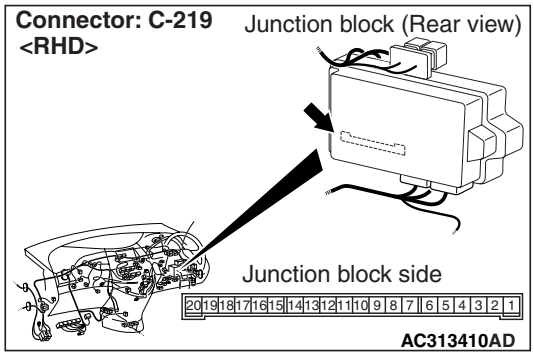

Main Index
Group TOC

NOTE:

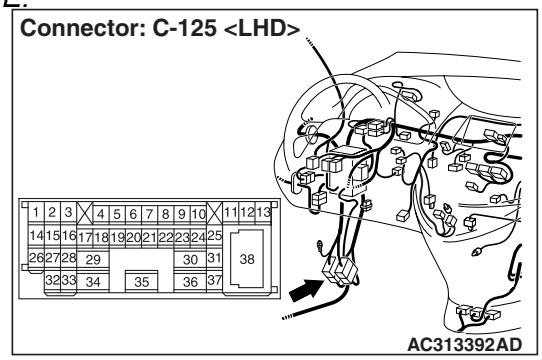

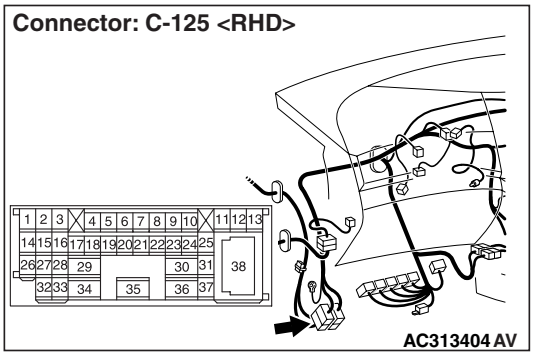

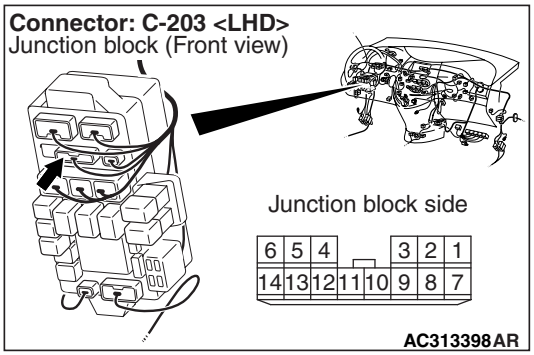

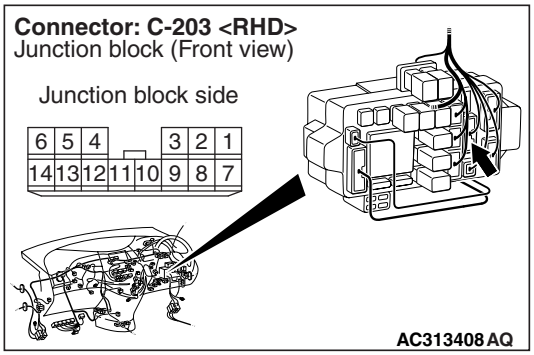

Prior to the wiring harness inspection, check intermediate connector C-125 and junction block connector C-203, and repair if necessary.

- Check the output lines for open circuit.

Q: Is the check result normal?

YES : Go to Step 17.

NO : Repair the wiring harness.

Step 17. Retest the system.

Check that the turn-signal lamps illuminate normally.

Q: Is the check result normal?

YES : The trouble can be an intermittent malfunction (Refer to GROUP 00 – How to Cope with Intermittent Malfunction P.00-5).

NO : Replace the headlamp assembly.

Step 18. Connector check: C-219 ETACS-ECU connector

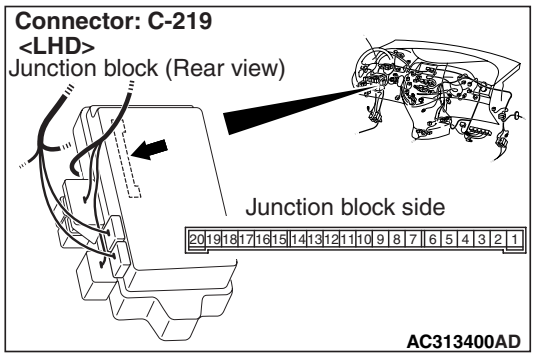

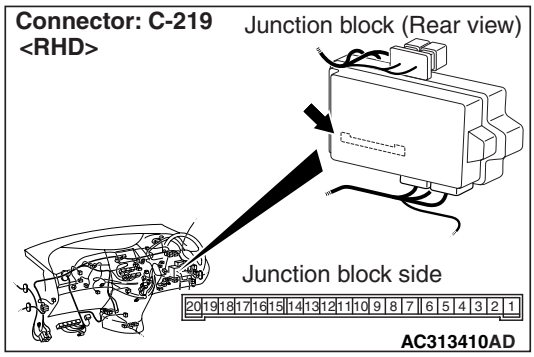

Q: Is the check result normal?

YES : Go to Step 19.

NO : Repair the defective connector.

Main Index
Group TOC

Step 19. Connector check: F-13 door mirror assembly (RH) or F-07 door mirror assembly (LH) connector.

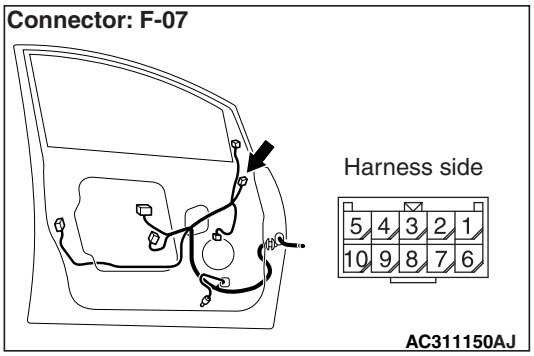

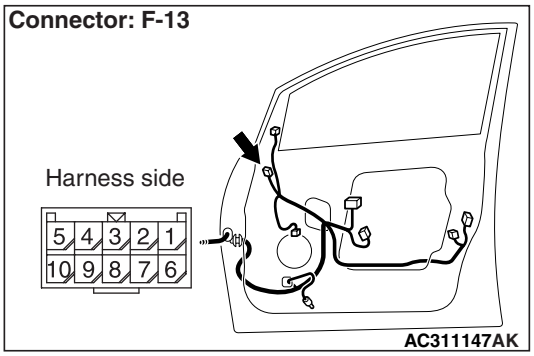

Q: Is the check result normal?
YES : Go to Step 20.
NO : Repair the defective connector.

Step 20. Check the wiring harness from the F-13-6 side turn-signal lamp (RH) connector terminal No.1 to C-219 ETACS-ECU connector terminal No.9 or F-07-6 side turn-signal lamp (LH) connector terminal No.1 to C-219 ETACS-ECU connector terminal No.14.

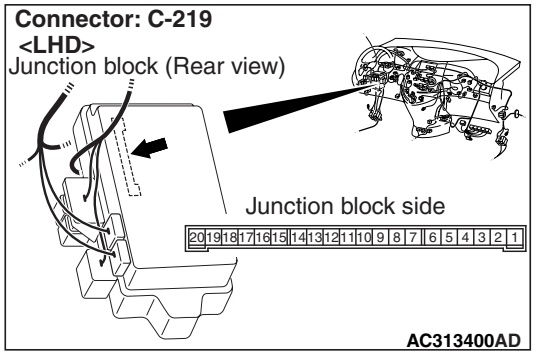

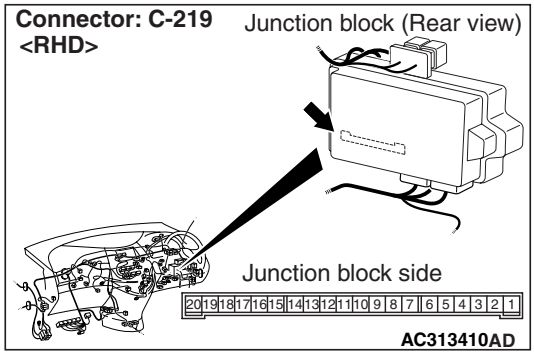

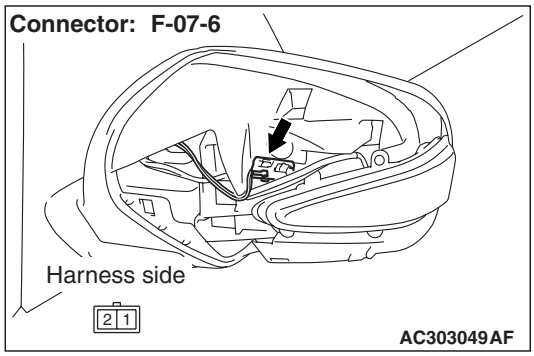

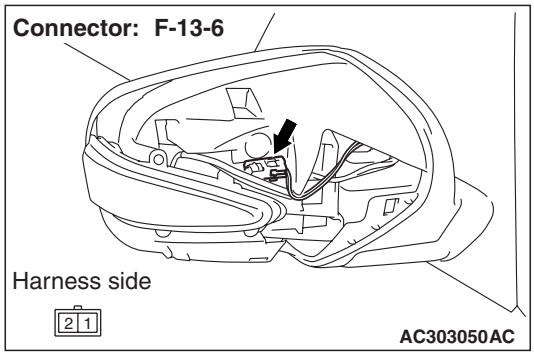

Main Index
Group TOC

NOTE:

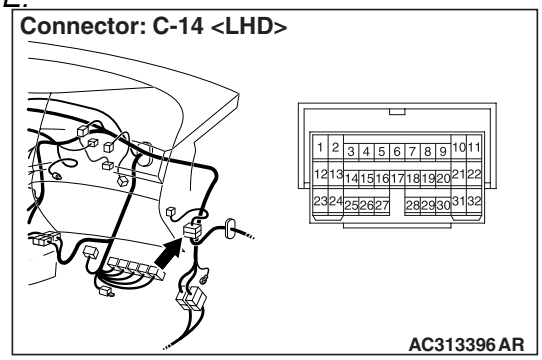

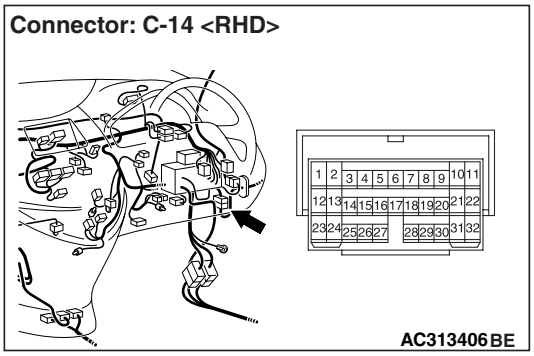

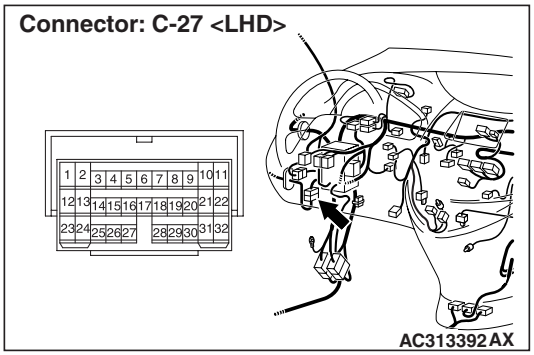

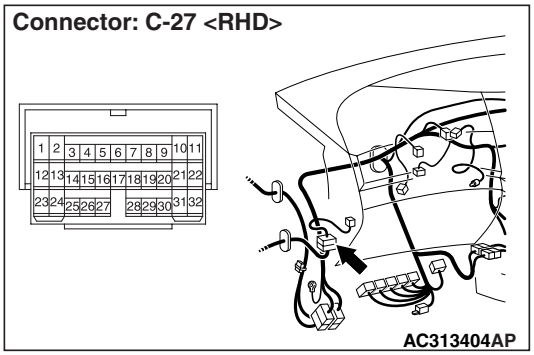

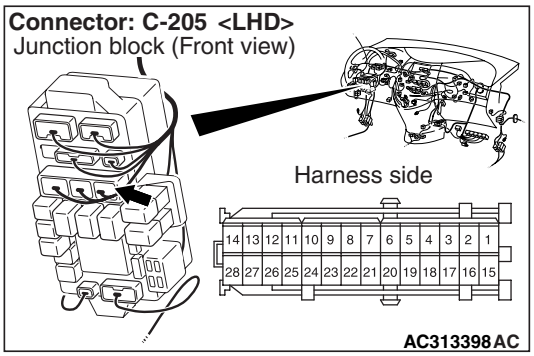

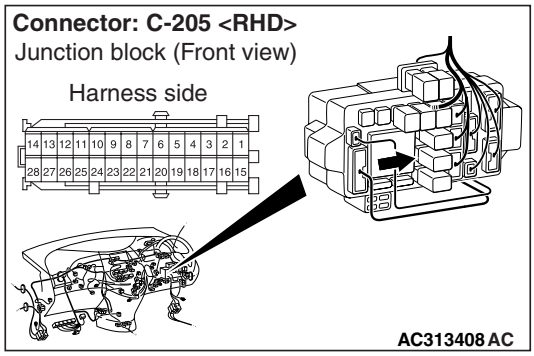

Prior to the wiring harness inspection, check intermediate connector C-14 <side turn-signal lamp (RH)> or C-27 <side turn-signal lamp (LH)> and junction block connector C-205, and repair if necessary.

- Check the output lines for open circuit.

Q: Is the check result normal?
YES : Go to Step 22.
NO : Repair the wiring harness.

Step 21. Retest the system.

Check that the side turn-signal lamps illuminate normally.

Q: Is the check result normal?
YES : The trouble can be an intermittent malfunction (Refer to GROUP 00 – How to Cope with Intermittent Malfunction P.00-5).
NO : Replace the side turn-signal lamp.

Main Index
Group TOC

Step 22. Connector check: C-219 ETACS-ECU connector

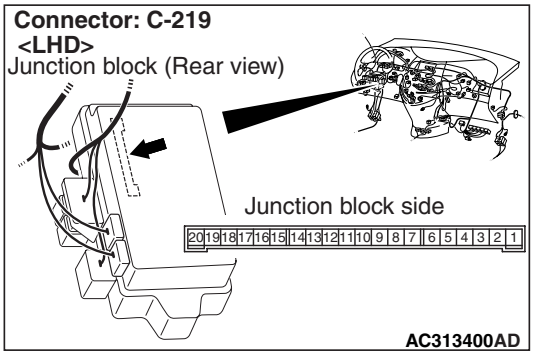

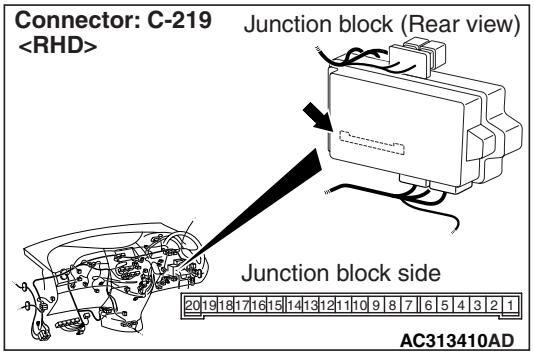

Q: Is the check result normal?

YES : Go to Step 23.

NO : Repair the defective connector.

Step 23. Check the wiring harness from the G-09 rear turn-signal lamp (RH) connector terminal No.1 to C-219 ETACS-ECU connector terminal No.9 or G-25 rear turn-signal lamp (LH) connector terminal No.1 to C-219 ETACS-ECU connector terminal or No.14.

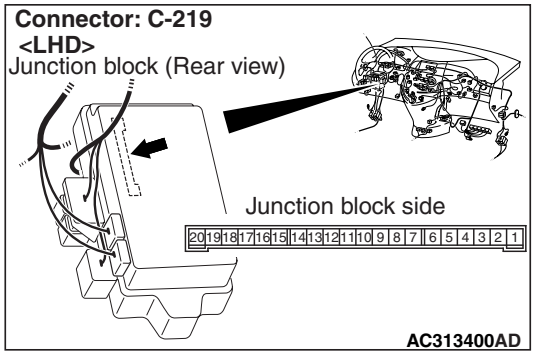

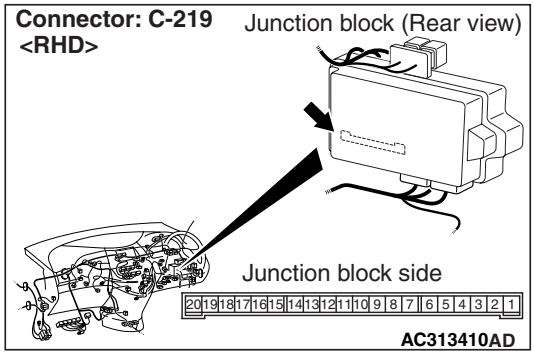

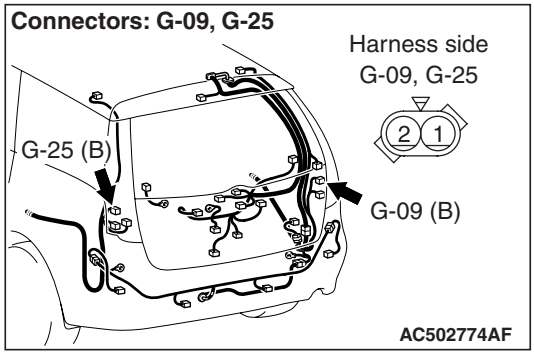

NOTE:

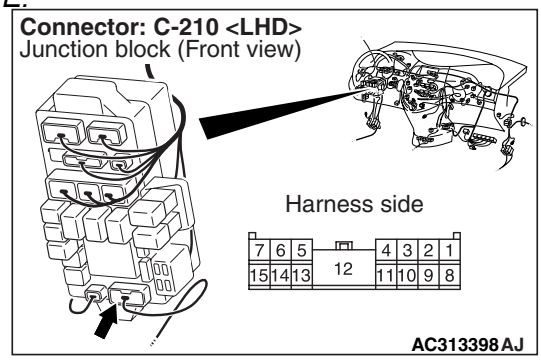

Main Index
Group TOC

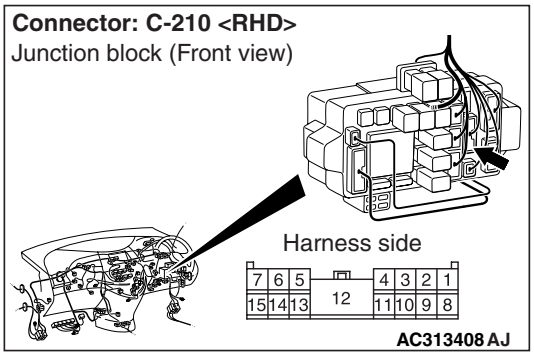

Prior to the wiring harness inspection, check junction block connector C-210, and repair if necessary.

- Check the output lines for open circuit.

Q: Is the check result normal?

YES : . Go to Step 24.

NO : . Repair the wiring harness.

Step 24. Retest the system.

Check that the turn-signal lamps illuminate normally.

Q: Is the check result normal?

YES : The trouble can be an intermittent malfunction (Refer to GROUP 00 – How to Cope with Intermittent Malfunction P.00-5).

NO : Replace the rear turn-signal lamp assembly.

INSPECTION PROCEDURE M-4: The turn-signal indicator lamp does not illuminate.

⚠ CAUTION

Whenever the ECU is replaced, ensure that the input and output signal circuits are normal.

Turn-Signal Indicator Lamp Circuit

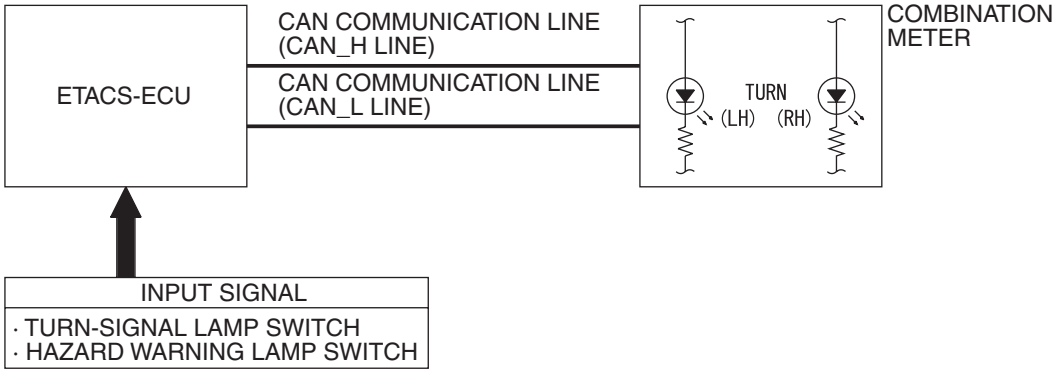

W4X54E190A

COMMENTS ON TROUBLE SYMPTOM

If the turn-signal indicator lamp does not illuminate normally, connector(s), wiring harness in the CAN bus lines, the ETACS-ECU or the combination meter may be defective.

POSSIBLE CAUSES

- The CAN bus line is defective.
- The combination meter may be defective
- The ETACS-ECU may be defective
- Damaged harness wires and connectors

DIAGNOSIS PROCEDURE

Step 1. Check that the hazard warning lamps operate.

Check that the hazard warning lamps illuminate normally.

Q: Is the check result normal?

YES : Go to Step 2.

NO : First, repair the headlamps. Refer to Inspection Procedure M-2 "The hazard warning lamps do not illuminate normally P.54B-257."

Main Index
Group TOC

Step 2. M.U.T.-III CAN bus diagnostics.
Use the M.U.T.-III to diagnose the CAN bus lines.

Q: Is the check result normal?
YES : Go to Step 3.
NO : Repair the CAN bus line (Refer to GROUP 54F, Diagnosis P.54F-13).

Step 3. Check for combination meter diagnosis code.
Check whether the combination meter-related diagnosis code is set.

Q: Is the diagnosis code set?
YES : Diagnose the combination meter (Refer to GROUP 54A – Troubleshooting P.54A-55).
NO : Go to Step 4.

Step 4. M.U.T.-III actuator test
Perform the actuator test for the combination meter, and check that the turn-signal indicator lamps illuminate (Refer to GROUP 54A – Combination Meter P.54A-95).

Q: Is the check result normal?
YES : Replace the ETACS-ECU.
NO : Replace the combination meter.

FOG LAMP

INSPECTION PROCEDURE N-1: The front fog lamps do not illuminate normally.

⚠ CAUTION
Whenever the ECU is replaced, ensure that the input and output signal circuits are normal.

Front Fog Lamp Relay Circuit

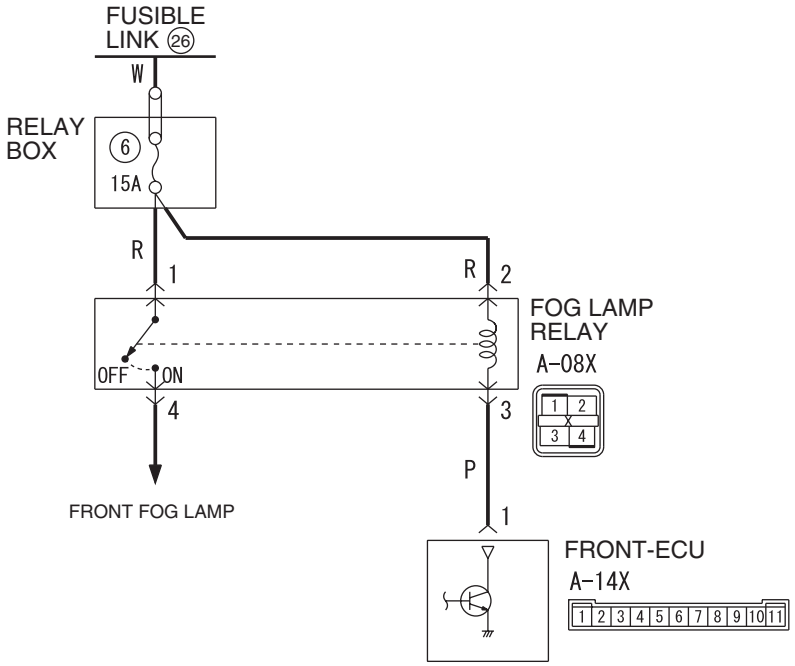

Wire colour code
B : Black LG : Light green G : Green L : Blue W : White Y : Yellow SB : Sky blue
BR : Brown O : Orange GR : Grey R : Red P : Pink V : Violet PU : Purple

W6X54X040A

Main Index
Group TOC

OPERATION

The ETACS-ECU operates this function in accordance with the input signals below.

- Tail lamp switch
- Headlamp switch
- Fog lamp switch

If the front fog lamps do not illuminate normally, these input signal circuit(s) or the ETACS-ECU may be defective.

POSSIBLE CAUSES

- Malfunction of the column switch
- Malfunction of the fog lamp switch
- Malfunction of the ETACS-ECU
- Damaged harness wires and connectors

DIAGNOSTIC PROCEDURE

Step 1. Check that the tail/stop lamps and headlamps operate.

Check that the tail/stop lamps and headlamps illuminate normally.

Q: Is the check result normal?

YES : Go to Step 2.

NO : Check the tail/stop lamps and the headlamps (Refer to trouble symptom chart P.54B-58).

Step 2. Pulse check

Check the input signals below, which are related to the front fog lamps.

System switch	Check condition
Ignition switch (IG1)	When turned from ACC to ON
Tail lamp switch	When the lighting switch is turned to the TAIL position
Headlamp switch	When the lighting switch is turned to the HEADLAMP position
Front fog lamp switch	When the front fog lamp switch is turned from off to on

OK: The M.U.T.-III sounds or the voltmeter needle fluctuates.

Q: Is the check result normal?

All the signals are received normally. : Go to Step 3.

The ignition switch (IG1) signal is not received. : Refer to inspection procedure P-2 "The ignition switch (IG1) signal is not received P.54B-322."

The tail lamp switch signal is not received. : Refer to inspection procedure P-6 "The column switch (lighting and turn-signal lamp switch) signal is not received P.54B-337."

The headlamp switch signal is not received. : Refer to inspection procedure P-6 "The column switch (lighting and turn-signal lamp switch) signal is not received P.54B-337."

The front fog lamp switch signal is not received. : Refer to inspection procedure P-4 "The front fog lamp switch signal is not received P.54B-329."

Step 3. Connector check: A-08X front fog lamp relay connector.

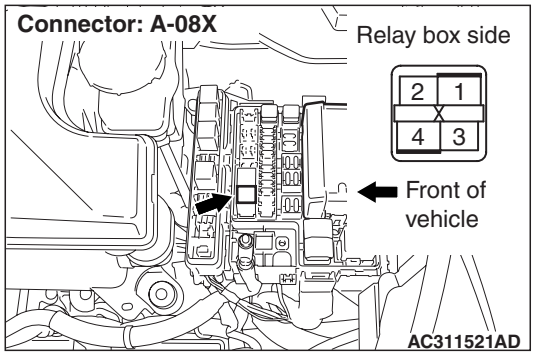

Q: Is the check result normal?

YES : Go to Step 4.

NO : Repair the defective connector.

Step 4. Check the front fog lamp relay.

Refer to GROUP 54A – front fog lamp P.54A-149.

Q: Is the check result normal?

YES : Go to Step 5.

NO : Replace the front fog lamp relay.

Main Index
Group TOC

Step 5. Voltage measurement at the A-08X front fog lamp relay connector.

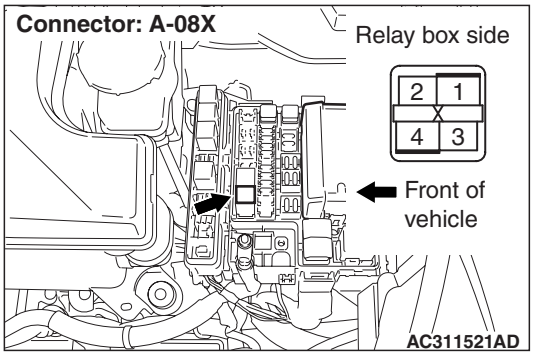

(1) Remove the front fog lamp relay, and measure at the relay box side.

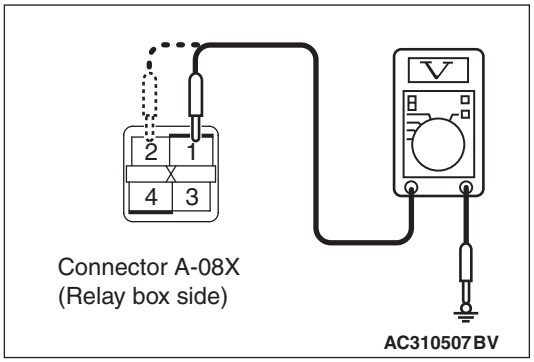

(2) Check the voltage between the front fog lamp relay connector and body earth.
- Voltage between A-08X front fog lamp relay connector terminal No.1 and body earth
- Voltage between A-08X front fog lamp relay connector terminal No.2 and body earth

OK: System voltage

Q: Is the check result normal?
YES : Go to Step 7.
NO : Go to Step 6.

Step 6. Check the wiring harness between A-08X front fog lamp relay connector (terminal Nos.1 and 2) and the fusible link (26).

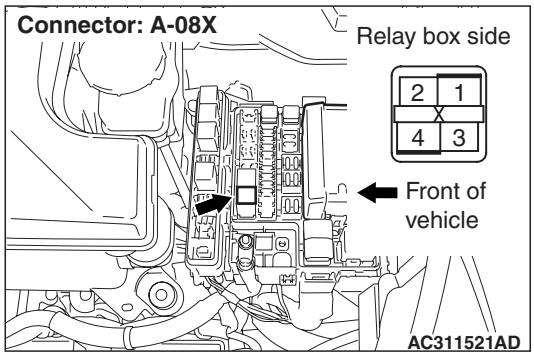

- Check the power supply line for open circuit.

Q: Is the check result normal?
YES : The trouble can be an intermittent malfunction (Refer to GROUP 00 – How to Cope with Intermittent Malfunction P.00-5).
NO : Repair the wiring harness.

Step 7. Connector check: A-14X front-ECU connector

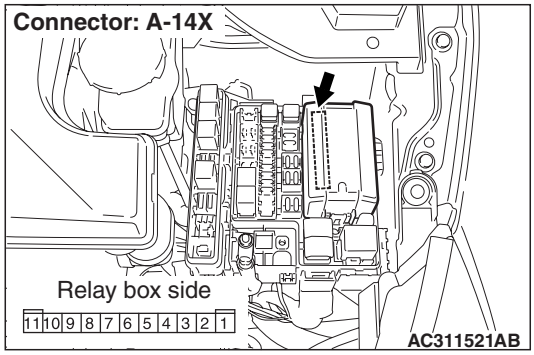

Q: Is the check result normal?
YES : Go to Step 8.
NO : Repair the defective connector.

Main Index
Group TOC

Step 8. Check the wiring harness between A-08X front fog lamp relay connector terminal No.3 and A-14X front-ECU connector terminal No.1.

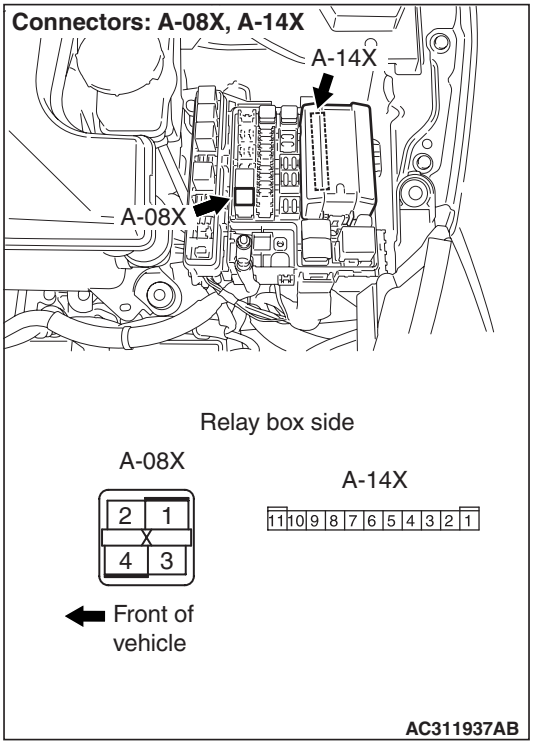

- Check the output lines for open circuit.

Q: Is the check result normal?
YES : . Go to Step 9.
NO : . Repair the wiring harness.

Step 9. Retest the system.
Check that the front fog lamps illuminate normally.

Q: Is the check result normal?
YES : The trouble can be an intermittent malfunction (Refer to GROUP 00 – How to Cope with Intermittent Malfunction P.00-5).
NO : Replace the ETACS-ECU.

Main Index
Group TOC

INSPECTION PROCEDURE N-2: Any of the front fog lamps does not illuminate normally.

⚠ CAUTION
Whenever the ECU is replaced, ensure that the input and output signal circuits are normal.

Front Fog Lamps Circuit

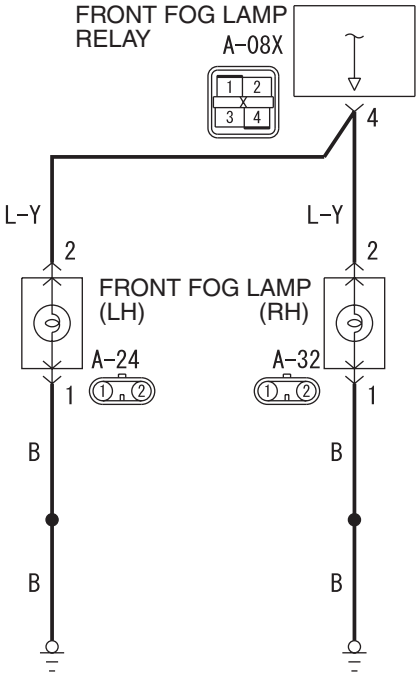

Wire colour code
B : Black LG : Light green G : Green L : Blue W : White Y : Yellow SB : Sky blue
BR : Brown O : Orange GR : Grey R : Red P : Pink V : Violet PU : Purple

W6X54X041A

COMMENTS ON TROUBLE SYMPTOM

If any of the front fog lamps do not illuminate, the wiring harness connector(s), the bulb or the fuse may be defective or burned out.

POSSIBLE CAUSES

- Burned-out front fog lamp bulb
- Damaged harness wires and connectors

Main Index
Group TOC

DIAGNOSTIC PROCEDURE

Step 1. Connector check: A-32 front fog lamp (RH) connector or A-24 front fog lamp (LH) connector

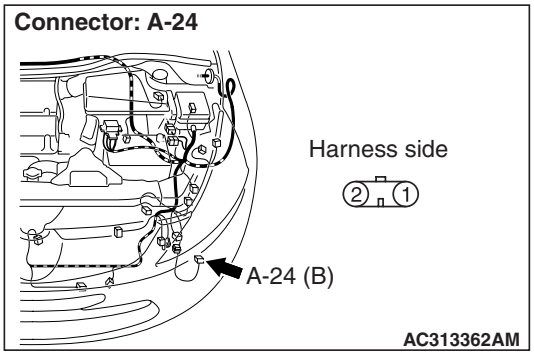

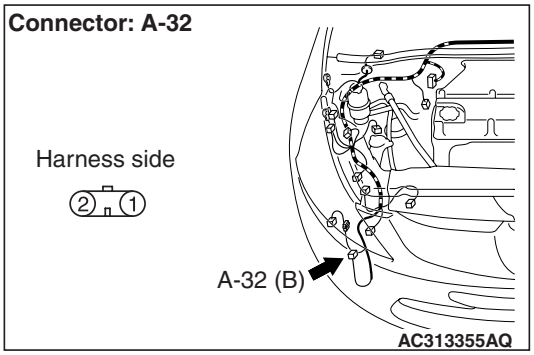

Q: Is the check result normal?
YES : Go to Step 2.
NO : Repair the defective connector.

Step 2. Check the bulbs of the front fog lamps.
Check the bulb(s) of the defective lamp.

Q: Is the check result normal?
YES : Go to Step 3.
NO : Replace the bulb(s) of the defective lamp.

Step 3. Resistance measurement at A-32 front fog lamp (RH) connector or A-24 front fog lamp (LH) connector.

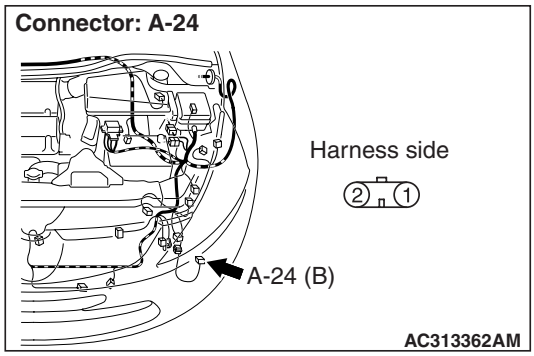

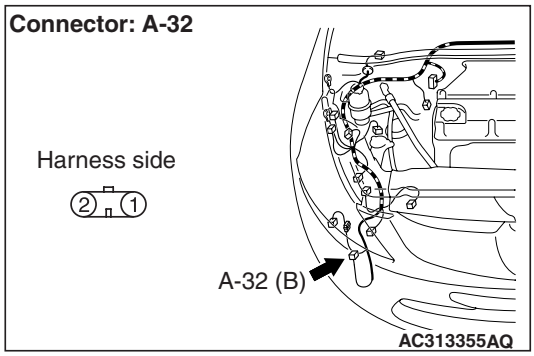

(1) Disconnect the connector, and measure at the wiring harness side.
(2) Check the resistance between the lamp connector and body earth.

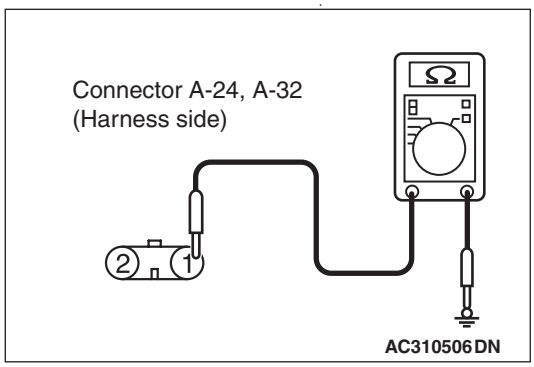

Resistance between A-32 front fog lamp (RH) connector terminal No.1 and body earth
- Resistance between A-24 front fog lamp (LH) connector terminal No.1 and body earth

OK: 2 Ω or less

Q: Is the check result normal?
YES : Go to Step 5.
NO : Go to Step 4.

Main Index
Group TOC

Step 4. Check the wiring harness from A-32 front fog lamp (RH) connector or A-24 front fog lamp (LH) connector terminal No.1 to body earth.

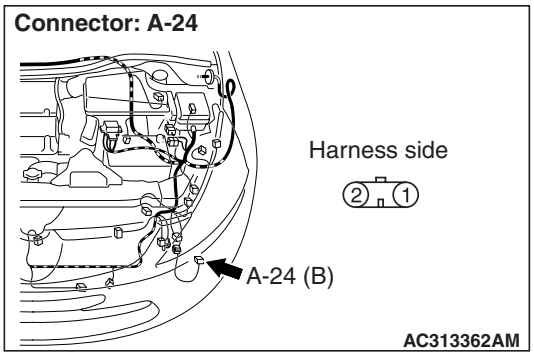

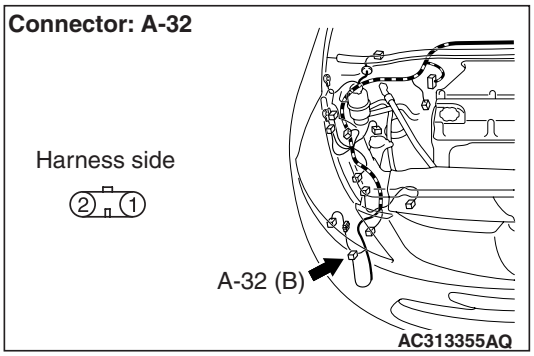

- Check the earth wires for open circuit.

Q: Is the check result normal?
YES : The trouble can be an intermittent malfunction (Refer to GROUP 00 – How to Cope with Intermittent Malfunction P.00-5).
NO : Repair the wiring harness.

Step 5. Connector check: A-08X front fog lamp relay connector

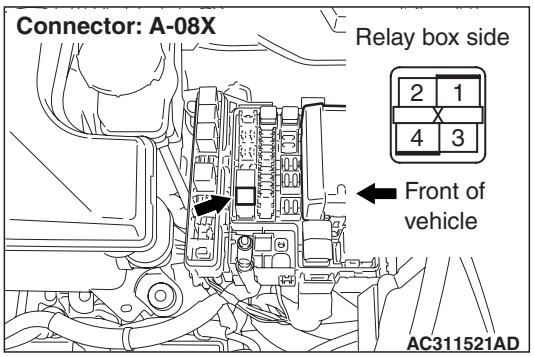

Q: Is the check result normal?
YES : Go to Step 6.
NO : Repair the defective connector.

Step 6. Check the wiring harness from A-32 front fog lamp (RH) connector or A-24 front fog lamp (LH) connector terminal No.2 to A-08X front fog lamp relay connector terminal No.4.

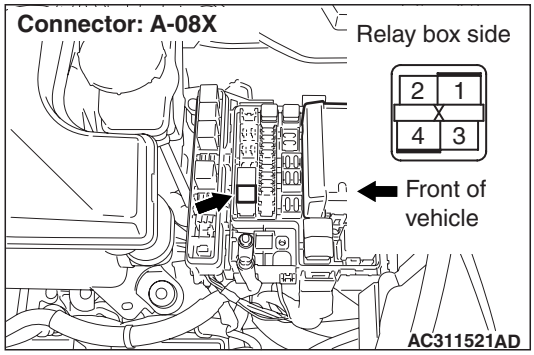

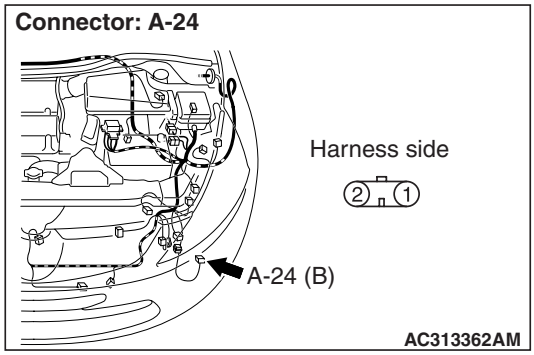

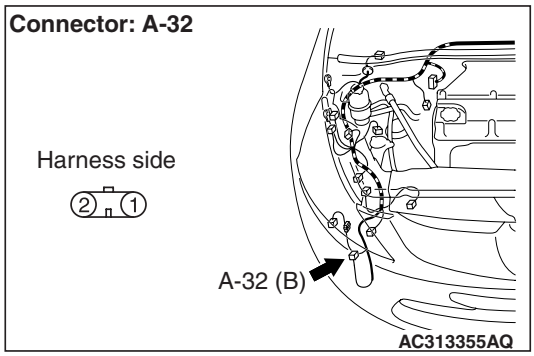

- Check the output lines for open circuit.

Q: Is the check result normal?
YES : Go to Step 7.
NO : Repair the wiring harness.

Step 7. Retest the system.
Check that the front fog lamp illuminate normally.

Q: Is the check result normal?
YES : The trouble can be an intermittent malfunction (Refer to GROUP 00 – How to Cope with Intermittent Malfunction P.00-5).
NO : Replace the front fog lamp(s).

Main Index
Group TOC

Inspection Procedure N-3: The front fog lamp indicator does not illuminate normally.

⚠ CAUTION
Whenever the ECU is replaced, ensure that the input and output signal circuits are normal.

Front Fog Lamp Indicator Lamp Circuit

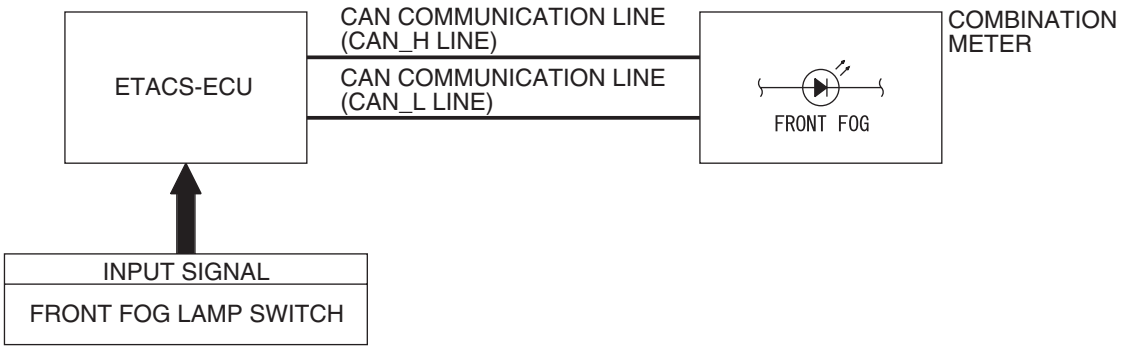

W4X54X174A

COMMENTS ON TROUBLE SYMPTOM

If the front fog lamp indicator does not illuminate normally, connector(s), wiring harness in the CAN bus lines, the ETACS-ECU or the combination meter may be defective.

POSSIBLE CAUSES

- The CAN bus line is defective.
- The combination meter may be defective
- The ETACS-ECU may be defective
- Damaged harness wires and connectors

DIAGNOSIS PROCEDURE

Step 1. Check the front fog lamps.
When the front fog lamp switch is operated, check that the front fog lamps illuminate/go off normally.

Q: Is the check result normal?
YES : Go to Step 2.
NO : First, repair the front fog lamps. Refer to Inspection Procedure N-2 "Any of the front fog lamps does not illuminate P.54B-278."

Step 2. M.U.T.-III CAN bus diagnostics.
Use the M.U.T.-III to diagnose the CAN bus lines.

Q: Is the check result normal?
YES : Go to Step 3.
NO : Repair the CAN bus line (Refer to GROUP 54F, Diagnosis P.54F-13).

Step 3. Check for combination meter diagnosis code.
Check whether the combination meter-related diagnosis code is set.

Q: Is the diagnosis code set?
YES : Diagnose the combination meter (Refer to GROUP 54A – Troubleshooting P.54A-55).
NO : Go to Step 4.

Step 4. M.U.T.-III diagnosis code
When the ignition switch is turned to the LOCK (OFF) position, check that the ETACS-ECU does not set the diagnosis code.

Q: Is the diagnosis code set?
YES : Refer to diagnosis code chart P.54B-26.
NO : Go to Step 5.

Step 5. M.U.T.-III actuator test
Perform the actuator test for the combination meter, and check that the front fog lamp indicator illuminates (Refer to GROUP 54A – Combination Meter P.54A-95).

Q: Is the check result normal?
YES : Replace the ETACS-ECU.
NO : Replace the combination meter.

Main Index
Group TOC

INTERIOR LAMP

Inspection procedure O-1: The interior lamps (room ramp, rear parsonal lamps, door lamps, luggage compartment lamp, key illumination lamp) does not illuminate or extinguish normally.

⚠ CAUTION
Whenever the ECU is replaced, ensure that the input and output signal circuits are normal.

Interior Lamp Circuit <with keyless entry system>

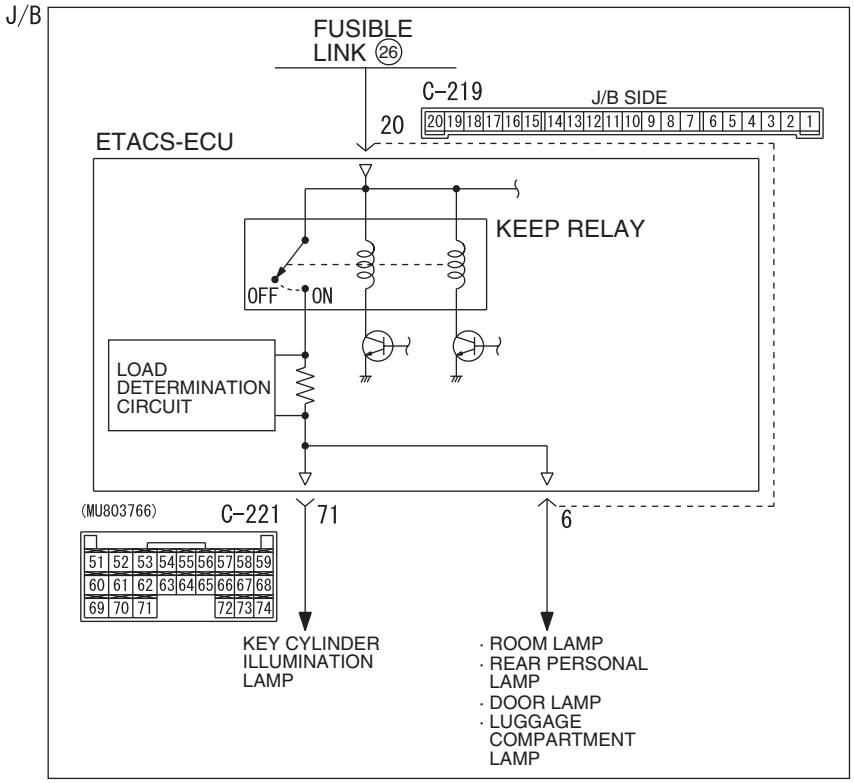

W4X54E210A

Main Index
Group TOC

Interior Lamp Circuit <without keyless entry system>

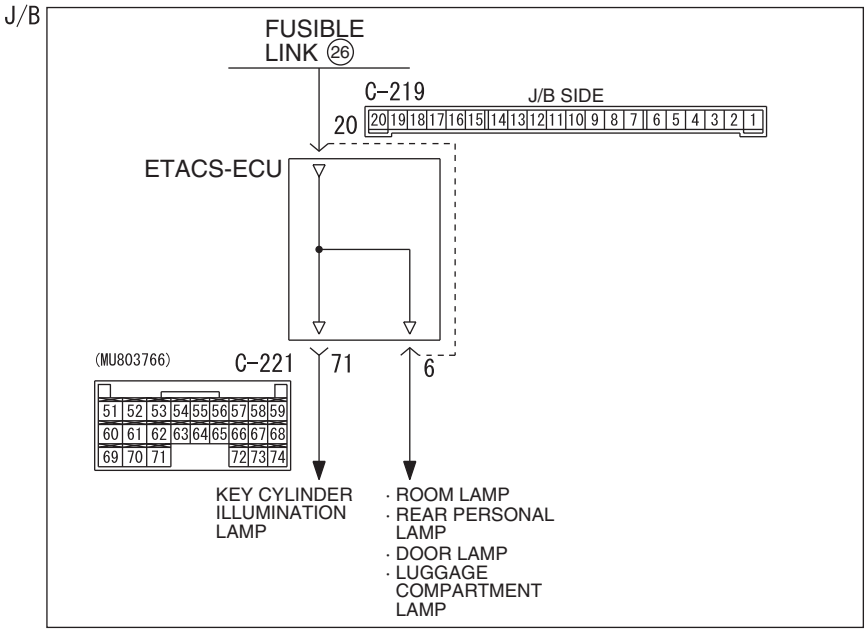

W4X54E211A

COMMENTS ON TROUBLE SYMPTOM

The ETACS-ECU operates the interior lamps (room lamp, rear personal lamp. luggage compartment lamp, door lamp, key cylinder illumination lamp) in accordance with the input signals below.

- Ignition switch (IG1)
- Door switches
- Tailgate switch
- Door key switch
- Tailgate key switch
- Driver's door lock actuator
- Interior lamp switch
- Multi-purpose fuse No.18
- Key reminder switch <vehicles with keyless entry system>
- Interior lamp loaded signal <vehicles with keyless entry system>

If this function does not work normally, these input signal circuit(s) or the ETACS-ECU may be defective.

POSSIBLE CAUSES

- Malfunction of the door switches
- Malfunction of the room lamp switches
- Malfunction of the driver's door lock actuator
- Malfunction of the ETACS-ECU
- Malfunction of the key reminder switch
- Damaged harness wires and connectors

DIAGNOSTIC PROCEDURE

Step 1. Check the power supply circuit.

When the ignition switch is turned to the LOCK (OFF) position, check if the hazard warning lamps illuminate.

Q: Is the check result normal?

YES : Go to Step 2.

NO : Refer to inspection procedure A-2 "Check the ETACS-ECU battery power supply circuit P.54B-71."

Main Index
Group TOC

Step 2. Check the illumination of the interior lamps.

Check that the interior lamps illuminate and extinguish.

NOTE: Check that the interior lamps illuminate or extinguish when the interior lamp switches are operated. For the room lamp and the rear personal lamps, check they illuminate when the lamp switches are turned to the ON or DOOR position.

Q: Which of the interior lamp does no illuminate or extinguish?

All of the interior lamps illuminate and extinguish normally. : The procedure is complete.

No lamps illuminate at all. : Replace the ETACS-ECU.

When the interior lamp switches are turned to the ON position, no lamps illuminate at all. Alternatively, when the interior lamp switches are turned to the OFF position, all the interior lamps illuminate. : Refer to inspection procedure P-20 "The interior lamp "all on" or "all off" switch signal is not sent to the ETACS-ECU P.54B-397."

If the interior lamp switches are turned to the ON position, none of the room lamp and the rear personal lamps illuminate at all. : Go to Step 3.

The room lamp and the rear personal lamps do not illuminate or extinguish normally when the switches are at the DOOR position. : Go to Step 5.

Only the room lamp does not illuminate or extinguish normally. : Refer to inspection procedure O-2 "The room lamp does not illuminate normally P.54B-288."

Only right or left rear personal lamp does not illuminate or extinguish normally. : Refer to inspection procedure O-3 "The rear personal lamp does not illuminate normally P.54B-294."

Only the luggage compartment lamp does not illuminate or extinguish normally. : Refer to inspection procedure O-4 "The luggage compartment lamp does not illuminate normally P.54B-303."

Only the door lamps do not illuminate or extinguish normally. : Refer to Inspection procedure O-5 "Door lamps do not illuminate/go out normally P.54B-308."

Only the key cylinder illumination lamp does not illuminate or extinguish normally. : Refer to inspection procedure J-1 "The ignition key cylinder illumination lamp does not illuminate/extinguish normally P.54B-226."

Step 3. Connector check: C-219 ETACS-ECU connector and E-02 room lamp connector

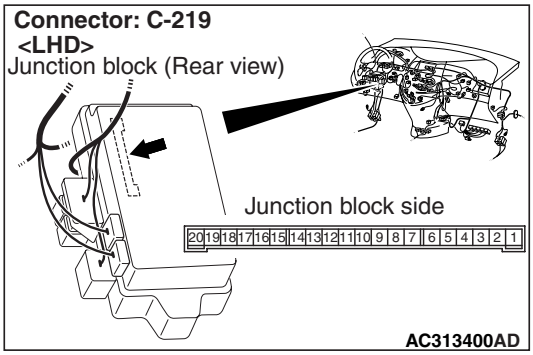

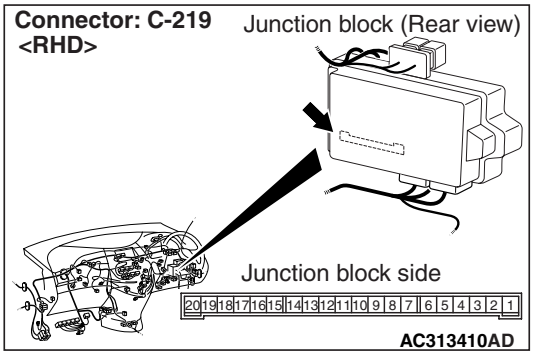

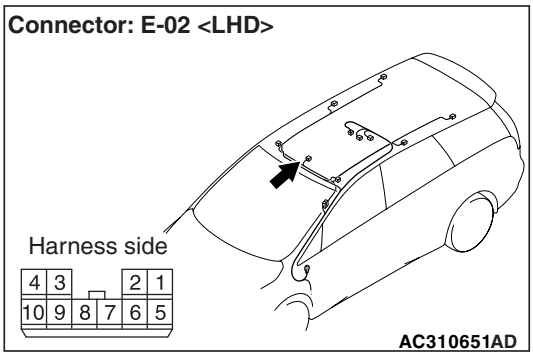

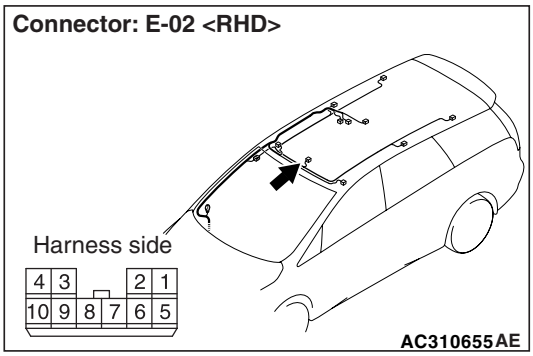

Q: Is the check result normal?

YES : Go to Step 4.

NO : Repair the defective connector.

Step 4. Check the wiring harness from C-219 ETACS-ECU connector terminal No.6 to E-02 room lamp connector terminal No.10.

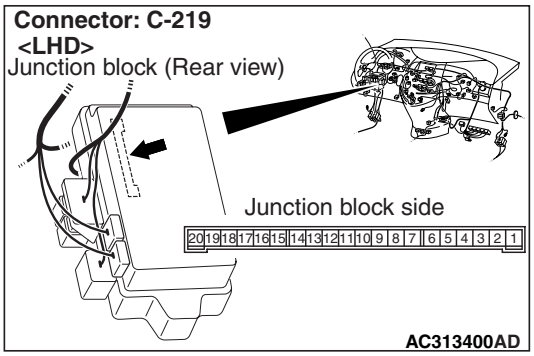

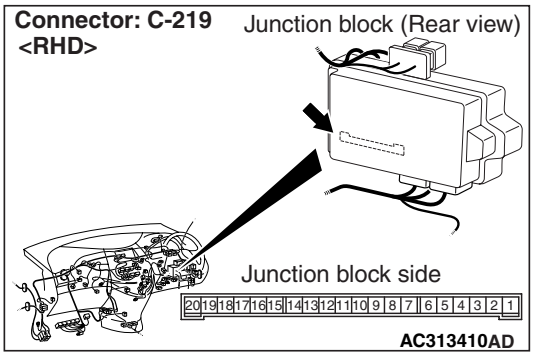

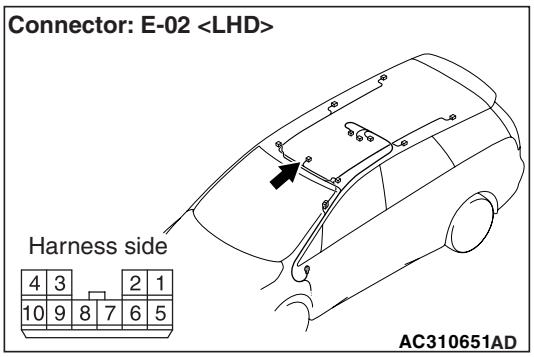

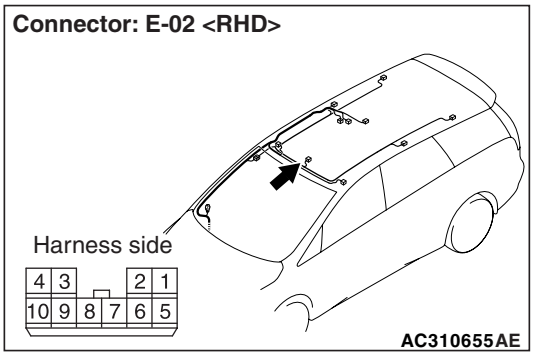

NOTE:

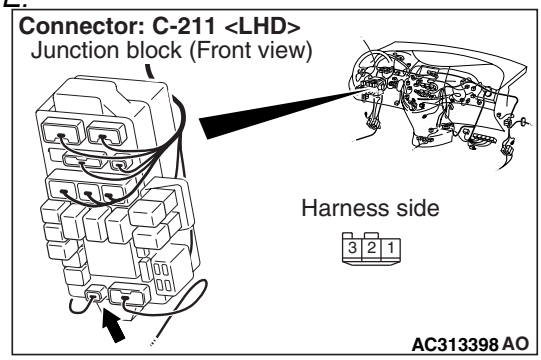

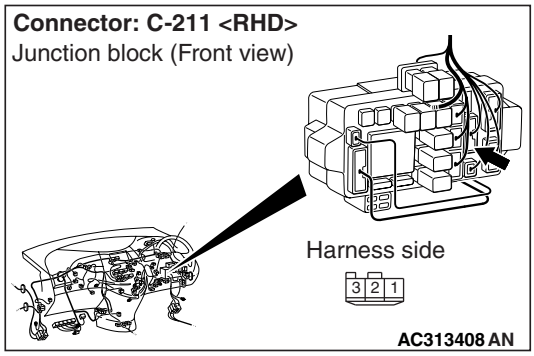

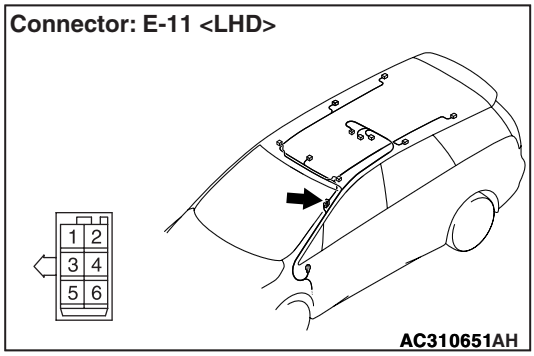

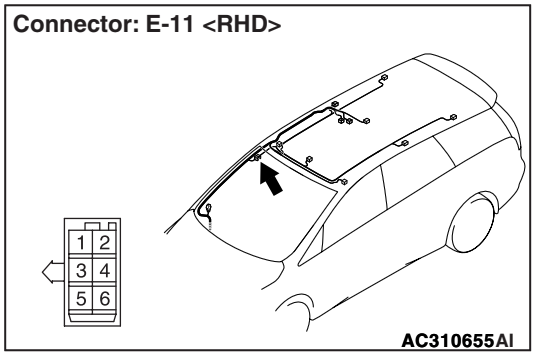

Prior to the wiring harness inspection, check intermediate connector E-11 and junction block connector C-211, and repair if necessary.

- Check the power supply line for open circuit.

Q: Is the check result normal?

YES : Replace the ETACS-ECU.

NO : Repair the wiring harness.

Main Index
Group TOC

Step 5. Connector check: C-219 ETACS-ECU connector and E-02 room lamp connector

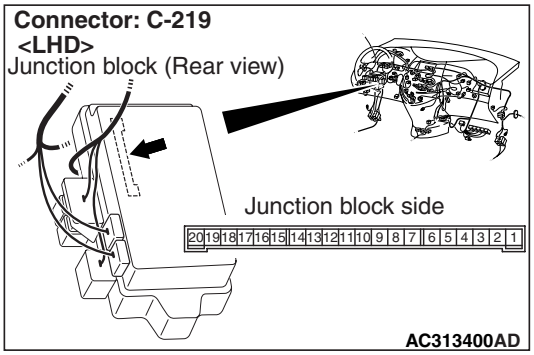

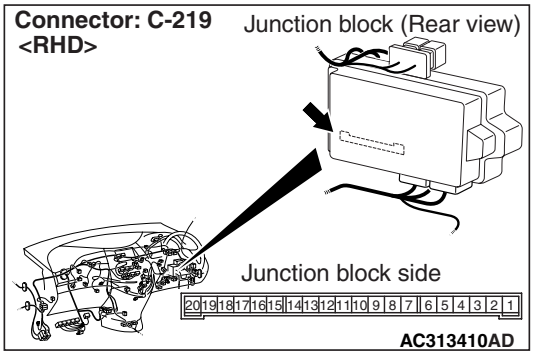

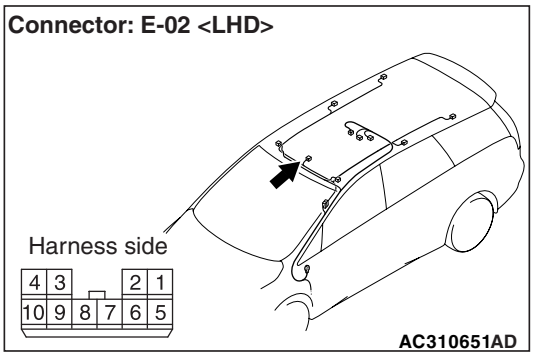

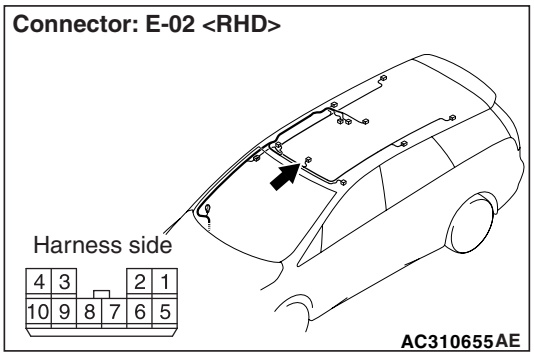

Q: Is the check result normal?

YES : Go to Step 6.

NO : Repair the defective connector.

Step 6. Check the wiring harness from C-219 ETACS-ECU connector terminal No.5 to E-02 room lamp connector terminal No.8.

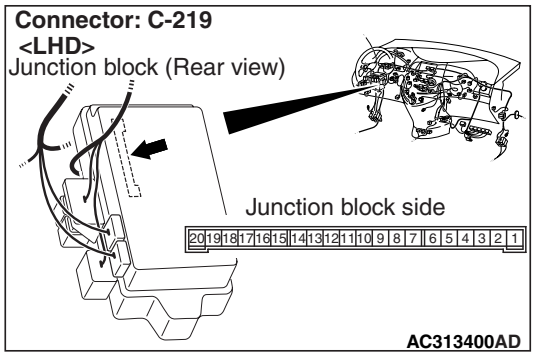

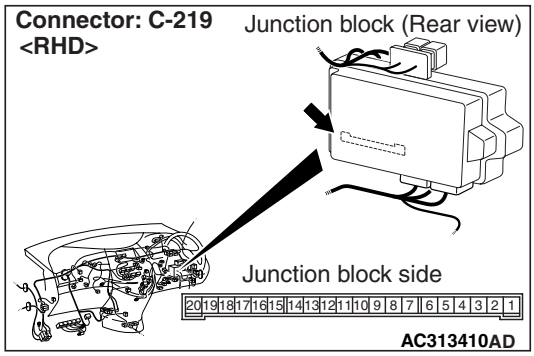

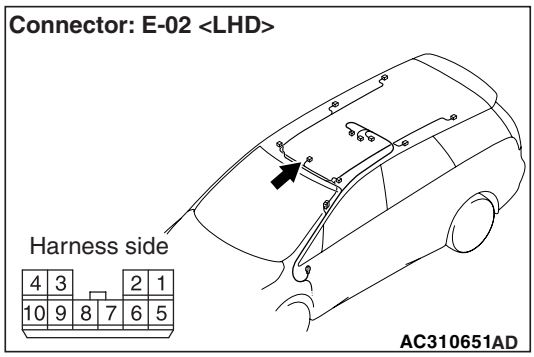

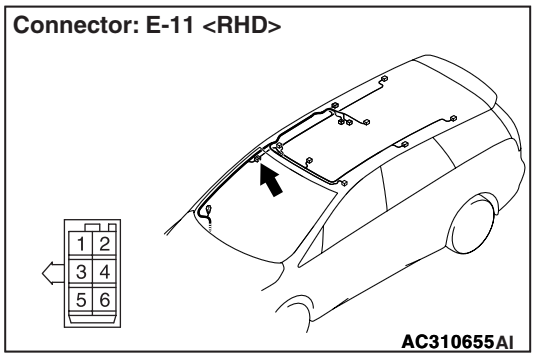

Main Index
Group TOC

NOTE:

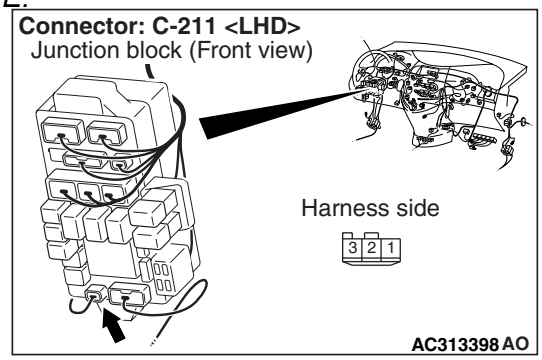

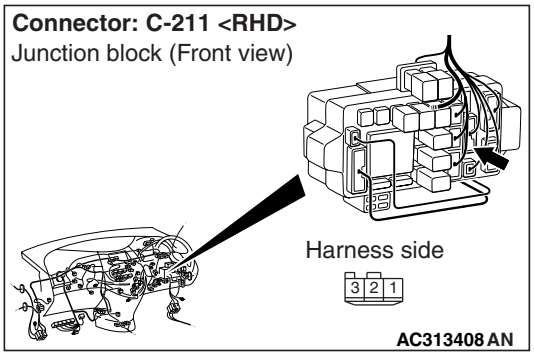

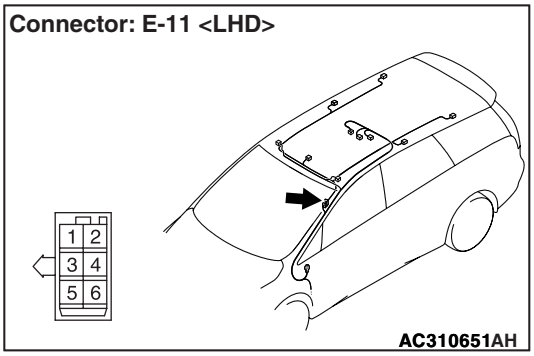

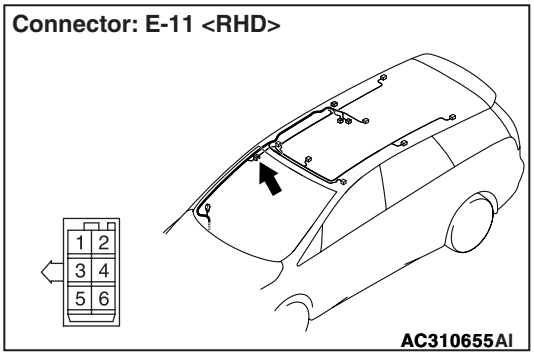

Prior to the wiring harness inspection, check intermediate connector E-11 and junction block connector C-211, and repair if necessary.

- Check the power supply line for open circuit.

Q: Is the check result normal?

YES : . Replace the ETACS-ECU.

NO : . Repair the wiring harness.

Main Index
Group TOC

Inspection Procedure O-2: The room lamp does not illuminate normally.

⚠ CAUTION

Whenever the ECU is replaced, ensure that the input and output signal circuits are normal.

Room Lamp and Rear Personal Lamp Circuit

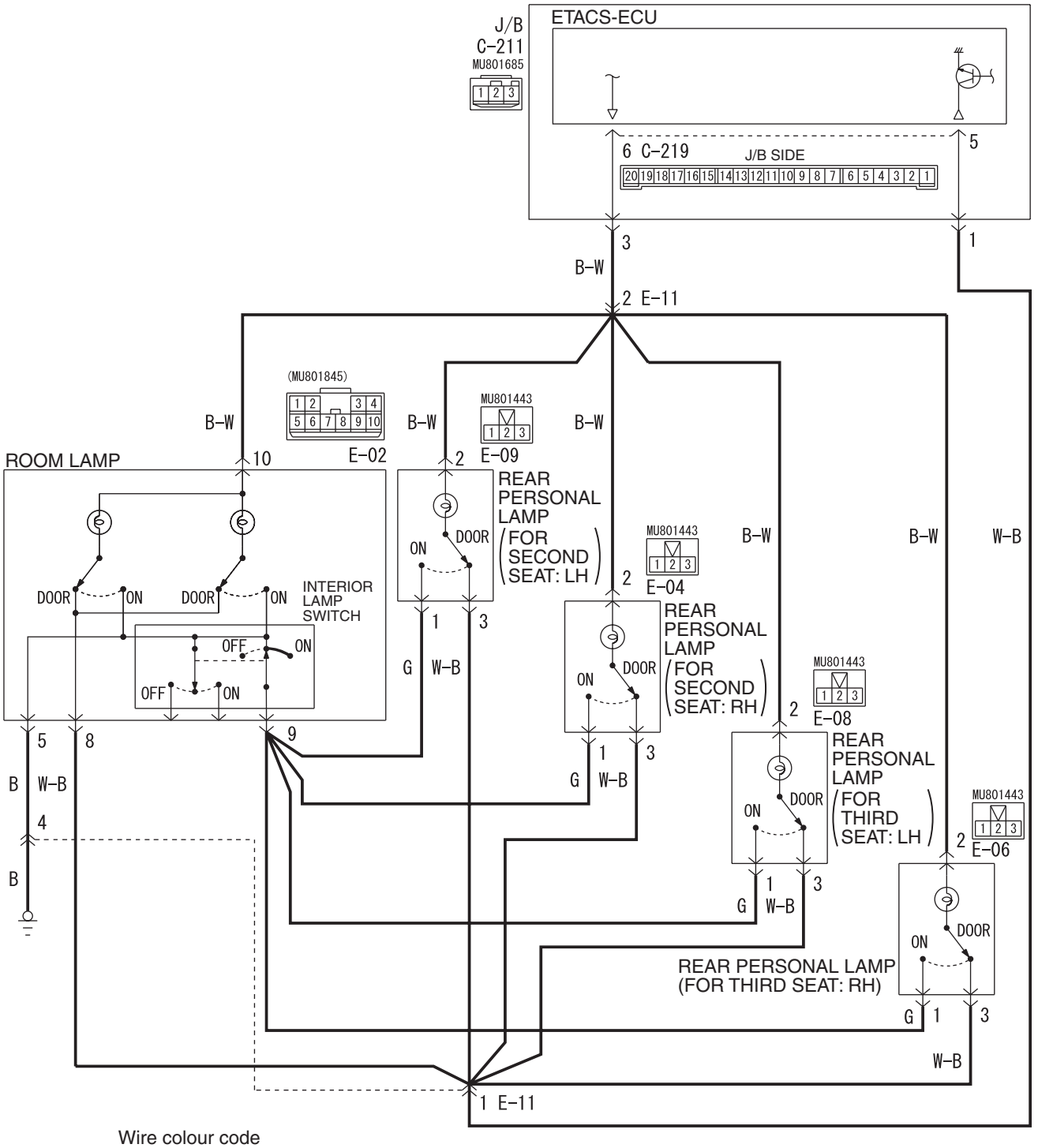

Wire colour code
B : Black LG : Light green G : Green L : Blue W : White Y : Yellow SB : Sky blue
BR : Brown O : Orange GR : Gray R : Red P : Pink V : Violet

W4X54E036A

Main Index
Group TOC

COMMENTS ON TROUBLE SYMPTOM

If the room lamp does not illuminate or extinguish normally, wiring harness connector(s) or the bulb may be defective.

POSSIBLE CAUSES

- Malfunction of the interior lamp switches
- Malfunction of the room lamp bulbs
- Malfunction of the rear personal lamp bulbs
- Damaged harness wires and connectors

DIAGNOSTIC PROCEDURE

Step 1. Pulse check

Check the input signals below, which are related to the room lamp.

System switch	Check condition
Driver's door switch	Driver's door is opened while all the other doors are closed.
Passenger’s door switch	Passenger's door is opened while all the other doors are closed.
Rear door (RH) switch	Rear door (RH) is opened while all the other doors are closed
Rear door (LH) switch	Rear door (LH) door is opened while all the other doors are closed
Tailgate switch	Tailgate is opened while all the other doors are closed
Driver's door lock actuator switch	When the driver's door is unlocked or locked
Interior lamp ON switch	When turned from OFF to ON
Interior lamp OFF switch	When turned from ON to OFF

OK: The M.U.T.-III sounds or the voltmeter needle fluctuates.

Q: Are the check result normal?

All the door switch signals are not received. : Refer to inspection procedure P-12 "All the door switch signals are not received P.54B-358."

The driver's door lock actuator switch signal is not received. : Refer to inspection procedure P-13 "The driver's door lock actuator switch signal is not received <LH drive vehicles>P.54B-364 or <RH drive vehicles>P.54B-367 ."

The interior lamp switch signal is not received. : Refer to inspection procedure P-20 "The interior lamp "all on" or "all off" switch signal is not sent to the ETACS-ECU P.54B-397."

Step 2. Retest the system.

Check that the right or left room lamp illuminates when the interior lamp switch is operated.

Q: Is the check result normal?

YES : Go to Step 5.

NO : Go to Step 3.

Main Index
Group TOC

Step 3. Connector check: C-219 ETACS-ECU connector, E-02 room lamp connector

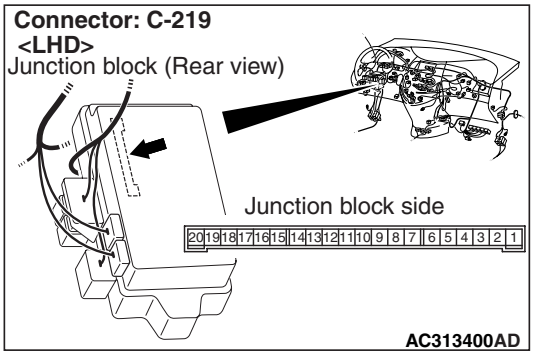

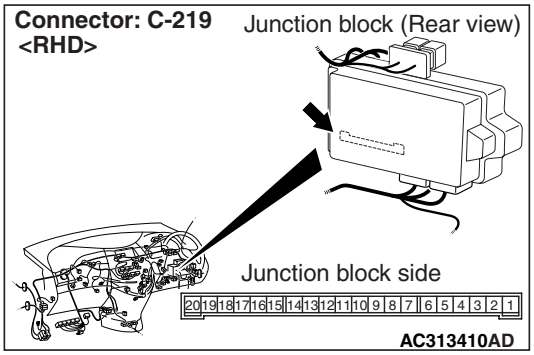

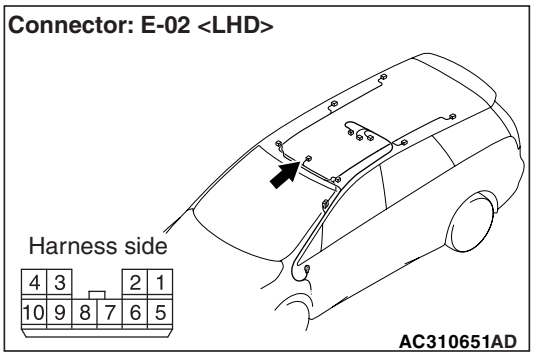

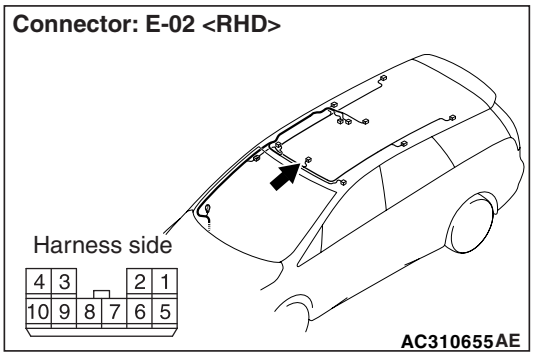

Q: Is the check result normal?

YES : Go to Step 4.

NO : Repair the defective connector.

Step 4. Check the wiring harness from C-219 ETACS-ECU connector terminal No.6 to E-02 room lamp connector terminal No.10.

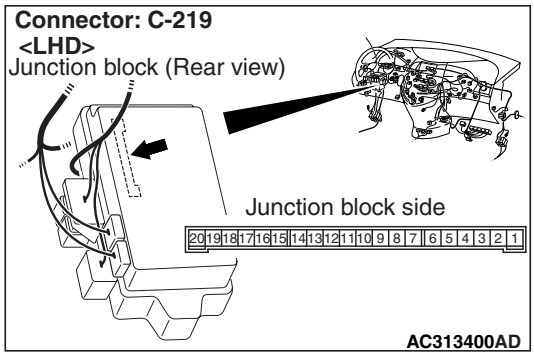

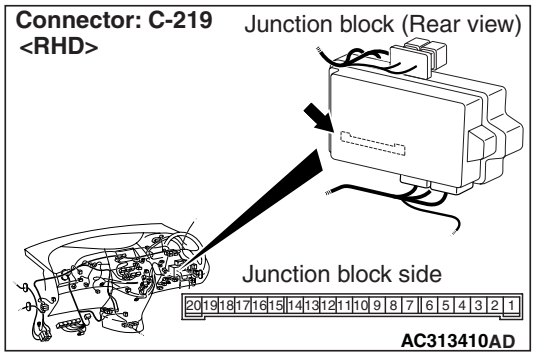

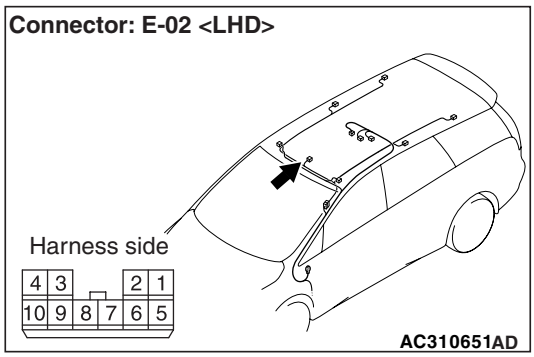

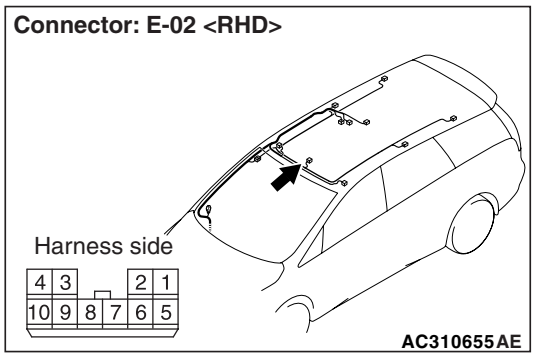

Main Index
Group TOC

NOTE:

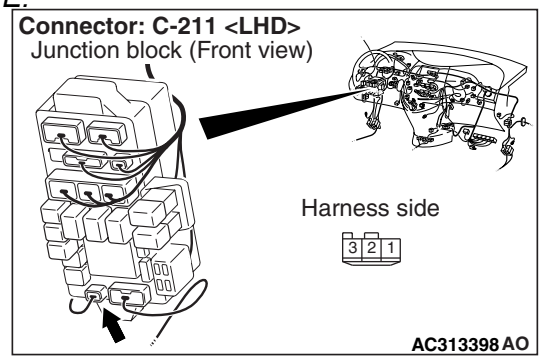

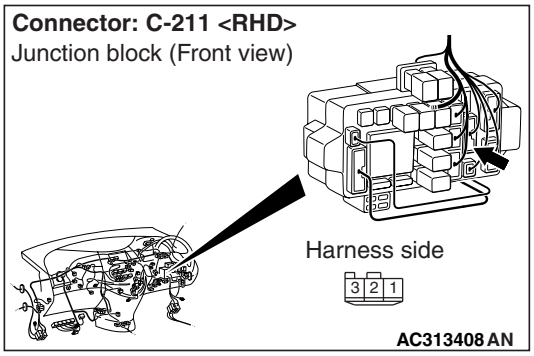

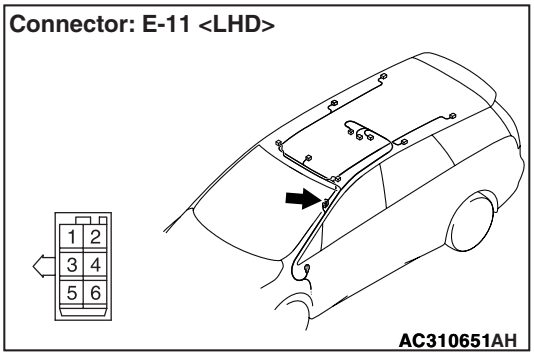

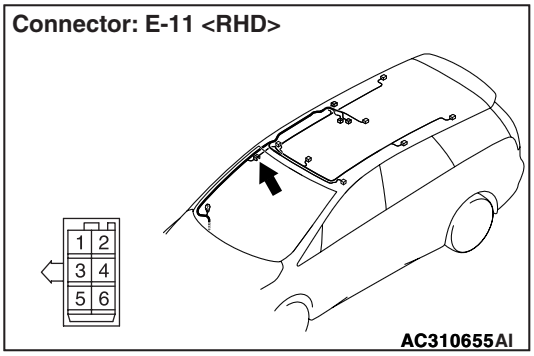

Prior to the wiring harness inspection, check intermediate connector E-11 and junction block connector C-211, and repair if necessary.

- Check the power supply line for open circuit.

Q: Is the check result normal?
YES : Replace the room lamp.
NO : Repair the wiring harness.

Step 5. Check the room lamp switch.

Check which position (ON or DOOR) of the room lamp switch does not activate the room lamp.

Q: Which switch position does not activate the lamp?
The lamp illuminates at neither the ON nor DOOR position. : Go to Step 6.
The lamp does not illuminate at the ON position. : Go to Step 6.
The lamp does not illuminate at the DOOR position. : Go to Step 8.

Step 6. Connector check: E-02 room lamp connector

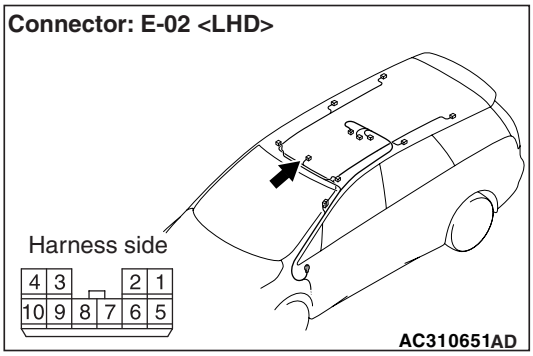

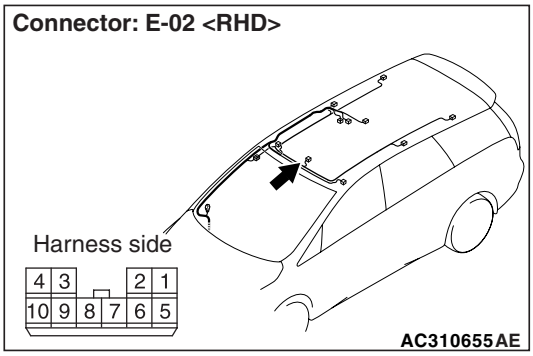

Q: Is the check result normal?
YES : Go to Step 7.
NO : Repair the defective connector.

Step 7. Check the bulbs of the room lamp.

Check that the room lamp bulbs are not burned out.

Q: Is the check result normal?
YES : Replace the room lamp.
NO : Replace the room lamp bulb.

Main Index
Group TOC

Step 8. Connector check: E-02 room lamp connector

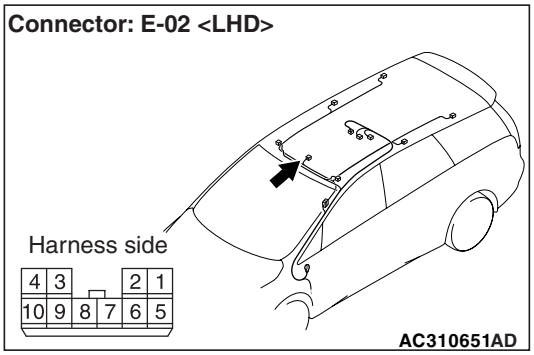

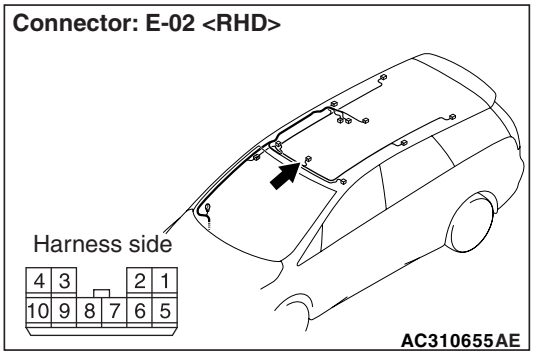

Q: Is the check result normal?
YES : Go to Step 9.
NO : Repair the defective connector.

Step 9. Check the bulbs of the room lamp.

Check that the room lamp bulbs are not burned out.

Q: Is the check result normal?
YES : Go to Step 10.
NO : Replace the room lamp bulb.

Step 10. Check the wiring harness from C-219 ETACS-ECU connector terminal No.5 to E-02 room lamp connector terminal No.8.

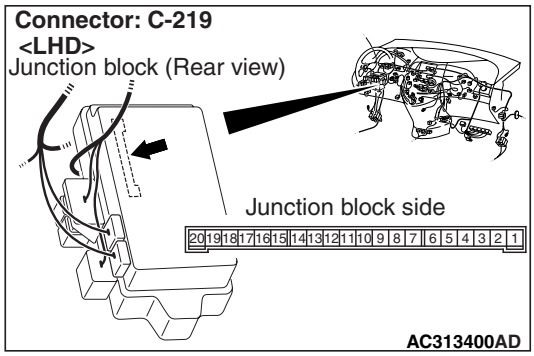

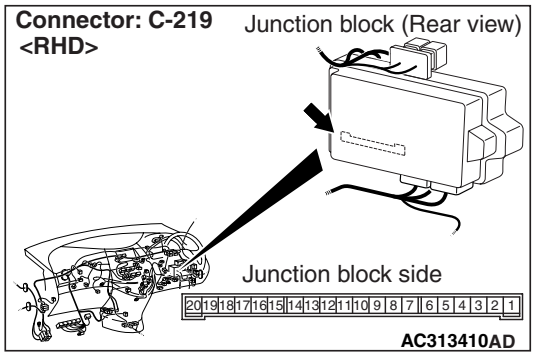

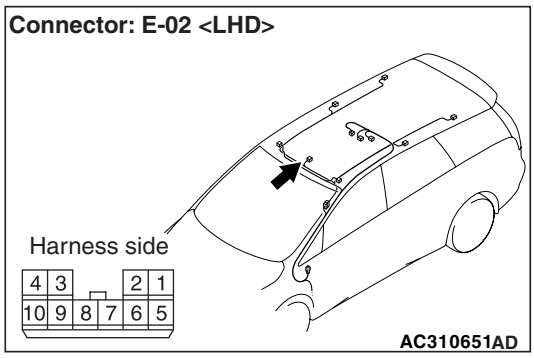

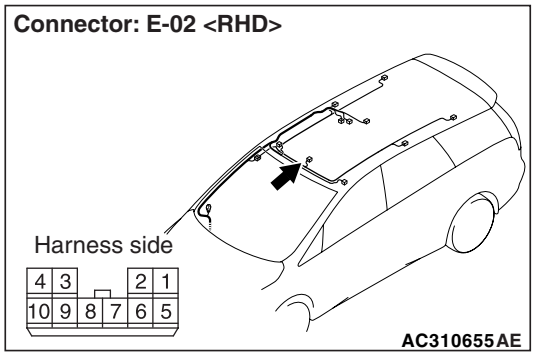

Main Index
Group TOC

NOTE:

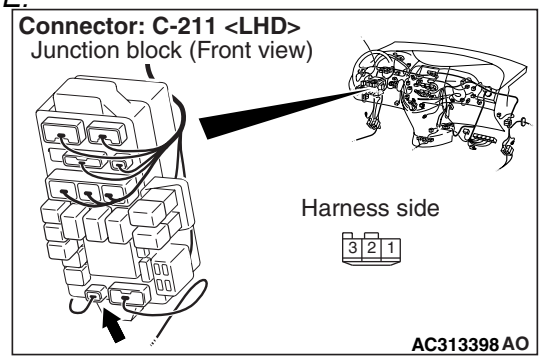

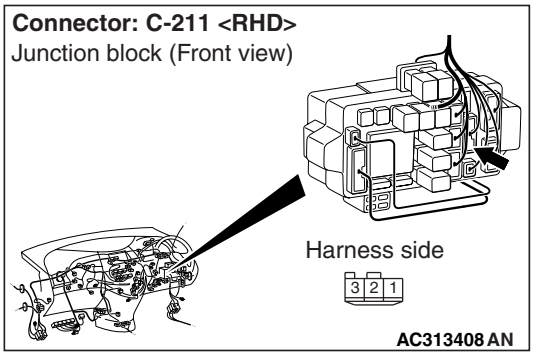

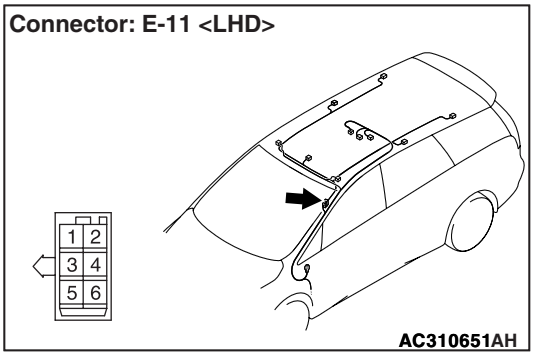

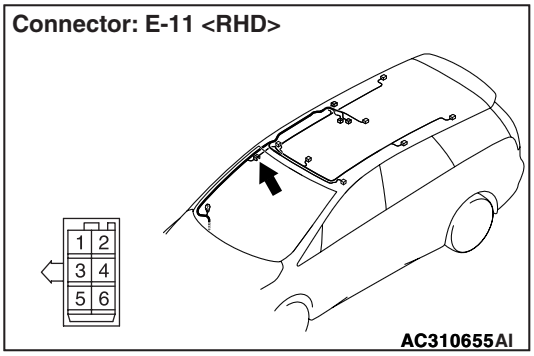

Prior to the wiring harness inspection, check intermediate connector E-11 and junction block connector C-211, and repair if necessary.

- Check the earth wires for open circuit.

Q: Is the check result normal?

YES : . Replace the room lamp.

NO : . Repair the wiring harness.

Main Index
Group TOC

Inspection Procedure O-3: The rear personal lamp does not illuminate normally.

⚠ CAUTION

Whenever the ECU is replaced, ensure that the input and output signal circuits are normal.

Room Lamp and Rear Personal Lamp Circuit

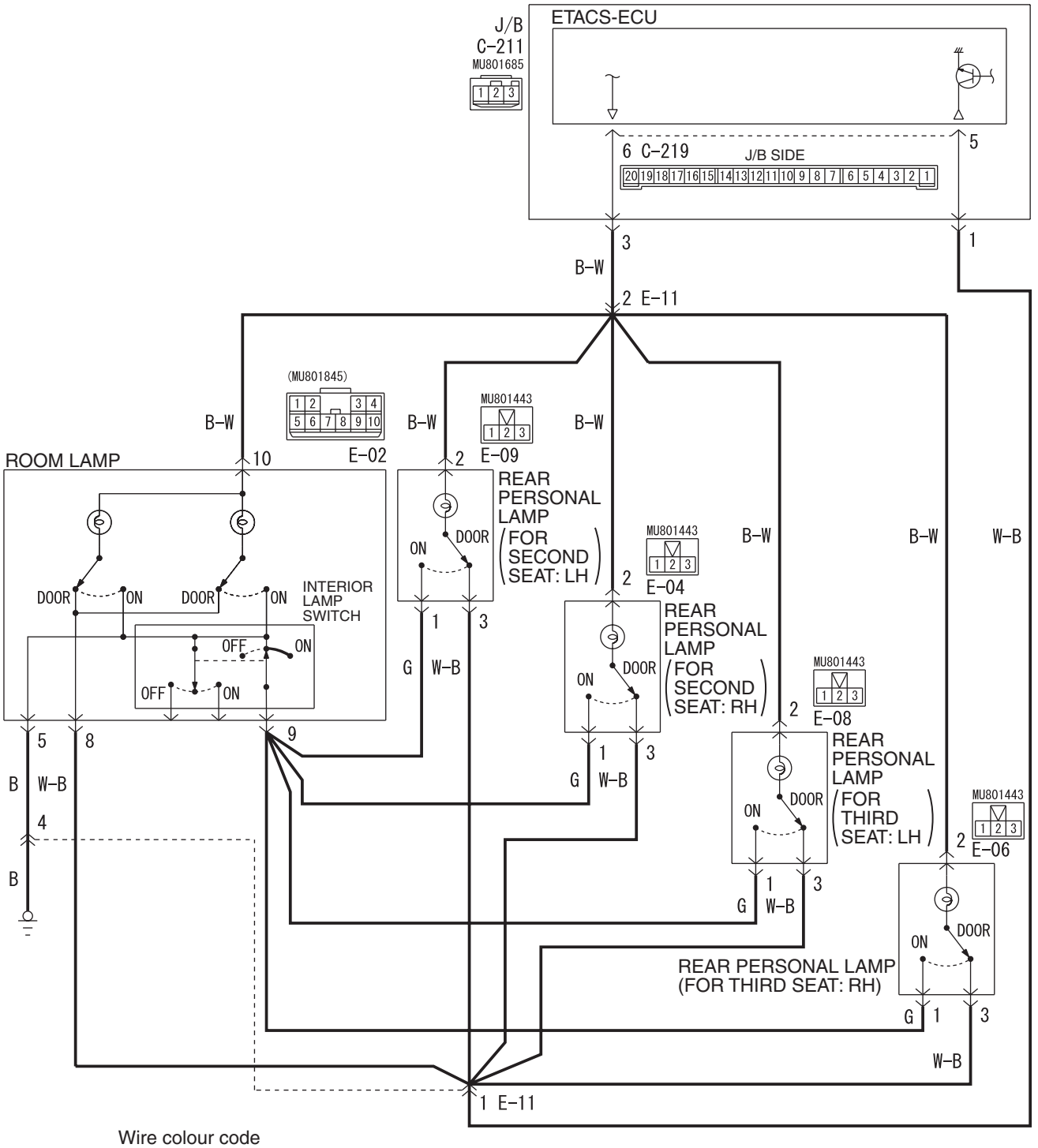

Wire colour code
B : Black LG : Light green G : Green L : Blue W : White Y : Yellow SB : Sky blue
BR : Brown O : Orange GR : Gray R : Red P : Pink V : Violet

W4X54E036A

Main Index
Group TOC

COMMENTS ON TROUBLE SYMPTOM

If the rear personal lamps do not illuminate or extinguish normally, wiring harness connector(s) or the bulb may be defective.

POSSIBLE CAUSES

- Malfunction of the interior lamp switches
- Malfunction of the room lamp bulbs
- Malfunction of the rear personal lamp bulbs
- Damaged harness wires and connectors

DIAGNOSTIC PROCEDURE

Step 1. Pulse check

Check the input signals below, which are related to the rear personal lamps.

System switch	Check condition
Driver's door switch	Driver's door is opened while all the other doors are closed.
Passenger’s door switch	Passenger's door is opened while all the other doors are closed.
Rear door (RH) switch	Rear door (RH) is opened while all the other doors are closed
Rear door (LH) switch	Rear door (LH) door is opened while all the other doors are closed
Tailgate switch	TAilgate is opened while all the other doors are closed
Driver's door lock actuator switch	When the driver's door is unlocked or locked
Interior lamp ON switch	When turned from OFF to ON
Interior lamp OFF switch	When turned from ON to OFF

OK: The M.U.T.-III sounds or the voltmeter needle fluctuates.

Q: Is the check result normal?

All the signals are received normally. : Go to Step 2.

All the door switch signals are not received. : Refer to inspection procedure P-12 "All the door switch signals are not received P.54B-358."

The driver's door lock actuator switch signal is not received. : Refer to inspection procedure P-13 "The driver's door lock actuator switch signal is not received <LH drive vehicles>P.54B-364 or <RH drive vehicles>P.54B-367."

The interior lamp switch signal is not received. : Refer to inspection procedure P-20 "The interior lamp "all on" or "all off" switch signal is not sent to the ETACS-ECU P.54B-397."

Step 2. Retest the system.

Check which lamp does not illuminate when the lamp switches are operated.

Q: Which lamp does not illuminate?

No lamps illuminate : Go to Step 3.

One of the second seat lamps (RH or LH) or the third seat lamps (RH or LH) does not illuminate. : Go to Step 7.

Step 3. Check the rear personal lamp switches.

Check which position (ON or DOOR) of the rear personal lamp switch does not activate the relevant lamp.

Q: Which switch position does not activate the lamp?

The lamp illuminates at neither the ON nor DOOR position. : Go to Step 4.

The lamp does not illuminate at the DOOR position. : Go to Step 6.

The lamp does not illuminate at the ON position. : Replace the rear personal lamp.

Main Index
Group TOC

Step 4. Connector check: C-219 ETACS-ECU connector, E-09 rear personal lamp connector

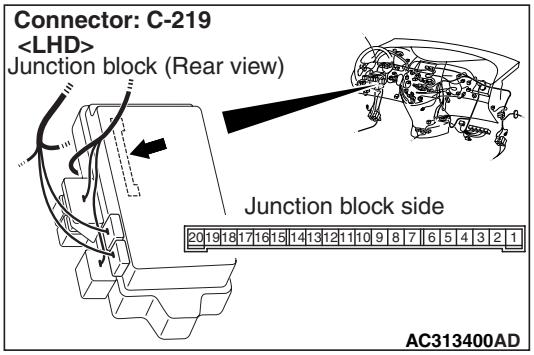

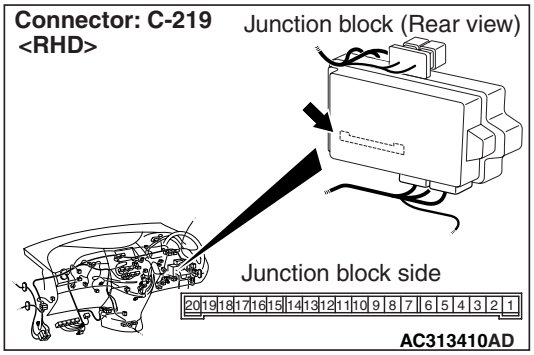

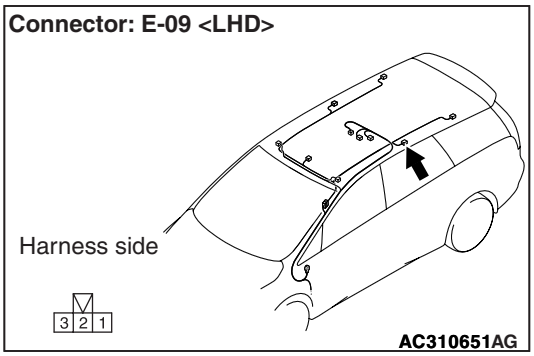

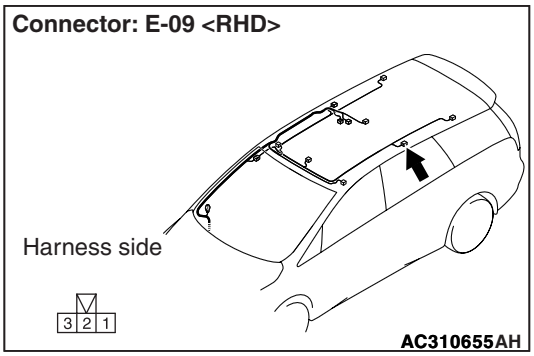

Q: Is the check result normal?

YES : Go to Step 5.

NO : Repair the defective connector.

Step 5. Check the wiring harness from C-219 ETACS-ECU connector terminal No.6 to E-09 rear personal lamp connector terminal No.2.

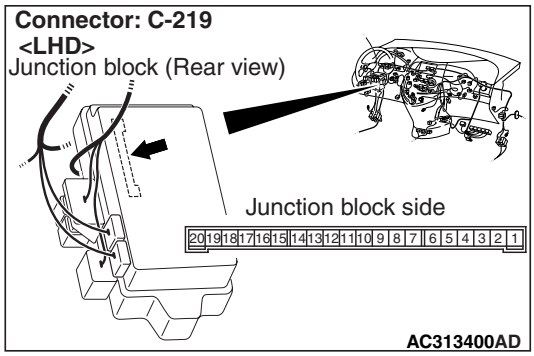

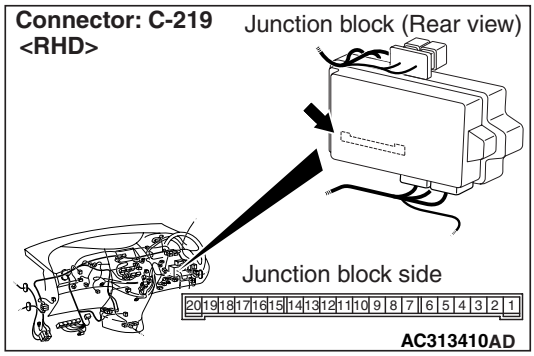

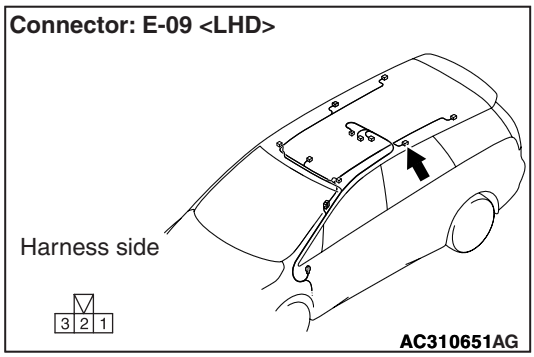

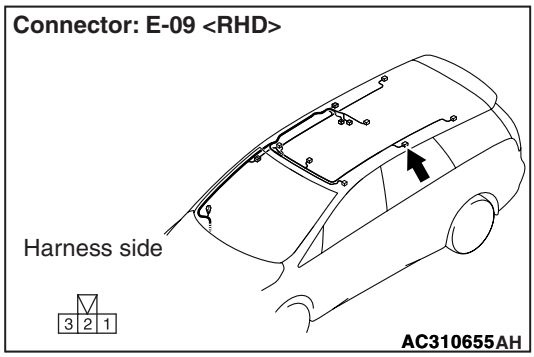

Main Index
Group TOC

NOTE:

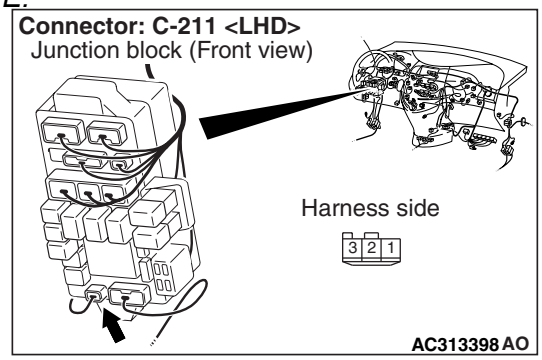

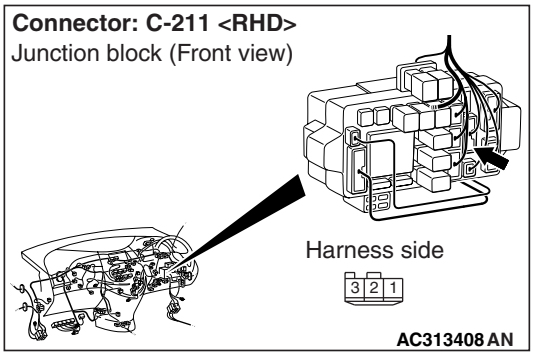

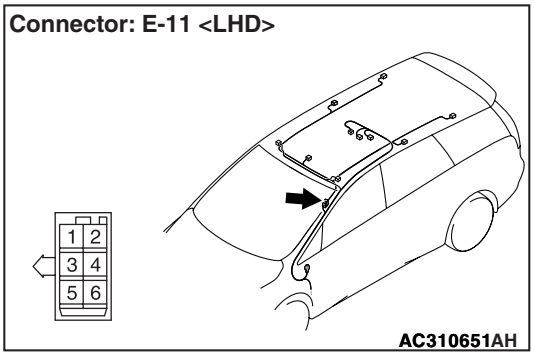

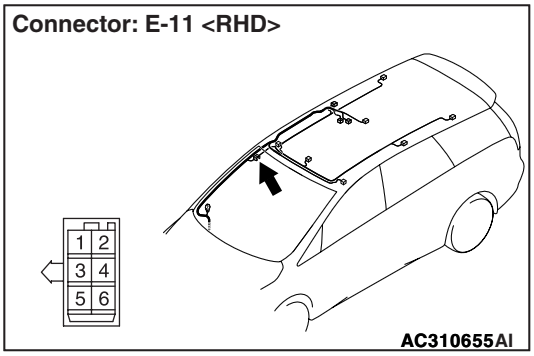

Prior to the wiring harness inspection, check intermediate connector E-11 and junction block connector C-211, and repair if necessary.

- Check the earth wires for open circuit.

Q: Is the check result normal?

YES : Replace the rear personal lamp.

NO : Repair the wiring harness.

Step 6. Check the wiring harness from C-219 ETACS-ECU connector terminal No.5 to E-09 rear personal lamp connector terminal No.3.

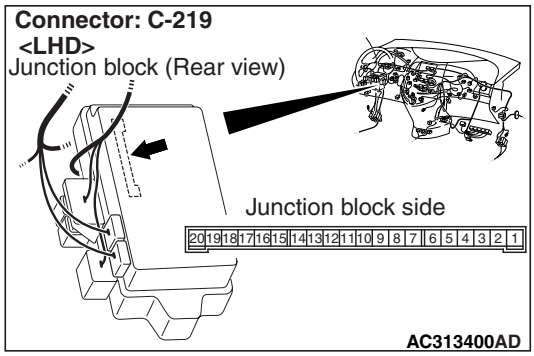

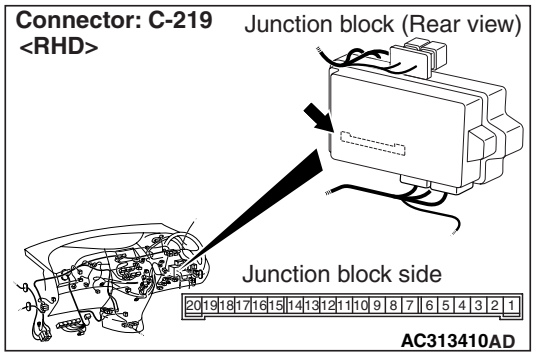

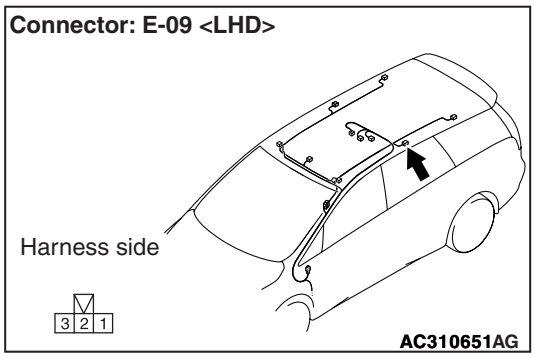

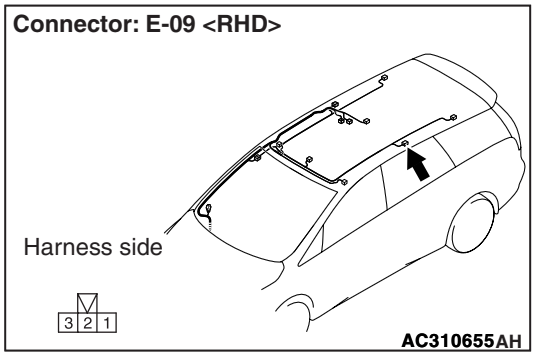

Main Index
Group TOC

NOTE:

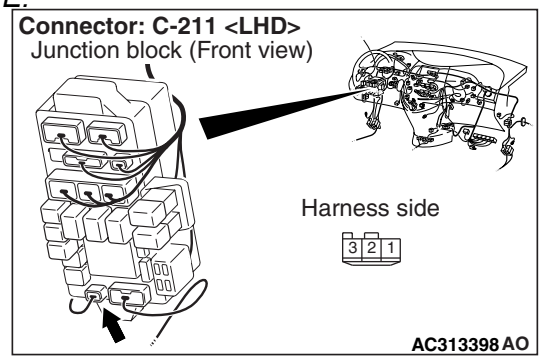

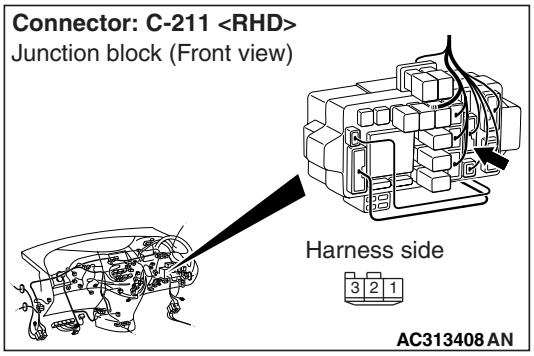

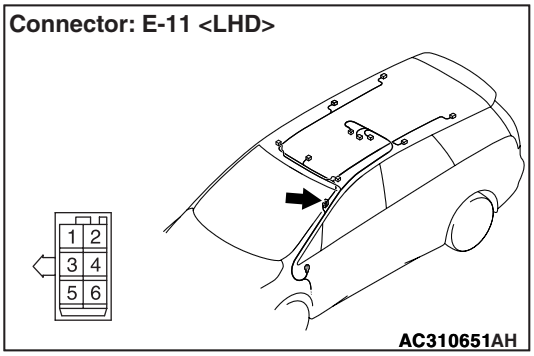

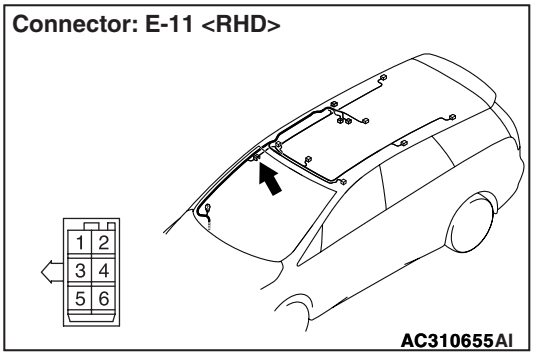

Prior to the wiring harness inspection, check intermediate connector E-11 and junction block connector C-211, and repair if necessary.

- Check the earth wires for open circuit.

Q: Is the check result normal?

YES : Replace the rear personal lamp.

NO : Repair the wiring harness.

Step 7. Connector check: E-09 rear personal lamp connector (for second seat: LH), E-04 rear personal lamp connector (for second seat: RH), E-08 rear personal lamp connector (for third seat: LH), E-06 rear personal lamp connector (for third seat: RH)

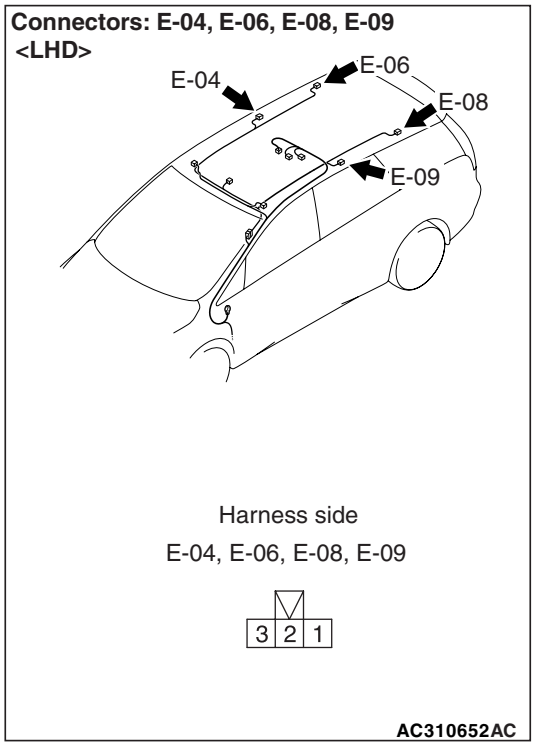

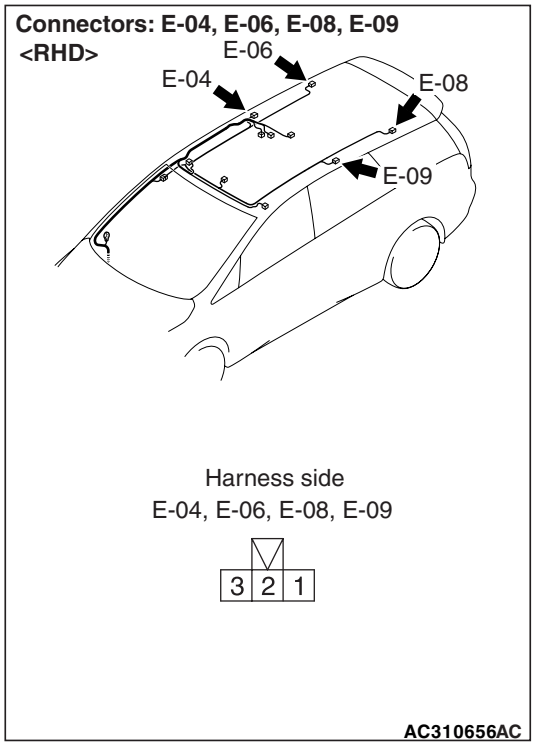

Q: Is the check result normal?

YES : Go to Step 8.

NO : Repair the defective connector.

Step 8. Check the bulbs of the rear personal lamp.

Check that the rear personal lamp bulbs are not burned out.

Q: Is the check result normal?

YES : Go to Step 9

NO : Replace the rear personal lamp bulb.

Step 9. Check the rear personal lamp switches.

Check which switch position (ON or DOOR) does not activate the rear personal lamp.

Q: Which switch position does not activate the lamp?

The lamp illuminates at neither the ON nor DOOR position. : Go to Step 10.

The lamp does not illuminate at the DOOR position. : Go to Step 11.

The lamp does not illuminate at the ON position. : Go to Step 13.

Step 10. Check the wiring harness from C-219 ETACS-ECU connector terminal No.6 to E-09 rear personal lamp (for second seat: RH) connector terminal No.2, E-04 rear personal lamp (for second seat: LH) connector terminal No.2, E-08 rear personal lamp (for third seat: LH) connector terminal No.2, E-06 rear personal lamp (for third seat: RH) connector terminal No.2.

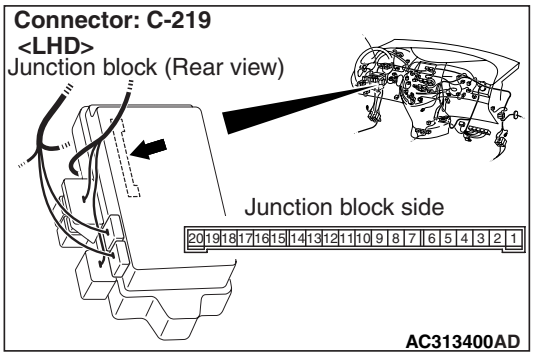

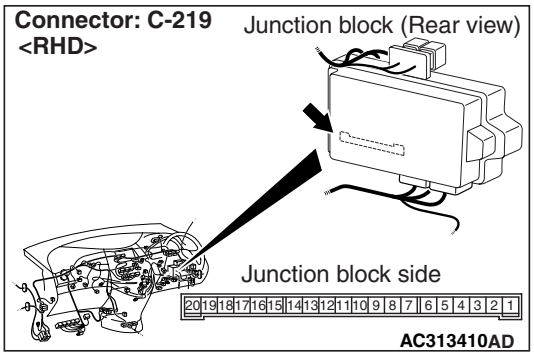

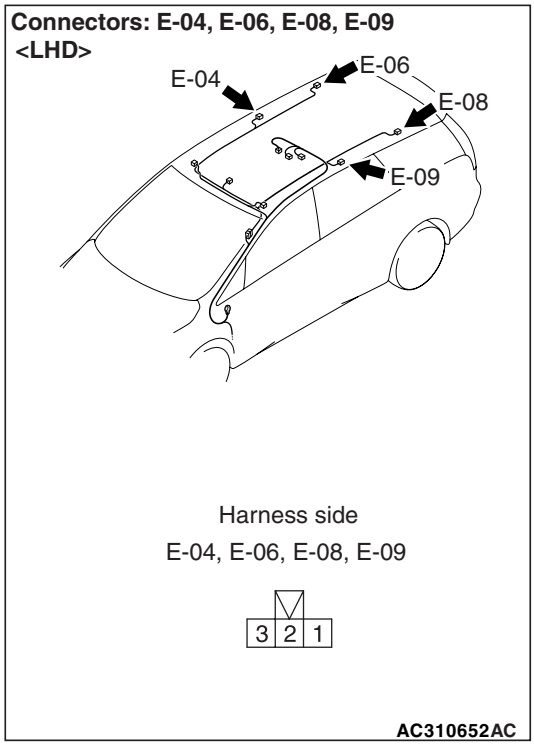

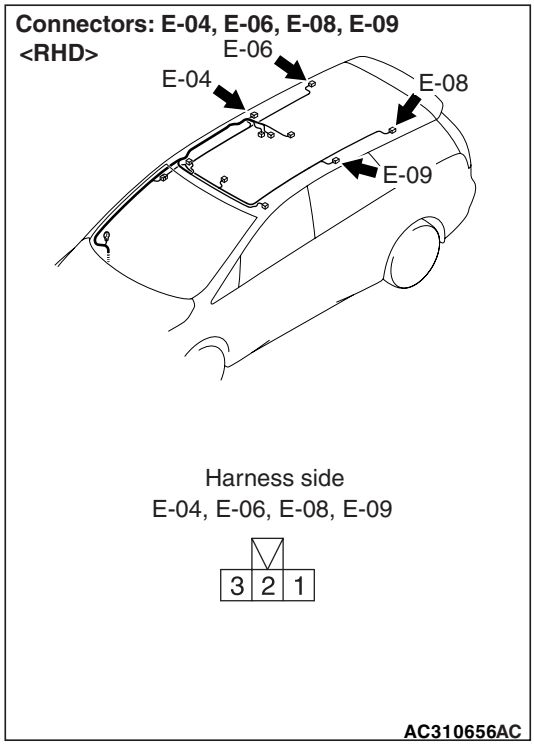

Main Index
Group TOC

NOTE:

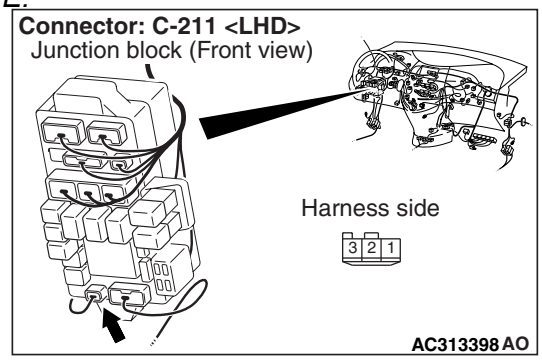

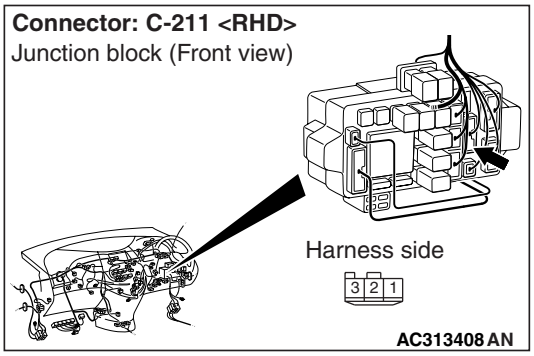

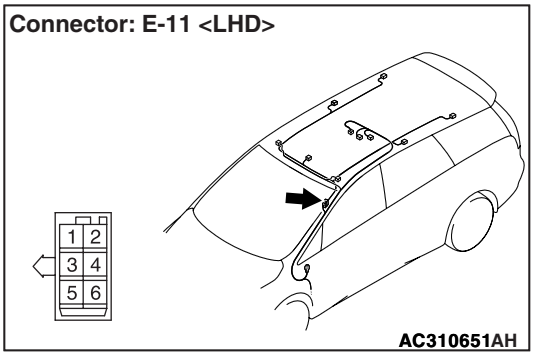

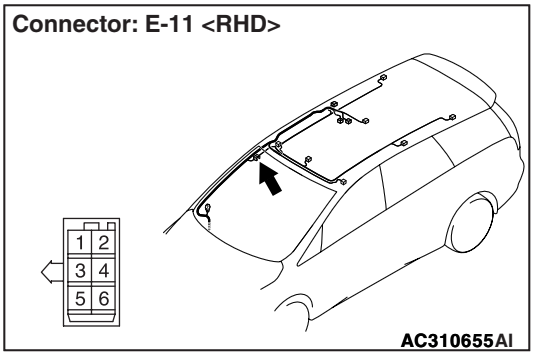

Prior to the wiring harness inspection, check intermediate connector E-11 and junction block connector C-211, and repair if necessary.

- Check the power supply line for open circuit.

Q: Is the check result normal?

YES : Replace the rear personal lamp.

NO : Repair the wiring harness.

Step 11. Connector check: E-02 room lamp connector

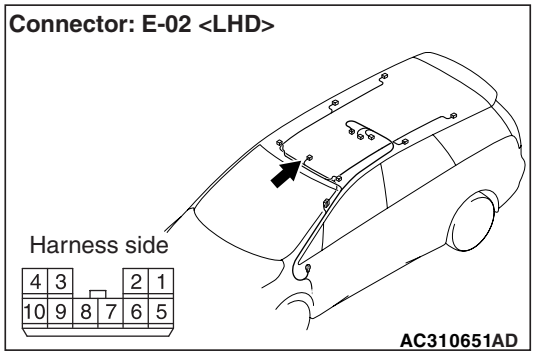

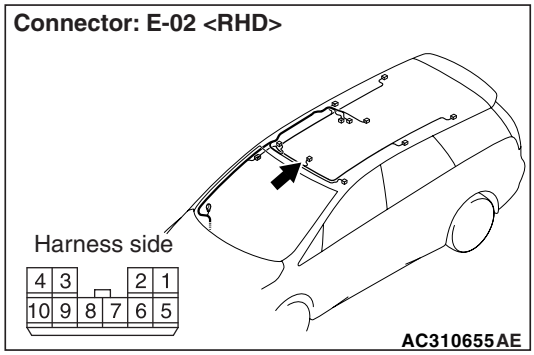

Q: Is the check result normal?

YES : Go to Step 12.

NO : Repair the defective connector.

Main Index
Group TOC

Step 12. Check the wiring harness from E-02 room lamp connector terminal No.9 to E-09 rear personal lamp (for second seat: RH) connector terminal No.1, E-04 rear personal lamp (for second seat: LH) connector terminal No.1, E-08 rear personal lamp (for third seat: LH) connector terminal No.1, E-06 rear personal lamp (for third seat: RH) connector terminal No.1.

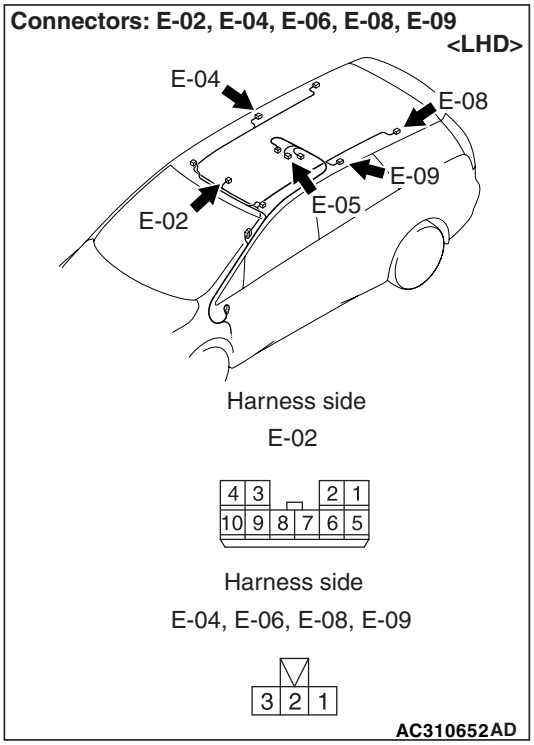

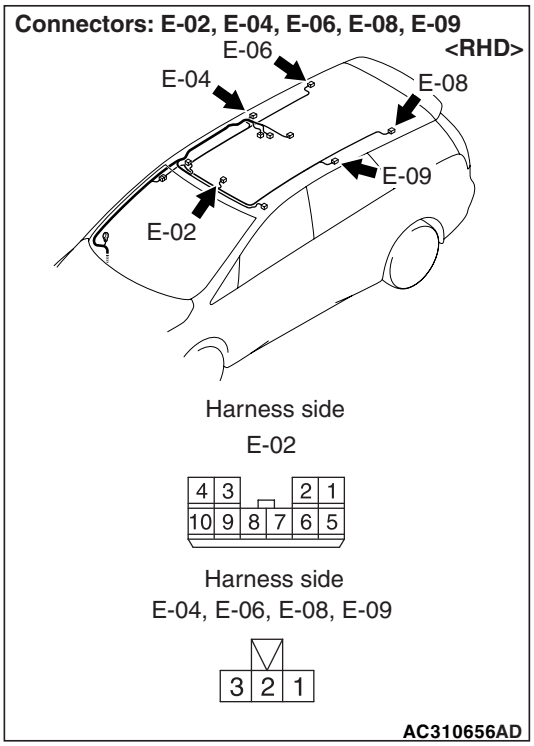

- Check the earth wires for open circuit.

Q: Is the check result normal?
YES : Replace the rear personal lamp.
NO : Repair the wiring harness.

Step 13. Check the wiring harness from C-219 ETACS-ECU connector terminal No.5 to E-09 rear personal lamp (for second seat: RH) connector terminal No.3, E-04 rear personal lamp (for second seat: LH) connector terminal No.3, E-08 rear personal lamp (for third seat: LH) connector terminal No.3, E-06 rear personal lamp (for third seat: RH) connector terminal No.3.

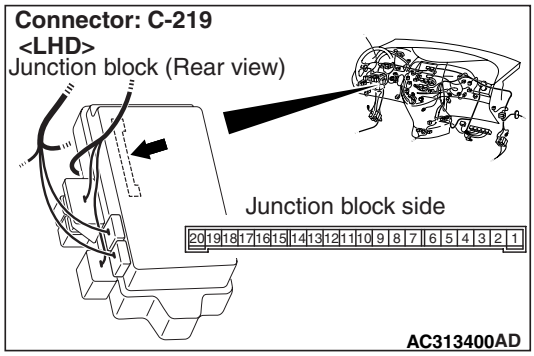

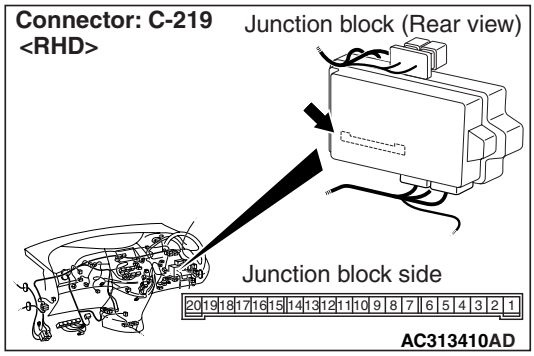

Main Index
Group TOC

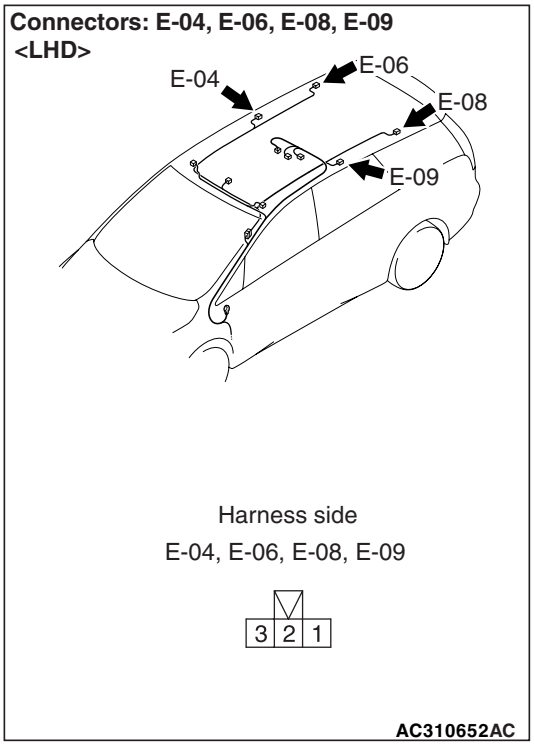

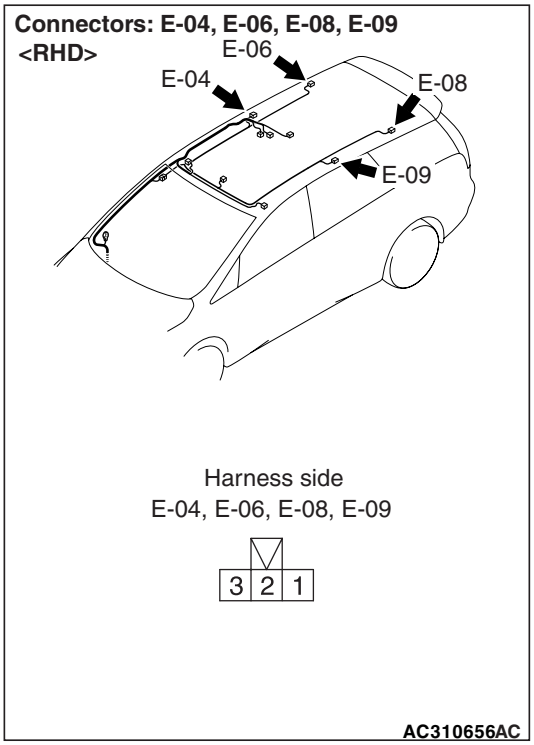

NOTE:

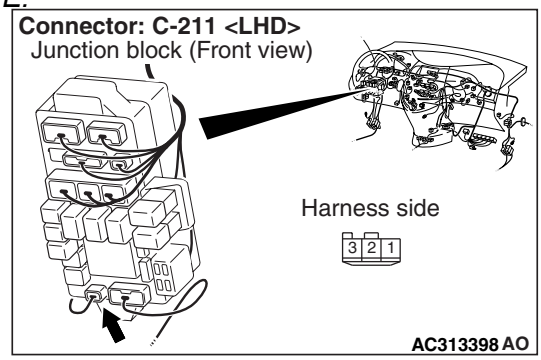

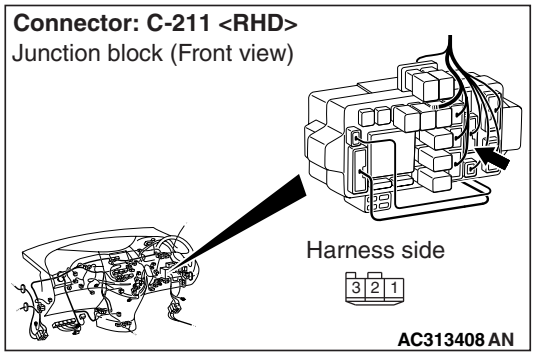

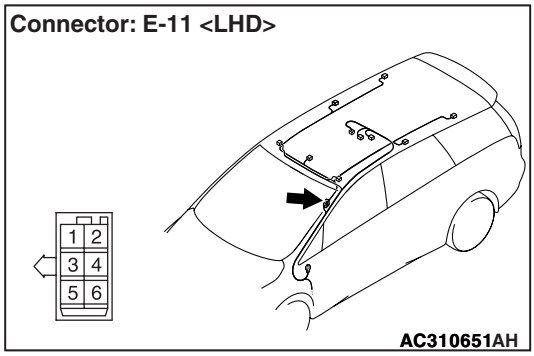

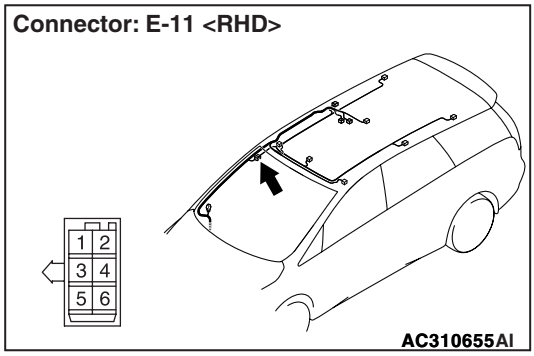

Prior to the wiring harness inspection, check intermediate connector E-11 and junction block connector C-211, and repair if necessary.

- Check the earth wires for open circuit.

Q: Is the check result normal?

YES : Replace the rear personal lamp.

NO : Repair the wiring harness.

Main Index
Group TOC

Inspection Procedure O-4: The luggage compartment lamp does not illuminate normally.

⚠ CAUTION
Whenever the ECU is replaced, ensure that the input and output signal circuits are normal.

Luggage Room Lamp Circuit

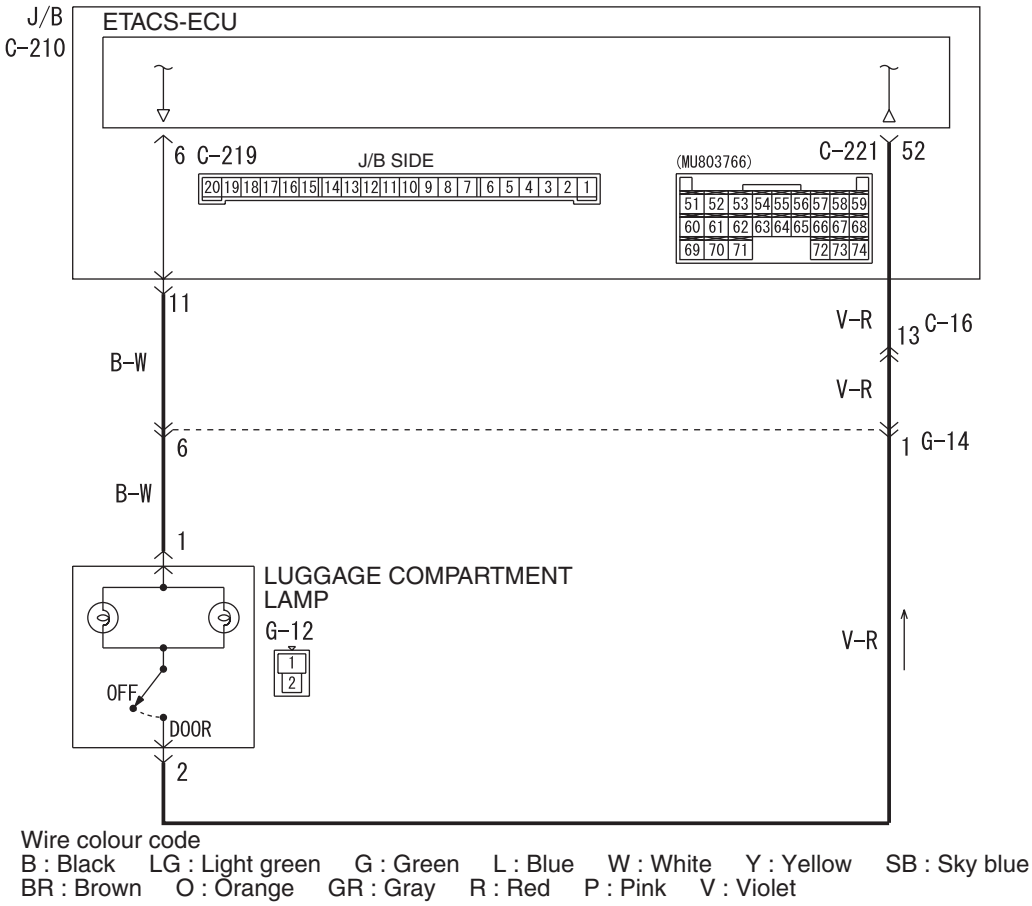

W4X54E173A

COMMENTS ON TROUBLE SYMPTOM

If the luggage compartment lamp does not turn on and off normally, wiring harness connector(s) or the bulb may be defective.

POSSIBLE CAUSES

- Malfunction of the luggage compartment lamp bulbs
- Damaged harness wires and connectors

Main Index
Group TOC

DIAGNOSTIC PROCEDURE

Step 1. Pulse check

Check the input signals below, which are related to the luggage compartment lamp.

System switch	Check condition
Driver's door switch	Driver's door is opened while all the other doors are closed.
Passenger's door switch	Passenger's door is opened while all the other doors are closed.
Rear door (RH) switch	Rear door (RH) is opened while all the other doors are closed
Rear door (LH) switch	Rear door (LH) door is opened while all the other doors are closed
Tailgate switch	Tailgate is opened while all the other doors are closed
Driver's door lock actuator switch	When the driver's door is unlocked or locked
Interior lamp ON switch	When turned from OFF to ON
Interior lamp OFF switch	When turned from ON to OFF

OK: The M.U.T.-III sounds or the voltmeter needle fluctuates.

Q: Is the check result normal?

All the signals are received normally. : Go to Step 2.

All the door switch signals are not received. : Refer to inspection procedure P-12 "All the door switch signals are not received P.54B-358."

The driver's door lock actuator switch signal is not received. : Refer to inspection procedure P-13 "The driver's door lock actuator switch signal is not received <LH drive vehicles>P.54B-364 or <RH drive vehicles>P.54B-367 ."

The interior lamp switch signal is not received. : Refer to inspection procedure P-20 "The interior lamp "all on" or "all off" switch signal is not sent to the ETACS-ECU P.54B-397."

Step 2. Connector check: G-12 luggage compartment lamp connector

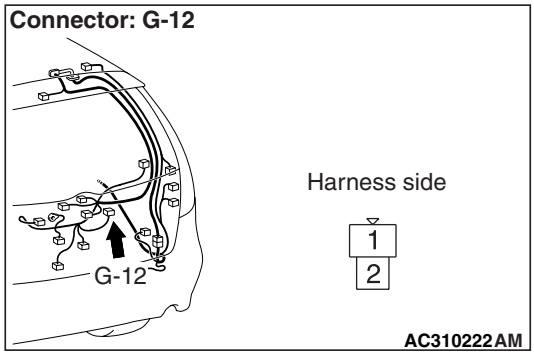

Q: Is the check result normal?

YES : Go to Step 3.

NO : Repair the defective connector.

Step 3. Check the bulbs of the luggage compartment lamp.

Check that the luggage compartment lamp bulbs are not burned out.

Q: Is the check result normal?

YES : Go to Step 4.

NO : Replace the luggage compartment lamp bulb.

Step 4. Connector check: C-221 ETACS-ECU connector

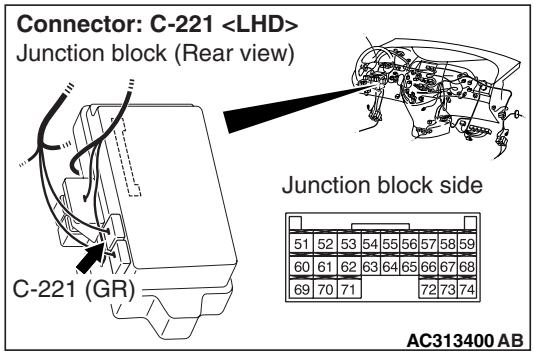

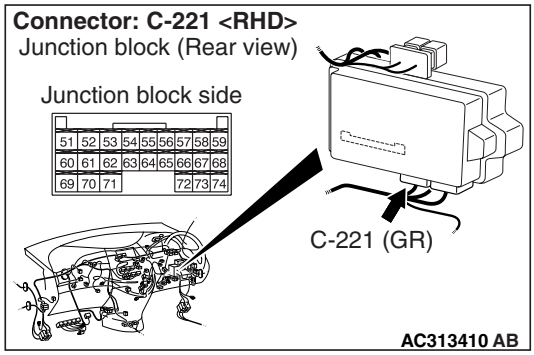

Q: Is the check result normal?

YES : Go to Step 5.

NO : Repair the defective connector.

Main Index
Group TOC

Step 5. Check the wiring harness from C-221 ETACS-ECU connector terminal No.52 to G-12 luggage compartment lamp connector terminal No.2.

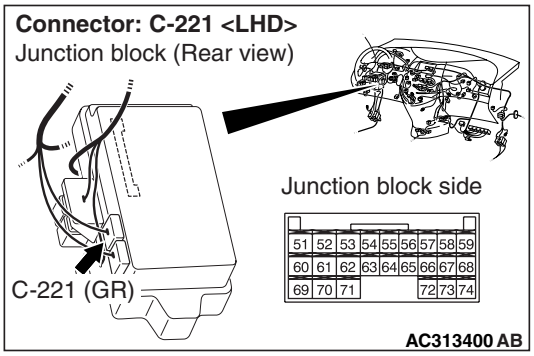

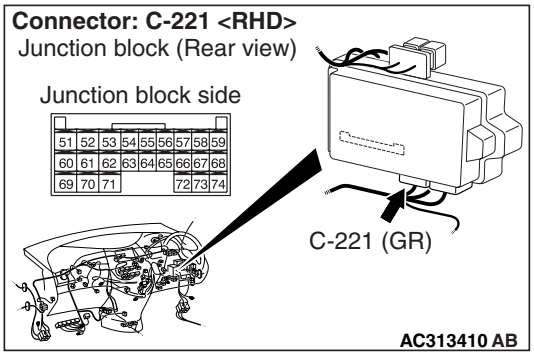

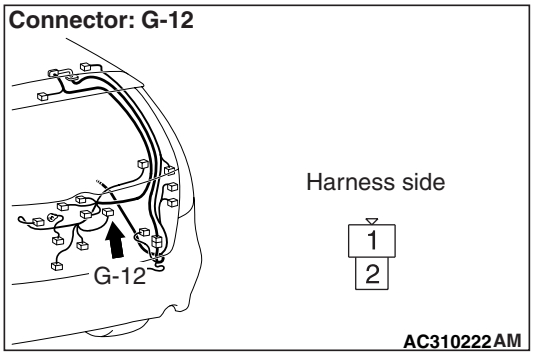

NOTE:

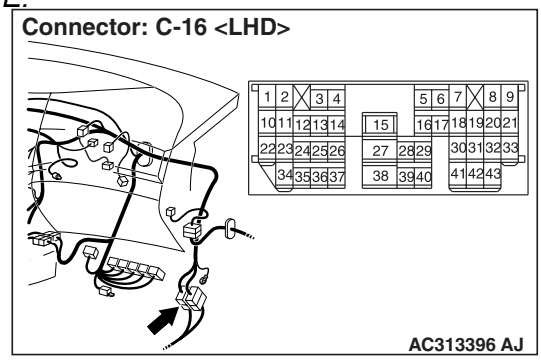

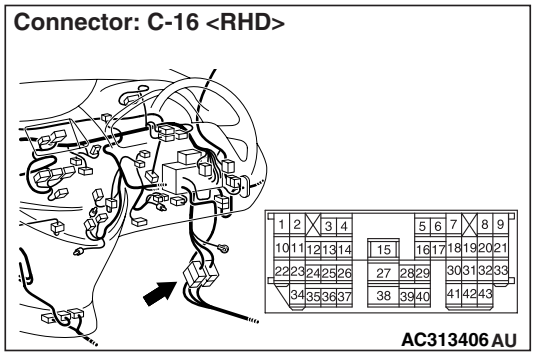

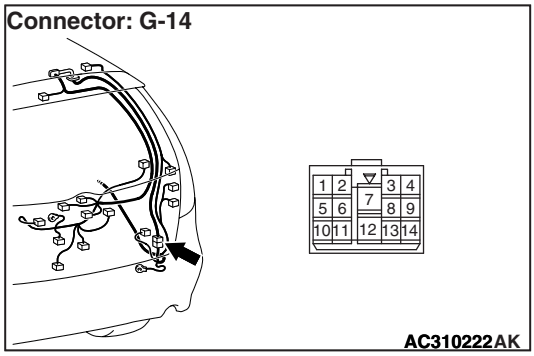

Prior to the wiring harness inspection, check intermediate connector C-16, G-14, and repair if necessary.

- Check the earth wires for open circuit.

Q: Is the check result normal?

YES : Go to Step 6.

NO : Repair the wiring harness.

Main Index
Group TOC

Step 6. Connector check: C-219 ETACS-ECU connector

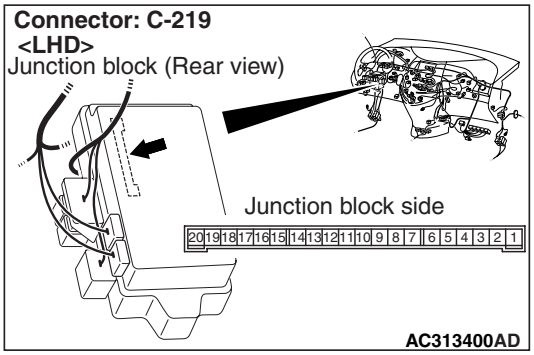

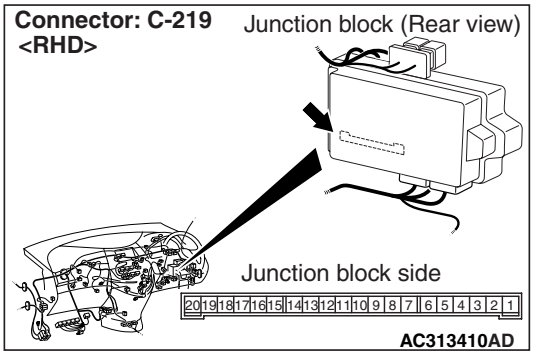

Q: Is the check result normal?

YES : Go to Step 7.

NO : Repair the defective connector.

Step 7. Check the wiring harness from C-219 ETACS-ECU connector terminal No.6 to G-12 luggage compartment lamp connector terminal No.1.

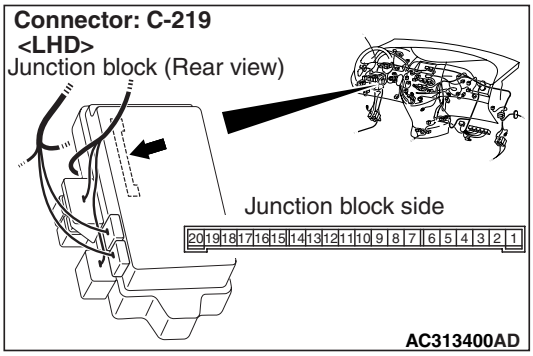

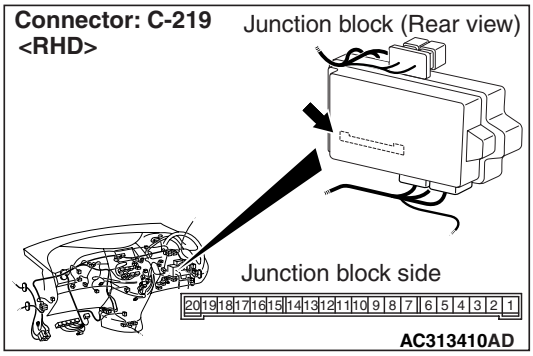

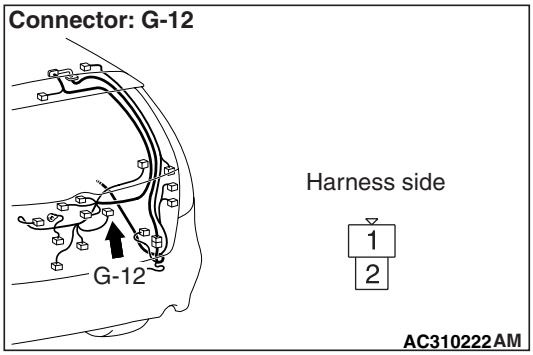

NOTE:

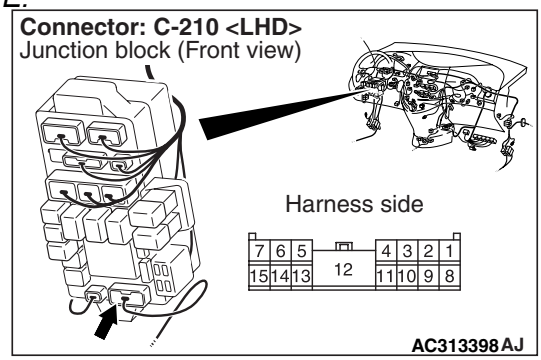

Main Index
Group TOC

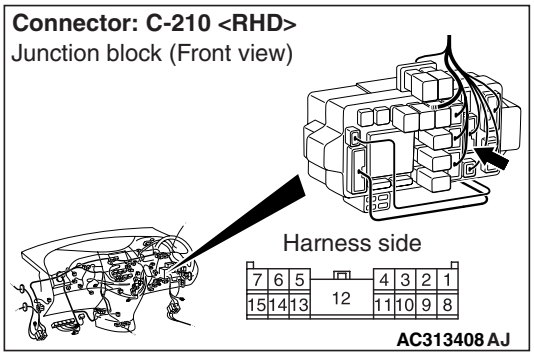

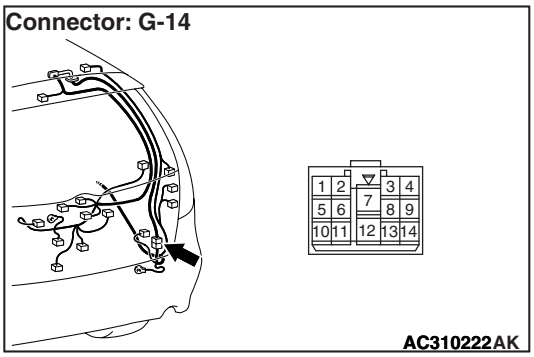

Prior to the wiring harness inspection, check intermediate connector G-14, junction block connector C-210, and repair if necessary.

- Check the power supply line for open circuit.

Q: Is the check result normal?

YES : . Go to Step 8.

NO : . Repair the wiring harness.

Step 8. Retest the system.

Check that the luggage compartment lamp illuminates and extinguishes normally.

Q: Is the check result normal?

YES : The trouble can be an intermittent malfunction (Refer to GROUP 00 – How to Cope with Intermittent Malfunction P.00-5).

NO : Replace the luggage compartment lamp.

Main Index
Group TOC

Inspection Procedure O-5: The door lamps does not illuminate normally.

⚠ CAUTION
Whenever the ECU is replaced, ensure that the input and output signal circuits are normal.

Door Lamp Circuit <LHD>

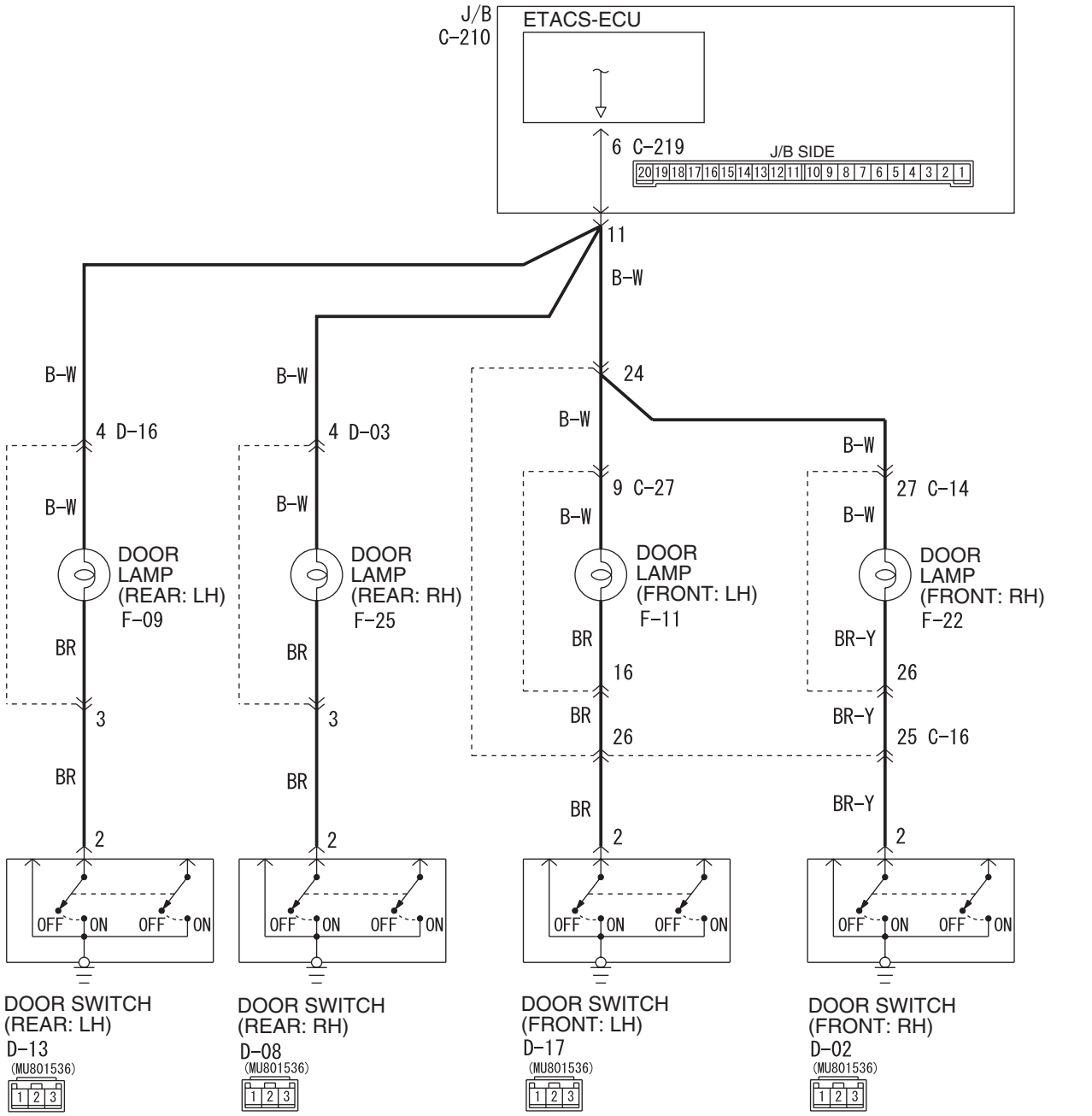

Wire colour code
B : Black LG : Light green G : Green L : Blue W : White Y : Yellow SB : Sky blue
BR : Brown O : Orange GR : Grey R : Red P : Pink V : Violet PU : Purple

W6X54X018A

Main Index
Group TOC

Door Lamp Circuit <RHD>

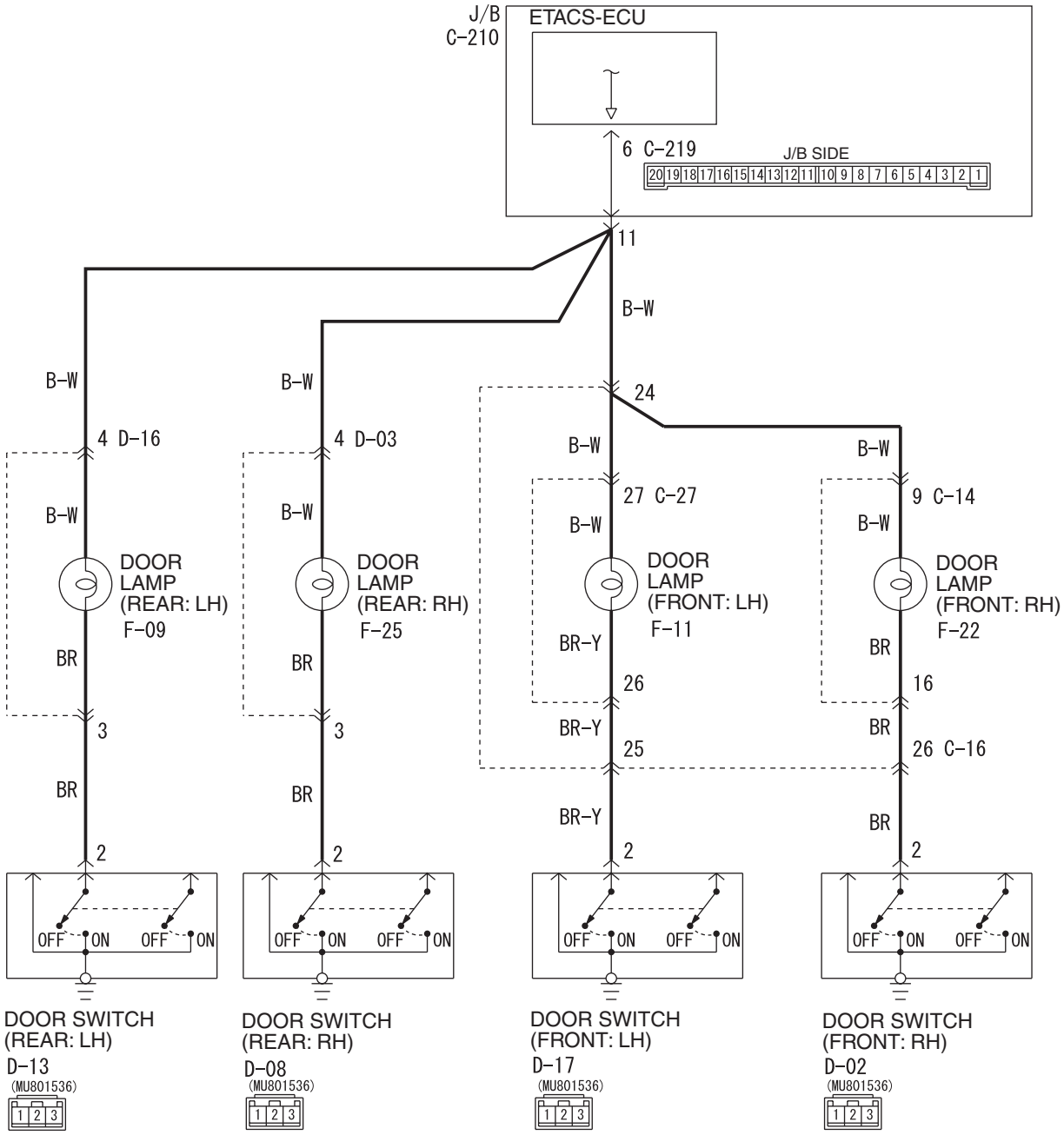

Wire colour code
B : Black LG : Light green G : Green L : Blue W : White Y : Yellow SB : Sky blue
BR : Brown O : Orange GR : Grey R : Red P : Pink V : Violet PU : Purple

W4X54X192A

Main Index
Group TOC

COMMENTS ON TROUBLE SYMPTOM

The door lamps are energised through the ETACS-ECU. If a door is opened, the relevant door lamp will illuminate.
If this function does not work normally, these input signal circuit(s) or the ETACS-ECU may be defective.

POSSIBLE CAUSES

- Malfunction of the door lamp bulbs
- Malfunction of the door switches
- Malfunction of the ETACS-ECU
- Damaged harness wires and connectors

DIAGNOSTIC PROCEDURE

Step 1. Connector check: F-11 door lamp (front: LH), F-22 door lamp (front: RH) connector, F-09 door lamp (rear: LH), F-25 door lamp (rear: RH)

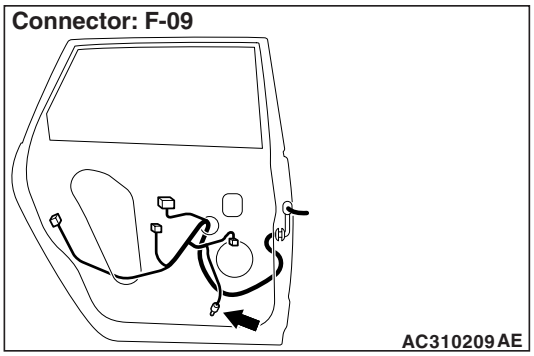

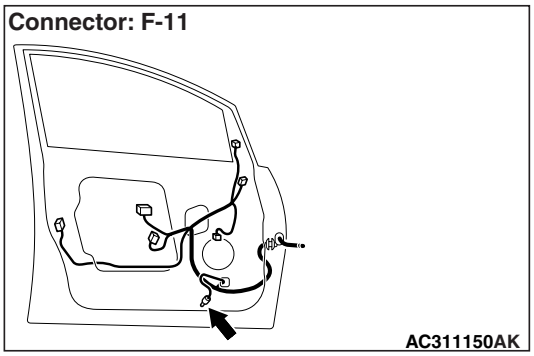

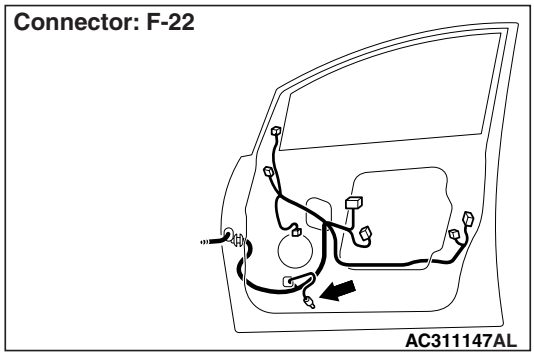

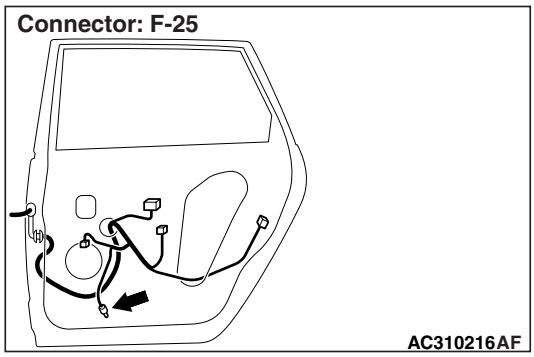

Q: Is the check result normal?
YES : Go to Step 2.
NO : Repair the defective connector.

Step 2. Check the bulbs of the door lamp.
Check that the door lamp bulbs are not burned out.

Q: Is the check result normal?
YES : Go to Step 3.
NO : Replace the door lamp bulb.

Main Index
Group TOC

Step 3. Connector check: D-17 door switch (front: LH), D-02 door switch (front: RH) connector, D-13 door switch (rear: LH) connector, D-08 door switch (rear: RH) connector

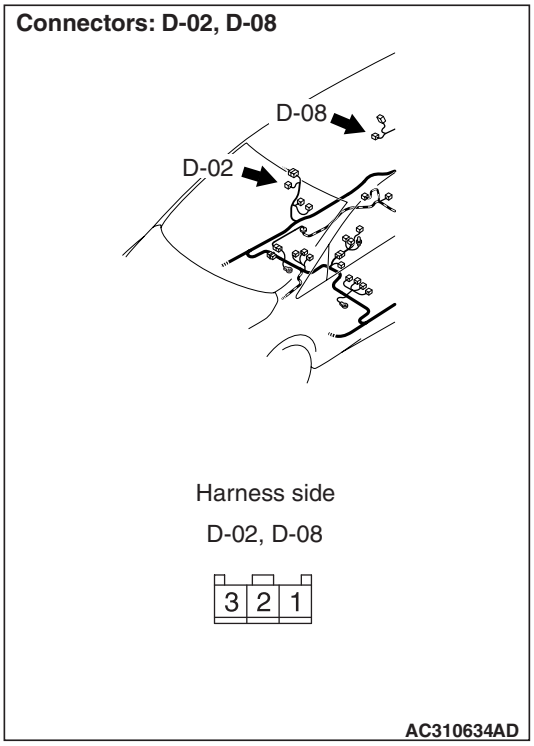

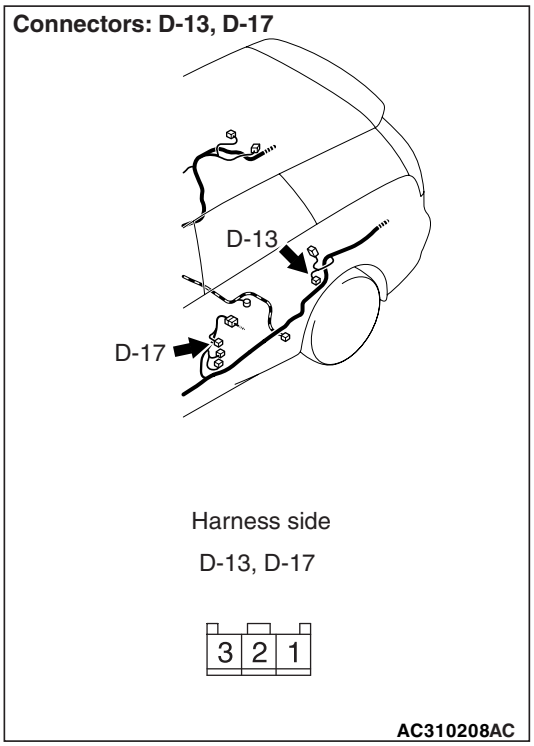

Q: Is the check result normal?
YES : Go to Step 4.
NO : Repair the defective connector.

Step 4. Check the door switch.
Check the door switch, which corresponds to the defective door lamp (Refer to GROUP 42 – Door P.42-36).

Q: Is the check result normal?
YES : Go to Step 5.
NO : Replace the door lamp bulb.

Step 5. Connector check: C-219 ETACS-ECU connector

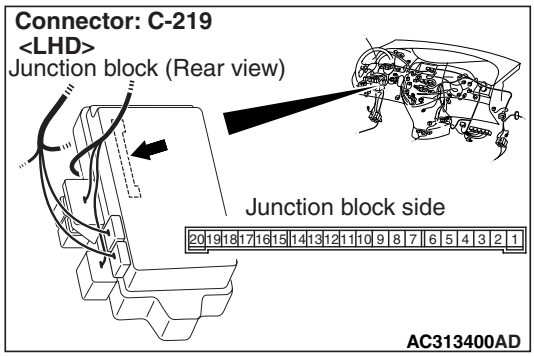

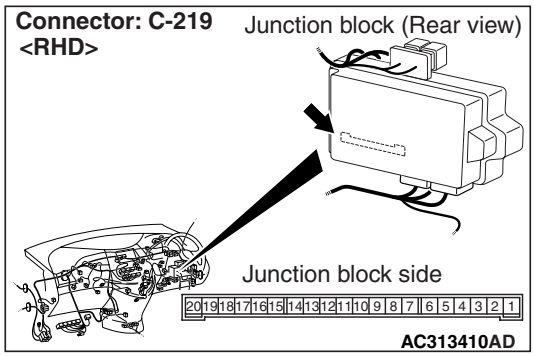

Q: Is the check result normal?
YES : Go to Step 6.
NO : Repair the defective connector.

Main Index
Group TOC

Step 6. Check the wiring harness from C-219 ETACS-ECU connector terminal No.6 to D-17 door switch (front: LH) or D-02 door switch (front: RH) connector, D-13 door switch (rear: LH) connector, D-08 door switch (rear: RH) connector terminal No.2.

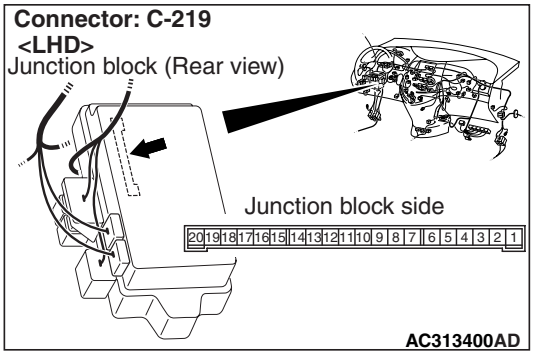

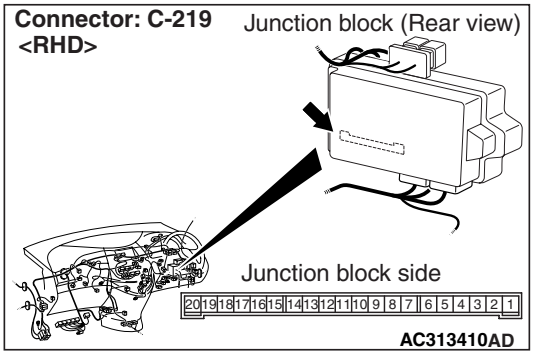

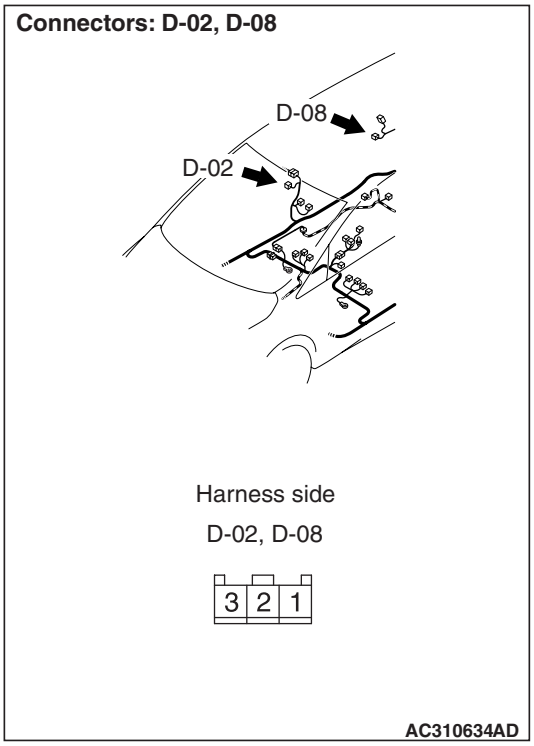

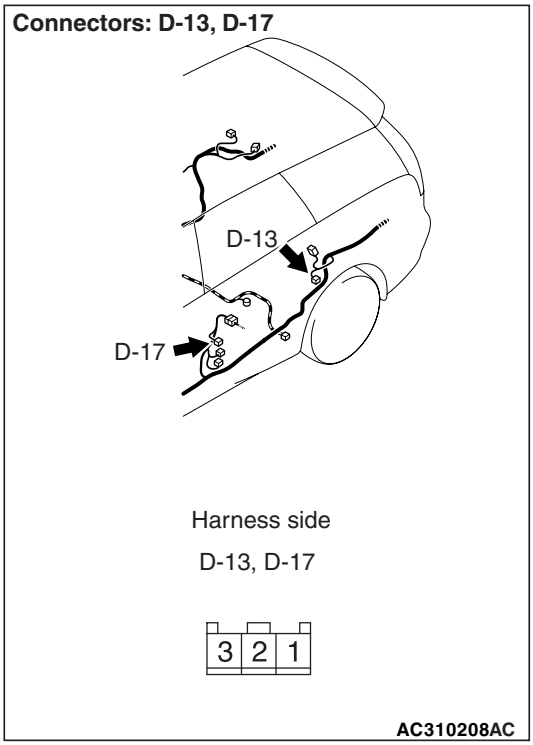

NOTE:

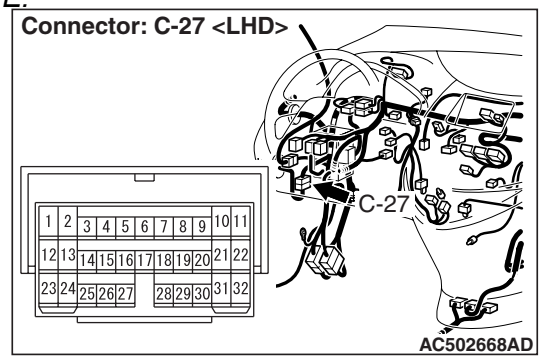

Main Index
Group TOC

Connectors: C-14, C-16

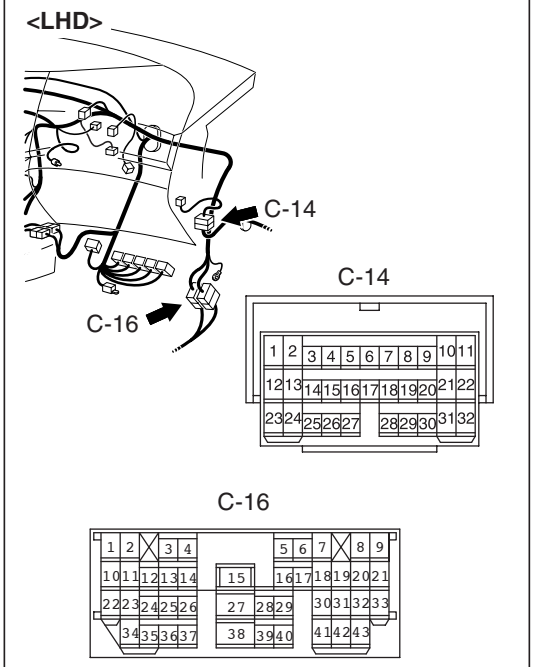

AC313397AD

Connectors: D-03, D-16 <LHD>

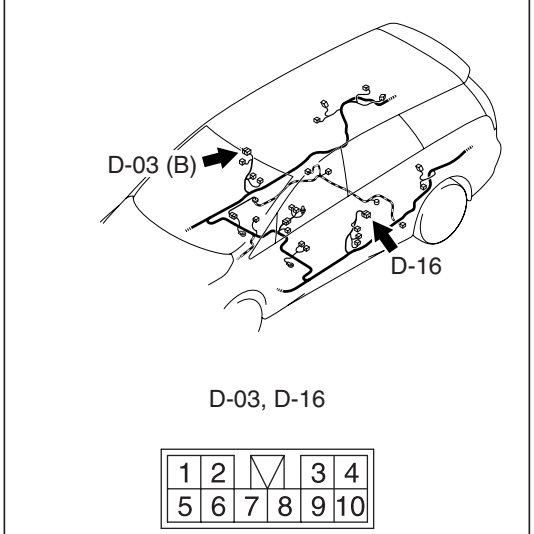

AC313426AC

Connector: C-210 <LHD>
Junction block (Front view)

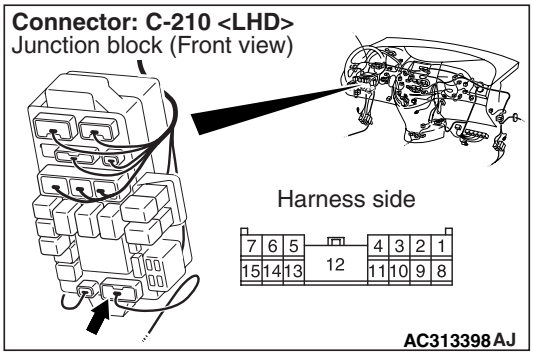

AC313398AJ

<LH drive vehicles>Prior to the wiring harness inspection, check intermediate connector C-14 <door switch (front: RH)>, C-16 <door switch (front: RH), door switch (front: LH)>, C-27 <door switch (front: LH)>, D-03 <door switch (rear: RH)>, D-16 <door switch (rear: LH)>, junction block connector C-210, and repair if necessary.

NOTE:

Connectors: C-14, C-16
<RHD>

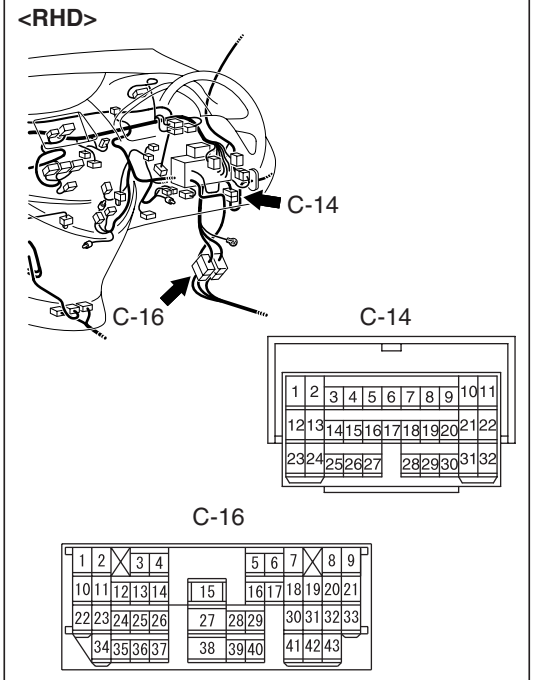

AC313407AY

Connector: C-27

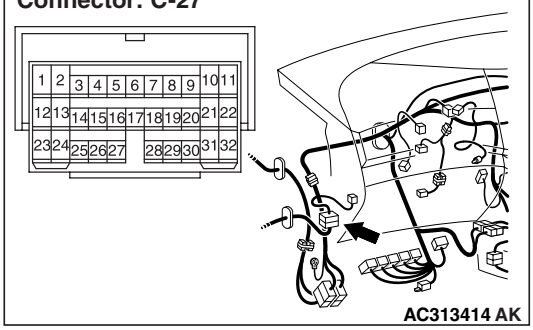

AC313414AK

Main Index
Group TOC

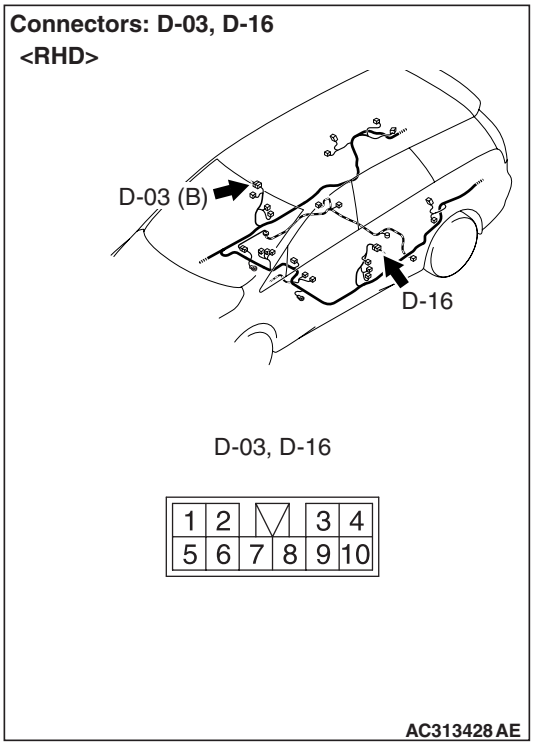

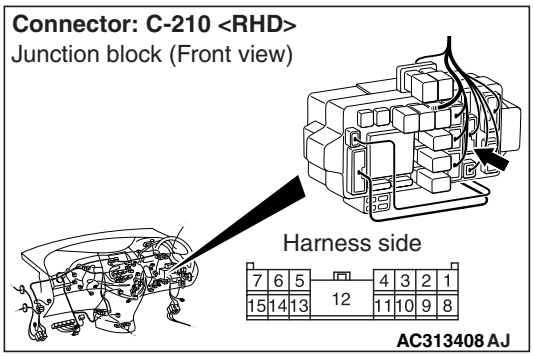

<RH drive vehicles> Prior to the wiring harness inspection, check intermediate connector C-14 <door switch (front: RH)>, C-16 <door switch (front: RH) and door switch (front: LH)>, C-27 <door switch (front: LH)>, D-03 <door switch (rear: RH)>, D-16 <door switch (rear: LH)>, junction block connector C-210, and repair if necessary.

Q: Is the check result normal?

YES : . The trouble can be an intermittent malfunction (Refer to GROUP 00 – How to Cope with Intermittent Malfunction P.00-5).

NO : . Repair the wiring harness.

Main Index
Group TOC

Inspection Procedure O-6: Interior lamp automatic shutoff function does not work normally. <Vehicles with keyless entry system>

⚠ CAUTION
Whenever the ECU is replaced, ensure that the input and output signal circuits are normal.

Interior Lamp Automatic Shut-off Function Circuit

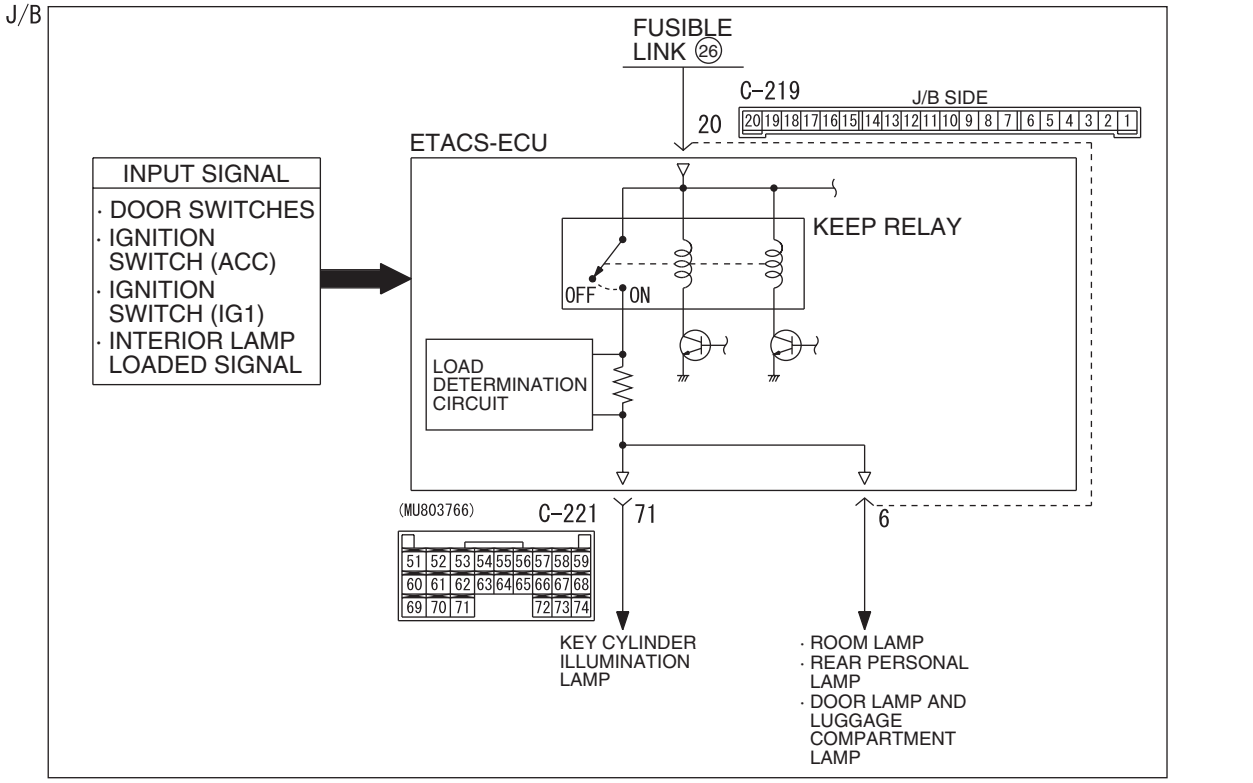

COMMENTS ON TROUBLE SYMPTOM

The ETACS-ECU operates the interior lamp automatic-shutdown function in accordance with the input signals below.

- Ignition switch (ACC)
- Ignition switch (IG1)
- Driver's door switch
- All of the door switches
- Interior lamp loaded signal

If this function does not work normally, these input signal circuit(s) or the ETACS-ECU may be defective. Note that this function can be disabled/enabled by the adjustment function (default setting; enabled).

POSSIBLE CAUSES

- Malfunction of the door switches
- Malfunction of the room lamp
- Malfunction of the ETACS-ECU
- Damaged harness wires and connectors

DIAGNOSTIC PROCEDURE

Step 1. Check the power supply circuit.
When the ignition switch is turned to the LOCK (OFF) position, check if the hazard warning lamps illuminate.

Q: Is the check result normal?
YES : Go to Step 2.
NO : Refer to inspection procedure A-2 "Check the ETACS-ECU battery power supply circuit P.54B-71."

Main Index
Group TOC

Step 2. Pulse check

Check the input signals below, which are related to the interior lamps.

System switch	Check condition
Ignition switch (ACC)	When turned from the LOCK (OFF) position to the ACC position
Ignition switch (IG1)	When turned from ACC to ON
Driver's door switch	Driver's door is opened while all the other doors are closed.
Passenger's door switch	Passenger's door is opened while all the other doors are closed.
Rear door (RH) switch	Rear door (RH) is opened while all the other doors are closed
Rear door (LH) switch	Rear door (LH) door is opened while all the other doors are closed
Tailgate switch	TAilgate is opened while all the other doors are closed
Interior lamp loaded signal	When a load is applied through multi-purpose fuse No.18

OK: The M.U.T.-III sounds or the voltmeter needle fluctuates.

Q: Is the check result normal?

All the signals are received normally. : Go to Step 3.

The ignition switch (ACC) signal is not received. : Refer to inspection procedure P-1 "The ignition switch (ACC) signal is not received P.54B-319."

The ignition switch (IG1) signal is not received. : Refer to inspection procedure P-2 "The ignition switch (IG1) signal is not received P.54B-322."

All the door switch signals are not received. : Refer to inspection procedure P-12 "All the door switch signals are not received P.54B-358."

Interior lamp loaded signal is not detected : Refer to inspection procedure P-22 "Interior lamp loaded signal is not detected P.54B-404."

Step 3. Check the SWS monitor customized function.

Check that the interior lamp automatic-shutdown function has been enabled by using the SWS monitor customize function.

⚠ CAUTION

The SWS monitor must be used in order to confirm and change that setting. Use the SWS monitor to confirm and/or change the customized function.

Q: Is the check result normal?

YES : Go to Step 4.

NO : Enable the interior lamp automatic-shutdown function by using the SWS monitor customize function (Refer to GROUP 54C – Customize adjustment P.54C-432).

Step 4. Retest the system.

Check that the interior lamp automatic-shutdown function works normally.

Q: Is the check result normal?

YES : The trouble can be an intermittent malfunction (Refer to GROUP 00 – How to Cope with Intermittent Malfunction P.00-5).

NO : Replace the ETACS-ECU.

Main Index
Group TOC

Inspection Procedure O-7: The door-ajar warning lamp does not illuminate/extinguish normally.

⚠ CAUTION
Whenever the ECU is replaced, ensure that the input and output signal circuits are normal.

Door-Ajar Warning Lamp Function

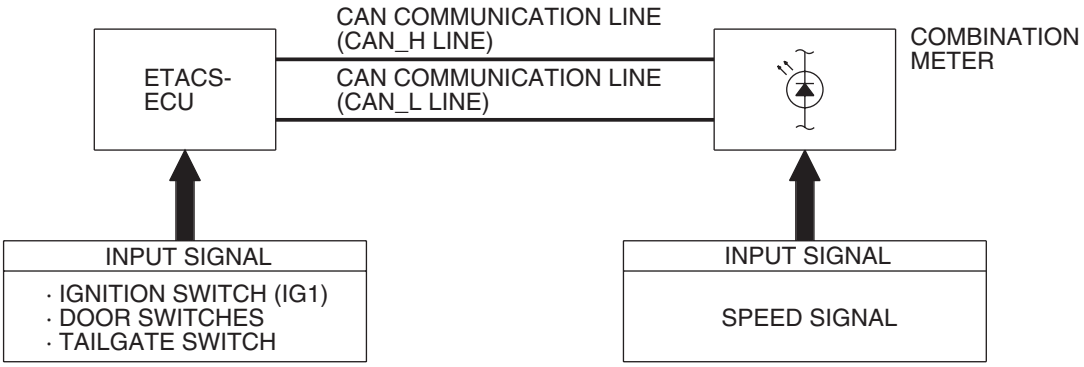

W4X54X049A

COMMENTS ON TROUBLE SYMPTOM

If the door-ajar warning lamp does not work normally, these input signal circuits or the ETACS-ECU may be defective.

POSSIBLE CAUSES

- The combination meter may be defective
- The ETACS-ECU may be defective
- Damaged harness wires and connectors

DIAGNOSIS PROCEDURE

Step 1. Check the door lamp.
When the door is opened or closed, check that the door lamp illuminate/go off normally.

Q: Are the fog lamps operating properly?
YES : Go to Step 2.
NO : Refer to Inspection Procedure O-5 "The door lamp illuminate normally P.54B-308."

Step 2. M.U.T.-III CAN bus diagnostics.
Use the M.U.T.-III to diagnose the CAN bus lines.

Q: Is the check result normal?
YES : Go to Step 3.
NO : Repair the CAN bus line (Refer to GROUP 54F, Diagnosis P.54F-13).

Step 3. Check for combination meter diagnosis code.
Check whether the combination meter-related diagnosis code is set.

Q: Is the diagnosis code set?
YES : Diagnose the combination meter (Refer to GROUP 54A – Troubleshooting P.54A-73).
NO : Go to Step 4.

Step 4. Check the power supply circuit.
When the ignition switch is turned to the LOCK (OFF) position, check if the hazard warning lamps illuminate.

Q: Is the check result normal?
YES : Go to Step 5.
NO : Refer to inspection procedure A-2 "Check the ETACS-ECU battery power supply circuit P.54B-71."

Main Index
Group TOC

Step 5. Pulse check

Check the input signals below, which are related to the door-ajar warning lamp.

System switch	Check conditions
Ignition switch (IG1)	When turned from ACC to ON
Driver's door switch	Driver's door is opened while all the other doors are closed.
Passenger's door switch	Passenger's door is opened while all the other doors are closed.
Rear door (RH) switch	Rear door (RH) is opened while all the other doors are closed
Rear door (LH) switch	Rear door (LH) door is opened while all the other doors are closed
Vehicle speed signal	When the vehicle speed has reached 10 km/h or more

OK: The M.U.T.-III sounds or the voltmeter needle fluctuates.

Q: Are the check result normal?

All the signals are received normally. : . Go to Step 6.

The ignition switch (IG1) signal is not received. : . Refer to inspection procedure P-2 "The ignition switch (IG1) signal is not received P.54B-322."

All the door switch signals are not received. : . Refer to inspection procedure P-12 "All the door switch signals are not received P.54B-358."

The vehicle speed signal is not received. : . Refer to inspection procedure P-23 "The vehicle speed signal is not received P.54B-408."

Step 6. M.U.T.-III actuator test

Perform the actuator test for the combination meter, and check that the door-ajar warning lamp illuminates (Refer to GROUP 54A – Combination Meter P.54A-95).

Q: Is the check result normal?

YES : Replace the ETACS-ECU.

NO : Replace the combination meter.

Main Index
Group TOC

INPUT SIGNAL PROCEDURES

INSPECTION PROCEDURE P-1: The ignition switch (ACC) signal is not received.

⚠ CAUTION
Whenever the ECU is replaced, ensure that the input signal circuit is normal.

Ignition Switch (ACC) Input Circuit

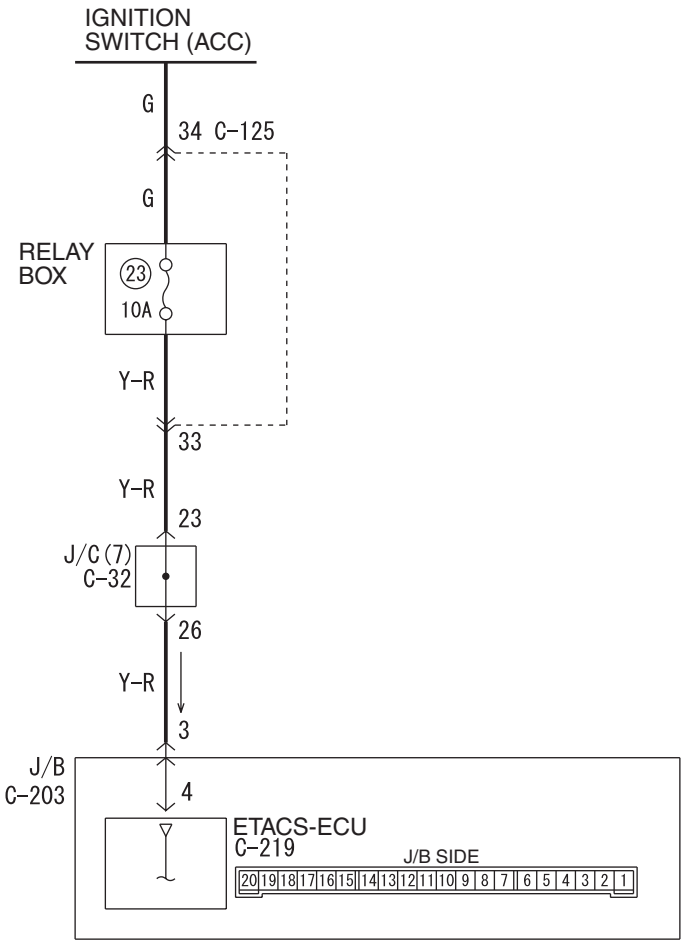

Wire colour code
B : Black LG : Light green G : Green L : Blue W : White Y : Yellow SB : Sky blue
BR : Brown O : Orange GR : Grey R : Red P : Pink V : Violet PU : Purple

W6X54X028A

COMMENTS ON TROUBLE SYMPTOM

Input signal from the ignition switch (ACC) is used to operate the functions below. If the signal is abnormal, these functions will not work normally.

- Seat belt warning buzzer function
- Door-ajar warning buzzer function
- Sunroof timer function
- Windshield wiper and washer
- Rear wiper and washer
- Electric retractable remote controlled mirror
- Interior lamp automatic-shutdown function

POSSIBLE CAUSES

- Malfunction of the ETACS-ECU
- Damaged harness wires and connectors

Main Index
Group TOC

DIAGNOSTIC PROCEDURE

Step 1. Connector check: C-219 ETACS-ECU connector

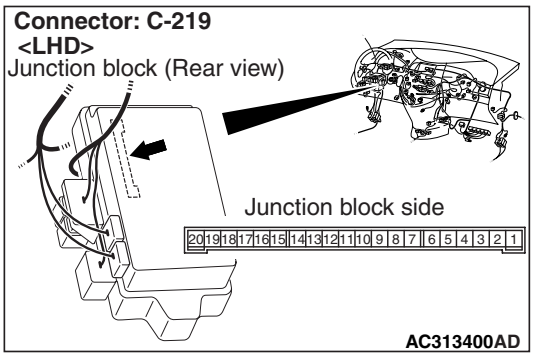

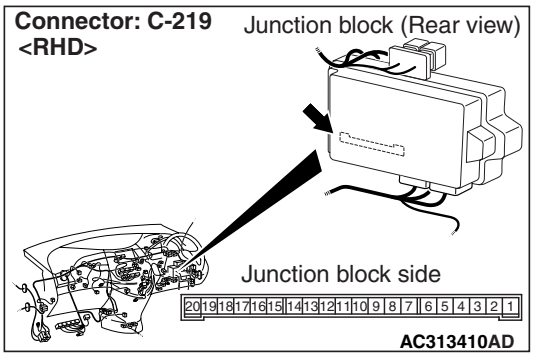

Q: Is the check result normal?
YES : Go to Step 2.
NO : Repair the defective connector.

Step 2. Voltage measurement at the C-219 ETACS-ECU connector.

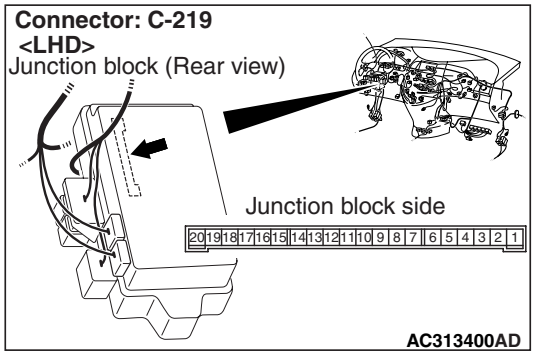

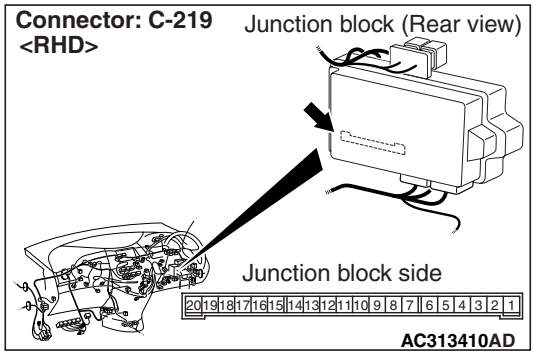

(1) Remove the ETACS-ECU, and measure at the junction block side.
(2) Ignition switch: ACC position

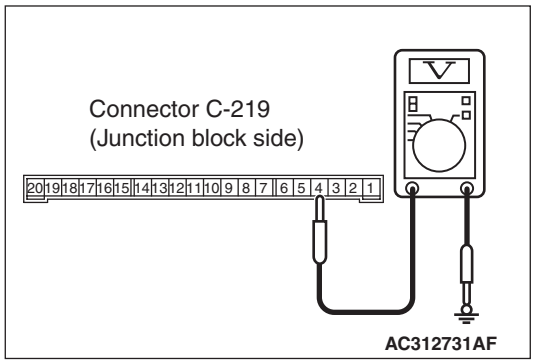

(3) Voltage between C-219 ETACS-ECU connector terminal No.4 and body earth

OK: System voltage

Q: Is the check result normal?
YES : Go to Step 4.
NO : Go to Step 3.

Main Index
Group TOC

Step 3. Check the wiring harness between C-219 ETACS-ECU connector terminal No.4 and the ignition switch (ACC).

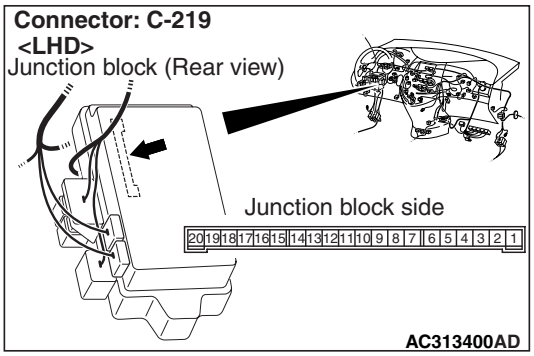

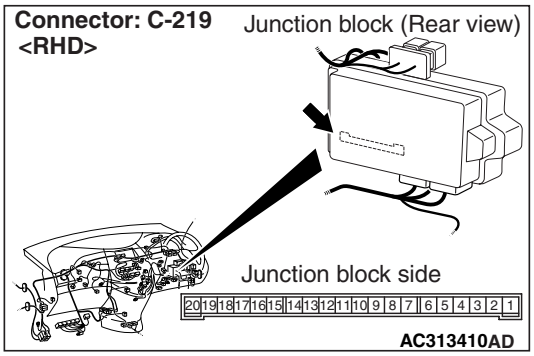

NOTE:

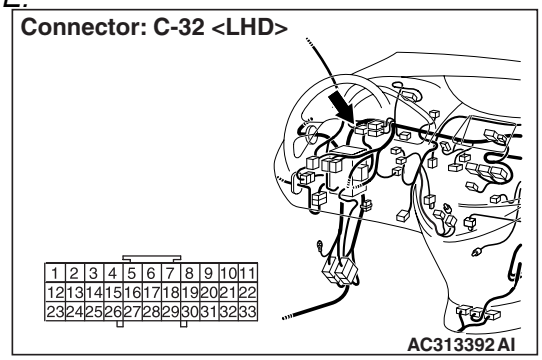

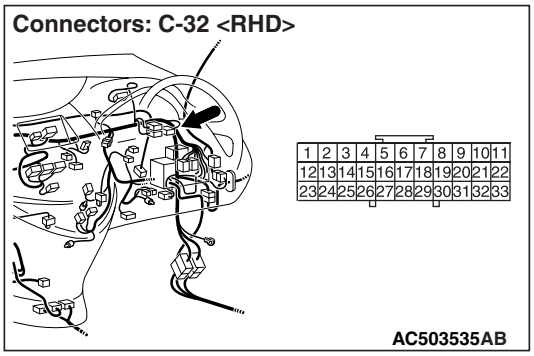

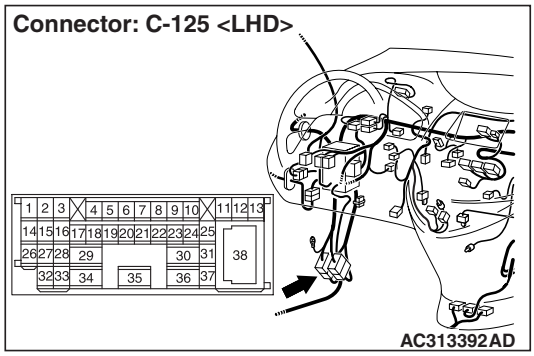

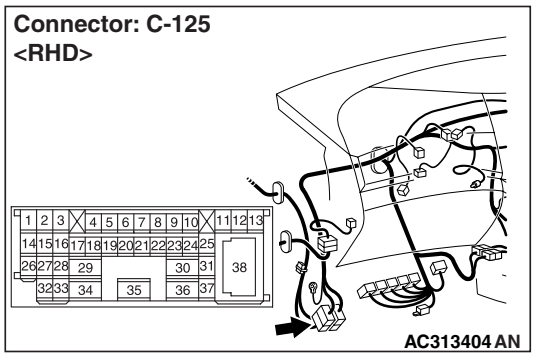

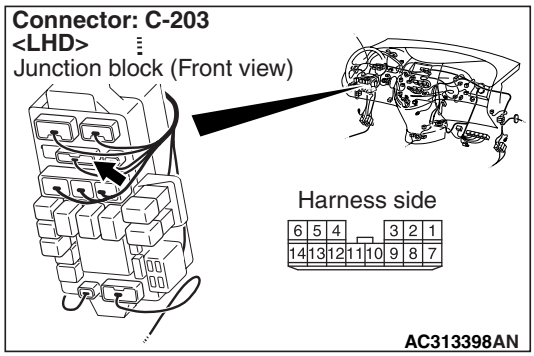

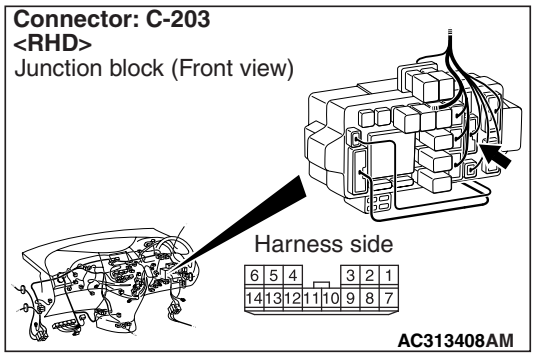

Prior to the wiring harness inspection, check intermediate connector C-125, and joint connector C-32, and junction block connector C-203, and repair if necessary.

- Check the power supply line for open circuit.

Q: Is the check result normal?

YES : The trouble can be an intermittent malfunction (Refer to GROUP 00 – How to Cope with Intermittent Malfunction P.00-5).

NO : Repair the wiring harness.

Main Index
Group TOC

Step 4. Retest the system.
Check that the ignition switch (ACC) signal is received normally.

Q: Is the check result normal?
YES : . The trouble can be an intermittent malfunction (Refer to GROUP 00 – How to Cope with Intermittent Malfunction P.00-5).
NO : . Replace the ETACS-ECU.

INSPECTION PROCEDURE P-2: The ignition switch (IG1) signal is not received.

⚠ CAUTION
Whenever the ECU is replaced, ensure that the input signal circuit is normal.

Ignition Switch (IG1) Input Circuit

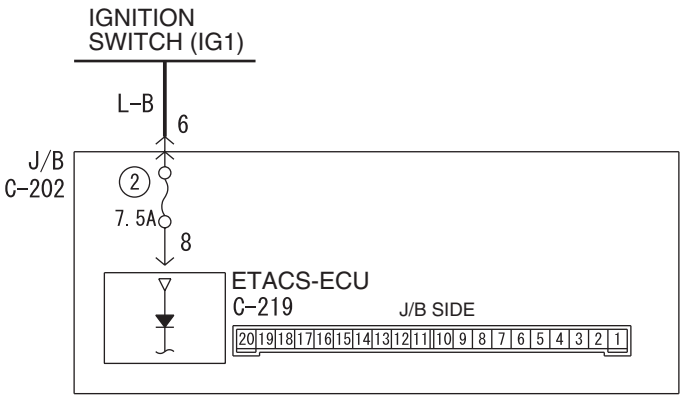

Wire colour code
B : Black LG : Light green G : Green L : Blue W : White Y : Yellow SB : Sky blue
BR : Brown O : Orange GR : Gray R : Red P : Pink V : Violet

W4X54E110A

COMMENTS ON TROUBLE SYMPTOM

Input signal from the ignition switch (IG1) is used to operate the functions below. If the signal is abnormal, these functions will not work normally.

- Lamp reminder function
- Door-ajar warning buzzer function
- Turn-signal lamp operation sound function
- Power window
- Ignition key cylinder illumination lamp
- Seat belt indicator
- Head and tail lamps
- Headlamp automatic-shutdown function
- Turn-signal lamp
- Interior lamps
- Interior lamp automatic-shutdown function

POSSIBLE CAUSES

- Malfunction of the ETACS-ECU
- Damaged harness wires and connectors

Main Index
Group TOC

DIAGNOSTIC PROCEDURE

Step 1. Connector check: C-219 ETACS-ECU connector

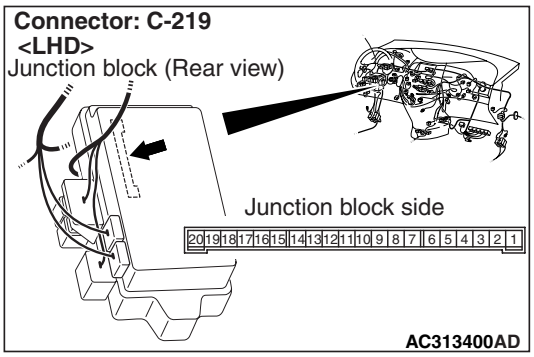

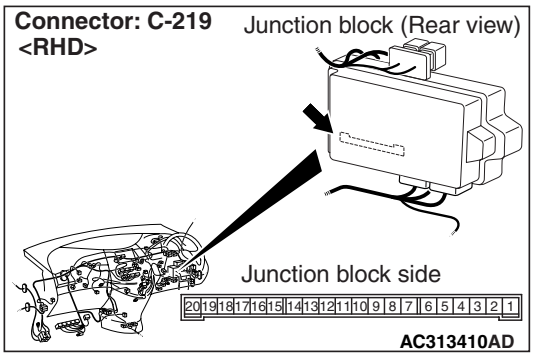

Q: Is the check result normal?
YES : Go to Step 2.
NO : Repair the defective connector.

Step 2. Voltage measurement at the C-219 ETACS-ECU connector.

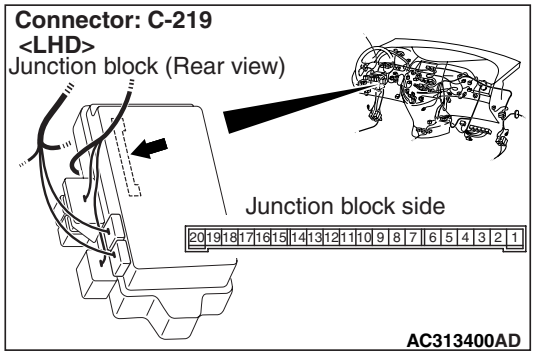

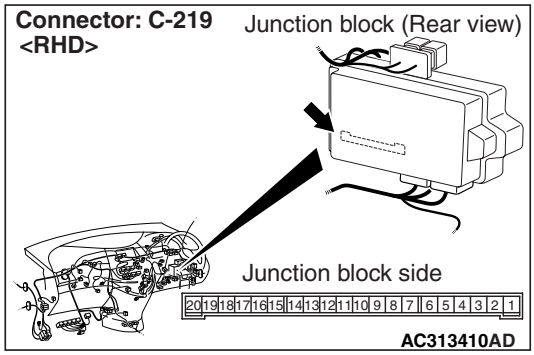

(1) Remove the ETACS-ECU, and measure at the junction block side.
(2) Ignition switch: ON position

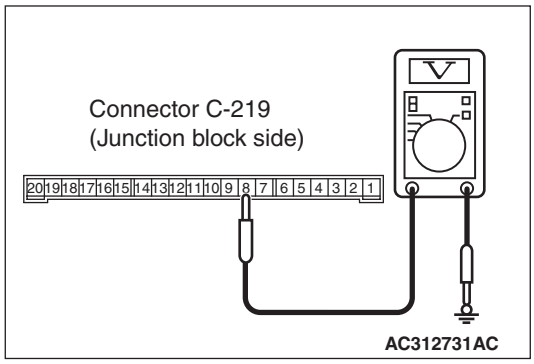

(3) Voltage between C-219 ETACS-ECU connector terminal No.8 and body earth

OK: System voltage

Q: Is the check result normal?
YES : Go to Step 4.
NO : Go to Step 3.

Main Index
Group TOC

Step 3. Check the wiring harness between C-219 ETACS-ECU connector terminal No.8 and the ignition switch (IG1).

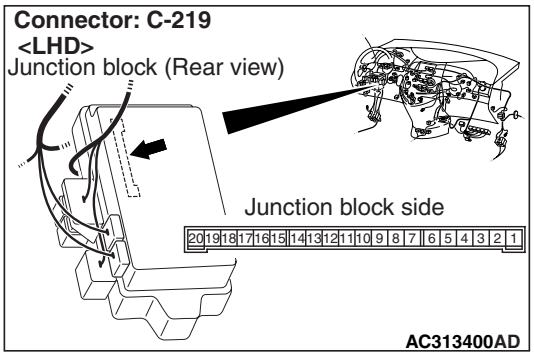

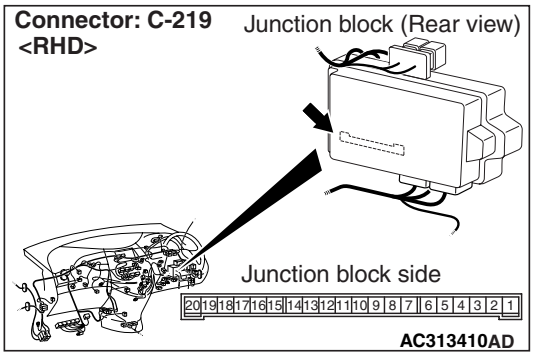

NOTE:

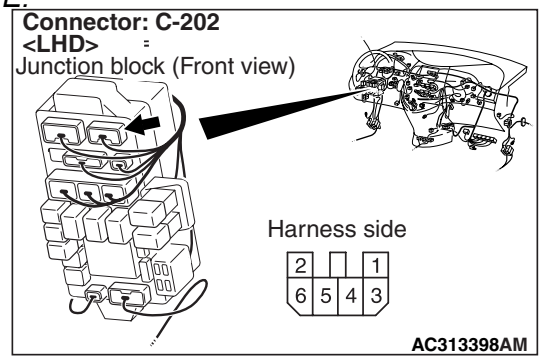

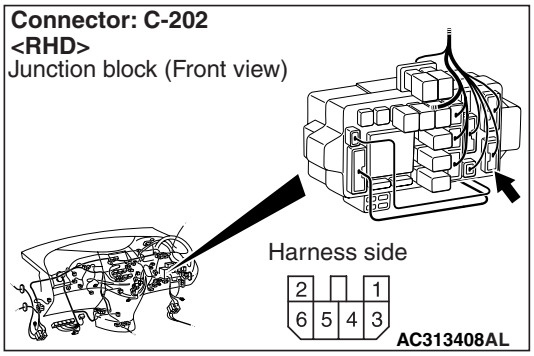

Prior to the wiring harness inspection, check junction block connector C-202, and repair if necessary.

- Check the power supply line for open circuit.

Q: Is the check result normal?

YES : The trouble can be an intermittent malfunction (Refer to GROUP 00 – How to Cope with Intermittent Malfunction P.00-5).

NO : Repair the wiring harness.

Step 4. Retest the system.

Check that the ignition switch (IG1) signal is received normally.

Q: Is the check result normal?

YES : The trouble can be an intermittent malfunction (Refer to GROUP 00 – How to Cope with Intermittent Malfunction P.00-5).

NO : Replace the ETACS-ECU.

Main Index
Group TOC

INSPECTION PROCEDURE P-3: The back-up lamp switch signal is not received. <M/T>

⚠ CAUTION
Whenever the ECU is replaced, ensure that the input signal circuit is normal.

Back-up Lamp Switch Input Circuit

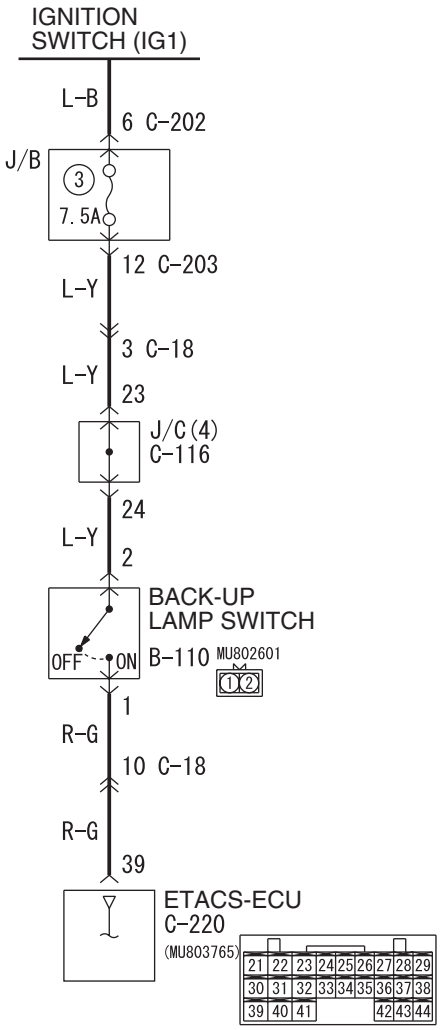

Wire colour code
B : Black LG : Light green G : Green L : Blue W : White Y : Yellow SB : Sky blue
BR : Brown O : Orange GR : Grey R : Red P : Pink V : Violet PU : Purple

W4X54X195A

COMMENTS ON TROUBLE SYMPTOM

Input signal from the back-up lamp switch is used to operate the rear wiper. If the signal is abnormal, the rear wiper will not work normally.

POSSIBLE CAUSES

- Malfunction of the back-up lamp switch
- Malfunction of the ETACS-ECU
- Damaged harness wires and connectors

Main Index
Group TOC

DIAGNOSIS PROCEDURE

Step 1. Connector check: B-110 back-up lamp switch connector and C-220 ETACS-ECU connector

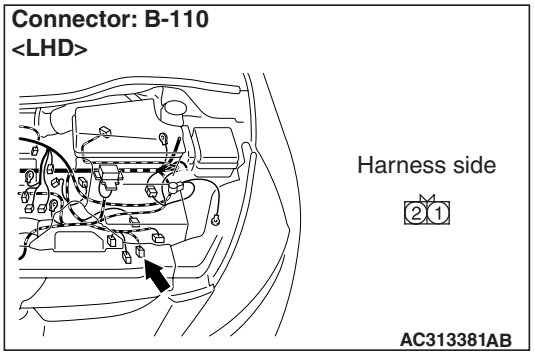

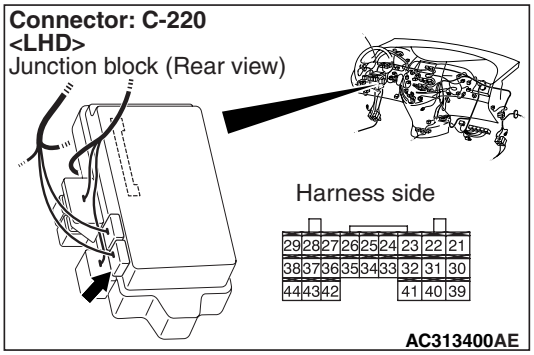

Q: Is the check result normal?
YES : Go to Step 2.
NO : Repair the defective connector.

Step 2. Check the back-up lamp switch

Check the back-up lamp switch (Refer to GROUP 22B – Transmission P.22B-18).

Q: Is the check result normal?
YES : Go to Step 3.
NO : Replace the inhibitor switch.

Step 3. Voltage measurement C-220 ETACS-ECU connector.

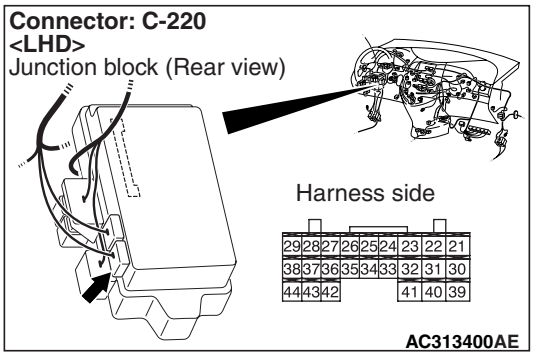

(1) Disconnect the connector, and measure at the wiring harness side.
(2) Ignition switch: ON
(3) Shift position: R position

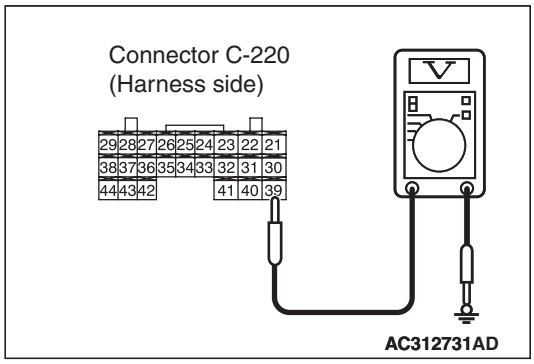

(4) Voltage between C-220 ETACS-ECU connector terminal No.39 and body earth

OK: System voltage

Q: Is the check result normal?
YES : Replace the ETACS-ECU.
NO : Go to Step 4.

Step 4. Voltage measurement at the B-110 back-up lamp switch connector.

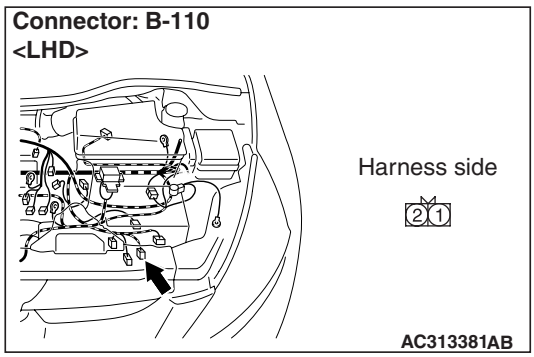

(1) Disconnect the connector, and measure at the wiring harness side.
(2) Ignition switch: ON

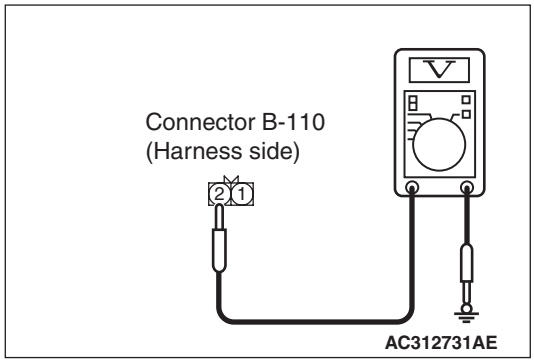

(3) Voltage between B-110 back-up lamp switch connector terminal No.2 and body earth

OK: System voltage

Q: Is the check result normal?
YES : Go to Step 5.
NO : Go to Step 6.

Step 5. Check the wiring harness between B-110 back-up lamp switch connector terminal No.1 and C-220 ETACS-ECU connector terminal No.39.

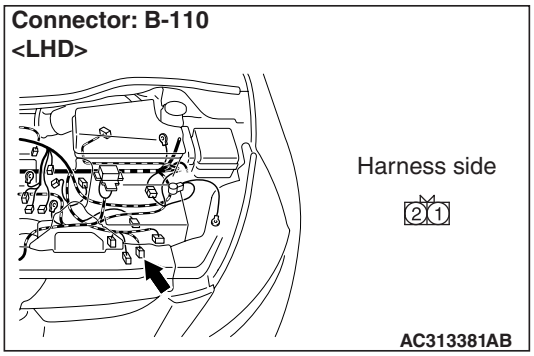

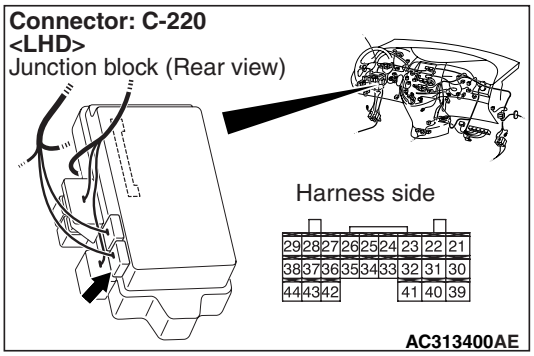

NOTE:

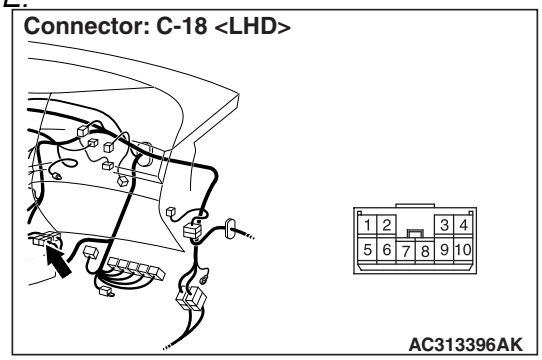

Prior to the wiring harness inspection, check intermediate connector C-18, and repair if necessary.

- Check the input line for open circuit.

Q: Is the check result normal?

YES : Go to Step 7.

NO : Repair the wiring harness.

Step 6. Check the wiring harness between B-110 back-up lamp switch connector terminal No.2 and the ignition switch (IG1).

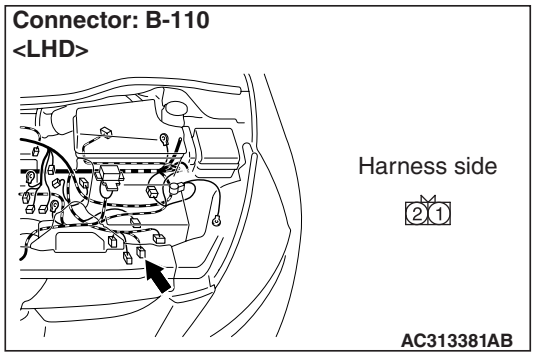

NOTE:

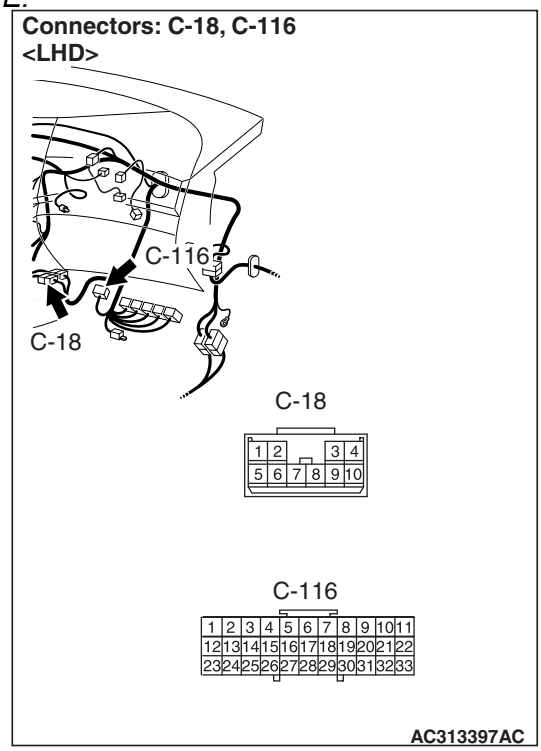

Main Index
Group TOC

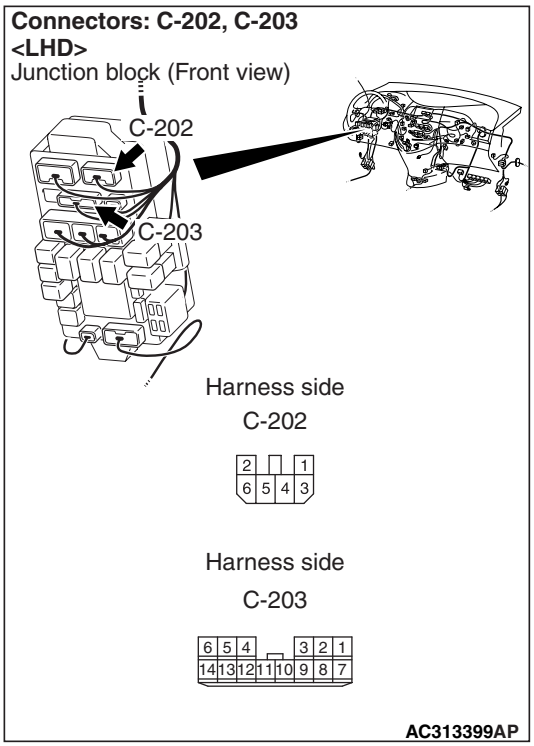

Prior to the wiring harness inspection, check joint connector C-116, intermediate connector C-18, junction block connectors C-202 and C-203, and repair if necessary.

- Check the power supply line to the ignition switch (IG1) for open circuit.

Q: Is the check result normal?

YES : . The trouble can be an intermittent malfunction (Refer to GROUP 00 – How to Cope with Intermittent Malfunction P.00-5).

NO : . Repair the wiring harness.

Step 7. Retest the system.

Check that the back-up lamp switch signal is received normally.

Q: Is the check result normal?

YES : The trouble can be an intermittent malfunction (Refer to GROUP 00 – How to Cope with Intermittent Malfunction P.00-5).

NO : Replace the ETACS-ECU.

Main Index
Group TOC

INSPECTION PROCEDURE P-4: The front fog lamp switch signal is not received.

⚠ CAUTION
Whenever the ECU is replaced, ensure that the input signal circuit is normal.

Front Fog Lamp Switch Input Circuit

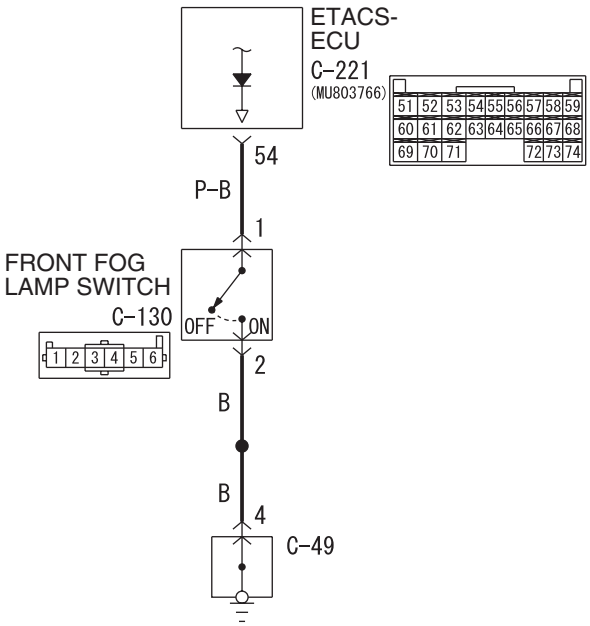

Wire colour code
B : Black LG : Light green G : Green L : Blue W : White Y : Yellow SB : Sky blue
BR : Brown O : Orange GR : Grey R : Red P : Pink V : Violet PU : Purple

W6X54X017A

COMMENTS ON TROUBLE SYMPTOM

Input signal from the front fog lamp switch is used to operate the front fog lamps. If the signal is abnormal, the front fog lamps will not illuminate and extinguish normally.

POSSIBLE CAUSES

- Malfunction of the fog lamp switch
- Malfunction of the ETACS-ECU
- Damaged harness wires and connectors

Main Index
Group TOC

DIAGNOSTIC PROCEDURE

Step 1. Connector check: C-130 fog lamp switch connector

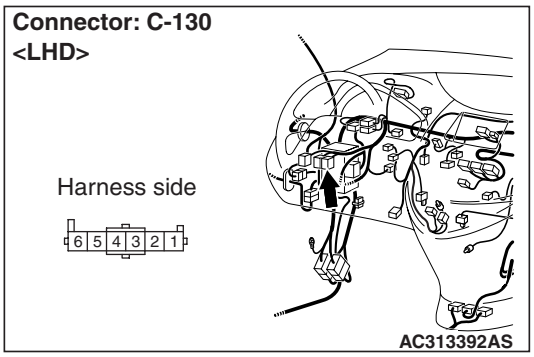

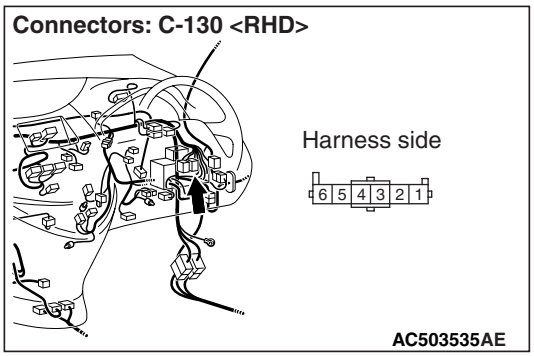

Q: Is the check result normal?
YES : Go to Step 2.
NO : Repair the defective connector.

Step 2. Check the front fog lamp switch.

Refer to GROUP 54A – Fog lamp P.54A-149.

Q: Is the check result normal?
YES : Go to Step 3.
NO : Replace the fog lamp switch.

Step 3. Resistance measurement at the C-130 fog lamp switch connector.

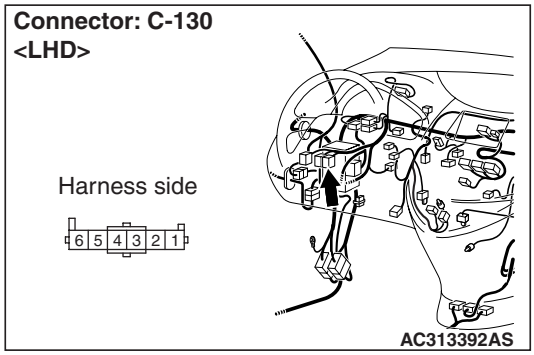

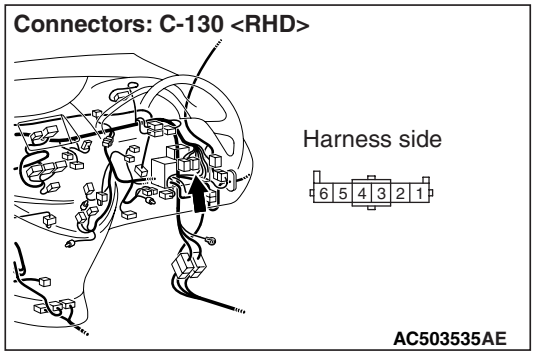

(1) Remove the fog lamp switch, and measure at the wiring harness side.

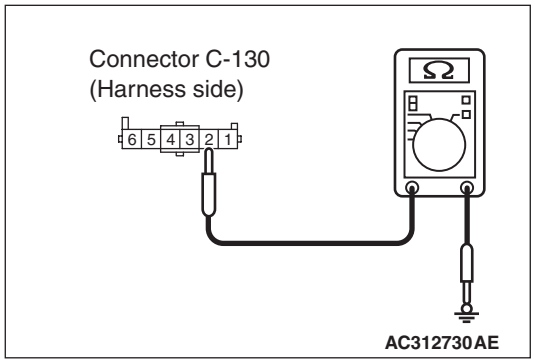

(2) Resistance between C-130 fog lamp switch connector terminal No.2 and body earth

OK: 2Ω or less

Q: Is the check result normal?
YES : Go to Step 6.
NO : Go to Step 4.

Main Index
Group TOC

Step 4. Connector check: C-49 earth connector

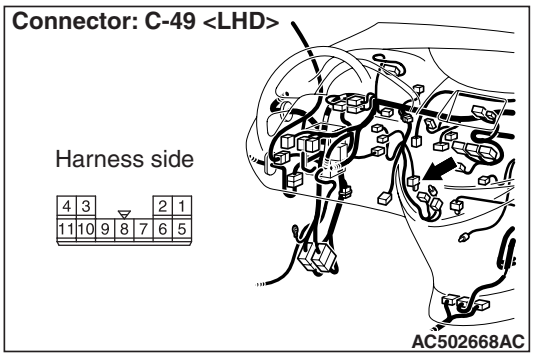

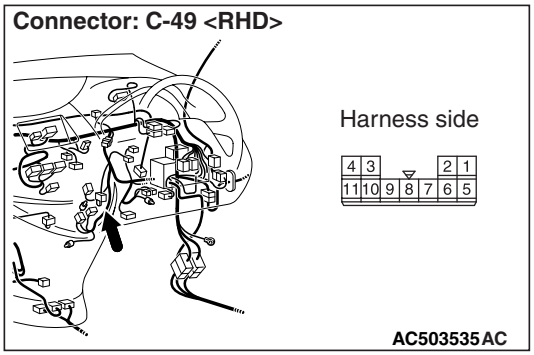

Q: Is the check result normal?
YES : Go to Step 5.
NO : Repair the connector.

Step 5. Check the wiring harness from C-130 fog lamp switch connector terminal No.2 to C-49 earth connector terminal No.4.

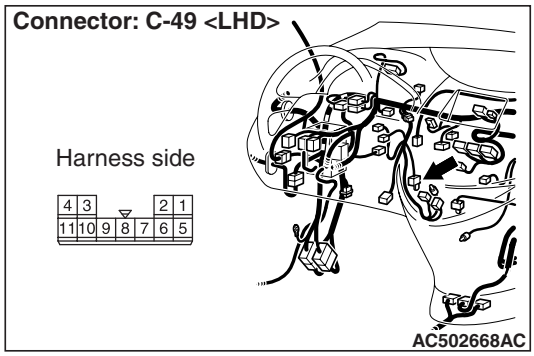

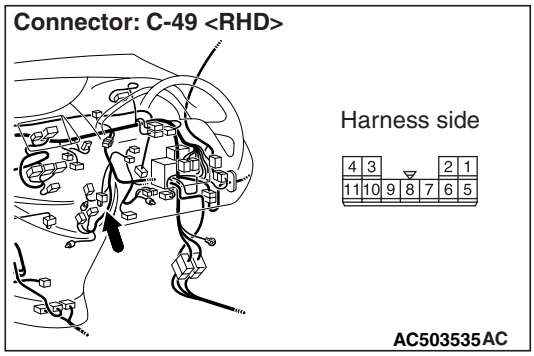

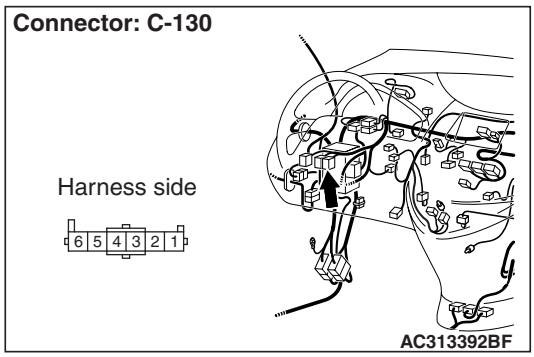

- Check the earth wires for open circuit.

Q: Is the check result normal?
YES : The trouble can be an intermittent malfunction (Refer to GROUP 00 – How to Cope with Intermittent Malfunction P.00-5).
NO : Repair the wiring harness.

Main Index
Group TOC

Step 6. Connector check: C-221 ETACS-ECU connector

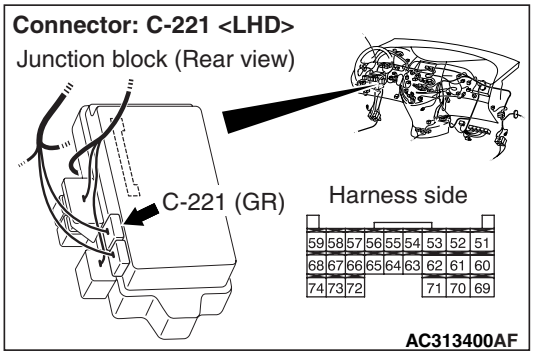

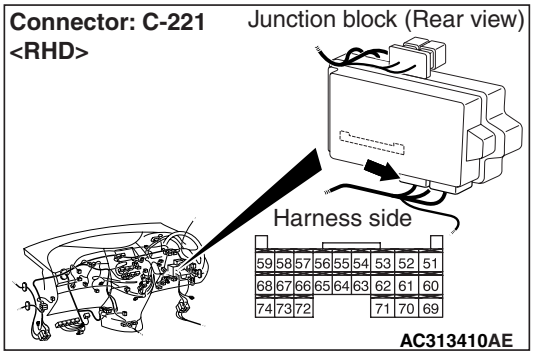

Q: Is the check result normal?
YES : Go to Step 7.
NO : Repair the defective connector.

Step 7. Check the wiring harness from C-221 ETACS-ECU connector No.54 to C-130 fog lamp switch connector terminal No.1.

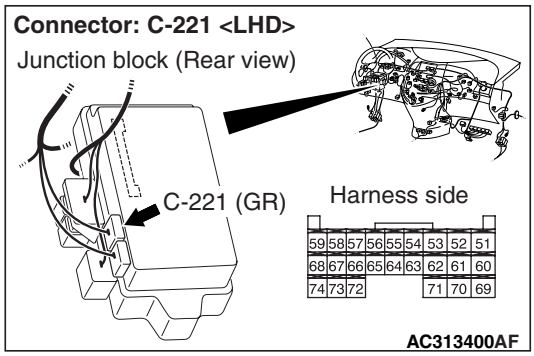

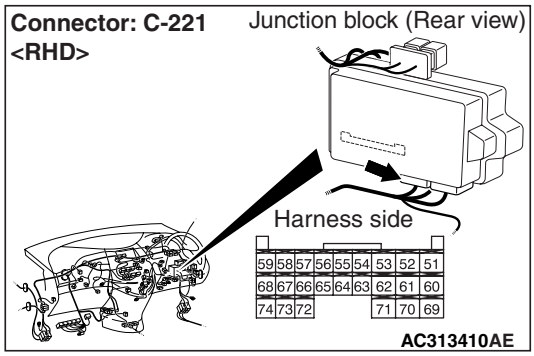

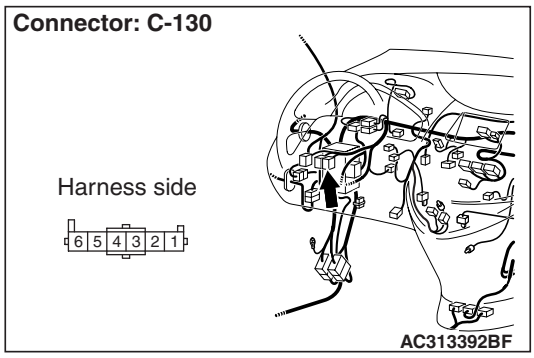

- Check the input line for open circuit.

Q: Is the check result normal?
YES : Go to Step 8.
NO : Repair the wiring harness.

Step 8. Retest the system.

Check that the front fog lamp switch signal is received normally.

Q: Is the check result normal?
YES : The trouble can be an intermittent malfunction (Refer to GROUP 00 – How to Cope with Intermittent Malfunction P.00-5).
NO : Replace the ETACS-ECU.

Main Index
Group TOC

INSPECTION PROCEDURE P-5: The driver's door switch signal is not received. <LH drive vehicles>

⚠ CAUTION
Whenever the ECU is replaced, ensure that the input signal circuit is normal.

Driver's Door Switch Input Circuit <LHD>

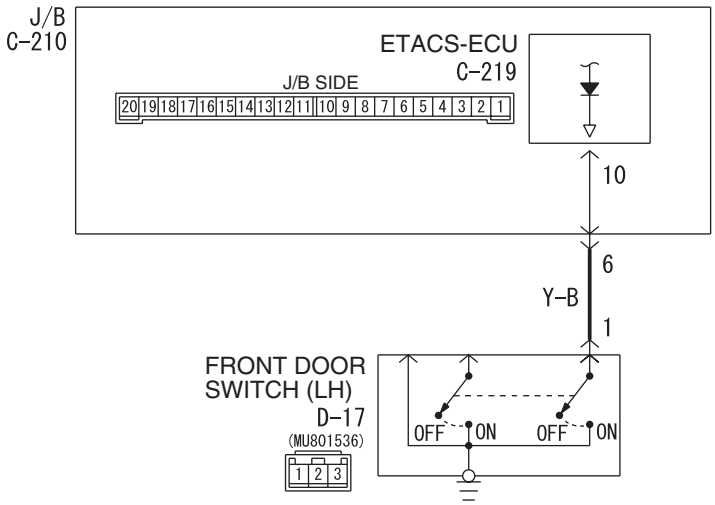

Wire colour code
B : Black LG : Light green G : Green L : Blue W : White Y : Yellow SB : Sky blue
BR : Brown O : Orange GR : Gray R : Red P : Pink V : Violet

W4X54E115A

COMMENTS ON TROUBLE SYMPTOM

Input signal from the driver's door switch is used to operate the functions below. If the signal is abnormal, these functions will not work normally.

- Lamp reminder function
- Key reminder function
- Ignition key cylinder illumination lamp
- Headlamp automatic-shutdown function
- Room lamps

POSSIBLE CAUSES

- Malfunction of the front door switch (LH)
- Malfunction of the ETACS-ECU
- Damaged harness wires and connectors

DIAGNOSTIC PROCEDURE

Step 1. Check the installation condition.

Check that the front door switch (LH) is installed on the body correctly.

Q: Is the check result normal?
YES : Go to Step 2.
NO : Correct the installation condition.

Step 2. Connector check: D-17 front door switch (LH) connector

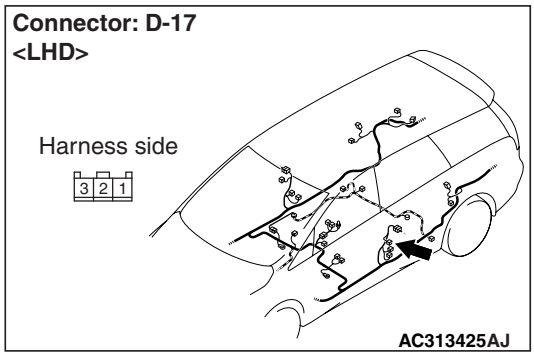

Q: Is the check result normal?
YES : Go to Step 3.
NO : Repair the defective connector.

Step 3. Check the front door switch (LH).

Refer to GROUP 42 – Door P.42-36.

Q: Is the check result normal?
YES : Go to Step 4.
NO : Replace the front door switch (LH).

Main Index
Group TOC

Step 4. Connector check: C-219 ETACS-ECU connector

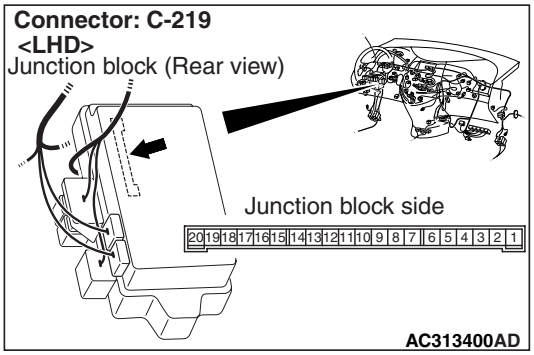

Q: Is the check result normal?
YES : Go to Step 5.
NO : Repair the defective connector.

Step 5. Check the wiring harness between D-17 front door switch (LH) connector terminal No.1 and C-219 ETACS-ECU connector terminal No.10.

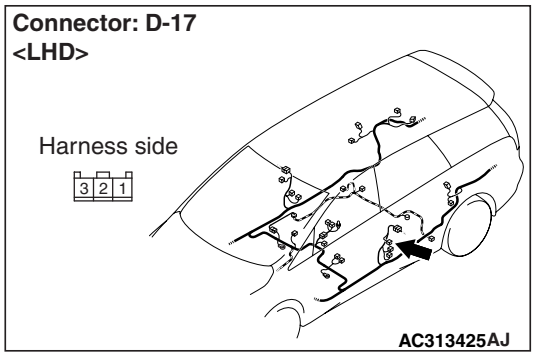

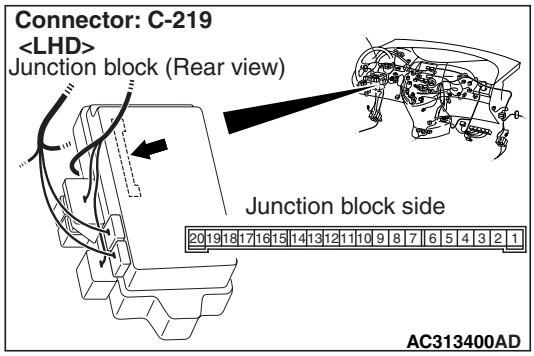

NOTE:

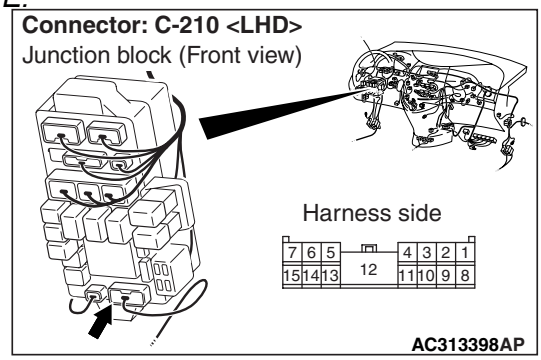

Prior to the wiring harness inspection, check joint connector C-210, and repair if necessary.

- Check the input line for open circuit.

Q: Is the check result normal?
YES : Go to Step 6.
NO : Repair the wiring harness.

Step 6. Retest the system.

Check that the driver's door switch signal is received normally.

Q: Is the check result normal?
YES : The trouble can be an intermittent malfunction (Refer to GROUP 00 – How to Cope with Intermittent Malfunction P.00-5).
NO : Replace the ETACS-ECU.

Main Index
Group TOC

INSPECTION PROCEDURE P-5: The driver's door switch signal is not received. <RH drive vehicles>

⚠ CAUTION
Whenever the ECU is replaced, ensure that the input signal circuit is normal.

Driver's Door Switch Input Circuit <RHD>

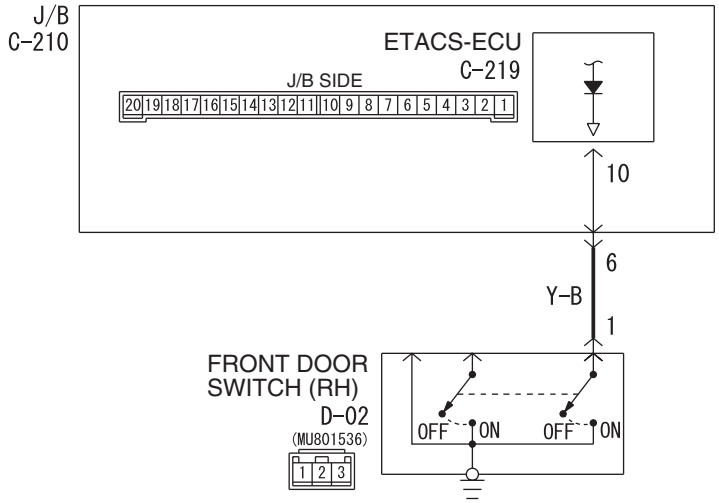

Wire colour code
B : Black LG : Light green G : Green L : Blue W : White Y : Yellow SB : Sky blue
BR : Brown O : Orange GR : Gray R : Red P : Pink V : Violet

W4X54E116A

COMMENTS ON TROUBLE SYMPTOM

Input signal from the front door switch (RH) is used to operate the functions below. If the signal is abnormal, these functions will not work normally.

- Lamp reminder function
- Headlamp automatic-shutdown function
- Room lamps

POSSIBLE CAUSES

- Malfunction of the front door switch (RH)
- Malfunction of the ETACS-ECU
- Damaged harness wires and connectors

DIAGNOSTIC PROCEDURE

Step 1. Check the installation condition.

Check that the front door switch (RH) is installed on the body correctly.

Q: Is the check result normal?
YES : Go to Step 2.
NO : Correct the installation condition.

Step 2. Connector check: D-02 front door switch (RH) connector

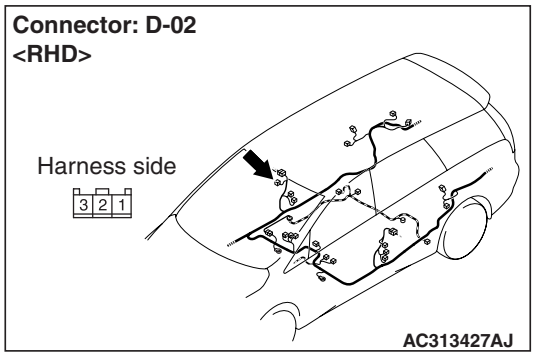

Q: Is the check result normal?
YES : Go to Step 3.
NO : Repair the defective connector.

Step 3. Check the front door switch (RH).

Refer to GROUP 42 – Door P.42-36.

Q: Is the check result normal?
YES : Go to Step 4.
NO : Replace the front door switch (RH).

Main Index
Group TOC

Step 4. Connector check: C-219 ETACS-ECU connector

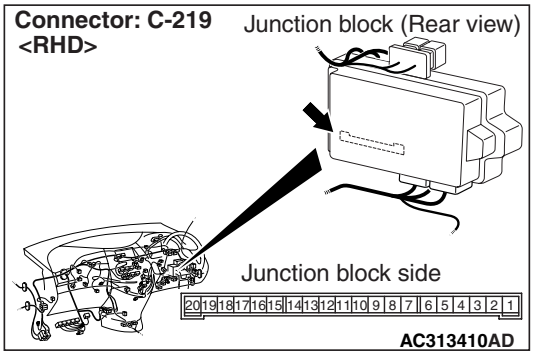

Q: Is the check result normal?
YES : Go to Step 5.
NO : Repair the defective connector.

Step 5. Check the wiring harness between D-02 front door switch (RH) connector terminal No.1 and C-219 ETACS-ECU connector terminal No.10.

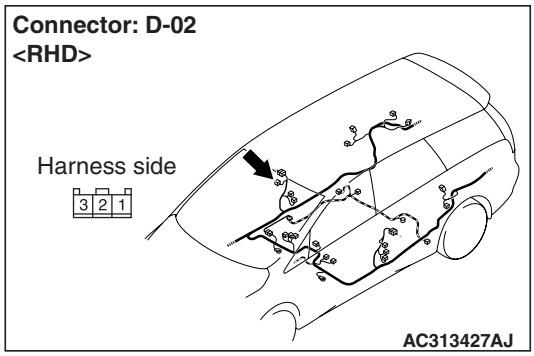

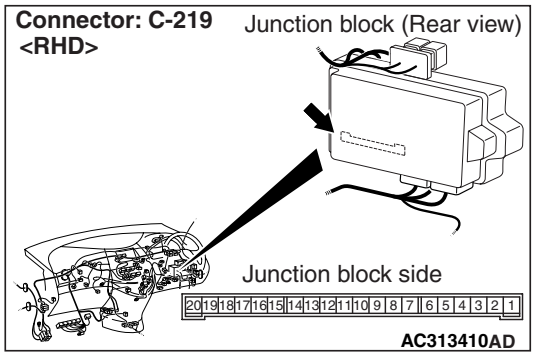

NOTE:

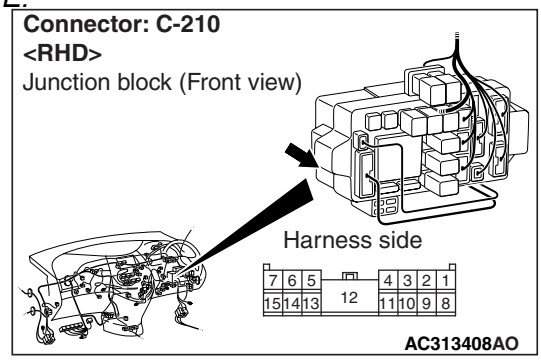

Prior to the wiring harness inspection, check joint connector C-210, and repair if necessary.

- Check the input line for open circuit.

Q: Is the check result normal?
YES : Go to Step 6.
NO : Repair the wiring harness.

Step 6. Retest the system.

Check that the front door switch (RH) signal is received normally.

Q: Is the check result normal?
YES : The trouble can be an intermittent malfunction (Refer to GROUP 00 – How to Cope with Intermittent Malfunction P.00-5).
NO : Replace the ETACS-ECU.

Main Index
Group TOC

INSPECTION PROCEDURE P-6: The column switch (lighting, turn-signal lamp switch) signal is not received.

⚠ CAUTION
Whenever the ECU is replaced, ensure that the input signal circuit is normal.

Lighting Switch Input Circuit <LHD>

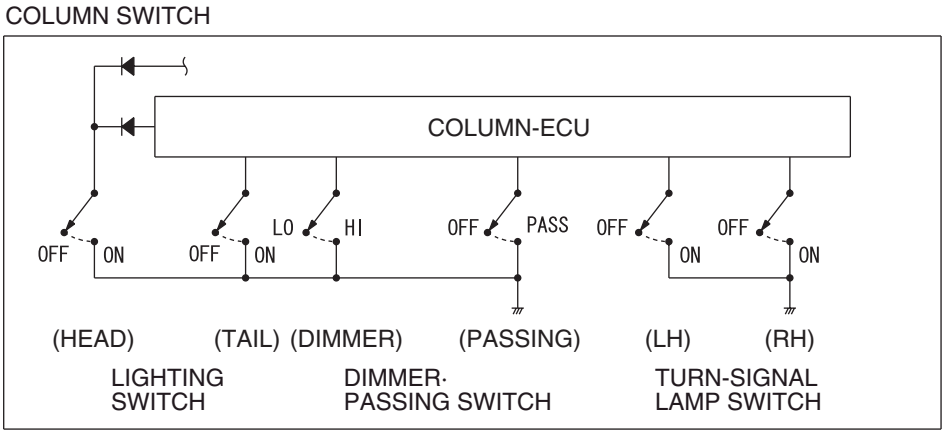

W4X54X103A

Lighting Switch Input Circuit <RHD>

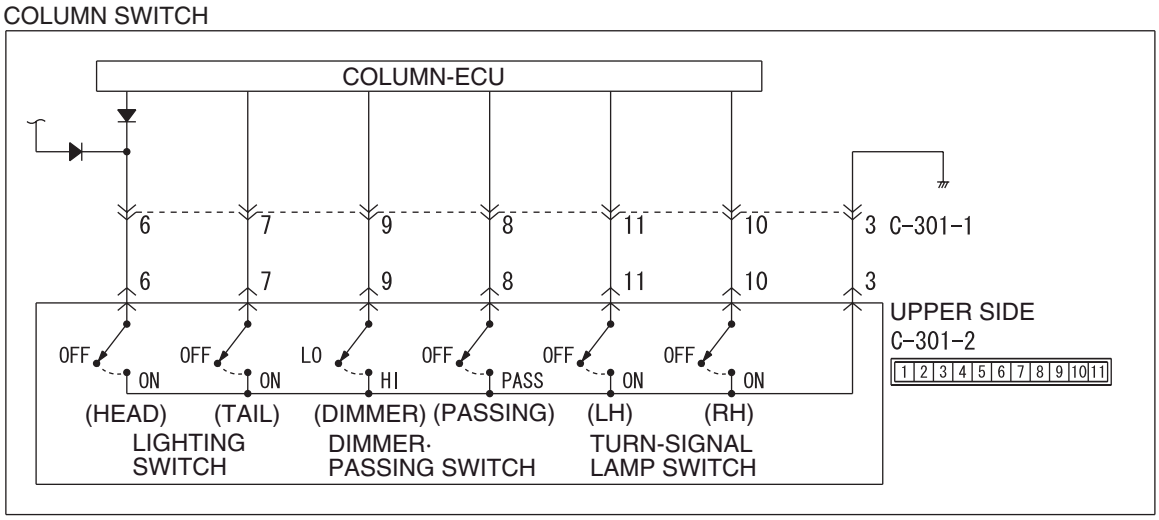

W4X54X108A

COMMENTS ON TROUBLE SYMPTOM

Input signal from the column switch (lighting, turn-signal lamp switch) is used to operate the functions below. If the signal is abnormal, these functions will not work normally.

- Lamp reminder function
- Headlamp and tail lamp
- Fog lamp
- Turn signal lamp

POSSIBLE CAUSES

- Malfunction of the column switch
- Damaged harness wires and connectors

Main Index
Group TOC

DIAGNOSTIC PROCEDURE

Step 1. Check the vehicle model for which no column switch (lighting, turn-signal lamp switch) signal is received.

Q: Which vehicle model does not input any column switch (lighting, turn-signal lamp switch) signal, LHD or RHD?
<LH drive vehicles> : Go to Step 2.
<RH drive vehicles> : Go to Step 6.

Step 2. Check the column switch connector.
Check that the wiper and washer switch connector, the lighting switch connector and the switch body connector are in good condition.

Q: Is the check result normal?
YES : Go to Step 3.
NO : Repair the defective connector.

Step 3. Check the column switch (lighting switch and switch body).
Refer to GROUP 54A – Column switch P.54A-212.

Q: Is the check result normal?
YES : Go to Step 4.
NO : Replace the column switch.

Step 4. M.U.T.-III diagnosis code
Check that the ETACS-ECU sets a diagnosis code.

Q: Is the diagnosis code set?
YES : Refer to diagnosis code chart P.54B-26.
NO : Go to Step 5.

Step 5. Retest the system.
Replace the column switch, and check if the column switch (lighting and turn-signal lamp switch) sends signal.
(1) Replace the column switch.
(2) Check if the column switch (lighting and turn-signal switch) sends signal.

Q: Is the check result normal?
YES : The procedure is complete.
NO : Replace the ETACS-ECU.

Step 6. Use the M.U.T.-III to confirm a diagnosis code.
Check that the ETACS-ECU sets a diagnosis code.

Q: Is the diagnosis code set?
YES : Refer to diagnosis code chart P.54B-26.
NO : Go to Step 7.

Step 7. Retest the system.
Replace the column switch, and check if the column switch (lighting and turn-signal lamp switch) sends signal.
(1) Replace the column switch.
(2) Check if the column switch (lighting and turn-signal lamp switch) sends signal.

Q: Is the check result normal?
YES : The procedure is complete.
NO : Replace the ETACS-ECU.

Main Index
Group TOC

INSPECTION PROCEDURE P-7: The column switch (windshield wiper washer and rear wiper washer switch) signal is not received.

⚠ CAUTION
Whenever the ECU is replaced, ensure that the input signal circuit is normal.

Windshield Wiper and Washer Switch Input Circuit <LHD>

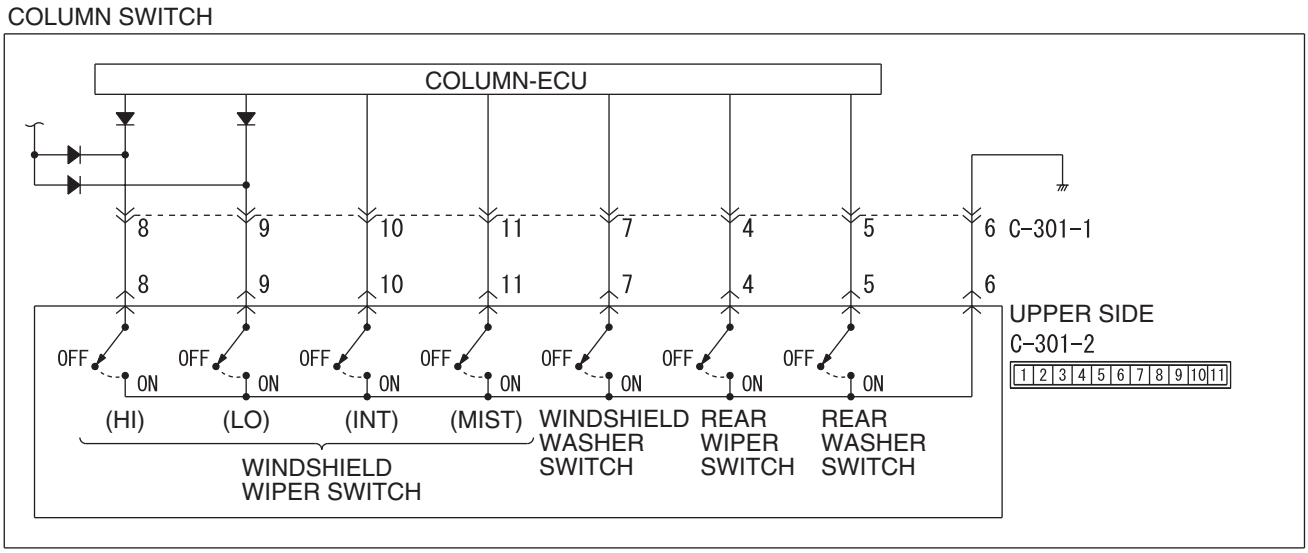

W4X54X105A

Windshield Wiper and Washer Switch Input Circuit <RHD>

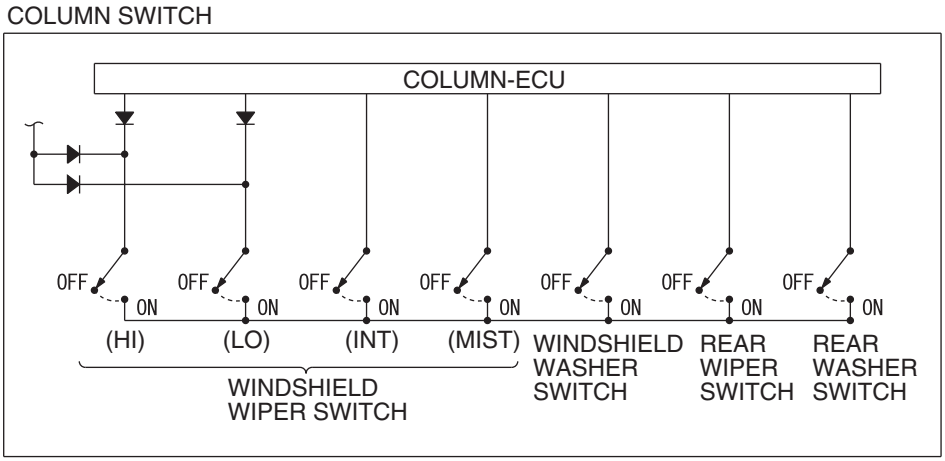

W4X54X106A

COMMENTS ON TROUBLE SYMPTOM

Input signal from the column switch (wiper switch) is used to operate the functions below. If the signal is abnormal, these functions will not work normally.

- Windshield wiper and washer
- Rear wiper and washer

POSSIBLE CAUSES

- Malfunction of the column switch
- Damaged harness wires and connectors

Main Index
Group TOC

DIAGNOSTIC PROCEDURE

Step 1. Check the vehicle model for which no column switch (windshield wiper washer and rear wiper washer switch) signal is received.

Q: Which vehicle model does not send any column switch (windshield wiper washer and rear wiper washer switch) signal, LHD or RHD?
<LH drive vehicles> : Go to Step 2.
<RH drive vehicles> : Go to Step 4.

Step 2. Use the M.U.T.-III to confirm a diagnosis code.
Check that the ETACS-ECU sets a diagnosis code.

Q: Is the diagnosis code set?
YES : Refer to diagnosis code chart P.54B-26.
NO : Go to Step 3.

Step 3. Retest the system.
Replace the column switch, and check if the column switch (windshield wiper washer and rear wiper washer switch) sends signal.
(1) Replace the column switch.
(2) Check if the column switch (windshield wiper/washer and rear wiper washer switch) sends signal.

Q: Is the check result normal?
YES : The procedure is complete.
NO : Replace the ETACS-ECU.

Step 4. Check the column switch connector.
Check that the wiper and washer switch connector, the lighting switch connector and the switch body connector are in good condition.

Q: Is the check result normal?
YES : Go to Step 5.
NO : Repair the defective connector.

Step 5. Check the column switch (wiper switch and switch body).
Refer to GROUP 54A – Column switch P.54A-212.

Q: Is the check result normal?
YES : Go to Step 6.
NO : Replace the column switch.

Step 6. M.U.T.-III diagnosis code
Check that the ETACS-ECU sets a diagnosis code.

Q: Is the diagnosis code set?
YES : Refer to diagnosis code chart P.54B-26.
NO : Go to Step 7.

Step 7. Retest the system.
Replace the column switch, and check if the column switch (windshield wiper/washer and rear wiper washer switch) sends signal.
(1) Replace the column switch.
(2) Check if the column switch (windshield wiper/washer and rear wiper washer switch) sends signal.

Q: Is the check result normal?
YES : The procedure is complete.
NO : Replace the ETACS-ECU.

Main Index
Group TOC

INSPECTION PROCEDURE P-8: The windshield intermittent wiper volume signal is not received.

⚠ CAUTION

Whenever the ECU is replaced, ensure that the input signal circuit is normal.

Windshield Intermittent Wiper Interval Adjusting Knob Input Circuit <LHD>

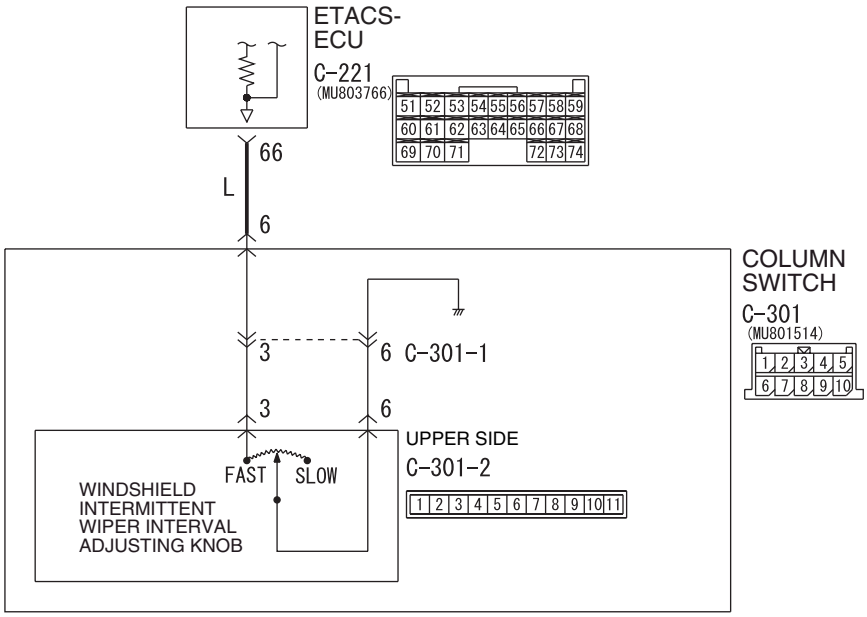

Wire colour code
B : Black LG : Light green G : Green L : Blue W : White Y : Yellow SB : Sky blue
BR : Brown O : Orange GR : Gray R : Red P : Pink V : Violet

W4X54X126A

Windshield Intermittent Wiper Interval Adjusting Knob Input Circuit <RHD>

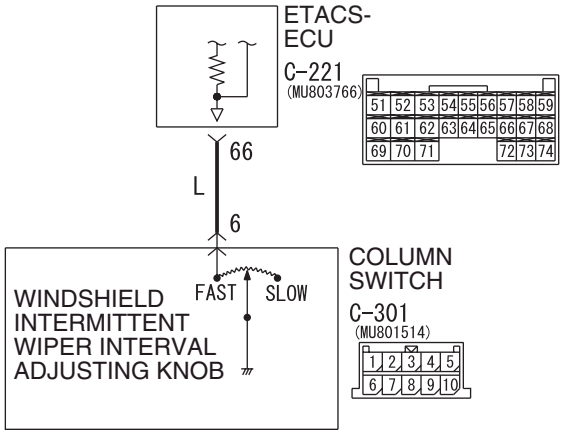

Wire colour code
B : Black LG : Light green G : Green L : Blue W : White Y : Yellow SB : Sky blue
BR : Brown O : Orange GR : Gray R : Red P : Pink V : Violet

W4X54X127A

Main Index
Group TOC

COMMENTS ON TROUBLE SYMPTOM

The intermittent wiper interval is calculated in accordance with the input signal from the windshield intermittent wiper volume. If this signal is abnormal, the wiper interval can not be adjusted.

POSSIBLE CAUSES

- Malfunction of the column switch
- Malfunction of the ETACS-ECU
- Damaged harness wires and connectors

DIAGNOSTIC PROCEDURE

Step 1. Connector check: C-301 column switch connector

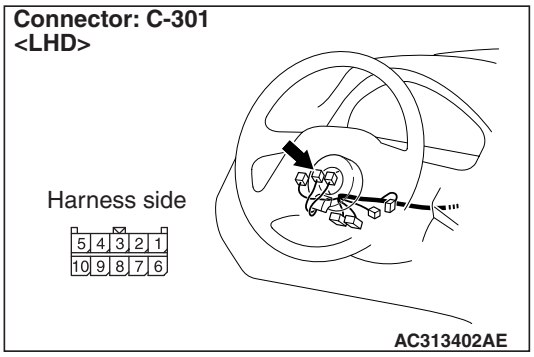

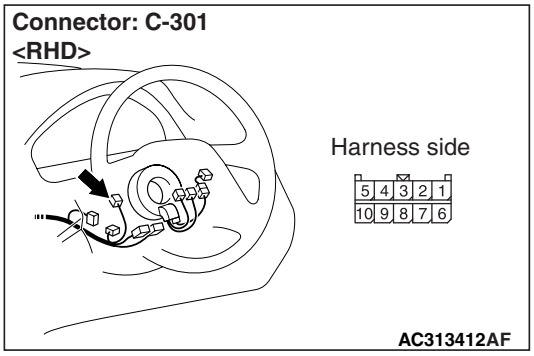

Q: Is the check result normal?
YES : Go to Step 2.
NO : Repair the defective connector.

Step 2. Resistance measurement at the C-301 column switch connector.

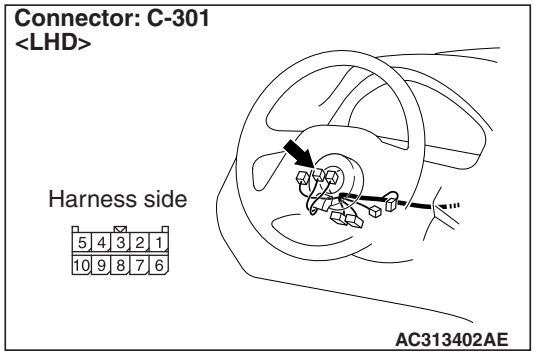

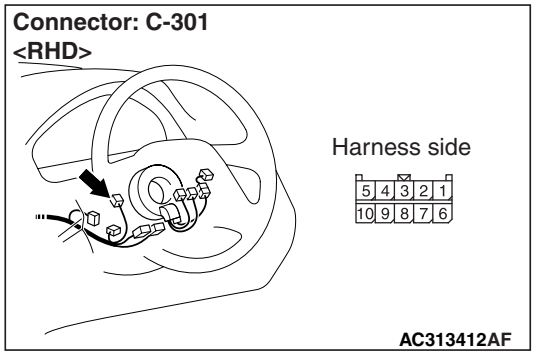

(1) Disconnect the connector, and measure at the column switch side.

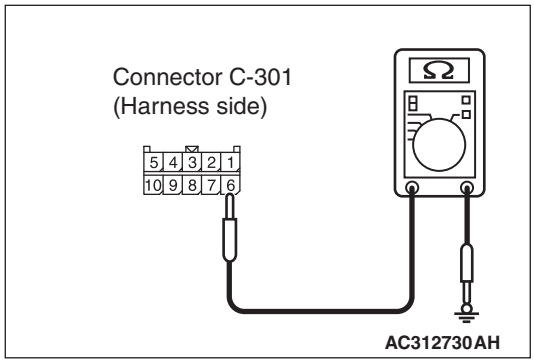

(2) Resistance between C-301 column switch connector terminal No.6 and body earth

OK: The resistance should rise from 0 to 1 kΩ when the windshield intermittent wiper volume is rotated from "Fast" to "Slow".

Q: Is the check result normal?
YES : Go to Step 3.
NO : Replace the column switch.

Step 3. Connector check: C-221 ETACS-ECU connector

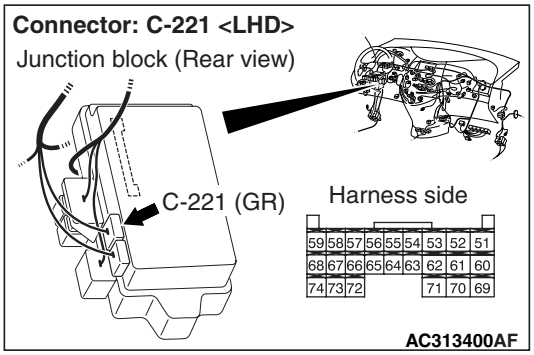

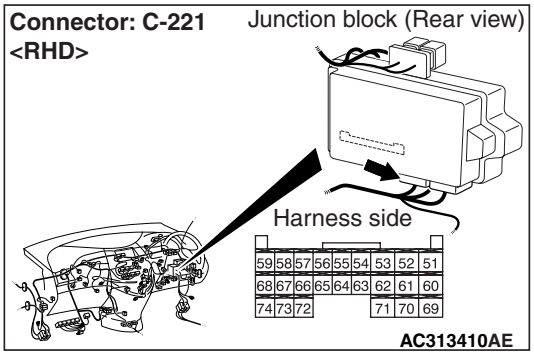

Q: Is the check result normal?
YES : Go to Step 4.
NO : Repair the defective connector.

Step 4. Check the wiring harness between C-301 column switch connector terminal No.6 and C-221 ETACS-ECU connector terminal No.66.

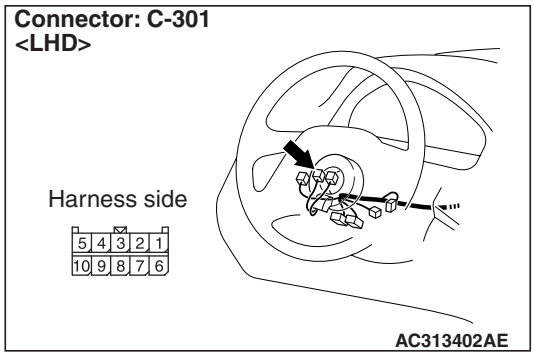

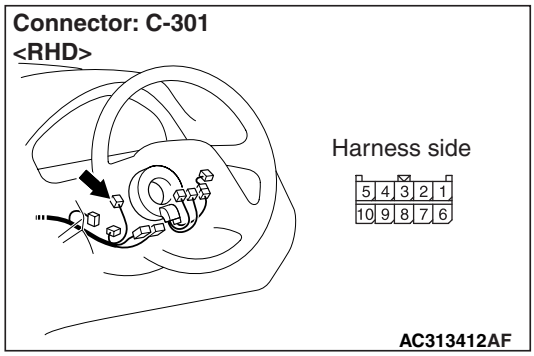

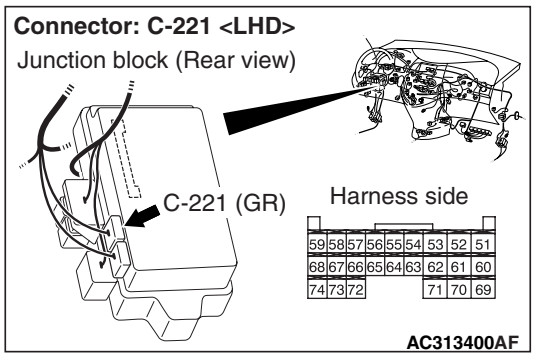

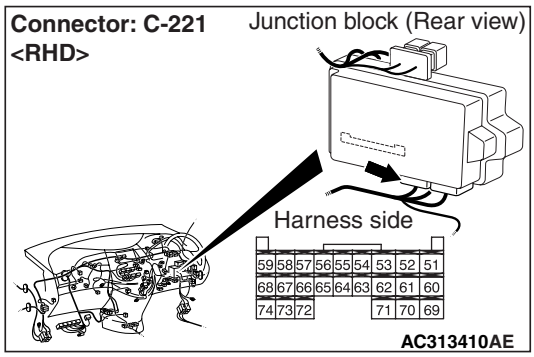

- Check the input line for open circuit.

Q: Is the check result normal?
YES : Go to Step 5.
NO : Repair the wiring harness.

Main Index
Group TOC

Step 5. Retest the system.
Check that the windshield intermittent wiper volume is sending a correct signal.

Q: Is the check result normal?
YES : . The trouble can be an intermittent malfunction (Refer to GROUP 00 – How to Cope with Intermittent Malfunction P.00-5).
NO : . Replace the ETACS-ECU.

INSPECTION PROCEDURE P-9: When the sunroof switch is operated, the switch signals are not received.

⚠ CAUTION
Whenever the ECU is replaced, ensure that the input signal circuit is normal.

Sunroof Switch Input Circuit <LHD>

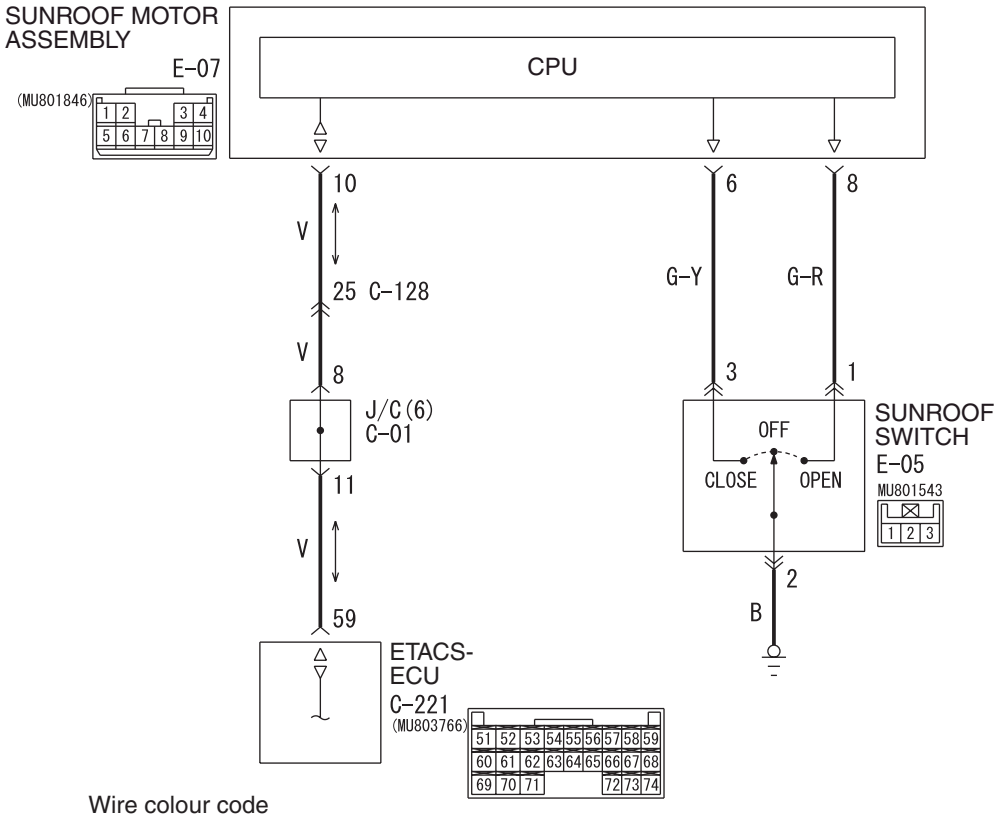

Wire colour code
B : Black LG : Light green G : Green L : Blue W : White Y : Yellow SB : Sky blue
BR : Brown O : Orange GR : Gray R : Red P : Pink V : Violet

W4X54E126A

Main Index
Group TOC

Sunroof Switch Input Circuit

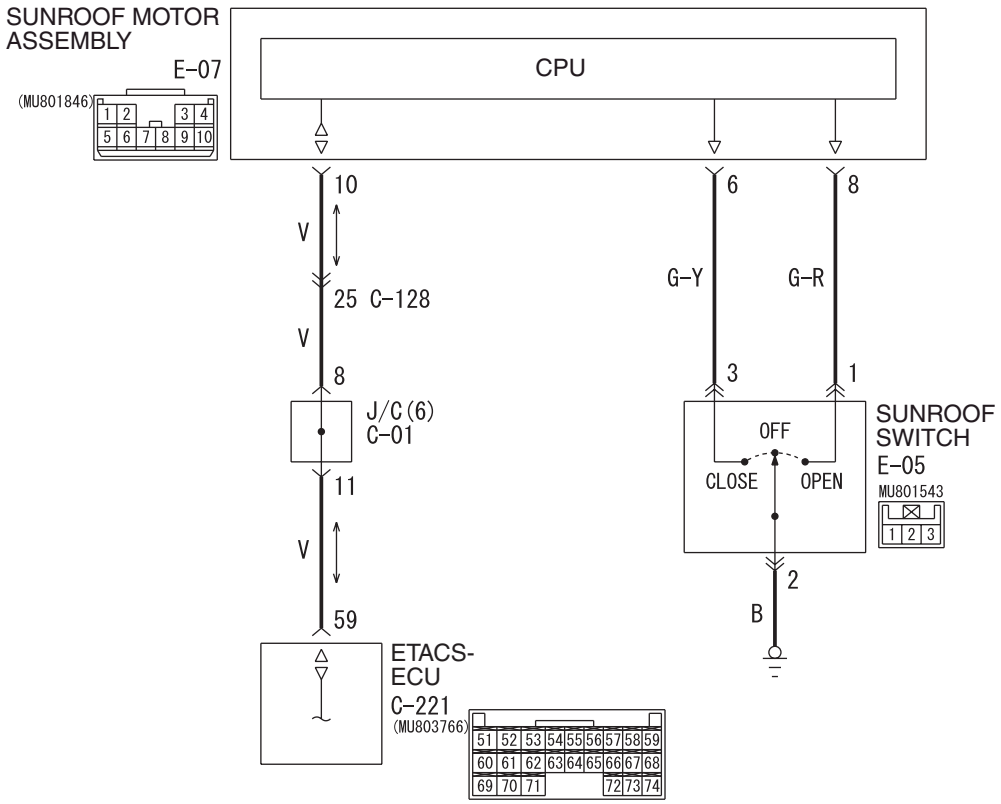

Wire colour code
B : Black LG : Light green G : Green L : Blue W : White Y : Yellow SB : Sky blue
BR : Brown O : Orange GR : Grey R : Red P : Pink V : Violet PU : Purple

W6X54X021A

COMMENTS ON TROUBLE SYMPTOM

If the input signal from the sunroof switch is abnormal, the sunroof input check response signal will not be sent to the SWS communication line.

POSSIBLE CAUSES

- Malfunction of the sunroof assembly
- Malfunction of the sunroof switch
- Damaged harness wires and connectors

DIAGNOSTIC PROCEDURE

Step 1. Check the operation condition of the sunroof.

Check that the sunroof works normally.

Q: Is the check result normal?

YES : Go to Step 2.

NO : Refer to Inspection Procedure F-1 "Sunroof does not work at all P.54B-154."

Main Index
Group TOC

Step 2. Connector check: E-05 sunroof switch connector

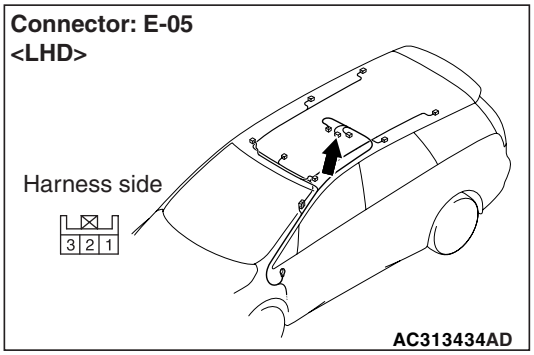

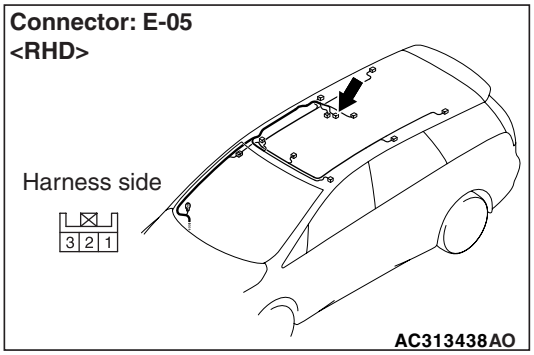

Q: Is the check result normal?
YES : Go to Step 3.
NO : Repair the connector.

Step 3. Check the sunroof switch.

Refer to GROUP 42 – Sunroof P.42-78.

Q: Is the check result normal?
YES : Go to Step 4.
NO : Replace the sunroof switch.

Step 4. Resistance measurement at the E-05sunroof switch connector.

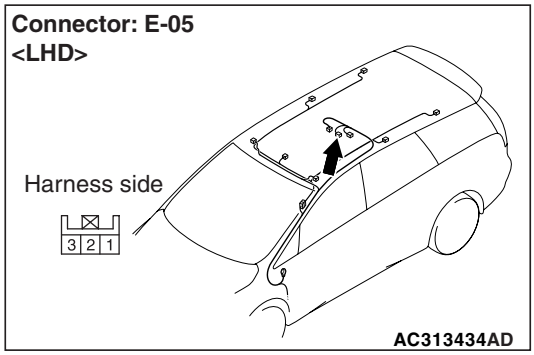

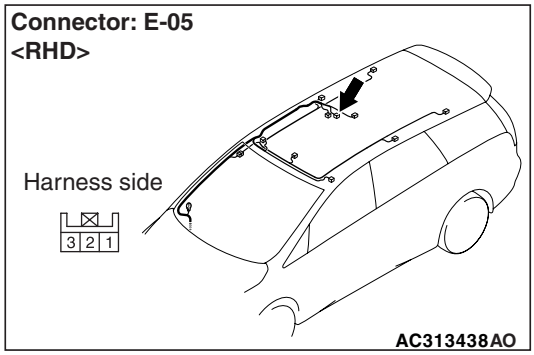

(1) Disconnect the connector, and measure at the wiring harness side.

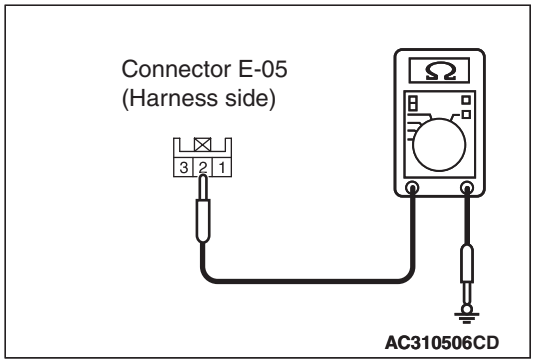

(2) Continuity between E-05 sunroof switch connector terminal No.2 and body earth

OK: 2Ω or less

Q: Is the check result normal?
YES : Go to Step 6.
NO : Go to Step 5.

Main Index
Group TOC

Step 5. Check the wiring harness between E-05 sunroof motor switch connector terminal No.2 and body earth.

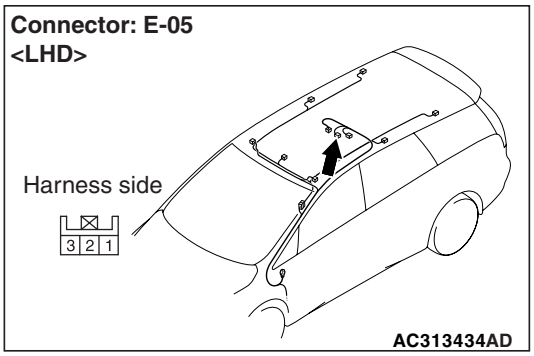

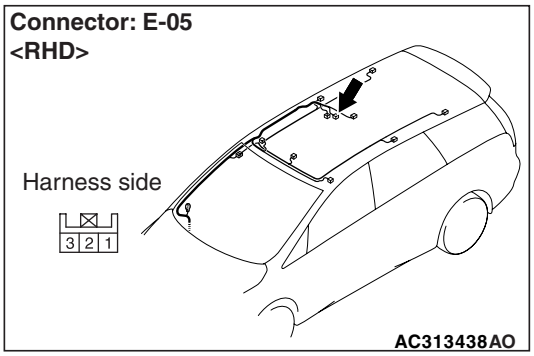

- Check the earth wires for open circuit.

Q: Is the check result normal?

YES : The trouble can be an intermittent malfunction (Refer to GROUP 00 – How to Cope with Intermittent Malfunction P.00-5).

NO : Repair the wiring harness.

Step 6. Connector check: E-07 sunroof motor assembly connector

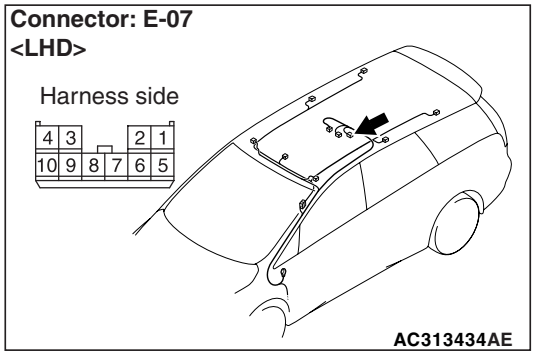

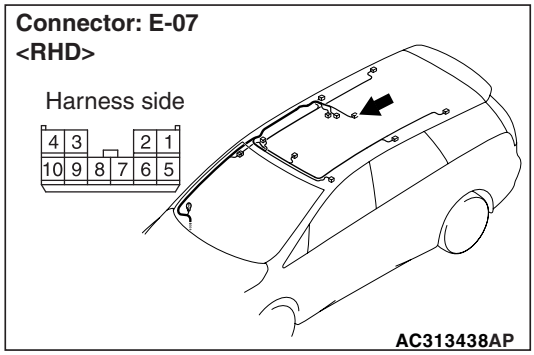

Q: Is the check result normal?

YES : Go to Step 7.

NO : Repair the connector.

Main Index
Group TOC

Step 7. Check the wiring harness from E-07 sunroof motor assembly connector (terminal Nos. 6 and 8) to E-05 sunroof switch connector (terminal Nos. 3 and 1).

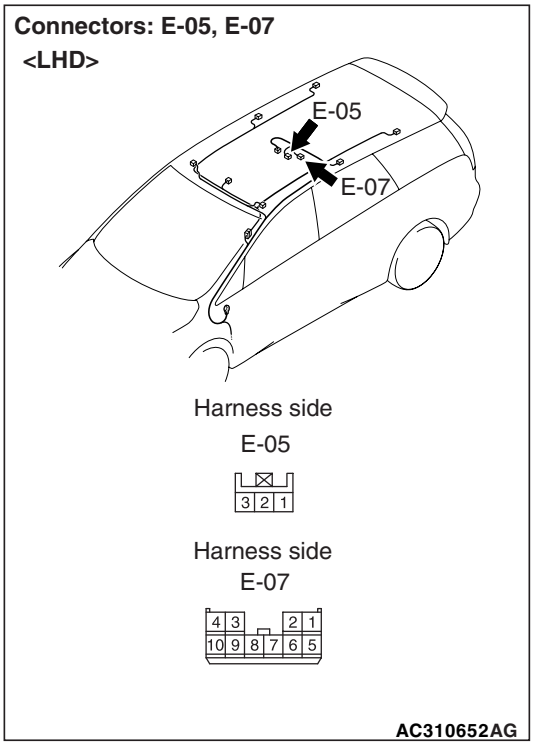

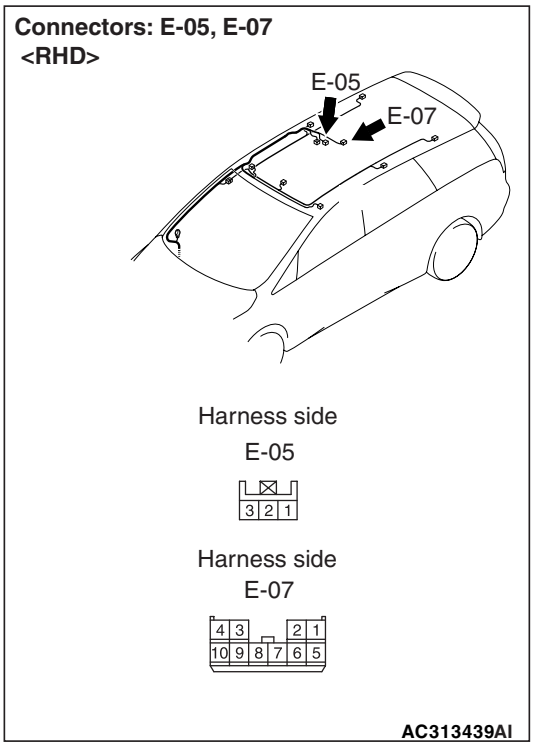

- Check the input line for open circuit.

Q: Is the check result normal?
YES : Go to Step 8.
NO : Repair the wiring harness.

Step 8. Connector check: C-221 ETACS-ECU connector

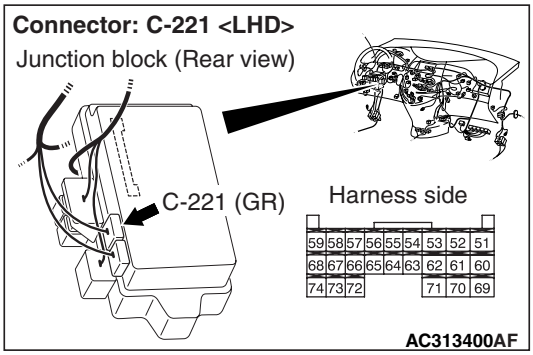

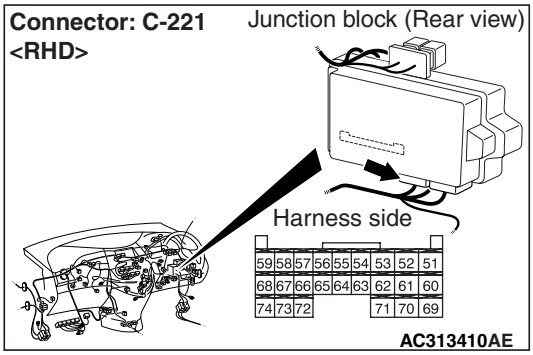

Q: Is the check result normal?
YES : Go to Step 9.
NO : Repair the connector.

Main Index
Group TOC

Step 9. Check the wiring harness between E-07 sunroof motor assembly connector terminal No.10 and C-221 ETACS-ECU connector terminal No.59.

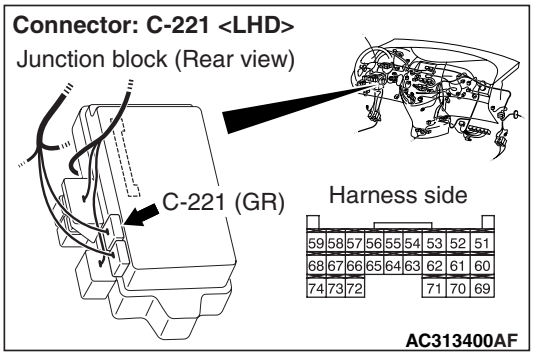

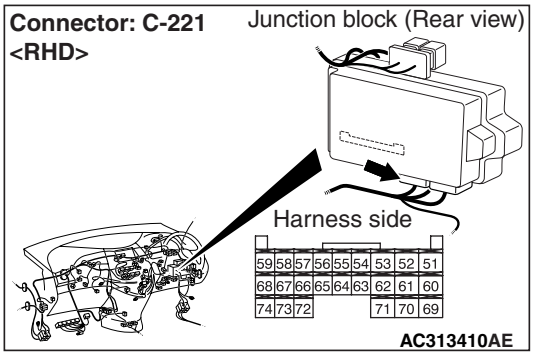

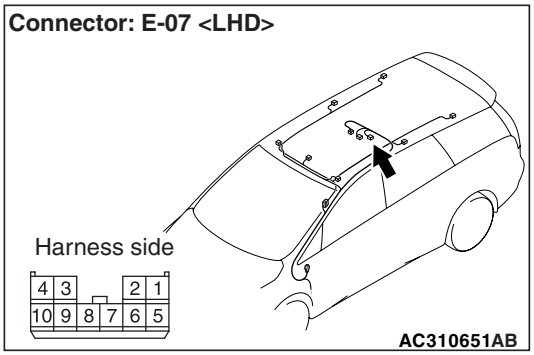

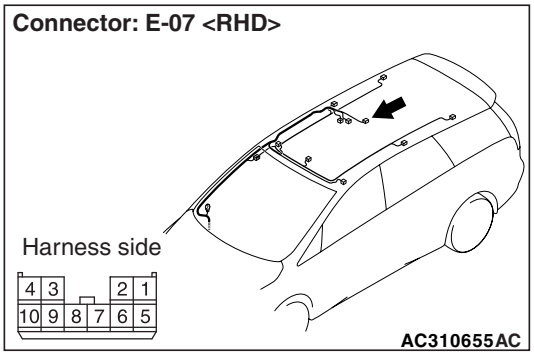

NOTE:

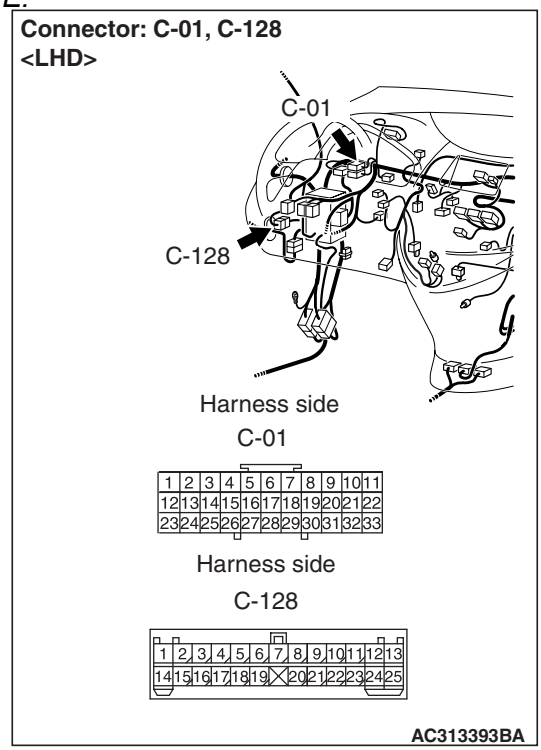

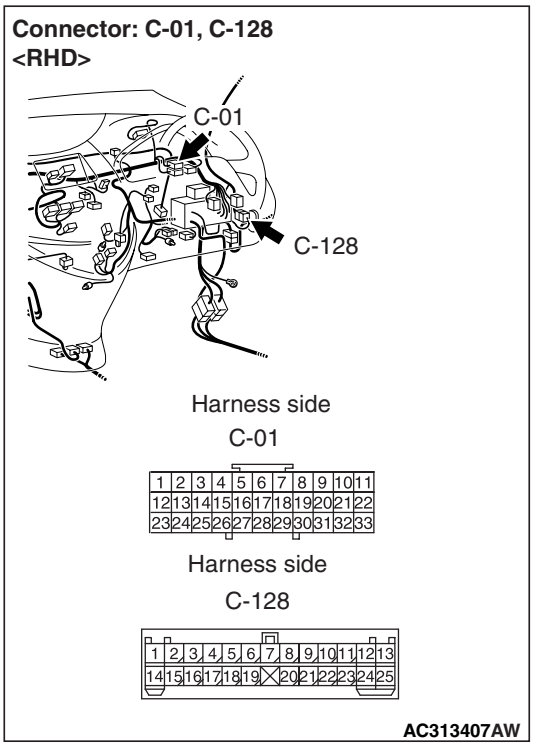

Prior to the wiring harness inspection, check joint connector C-01 and intermediate connector C-128, and repair if necessary.

- Check the communication lines for open circuit.

Q: Is the check result normal?

YES : Go to Step 10.

NO : Repair the wiring harness.

Main Index
Group TOC

Step 10. Retest the system.
Check that each switch signal is received by operating the sunroof switch.

Q: Is the check result normal?
YES : . The trouble can be an intermittent malfunction (Refer to GROUP 00 – How to Cope with Intermittent Malfunction P.00-5).
NO : . Replace the sunroof motor assembly.

INSPECTION PROCEDURE P-10: The key reminder switch signal is not received.

⚠ CAUTION
Whenever the ECU is replaced, ensure that the input signal circuit is normal.

Key Reminder Switch Input Circuit

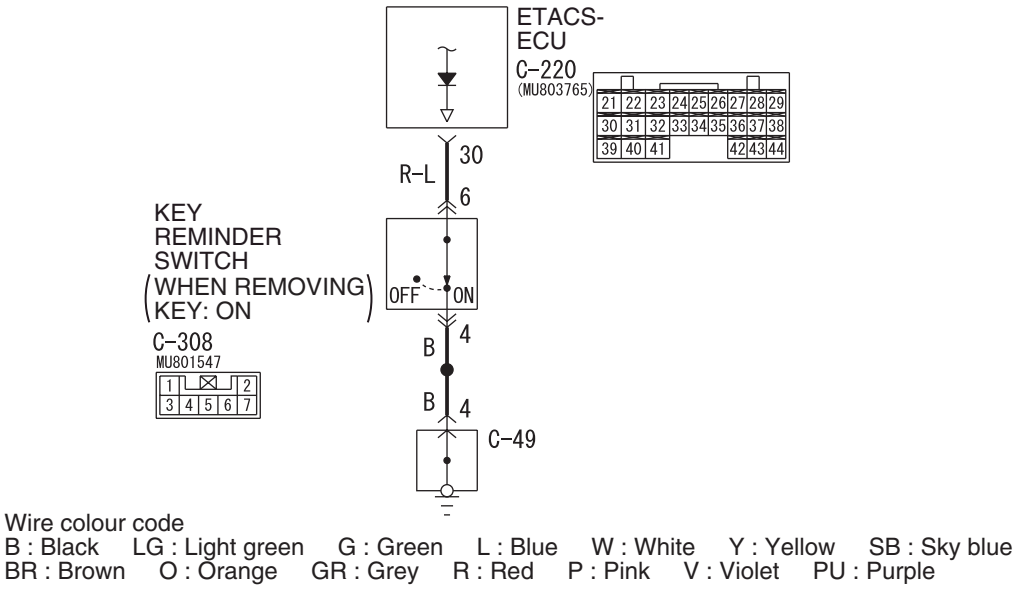

W6X54X022A

COMMENTS ON TROUBLE SYMPTOM

Input signal from the key reminder switch is used to operate the functions below. If the signal is abnormal, these functions will not work normally.

- Key reminder function
- Keyless entry system
- Ignition key cylinder illumination lamp
- Interior lamps

POSSIBLE CAUSES

- Malfunction of the key reminder switch
- Malfunction of the ETACS-ECU
- Damaged harness wires and connectors

Main Index
Group TOC

DIAGNOSTIC PROCEDURE

Step 1. Connector check: C-308 key reminder switch connector

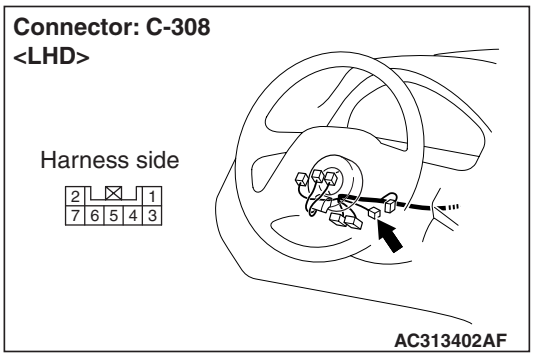

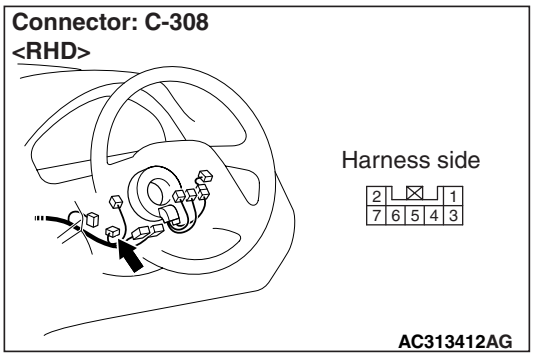

Q: Is the check result normal?
YES : Go to Step 2.
NO : Repair the defective connector.

Step 2. Check the key reminder switch.

Refer to GROUP 54A – Ignition switch P.54A-49.

Q: Is the check result normal?
YES : Go to Step 3.
NO : Replace the key reminder switch.

Step 3. Resistance measurement at the C-308 key reminder switch connector.

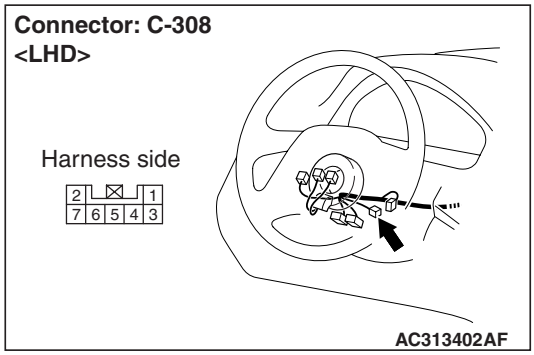

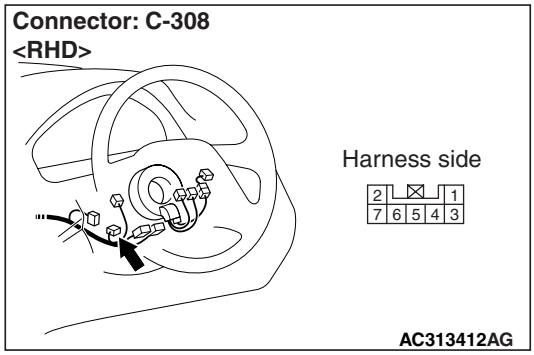

(1) Disconnect the connector, and measure at the wiring harness side.

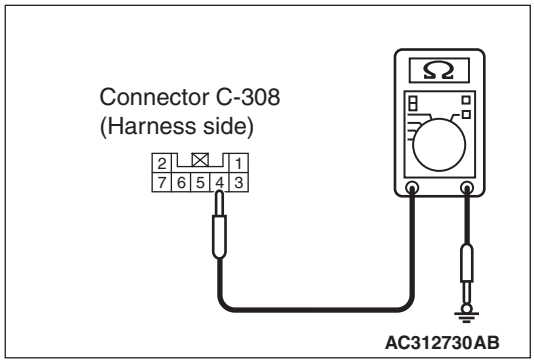

(2) Resistance between C-308 key reminder switch connector terminal No.4 and body earth

OK: 2 Ω or less

Q: Is the check result normal?
YES : Go to Step 6.
NO : Go to Step 4.

Main Index
Group TOC

Step 4. Connector check: C-49 earth connector

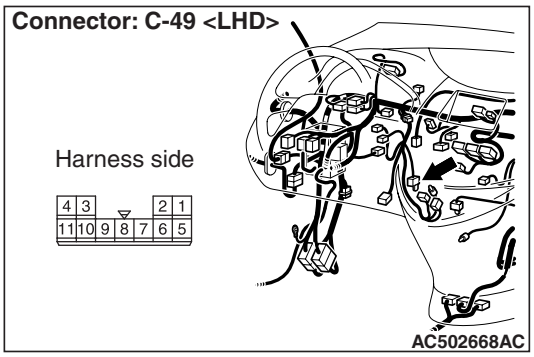

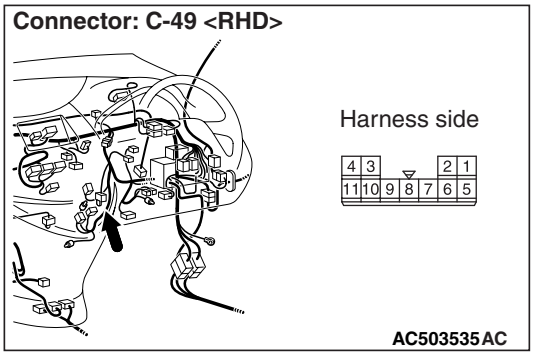

Q: Is the check result normal?
YES : Go to Step 5.
NO : Repair the connector.

Step 5. Check the wiring harness between C-308 key reminder switch connector terminal No.4 and the C-49 earth connector terminal No.4.

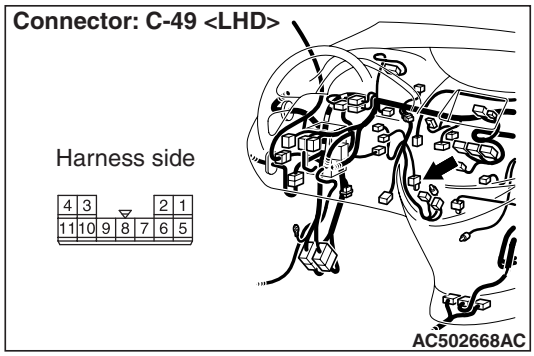

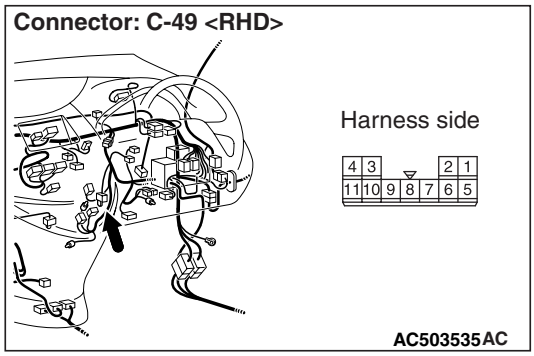

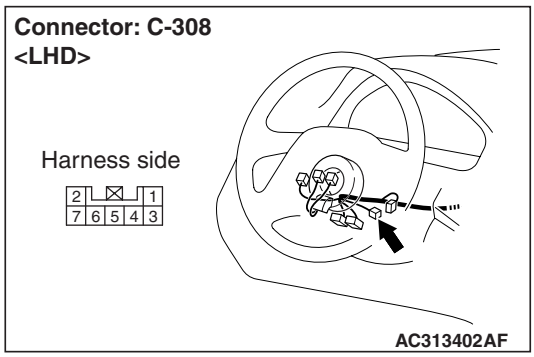

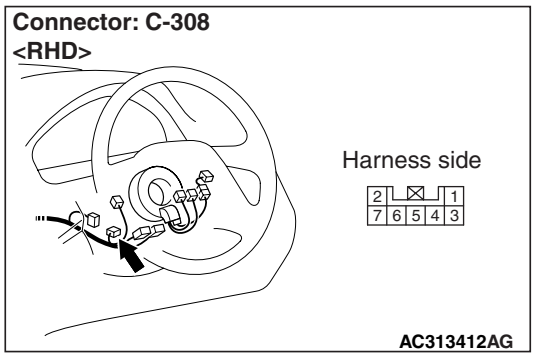

- Check the earth wires for open circuit.

Q: Is the check result normal?
YES : The trouble can be an intermittent malfunction (Refer to GROUP 00 – How to Cope with Intermittent Malfunction P.00-5).
NO : Repair the wiring harness.

Step 6. Connector check: C-220 ETACS-ECU connector

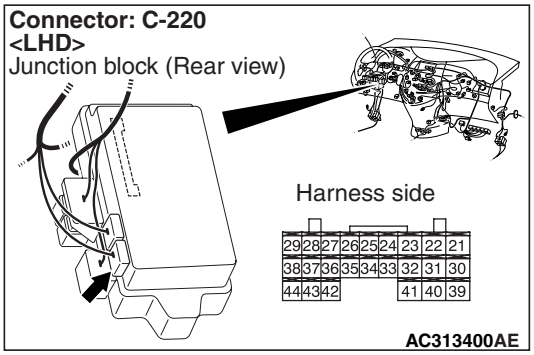

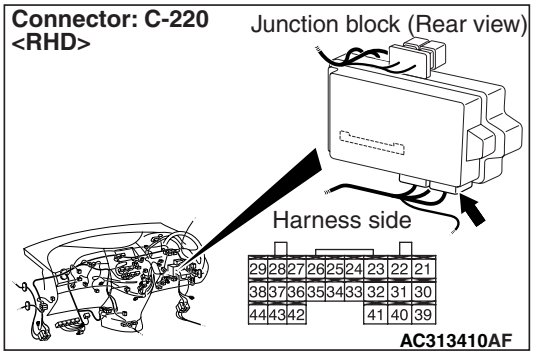

Q: Is the check result normal?
YES : Go to Step 7.
NO : Repair the defective connector.

Step 7. Check the wiring harness between C-308 key reminder switch connector terminal No.6 and C-220 ETACS-ECU connector terminal No.30.

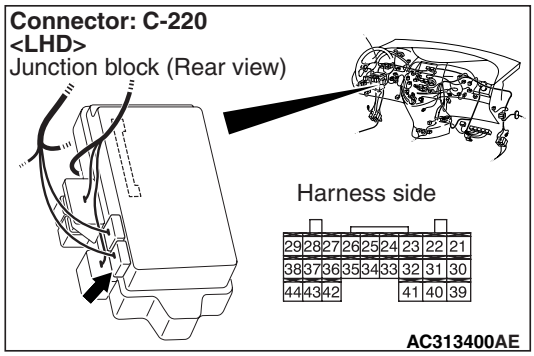

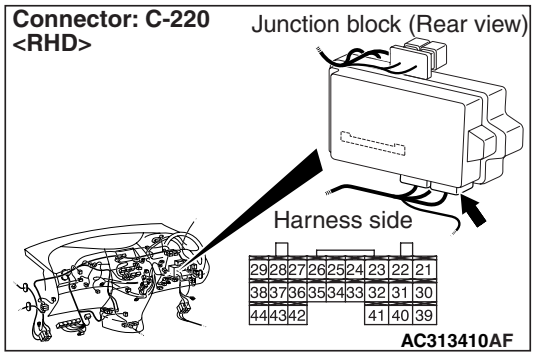

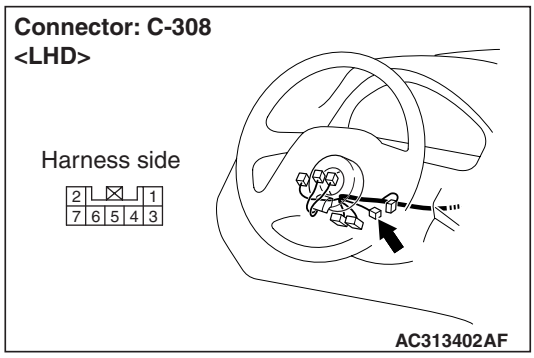

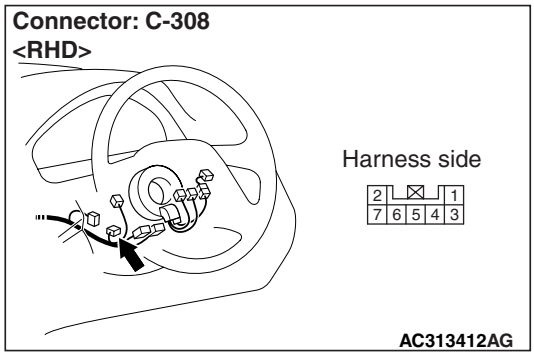

- Check the input line for open circuit.

Q: Is the check result normal?
YES : Go to Step 8.
NO : Repair the wiring harness.

Main Index
Group TOC

Step 8. Retest the system.
Check that the key reminder switch signal is received normally.

Q: Is the check result normal?
YES : . The trouble can be an intermittent malfunction (Refer to GROUP 00 – How to Cope with Intermittent Malfunction P.00-5).
NO : . Replace the ETACS-ECU.

INSPECTION PROCEDURE P-11: The hazard warning lamp switch signal is not received.

⚠ CAUTION
Whenever the ECU is replaced, ensure that the input signal circuit is normal.

Hazard Warning Lamp Switch Input Circuit

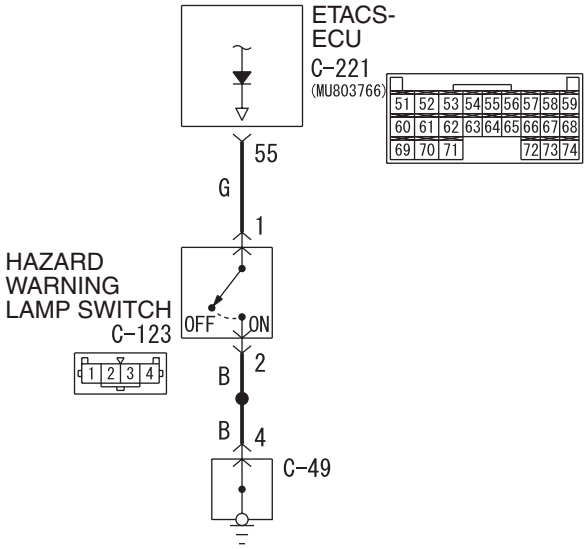

Wire colour code
B : Black LG : Light green G : Green L : Blue W : White Y : Yellow SB : Sky blue
BR : Brown O : Orange GR : Grey R : Red P : Pink V : Violet PU : Purple

W6X54X023A

COMMENTS ON TROUBLE SYMPTOM

Input signal from the hazard warning lamp switch is used to operate the functions below. If the signal is abnormal, these functions will not work normally.

- Keyless entry system (encrypted code registration)
- Hazard warning lamp

POSSIBLE CAUSES

- Malfunction of the hazard warning lamp switch
- Malfunction of the ETACS-ECU
- Damaged harness wires and connectors

Main Index
Group TOC

DIAGNOSTIC PROCEDURE

Step 1. Connector check: C-123 hazard warning lamp switch connector

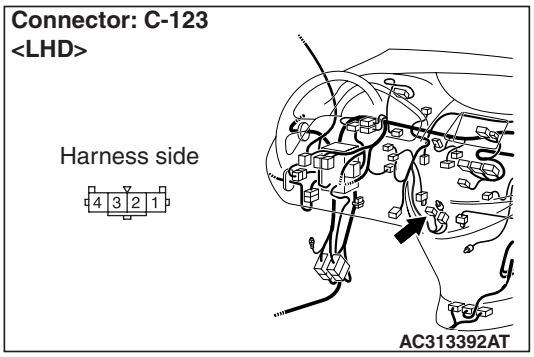

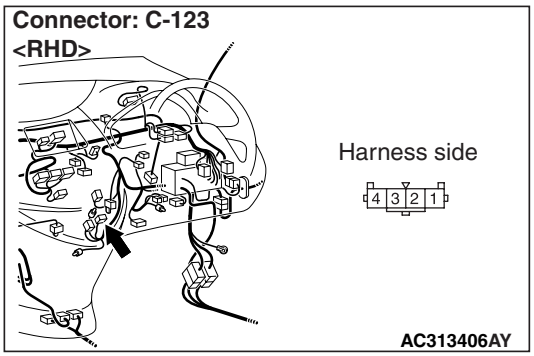

Q: Is the check result normal?
YES : Go to Step 2.
NO : Repair the defective connector.

Step 2. Check the hazard warning lamp switch.

Refer to GROUP 54A – Hazard warning lamp switch P.54A-158.

Q: Is the check result normal?
YES : Go to Step 3.
NO : Replace the hazard warning lamp switch.

Step 3. Resistance measurement at the C-123 hazard warning lamp switch connector.

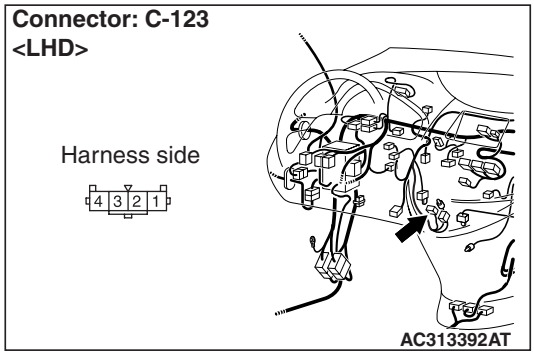

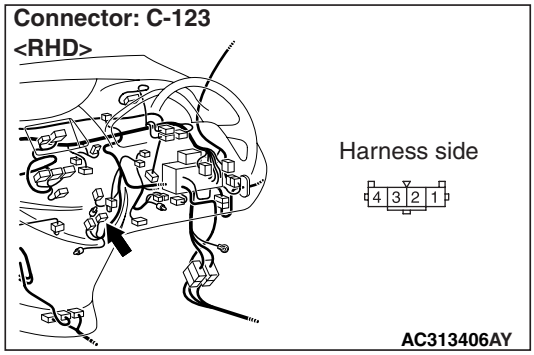

(1) Disconnect the connector, and measure at the wiring harness side.

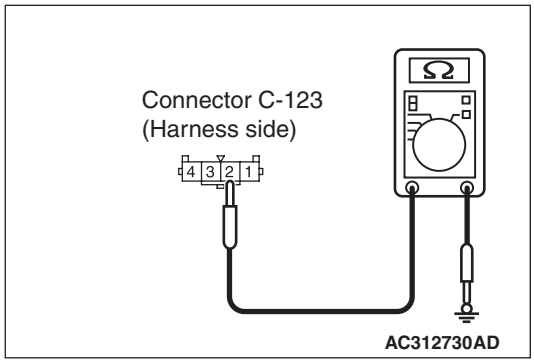

(2) Resistance between C-123 hazard warning lamp switch connector terminal No.2 and body earth

OK: 2 Ω or less

Q: Is the check result normal?
YES : Go to Step 5.
NO : Go to Step 4.

Main Index
Group TOC

Step 4. Connector check: C-49 earth connector

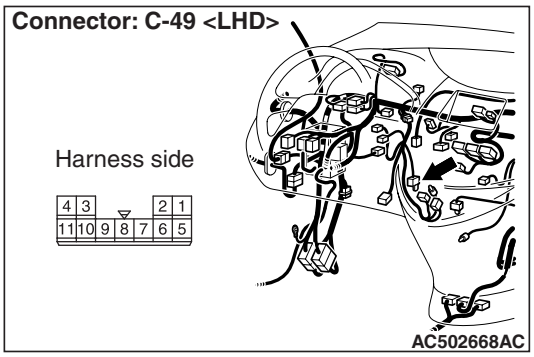

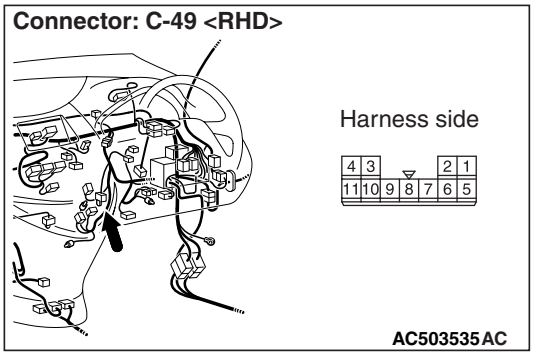

Q: Is the check result normal?
YES : Go to Step 5.
NO : Repair the connector.

Step 5. Check the wiring harness between C-123 hazard warning lamp switch connector terminal No.2 and C-49 earth connector terminal No.4.

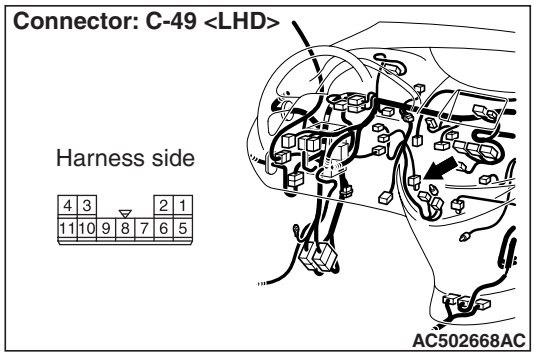

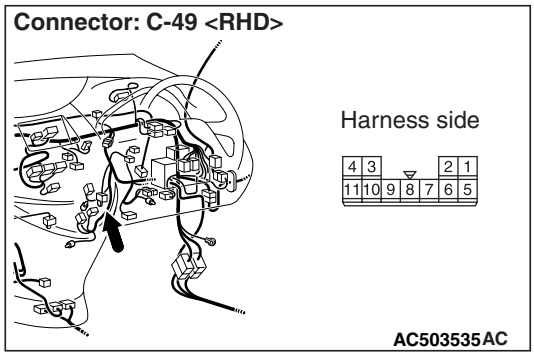

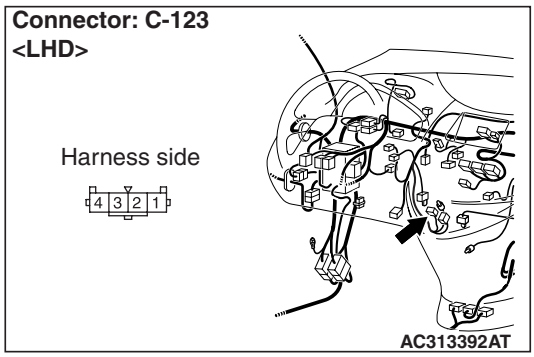

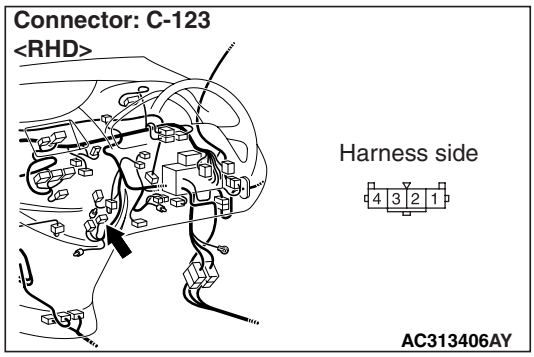

- Check the earth wires for open circuit.

Q: Is the check result normal?
YES : The trouble can be an intermittent malfunction (Refer to GROUP 00 – How to Cope with Intermittent Malfunction P.00-5).
NO : Repair the wiring harness.

Main Index
Group TOC

Step 6. Connector check: C-221 ETACS-ECU connector

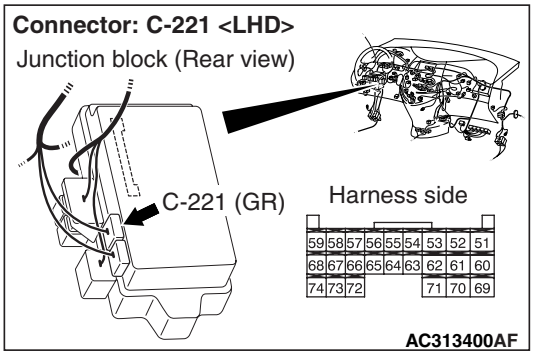

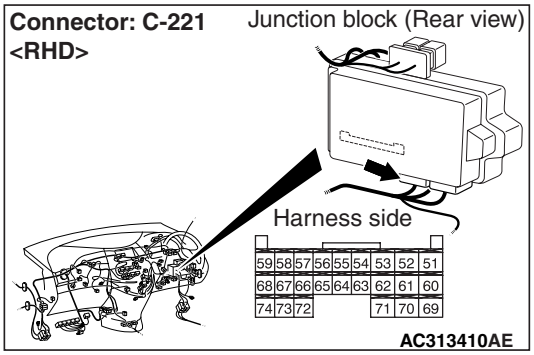

Q: Is the check result normal?
YES : Go to Step 7.
NO : Repair the defective connector.

Step 7. Check the wiring harness between C-221 ETACS-ECU connector terminal No.55 and C-123 hazard warning lamp switch connector terminal No.1.

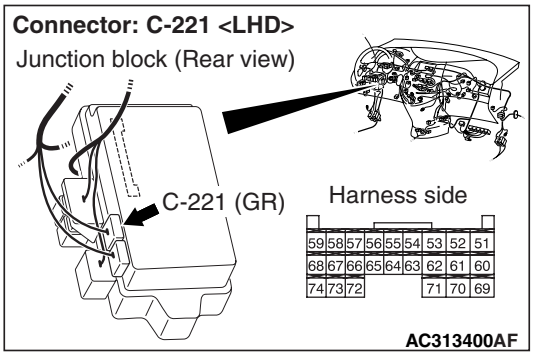

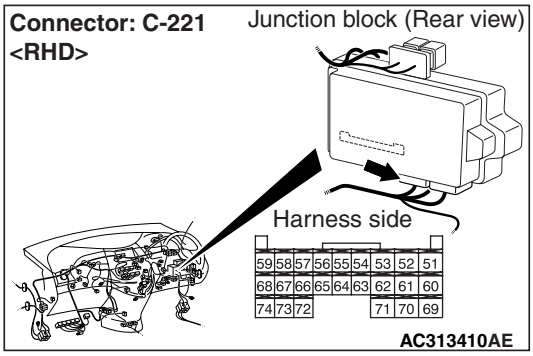

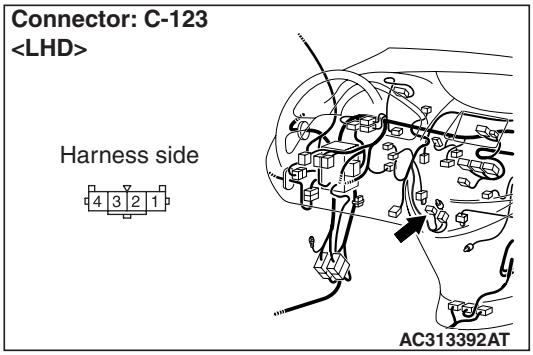

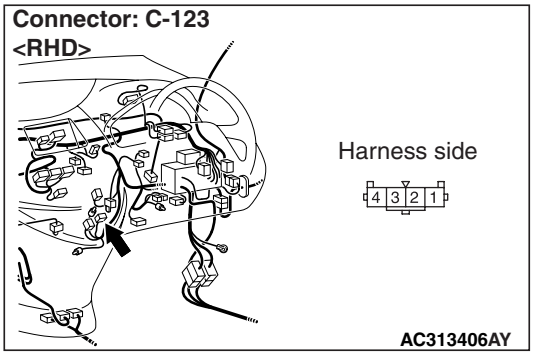

- Check the input line for open circuit.

Q: Is the check result normal?
YES : Go to Step 8.
NO : Repair the wiring harness.

Main Index
Group TOC

Step 8. Retest the system.

Check that the hazard warning lamp switch signal is received normally.

Q: Is the check result normal?

YES : . The trouble can be an intermittent malfunction (Refer to GROUP 00 – How to Cope with Intermittent Malfunction P.00-5).

NO : . Replace the ETACS-ECU.

INSPECTION PROCEDURE P-12: All the door switch signals are not received.

⚠ CAUTION

Whenever the ECU is replaced, ensure that the input signal circuit is normal.

Door Switches Input Circuit <LHD>

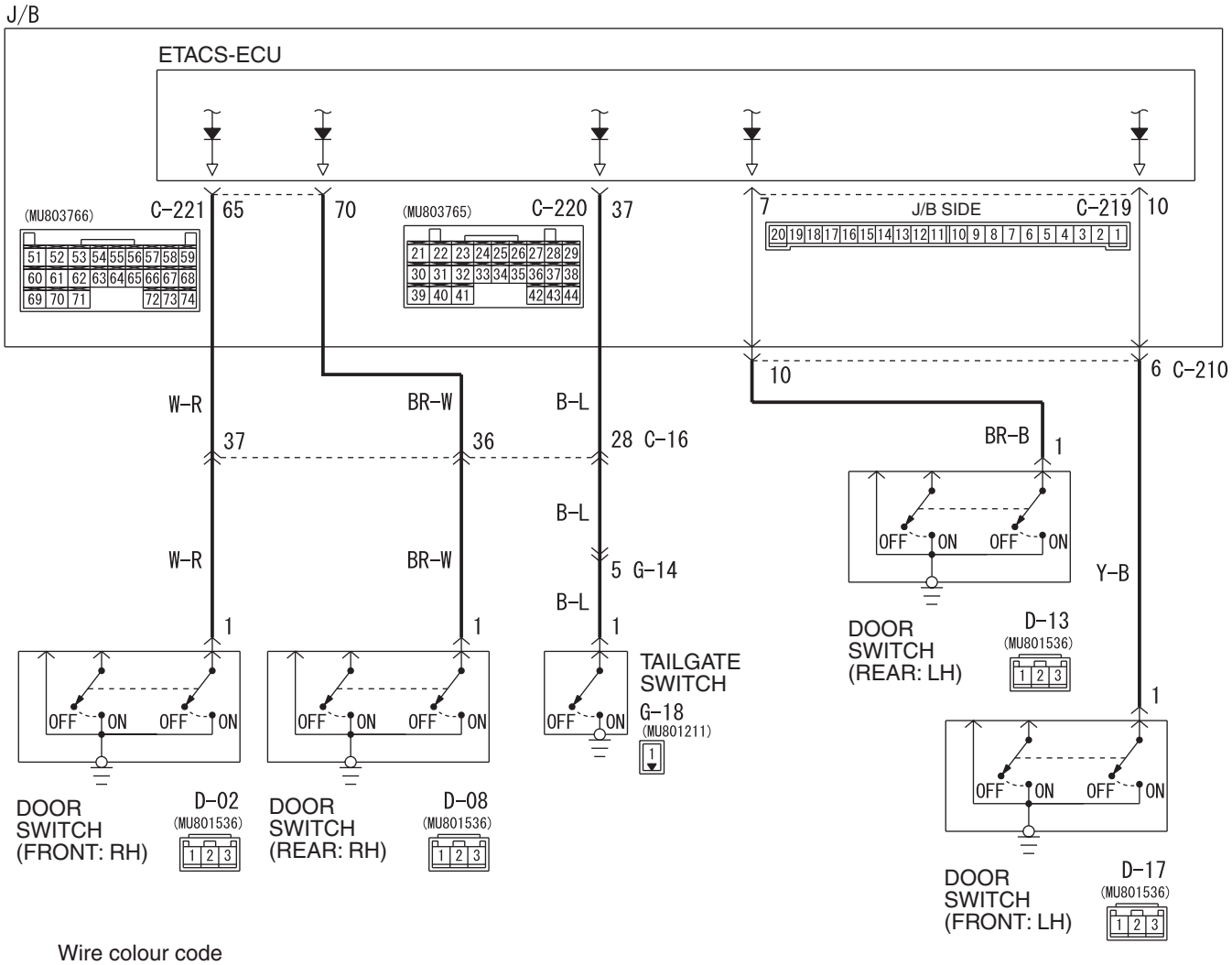

Wire colour code
B : Black LG : Light green G : Green L : Blue W : White Y : Yellow SB : Sky blue
BR : Brown O : Orange GR : Gray R : Red P : Pink V : Violet

W4X54E137A

Main Index
Group TOC

Door Switches Input Circuit <RHD>

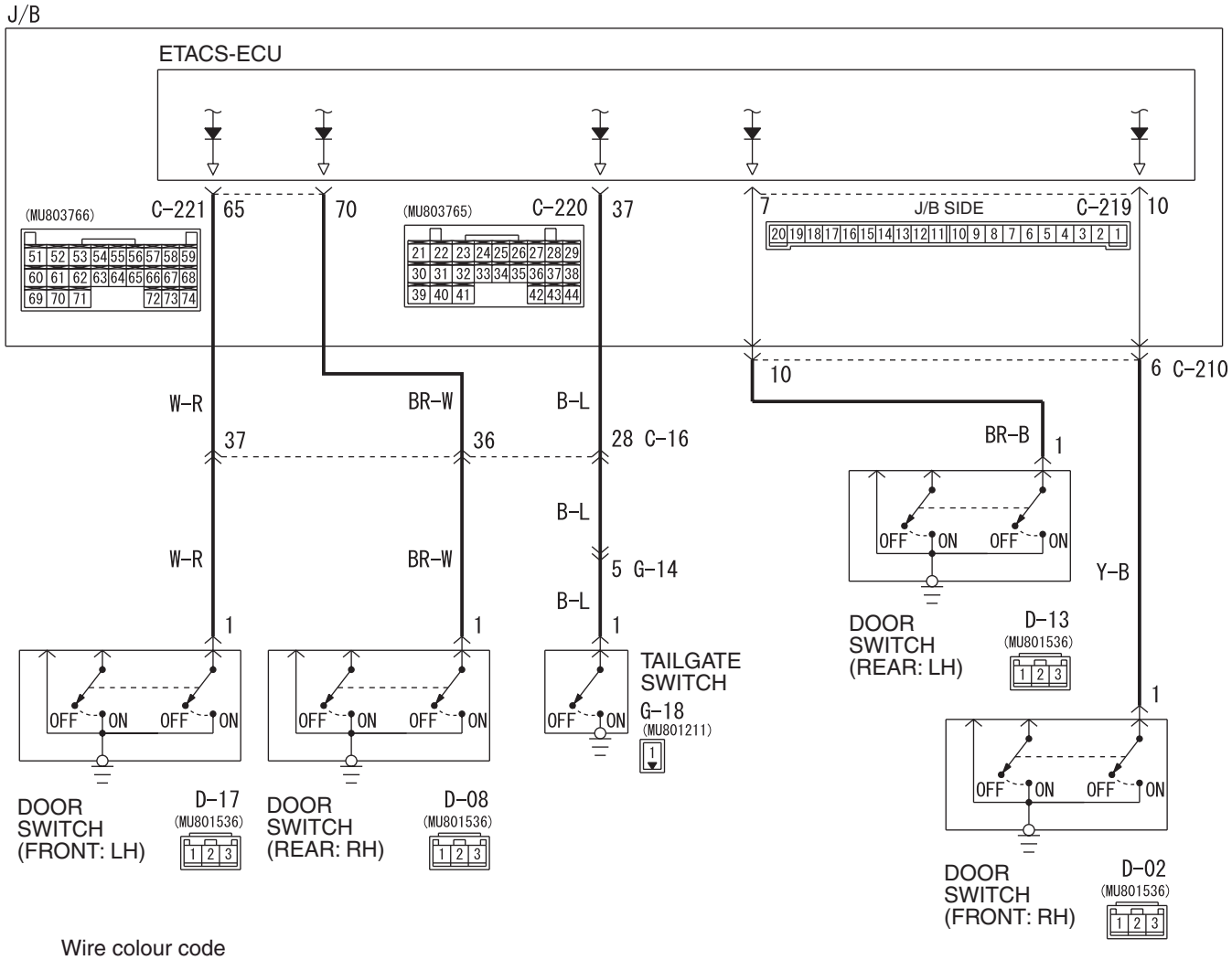

Wire colour code
B : Black LG : Light green G : Green L : Blue W : White Y : Yellow SB : Sky blue
BR : Brown O : Orange GR : Gray R : Red P : Pink V : Violet

W4X54E138A

COMMENTS ON TROUBLE SYMPTOM

Input signals from all the door switches and tailgate switch are used to operate the functions below. If the signal(s) are abnormal, these functions will not work normally.

- Keyless entry system
- Room lamps

POSSIBLE CAUSES

- Malfunction of the door switches
- Malfunction of the tailgate switch
- Malfunction of the ETACS-ECU
- Damaged harness wires and connectors

DIAGNOSTIC PROCEDURE

Step 1. Pulse check

Check the input signal from the driver's door switch.

System switch	Check conditions
Driver's door switch	When the driver's door is opened

OK: The M.U.T.-III sounds or the voltmeter needle fluctuates.

Q: Is the check result normal?

YES : Go to Step 2.

NO : Refer to inspection procedure P-5 "The driver's door switch signal is not received <L.H. drive vehicles>P.54B-333 or <R.H. drive vehicles>P.54B-335 ."

Main Index
Group TOC

Step 2. Connector check: D-17 (front: LH), D-02 (front: RH), D-08 (rear: RH) or D-13 (rear: LH) door switch connectors or G-18 tailgate switch connector, and C-219, C-220 and C-221 ETACS-ECU connector

Connectors: C-219, C-220, C-221 <LHD>

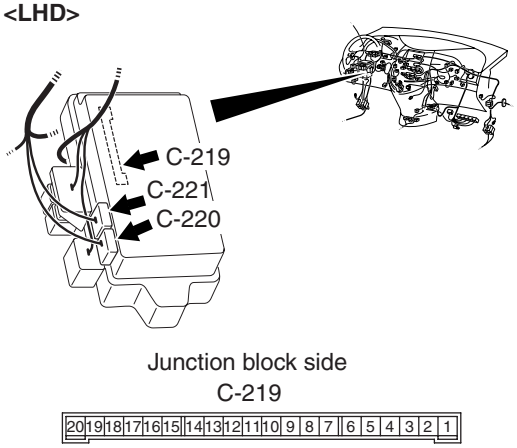

AC313401AC

Connectors: C-219, C-220, C-221 <RHD>

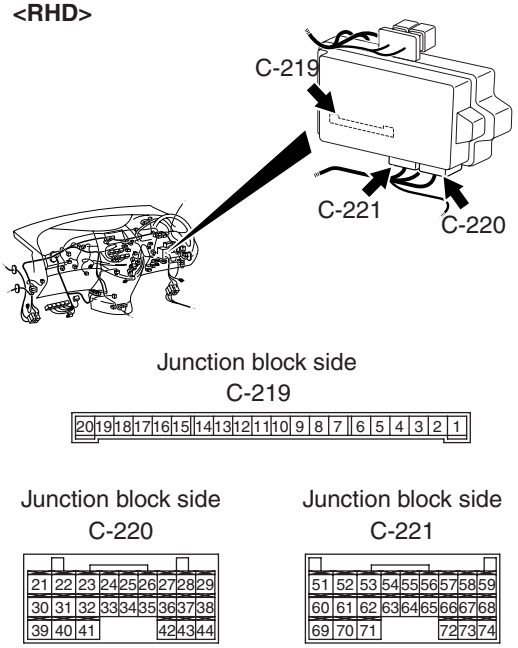

AC313411AC

Connectors: D-02, D-08, D-13, D-17 <LHD>

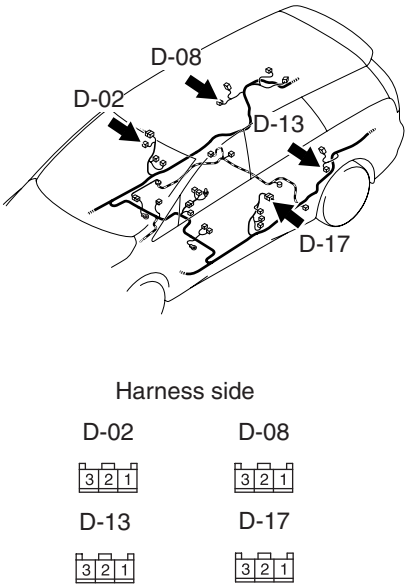

AC313426AD

Connectors: D-02, D-08, D-13, D-17 <RHD>

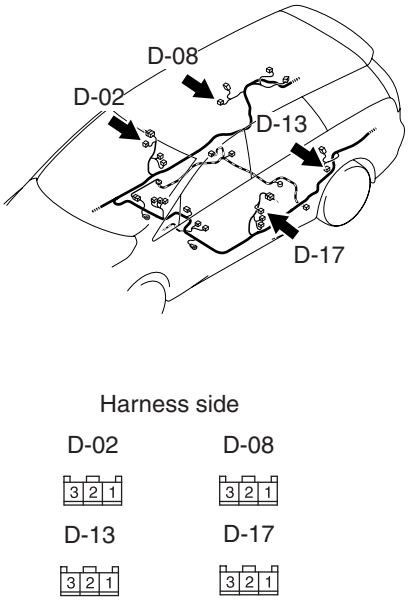

AC313428AD

Main Index
Group TOC

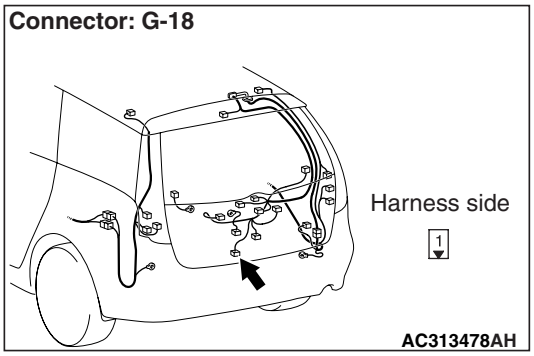

Q: Is the check result normal?
YES : Go to Step 3.
NO : Repair the defective connector.

Step 3. Check the installation condition.
Check that the door switch is installed on the body correctly.

Q: Is the check result normal?
YES : Go to Step 4.
NO : Correct the installation condition.

Step 4. Check the door switch.
Refer to GROUP 42 – Door P.42-36.

Q: Is the check result normal?
YES : Go to Step 5.
NO : Replace the door switch.

Step 5. Check the wiring harness from terminal No.1 of the D-17 (front: LH), D-02 (front: RH), D-08 (rear: RH) or D-13 (rear: LH) door switch connector or terminal No.1 of the G-18 tailgate switch connector to terminal No.65 (front: LH and RH), No.70 (rear: RH), No.7 (rear: LH) or No.37 (tailgate) of the C-219, C-220 and C-221 ETACS-ECU connector.

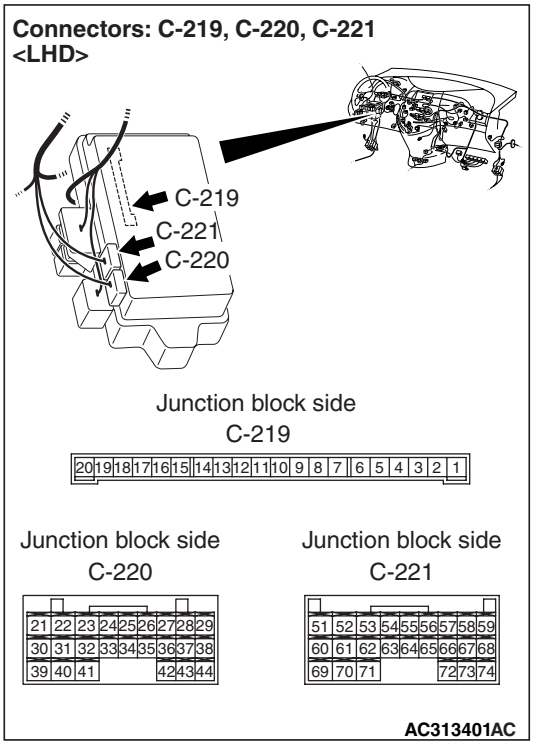

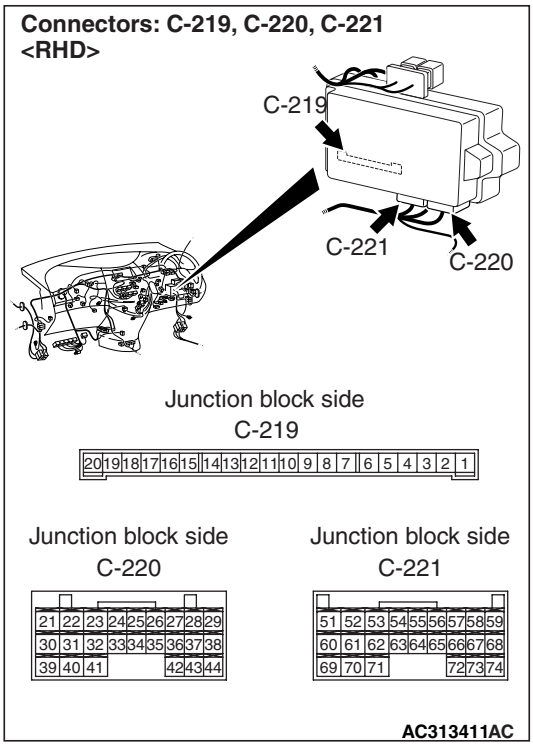

Main Index
Group TOC

Connectors: D-02, D-08, D-13, D-17 <LHD>

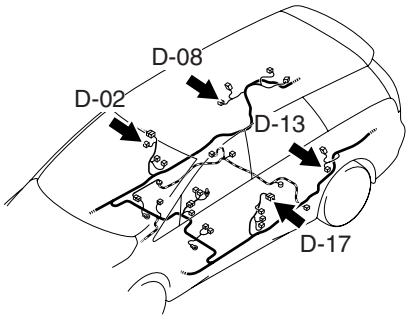

Harness side

D-02 D-08

D-13 D-17

AC313426AD

Connectors: D-02, D-08, D-13, D-17 <RHD>

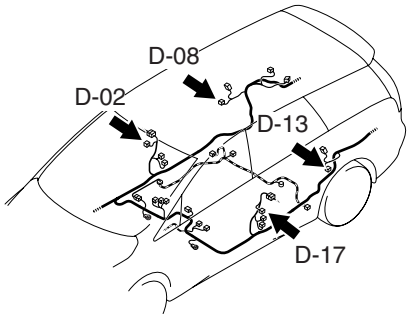

Harness side

D-02 D-08

D-13 D-17

AC313428AD

Connector: G-18

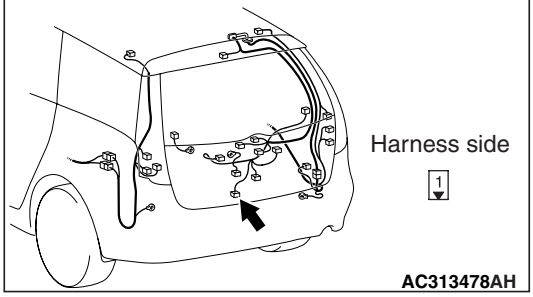

AC313478AH

NOTE:

Connector: C-16 <LHD>

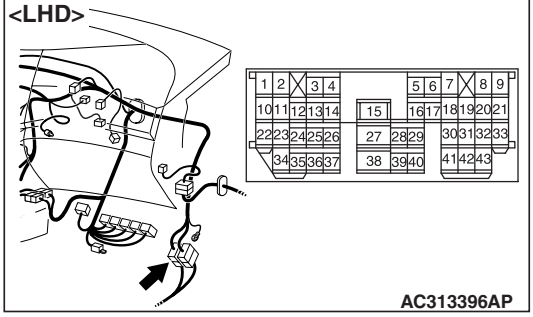

AC313396AP

Connector: C-16 <RHD>

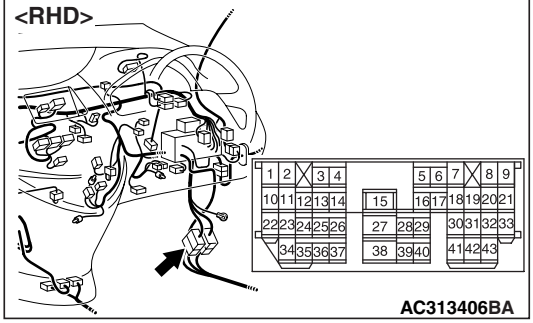

AC313406BA

Connector: C-210 <LHD>
Junction block (Front view)

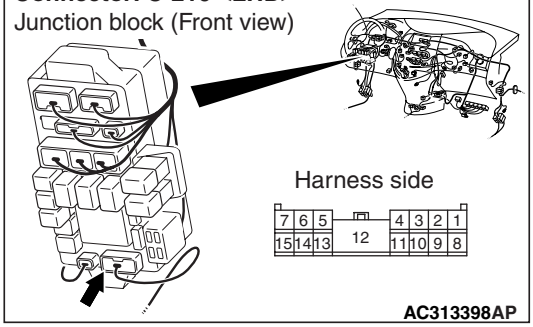

AC313398AP

Connector: C-210 <RHD>
Junction block (Front view)

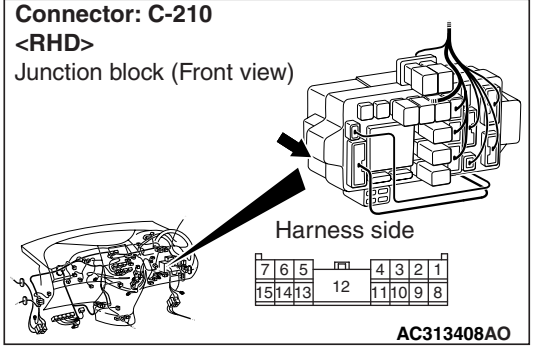

AC313408AO

Main Index
Group TOC

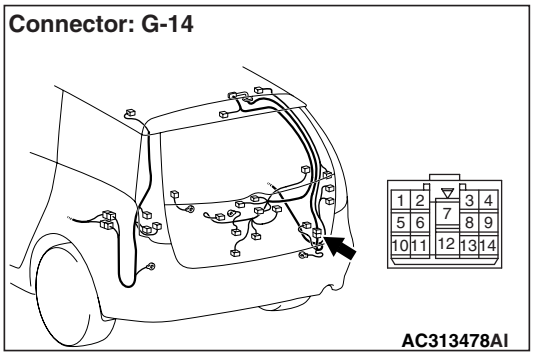

Prior to the wiring harness inspection, check intermediate connector C-16 (front: RH <LH drive vehicles>, front: LH <RH drive vehicles>, rear: RH and tailgate) or G-14 (tailgate) and junction block connector C-210 (rear: LH <RH drive vehicles>, rear: RH and tailgate) and repair if necessary.

- Check the input line for open circuit.

Q: Is the check result normal?

YES : . Go to Step 6.

NO : . Repair the wiring harness between each of the door switches and the ETACS-ECU.

Step 6. Retest the system.

Check that all the all door switch signals are received normally.

Q: Is the check result normal?

YES : The trouble can be an intermittent malfunction (Refer to GROUP 00 – How to Cope with Intermittent Malfunction P.00-5).

NO : Replace the ETACS-ECU.

Main Index
Group TOC

INSPECTION PROCEDURE P-13: The driver's door lock actuator switch signal is not received. <LH drive vehicles>

⚠ CAUTION
Whenever the ECU is replaced, ensure that the input signal circuit is normal.

Door Lock Actuator Input Circuit <LHD>

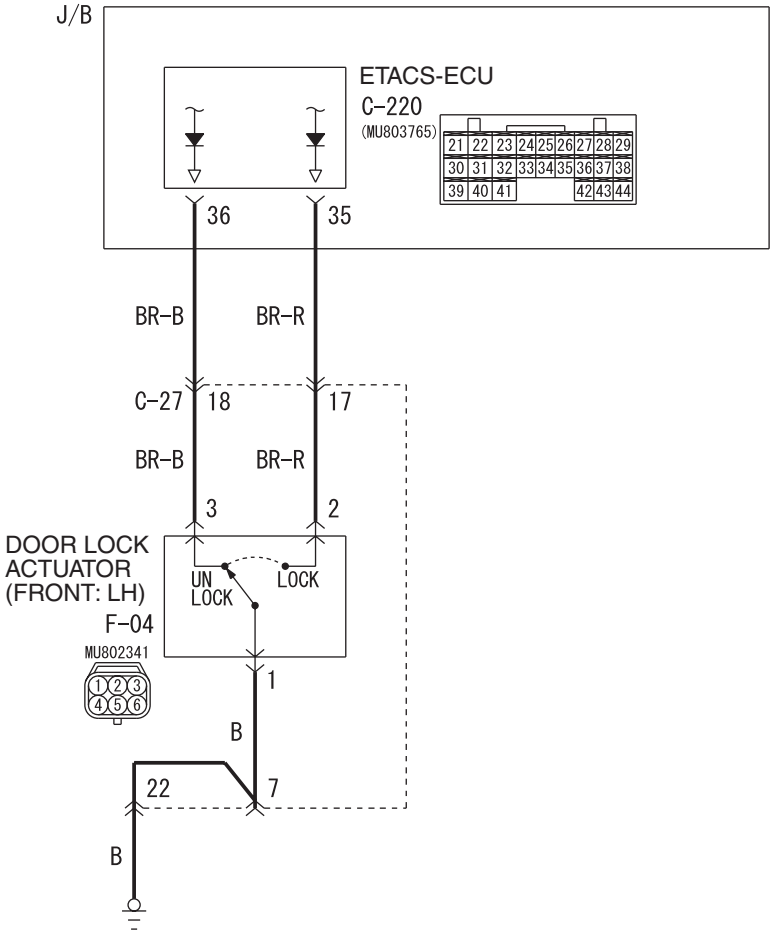

Wire colour code
B : Black LG : Light green G : Green L : Blue W : White Y : Yellow SB : Sky blue
BR : Brown O : Orange GR : Gray R : Red P : Pink V : Violet

W4X54E140A

COMMENTS ON TROUBLE SYMPTOM

Input signal from the driver's door lock actuator is used to operate the functions below. If the signal is abnormal, these functions will not work normally.

- Key reminder function
- Central door locking
- Keyless entry system
- Interior lamps

POSSIBLE CAUSES

- Malfunction of the front door lock actuator (LH)
- Malfunction of the ETACS-ECU
- Damaged harness wires and connectors

Main Index
Group TOC

DIAGNOSTIC PROCEDURE

Step 1. Connector check: F-04 front door lock actuator (LH) connector

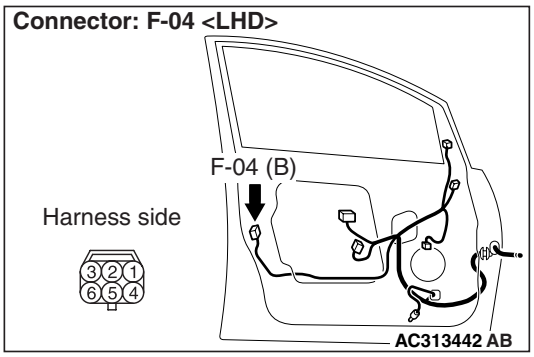

Q: Is the check result normal?
YES : Go to Step 2.
NO : Repair the defective connector.

Step 2. Check the front door lock actuator (LH).

Refer to GROUP 42 – Door P.42-45.

Q: Is the check result normal?
YES : Go to Step 3.
NO : Replace the front door lock actuator (RH).

Step 3. Resistance measurement at the F-04 front door lock actuator (LH) connector.

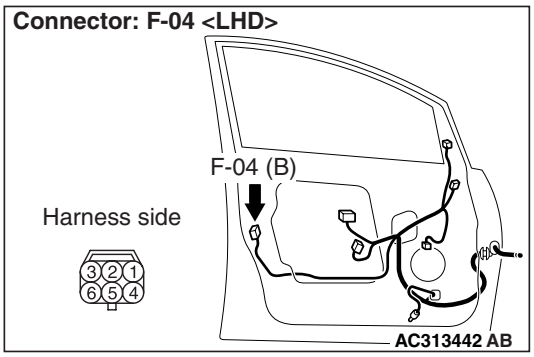

(1) Disconnect the connector, and measure at the wiring harness side.

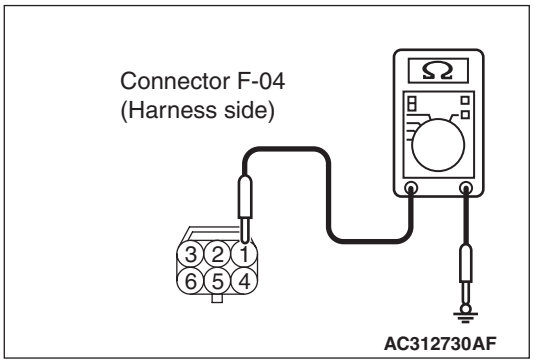

(2) Resistance between F-04 front door lock actuator (LH) connector terminal No.1 and body earth

OK: 2 Ω or less

Q: Is the check result normal?
YES : Go to Step 5.
NO : Go to Step 4.

Step 4. Check the wiring harness between F-04 front door lock actuator (LH) connector terminal No.1 and body earth

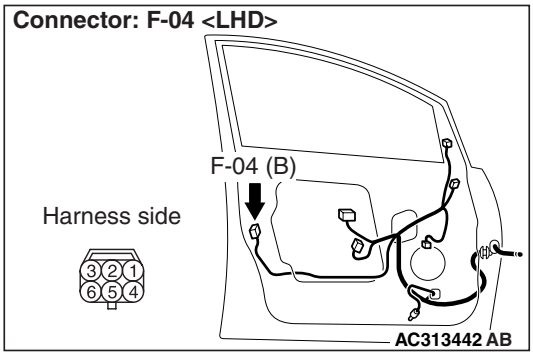

NOTE:

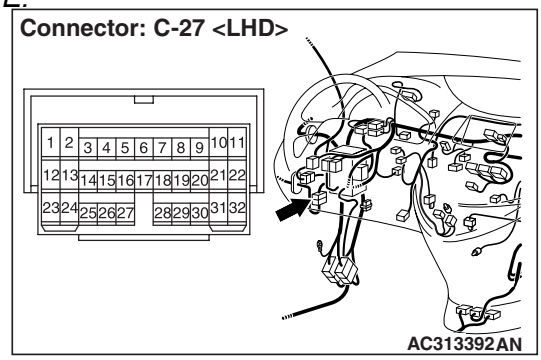

Prior to the wiring harness inspection, check intermediate connector C-27, and repair if necessary.

- Check the earth wires for open circuit.

Q: Is the check result normal?
YES : The trouble can be an intermittent malfunction (Refer to GROUP 00 – How to Cope with Intermittent Malfunction P.00-5).
NO : Repair the wiring harness.

Main Index
Group TOC

Step 5. Connector check: C-220 ETACS-ECU connector

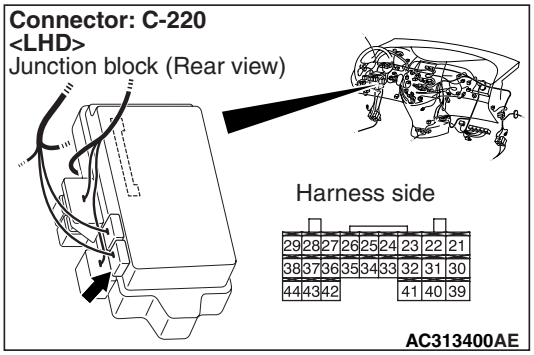

Q: Is the check result normal?
YES : Go to Step 6.
NO : Repair the defective connector.

Step 6. Check the wiring harness from F-04 front door lock actuator (LH) connector terminal Nos. 2 and 3 to C-220 ETACS-ECU connector terminal Nos. 35 and 36.

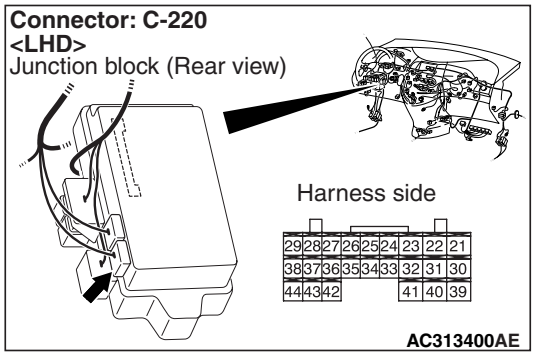

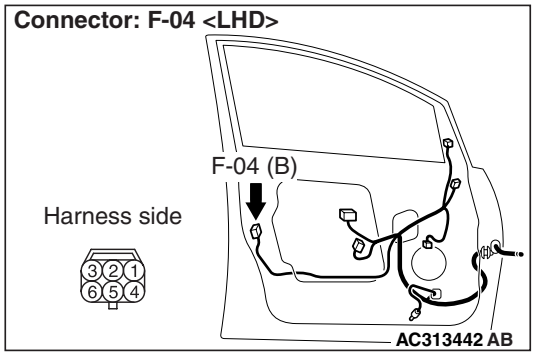

NOTE:

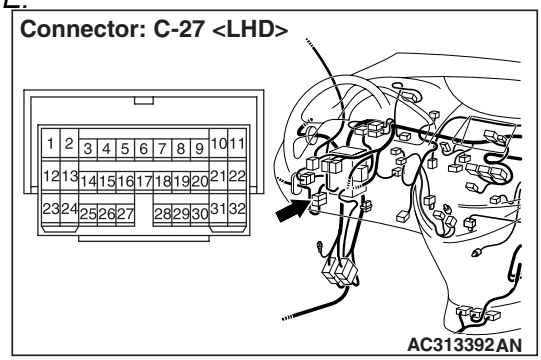

Prior to the wiring harness inspection, check intermediate connector C-27, and repair if necessary.

- Check the input line for open circuit.

Q: Is the check result normal?
YES : Go to Step 7.
NO : Repair the wiring harness.

Step 7. Retest the system.

Check that the driver's door lock actuator switch signal is received normally.

Q: Is the check result normal?
YES : The trouble can be an intermittent malfunction (Refer to GROUP 00 – How to Cope with Intermittent Malfunction P.00-5).
NO : Replace the ETACS-ECU.

Main Index
Group TOC

INSPECTION PROCEDURE P-13: The driver's door lock actuator switch signal is not received. <RH drive vehicles>

⚠ CAUTION

Whenever the ECU is replaced, ensure that the input signal circuit is normal.

Door Lock Actuator Input Circuit <RHD>

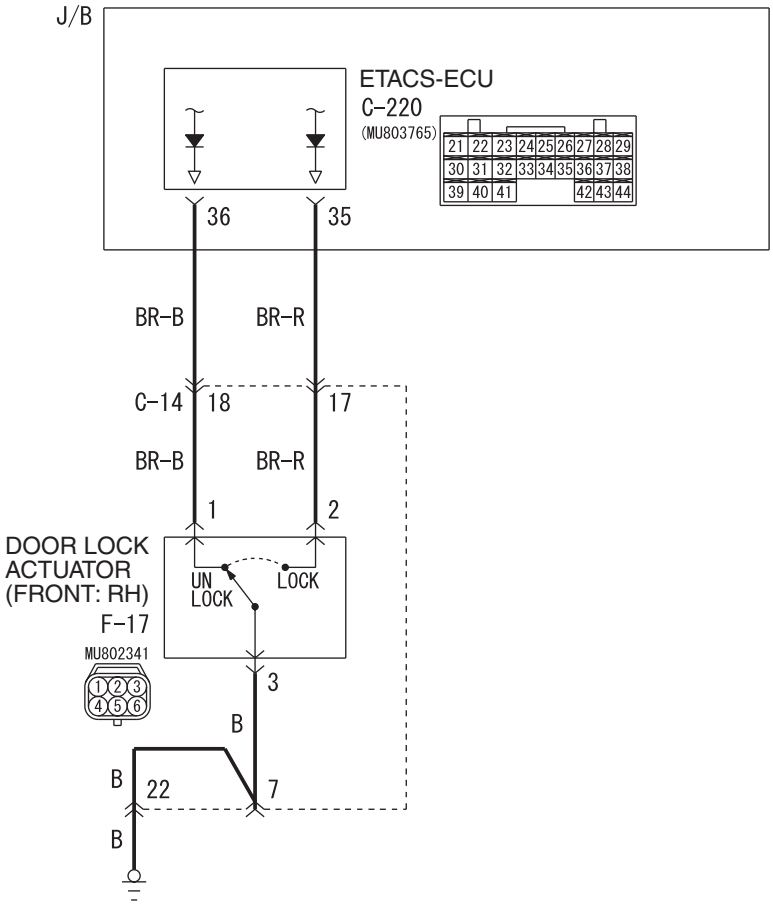

Wire colour code
B : Black LG : Light green G : Green L : Blue W : White Y : Yellow SB : Sky blue
BR : Brown O : Orange GR : Gray R : Red P : Pink V : Violet

W4X54E146A

COMMENTS ON TROUBLE SYMPTOM

Input signal from the front door lock actuator (RH) is used to operate the functions below. If the signal is abnormal, these functions will not work normally.

- Central door locking
- Keyless entry system
- Interior lamps

POSSIBLE CAUSES

- Malfunction of the front door lock actuator (RH)
- Malfunction of the ETACS-ECU
- Damaged harness wires and connectors

Main Index
Group TOC

DIAGNOSTIC PROCEDURE

Step 1. Connector check: F-17 front door lock actuator (RH) connector

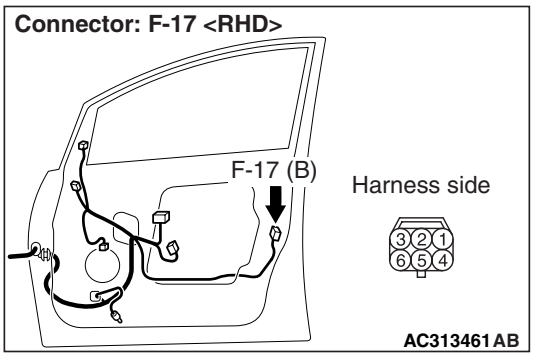

Q: Is the check result normal?
YES : Go to Step 2.
NO : Repair the defective connector.

Step 2. Check the front door lock actuator (RH).

Refer to GROUP 42 – Door P.42-45.

Q: Is the check result normal?
YES : Go to Step 3.
NO : Replace the front door lock actuator (RH).

Step 3. Resistance measurement at the F-17 front door lock actuator (RH) connector

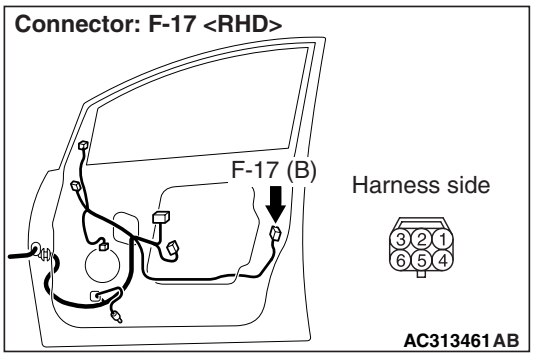

(1) Disconnect the connector, and measure at the wiring harness side.

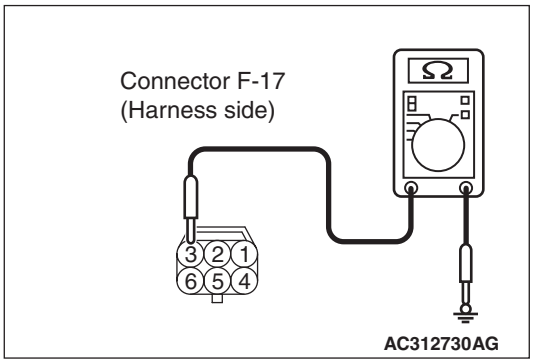

(2) Resistance between F-17 front door lock actuator (RH) connector terminal No.3 and body earth

OK: 2 Ω or less

Q: Is the check result normal?
YES : Go to Step 5.
NO : Go to Step 4.

Step 4. Check the wiring harness between F-17 front door lock actuator (RH) connector terminal No.3 and body earth

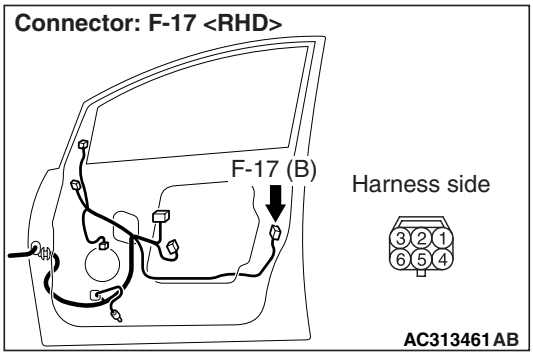

NOTE:

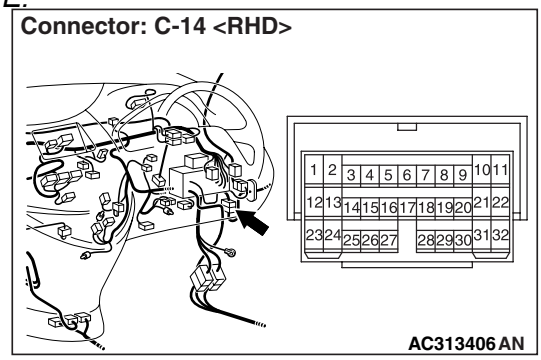

Prior to the wiring harness inspection, check intermediate connector C-14, and repair if necessary.

- Check the earth wires for open circuit.

Q: Is the check result normal?
YES : The trouble can be an intermittent malfunction (Refer to GROUP 00 – How to Cope with Intermittent Malfunction P.00-5).
NO : Repair the wiring harness.

Main Index
Group TOC

Step 5. Connector check: C-220 ETACS-ECU connector

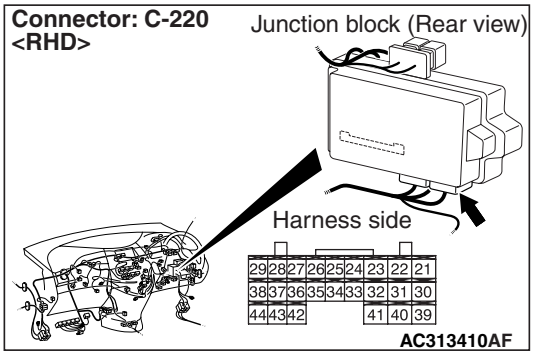

Q: Is the check result normal?
YES : Go to Step 6.
NO : Repair the defective connector.

Step 6. Check the wiring harness from F-17 front door lock actuator (RH) connector terminal Nos. 1 and 2 to C-220 ETACS-ECU connector terminal Nos. 36 and 35.

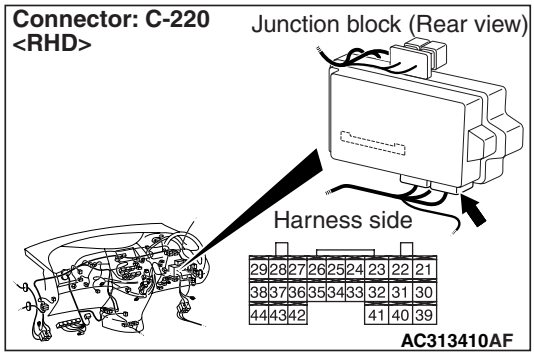

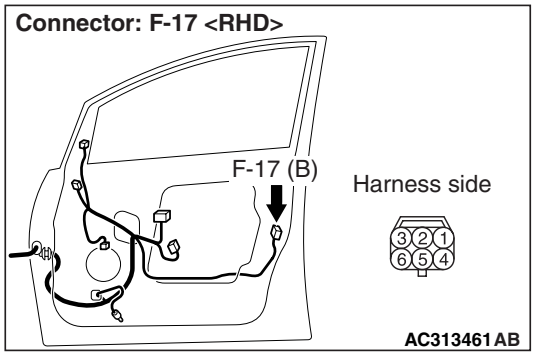

NOTE:

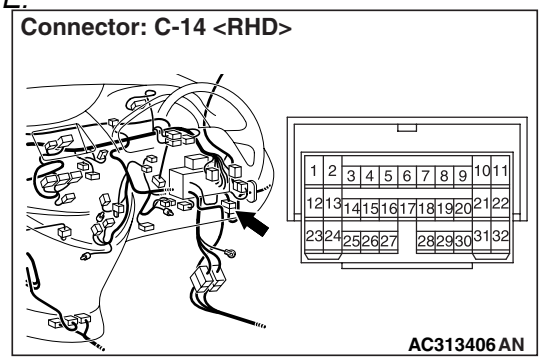

Prior to the wiring harness inspection, check intermediate connector C-14, and repair if necessary.

- Check the input line for open circuit.

Q: Is the check result normal?
YES : Go to Step 7.
NO : Repair the wiring harness.

Step 7. Retest the system.

Check that the front door lock actuator (RH) switch signal is received normally.

Q: Is the check result normal?
YES : The trouble can be an intermittent malfunction (Refer to GROUP 00 – How to Cope with Intermittent Malfunction P.00-5).
NO : Replace the ETACS-ECU.

Main Index
Group TOC

INSPECTION PROCEDURE P-14: The passenger's door key switch signal is not detected. <L.H. drive vehicles>

⚠ CAUTION
Whenever the ECU is replaced, ensure that the input signal circuit is normal.

Door Lock Key Cylinder Switch Input Circuit <LHD>

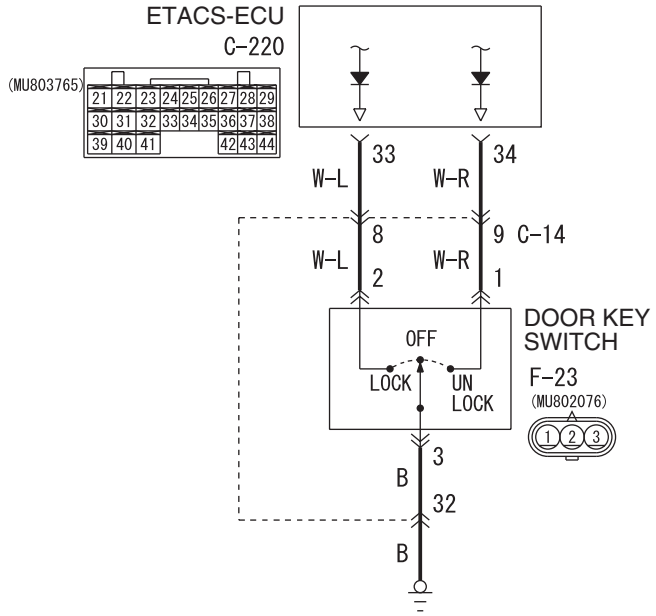

Wire colour code
B : Black LG : Light green G : Green L : Blue W : White Y : Yellow SB : Sky blue
BR : Brown O : Orange GR : Gray R : Red P : Pink V : Violet

W4X54E144A

COMMENTS ON TROUBLE SYMPTOM

Input signal from the front passenger's door key switch is used to operate the central door locking function. If the signal is abnormal, the central door locking function will not work normally.

POSSIBLE CAUSES

- Malfunction of the front passenger's door key switch
- Malfunction of the ETACS-ECU
- Damaged harness wires and connectors

DIAGNOSTIC PROCEDURE

Step 1. Connector check: F-23 door key switch connector

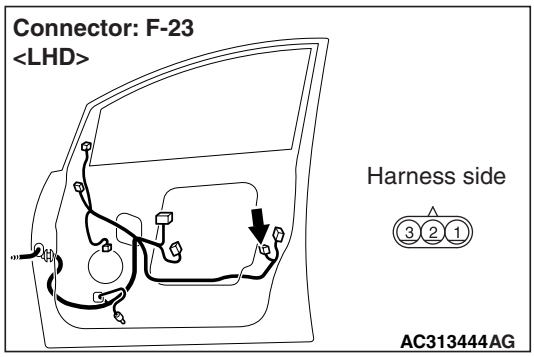

Q: Is the check result normal?
YES : Go to Step 2.
NO : Repair the defective connector.

Main Index
Group TOC

Step 2. Check the door key switch.
Refer to GROUP 42 – Door P.42-45.

Q: Is the check result normal?
YES : Go to Step 3.
NO : Replace the door key switch.

Step 3. Resistance measurement at the F-23 door key switch connector.

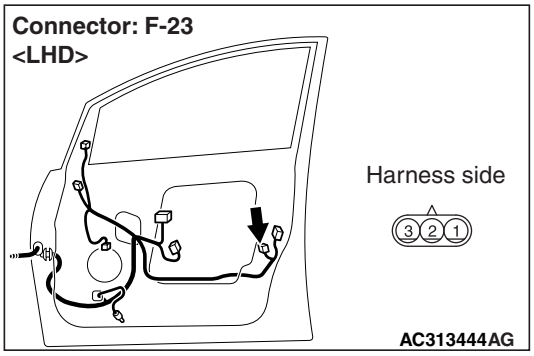

(1) Disconnect the connector, and measure at the wiring harness side.

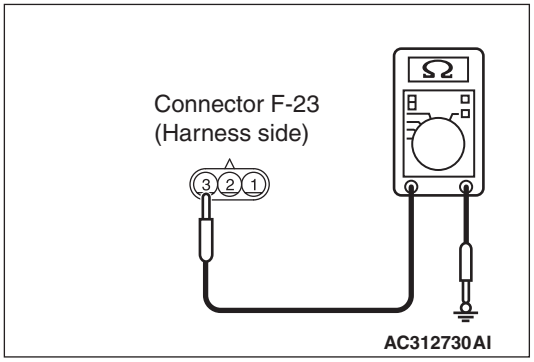

(2) Resistance between F-23 door key switch connector terminal No.3 and body earth

OK: 2 Ω or less

Q: Is the check result normal?
YES : Go to Step 5.
NO : Go to Step 4.

Step 4. Check the wiring harness between F-23 door key switch connector terminal No.3 and body earth.

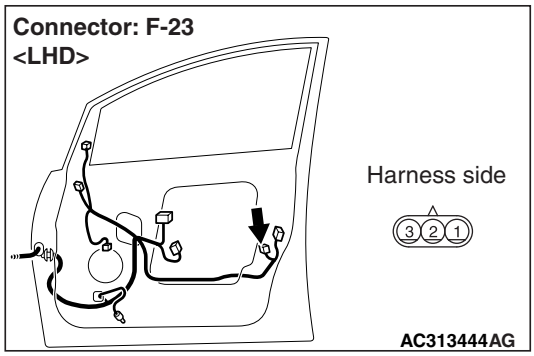

NOTE:

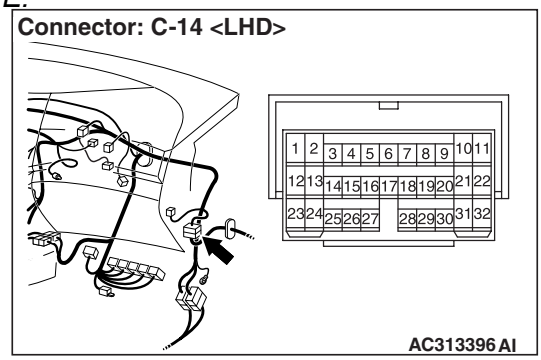

Prior to the wiring harness inspection, check intermediate connector C-14, and repair if necessary.

- Check the earth wires for open circuit.

Q: Is the check result normal?
YES : Intermittent malfunction. (Refer to GROUP 00 – How to Cope with Intermittent Malfunction P.00-5).
NO : Repair the wiring harness.

Step 5. Connector check: C-220 ETACS-ECU connector

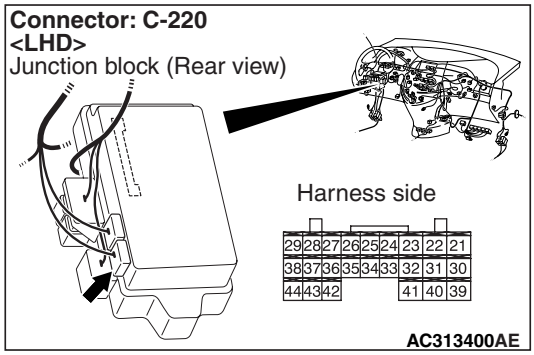

Q: Is the check result normal?
YES : Go to Step 6.
NO : Repair the defective connector.

Main Index
Group TOC

Step 6. Check the wiring harness from F-23 door key switch connector terminal Nos. 1 and 2 to C-220 ETACS-ECU connector terminal Nos. 34 and 33.

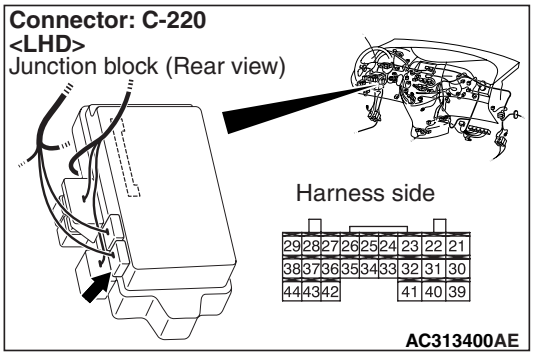

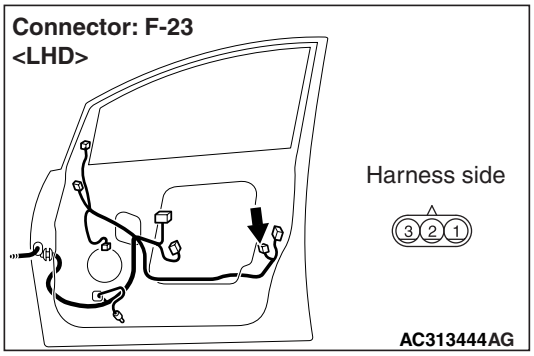

NOTE:

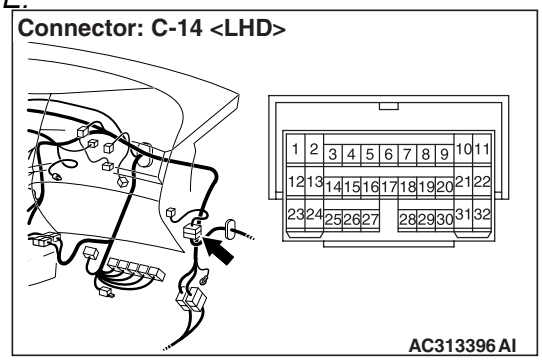

Prior to the wiring harness inspection, check intermediate connector C-14, and repair if necessary.

- Check the input line for open circuit.

Q: Is the check result normal?

YES : . Go to Step 7.

NO : . Repair the wiring harness.

Step 7. Retest the system.

Check that the passenger's door key switch signal is received normally.

Q: Is the check result normal?

YES : Intermittent malfunction. (Refer to GROUP 00 – How to Cope with Intermittent Malfunction P.00-5).

NO : Replace the ETACS-ECU.

Main Index
Group TOC

INSPECTION PROCEDURE P-14: The passenger's door key switch signal is not detected. <R.H. drive vehicles>

⚠ CAUTION
Whenever the ECU is replaced, ensure that the input signal circuit is normal.

Door Lock Key Cylinder Switch Input Circuit <RHD>

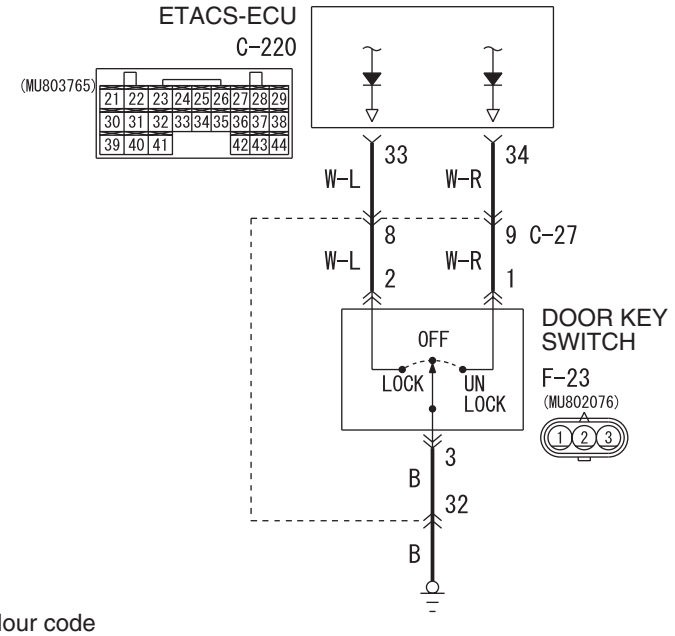

Wire colour code
B : Black LG : Light green G : Green L : Blue W : White Y : Yellow SB : Sky blue
BR : Brown O : Orange GR : Gray R : Red P : Pink V : Violet

W4X54X090A

COMMENTS ON TROUBLE SYMPTOM

Input signal from the front passenger's door key switch is used to operate the central door locking function. If the signal is abnormal, the central door locking function will not work normally.

POSSIBLE CAUSES

- Malfunction of the front passenger's door key switch
- Malfunction of the ETACS-ECU
- Damaged harness wires and connectors

DIAGNOSTIC PROCEDURE

Step 1. Connector check: F-23 door key switch connector

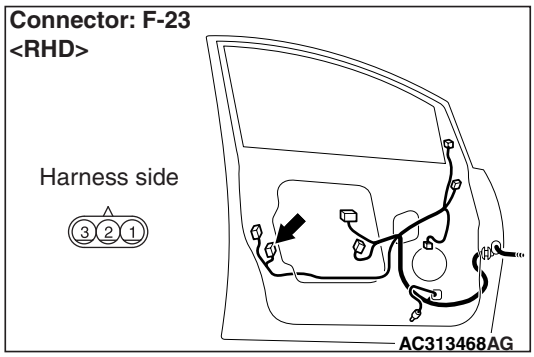

Q: Is the check result normal?
YES : Go to Step 2.
NO : Repair the defective connector.

Main Index
Group TOC

Step 2. Check the door key switch.
Refer to GROUP 42 – Door P.42-45.

Q: Is the check result normal?
YES : Go to Step 3.
NO : Replace the door key switch.

Step 3. Resistance measurement at the F-23 door key switch connector.

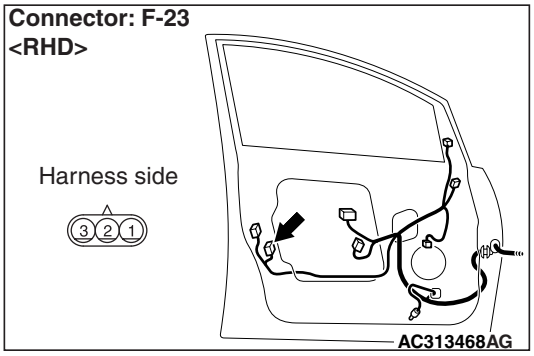

(1) Disconnect the connector, and measure at the wiring harness side.

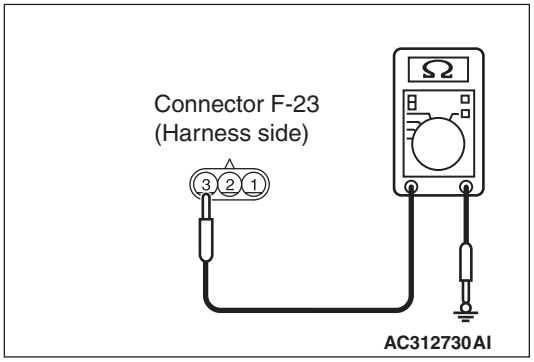

(2) Resistance between F-23 door key switch connector terminal No.3 and body earth

OK: 2 Ω or less

Q: Is the check result normal?
YES : Go to Step 5.
NO : Go to Step 4.

Step 4. Check the wiring harness between F-23 door key switch connector terminal No.3 and body earth.

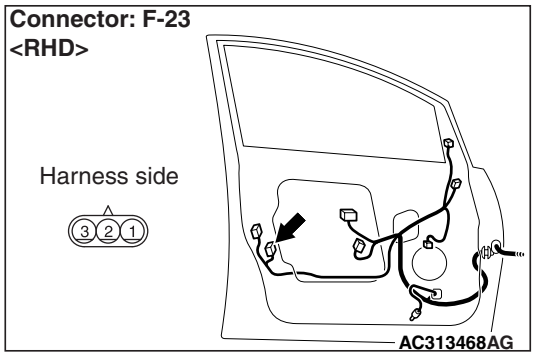

NOTE:

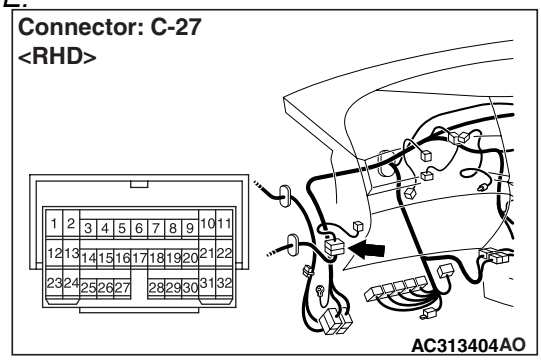

Prior to the wiring harness inspection, check intermediate connector C-27, and repair if necessary.

- Check the earth wires for open circuit.

Q: Is the check result normal?
YES : Intermittent malfunction. (Refer to GROUP 00 – How to Cope with Intermittent Malfunction P.00-5).
NO : Repair the wiring harness.

Step 5. Connector check: C-220 ETACS-ECU connector

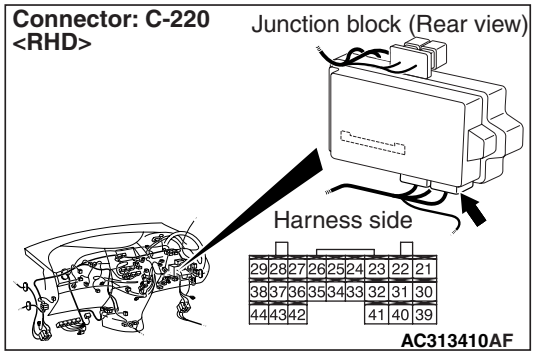

Q: Is the check result normal?
YES : Go to Step 6.
NO : Repair the defective connector.

Main Index
Group TOC

Step 6. Check the wiring harness from F-23 door key switch connector terminal Nos. 1 and 2 to C-220 ETACS-ECU connector terminal Nos. 34 and 33.

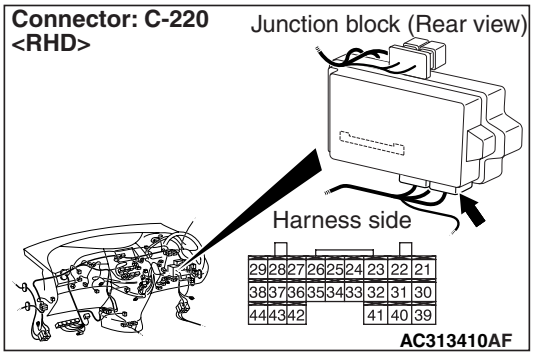

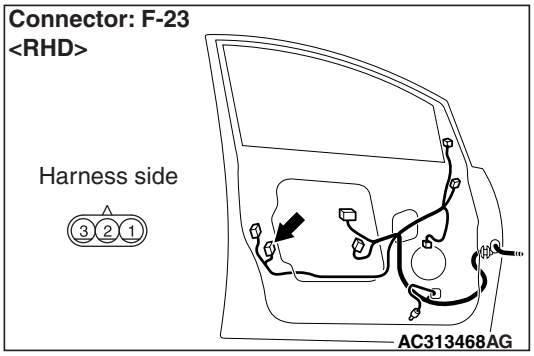

NOTE:

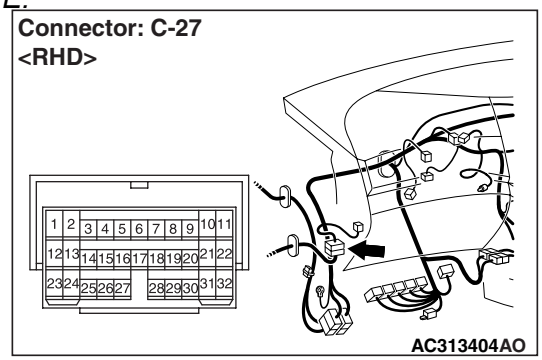

Prior to the wiring harness inspection, check intermediate connector C-27, and repair if necessary.

- Check the input line for open circuit.

Q: Is the check result normal?

YES : . Go to Step 7.

NO : . Repair the wiring harness.

Step 7. Retest the system.

Check that the passenger's door key switch signal is received normally.

Q: Is the check result normal?

YES : Intermittent malfunction. (Refer to GROUP 00 – How to Cope with Intermittent Malfunction P.00-5).

NO : Replace the ETACS-ECU.

Main Index
Group TOC

INSPECTION PROCEDURE P-15: The tailgate key switch signal is not detected.

⚠ CAUTION
Whenever the ECU is replaced, ensure that the input signal circuit is normal.

Tailgate Key Switch Input Circuit

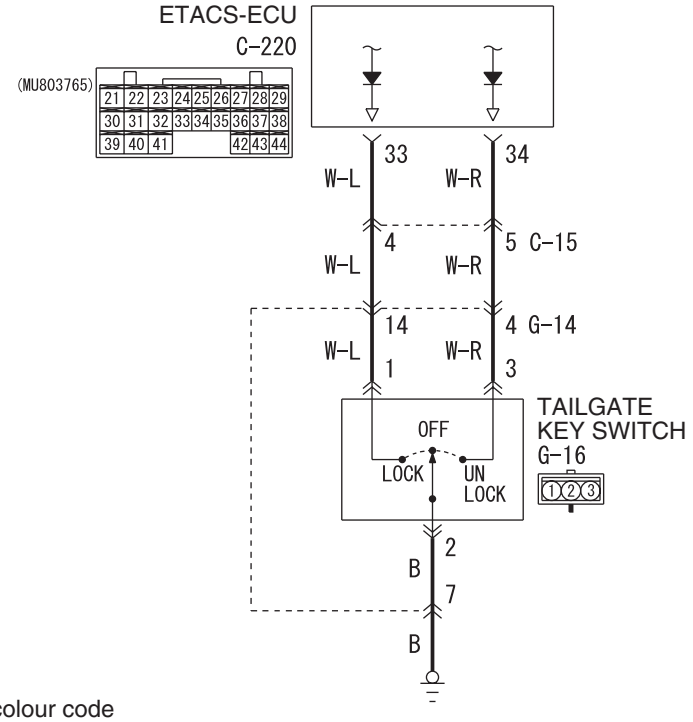

Wire colour code
B : Black LG : Light green G : Green L : Blue W : White Y : Yellow SB : Sky blue
BR : Brown O : Orange GR : Gray R : Red P : Pink V : Violet

W4X54X091A

COMMENTS ON TROUBLE SYMPTOM

Input signal from the tailgate key switch is used to operate the central door locking function. If the signal is abnormal, the central door locking function will not work normally.

POSSIBLE CAUSES

- Malfunction of the tailgate key switch
- Malfunction of the ETACS-ECU
- Damaged harness wires and connectors

DIAGNOSTIC PROCEDURE

Step 1. Connector check: G-16 tailgate key switch connector

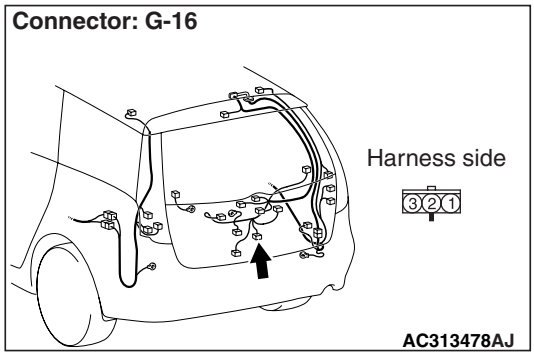

Q: Is the check result normal?
YES : Go to Step 2.
NO : Repair the defective connector.

Main Index
Group TOC

Step 2. Check the tailgate key switch.
Refer to GROUP 42 – Tailgate P.42-60.

Q: Is the check result normal?
YES : Go to Step 3.
NO : Replace the tailgate lock key switch.

Step 3. Resistance measurement at the G-16 tailgate key switch connector.

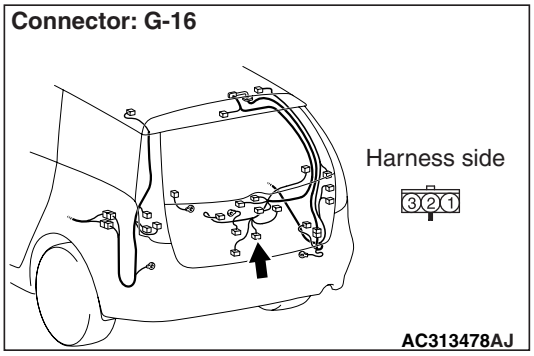

(1) Disconnect the connector, and measure at the wiring harness side.

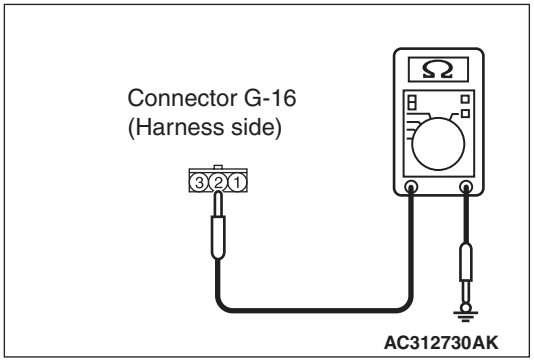

(2) Resistance between G-16 tailgate key switch connector terminal No.2 and body earth

OK: 2 Ω or less

Q: Is the check result normal?
YES : Go to Step 5.
NO : Go to Step 4.

Step 4. Check the wiring harness between G-16 tailgate key switch connector terminal No.2 and body earth.

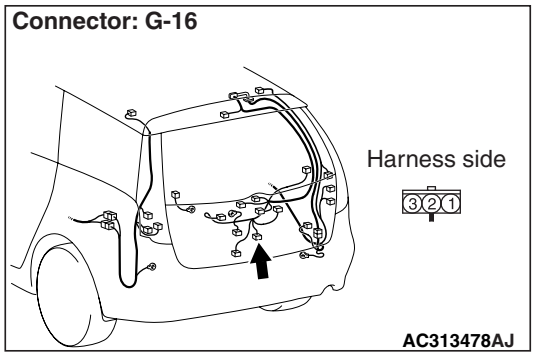

NOTE:

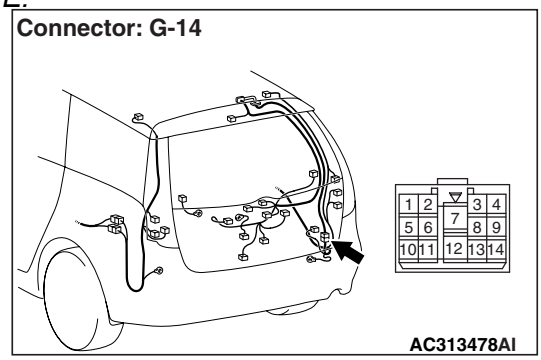

Prior to the wiring harness inspection, check intermediate connector G-14, and repair if necessary.

- Check the earth wires for open circuit.

Q: Is the check result normal?
YES : Intermittent malfunction. (Refer to GROUP 00 – How to Cope with Intermittent Malfunction P.00-5).
NO : Repair the wiring harness.

Main Index
Group TOC

Step 5. Connector check: C-220 ETACS-ECU connector

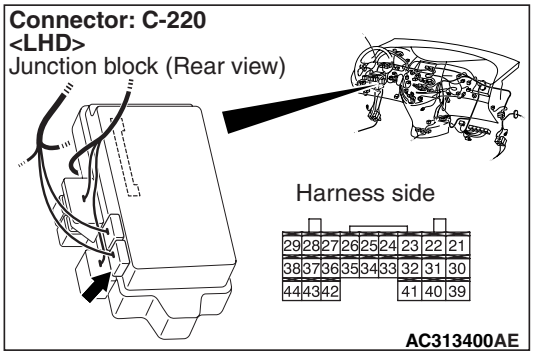

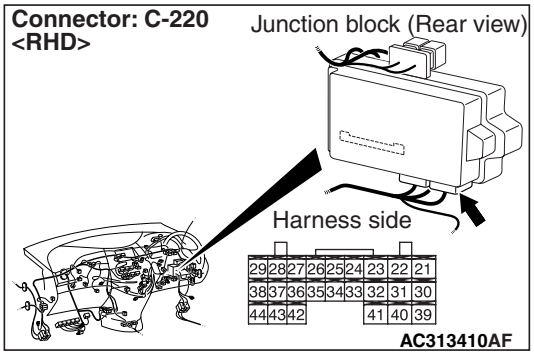

Q: Is the check result normal?

YES : Go to Step 6.

NO : Repair the defective connector.

Step 6. Check the wiring harness from G-16 tailgate key switch connector terminal Nos. 1 and 3 to C-220 ETACS-ECU connector terminal Nos. 33 and 34.

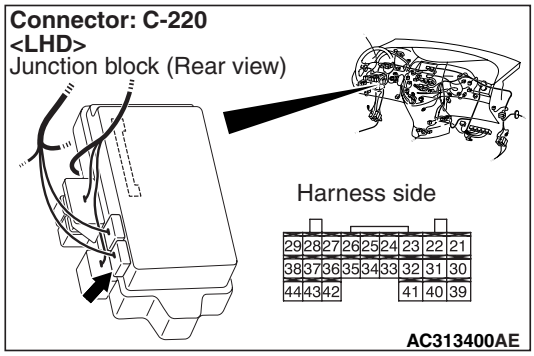

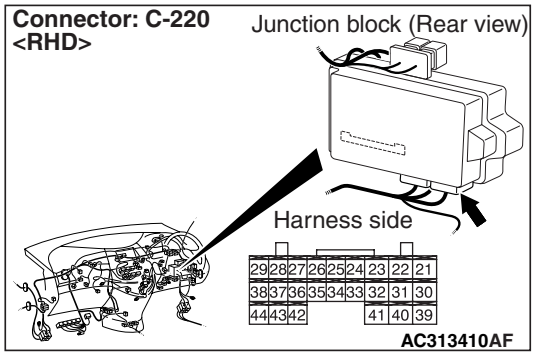

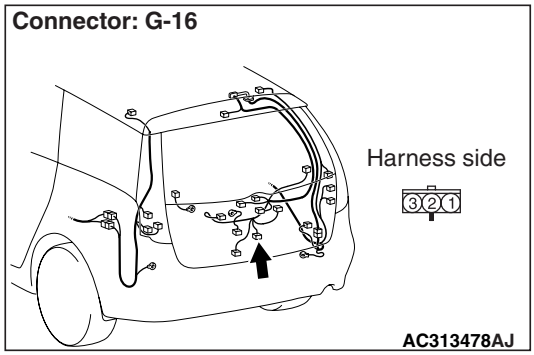

NOTE:

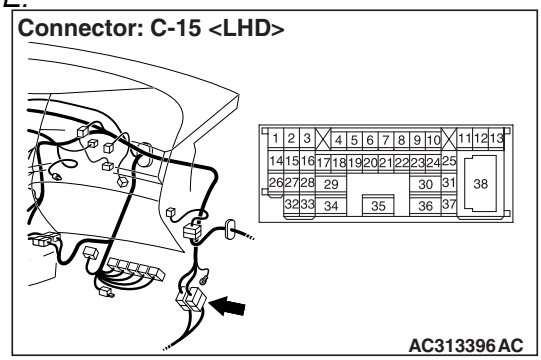

Main Index
Group TOC

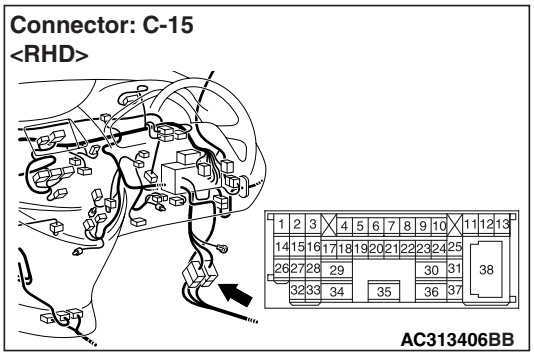

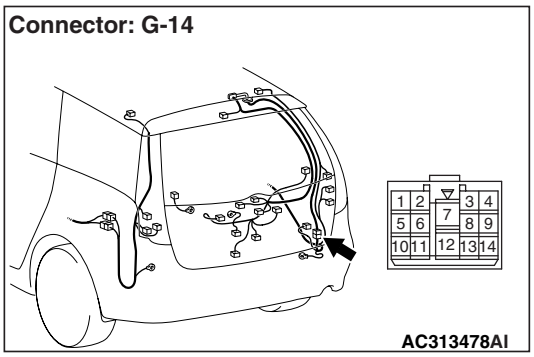

Prior to the wiring harness inspection, check intermediate connector C-15 and G-14, and repair if necessary.

- Check the input line for open circuit.

Q: Is the check result normal?

YES : . Go to Step 7.

NO : . Repair the wiring harness.

Step 7. Retest the system.

Check that the tailgate key switch signal is received normally.

Q: Is the check result normal?

YES : Intermittent malfunction. (Refer to GROUP 00 – How to Cope with Intermittent Malfunction P.00-5).

NO : Replace the ETACS-ECU.

Main Index
Group TOC

INSPECTION PROCEDURE P-16: The tailgate lock release handle signal is not received.

⚠ CAUTION
Whenever the ECU is replaced, ensure that the input signal circuit is normal.

Tailgate Lock Release Handle Input Circuit

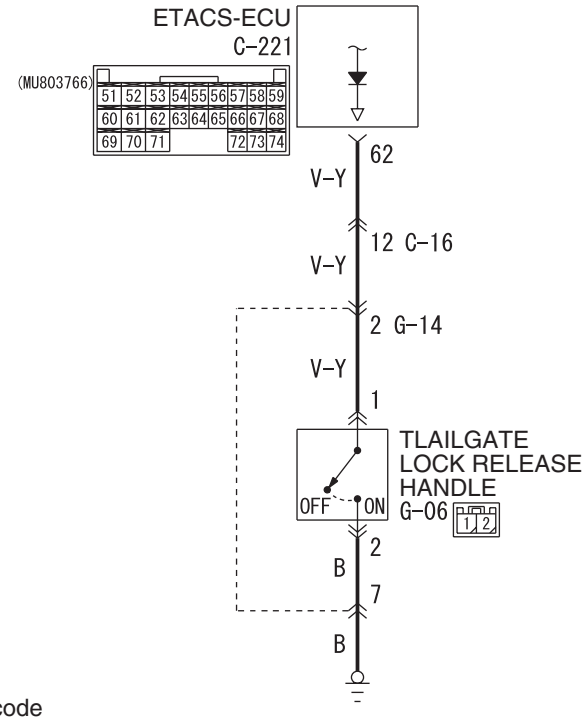

Wire colour code
B : Black LG : Light green G : Green L : Blue W : White Y : Yellow SB : Sky blue
BR : Brown O : Orange GR : Gray R : Red P : Pink V : Violet

W4X54E188A

COMMENTS ON TROUBLE SYMPTOM

Input signal from the tailgate lock release handle is used to operate the central door locking function. If the signal is abnormal, the central door locking function will not work normally.

POSSIBLE CAUSES

- Malfunction of the tailgate lock release handle
- Malfunction of the ETACS-ECU
- Damaged harness wires and connectors

DIAGNOSTIC PROCEDURE

Step 1. Connector check: G-06 Tailgate lock release handle connector

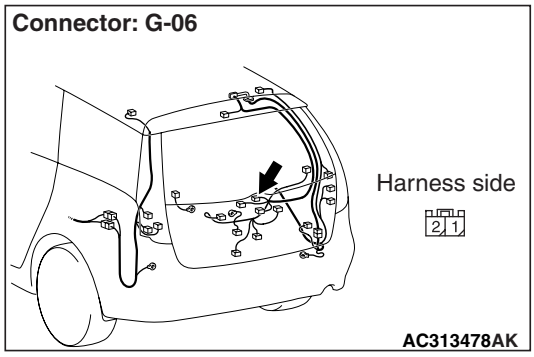

Q: Is the check result normal?
YES : Go to Step 2.
NO : Repair the defective connector.

Main Index
Group TOC

Step 2. Check the tailgate lock release handle.
Refer to GROUP 42 – Tailgate P.42-60.

Q: Is the check result normal?
YES : Go to Step 3.
NO : Replace the tailgate lock release handle.

Step 3. Measure the resistance at tailgate lock release handle connector G-06.

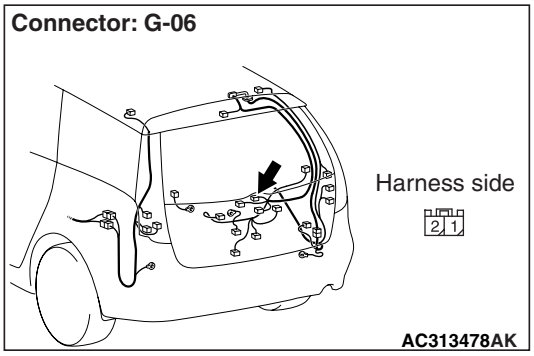

(1) Disconnect the connector, and measure at the wiring harness side.

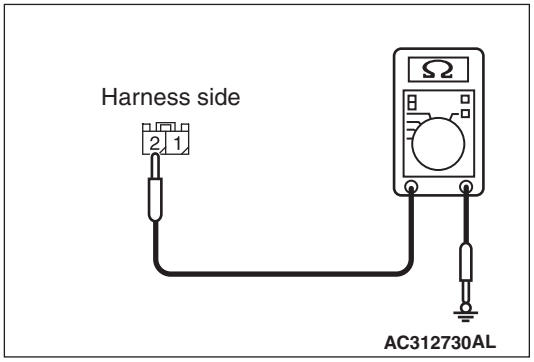

(2) Resistance between G-06 tailgate lock release handle connector No.2 and body earth.

OK: 2 Ω or less

Q: Is the check result normal?
YES : Go to Step 5.
NO : Go to Step 4.

Step 4. Check the wiring harness between tailgate lock release handle connector G-06 terminal No.2 and body earth.

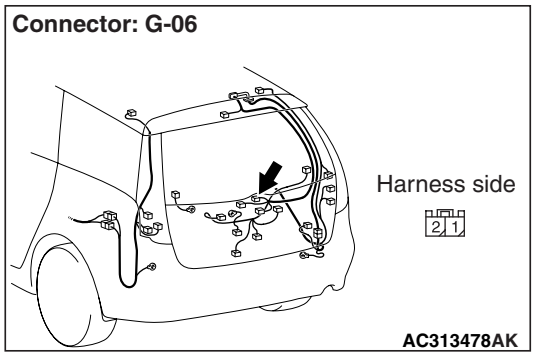

NOTE:

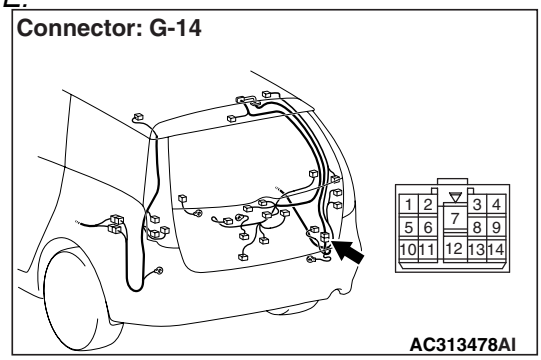

Prior to the wiring harness inspection, check intermediate connector G-14, and repair if necessary.

- Check the earth wires for open circuit.

Q: Is the check result normal?
YES : The trouble can be an intermittent malfunction (Refer to GROUP 00 – How to Cope with Intermittent Malfunction P.00-5).
NO : Repair the wiring harness.

Main Index
Group TOC

Step 5. Connector check: C-221 ETACS-ECU connector

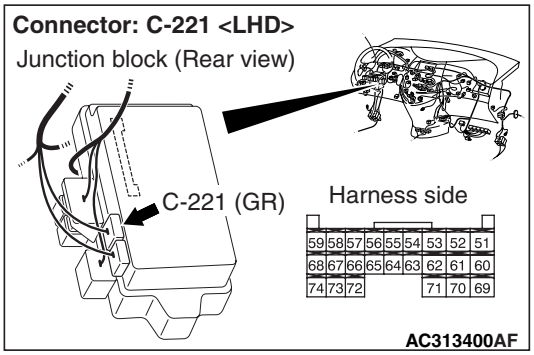

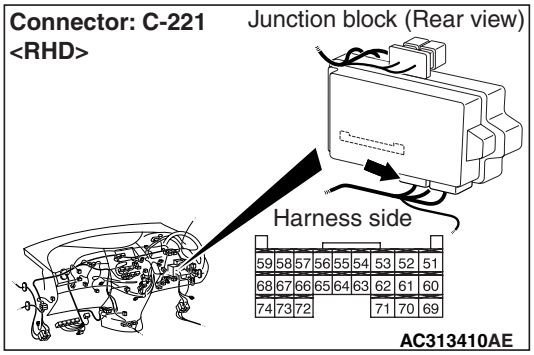

Q: Is the check result normal?

YES : Go to Step 6.

NO : Repair the defective connector.

Step 6. Check the wiring harness between ETACS-ECU connector C-221 terminal No.62 and tailgate lock release handle connector G-06 terminal No.1.

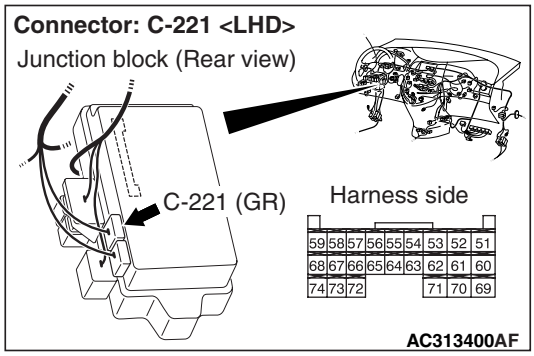

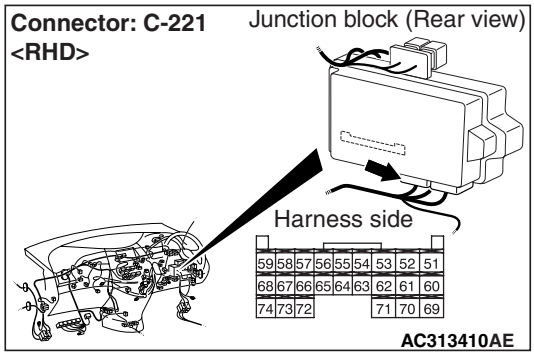

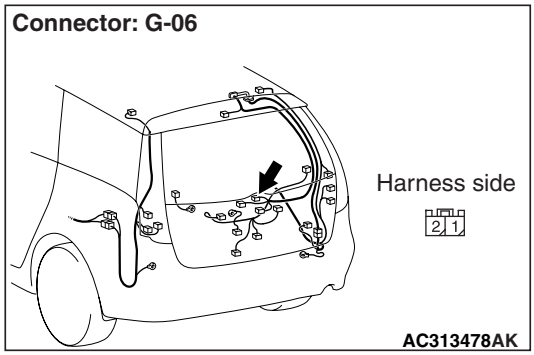

NOTE:

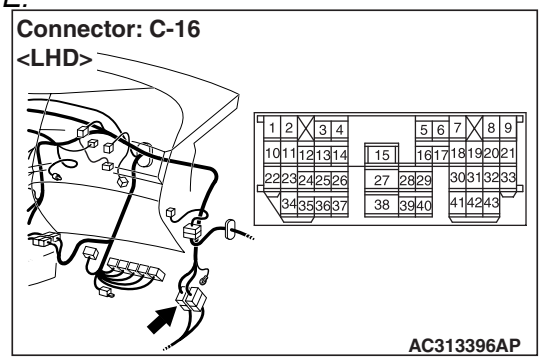

Main Index
Group TOC

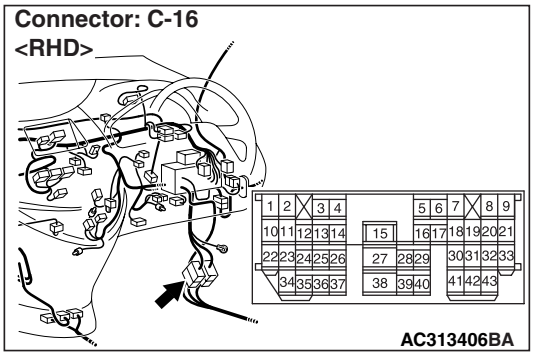

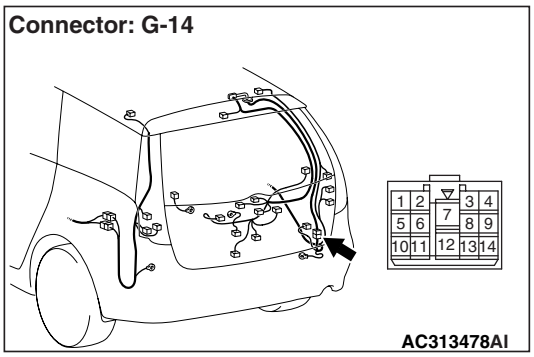

Prior to the wiring harness inspection, check intermediate connector C-16 and G-14, and repair if necessary.

- Check the input line for open circuit.

Q: Is the check result normal?

YES : . Go to Step 7.

NO : . Repair the wiring harness.

Step 7. Retest the system.

Check that the tail gate lock release handle switch signal is received normally.

Q: Is the check result normal?

YES : The trouble can be an intermittent malfunction (Refer to GROUP 00 – How to Cope with Intermittent Malfunction P.00-5).

NO : Replace the ETACS-ECU.

Main Index
Group TOC

INSPECTION PROCEDURE P-17: The driver's seat belt switch signal is not received. <L.H. drive vehicles>

⚠ CAUTION
Whenever the ECU is replaced, ensure that the input signal circuit is normal.

Driver's Seat Belt Switch Input Circuit <LHD>

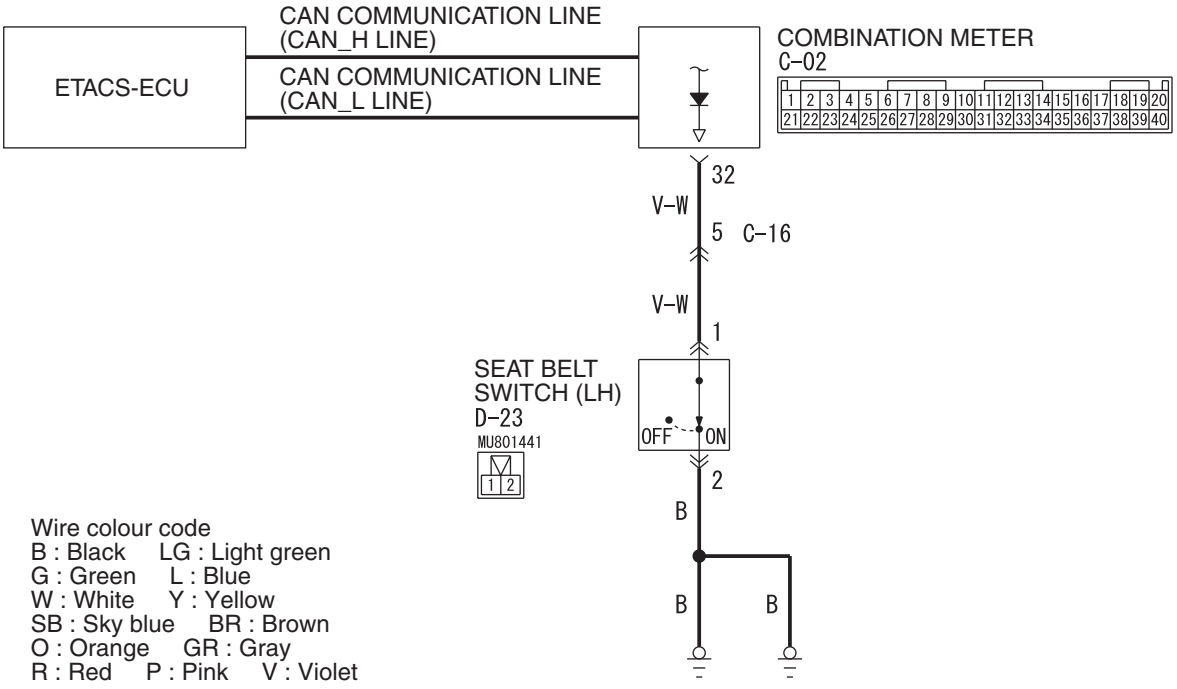

COMMENTS ON TROUBLE SYMPTOM

Input signal from the driver's seat belt switch signal is used to operate the seat belt warning buzzer function and seat belt warning lamp. If the signal is abnormal, the seat belt warning buzzer function and seat belt warning lamp will not work normally.

POSSIBLE CAUSES

- Malfunction of the driver's seat belt switch
- Malfunction of the ETACS-ECU
- Malfunction of the combination meter
- Damaged harness wires and connectors

DIAGNOSTIC PROCEDURE

Step 1. M.U.T.-III CAN bus diagnostics

Use the M.U.T.-III to diagnose the CAN bus lines.

Q: Is the check result normal?
YES : Go to Step 2.
NO : Repair the CAN bus line (Refer to GROUP 54F – Troubleshooting P.54F-13).

Step 2. M.U.T.-III diagnosis code

Check whether the combination meter-related diagnosis code is set.

Q: Is the diagnosis code set?
YES : Diagnose the combination meter (Refer to GROUP 54A – Combination meter P.54A-55).
NO : Go to Step 3.

Main Index
Group TOC

Step 3. Connector check: D-23 seat belt switch (LH) connector

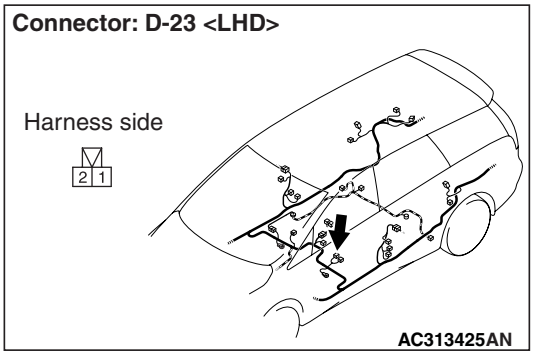

Q: Is the check result normal?
YES : Go to Step 4.
NO : Repair the defective connector.

Step 4. Check the seat belt switch (LH).
Refer to GROUP 52A – Front seat belt P.52A-38.

Q: Is the check result normal?
YES : Go to Step 5.
NO : Replace the inner seat belt (driver's side).

Step 5. Resistance measurement at the D-23 seat belt switch (LH) connector.

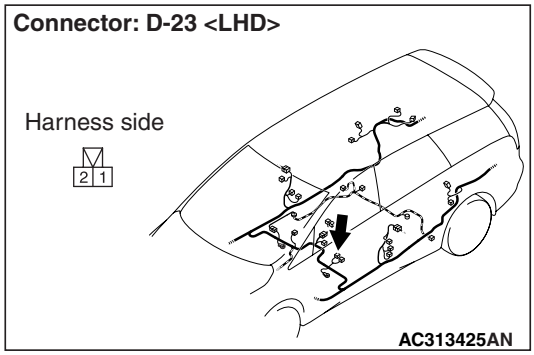

(1) Disconnect the connector, and measure at the wiring harness side.

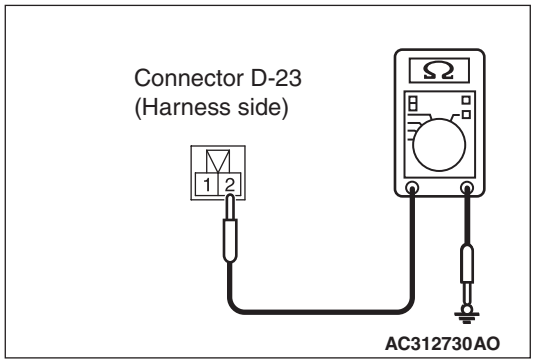

(2) Resistance between D-23 seat belt switch (LH) connector terminal No.2 and body earth

OK: 2 Ω or less

Q: Is the check result normal?
YES : Go to Step 7.
NO : Go to Step 6.

Step 6. Check the wiring harness between D-23 seat belt switch (LH) connector terminal No.2 and body earth.

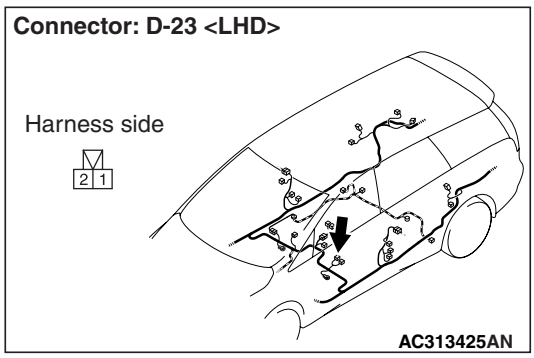

- Check the earth wires for open circuit.

Q: Is the check result normal?
YES : Replace the inner seat belt (driver's side).
NO : Repair the wiring harness.

Main Index
Group TOC

Step 7. Connector check: C-02 combination meter connector

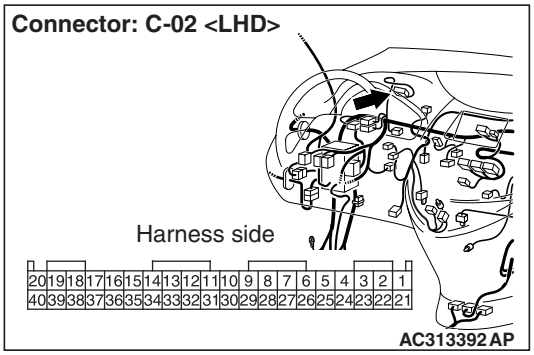

Q: Is the check result normal?
YES : Go to Step 8.
NO : Repair the defective connector.

Step 8. Check the wiring harness from D-23 seat belt switch (LH) terminal No.1 to C-02 combination meter connector terminal No.32.

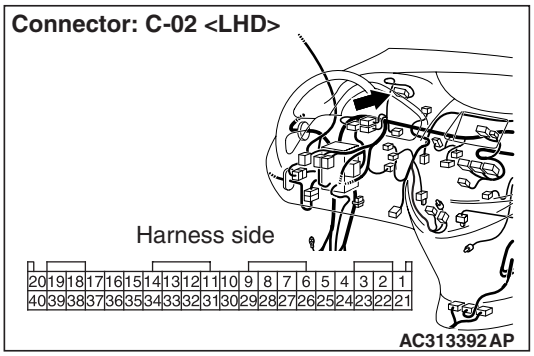

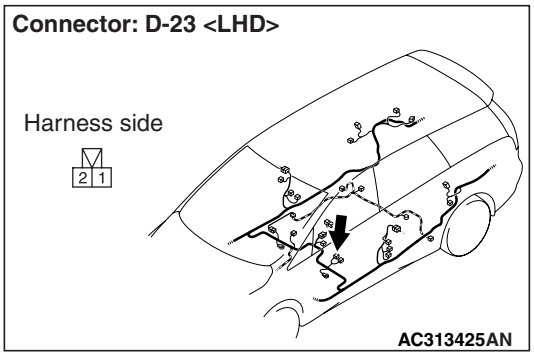

NOTE:

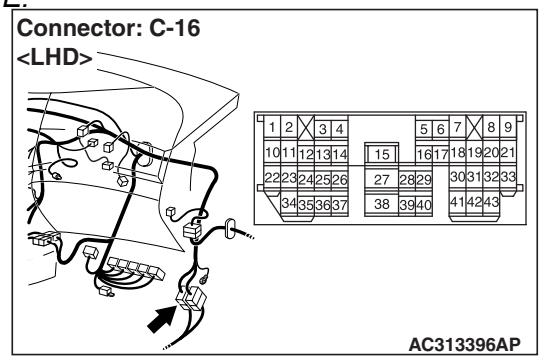

Prior to the wiring harness inspection, check intermediate connector C-16, and repair if necessary.

- Check the input line for open circuit.

Q: Is the check result normal?
YES : Go to Step 9.
NO : Repair the wiring harness.

Step 9. Retest the system.

After the ETACS-ECU is replaced, check that the driver's seat belt switch signal is received.

(1) Replace the ETACS-ECU.
(2) Check that the driver's seat belt switch signal is received.

Q: Is the check result normal?
YES : The trouble can be an intermittent malfunction (Refer to GROUP 00 – How to Cope with Intermittent Malfunction P.00-5).
NO : Replace the combination meter.

Main Index
Group TOC

INSPECTION PROCEDURE P-17: The driver's seat belt switch signal is not received. <RH drive vehicles>

⚠ CAUTION
Whenever the ECU is replaced, ensure that the input signal circuit is normal.

Driver's Seat Belt Switch Input Circuit <RHD>

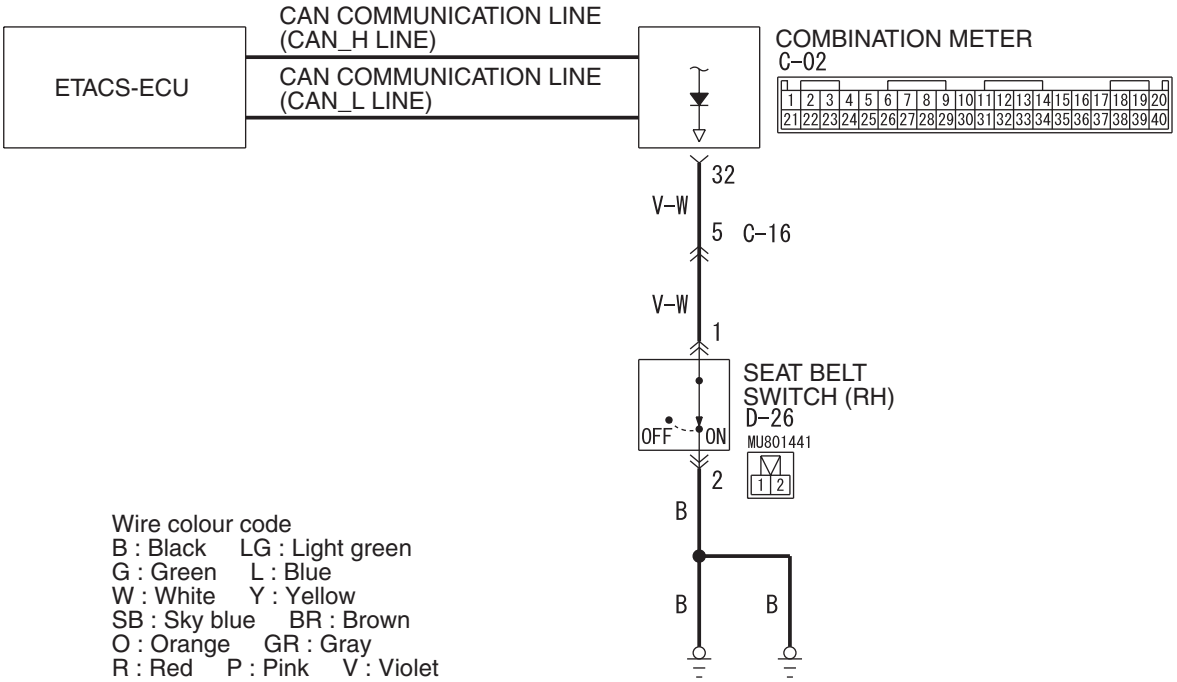

COMMENTS ON TROUBLE SYMPTOM

Input signal from the driver's seat belt switch signal is used to operate the seat belt warning buzzer function and seat belt warning lamp. If the signal is abnormal, the seat belt warning buzzer function and seat belt warning lamp will not work normally.

POSSIBLE CAUSES

- Malfunction of the driver's seat belt switch
- Malfunction of the ETACS-ECU
- Malfunction of the combination meter
- Damaged harness wires and connectors

DIAGNOSTIC PROCEDURE

Step 1. M.U.T.-III CAN bus diagnostics

Use the M.U.T.-III to diagnose the CAN bus lines.

Q: Is the check result normal?
YES : Go to Step 2.
NO : Repair the CAN bus line (Refer to GROUP 54F – Troubleshooting P.54F-13).

Step 2. M.U.T.-III diagnosis code

Check whether the combination meter-related diagnosis code is set.

Q: Is the diagnosis code set?
YES : Diagnose the combination meter (Refer to GROUP 54A – Combination meter P.54A-73).
NO : Go to Step 3.

Main Index
Group TOC

Step 3. Connector check: D-26 seat belt switch (RH) connector

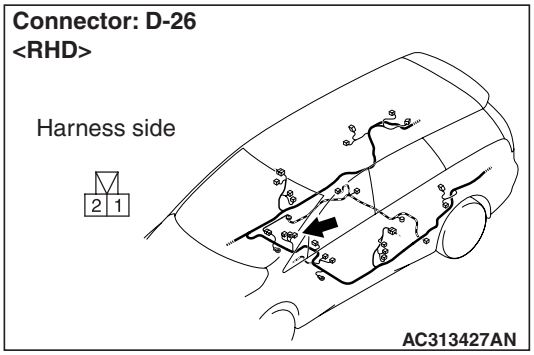

Q: Is the check result normal?
YES : Go to Step 4.
NO : Repair the defective connector.

Step 4. Check the seat belt switch (RH).
Refer to GROUP 52A – Front seat belt P.52A-38.

Q: Is the check result normal?
YES : Go to Step 5.
NO : Replace the inner seat belt (driver's side).

Step 5. Resistance measurement at the D-26 seat belt switch (RH) connector.

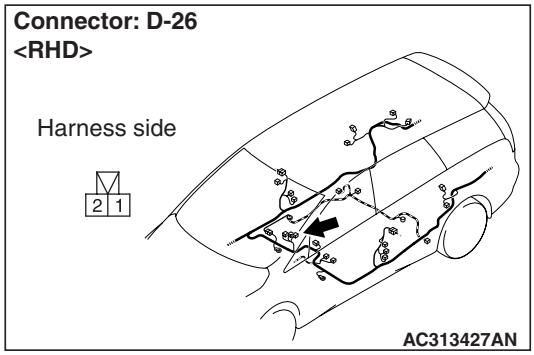

(1) Disconnect the connector, and measure at the wiring harness side.

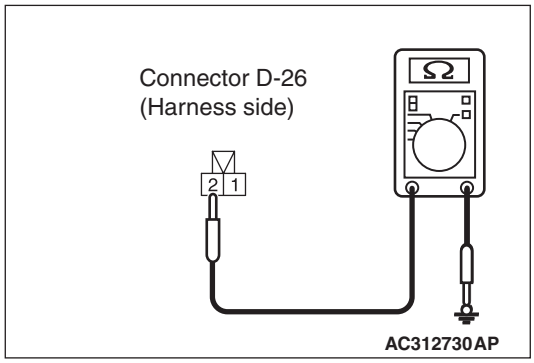

(2) Resistance between D-26 seat belt switch (RH) connector terminal No.2 and body earth

OK: 2 Ω or less

Q: Is the check result normal?
YES : Go to Step 7.
NO : Go to Step 6.

Step 6. Check the wiring harness between D-26 seat belt switch (RH) connector terminal No.2 and body earth.

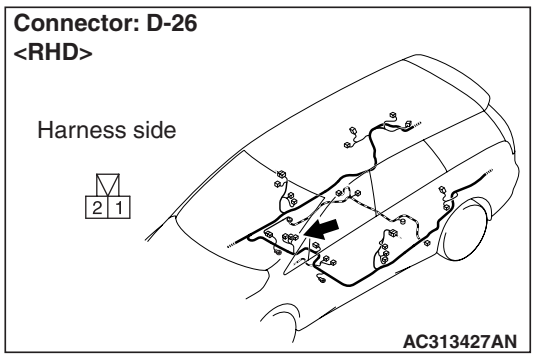

- Check the earth wires for open circuit.

Q: Is the check result normal?
YES : Replace the inner seat belt (driver's side).
NO : Repair the wiring harness.

Main Index
Group TOC

Step 7. Connector check: C-02 combination meter connector

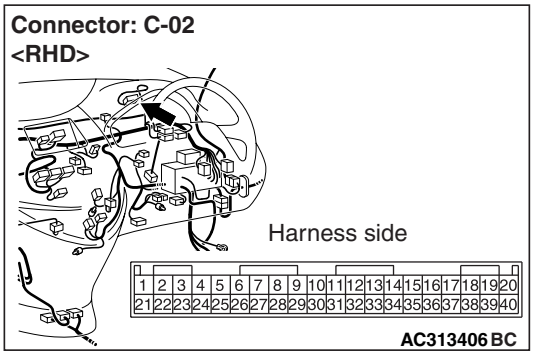

Q: Is the check result normal?
YES : Go to Step 8.
NO : Repair the defective connector.

Step 8. Check the wiring harness from D-26 seat belt switch (RH) terminal No.1 to C-02 combination meter connector terminal No.32.

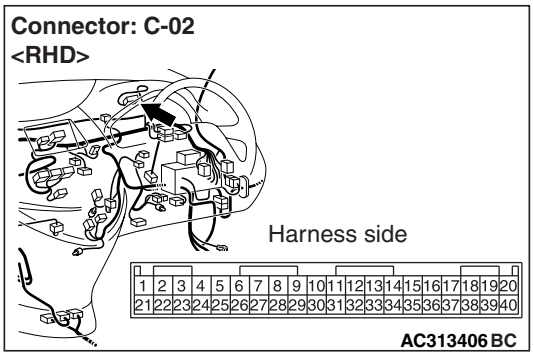

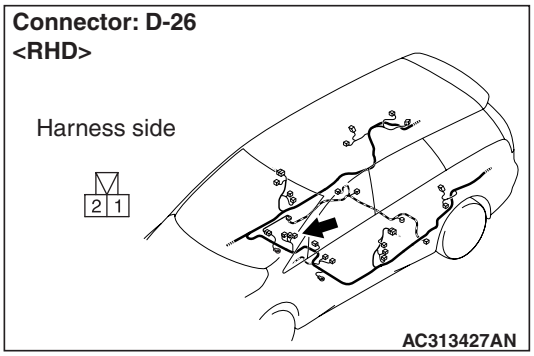

NOTE:

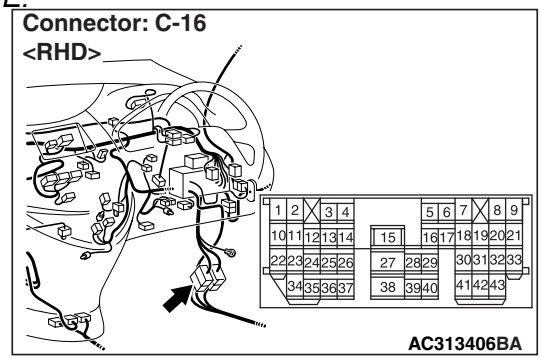

Prior to the wiring harness inspection, check intermediate connector C-16, and repair if necessary.

- Check the input line for open circuit.

Q: Is the check result normal?
YES : Go to Step 9.
NO : Repair the wiring harness.

Step 9. Retest the system.

After the ETACS-ECU is replaced, check that the driver's seat belt switch signal is received.

(1) Replace the ETACS-ECU.
(2) Check that the driver's seat belt switch signal is received.

Q: Is the check result normal?
YES : The trouble can be an intermittent malfunction (Refer to GROUP 00 – How to Cope with Intermittent Malfunction P.00-5).
NO : Replace the combination meter.

Main Index
Group TOC

INSPECTION PROCEDURE P-18: The front passenger's seat belt switch signal is not received. <Vehicles for Australia and New Zealand>

⚠ CAUTION
Whenever the ECU is replaced, ensure that the input signal circuit is normal.

Passenger's Seat Belt Switch Input Circuit

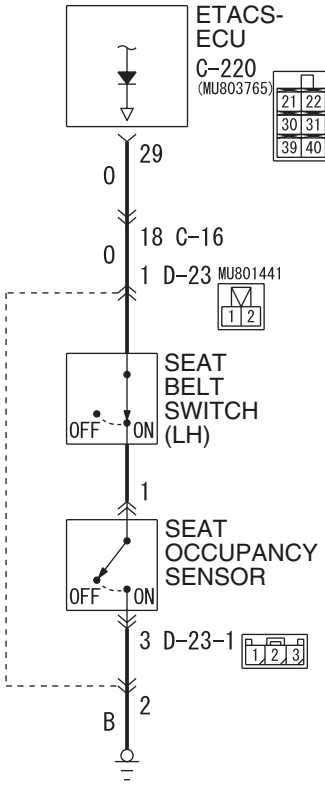

Wire colour code
B : Black LG : Light green G : Green L : Blue W : White Y : Yellow SB : Sky blue
BR : Brown O : Orange GR : Gray R : Red P : Pink V : Violet

W4X54X092A

COMMENTS ON TROUBLE SYMPTOM

Input signal from the passenger's seat belt switch is used to operate the seat belt warning buzzer function and seat belt warning lamp. If the signal is abnormal, the seat belt warning buzzer function and seat belt warning lamp will not work normally.

POSSIBLE CAUSES

- Malfunction of the passenger's seat belt switch
- Malfunction of the seat occupancy sensor
- Malfunction of the ETACS-ECU
- Damaged harness wires and connectors

Main Index
Group TOC

DIAGNOSTIC PROCEDURE

Step 1. Connector check: D-23 seat belt switch (LH) connector

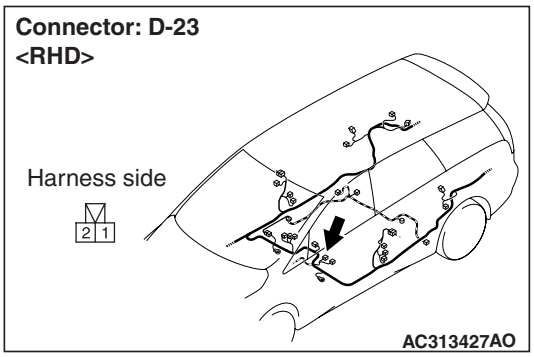

Q: Is the check result normal?
YES : Go to Step 2.
NO : Repair the defective connector.

Step 2. Check the seat belt switch (LH).

Refer to GROUP 52A – Front seat belt P.52A-38.

Q: Is the check result normal?
YES : Go to Step 3.
NO : Replace the inner seat belt (front passenger's side).

Step 3. Connector check: D-23-1 seat occupancy sensor connector

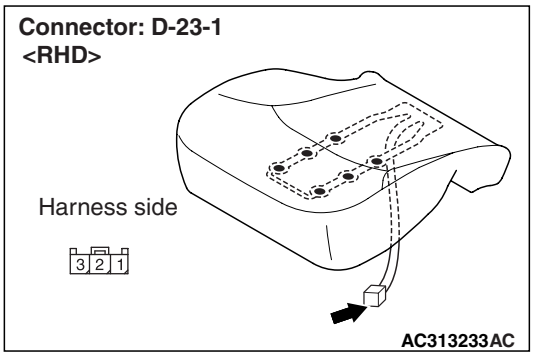

Q: Is the check result normal?
YES : Go to Step 4.
NO : Repair the defective connector.

Step 4. Check the seat occupancy sensor.

Refer to GROUP 52A – Front seat P.52A-22.

Q: Is the check result normal?
YES : Go to Step 5.
NO : Replace the seat occupancy sensor.

Step 5. Measure the resistance at the D-23-1 seat occupancy sensor connector.

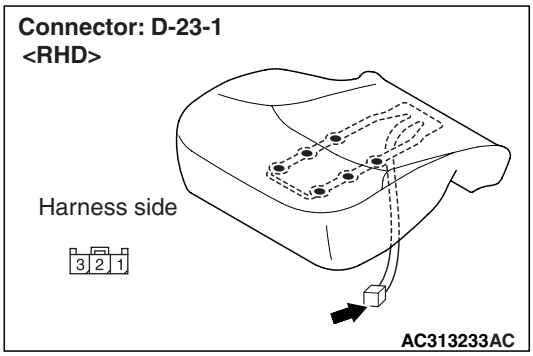

(1) Disconnect the connector, and measure at the wiring harness side.

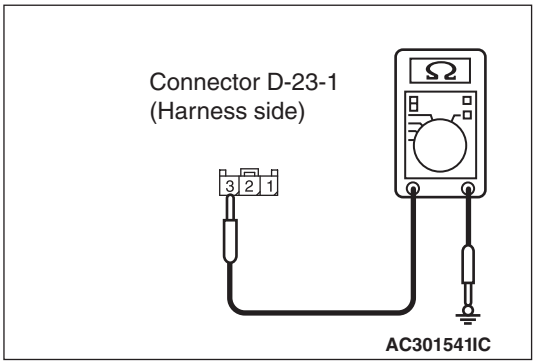

(2) Resistance between D-23-1 seat occupancy sensor connector terminal No.3 and body earth

OK: 2 Ω or less

Q: Is the check result normal?
YES : Go to Step 7.
NO : Go to Step 6.

Step 6. Check the wiring harness between D-23-1 seat occupancy sensor connector terminal No.3 and body earth.

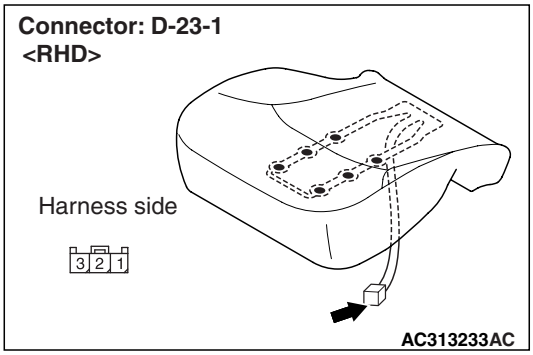

- Check the earth wires for open circuit.

Q: Is the check result normal?
YES : Replace the inner seat belt (front passenger's side).
NO : Repair the wiring harness.

Main Index
Group TOC

Step 7. Connector check: C-220 ETACS-ECU connector

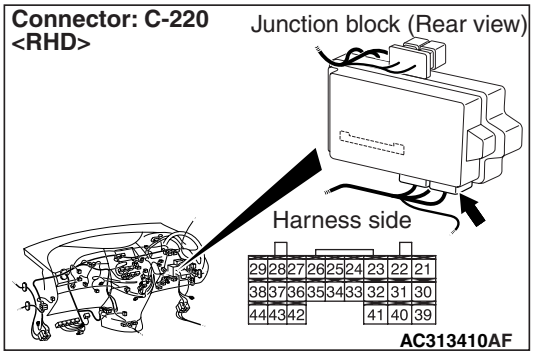

Q: Is the check result normal?
YES : Go to Step 8.
NO : Repair the defective connector.

Step 8. Check the wiring harness from D-23-1 seat occupancy sensor connector terminal No.1 to C-220 ETACS-ECU connector terminal No.29.

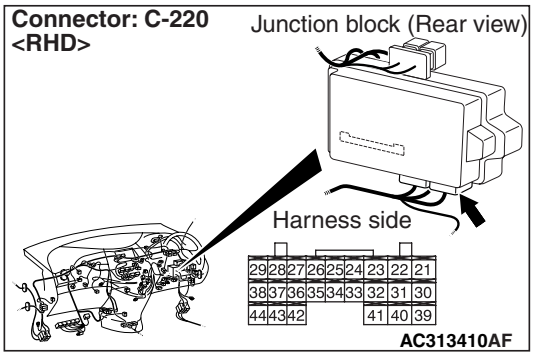

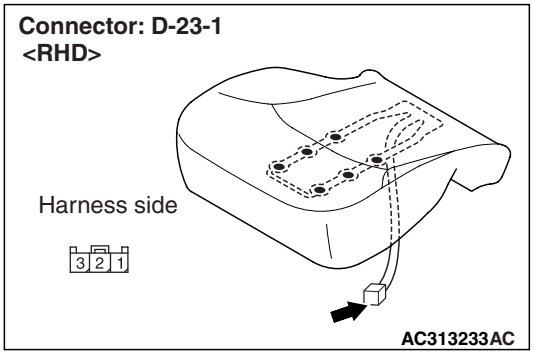

NOTE:

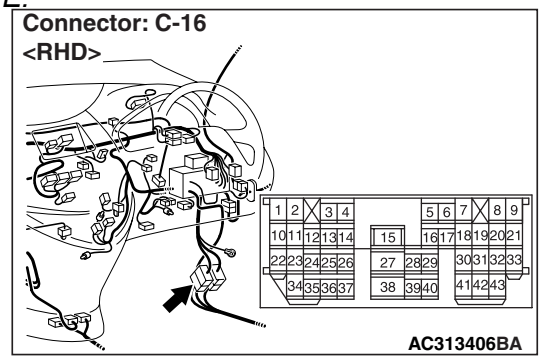

Prior to the wiring harness inspection, check intermediate connector C-16, and repair if necessary.

- Check the input line for open circuit.

Q: Is the check result normal?
YES : Go to Step 9.
NO : Repair the wiring harness or replace the inner seat belt (front passenger's side).

Step 9. Retest the system.

Check that the passenger's seat belt switch signal is received normally.

Q: Is the check result normal?
YES : Intermittent malfunction. (Refer to GROUP 00 – How to Cope with Intermittent Malfunction P.00-5).
NO : Replace the ETACS-ECU.

Main Index
Group TOC

Inspection Procedure P-19: Signal is not received from the electric remote controlled mirror switch (folding/unfolding switch).

⚠ CAUTION
Whenever the ECU is replaced, ensure that the input signal circuit is normal.

Remote Controlled Mirror Switch Input Circuit

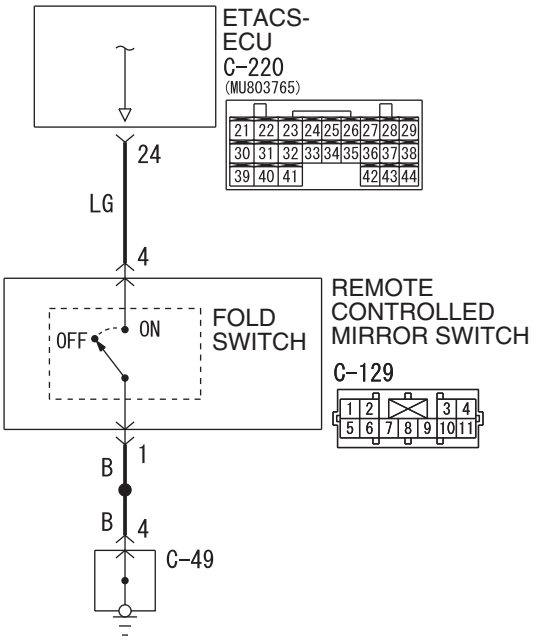

Wire colour code
B : Black LG : Light green G : Green L : Blue W : White Y : Yellow SB : Sky blue
BR : Brown O : Orange GR : Grey R : Red P : Pink V : Violet PU : Purple

W6X54X024A

COMMENTS ON TROUBLE SYMPTOM

The electric-folding door mirrors work in accordance with the input signal from the electric remote controlled mirror switch. If the input signal is abnormal, the door mirrors will not work normally.

POSSIBLE CAUSES

- Malfunction of the electric remote controlled mirror switch
- Malfunction of the ETACS-ECU
- Damaged harness wires and connectors

Main Index
Group TOC

DIAGNOSTIC PROCEDURE

Step 1. Connector check: C-129 electric remote controlled mirror switch connector

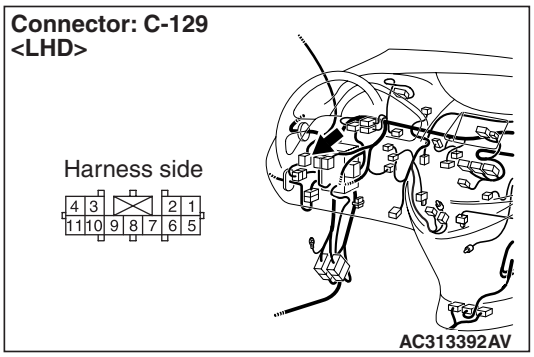

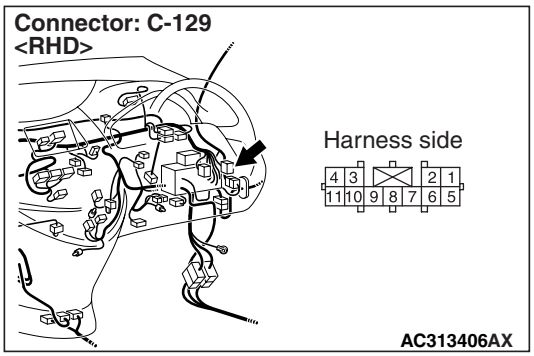

Q: Is the check result normal?
YES : Go to Step 2.
NO : Repair the connector.

Step 2. Check the electric remote controlled mirror switch.

Refer to GROUP 51 – Door mirror P.51-38.

Q: Is the check result normal?
YES : Go to Step 3.
NO : Replace the electric remote controlled mirror switch.

Step 3. Measure the resistance at the C-129 electric remote controlled mirror switch connector.

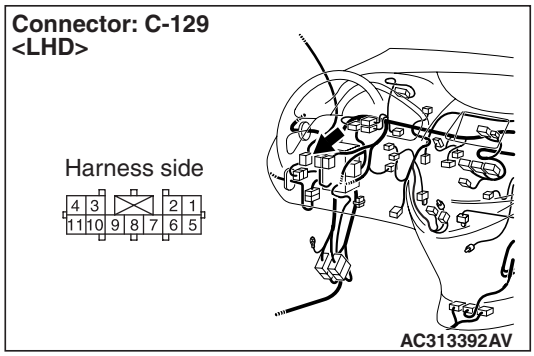

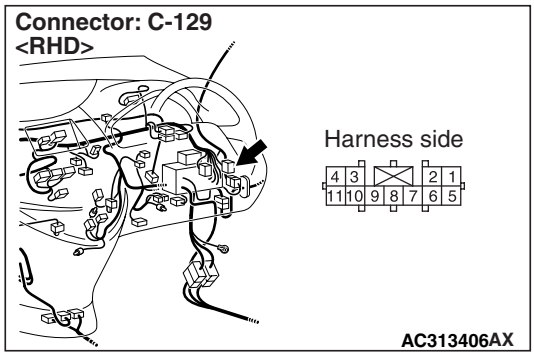

(1) Disconnect the connector, and measure at the wiring harness side.

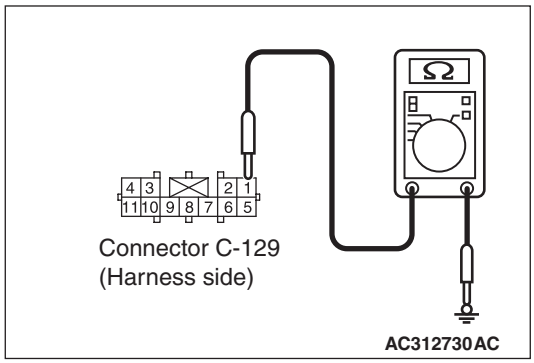

(2) Continuity between C-129 electric remote controlled mirror switch connector terminal No.1 and body earth

OK: 2Ω or less

Q: Is the check result normal?
YES : Go to Step 6.
NO : Go to Step 4.

Main Index
Group TOC

Step 4. Connector check: C-49 earth connector

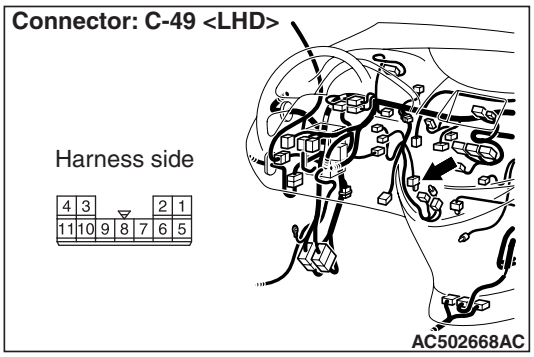

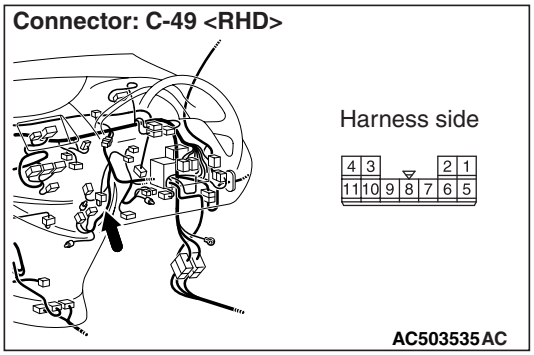

Q: Is the check result normal?
YES : Go to Step 5.
NO : Repair the connector.

Step 5. Check the wiring harness between C-129 electric remote controlled mirror switch connector terminal No.1 and C-49 earth connector terminal No.4.

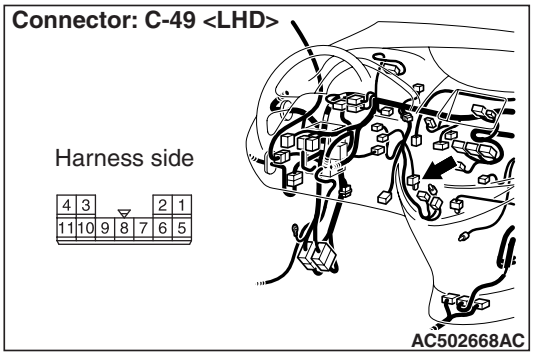

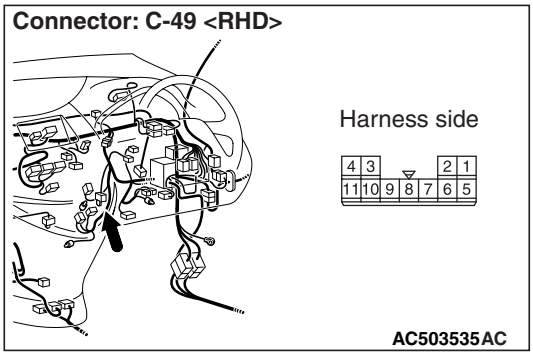

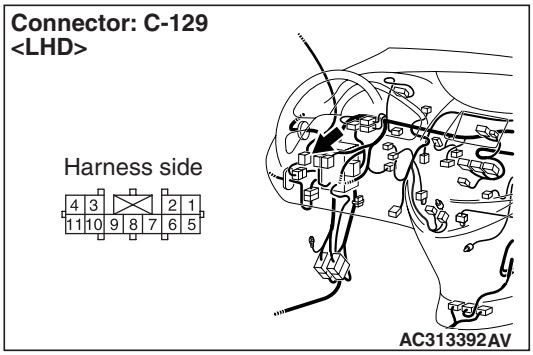

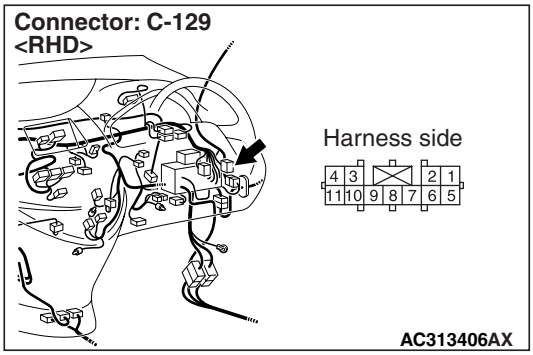

- Check the earth wires for open circuit.

Q: Is the check result normal?
YES : The trouble can be an intermittent malfunction (Refer to GROUP 00 – How to Cope with Intermittent Malfunction P.00-5).
NO : Repair the wiring harness.

Main Index
Group TOC

Step 6. Connector check: C-220 ETACS-ECU connector

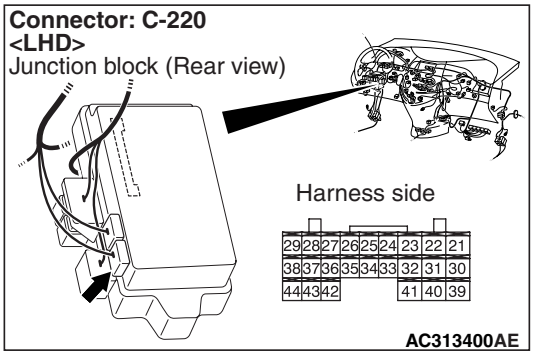

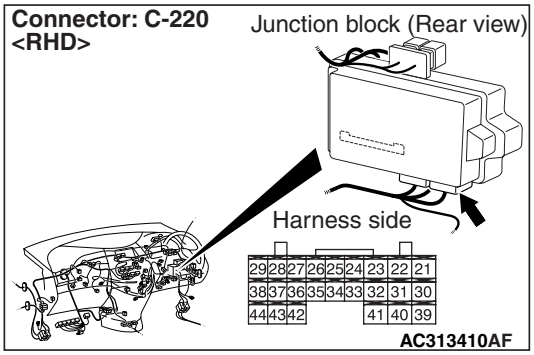

Q: Is the check result normal?
YES : Go to Step 7.
NO : Repair the connector.

Step 7. Check the wiring harness between C-129 electric remote controlled mirror switch connector terminal No.4 and C-220 ETACS-ECU connector terminal No.24.

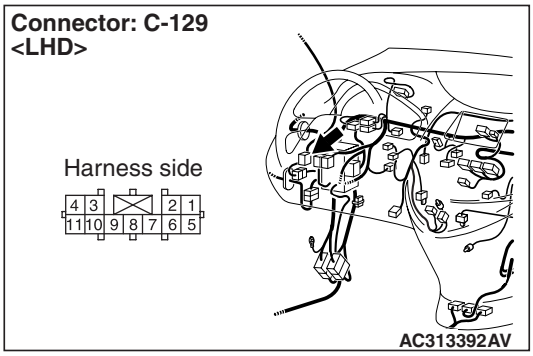

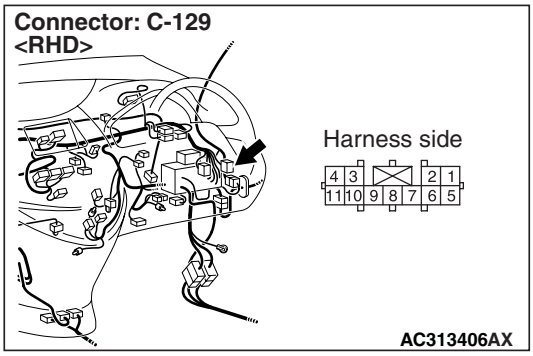

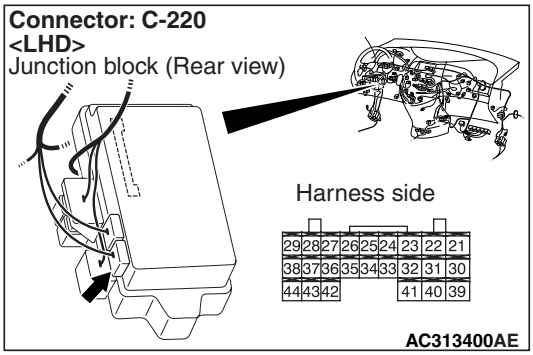

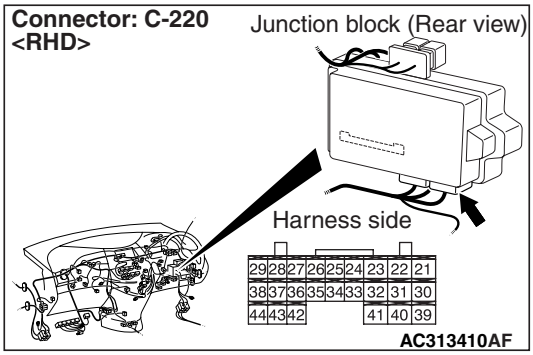

- Check the input line for open circuit.

Q: Is the check result normal?
YES : Go to Step 8.
NO : Repair the wiring harness.

Main Index
Group TOC

Step 8. Retest the system.
Check that the electric remote controlled mirror switch signal is received normally.

Q: Is the check result normal?
YES : The trouble can be an intermittent malfunction (Refer to GROUP 00 – How to Cope with Intermittent Malfunction P.00-5).
NO : Replace the ETACS-ECU.

Inspection Procedure P-20: The interior lamp "all on" or "all off" switch signal is not sent to the ETACS-ECU.

⚠ CAUTION
Whenever the ECU is replaced, ensure that the input signal circuit is normal.

Interior Lamp Input Circuit

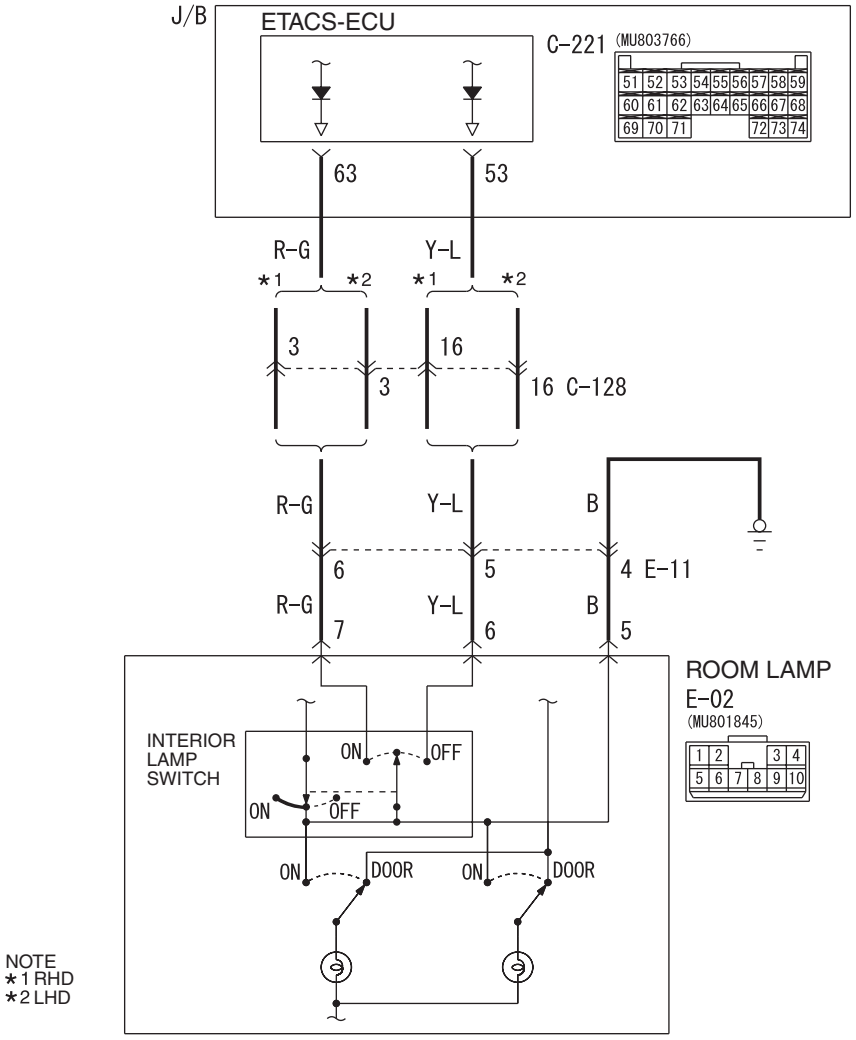

Wire colour code
B : Black LG : Light green G : Green L : Blue W : White Y : Yellow SB : Sky blue
BR : Brown O : Orange GR : Gray R : Red P : Pink V : Violet

W4X54E169A

Main Index
Group TOC

COMMENTS ON TROUBLE SYMPTOM

Input signals from the interior lamp "ON" and "OFF" switch are used to operate the interior lamps (room lamp, rear personal lamp, luggage compartment lamp, door lamps and key illumination lamp). If the signals are abnormal, the interior lamps will not illuminate and extinguish normally.

POSSIBLE CAUSES

- Malfunction of the room lamp (interior lamp switch)
- Malfunction of the ETACS-ECU
- Damaged harness wires and connectors

DIAGNOSTIC PROCEDURE

Step 1. Connector check: E-02 room lamp connector

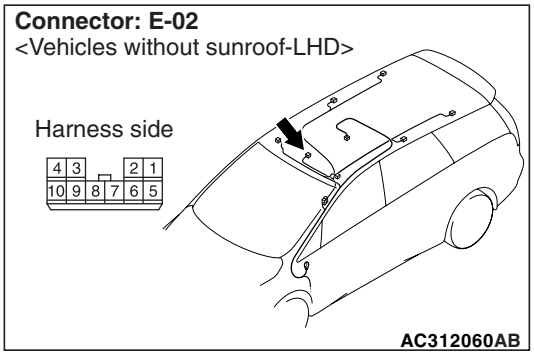

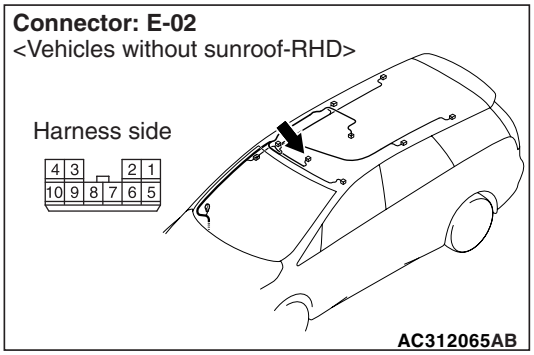

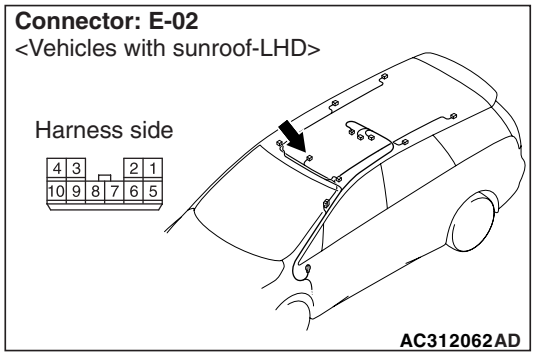

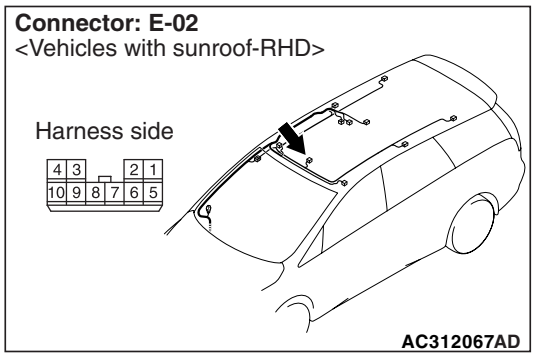

Q: Is the check result normal?
YES : Go to Step 2.
NO : Repair the connector.

Step 2. Check the Check the room lamp.

Refer to GROUP 54A – Room lamp P.54A-151.

Q: Is the check result normal?
YES : Go to Step 3.
NO : Replace the room lamp.

Step 3. Resistance measurement at the E-02 room lamp connector.

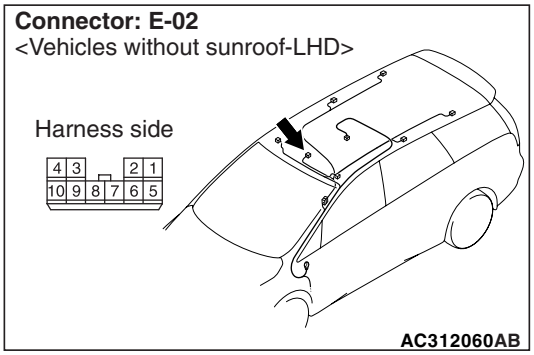

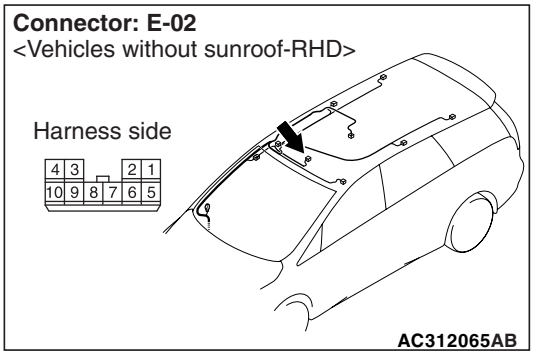

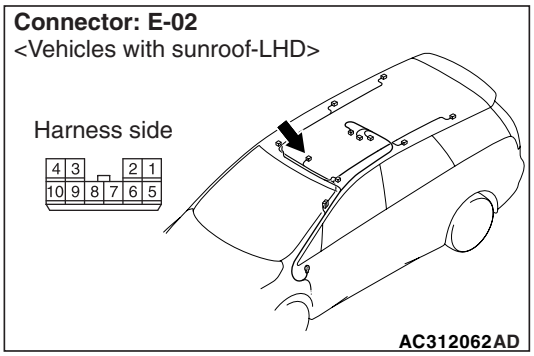

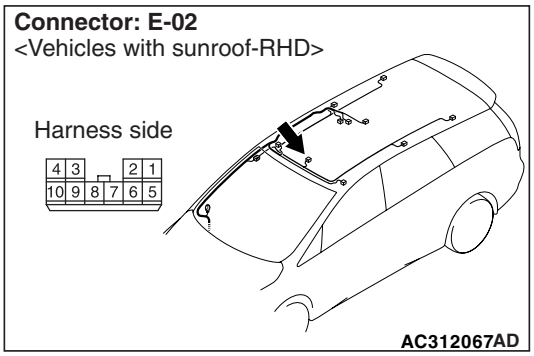

(1) Disconnect the connector, and measure at the wiring harness side.

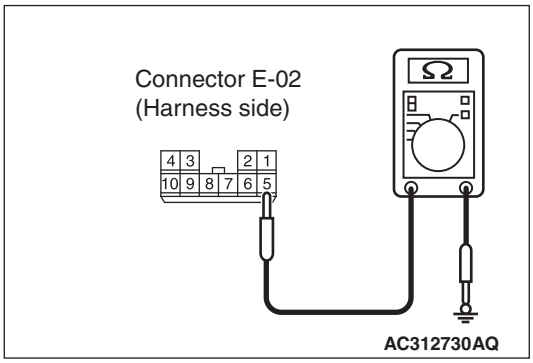

(2) Resistance between E-02 room lamp connector terminal No.5 and body earth

OK: 2Ω or less

Q: Is the check result normal?

YES : Go to Step 5.

NO : Go to Step 4.

Main Index
Group TOC

Step 4. Check the wiring harness between E-02 room lamp connector terminal No.5 and body earth

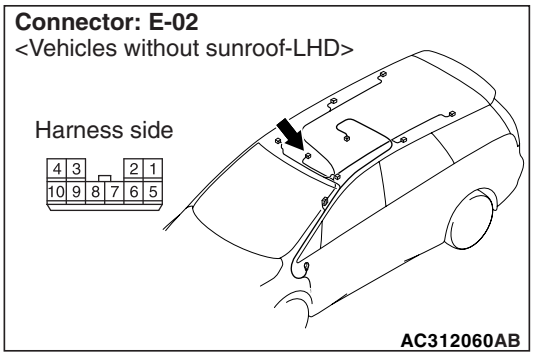

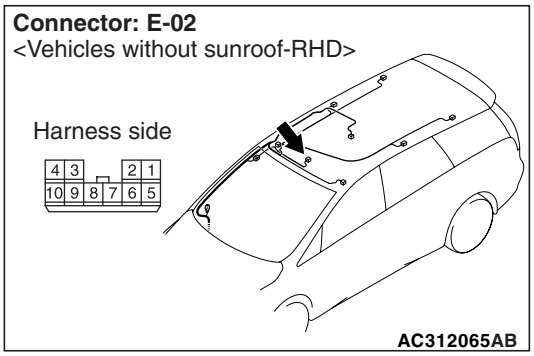

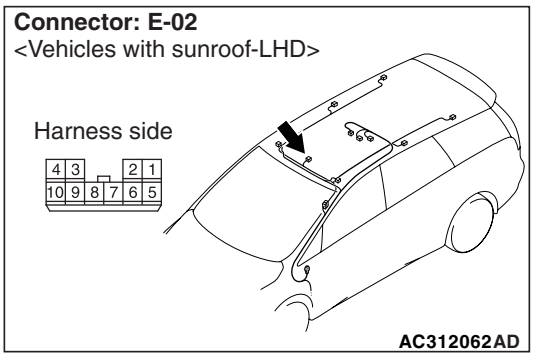

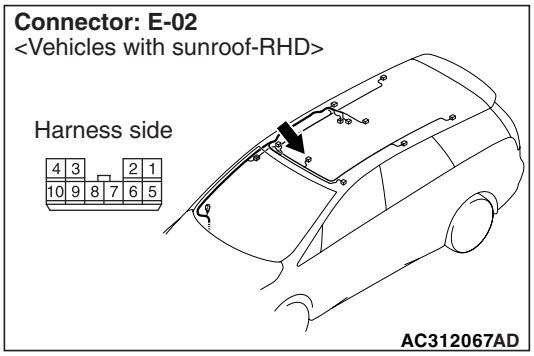

NOTE:

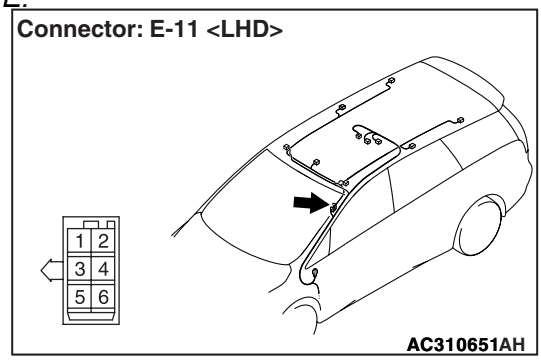

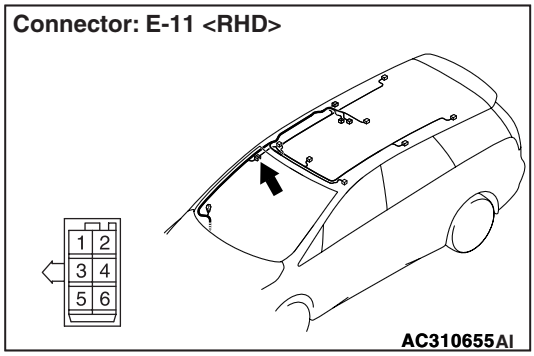

Prior to the wiring harness inspection, check intermediate connector E-11, and repair if necessary.

- Check the earth wires for open circuit.

Q: Is the check result normal?

YES : The trouble can be an intermittent malfunction (Refer to GROUP 00 – How to Cope with Intermittent Malfunction P.00-5).

NO : Repair the wiring harness.

Main Index
Group TOC

Step 5. Connector check: C-221 ETACS-ECU connector

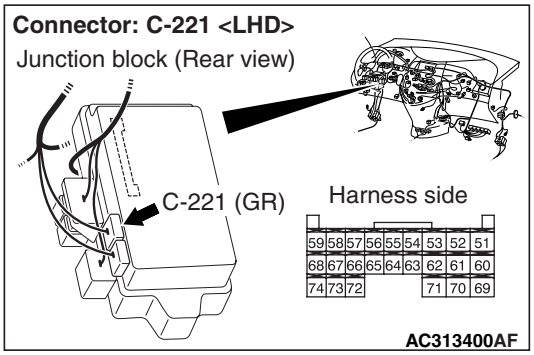

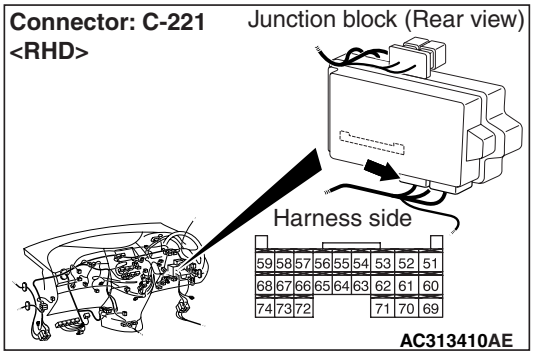

Q: Is the check result normal?

YES : Go to Step 6.

NO : Repair the defective connector.

Step 6. Check the wiring harness from E-02 room lamp connector terminal Nos. 6 and 7 to C-221 ETACS-ECU connector terminal Nos. 53 and 63.

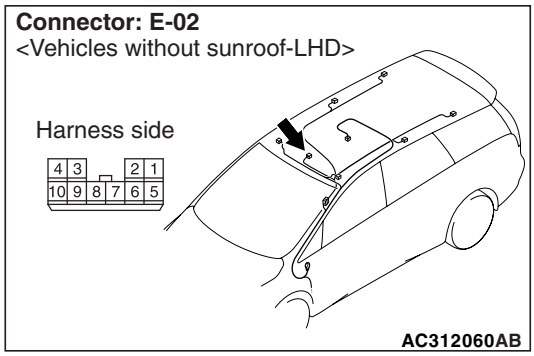

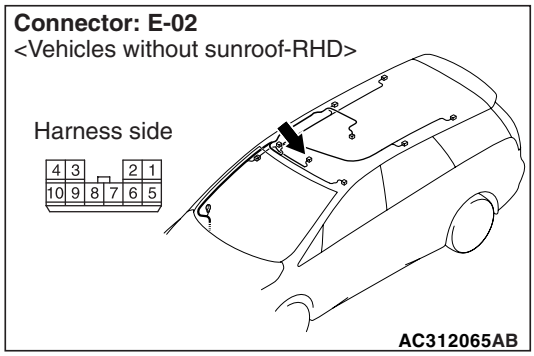

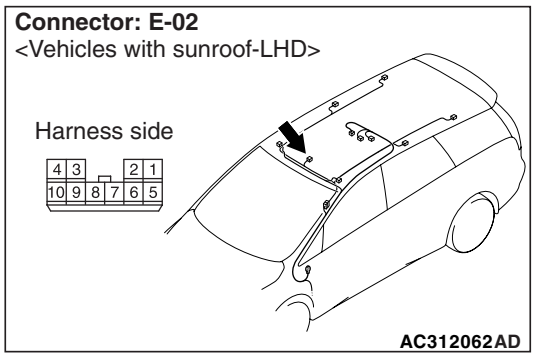

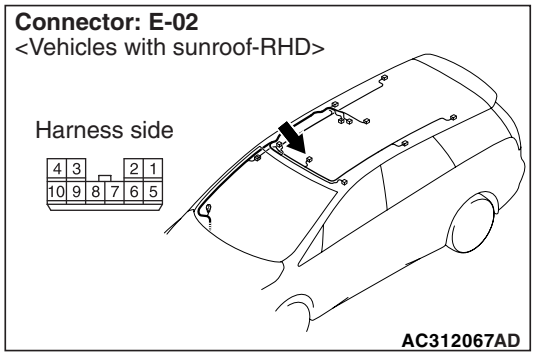

Main Index
Group TOC

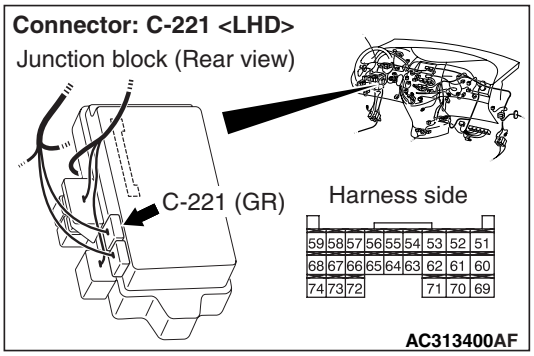

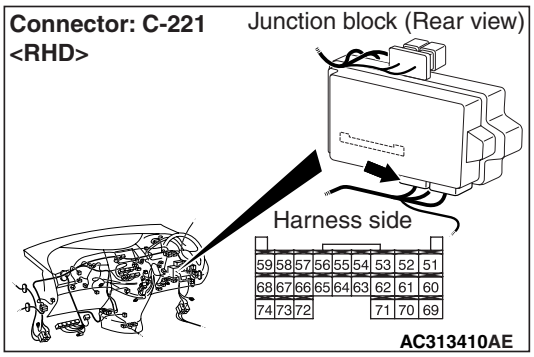

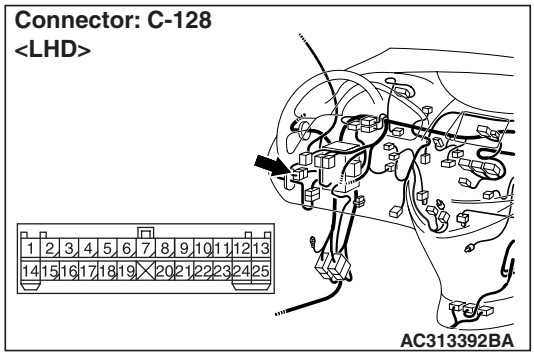

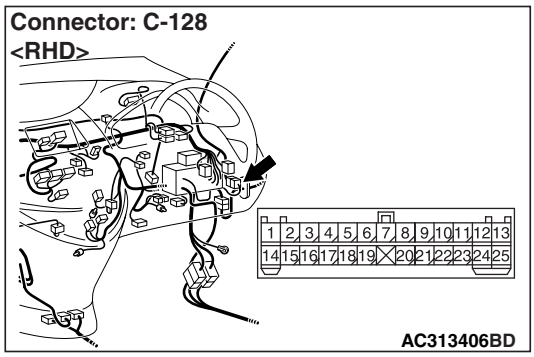

NOTE:

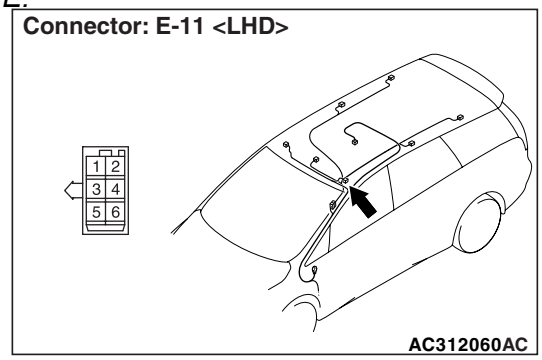

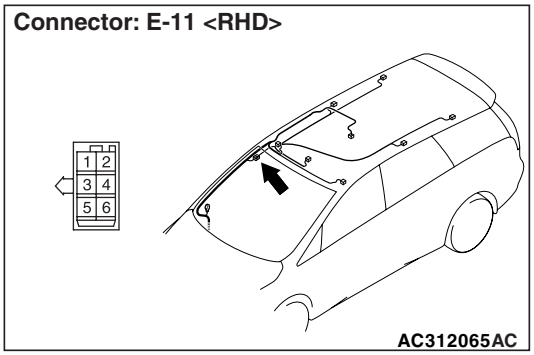

Prior to the wiring harness inspection, check intermediate connector E-11 and C-128, and repair if necessary.

- Check the input line for open circuit.

Q: Is the check result normal?

YES : Go to Step 7.

NO : Repair the wiring harness.

Step 7. Retest the system.

Check that the room lamp signal is received normally.

Q: Is the check result normal?

YES : The trouble can be an intermittent malfunction (Refer to GROUP 00 – How to Cope with Intermittent Malfunction P.00-5).

NO : Replace the ETACS-ECU.

Main Index
Group TOC

INSPECTION PROCEDURE P-21: Each switch signal of the keyless entry transmitter is not received.

⚠ CAUTION
Whenever the ECU is replaced, ensure that the input signal circuit is normal.

Transmitter Input Circuit

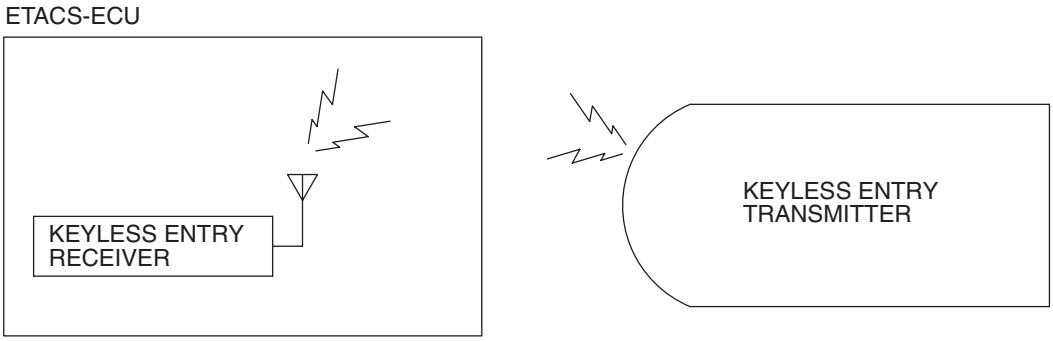

W3Z10E39AA

COMMENTS ON TROUBLE SYMPTOM

Input signal from the keyless entry transmitter is used to operate the keyless entry system. If the signal is abnormal, the keyless entry system will not work normally.

POSSIBLE CAUSES

- Malfunction of the keyless entry transmitter
- Defective battery of the keyless entry transmitter
- Malfunction of the ETACS-ECU

DIAGNOSTIC PROCEDURE

Step 1. Pulse check
Check whether the ETACS-ECU receives signal from a transmitter or not. For this check, you should use the 2-button-type transmitter (integrated with a key), which cover screw is silver and has already been registered.

NOTE: For how to register the keyless entry transmitter encrypted code, refer to GROUP 42– On-vehicle Service P.42-65.

System switch	Check condition
Keyless entry transmitter "LOCK/UNLOCK" switch	When the switch is turned from off to on

OK: The M.U.T.-III sounds or the voltmeter needle fluctuates.

Q: Is the check result normal?
YES : Go to Step 2.
NO : Go to Step 4.

Step 2. Check the transmitter battery.
Refer to GROUP 42 – Keyless entry system P.42-63.

Q: Is the check result normal?
YES : Go to Step 3.
NO : Replace the keyless entry transmitter battery.

Step 3. Register the encrypted code, and then retest the system.
(1) Register the keyless entry transmitter again.
(2) Check that each signal is received from the keyless entry transmitter.

Q: Is the check result normal?
YES : The trouble can be an intermittent malfunction (Refer to GROUP 00 – How to Cope with Intermittent Malfunction P.00-5).
NO : Replace the keyless entry transmitter.

Step 4. Retest the system.
Check that each signal is received from the keyless entry transmitter.

Q: Is the check result normal?
YES : The trouble can be an intermittent malfunction (Refer to GROUP 00 – How to Cope with Intermittent Malfunction P.00-5).
NO : Replace the ETACS-ECU.

Main Index
Group TOC

INSPECTION PROCEDURE P-22: The interior lamp loaded signal is not detected.

⚠ CAUTION
Whenever the ECU is replaced, ensure that the input signal circuit is normal.

Interior Lamp Automatic Shut-off Function Circuit

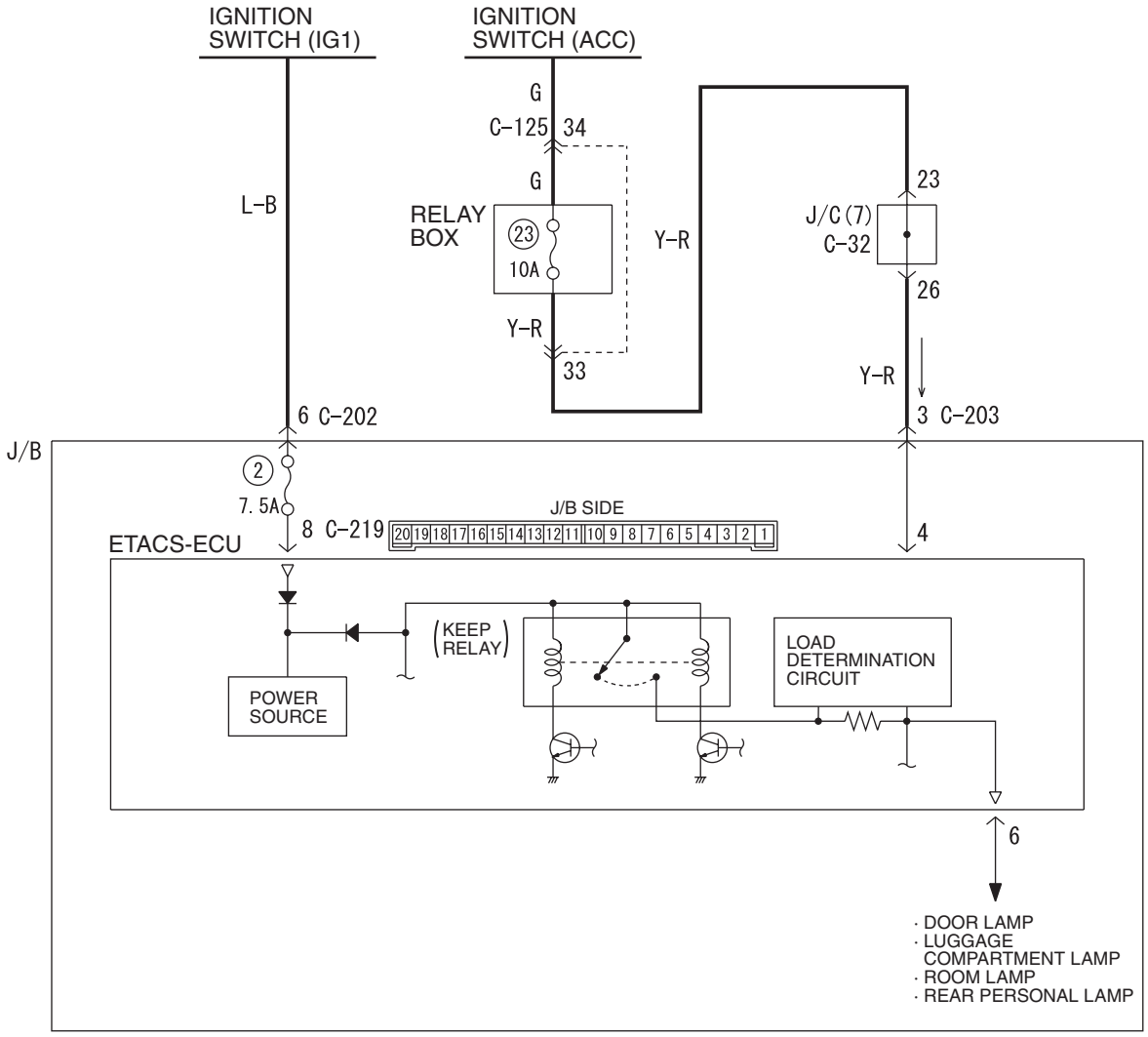

Wire colour code
B : Black LG : Light green G : Green L : Blue W : White Y : Yellow SB : Sky blue
BR : Brown O : Orange GR : Grey R : Red P : Pink V : Violet PU : Purple

W6X54X025A

COMMENTS ON TROUBLE SYMPTOM

The interior lamp automatic-shutdown function operates in accordance with the interior lamp loaded signal. If this signal is abnormal, the functions below will not work normally.

- Ignition key cylinder illumination lamp
- Room lamps

POSSIBLE CAUSES

- Malfunction of the ETACS-ECU
- Damaged wiring harness or connector(s)

Main Index
Group TOC

DIAGNOSTIC PROCEDURE

Step 1. Check the power supply circuit.
When the ignition switch is turned to the LOCK (OFF) position, check if the hazard warning lamps illuminate.

Q: Is the check result normal?
YES : Go to Step 2.
NO : Refer to inspection procedure A-2 "Check the ETACS-ECU battery power supply circuit P.54B-71."

Step 2. Connector check: C-219 ETACS-ECU connector

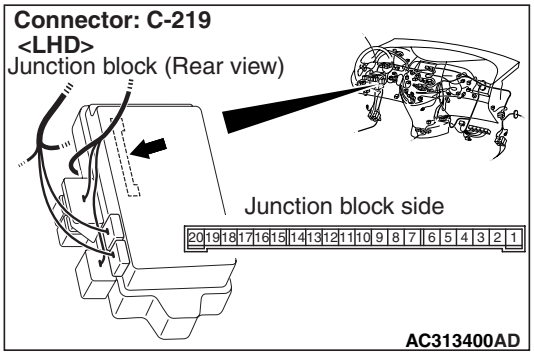

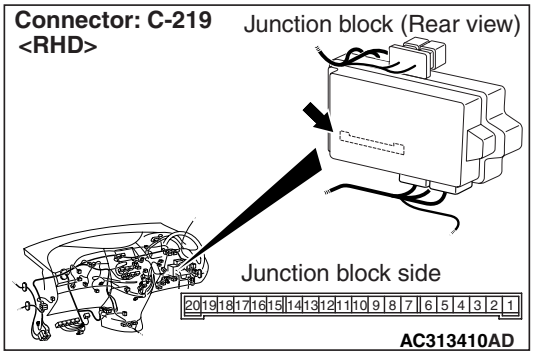

Q: Is the check result normal?
YES : Go to Step 3.
NO : Repair the defective connector.

Step 3. Voltage measurement at the C-219 ETACS-ECU connector.

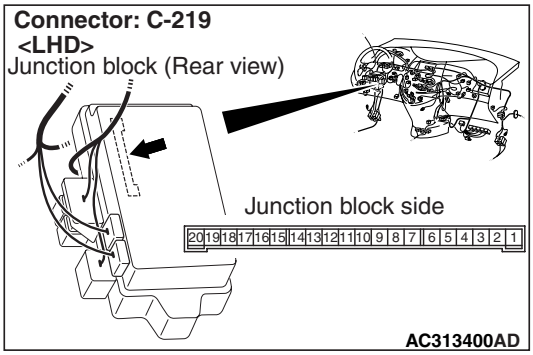

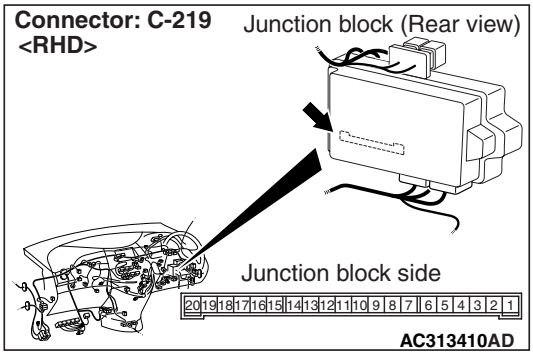

(1) Remove the ETACS-ECU, and measure at the junction block side.
(2) Turn the ignition switch to the ON position.

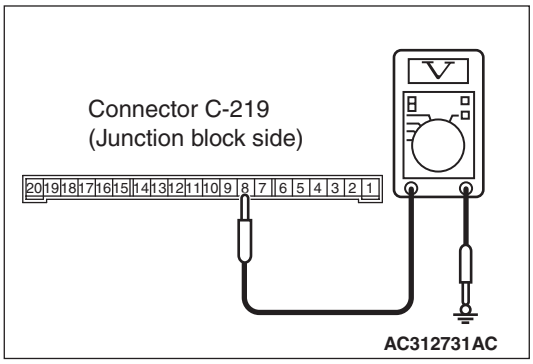

(3) Voltage between C-219 ETACS-ECU connector terminal No.8 and body earth

OK: System voltage

Q: Is the check result normal?
YES : Go to Step 5.
NO : Go to Step 4.

Main Index
Group TOC

Step 4. Check the wiring harness between C-219 ETACS-ECU connector terminal No.8 and the ignition switch (IG1).

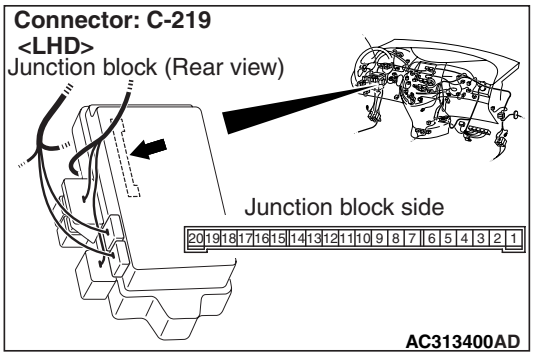

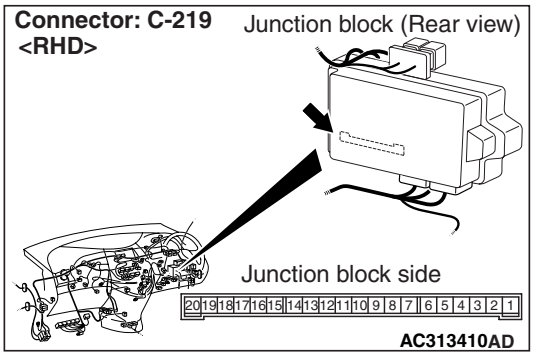

NOTE:

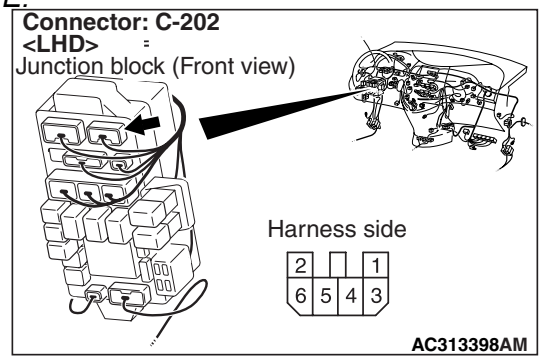

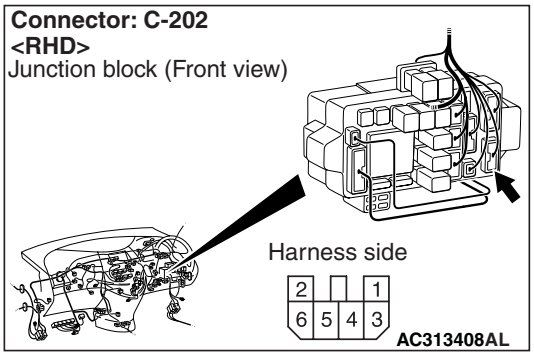

Prior to the wiring harness inspection, check junction block connector C-202, and repair if necessary.

- Check the power supply line to the ignition switch (IG1) for open circuit.

Q: Is the check result normal?

YES : The trouble can be an intermittent malfunction (Refer to GROUP 00 – How to Cope with Intermittent Malfunction P.00-5).

NO : Repair the wiring harness.

Step 5. Voltage measurement at the C-219 ETACS-ECU connector.

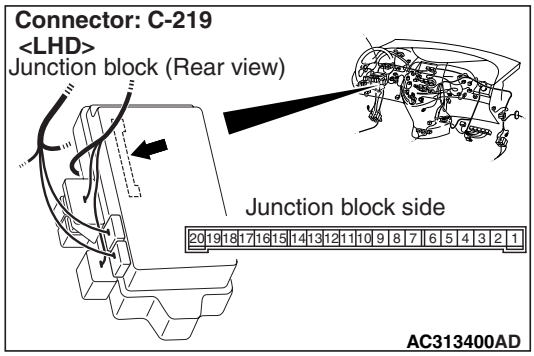

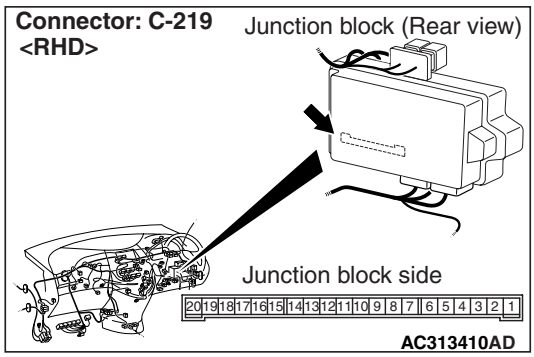

(1) Remove the ETACS-ECU, and measure at the junction block side.

(2) Turn the ignition switch to the ACC position.

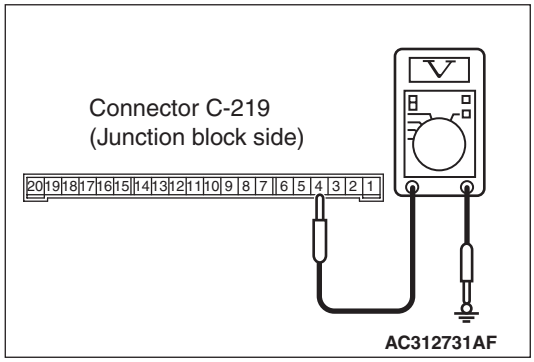

(3) Voltage between terminal 4 and body earth

OK: System voltage

Q: Is the check result normal?

YES : Go to Step 7.

NO : Go to Step 6.

Main Index
Group TOC

Step 6. Check the wiring harness between C-219 ETACS-ECU connector terminal No.4 and the ignition switch (ACC).

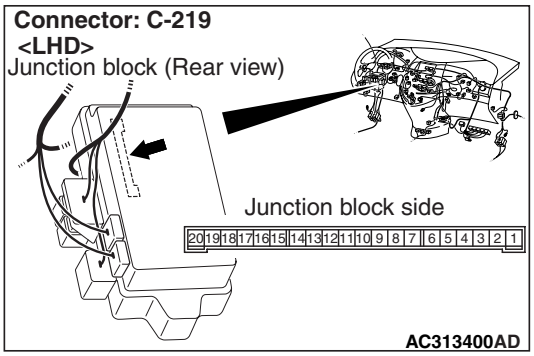

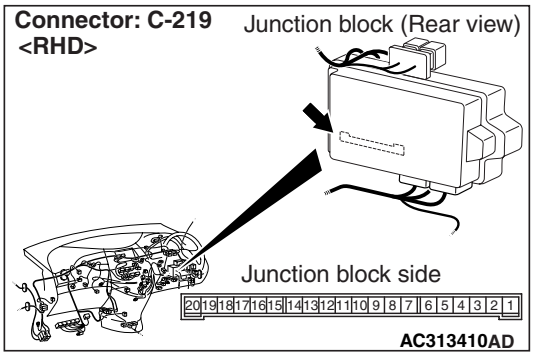

NOTE:

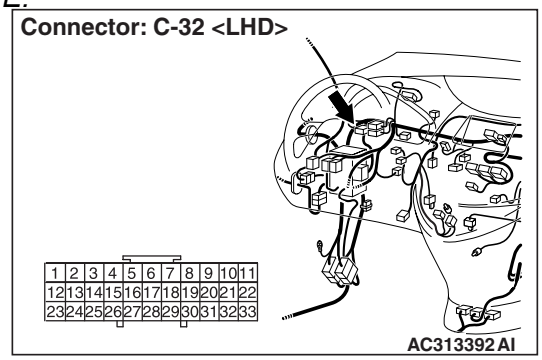

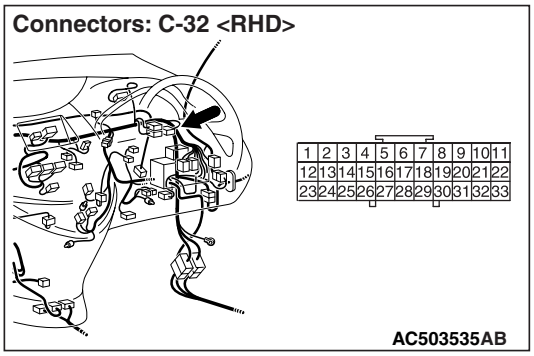

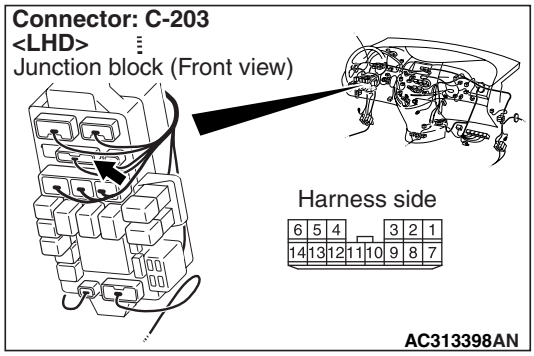

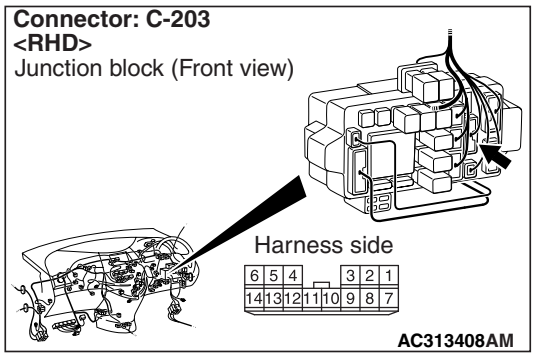

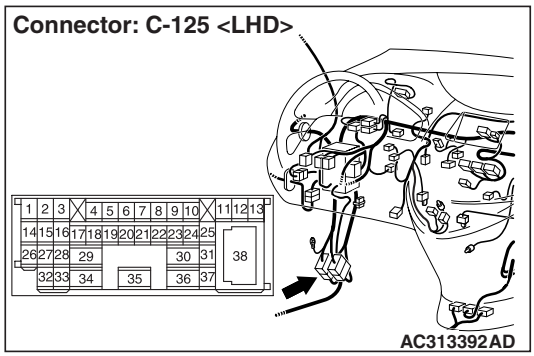

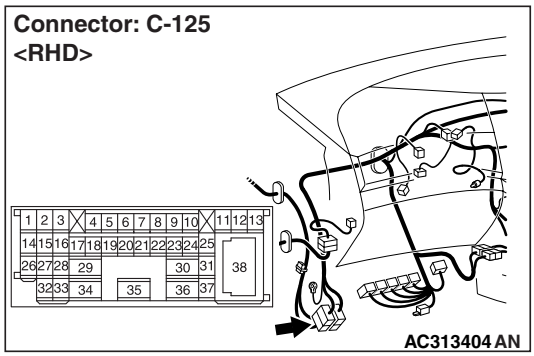

Prior to the wiring harness inspection, check joint connector C-32, junction block connector C-203 or intermediate connector C-125, and repair if necessary.

- Check the power supply line to the ignition switch (ACC) for open circuit.

Q: Is the check result normal?

YES : The trouble can be an intermittent malfunction (Refer to GROUP 00 – How to Cope with Intermittent Malfunction P.00-5).

NO : Repair the wiring harness.

Main Index
Group TOC

Step 7. Retest the system.
Check that the interior lamp loaded signal is received normally.

Q: Is the check result normal?
YES : . The trouble can be an intermittent malfunction (Refer to GROUP 00 – How to Cope with Intermittent Malfunction P.00-5).
NO : . Replace the ETACS-ECU.

INSPECTION PROCEDURE P-23: The vehicle speed signal is not received.

⚠ CAUTION
Whenever the ECU is replaced, ensure that the input signal circuit is normal.

Speed Signal Input Circuit

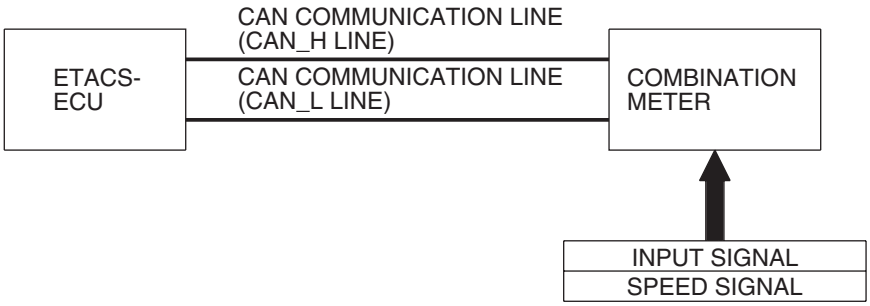

W4X54E218A

COMMENTS ON TROUBLE SYMPTOM

The vehicle speed signal is used to operate the functions below. If the signal is abnormal, these functions will not work normally.

- Windshield wiper and washer (vehicle speed-dependent wiper function)
- Seat belt warning buzzer function
- Door ajar warning buzzer function
- Seat belt indicator
- Door ajar indicator

POSSIBLE CAUSES

- The CAN bus line is defective.
- Malfunction of the vehicles speed sensor
- Malfunction of the ETACS-ECU
- Damaged harness wires and connectors

DIAGNOSTIC PROCEDURE

Step 1. M.U.T.-III CAN bus diagnostics
Use the M.U.T.-III to diagnose the CAN bus lines.

Q: Is the check result normal?
YES : Go to Step 2.
NO : Repair the CAN bus line (Refer to GROUP 54F – Troubleshooting P.54F-13).

Step 2. M.U.T.-III diagnosis code
Check whether the combination meter-related diagnosis code is set.

Q: Is the diagnosis code set?
YES : Diagnose the combination meter (Refer to GROUP 54A – Combination meter P.54A-73).
NO : Go to Step 3.

Main Index
Group TOC

Step 3. Pulse check

System switch	Check condition
Vehicle speed signal	When the vehicle speed has reached 10 km/h or more

OK: The M.U.T.-III sounds or the voltmeter needle fluctuates.

Q: Is the check result normal?

YES : The trouble can be an intermittent malfunction (Refer to GROUP 00 – How to Cope with Intermittent Malfunction P.00-5).

NO : Go to Step 4.

Step 4. Retest the system.

Check that the vehicle speed signal is received normally.

Q: Is the check result normal?

YES : . The trouble can be an intermittent malfunction (Refer to GROUP 00 – How to Cope with Intermittent Malfunction P.00-5).

NO : . Replace the ETACS-ECU.

Main Index
Group TOC

CHECK AT ECU TERMINAL

M1549001200908

ETACS-ECU

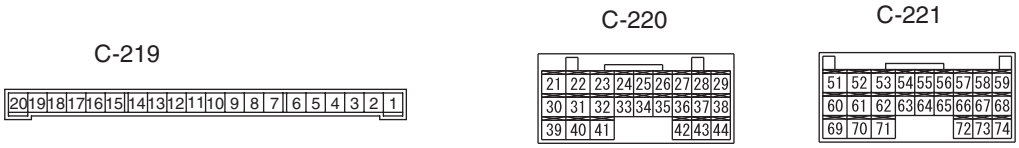

AC312902 AB

NOTE: Terminal numbers 1 to 20 can not be measured as the ETACS-ECU is mounted on the junction block directly. The values are for reference only.

Terminal No.	Check item	Check condition	Normal condition
1	Output to the power window relay	When the power windows are operative	System voltage
2	Power supply to the central door locking system (battery positive voltage)	Always	System voltage
3	Earth (for ECU)	Always	0 V
4	Ignition switch (ACC)	Ignition switch: ACC	System voltage
5	Output to room lamp	When the room lamp is on	2 V or less
6	Power supply to interior lamp (battery positive voltage)	Always (when the interior lamp off function is off)	System voltage
7	Input from left rear door switch	Left rear door switches: ON (left rear door open)	0 V
8	Power supply from ignition switch (IG1)	Ignition switch: ON	System voltage
9	Output to right turn-signal lamps	When right turn-signal lamps are on	System voltage
10	Input from driver's door switch	Driver's door switch: ON (door open)	0 V
11	Power supply to hazard warning lamp (battery positive voltage)	Always	System voltage
12	Output to central door locking (for locking the doors)	When the door lock actuators lock the doors	System voltage
13	Output to central door locking (for unlocking the doors other than the driver's door)	When the door lock actuators unlock the doors	System voltage
14	Output to left turn-signal lamps	When the left turn-signal lamps are on	System voltage
15	–	–	–
16	Output to rear wiper	When rear wiper is operating	System voltage
17	Input of rear wiper automatic stop signal	When rear wiper is operating	System voltage
18	Power supply from ignition switch (ACC)	Ignition switch: ACC	System voltage

Main Index
Group TOC

Terminal No.	Check item	Check condition	Normal condition
19	–	–	–
20	Battery power supply (for ECU)	Always	System voltage
21	Input from rear fog lamp switch	Rear fog lamp switch: ON	0 V
22	Output to central door locking (for unlocking the driver's door)	When the door lock actuators unlock the doors	System voltage
23	Rear washer output	When rear washer is operating	System voltage
24	Input from remote controlled mirror switch (fold switch)	Remote controlled mirror switch (fold switch): ON	0 V
29	Input from passenger’s seat belt switch	When passenger’s seat belt switch is on	–
30	Input to key reminder switch	Key reminder switch: ON (ignition key removed)	0 V
31	Output to electric retractable remote controlled mirror (unfold)	When the door mirrors are folding	System voltage
33	Input to door key switch or tailgate key switch (lock switch)	All doors and tailgate: Locked	0 V
34	Input to door key switch or tailgate key switch (unlock switch)	All doors and tailgate: Unlocked	0 V
35	Input to driver's door lock actuator (lock switch)	Driver's door lock: Locked	0 V
36	Input to driver's door lock actuator (unlock switch)	Driver's door lock: Unlocked	0 V
37	Input from tailgate switch	Tailgate switch: ON (tailgate open)	0 V
39	Input to back-up lamp switch	Sift lever: R Ignition switch: ON	System voltage
40	Output to electric retractable remote controlled mirror (unfold)	When the door mirrors are unfolding	System voltage
51	Setting diagnosis code or sending input check signal	When diagnosis code is set (the M.U.T.-II/III is connected or the diagnosis connector No.1 is earthed)	0 to 12 V (pulse signal)
		When input check signal is sent	0 V, 12 V (input signal is fluctuating)
52	Input from luggage compartment lamp switch	Luggage compartment lamp switch: ON	0 V
53	Input from interior lamp off switch	Interior lamp switch: OFF	0 V
54	Input from fog lamp switch	Fog lamp switch: ON	0 V
55	Input from hazard warning lamp switch	Hazard warning lamp switch: ON	0 V
56	Earth (for sensor)	Always	0 V
57, 58	–	–	–
59	SWS communication line	Always	0 to 12 V (pulse signal)

Main Index
Group TOC

Terminal No.	Check item	Check condition	Normal condition
60	Power supply to automatic air conditioner control (A/C-ECU) illumination and radio illumination (battery positive voltage)	Always	System voltage
61	Input to tailgate lock actuator	Tailgate lock: Locked	0 V
62	Input to tailgate lock release handle	Tailgate lock release handle: ON	0 V
63	Input from interior lamp on switch	Interior lamp switch: ON	0 V
64	–	–	–
65	Input from passenger's door switch	Passenger's door switch: ON (door open)	0 V
66	Input from windshield intermittent wiper volume	Turn the ignition switch to the ACC position, and move the wiper volume from "Fast" to "Slow."	0 to 2.5 V
67	Input from diagnosis control	When M.U.T.-III is connected	0 V
68	Input of SWS request signal	Always	0 to 12 V (pulse signal)
69	Output to ignition key cylinder illumination lamp	When ignition key cylinder illumination is on	2 V or less
70	Input from right rear door switch	Right rear door switches: ON (right rear door open)	0 V
71	Power supply to interior lamp	Always (when the interior lamp off function is off)	System voltage
72 – 73	–	–	–
74	Output to rear fog lamp	When rear fog lamp is on	System voltage

COLUMN SWITCH

C-301

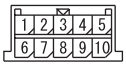

AC312903 AB

Terminal No.	Check item	Check condition	Normal condition
1	System voltage	Always	System voltage
2	Input of SWS request signal	Always	0 to 12 V (pulse signal)
3	SWS communication line	Always	0 to 12 V (pulse signal)
4	Earth	Always	0 V
5	–	–	–
6	Output to windshield intermittent wiper volume	Ignition switch: ACC Move the wiper volume from "Fast" to "Slow."	0 to 2.5 V
7	–	–	–

Main Index
Group TOC

Terminal No.	Check item	Check condition	Normal condition
8	Back-up output to windshield wiper switch	Windshield low-speed wiper switch or windshield high-speed wiper switch: ON	0 V
9	Power supply from ignition switch (IG1)	Ignition switch: ON	System voltage
10	Back-up output to headlamp switch	Headlamp switch: ON	0 V

FRONT-ECU

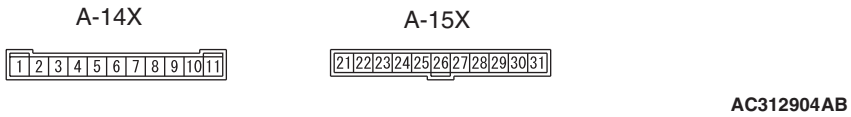

NOTE: Measurement is not possible as the front-ECU is mounted on the relay box directly. The values are for reference only.

Terminal No.	Check item	Check condition	Normal condition
1 – 2	–	–	–
3	Battery power supply (for headlamp washer)	Always	System voltage
4	Output to tail lamps	When the tail lamps are on	System voltage
5	Battery power supply (for ECU)	Always	System voltage
6	Output to low-beam headlamps	When low-beam headlamps are on	System voltage
7	Battery power supply (for tail lamps)	Always	System voltage
8, 9	Battery power supply (for headlamps)	Always	System voltage
10	Output to high-beam headlamps	When high-beam headlamps are on	System voltage
11	Output to front fog lamps	When front fog lamps are on	System voltage
21	Earth	Always	0 V
22	Power supply to the ignition switch (IG2)	Ignition switch: ON	System voltage
23	–	–	–
24	Output to windshield wiper (high speed operation)	When windshield wipers are operating at high speed	System voltage
25	Output to windshield wiper (low speed operation)	When windshield wipers are operating at low speed	System voltage
26	Back-up input from windshield wiper switch	Windshield low-speed wiper switch or windshield high-speed wiper switch: ON	0 V
27	Back-up input from headlamp switch	Headlamp switch: ON	0 V
28	Power supply from ignition switch (ACC)	Ignition switch: ACC	System voltage

Main Index
Group TOC

Terminal No.	Check item	Check condition	Normal condition
29	Input of windshield wiper automatic stop signal	When windshield wipers are operating	System voltage
30	SWS communication line	Always	0 to 12 V (pulse signal)
31	Output to windshield washer	When windshield washer is operating	System voltage

SUNROOF MOTOR ASSEMBLY

E-07

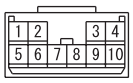

AC312932AB

Terminal No.	Check item	Check condition	Normal condition
1	System voltage (for motor)	Always	System voltage
2	Power supply from ignition switch (IG2)	Ignition switch: ON	System voltage
3, 4	–	–	–
5	Earth	Always	0 V
6	Input from sunroof switch (close)	Sunroof switch: Close	0 V
7	–	–	–
8	Input from sunroof switch (open)	Sunroof switch: Open	0 V
9	–	–	–
10	SWS communication line (to ETACS-ECU)	Always	0 to 12 V (pulse signal)