GROUP 54C

SMART WIRING SYSTEM (SWS) USING SWS MONITOR <Except vehicles for Hong Kong and Singapore>

CONTENTS

GENERAL INFORMATION 54C-3

SPECIAL TOOLS. 54C-3

TROUBLESHOOTING 54C-5
- PRIOR TO TROUBLESHOOTING 54C-5
- STANDARD FLOW OF DIAGNOSTIC TROUBLESHOOTING 54C-5
- HOW TO CONNECT THE SWS MONITOR 54C-6
- ECU CHECK. 54C-7
- DATA LIST CHECK 54C-7
- PULSE CHECK. 54C-18
- M.U.T.-III DRIVE RECORDER FUNCTION 54C-19

DIAGNOSIS CODE CHART 54C-19

DIAGNOSTIC TROUBLE CODE PROCEDURES 54C-20

TROUBLE SYMPTOM CHART 54C-32

CHECK TROUBLE BY USING THE INPUT SIGNAL CHECK 54C-37

OPERATION AND FUNCTION QUICK-REFERENCE TABLE FOR INPUT SIGNAL INSPECTION PROCEDURES 54C-39

Continued on next page

Main Index
Group TOC

SYMPTOM PROCEDURES 54C-41
BUZZER 54C-70
CENTRAL DOOR LOCKING SYSTEM. . . . 54C-81
POWER WINDOW 54C-106
KEYLESS ENTRY SYSTEM. 54C-142
SUNROOF 54C-148
WINDSHIELD WIPER AND WASHER 54C-161
REAR WIPER AND WASHER 54C-180
ELECTRIC RETRACTABLE REMOTE CONTROLLED DOOR MIRROR 54C-195
IGNITION KEY CYLINDER ILLUMINATION LAMP 54C-209
SEAT BELT WARNING LAMP 54C-213
HEADLAMP AND TAIL LAMP. 54C-217
FLASHER TIMER 54C-241
FOG LAMP 54C-263
INTERIOR LAMP. 54C-271

INPUT SIGNAL PROCEDURES. 54C-332

CHECK AT ECU TERMINAL 54C-427

ON-VEHICLE SERVICE 54C-432
CUSTOMIZE FUNCTION 54C-432

Main Index
Group TOC

GENERAL INFORMATION

M1549000100588

For the general information regarding the SWS, refer to GROUP 54B – General Information P.54B-3.

SPECIAL TOOLS

M1549000301314

Tool	Number	Name	Use
a 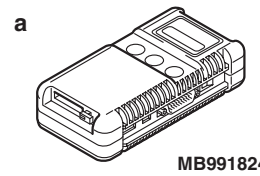 MB991824 b 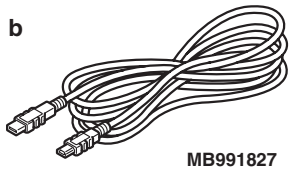 MB991827 c 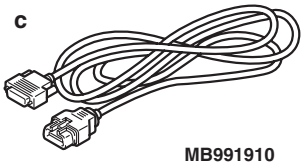 MB991910 d 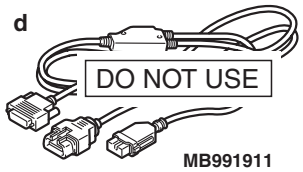 MB991911 e 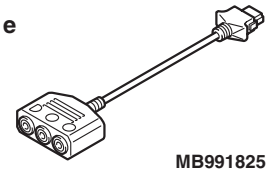 MB991825 f 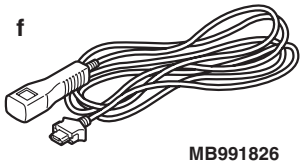 MB991826 MB991955	MB991955 a. MB991824 b. MB991827 c. MB991910 d. MB991911 e. MB991825 f. MB991826	M.U.T.-III sub-assembly a. Vehicle Communication Interface (V.C.I.) b. M.U.T.-III USB cable c. M.U.T.-III main harness A (Vehicles with CAN communication system) d. M.U.T.-III main harness B (Vehicles without CAN communication system) e. M.U.T.-III measure adapter f. M.U.T.-III trigger harness	SWS communication line check (ECU check and service data) **⚠ CAUTION** **M.U.T.-III main harness B (MB991911) should be used. M.U.T.-III main harness A should not be used for this vehicle.**
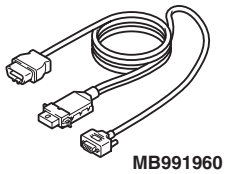 MB991960	MB991960	Intermediate wiring harness for SWS customization	SWS communication line check (ECU check, service data)

Main Index
Group TOC

Tool	Number	Name	Use
a b c d 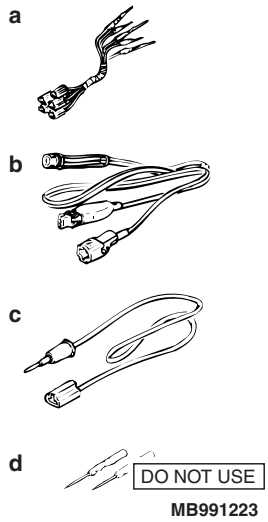	MB991223 a. MB991219 b. MB991220 c. MB991221 d. MB991222	Harness set a. Check harness b. LED harness c. LED harness adapter d. Probe	Continuity check and voltage measurement at harness wire or connector a. For checking connector pin contact pressure b. For checking power supply circuit c. For checking power supply circuit d. For connecting a locally sourced tester
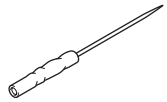	MB992006	Extra fine probe	Continuity check and voltage measurement at harness wire or connector
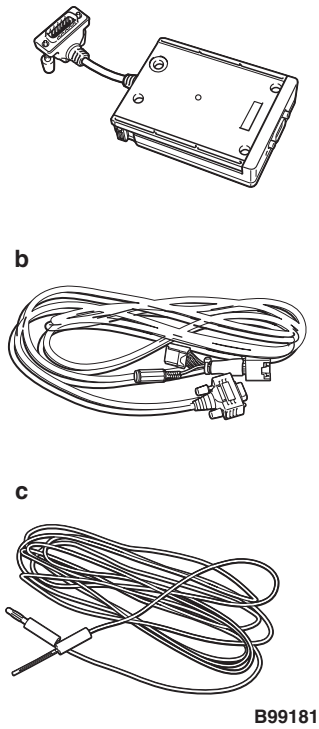	MB991813 a. MB991806 b. MB991812 c. MB991822	SWS monitor kit a. SWS monitor cartridge b. SWS monitor harness (for column-ECU) c. Probe harness	SWS communication line check (ECU check and service data)
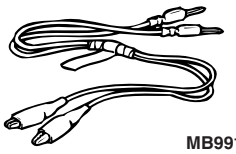	MB991529	Diagnosis code check harness	Input signal check by using a voltmeter

Main Index
Group TOC

TROUBLESHOOTING

PRIOR TO TROUBLESHOOTING

M1549014700583

Before carrying out troubleshooting, check the following two items.

- Make sure that the ETACS-ECU, the junction block (J/B), the front-ECU and the engine compartment relay box are connected securely.
- Check that the system fuses and fusible links are not burned out.

STANDARD FLOW OF DIAGNOSTIC TROUBLESHOOTING

M1549000500779

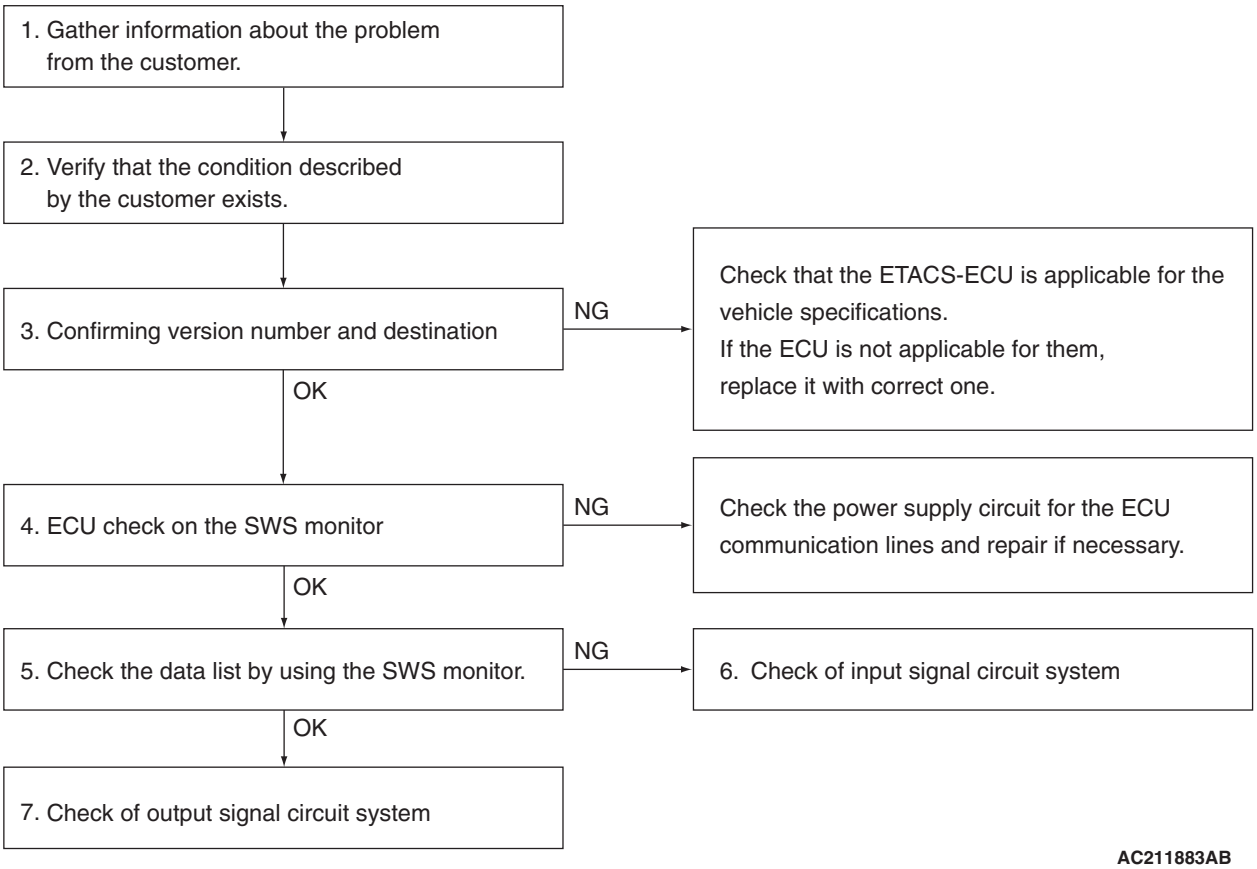

AC211883AB

1. Gather information about the problem from the customer.
2. Verify that the condition described by the customer exists.

   NOTE: If an error occurs in the SWS communication line, the ECU isolated from the communication line performs a fail-safe or backup operation, so the problem may not match the one shown in the Trouble Symptom Chart. However, the cause of the failure can be tracked down by performing the following troubleshooting with the SWS monitor.

3. Confirming version number and destination

   Check whether the SWS version number (0) and destination (EU W/O DRL) meet the vehicle specifications. If they are different, replace the ETACS-ECU with a correct one.

4. ECU check by using the SWS monitor

   Check whether the communication status of the input- or output-signal-side ECU associated with the defective function is normal.

   - If "OK " is displayed for all related ECUs, they communicate with each other normally and the input or output signal circuit system may be defective. Therefore, check SWS monitor service data.

Main Index
Group TOC

- If "NG" is displayed for any of the related ECUs, something may be wrong with the ECU for which "NG" appears, its power supply or earthing system, or a wiring harness or connector between the SWS monitor and the ECU. Check the wiring harness and connectors associated with the ECU and examine the ECU itself.

5. SWS monitor data list

   Select the defective function from the function-specific diagnostic menu, and check the service data that appears for each function item. This allows you to check whether the transmission data is normal or not. You can judge which circuit is the cause of the trouble, input circuit or output circuit.

   NOTE: In addition to the function-specific diagnostic menu, a service data menu is available for SWS monitor service data to check all items for each ECU.

   - The switch condition does not meet the service data display: Input signal system related to defective functions
   - The switch condition meets the service data display: Output signal system related to defective functions

6. Check of input signal circuit system

   Check relevant switch, sensor, input signal-side ECU and their wiring harness and connector.

7. Check of output signal circuit system

   Check an output signal-side ECU, electrical load components and their wiring harness and connector.

HOW TO CONNECT THE SWS MONITOR

M1549014800591

⚠ CAUTION

Always turn the ignition switch to the "LOCK" (OFF) position before connecting or disconnecting the SWS monitor and the M.U.T.-III.

HOW TO CONNECT THE SWS COMMUNICATION LINE <SPECIAL TOOL SWS MONITOR HARNESS (FOR COLUMN-ECU) MB991812>

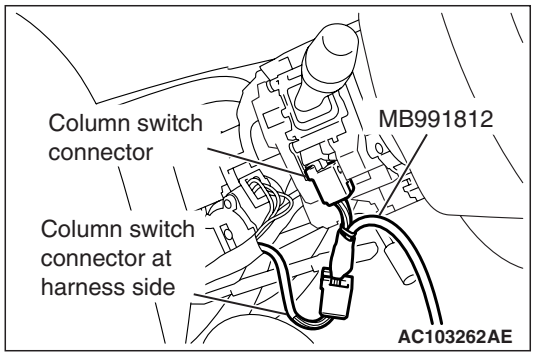

1. Remove the steering column cover.
2. Remove the steering column switch connector.
3. Connect special tool SWS monitor harness (for column-ECU) MB991812.

<WHEN CONNECTING THE DIAGNOSIS CONNECTOR BY USING THE INTERMEDIATE WIRES FOR SWS MONITOR CUSTOMIZATION>

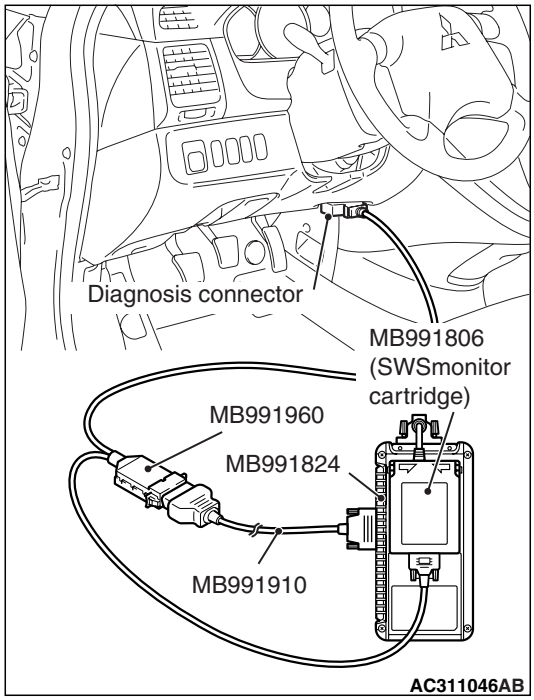

Main Index
Group TOC

1. Connect the special tool Intermediate wires (MB991960) for SWS monitor customization to the special tool M.U.T.-III main harness A (MB991910).
2. Connect the M.U.T.-III main harness A (with the intermediate wires) to the special tool V.C.I. (MB991824).
3. Connect the intermediate wires for SWS monitor customization to the the diagnosis connector and the SWS monitor cartridge.

ECU CHECK

M1549014900532

1. Use the M.U.T.-III and the SWS monitor to check ECUs.
2. The following ECUs can be checked by using the M.U.T.-III and the SWS monitor.

NOTE: If a malfunction is found by the "ECU check", proceed "Symptom Procedure" (Refer to P.54C-32).

SWS monitor-compatible ECUs and their conditions

Item No.	ECUs to be checked	Display on M.U.T.-III	Normal condition	ECU conditions
Item 80	Column switch (column-ECU)	COLUMN ECU	OK*	All of the column switch, power supply, earth and interconnecting communication line are normal
Item 83	ETACS-ECU	ETACS ECU	OK	All of the ETACS-ECU switch, power supply, earth and interconnecting communication line are normal
Item 84	Front-ECU	FRONT ECU	OK	All of the front-ECU, power supply, earth and interconnecting communication line are normal
Item 86	Sunroof motor assembly (sunroof-ECU)	SUNROOF ECU	OK	All of the sunroof motor assembly, power supply, earth and interconnecting communication line are normal
–	Other SWS-related ECUs	Other ECUs	NG	Because the ECU does not conduct SWS communication, NG is always displayed.

*NOTE: *: If "NG" is displayed beside the ETACS-ECU while the ignition switch is off, "NG" is also displayed beside the column-ECU.*

DATA LIST CHECK

M1549015000929

1. Use the M.U.T.-III and the SWS monitor to check "DATA LIST." This "DATA LIST" check is applicable for signals, which are transmitted and received through the SWS communication line and the communication lines routed from one door to another. For the input signals which are not applicable for the SWS monitor check, refer to pulse check procedure P.54C-37.

NOTE: If a problem is found in the "DATA LIST" check, refer to the Problems during Input Signal Check <Service data, function diagnosis or pulse check> (Refer to P.54C-37).

2. The following input signals can be checked by using the M.U.T.-III and the SWS monitor.

Main Index
Group TOC

DATA LIST REFERENCE TABLE
COLUMN SWITCH (COLUMN-ECU)

Item No.	Check item	Display on M.U.T.-III	Check condition	Normal condition
00	Headlamp switch	HEADLAMP SW	lighting switch: HEAD	ON
			lighting switch: Other than HEAD	OFF
01	Tail lamp switch	TAIL LAMP SW	Lighting switch: TAIL	ON
			Lighting itch: OFF	OFF
02	Dimmer switch	DIMMER SW	Dimmer switch: ON	ON
			Dimmer switch: OFF	OFF
03	Passing lamp switch	PASSING SW	Passing lamp which: ON	ON
			Passing lamp which: OFF	OFF
05	Windshield intermittent wiper switch	INT WIPER SW	Wiper switch: INT	ON
			Wiper switch: Other than INT	OFF
06	Windshield low-speed wiper switch	LO WIPER SW	Wiper switch: LO	ON
			Wiper switch: Other than LO	OFF
07	Windshield high-speed wiper switch	HI WIPER SW	Wiper switch: HI	ON
			Wiper switch: Other than HI	OFF
08	Wind shield mist wiper switch	MIST WIPER SW	Wiper switch: Mist	ON
			Wiper switch: Other than mist	OFF
09	Windshield washer switch	FRONT WASH. SW	Windshield washer switch: ON	ON
			Windshield washer switch: OFF	OFF
10	Turn-signal lamp switch (RH)	TURN SIG. RH	Turn-signal lamp switch: RH	ON
			Turn-signal lamp switch: Other than RH	OFF
11	Turn-signal lamp switch (LH)	TURN SIG. LH	Turn-signal lamp switch: LH	ON
			Turn-signal lamp switch: Other than LH	OFF
13	Rear wiper switch	REAR WIPER SW	Rear wiper switch: INT	ON
			Rear wiper switch: Other than INT	OFF
14	Rear washer switch	REAR WASH. SW	Rear wiper switch: Washer	ON
			Rear wiper switch: Other than washer	OFF
15	With or without windshield intermittent wiper control	INT WIP KNOB	Vehicles with intermittent wiper control	EQUIP
			Vehicles without intermittent wiper control	NONE

Main Index
Group TOC

ETACS-ECU

Item No.	Check item	Display on M.U.T.-III	Check condition	Normal condition
30	Ignition switch (IG1)	IG SW(IG1)	Ignition switch: ON or START	ON
			Ignition switch: LOCK (OFF) or ACC	OFF
31	Ignition switch (ACC)	IG SW(ACC)	Ignition switch: ACC or ON	ON
			Ignition switch: LOCK (OFF) or START	OFF
32	Driver's door switch	DR DOOR SW	Driver's door switch ON (The driver's door is open).	ON
			Driver's door switch OFF (The driver's door is closed).	OFF
34	Multimode keyless entry system	KEYLESS ENTRY	1. Keyless entry transmitter LOCK switch: ON 2. Turn ON the keyless entry transmitter LOCK switch again (For the second switch operation, hold pressing the switch for at least one second within 30 seconds after the switch is turned on at first).	Multi-close (only momentarily when switch is operated)
			Other than the conditions above	WAITING
35	Headlamp automatic-shutdown function	HD AUTO-CUT	1. Lighting switch: Other than OFF 2. Ignition switch: from ON or START to LOCK (OFF) or ACC 3. Driver's door switch: ON (driver's door open)	OFF to ON (after approximately one second)
			When requirements for the headlamp automatic-shutdown are not satisfied	OFF
36	Request of fog lamp illumination	F.FOG LAMP	1. Lighting switch: "TAIL" or "HEAD" 2. Fog lamp switch: ON	ON
			Other than the conditions above	OFF
37	Windshield intermittent wiper interval	INT WIPE TIME	1. Ignition switch: ACC or ON 2. Operate the intermittent wiper control, and change the wiper interval	The M.U.T.-III displays intermittent wiper interval in response to the intermittent wiper control positions
41	Back-up lamp switch	INHIBITOR SW	Back-up lamp switch: ON	ON
			Back-up lamp switch: OFF	OFF
42	Wiper activation command	WOPER ON COM	Set	YES
			Without	NO
43	Buzzer	BUZZER	1. Ignition switch: LOCK (OFF) position 2. Tail lamp or headlamp switch: ON 3. Driver's door switch: ON (driver's door open)	ON
			When requirements for sounding each warning buzzer are not satisfied	OFF

Main Index
Group TOC

Item No.	Check item	Display on M.U.T.-III	Check condition	Normal condition
52	Support for rear sunroof lock	REAR S/R LOCK	Action	SUPPORT
			Not supported	NON SUPPORT
54	Intermittent wiper operation period	INT TIME SPEC	Maximum 32 seconds	MAX.32s Spec
			Maximum 19 seconds	MAX.19s Spec
56	Washer-linked wiper	WIP-LINK WASH	Set	EQUIP
			Without	NONE

NOTE: For Item 43 "BUZZER", the M.U.T.-III also displays "ON" when the ignition key reminder warning is triggered.

FRONT-ECU

Item No.	Check item	Display on M.U.T.-III	Check condition	Normal condition
70	Response by the front-ECU	Front ECU response	Lighting switch: Other than OFF (excluding when high-beam is on) or the wiper switch is at position other than OFF	Normal response
			• Ignition switch: ON or START • Lighting switch: OFF • Lighting switch: OFF	SLEEP RESPONSE
			• Lighting switch: HEAD • Headlamps: at high beam	HI BEAM RESPONSE
			–	No response

NOTE: For item number 70, the M.U.T.-III also displays "NG" under the "ECU Check" when it displays "No response" under the front-ECU check.

SUNROOF MOTOR ASSEMBLY (SUNROOF-ECU)

Item No.	Check item	Display on M.U.T.-III	Check condition	Normal condition
72	Response by the sunroof-ECU	S/R ECU ACK	1. Ignition switch: from ON to OFF 2. While sunroof is off	NORMAL ACK to SLEEP ACK (after approximately 30 seconds)
			1. Ignition switch: ON or START 2. Sunroof switch: Any button of the switch is on	INPUT CHECK to NORMAL ACK
			–	NO ACK

NOTE: For Item 72 "S/R ECU ACK", the M.U.T.-III also displays "NG" under the ECU check when it displays "NO ACK" under the "S/R ECU ACK" check.

Main Index
Group TOC

FUNCTION DIAGNOSIS

The table below shows the service data and their normal condition, which are displayed during the "FUNCTION DIAG." The row "Normal condition" shows values, which are shown when each operation is made.

WIPER

Item	Input signal	Item No.	Display on M.U.T.-III	Normal condition
F.WIPER INT (intermittent)	Windshield intermittent wiper switch	05	INT WIPER SW	ON
	Windshield low-speed wiper switch	06	LO WIPER SW	OFF
	Windshield high-speed wiper switch	07	HI WIPER SW	OFF
	Wind shield mist wiper switch	08	MIST WIPER SW	OFF
	Windshield washer switch	09	FRONT WASH. SW	OFF
	Ignition switch (ACC)	31	IG SW(ACC)	ON
	Windshield intermittent wiper interval	37	WIPER INT TIME	The M.U.T.-III displays intermittent wiper interval in response to the intermittent wiper control positions
	Response by the front-ECU	70	FRONT ECU ACK	NORMAL ACK or HI-BEAM ACK
F.WIPER LO (low speed)	Windshield intermittent wiper switch	05	INT WIPER SW	OFF
	Windshield low-speed wiper switch	06	LO WIPER SW	ON
	Windshield high-speed wiper switch	07	HI WIPER SW	OFF
	Wind shield mist wiper switch	08	MIST WIPER SW	OFF
	Windshield washer switch	09	FRONT WASH. SW	OFF
	Ignition switch (ACC)	31	IG SW(ACC)	ON
	Response by the front-ECU	70	FRONT ECU ACK	NORMAL ACK or HI-BEAM ACK

Main Index
Group TOC

Item	Input signal	Item No.	Display on M.U.T.-III	Normal condition
F.WIPER HI (high speed)	Windshield intermittent wiper switch	05	INT WIPER SW	OFF
	Windshield low-speed wiper switch	06	LO WIPER SW	OFF
	Windshield high-speed wiper switch	07	HI WIPER SW	ON
	Wind shield mist wiper switch	08	MIST WIPER SW	OFF
	Windshield washer switch	09	FRONT WASH. SW	OFF
	Ignition switch (ACC)	31	IG SW(ACC)	ON
	Response by the front-ECU	70	FRONT ECU ACK	NORMAL ACK or HI-BEAM ACK
F.WIPER MIST	Windshield intermittent wiper switch	05	INT WIPER SW	OFF
	Windshield low-speed wiper switch	06	LO WIPER SW	OFF
	Windshield high-speed wiper switch	07	HI WIPER SW	OFF
	Wind shield mist wiper switch	08	MIST WIPER SW	ON
	Windshield washer switch	09	FRONT WASH. SW	OFF
	Ignition switch (ACC)	31	IG SW(ACC)	ON
	Response by the front-ECU	70	FRONT ECU ACK	NORMAL ACK or HI-BEAM ACK
F.WIPER WASH	Wind shield mist wiper switch	08	MIST WIPER SW	OFF
	Windshield washer switch	09	FRONT WASH. SW	ON
	Ignition switch (ACC)	31	IG SW(ACC)	ON
	Response by the front-ECU	70	FRONT ECU ACK	NORMAL ACK or HI-BEAM ACK

Main Index
Group TOC

REAR WIPER

Item	Input signal	Item No.	Display on M.U.T.-III	Normal condition
REAR WIPER	Rear wiper switch	13	REAR WIPER SW	ON
	Rear washer switch	14	REAR WASH. SW	OFF
	Ignition switch (ACC)	31	IG SW(ACC)	ON
REV. INTERLOCK	Rear wiper switch	13	REAR WIPER SW	ON
	Ignition switch (ACC)	31	IG SW(ACC)	ON
	Back-up lamp switch <M/T>	41	INHIBITOR SW	ON
REAR WASHER	Rear washer switch	14	REAR WASH. SW	ON
	Ignition switch (ACC)	31	IG SW(ACC)	ON

LIGHTING

Item	Input signal	Item No.	Display on M.U.T.-III	Normal condition
OFF	Headlamp switch	00	HEADLAMP SW	OFF
	Tail lamp switch	01	TAIL LAMP SW	OFF
	Passing lamp switch	03	PASSING SW	OFF
	Ignition switch (IG1)	30	IG SW(IG1)	ON
	Headlamp automatic-shutdown function	35	HD AUTO-CUT	OFF
	Response by the front-ECU	70	FRONT ECU ACK	NORMAL ACK or HI-BEAM ACK
TAIL LAMP	Headlamp switch	00	HEADLAMP SW	OFF
	Tail lamp switch	01	TAIL LAMP SW	ON
	Passing lamp switch	03	PASSING SW	OFF
	Ignition switch (IG1)	30	IG SW(IG1)	ON
	Headlamp automatic-shutdown function	35	HD AUTO-CUT	OFF
	Response by the front-ECU	70	FRONT ECU ACK	NORMAL ACK

Main Index
Group TOC

Item	Input signal	Item No.	Display on M.U.T.-III	Normal condition
HEADLAMP LO (low-beam)	Headlamp switch	00	HEADLAMP SW	ON
	Passing lamp switch	03	PASSING SW	OFF
	Ignition switch (IG1)	30	IG SW(IG1)	ON
	Headlamp automatic-shutdown function	35	HD AUTO-CUT	OFF
	Response by the front-ECU	70	FRONT ECU ACK	NORMAL ACK
HEADLAMP HI (high-beam)	Headlamp switch	00	HEADLAMP SW	ON
	Dimmer switch	02	DIMMER SW	ON
	Ignition switch (IG1)	30	IG SW(IG1)	ON
	Headlamp automatic-shutdown function	35	HD AUTO-CUT	OFF
	Response by the front-ECU	70	FRONT ECU ACK	HI-BEAM ACK
PASSING LAMP	Passing lamp switch	03	PASSING SW	ON
	Response by the front-ECU	70	FRONT ECU ACK	NORMAL ACK or HI-BEAM ACK
F.FOG LAMP	Headlamp switch	00	HEADLAMP SW	Either of items is ON
	Tail lamp switch	01	TAIL LAMP SW	
	Ignition switch (IG1)	30	IG SW(IG1)	ON
	Headlamp automatic-shutdown function	35	HD AUTO-CUT	OFF
	Request of fog lamp illumination	36	F.FOG LAMP	ON
	Response by the front-ECU	70	FRONT ECU ACK	NORMAL ACK
HD AUTO-CUT	Headlamp switch	00	HEADLAMP SW	Either is on
	Tail lamp switch	01	TAIL LAMP SW	
	Ignition switch (IG1)	30	IG SW(IG1)	OFF
	Driver's door switch	32	DR DOOR SW	ON
	Headlamp automatic-shutdown function	35	HD AUTO-CUT	ON
	Response by the front-ECU	70	FRONT ECU ACK	NORMAL ACK or HI-BEAM ACK

Main Index
Group TOC

NOTE:

1. *When checking the input signals (off, tail, low-beam or high-beam), turn the ignition switch to the "ON" position in order to disable the headlamp automatic-shutdown function. However, the titles on the M.U.T.-III screen will not be highlighted as this has nothing to do with actual lamp operation.*
2. *For checking item "HEADLAMP HI", the M.U.T.-III displays "OFF" on the item No.2 "DIMMER SW" when the headlamps are at high-beam. Therefore, the M.U.T.-III should display "ON" momentarily when the dimmer switch is operated.*

TURN SIGNAL LAMP

Item	Input signal	Item No.	Display on M.U.T.-III	Normal condition
Turn-signal lamp (RH)	Turn-signal lamp switch (RH)	10	TURN SIGNAL RH SW	ON
	Turn-signal lamp switch (LH)	11	TURN SIGNAL LH SW	OFF
	Ignition switch (IG1)	30	IGNITION SW IG1	ON
Turn-signal lamp (LH)	Turn-signal lamp switch (RH)	10	TURN SIGNAL RH SW	OFF
	Turn-signal lamp switch (LH)	11	TURN SIGNAL LH SW	ON
	Ignition switch (IG1)	30	IGNITION SW IG1	ON

BUZZER

Item	Input signal	Item No.	Display on M.U.T.-III	Normal condition
Lighting monitor buzzer	Headlamp switch	00	HEADLAMP SW	Either is on
	Tail lamp switch	01	TAIL LAMP SW	
	Ignition switch (IG1)	30	IGNITION SW IG1	OFF
	Driver's door switch	32	DRIVER DOOR SW	ON
	Headlamp automatic-shutdow n function	35	HD LAMP AUTOCUT	OFF
	Buzzer	43	Buzzer	ON
KEY REMND.ALM	Ignition switch (IG1)	30	IG SW(IG1)	OFF
	Driver's door switch	32	DR DOOR SW	ON
	Buzzer	43	BUZZER	ON

NOTE: The headlamp automatic-shutdown function works in approximately one second after the lighting monitor buzzer starts sounding, and then the buzzer ceases sounding.

Main Index
Group TOC

KEYLESS ENTRY SYSTEM

Item	Input signal	Item No.	Display on M.U.T.-III	Normal condition
Multi-close	Reception of power window switch	33	P/W SW ACCEPT	PERMIT
	Multimode keyless entry system	34	KEYLESS ENTRY	Multi-close (only momentarily when switch is operated)
	Response by power window module	71	P/W ECU ACK	NORMAL ACK or P/WLOCK ACK
	Response by the sunroof-ECU	72	S/R ECU ACK	NORMAL ACK to INPUT CHECK (only when the switch is operated)

SUNROOF

Item	Input signal	Item No.	Display on M.U.T.-III	Normal condition
SUNROOF OPE.	Ignition switch (IG1)	30	IG SW (IG1)	ON
	Response by the sunroof-ECU	72	S/R ECU ACK	INPUT CHECK (only momentarily when switch is operated)
REAR S/R LOCK	Ignition switch (IG1)	30	IG SW (IG1)	ON
	Buzzer	43	BUZZER	ON
	Response by the sunroof-ECU	72	S/R ECU ACK	BUZZER ACK

ETACS SWITCH DATA CHART

Item No.	Check items	Display on M.U.T.-III	Check conditions	Normal condition
01*	Specification switching terminal	Destination switch 1	OFF: Vehicles for Europe	OFF
02*	Specification switching terminal	Destination switch 2	ON: Vehicles for Europe	ON
03	Key reminder switch	Key reminder switch	Key reminder switch: ON (when the ignition key is pulled off)	ON
			Key reminder switch: OFF (Insert the ignition key)	OFF
04	Hazard warning lamp switch	Hazard lamp switch	Hazard warning lamp switch: ON (when the switch is operated)	ON
			Hazard warning lamp switch: ON (when the switch is not operated)	OFF
05	Passenger's door switch	Passenger’s door switch	Front passenger's door: open	ON
			Front passenger's door: Closed	OFF
07	Tailgate switch	Trunk or lift gate switch	Tailgate: OPEN	ON
			Tailgate: CLOSE	OFF

Main Index
Group TOC

Item No.	Check items	Display on M.U.T.-III	Check conditions	Normal condition
09	Rear wiper auto-stop switch	Rear wiper auto stop switch	When rear wiper is operating	ON
			When the rear wiper is not working	OFF
10	Front fog lamp switch	Front fog lamp switch	Front fog lamp switch: ON (when the switch is operated)	ON
			Front fog lamp switch: ON (when the switch is not operated)	OFF
12	Driver’s seatbelt switch	Driver’s seat belt switch	Seat belt switch: ON (when the seat belt is unfastened)	ON
			Seat belt switch: OFF (when the seat belt is fastened)	OFF
14	Electric remote-controlled door mirror (folding/unfolding) switch	Retractable mirror switch	Electric remote-controlled door mirror (folding/unfolding) switch: ON (when the switch is operated)	ON
			Electric remote-controlled door mirror (folding/unfolding) switch: ON (when the switch is not operated)	OFF
18	Tailgate key unlock switch	Trunk key unlock switch	Tailgate key unlock switch: ON (when the key is turned)	ON
			Tailgate key unlock switch: OFF	OFF
19	Tailgate key lock switch	Rear gate key lock switch	Tailgate key lock switch: ON (when the key is turned)	ON
			Tailgate key lock switch: OFF	OFF
21	Driver's door lock actuator lock switch	Dr door lock actuator lock SW	Driver's door: Locked	ON
			Driver's door: Other than "locked"	OFF
22	Driver's door lock actuator unlock switch	Dr door lock actuator unlock SW	Driver's door: Unlocked	ON
			Driver's door: Other than "Unlocked"	OFF
26	Central door locking	Center door lock switch	When the central door locking operates	ON
			When the central door locking does not operate	OFF
27	Central door unlock	Center door unlock switch	When the central door unlocking operates	ON
			When the central door unlocking does not operate	OFF
30	Tailgate lock release handle switch	Gate opener switch	Tailgate lock release handle switch: When being operated	ON
			Tailgate lock release handle switch: When not being operated	OFF
31	Room lamp "ON" switch	Room lamp ALL ON switch	Room lamp "ON" switch: ON	ON
			Room lamp "ON" switch: OFF	OFF
32	Room lamp "ON/OFF" switch	Room lamp ALL OFF switch	Room lamp "OFF" switch: ON	ON
			Room lamp "OFF" switch: OFF	OFF
35	DRL changeover terminal	Daytime running lamp switch	When DRL is equipped: ON	ON
			When DRL is not equipped: OFF	OFF

Main Index
Group TOC

Item No.	Check items	Display on M.U.T.-III	Check conditions	Normal condition
36	Diagnosis connector	M.U.T. diagnosis connector	Diagnosis control line: Earthed	ON
			Diagnosis control line: Not earthed	OFF
41	Rear door (RH) switch	Rear door (right side) switch	Rear door (RH): open	ON
			Rear door (RH): Closed	OFF
42	Rear door (LH) switch	Rear door (left side) switch	Rear door (LH): open	ON
			Rear door (LH): Closed	OFF
43	Front passenger's seat belt switch	Passenger's seat belt switch	Front passenger's seat belt switch: ON (when the seat is occupied but the seat belt is unfastened)	ON
			Front passenger's seat belt switch: OFF (when the seat belt is fastened)	OFF

*: Market can be changed by combination of item Nos. 01 and 02.

ETACS ANALOGUE DATA CHART

Item No.	Check items	Display on M.U.T.-III	How to check
02	Windshield intermittent wiper volume	Wiper int. time volume voltage	Displays the voltage in the windshield wiper intermittent volume. Changes in accordance with the position of the windshield wiper intermittent volume.
03	Vehicle speed signal	Vehicle speed	Displays the vehicle speed Changes in accordance with the vehicle speed.
04	Room lamp timer period	Room lamp auto-cut timer	Displays room lamp timer period.
05	Headlamp automatic shutdown timer period	Headlamp auto-cut timer	Displays headlamp automatic shutdown period (timing).
06	Power window key-off timer period	Power window delay timer	Displays power window key-off timer period (timing).
08	Windshield intermittent wiper interval	Wiper intermittent time	Displays windshield intermittent wiper interval (with chart) Changes according to the windshield wiper intermittent volume position and the vehicle speed.

PULSE CHECK

M1549015100465

⚠ CAUTION

Before connecting or disconnecting the M.U.T.-III, turn the ignition switch to the "LOCK" (OFF) position.

1. The input signals (signals other than communication line signals), which are compatible with the SWS monitor by using the M.U.T.-III or voltmeter, can be confirmed by the Pulse Check.

NOTE: If a problem is found in the "Pulse Check", refer to the Problems during Input Signal Check <Service data, function diagnosis or pulse check> (Refer to P.54C-37).

2. Use the M.U.T.-III or voltmeter to check the following input signals.

Main Index
Group TOC

SWITCHES WHICH ARE APPLICABLE TO INPUT SIGNAL CHECK, AND THEIR CHECK CONDITIONS

Input signal	Requirements for sounding buzzer
Inhibitor switch ("R" position)	When the ignition switch is turned ON and the selector lever is moved to the R position.

M.U.T.-III DRIVE RECORDER FUNCTION

M1549026000086

1. The SWS monitor cartridge memory can store the ECU check results, the service data, the communication data obtained by the function diagnosis. This communication data can be displayed as a chart or graphical form.
2. If data obtained by the drive recorder function has to be stored for long time, the data can be transferred to the SWS monitor cartridge. By doing this, you can disconnect the M.U.T.-III to prevent excessive battery drain.

   NOTE: For the details about the M.U.T.-III drive recorder function, refer to M.U.T.-III User's Manual.

DIAGNOSIS CODE CHART

M1549000700717

Diagnosis code No.	Diagnostic item	Reference page
01	Trouble in SWS communication line system or ETACS-ECU	P.54C-20
02	Communication error with column switch	P.54C-21
03	Communication error with front-ECU	P.54C-22
04*1	Communication error with sunroof-ECU	P.54C-23
05*2	Communication error with power window main switch	–
10	Bus off	P.54C-24
11	Engine-A/T-ECU <A/T> or engine-ECU <M/T> Time-out (related with the engine)	P.54C-25
12*3	Engine-A/T-ECU time-out (related to A/T)	P.54C-26
13	A/C-ECU time-out	P.54C-27
14	Meter time-out	P.54C-29
15*4	Centre display unit time-out	–
21	Meter failure information	P.54C-30

NOTE:

- **1: For vehicles without sunroof, diagnosis code No.4 does not mean that there is a problem.*
- **2: Diagnosis code No.05 does not mean that there is a problem.*
- **3: For M/T-vehicles, diagnosis code No.12 does not mean that there is a problem.*
- **4: Diagnosis code No.15 does not mean that there is a problem.*

Main Index
Group TOC

DIAGNOSTIC TROUBLE CODE PROCEDURES

Diagnosis code No.01 Trouble in SWS communication line system or ETACS-ECU

⚠ CAUTION
If diagnosis code No.01 is set in the ETACS-ECU, diagnose the CAN bus lines.

SWS Communication Line

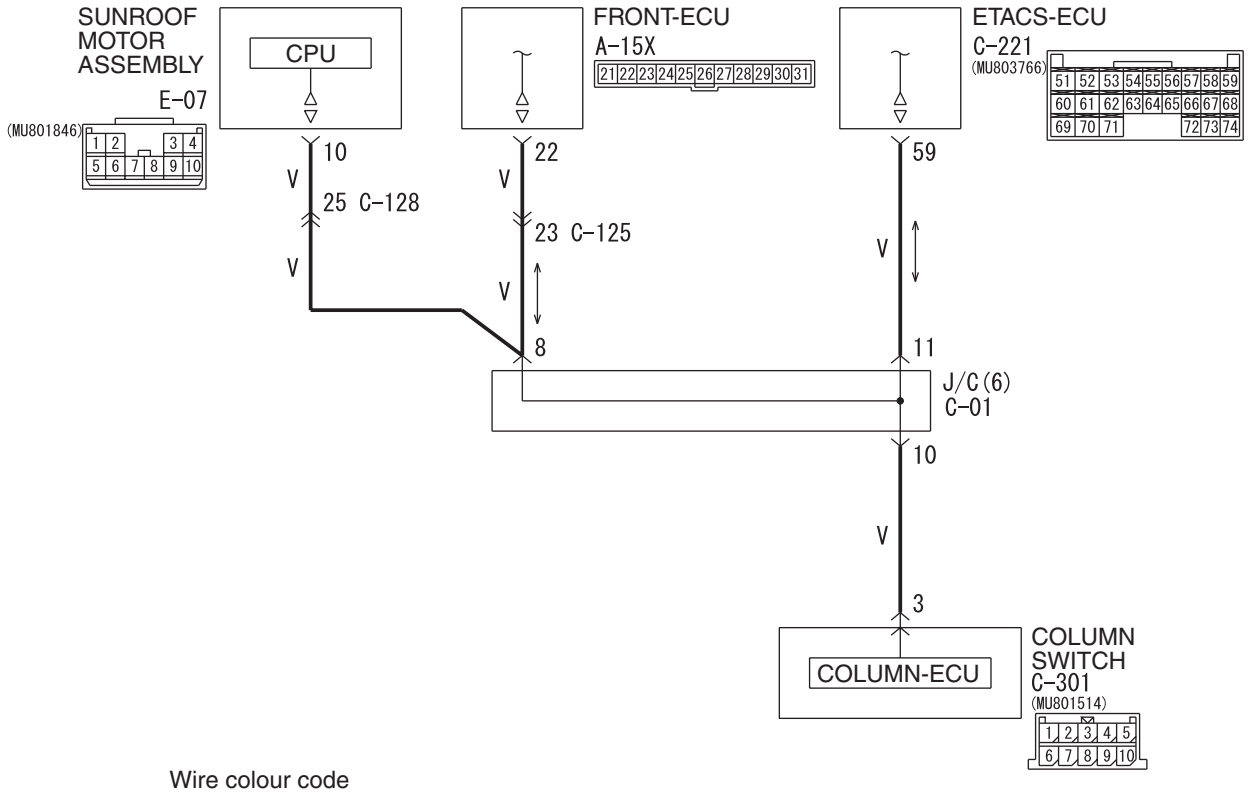

W6X54X033A

TROUBLE JUDGMENT

The ETACS-ECU communicates with the column switch, the front-ECU and the sunroof motor assembly through the SWS communication line. If there is any trouble in the ETACS-ECU or the SWS communication lines , diagnosis code No.01 will be set.

COMMENT ON TROUBLE SYMPTOM

The wiring harness wire or connectors may have loose, corroded, or damage terminals, or terminals pushed back in the connector, or the ETACS-ECU may be defective.

POSSIBLE CAUSES

- Malfunction of the ETACS-ECU
- Damaged harness wires and connectors

Main Index
Group TOC

DIAGNOSIS PROCEDURE

Step 1. M.U.T.-III CAN bus diagnostics
Use the M.U.T.-III to diagnose the CAN bus lines.

Q: Is the check result normal?
YES : Go to Step 2.
NO : Repair the CAN bus line (Refer to GROUP 54F – Troubleshooting P.54F-13).

Step 2. Check whether the diagnosis code is reset.
Check again if the diagnosis code is set.
(1) Ignition switch: LOCK (OFF) position to ON
(2) Erase the diagnosis code.
(3) On completion, check that the diagnosis code is not reset.

Q: Is the check result normal?
YES : If a trouble is solved, it is determined that there is an intermittent malfunction such as poor engaged connector(s) or open circuit (Refer to GROUP 00 – How to use troubleshooting/Inspection Service Points P.00-5).
NO : Go to Step 3.

Step 3. ECU check by using the SWS monitor
Check that the SWS communication lines are in good condition.
- Ignition switch: ON

ECUS TO BE CHECKED
- Column ECU
- ETACS-ECU
- Front ECU
- Sunroof-ECU

OK: "OK" are displayed for all the items

Q: Are the check result normal?
Normal conditions are displayed for all the items. : Intermittent malfunction (Refer to GROUP 00 – How to Use Troubleshooting/Inspection Service Points P.00-5).
"NG" is displayed on the "COLUMN ECU" menu. : Refer to Inspection Procedure A-2 "Communication with column switch (column-ECU) is impossible P.54C-45."
"NG" is displayed on the "ETACS ECU" menu. : Refer to Inspection Procedure A-3 "Communication with ETACS-ECU is impossible P.54C-51."
"NG" is displayed on the "FRONT ECU" menu. : Refer to Inspection Procedure A-4 "Communication with front-ECU is impossible P.54C-58."
"NG" is displayed on the "Sunroof ECU" menu. : Refer to Inspection Procedure A-5 "Communication with sunroof-ECU is impossible P.54C-63."

Diagnosis code No.02 Communication error with column switch

⚠ CAUTION
If diagnosis code No.02 is set in the ETACS-ECU, diagnose the CAN bus lines.

TROUBLE JUDGMENT
The ETACS-ECU communicates with the column switch through the SWS communication lines. If there is any trouble in that communication, diagnosis code No.02 will be set.

COMMENT ON TROUBLE SYMPTOM
The column switch, the ETACS-ECU, connector(s), or wiring harness between the two may be defective.

POSSIBLE CAUSES
- Malfunction of the column switch
- Malfunction of the ETACS-ECU
- Damaged harness wires and connectors

Main Index
Group TOC

DIAGNOSIS PROCEDURE

Step 1. M.U.T.-III CAN bus diagnostics
Use the M.U.T.-III to diagnose the CAN bus lines.

Q: Is the check result normal?
YES : Go to Step 2.
NO : Repair the CAN bus line (Refer to GROUP 54F – Troubleshooting P.54F-13).

Step 2.Check whether the diagnosis code is reset.
Check again if the diagnosis code is set.
(1) Erase the diagnosis code.
(2) Ignition switch: LOCK (OFF) position to ON
(3) On completion, check that the diagnosis code is not reset.

Q: Is the check result normal?
YES : If a trouble is solved, it is determined that there is an intermittent malfunction such as poor engaged connector(s) or open circuit (Refer to GROUP 00 – How to use troubleshooting/Inspection Service Points P.00-5).
NO : Go to Step 3.

Step 3. ECU check by using the SWS monitor
Check that the power supply and earth lines to the ETACS-ECU and the column switch (column-ECU) and the SWS communication lines are normal.
- Ignition switch: OFF

ECUS TO BE CHECKED
- Column ECU
- ETACS-ECU

OK: "OK" is displayed for all the items

Q: Are the check result normal?
Normal conditions are displayed for all the items. : The trouble can be an intermittent malfunction (Refer to GROUP 00 – How to Cope with Intermittent Malfunction P.00-5).
"NG" is displayed on the "COLUMN ECU" menu. : Refer to Inspection Procedure A-2 "Communication with column switch (column-ECU) is impossible P.54C-45."
"NG" is displayed on the "ETACS ECU" menu. : Refer to Inspection Procedure A-3 "Communication with ETACS-ECU is impossible P.54C-51."

Diagnosis code No.03 Communication error with front-ECU

⚠ CAUTION
If diagnosis code No.03 is set in the ETACS-ECU, diagnose the CAN bus lines.

TROUBLE JUDGMENT
The ETACS-ECU communicates with the front-ECU through the SWS communication line. If there is any trouble in that communication, diagnosis code No.03 will be set.

COMMENTS ON TROUBLE SYMPTOM
The front-ECU, the ETACS-ECU, connector(s), or wiring harness between the two may be defective.

POSSIBLE CAUSES
- Malfunction of the front ECU
- Malfunction of the ETACS-ECU
- Damaged harness wires and connectors

DIAGNOSIS PROCEDURE

Step 1. M.U.T.-III CAN bus diagnostics
Use the M.U.T.-III to diagnose the CAN bus lines.

Q: Is the check result normal?
YES : Go to Step 2.
NO : Repair the CAN bus line (Refer to GROUP 54F – Troubleshooting P.54F-13).

Main Index
Group TOC

Step 2. Check whether the diagnosis code is reset.

Check again if the diagnosis code is set.
(1) Erase the diagnosis code.
(2) Ignition switch: LOCK (OFF) position to ON
(3) On completion, check that the diagnosis code is not reset.

Q: Is the check result normal?
YES : If a trouble is solved, it is determined that there is an intermittent malfunction such as poor engaged connector(s) or open circuit (Refer to GROUP 00 – How to use troubleshooting/Inspection Service Points P.00-5).
NO : Go to Step 3.

Step 3. ECU check by using the SWS monitor

Check that the power supply and earth lines to the ETACS-ECU and the front-ECU and the SWS communication lines are normal.
- Ignition switch: OFF

ECUS TO BE CHECKED
- Front ECU
- ETACS-ECU

OK: "OK" are displayed for all the items

Q: Are the check result normal?
Normal conditions are displayed for all the items. : Intermittent malfunction (Refer to GROUP 00 – How to Use Troubleshooting/Inspection Service Points P.00-5).
"NG" is displayed on the "FRONT ECU" menu. : Refer to Inspection Procedure A-4 "Communication with front-ECU is impossible P.54C-58."
"NG" is displayed on the "ETACS ECU" menu. : Refer to Inspection Procedure A-3 "Communication with ETACS-ECU is impossible P.54C-51."

Diagnosis code No.04 Communication error with sunroof-ECU

⚠ CAUTION
If diagnosis code No.04 is set in the ETACS-ECU, diagnose the CAN bus lines.

TROUBLE JUDGMENT

The ETACS-ECU communicates with the sunroof motor assembly (sunroof-ECU) through the SWS communication line. If there is any trouble in that communication, diagnosis code No.04 will be set.

NOTE: For vehicles without sunroof, diagnosis code No.04 does not mean that there is a problem.

COMMENTS ON TROUBLE SYMPTOM

The sunroof motor assembly (sunroof-ECU), the ETACS-ECU, connector(s), or wiring harness between the two may be defective.

POSSIBLE CAUSES

- Malfunction of the sunroof motor assembly (snuroof-ECU)
- Malfunction of the ETACS-ECU
- Damaged harness wires and connectors

DIAGNOSIS PROCEDURE

Step 1. M.U.T.-III CAN bus diagnostics

Use the M.U.T.-III to diagnose the CAN bus lines.

Q: Is the check result normal?
YES : Go to Step 2.
NO : Repair the CAN bus line (Refer to GROUP 54F – Troubleshooting P.54F-13).

Step 2.Check whether the diagnosis code is reset.

Check again if the diagnosis code is set.
(1) Erase the diagnosis code.
(2) Ignition switch: LOCK (OFF) position to ON
(3) On completion, check that the diagnosis code is not reset.

Q: Is the check result normal?
YES : If a trouble is solved, it is determined that there is an intermittent malfunction such as poor engaged connector(s) or open circuit (Refer to GROUP 00 – How to use troubleshooting/Inspection Service Points P.00-5).
NO : Go to Step 3.

Main Index
Group TOC

Step 3. ECU check by using the SWS monitor
Check that the power supply and earth lines to the ETACS-ECU and the sunroof motor assembly (sunroof-ECU) and the SWS communication lines are normal.
- Ignition switch: OFF

ECUS TO BE CHECKED
- Sunroof ECU
- ETACS-ECU

OK: "OK" are displayed for all the items

Q: Are the check result normal?
Normal conditions are displayed for all the items. : Intermittent malfunction (Refer to GROUP 00 – How to Use Troubleshooting/Inspection Service Points P.00-5).
"NG" is displayed on the "SUNROOF ECU" menu. : Refer to Inspection Procedure A-5 "Communication with sunroof motor assembly (sunroof-ECU) is impossible P.54C-63."
"NG" is displayed on the "ETACS ECU" menu. : Refer to Inspection Procedure A-3 "Communication with ETACS-ECU is impossible P.54C-51."

Diagnosis code No.10 Bus off

⚠ CAUTION
If diagnosis code No.10 is set in the ETACS-ECU, diagnose the CAN bus lines.

⚠ CAUTION
Whenever the ECU is replaced, ensure that the input and output signal circuits are normal.

TROUBLE JUDGMENT
Diagnosis code No.10 will be stored when the ETACS-ECU ceases CAN communication (bus off) and then resumes the communication by turning the ignition switch to the "LOCK" (OFF) position.

COMMENTS ON TROUBLE SYMPTOM
The wiring harness wire or connectors may have loose, corroded, or damage terminals, or terminals pushed back in the connector, or the SWS communication lines may be defective.

POSSIBLE CAUSES
Damaged harness wires and connectors

DIAGNOSTIC PROCEDURE

Step 1. M.U.T.-III CAN bus diagnostics
Use the M.U.T.-III to diagnose the CAN bus lines.

Q: Is the check result normal?
YES : Go to Step 2.
NO : Repair the CAN bus line (Refer to GROUP 54F – Troubleshooting P.54F-13). Repair the CAN bus line and go to Step 3.

Step 2. Check whether the diagnosis code is reset.
Check again if the diagnosis code is set.
(1) Erase the diagnosis code.
(2) Ignition: LOCK (OFF) position to ON
(3) On completion, check that the diagnosis code is not reset.

Q: Is the check result normal?
YES : If a trouble is solved, it is determined that there is an intermittent malfunction such as poor engaged connector(s) or open circuit (Refer to GROUP 00 – How to use troubleshooting/Inspection Service Points P.00-5).
NO : Replace the ETACS-ECU, and then go to Step 3.

Step 3. Check whether the diagnosis code is reset.
Recheck if the diagnosis code is set.
(1) Erase the diagnosis code.
(2) Ignition switch: LOCK (OFF) position to ON
(3) Check if the diagnosis code is set.

Q: Is the check result satisfactory?
YES : The procedure is complete.
NO : Return to Step 1.

Diagnosis code No.11 Engine-A/T-ECU <A/T> or engine-ECU <M/T> Time-out (related with the engine)

⚠ CAUTION
If diagnosis code No.11 is set in the ETACS, diagnose the CAN main bus line.

⚠ CAUTION
Whenever the ECU is replaced, ensure that the communication circuit is normal.

TROUBLE JUDGMENT

- The ETACS-ECU receives engine control signals from the engine-A/T-ECU <A/T> or the engine-ECU <M/T> through the CAN bus lines. If the ECU can not receive the engine control system-related signal at all, diagnosis code No.11 will be set.

COMMENTS ON TROUBLE SYMPTOM

Current trouble

- Connector(s) or wiring harness in the CAN bus lines between the ETACS-ECU and the engine-A/T-ECU <A/T> or the engine-ECU <M/T>, the power supply circuits to these ECUs, or the ETACS-ECU itself may be defective.

Past trouble

- If diagnosis code No.11 is set as past trouble, carry out diagnosis with particular emphasis on wiring and connector(s) in the CAN bus lines between the ETACS-ECU and the engine-A/T-ECU <A/T> or the engine-ECU <M/T>, or power supply to the engine-A/T-ECU <A/T> or the engine-ECU <M/T>. For diagnosis procedures, refer to "How to treat past trouble" (Refer to GROUP 00 – How to Use Troubleshooting/Inspection Service Points P.00-5).

NOTE: For a past trouble, you can not find it by the M.U.T.-III CAN bus diagnostics even if there is any failure in CAN bus lines. In this case, refer to GROUP 00, How to Use Troubleshooting/Inspection Service Points P.00-5 and check the CAN bus lines. You can narrow down the possible cause of the trouble by referring to the diagnosis code, which is set regarding the CAN communication-linked ECUs (Refer to GROUP 54F – CAN Bus Line Diagnostic Flow P.54F-7).

POSSIBLE CAUSES

- Malfunction of the engine-A/T-ECU <A/T> or engine-ECU <M/T>
- Malfunction of the ETACS-ECU
- Malfunction of the CAN bus

DIAGNOSTIC PROCEDURE

Step 1. M.U.T.-III CAN bus diagnostics
Use the M.U.T.-III to diagnose the CAN bus lines.

Q: Is the check result normal?
YES : Go to Step 2.
NO : Repair the CAN bus line (Refer to GROUP 54F – Troubleshooting P.54F-13). Repair the CAN bus line and go to Step 6.

Step 2. Check for engine control diagnosis code.
Check that the engine control system sets a diagnosis code.

Q: Is the check result normal?
YES : Go to Step 3.
NO : Engine (Refer to GROUP 13A – Troubleshooting P.13A-14).

Step 3. M.U.T.-III diagnosis code
Check if a diagnosis code, which relates to CAN communication-linked systems below, is set.

- Combination meter

U1100: Engine-related time-out diagnosis code

- A/C-ECU

U1100: Engine-related time-out diagnosis code

Q: Is the check result normal?
YES : Go to Step 5.
NO : Go to Step 4.

Step 4. Check whether the diagnosis code is reset.
Check again if the diagnosis code is set.
(1) Erase the diagnosis code.
(2) Ignition switch: LOCK (OFF) position to ON
(3) On completion, check that the diagnosis code is not reset.

Q: Is the check result normal?
YES : A poor connection, open circuit or other intermittent malfunction is present in the CAN bus lines between the engine-A/T-ECU <A/T> or the engine-ECU <M/T> and the ETACS-ECU (Refer to GROUP 00 – How to Use Troubleshooting/Inspection Service Points P.00-5).
NO : Replace the engine-A/T-ECU <A/T> or engine-ECU <M/T), and then go to Step 6.

Main Index
Group TOC

Step 5. Check whether the diagnosis code is reset.

Check again if the diagnosis code is set.
(1) Erase the diagnosis code.
(2) Ignition switch: LOCK (OFF) position to ON
(3) On completion, check that the diagnosis code is not reset.

Q: Is the check result normal?

YES : A poor connection, open circuit or other intermittent malfunction is present in the CAN bus lines between the engine-A/T-ECU <A/T> or the engine-ECU <M/T> and the ETACS-ECU (Refer to GROUP 00 – How to Use Troubleshooting/Inspection Service Points P.00-5).

NO : Replace the ETACS-ECU, and then go to Step 6.

Step 6. Check whether the diagnosis code is reset.

Recheck if the diagnosis code is set.
(1) Erase the diagnosis code.
(2) Ignition switch: LOCK (OFF) position to ON
(3) On completion, check that the diagnosis code is not reset.

Q: Is the check result normal?

YES : The procedure is complete.

NO : Return to Step 1.

Diagnosis code No.12 Engine-A/T-ECU time-out (related to A/T)

⚠ CAUTION

If diagnosis code No.12 is set in the ETACS, diagnose the CAN main bus line.

⚠ CAUTION

Whenever the ECU is replaced, ensure that the communication circuit is normal.

TROUBLE JUDGMENT

- The ETACS-ECU receives transmission control-related signals from the engine-A/T-ECU via the CAN bus lines. If the ECU cannot receive the transmission control signal at all, diagnosis code No.12 will be set.

NOTE: For M/T-vehicles, diagnosis code No.12 does not mean that there is a problem.

COMMENTS ON TROUBLE SYMPTOM

Current trouble

- Connector(s) or wiring harness in the CAN bus lines between the ETACS-ECU and the engine-A/T-ECU, the power supply system to the engine-A/T-ECU, or the ETACS-ECU itself may be defective.

Past trouble

- If diagnosis code No.12 is stored as a past trouble, carry out diagnosis with particular emphasis on wiring and connector(s) in the CAN bus line between the ETACS-ECU and the engine-A/T-ECU, and the power supply system to the engine-A/T-ECU. For diagnosis procedures, refer to "How to treat past trouble" (Refer to GROUP 00 – How to Use Troubleshooting/Inspection Service Points P.00-5).

NOTE: For a past trouble, you can not find it by the M.U.T.-III CAN bus diagnostics even if there is any failure in CAN bus lines. In this case, refer to GROUP 00, How to Use Troubleshooting/Inspection Service Points P.00-5 and check the CAN bus lines. You can narrow down the possible cause of the trouble by referring to the diagnosis code, which is set regarding the CAN communication-linked ECUs (Refer to GROUP 54F – CAN Bus Line Diagnostic Flow P.54F-7).

POSSIBLE CAUSES

- Malfunction of the engine-A/T-ECU
- Malfunction of the ETACS-ECU
- Malfunction of the CAN bus

Main Index
Group TOC

DIAGNOSTIC PROCEDURE

Step 1. M.U.T.-III CAN bus diagnostics
Use the M.U.T.-III to diagnose the CAN bus lines.

Q: Is the check result normal?
YES : Go to Step 2.
NO : Repair the CAN bus line (Refer to GROUP 54F – Troubleshooting P.54F-13). Repair the CAN bus line and go to Step 6.

Step 2. Check for A/T control-related diagnosis code.
Check if an A/T system diagnosis code is set.

Q: Is the check result normal?
YES : Go to Step 3.
NO : Diagnose A/T (Refer to GROUP 23A – Troubleshooting P.23A-17).

Step 3. M.U.T.-III diagnosis code
Check if a diagnosis code, which relates to CAN communication-linked systems below, is set.
- Combination meter

U1101: Engine-related time-out diagnosis code

Q: Is the check result normal?
YES : Go to Step 5.
NO : Go to Step 4.

Step 4. Check whether the diagnosis code is reset.
Check again if the diagnosis code is set.
(1) Erase the diagnosis code.
(2) Ignition switch: LOCK (OFF) position to ON
(3) On completion, check that the diagnosis code is not reset.

Q: Is the check result normal?
YES : A poor connection, open circuit or other intermittent malfunction is present in the CAN bus lines between the engine-A/T-ECU and the ETACS-ECU (Refer to GROUP 00 – How to Use Troubleshooting/Inspection Service Points P.00-5).
NO : Replace the engine-A/T-ECU, and then go to Step 6.

Step 5. Check whether the diagnosis code is reset.
Check again if the diagnosis code is set.
(1) Erase the diagnosis code.
(2) Ignition switch: LOCK (OFF) position to ON
(3) On completion, check that the diagnosis code is not reset.

Q: Is the check result normal?
YES : A poor connection, open circuit or other intermittent malfunction is present in the CAN bus lines between the engine-A/T-ECU and the ETACS-ECU (Refer to GROUP 00 – How to Use Troubleshooting/Inspection Service Points P.00-5).
NO : Replace the ETACS-ECU, and then go to Step 6.

Step 6. Check whether the diagnosis code is reset.
Recheck if the diagnosis code is set.
(1) Erase the diagnosis code.
(2) Ignition switch: LOCK (OFF) position to ON
(3) On completion, check that the diagnosis code is not reset.

Q: Is the check result normal?
YES : The procedure is complete.
NO : Return to Step 1.

Diagnosis code No.13 A/C-ECU time-out

⚠ CAUTION
If diagnosis code No.13 is set in the ETACS-ECU, diagnose the CAN bus lines.

⚠ CAUTION
Whenever the ECU is replaced, ensure that the input and output signal circuits are normal.

TROUBLE JUDGMENT

The ETACS-ECU receives air conditioner system-related signal from the A/C-ECU. If air conditioner control system-related signal can not be received at all, diagnosis code No.13 will be set.

Main Index
Group TOC

COMMENT ON TROUBLE SYMPTOM

Current trouble

- Connector(s) or wiring harness in the CAN bus lines between the A/C-ECU and the ETACS-ECU, the power supply system to the combination meter, the combination meter itself, or the ETACS-ECU may be defective.

Past trouble

- If diagnosis code No.13 is stored as a past trouble, carry out diagnosis with particular emphasis on wiring and connector(s) in the CAN bus line between the ETACS-ECU and the A/C-ECU, and the power supply system to the A/C-ECU. For diagnosis procedures, refer to "How to treat past trouble" (Refer to GROUP 00 – How to Use Troubleshooting/Inspection Service Points P.00-5).

NOTE: For a past trouble, you can not find it by the M.U.T.-III CAN bus diagnostics even if there is any failure in CAN bus lines. In this case, refer to GROUP 00, How to Use Troubleshooting/Inspection Service Points P.00-5 and check the CAN bus lines. You can narrow down the possible cause of the trouble by referring to the diagnosis code, which is set regarding the CAN communication-linked ECUs (Refer to GROUP 54F – CAN Bus Line Diagnostic Flow P.54F-7).

POSSIBLE CAUSES

- Malfunction of the A/C-ECU
- Malfunction of the ETACS-ECU
- Damaged harness wires and connectors

DIAGNOSIS PROCEDURE

Step 1. M.U.T.-III CAN bus diagnostics

Use the M.U.T.-III to diagnose the CAN bus lines.

Q: Is the check result normal?

YES : Go to Step 2.

NO : Repair the CAN bus line (Refer to GROUP 54F – Troubleshooting P.54F-13). Repair the CAN bus line and go to Step 5.

Step 2. M.U.T.-III diagnosis code

Check if an A/C-ECU diagnosis code is set.

Q: Is the diagnosis code set?

YES : Diagnose the A/C-ECU (Refer to GROUP 55 – Troubleshooting P.55-8).

NO : Go to Step 3.

Step 3. Check whether the diagnosis code is reset.

Check again if the diagnosis code is set.

(1) Erase the diagnosis code.
(2) Ignition switch: ON → LOCK (OFF) → ON
(3) On completion, check that the diagnosis code is not reset.

Q: Is the check result normal?

YES : A poor connection, open circuit or other intermittent malfunction is present in the CAN bus lines between the A/C-ECU and the ETACS-ECU (Refer to GROUP 00 – How to Use Troubleshooting/Inspection Service Points P.00-5).

NO : Replace the A/C-ECU, and then go to Step 4.

Step 4. Check whether the diagnosis code is reset.

Check again if the diagnosis code is set.

(1) Erase the diagnosis code.
(2) Ignition switch: ON → LOCK (OFF) → ON
(3) On completion, check that the diagnosis code is not reset.

Q: Is the check result normal?

YES : A poor connection, open circuit or other intermittent malfunction is present in the CAN bus lines between the A/C-ECU and the ETACS-ECU (Refer to GROUP 00 – How to Use Troubleshooting/Inspection Service Points P.00-5).

NO : Replace the ETACS-ECU, and then go to Step 5.

Step 5. Check whether the diagnosis code is reset.

Recheck if the diagnosis code is set.

(1) Erase the diagnosis code.
(2) Ignition switch: ON → LOCK (OFF) → ON
(3) On completion, check that the diagnosis code is not reset.

Q: Is the check result normal?

YES : The procedure is complete.

NO : Return to Step 1.

Main Index
Group TOC

Diagnosis code No.14 Meter time-out

⚠ CAUTION
If diagnosis code No.14 is set in the ETACS-ECU, diagnose the CAN bus lines.

⚠ CAUTION
Whenever the ECU is replaced, ensure that the input and output signal circuits are normal.

TROUBLE JUDGMENT

The ETACS-ECU receives combination meter-related signal from the combination meter. If meter-related signal can not be received at all, diagnosis code No.14 will be set.

COMMENT ON TROUBLE SYMPTOM

Current trouble

- Connector(s) or wiring harness in the CAN bus lines between the combination meter and the ETACS-ECU, the power supply system to the combination meter, the combination meter itself, or the ETACS-ECU may be defective.

Past trouble

- If diagnosis code No.14 is stored as a past trouble, carry out diagnosis with particular emphasis on wiring and connector(s) in the CAN bus line between the combination meter and the ETACS-ECU, and the power supply system to the combination meter. For diagnosis procedures, refer to "How to treat past trouble" (Refer to GROUP 00 – How to Use Troubleshooting/Inspection Service Points P.00-5).

NOTE: For a past trouble, you can not find it by the M.U.T.-III CAN bus diagnostics even if there is any failure in CAN bus lines. In this case, refer to GROUP 00, How to Use Troubleshooting/Inspection Service Points P.00-5 and check the CAN bus lines. You can narrow down the possible cause of the trouble by referring to the diagnosis code, which is set regarding the CAN communication-linked ECUs (Refer to GROUP 54F – CAN Bus Line Diagnostic Flow P.54F-7).

POSSIBLE CAUSES

- Malfunction of the combination meter
- Malfunction of the ETACS-ECU
- Damaged harness wires and connectors

DIAGNOSIS PROCEDURE

Step 1. M.U.T.-III CAN bus diagnostics
Use the M.U.T.-III to diagnose the CAN bus lines.

Q: Is the check result normal?
YES : Go to Step 2.
NO : Repair the CAN bus line (Refer to GROUP 54F – Troubleshooting P.54F-13). Repair the CAN bus line and go to Step 6.

Step 2. M.U.T.-III diagnosis code
Check whether the combination meter-related diagnosis code is set.

Q: Is the diagnosis code set?
YES : Diagnose the combination meter (Refer to GROUP 54A – Troubleshooting P.54A-55).
NO : Go to Step 3.

Step 3. M.U.T.-III diagnosis code
Check if a diagnosis code, which relates to CAN communication-linked systems below, is set.

- Engine

U1108: Combination meter time-out diagnosis code

Q: Is the diagnosis code set?
YES : Go to Step 4.
NO : Go to Step 5.

Step 4. Check whether the diagnosis code is reset.
Check again if the diagnosis code is set.
(1) Erase the diagnosis code.
(2) Ignition switch: LOCK (OFF) position to ON
(3) On completion, check that the diagnosis code is not reset.

Q: Is the check result normal?
YES : A poor connection, open circuit or other intermittent malfunction is present in the CAN bus lines between the combination meter and the ETACS-ECU (Refer to GROUP 00 – How to Use Troubleshooting/Inspection Service Points P.00-5).
NO : Replace the combination meter, and then go to Step 6.

Main Index
Group TOC

Step 5. Check whether the diagnosis code is reset.

Check again if the diagnosis code is set.
(1) Erase the diagnosis code.
(2) Ignition switch: LOCK (OFF) position to ON
(3) On completion, check that the diagnosis code is not reset.

Q: Is the check result normal?
YES : A poor connection, open circuit or other intermittent malfunction is present in the CAN bus lines between the combination meter and the ETACS-ECU (Refer to GROUP 00 – How to Use Troubleshooting/Inspection Service Points P.00-5).
NO : Replace the ETACS-ECU, and then go to Step 6.

Step 6. Check whether the diagnosis code is reset.

Recheck if the diagnosis code is set.
(1) Erase the diagnosis code.
(2) Ignition switch: LOCK (OFF) position to ON
(3) On completion, check that the diagnosis code is not reset.

Q: Is the check result normal?
YES : The procedure is complete.
NO : Return to Step 1.

Diagnosis code No.21 Meter failure information

⚠ CAUTION
If diagnosis code No.21 is set in the ETACS-ECU, diagnose the CAN bus lines.

⚠ CAUTION
Whenever the ECU is replaced, ensure that the input and output signal circuits are normal.

TROUBLE JUDGMENT

The ETACS-ECU receives vehicle speed-related signal from the combination meter via the CAN bus lines. If failure information is sent to the vehicle speed-related signal, diagnosis code No.21 will be set.

COMMENT ON TROUBLE SYMPTOM

Current trouble

- Connector(s) or wiring harness in the CAN bus lines, the engine-A/T-ECU <A/T> or the engine-ECU <M/T>, the combination meter, the ETACS-ECU or the output shaft speed sensor may be defective.

Past trouble

- If diagnosis code 21 is stored as a past trouble, carry out diagnosis with particular emphasis on wiring and connector(s) between the engine-A/T-ECU <A/T> or engine-ECU <M/T> and the output shaft speed sensor. For diagnosis procedures, refer to "How to treat past trouble" (Refer to GROUP 00 – How to Use Troubleshooting/Inspection Service Points P.00-5).

POSSIBLE CAUSES

- Malfunction of the engine-A/T-ECU <A/T> or engine-ECU <M/T>
- Defective combination meter
- Malfunction of the ETACS-ECU

DIAGNOSIS PROCEDURE

Step 1. M.U.T.-III CAN bus diagnostics

Use the M.U.T.-III to diagnose the CAN bus lines.

Q: Is the check result normal?
YES : Go to Step 2.
NO : Repair the CAN bus line (Refer to GROUP 54F – Troubleshooting P.54F-13). Repair the CAN bus line and go to Step 6.

Step 2. M.U.T.-III diagnosis code

Check whether the combination meter-related diagnosis code is set.

Q: Is the diagnosis code set?
YES : Diagnose the combination meter (Refer to GROUP 54A – Troubleshooting P.54A-55).
NO : Go to Step 3.

Main Index
Group TOC

Step 3. M.U.T.-III diagnosis code

Check if a diagnosis code, which relates to CAN communication-linked systems below, is set.

- Multi-centre display

U1113: Combination meter failure information diagnosis code

Q: Is the diagnosis code set?

YES : Go to Step 4.
NO : Go to Step 5.

Step 4. Check whether the diagnosis code is reset.

Check again if the diagnosis code is set.
(1) Erase the diagnosis code.
(2) Ignition switch: LOCK (OFF) position to ON
(3) On completion, check that the diagnosis code is not reset.

Q: Is the check result normal?

YES : A poor connection, open circuit or other intermittent malfunction is present in the CAN bus lines between the engine-A/T-ECU <A/T> or the engine-ECU <M/T> and the output shaft speed sensor (Refer to GROUP 00 – How to Use Troubleshooting/Inspection Service Points P.00-5).
NO : Replace the combination meter, and then go to Step 6.

Step 5. Check whether the diagnosis code is reset.

Recheck if the diagnosis code is set.
(1) Erase the diagnosis code.
(2) Ignition switch: LOCK (OFF) position to ON
(3) On completion, check that the diagnosis code is not reset.

Q: Is the check result normal?

YES : A poor connection, open circuit or other intermittent malfunction is present in the CAN bus lines between the engine-A/T-ECU <A/T> or the engine-ECU <M/T> and the output shaft speed sensor (Refer to GROUP 00 – How to Use Troubleshooting/Inspection Service Points P.00-5).
NO : Replace the ETACS-ECU, and then go to Step 6.

Step 6. Check whether the diagnosis code is reset.

Recheck if the diagnosis code is set.
(1) Erase the diagnosis code.
(2) Ignition switch: LOCK (OFF) position to ON
(3) On completion, check that the diagnosis code is not reset.

Q: Is the check result normal?

YES : The procedure is complete.
NO : Return to Step 1.

Main Index
Group TOC

TROUBLE SYMPTOM CHART

M1549000801814

Symptom	Inspection procedure number	Reference page
Communication with the SWS monitor is not possible.	A-1	P.54C-41
Communication with the column switch (column-ECU) is not possible.	A-2	P.54C-45
Communication with the ETACS-ECU is not possible.	A-3	P.54C-51
Communication with the front-ECU is not possible.	A-4	P.54C-58
Communication with the sunroof motor assembly (sunroof-ECU) is not possible.	A-5	P.54C-63

<FUNCTION SYSTEM>

Symptom		Inspection procedure number	Reference page
Alarm Function	Lamp reminder buzzer function does not work normally.	B-1	P.54C-70
	Seat belt warning buzzer function does not work normally. <Vehicles for GCC>	B-2	P.54C-72
	Seat belt warning buzzer function does not work normally. <Vehicles for Australia and New Zealand>		P.54C-73
	Door-ajar warning buzzer function does not work.	B-3	P.54C-75
	Turn-signal lamp operation sound function does not work normally.	B-4	P.54C-77
	Ignition key reminder buzzer function does not work. <Vehicles for GCC only>	B-5	P.54C-78
	The speed alarm buzzer does not work. <Vehicles for GCC only>	B-6	P.54C-80
Central door locking	Central door locking system does not work.	C-1	P.54C-81
	The central door locking system does not function by using the driver's door lock switch.	C-2	P.54C-84
	The central door locking system does not function by using the passenger's door key cylinder.	C-3	P.54C-86
	The central door locking system does not function by using the tailgate key cylinder.	C-4	P.54C-88
	The ignition key reminder function does not work normally. <Vehicles with keyless entry system>	C-5	P.54C-89
	A door can not be locked or unlocked by the central door locking system. <LH drive vehicles>	C-6	P.54C-91
	A door can not be locked or unlocked by the central door locking system. <RH drive vehicles>		P.54C-97
	The tailgate cannot be opened or closed.	C-7	P.54C-103

Main Index
Group TOC

Symptom		Inspection procedure number	Reference page
Power window	Power windows do not work at all.	D-1	P.54C-106
	Driver's power window does not work by means of the power window main switch. <LH drive vehicles>	D-2	P.54C-116
	Driver's power window does not work by means of the power window main switch. <RH drive vehicles>		P.54C-118
	Relevant power window(s) do not work by means of the front and rear power window sub switches.	D-3	P.54C-120
	Passenger's and/or rear power window(s) do not work by means of the power window main switch.	D-4	P.54C-136
	The window glass lowers automatically while it is rising.	D-5	P.54C-139
	The power window timer function does not work normally. <Vehicles for Australia and New Zealand>	D-6	P.54C-140
	The power window timer function does not work normally. <Except vehicles for Australia and New Zealand>		P.54C-141
Keyless entry system	Keyless entry system does not work.	E-1	P.54C-142
	Keyless entry hazard lamp answerback function or the room lamp answerback function does not work normally.	E-2	P.54C-144
	Encrypted code cannot be registered.	E-3	P.54C-145
	The timer lock function does not work after the doors have been unlocked by the keyless entry system.	E-4	P.54C-146
	Multimode keyless entry system function does not work at all.	E-5	P.54C-147
Sunroof	The sunroof does not work at all.	F-1	P.54C-148
	Any of the sunroof switch positions is defective.	F-2	P.54C-150
	Sunroof timer function does not work normally. <Vehicles for Australia and New Zealand>	F-3	P.54C-151
	Sunroof timer function does not work normally. <Except vehicles for Australia and New Zealand>		P.54C-154
	The sunroof inhibition function does not work normally (The sunroof operation lock warning buzzer does not sound).	F-4	P.54C-156
	Sunroof anti-trap function does not work normally.	F-5	P.54C-160

Main Index
Group TOC

Symptom		Inspection procedure number	Reference page
Windshield wiper and washer	The windshield wipers does not work at all.	G-1	P.54C-161
	The windshield wipers does not work when the wiper switch is at "INT", "WASHER" or "MIST" position. However, the wipers work at low speed when the switch is at "LO" and "HI" position.	G-2	P.54C-165
	The windshield wipers do not stop at the specified park position.	G-3	P.54C-166
	The windshield wipers does not work normally.	G-4	P.54C-170
	The intermittent wiper interval can not be adjusted by operating the windshield intermittent wiper volume control.	G-5	P.54C-173
	The intermittent wiper interval is not changed according to the vehicle speed.	G-6	P.54C-174
	The windshield washer does not work.	G-7	P.54C-176
Rear wiper and washer	The rear wiper does not work at all.	H-1	P.54C-180
	The rear wiper does not stop at the specified park position.	H-2	P.54C-184
	When the selector lever is moved to "R" position during the rear wiper operation, the rear wiper does not operate at the continuous mode. <A/T>	H-3	P.54C-189
	When the shift lever is moved to "R" position during the rear wiper operation, the rear wiper does not operate at the continuous mode. <M/T>		P.54C-190
	The rear washer does not work.	H-4	P.54C-191
Electric retractable remote controlled door mirror	Electric retractable remote controlled door mirror does not work at all.	I-1	P.54C-195
	Left or right side electric retractable remote controlled door mirror does not work at all.	I-2	P.54C-199
	Electric retractable remote controlled door mirror timer function does not at all.	I-3	P.54C-206
	Vehicle speed-dependent unfolding function does not work normally.	I-4	P.54C-207
Ignition key cylinder illumination lamp	The ignition key cylinder illumination lamp does not illuminate/extinguish normally.	J-1	P.54C-209
Seat belt warning lamp	The seat belt warning lamp does not flash normally. <Vehicles for GCC>	K-1	P.54C-213
	The seat belt warning lamp does not flash normally. <Vehicles for Australia and New Zealand>		P.54C-215

Main Index
Group TOC

Symptom		Inspection procedure number	Reference page
Headlamp and tail lamp	The tail/stop lamps do not illuminate normally.	L-1	P.54C-217
	The low-beam headlamps do not illuminate normally.	L-2	P.54C-219
	The high-beam headlamps do not illuminate normally.	L-3	P.54C-222
	The high-beam and low-beam headlamps do not illuminate when the passing switch is operated.	L-4	P.54C-223
	The headlamp automatic-shutdown function does not work normally.	L-5	P.54C-224
	Any of tail lamps, position lamps or licence plate lamp does not illuminate.	L-6	P.54C-227
	The headlamp(s) do not illuminate.	L-7	P.54C-234
	The high-beam indicator lamp does not illuminate.	L-8	P.54C-239
	The headlamps do not illuminate when the lamping switch is at "TAIL" or "PASSING" position, but illuminate only at low beam when the switch is at "HEAD" position. However, the headlamps do not illuminate at high beam.	L-9	P.54C-240
Flasher timer	The turn-signal lamps do not illuminate.	M-1	P.54C-241
	The hazard warning lamps do not illuminate.	M-2	P.54C-245
	Any of the turn-signal lamps does not illuminate.	M-3	P.54C-247
	The turn-signal indicator lamp does not illuminate.	M-4	P.54C-261
Fog lamp	The front fog lamps do not illuminate normally.	N-1	P.54C-263
	Any of the front fog lamps does not illuminate normally.	N-2	P.54C-267
	The front fog lamps indicator does not illuminate normally.	N-3	P.54C-270

Main Index
Group TOC

Symptom		Inspection procedure number	Reference page
Interior lamp	The interior lamps (room ramp, rear personal lamps, door lamps, luggage compartment lamp, key illumination lamp) does not illuminate or extinguish normally.	O-1	P.54C-271
	The room lamp does not illuminate normally. <Vehicles with keyless entry system>	O-2	P.54C-274
	The room lamp does not illuminate normally. <Vehicles without keyless entry system>		P.54C-281
	The rear personal lamp does not illuminate normally. <Vehicles with keyless entry system>	O-3	P.54C-288
	The rear personal lamp does not illuminate normally. <Vehicles without keyless entry system>		P.54C-298
	The luggage compartment lamp does not illuminate normally. <Vehicles with keyless entry system>	O-4	P.54C-308
	The luggage compartment lamp does not illuminate normally. <Vehicles without keyless entry system>		P.54C-314
	The door lamp does not illuminate normally.	O-5	P.54C-320
	Interior lamp automatic shutoff function does not work normally. <Vehicles with keyless entry system>	O-6	P.54C-327
	The door-ajar warning lamp does not illuminate/extinguish normally.	O-7	P.54C-329

Main Index
Group TOC

CHECK TROUBLE BY USING THE INPUT SIGNAL CHECK

M1549024200813

<Data list, function diagnosis or pulse check>
If a problem is found in the Service Data inspection, observe the table below.

Symptom		Inspection procedure number	Reference page
The ignition switch (ACC) signal is not received.		P-1	P.54C-332
The ignition switch (IG1) signal is not received.		P-2	P.54C-335
The back-up lamp switch signal is not received. <M/T>		P-3	P.54C-338
The front fog lamp switch signal is not received.		P-4	P.54C-342
The driver's door switch signal is not received. <LH drive vehicles>		P-5	P.54C-346
The driver's door switch signal is not received. <RH drive vehicles>			P.54C-348
Column switch (lighting and turn-signal lamp)	The tail lamp switch signal is not received.	P-6	P.54C-350
	The headlamp switch signal is not received.		
	The dimmer switch signal is not received.		
	The passing switch signal is not received.		
	The turn-signal lamp switch (LH) signal is not received.		
	The turn-signal lamp switch (RH) signal is not received.		
Column switch (windshield wiper/washer and rear wiper washer switch)	The windshield mist wiper switch signal is not received.	P-7	P.54C-353
	The windshield intermittent wiper switch signal is not received.		
	The windshield low-speed wiper switch signal is not received.		
	The windshield high-speed wiper switch signal is not received.		
	The windshield washer switch signal is not received.		
	The rear wiper switch signal is not received.		
	The rear washer switch signal is not received.		
	The windshield intermittent wiper volume signal is not received.	P-8	P.54C-355
When the sunroof switch is operated, the switch signals are not received.		P-9	P.54C-359
The key reminder switch signal is not received.		P-10	P.54C-364
The hazard warning lamp switch signal is not received.		P-11	P.54C-368
All the door switch signals are not received.		P-12	P.54C-373

Main Index
Group TOC

Symptom	Inspection procedure number	Reference page
The driver's door lock actuator switch signal is not received. <LH drive vehicles>	P-13	P.54C-379
The driver's door lock actuator switch signal is not received. <RH drive vehicles>		P.54C-383
The passenger’s door lock key switch signal is not detected. <LH drive vehicles>	P-14	P.54C-386
The passenger’s door lock key switch signal is not detected. <RH drive vehicles>		P.54C-390
The tailgate key switch signal is not detected.	P-15	P.54C-393
The tailgate lock release handle signal is not received.	P-16	P.54C-397
The driver's seat belt switch signal is not received <LH drive vehicles>	P-17	P.54C-401
The driver's seat belt switch signal is not received <RH drive vehicles>		P.54C-404
The front passenger’s seat belt switch signal is not received. <Vehicles for Australia and New Zealand>	P-18	P.54C-407
Signal is not received from the electric remote controlled mirror switch (folding/unfolding switch).	P-19	P.54C-410
The interior lamp "all on" or "all off" switch signal is not sent to the ETACS-ECU.	P-20	P.54C-415
Each switch signal of the keyless entry transmitter is not received.	P-21	P.54C-420
The interior lamp loaded signal is not detected.	P-22	P.54C-421
The vehicle speed signal is not received.	P-23	P.54C-425

Main Index
Group TOC

OPERATION AND FUNCTION QUICK-REFERENCE TABLE FOR INPUT SIGNAL INSPECTION PROCEDURES

M1549020300432

If troubles have occurred in the functions which use the SWS simultaneously, observe the table below to check input signals.

(This table shows only the input signals which will cause troubles in at least two functions simultaneously).

Function	P-1	P-2	P-5	P-6	P-7	P-10	P-11	P-12	P-13	P-21	P-22	P-23
Lamp reminder function	–	×	×	×	–	–	–	–	–	–	–	–
Seat belt warning buzzer function	×	–	–	–	–	–	–	–	–	–	–	×
Door-ajar warning buzzer function	×	×	×	–	–	–	–	×	–	–	–	×
Turn-signal lamp operation sound function	–	×	–	–	–	–	×	–	–	–	–	–
Ignition key reminder buzzer function does not work. <Vehicles for GCC only>	–	×	×	–	–	×	–	–	–	–	–	–
The speed alarm buzzer does not work. <Vehicles for GCC only>	–	–	–	–	–	–	–	–	–	–	–	×
Control of central door locking	–	–	–	–	–	–	–	–	×	–	–	–
Power window control	–	×	–	–	–	–	–	–	–	–	–	–
Keyless entry system	–	–	×	–	–	×	×	×	–	×	–	–
Keyless entry hazard warning lamp answerback	–	–	–	–	–	×	×	–	–	×	–	–
Multi-mode keyless entry system	–	–	–	–	–	–	–	–	–	×	–	–
Sunroof control	×	–	×	–	–	–	–	–	–	–	–	–
Control of windshield wiper washer	×	–	–	–	×	–	–	–	–	–	–	×
Rear wiper washer control	×	–	–	–	×	–	–	–	–	–	–	–
Electric retractable remote controlled door mirror	×	–	×	–	–	–	–	–	–	–	–	–
Ignition key cylinder illumination lamp function	–	×	×	–	–	×	–	–	–	–	–	–
Seat belt indicator lamp	–	×	–	–	–	–	–	–	–	–	–	×

Main Index
Group TOC

Function	P-1	P-2	P-5	P-6	P-7	P-10	P-11	P-12	P-13	P-21	P-22	P-23
Headlamp control	–	×	–	×	–	–	–	–	–	–	–	–
Tail lamp control	–	×	–	×	–	–	–	–	–	–	–	–
Headlamp automatic-shutdown function	–	×	×	×	–	–	–	–	–	–	–	–
Front fog lamp control	–	–	–	×	–	–	–	–	–	–	–	–
Turn-signal lamp control	–	×	–	×	–	–	×	–	–	–	–	–
Interior lamp control	–	×	×	–	–	×	×	×	×	–	×	–
Interior lamp automatic-shutdown function	×	×	×	–	–	–	–	×	–	–	×	–
Door-ajar warning lamp	–	–	×	–	–	–	×	×	–	–	–	–

Main Index
Group TOC

SYMPTOM PROCEDURES

INSPECTION PROCEDURE A-1: Communication with the SWS monitor is not possible.

⚠ CAUTION
Whenever the ECU is replaced, ensure that the power supply circuit, the earthing circuit and the communication circuit are normal.

MUT-III Communication and ETACS-ECU Earth Circuit

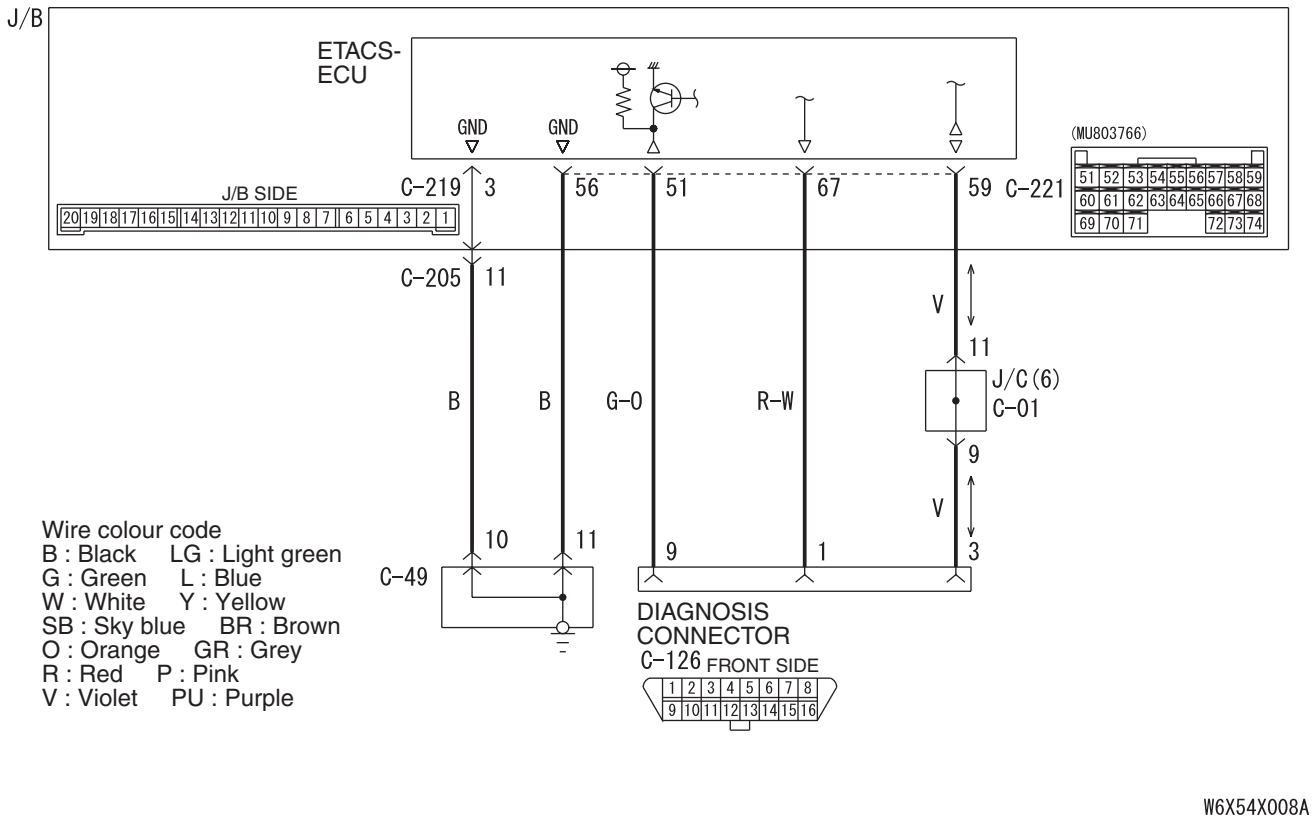

COMMENTS ON TROUBLE SYMPTOM

The SWS monitor may be connected improperly.

POSSIBLE CAUSES

- Malfunction of the SWS monitor body (I/F cartridge)
- Malfunction of the SWS monitor harness
- Malfunction of the ETACS-ECU
- Damaged harness wires and connectors

DIAGNOSIS PROCEDURE

Step 1. Check that the M.U.T.-III communicates with the other systems.

Check whether the M.U.T.-III can communicate with the other systems.

Q: Is the check result normal?

YES : Go to Step 2.

NO : Diagnose the system, which cannot communicate with the M.U.T.-III.

Main Index
Group TOC

Step 2. Check that the M.U.T.-III can communicate with the system.

When the ignition switch is turned ON, check if the M.U.T.-III can communicate with the system.

Q: Is the check result normal?

YES : Refer to Inspection Procedure A-3 "Communication with ETACS-ECU is not possible P.54C-51."

NO : Go to Step 3.

Step 3. Connector check: C-221 ETACS-ECU connector

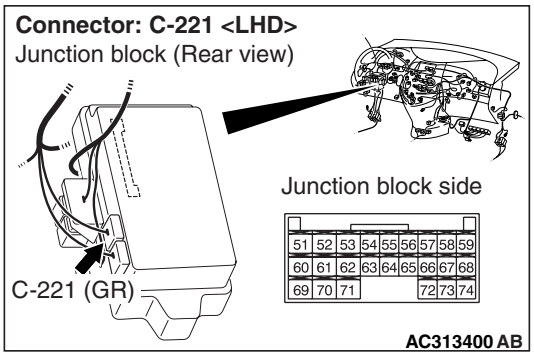

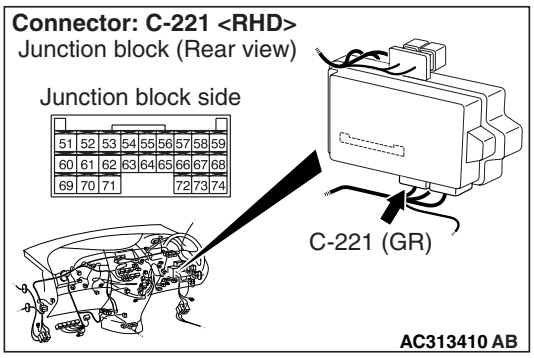

Q: Is the check result normal?

YES : Go to Step 4.

NO : Repair the defective connector.

Step 4. Resistance measurement at the C-221 ETACS-ECU connector.

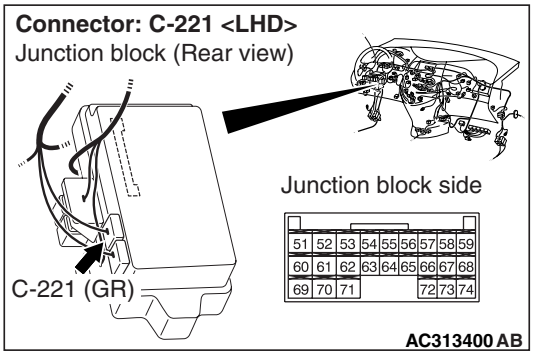

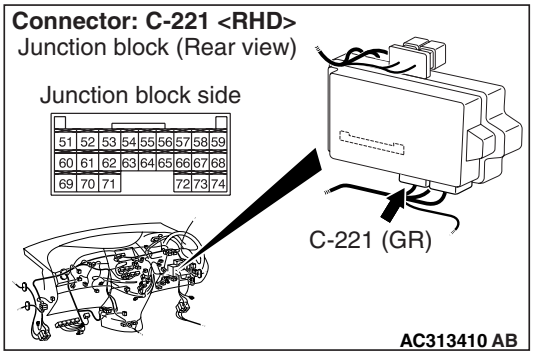

(1) Disconnect the connector, and measure at the wiring harness side.

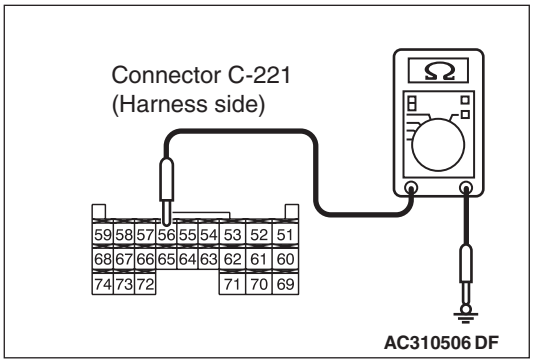

(2) Resistance between C-221 ETACS-ECU connector terminal No.56 and body earth

OK: 2 Ω or less

Q: Is the check result normal?

YES : Go to Step 7.

NO : Go to Step 5.

Step 5. Connector check: C-49 earth connector

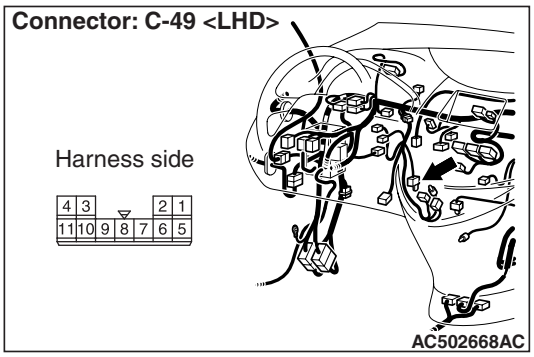

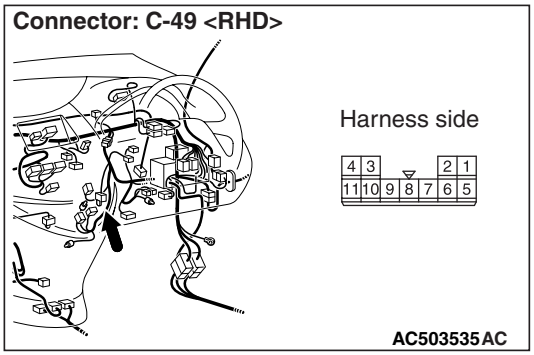

Q: Is the check result normal?
YES : Go to Step 6.
NO : Repair the connector.

Step 6. Check the wiring harness between C-221 ETACS-ECU connector terminal No.56 and C-49 earth connector terminal No.11.

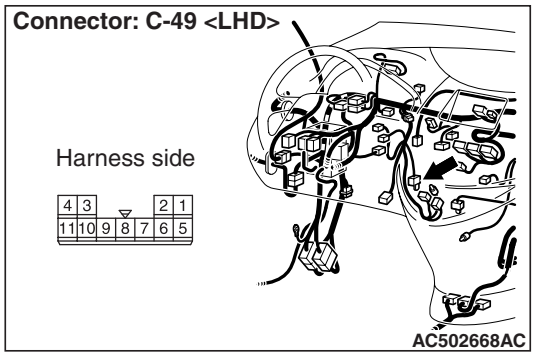

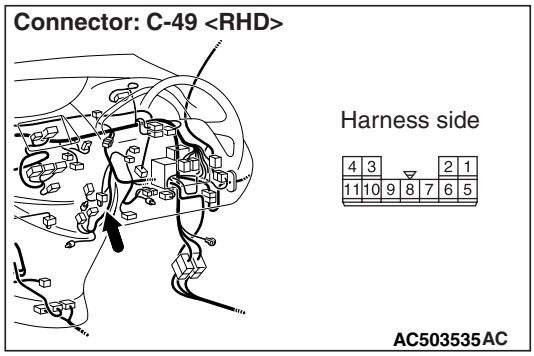

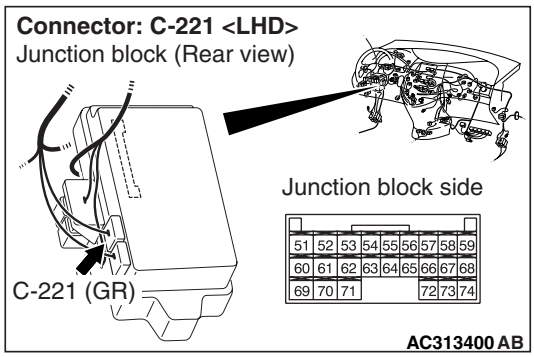

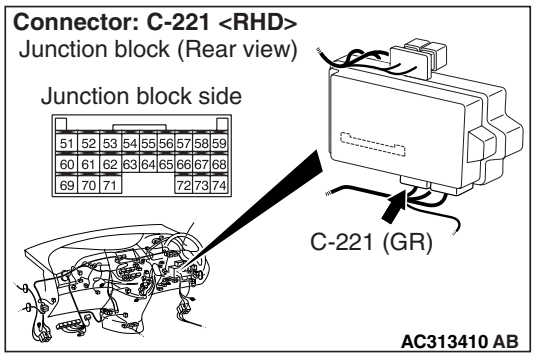

- Check the earth wires for open circuit.

Q: Are the check results normal?
YES : The trouble can be an intermittent malfunction (Refer to GROUP 00 – How to Cope with Intermittent Malfunction P.00-5).
NO : Repair the wiring harness.

Main Index
Group TOC

Step 7. Connector check: C-126 diagnosis connector

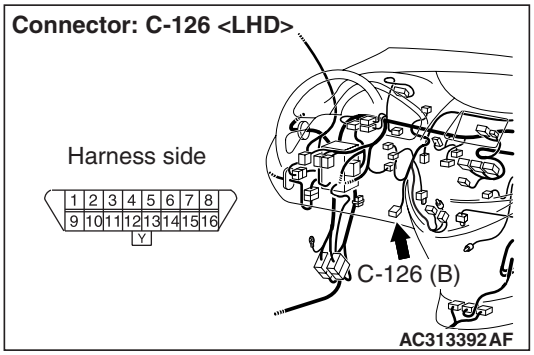

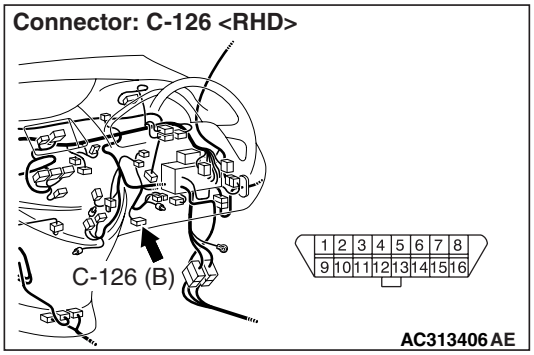

Q: Is the check result normal?
YES : Go to Step 8.
NO : Repair the defective connector.

Step 8. Check the wiring harness from C-221 ETACS-ECU connector terminal Nos. 51 and 67 to C-126 diagnosis connector terminal Nos. 9 and 1.

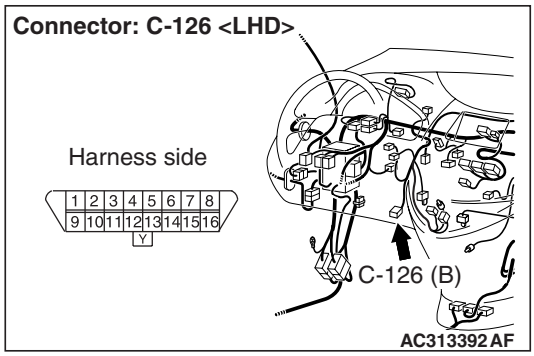

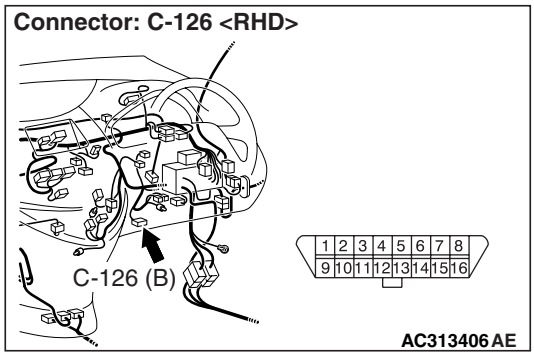

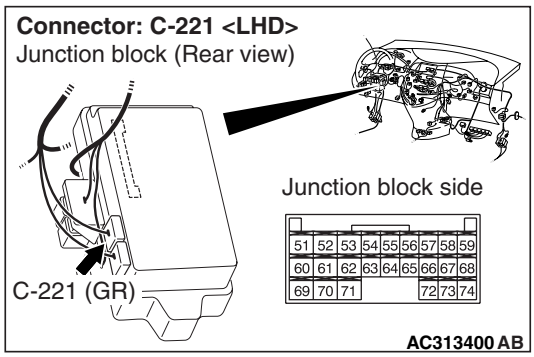

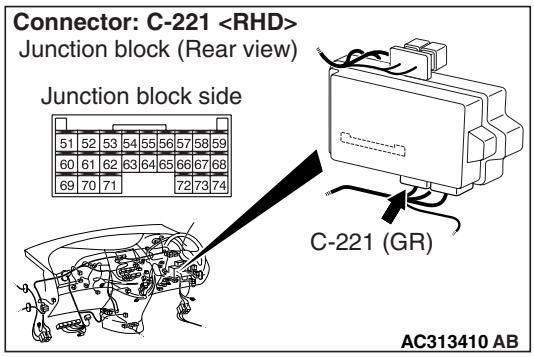

- Check the communication lines for open circuit.

Q: Are the check results normal?
YES : Replace the ETACS-ECU.
NO : Repair the wiring harness.

Main Index
Group TOC

INSPECTION PROCEDURE A-2: Communication with the column switch (column-ECU) is not possible.

⚠ CAUTION
Whenever the ECU is replaced, ensure that the power supply circuit, the earthing circuit and the communication circuit are normal.

Column Switch Power Supply and SWS Communication Circuit

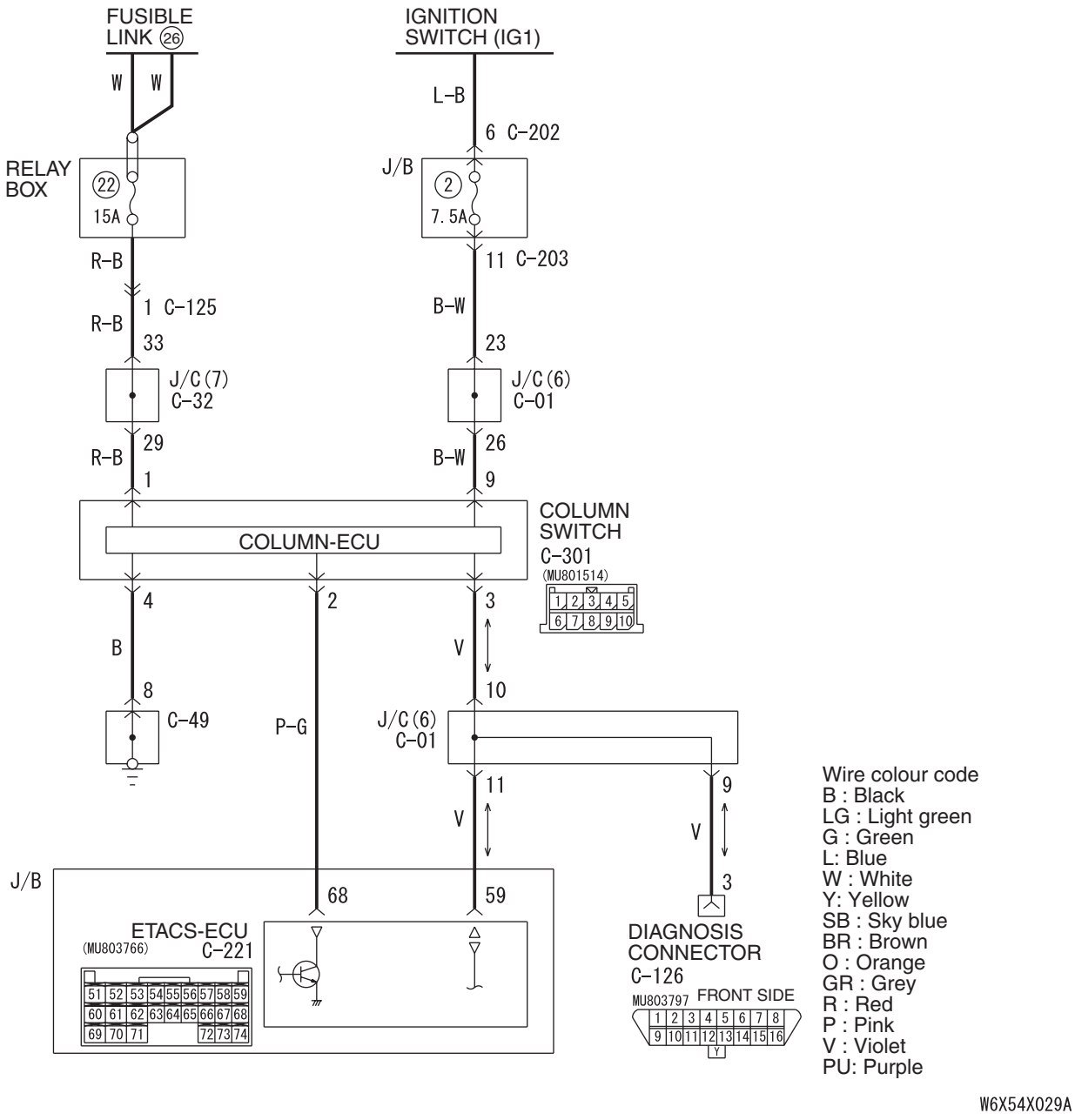

COMMENTS ON TROUBLE SYMPTOM

The power supply circuit to the column switch (column-ECU) may be defective. If the wiring harness of the battery power supply circuit for the ECU (column switch terminal No.1) is defective, also check the power supply circuit to the ignition switch (IG1) (column switch terminal No.9) and repair if necessary.

Main Index
Group TOC

TROUBLESHOOTING HINTS

- Malfunction of the ETACS-ECU
- Malfunction of the column switch
- Damaged harness wires and connectors

DIAGNOSIS PROCEDURE

Step 1. ECU check by using the SWS monitor

Check that the power supply and earth lines to the ETACS-ECU and the SWS communication lines are normal.

- Ignition switch: OFF

ECUS TO BE CHECKED

- ETACS ECU

OK: "OK" is displayed on the "ETACS ECU" menu.

Q: Is the check result normal?

YES : Go to Step 2.

NO : Refer to Inspection Procedure A-3 "Communication with ETACS-ECU is not possible P.54C-51."

Step 2. Connector check: C-301 column switch connector

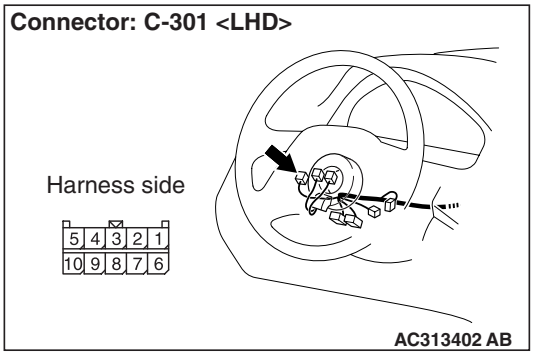

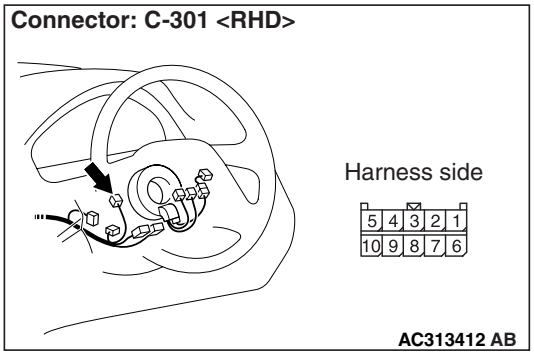

Q: Is the check result normal?

YES : Go to Step 3.

NO : Repair the defective connector.

Step 3. Voltage measurement at C-301 column switch connector.

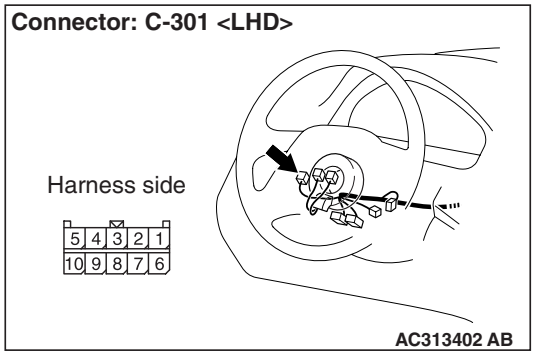

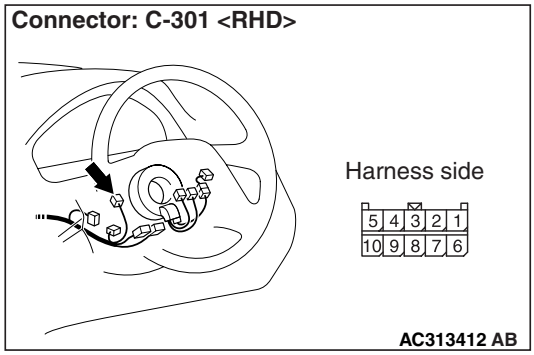

(1) Disconnect the connector, and measure at the wiring harness side.

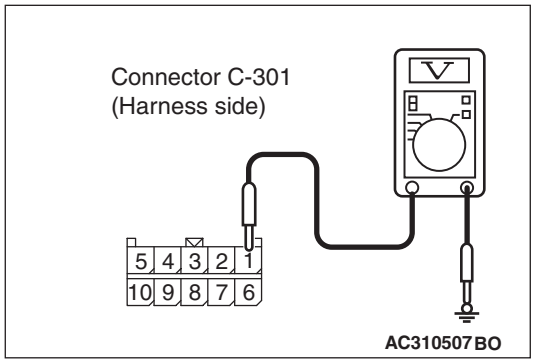

(2) Voltage between C-301 column switch connector No.1 and body earth

OK: System voltage

Q: Is the check result normal?

YES : Go to Step 5.

NO : Go to Step 4.

Step 4. Check the wiring harness between C-301 column switch connector terminal No.1 and fusible link (26).

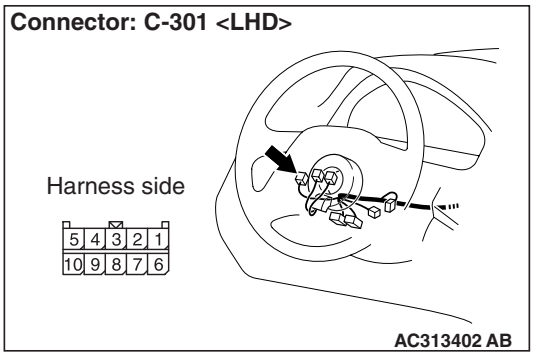

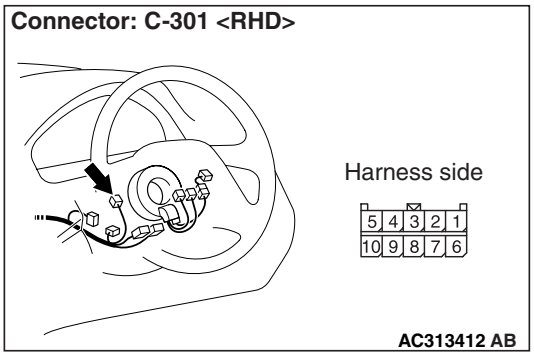

NOTE:

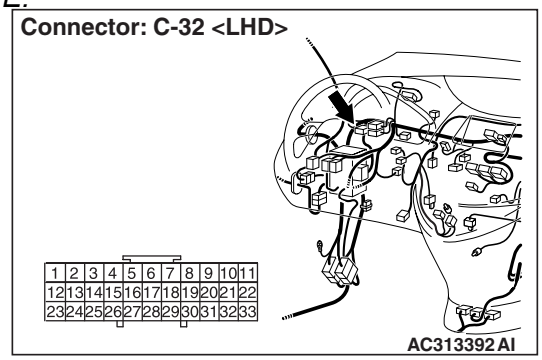

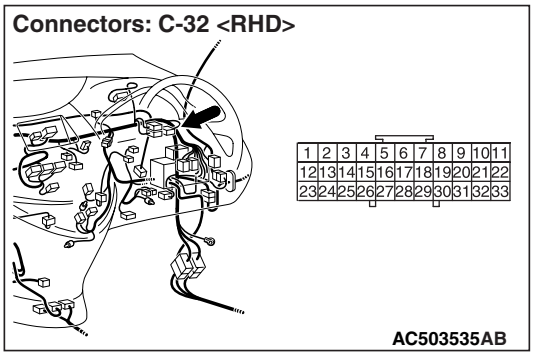

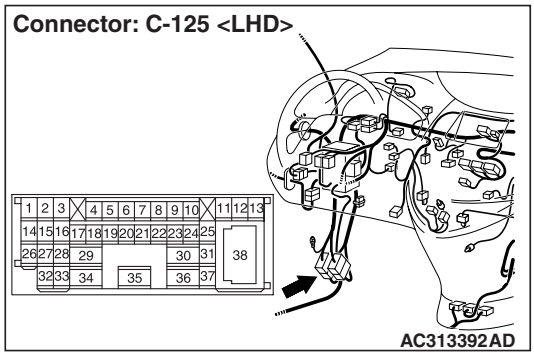

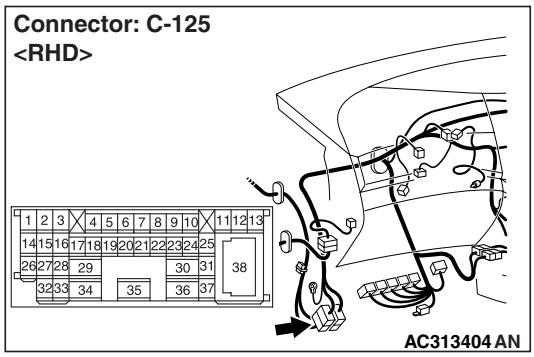

Prior to the wiring harness inspection, check intermediate connectors C-125, joint connector C-32, and repair if necessary.

- Check the power supply line for open circuit.

Q: Is the check result normal?

YES : The trouble can be an intermittent malfunction (Refer to GROUP 00 – How to Cope with Intermittent Malfunction P.00-5).

NO : Repair the wiring harness.

Main Index
Group TOC

Step 5. Resistance measurement at C-301 column switch connector.

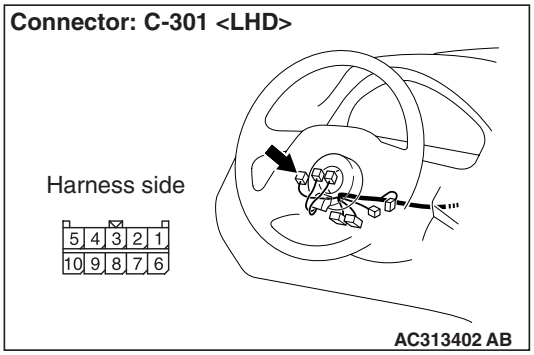

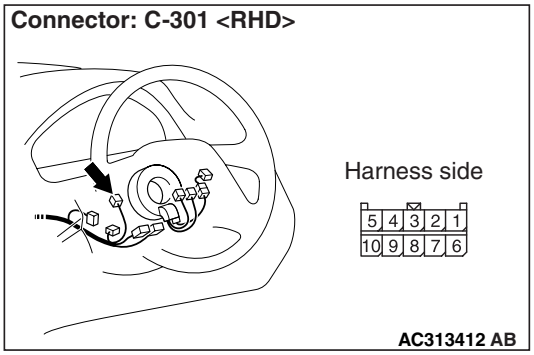

(1) Disconnect the connector, and measure at the wiring harness side.

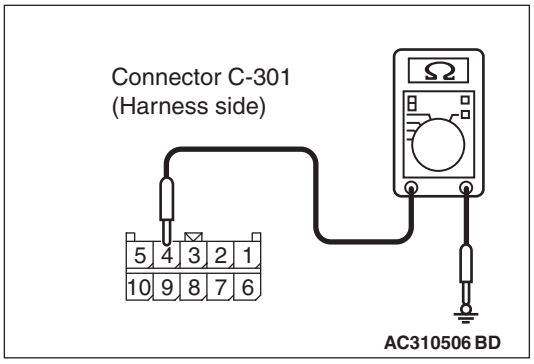

(2) Continuity between C-301 column switch connector terminal No.4 and body earth

OK: 2 Ω or less

Q: Is the check result normal?
YES : Go to Step 8.
NO : Go to Step 6.

Step 6. Connector check: C-49 earth connector

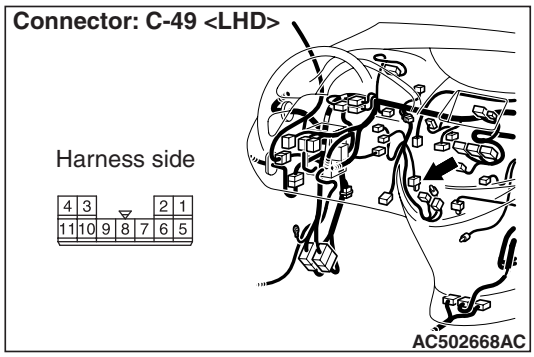

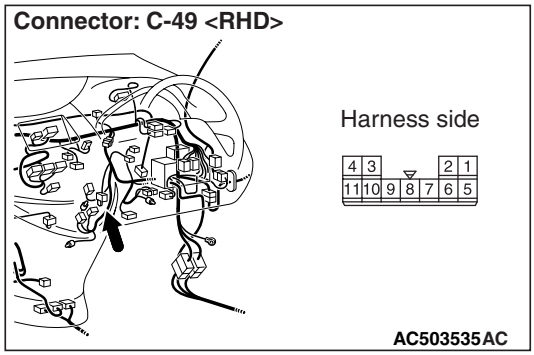

Q: Is the check result normal?
YES : Go to Step 7.
NO : Repair the connector.

Step 7. Check the wiring harness between C-301 column switch connector terminal No.4 and C-49 earth connectorterminal No.8

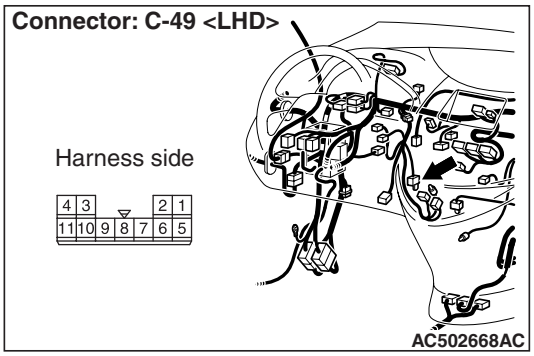

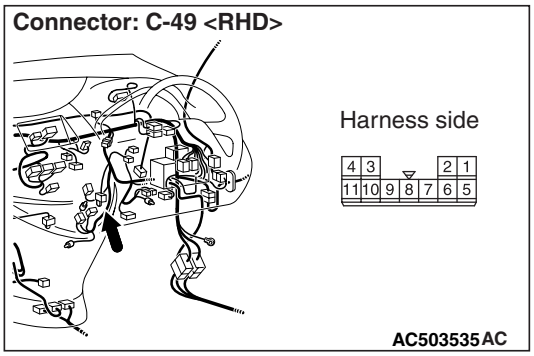

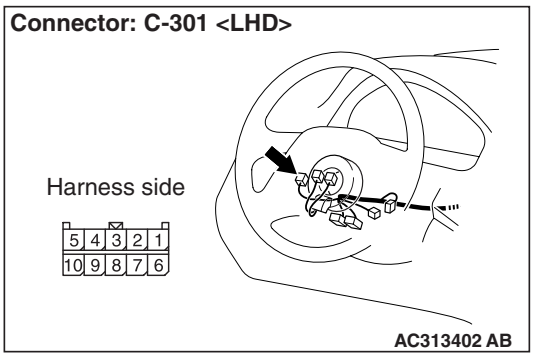

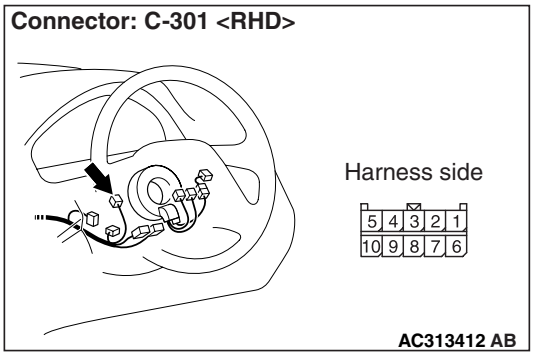

- Check the earth wires for open circuit.

Q: Is the check result normal?

YES : The trouble can be an intermittent malfunction (Refer to GROUP 00 – How to Cope with Intermittent Malfunction P.00-5).

NO : Repair the wiring harness.

Step 8. Connector check: C-221 ETACS-ECU connector

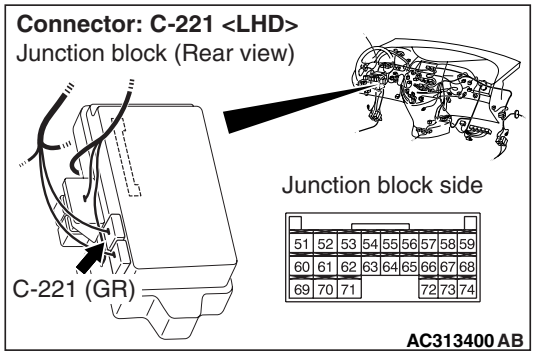

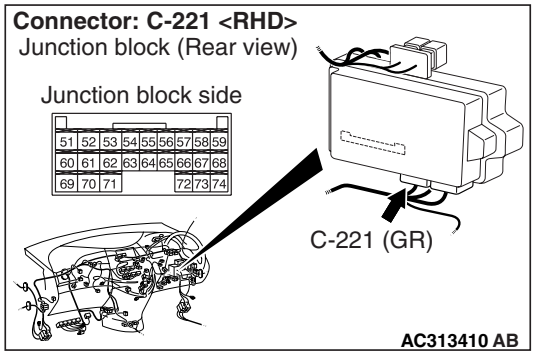

Q: Is the check result normal?

YES : Go to Step 9.

NO : Repair the defective connector.

Main Index
Group TOC

Step 9. Check the wiring harness from C-221 ETACS-ECU connector terminal Nos. 59 and 68 to C-301 column switch connector terminal Nos. 3 and 2.

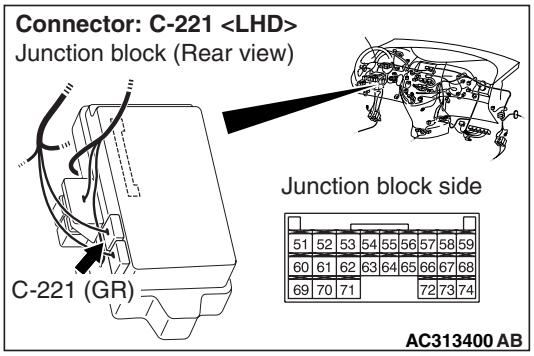

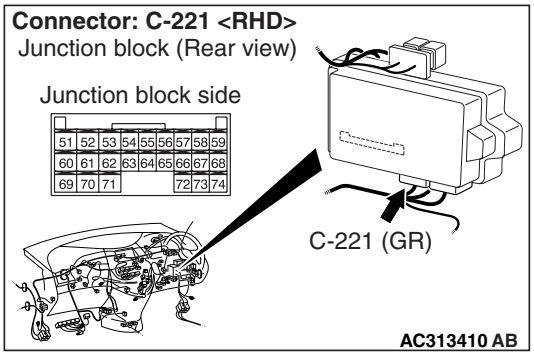

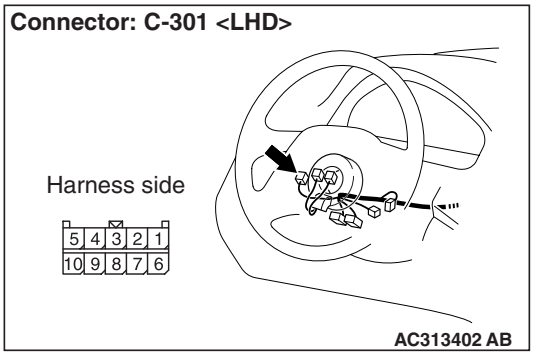

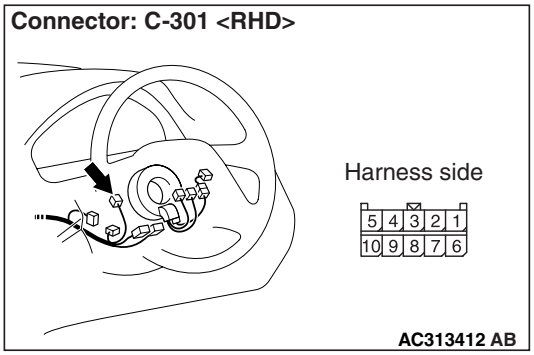

NOTE:

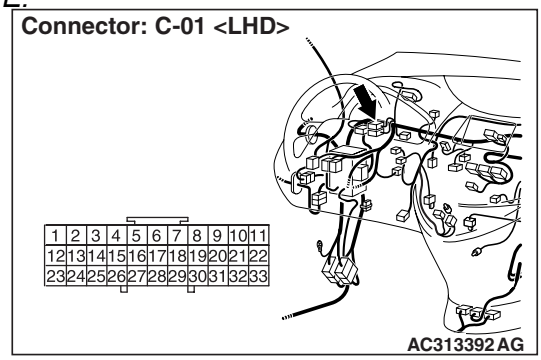

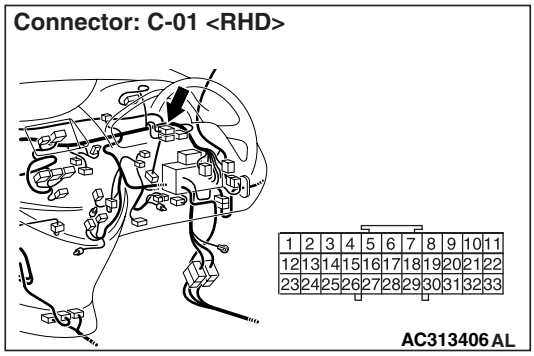

Prior to the wiring harness inspection, check joint connector C-01, and repair if necessary.

- Check the communication lines for open circuit.

Q: Is the check result normal?
YES : Go to Step 10.
NO : Repair the wiring harness.

Step 10. ECU check by using the SWS monitor

- Ignition switch: OFF

ECUS TO BE CHECKED

- COLUMN ECU

OK: "OK" is displayed on the "COLUMN ECU" menu.

Q: Is the check result normal?
YES : Go to Step 11.
NO : Replace the column switch.

Step 11. Retest the system.

Check that the ETACS-ECU communicates with the column switch.

Q: Is the check result normal?
YES : The trouble can be an intermittent malfunction (Refer to GROUP 00 – How to Cope with Intermittent Malfunction P.00-5).
NO : Replace the ETACS-ECU.

Main Index
Group TOC

INSPECTION PROCEDURE A-3: Communication with the ETACS-ECU is not possible.

⚠ CAUTION

Whenever the ECU is replaced, ensure that the power supply circuit, the earthing circuit and the communication circuit are normal.

ETACS-ECU Power Supply and SWS Communication Circuit

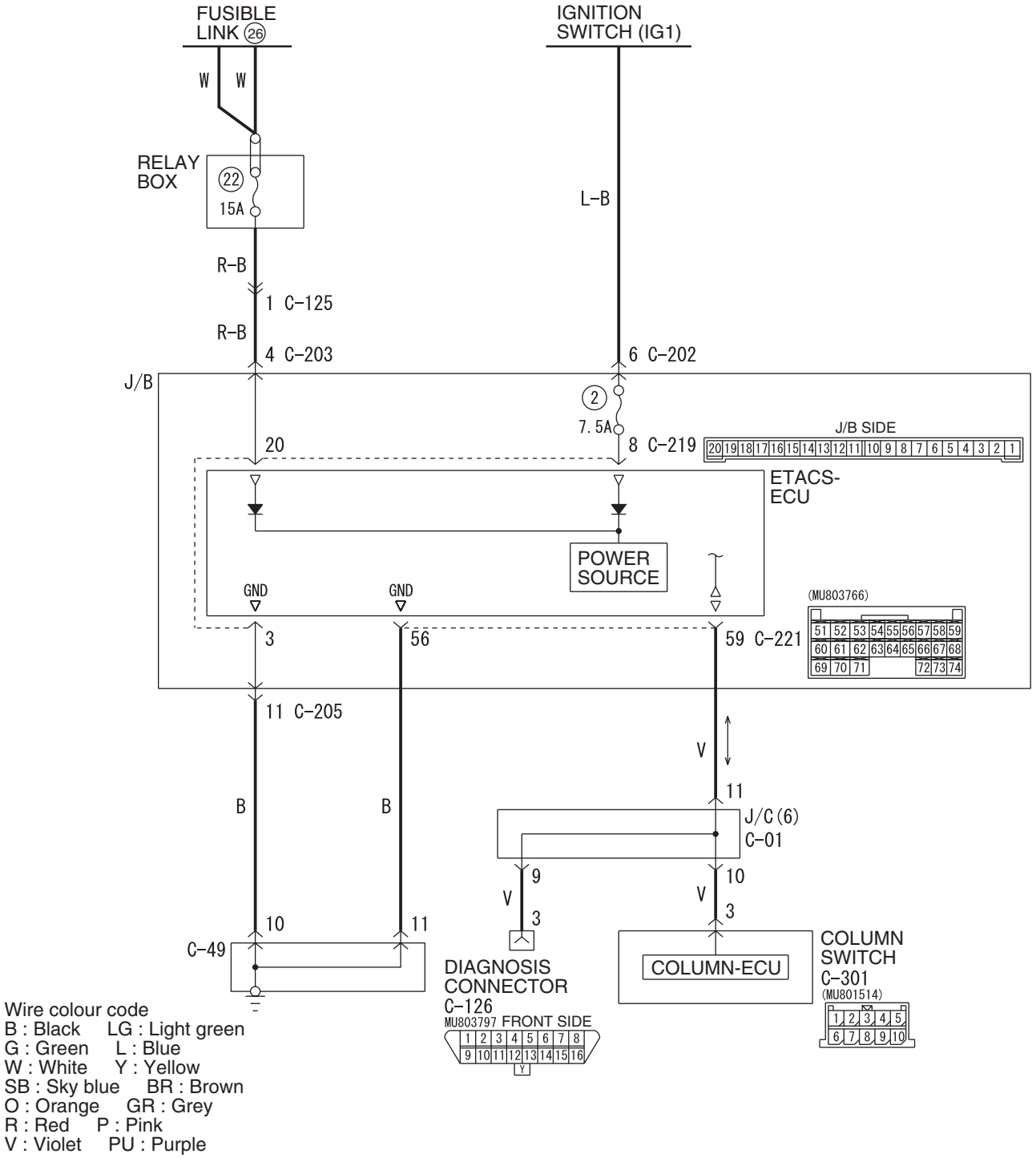

W6X54X085A

Main Index
Group TOC

COMMENTS ON TROUBLE SYMPTOM

It is suspected that the power supply circuit to the ETACS-ECU is defective, or the wiring harness between the SWS monitor and the ETACS-ECU or their connector(s) is damaged. If the battery power supply circuit to the ECU (terminal No.20 of the ETACS-ECU) is damaged, also check the power supply circuit from the ignition switch (IG1) (terminal No.8 of the ETACS-ECU), and repair if necessary. If the earth circuit to the ECU (terminal No.3 of the ETACS-ECU) is defective, also check the earth circuit to the sensor (terminal No.56 of the ETACS-ECU), and repair if necessary.

TROUBLESHOOTING HINTS

- Malfunction of the ETACS-ECU
- Damaged harness wires and connectors

DIAGNOSIS PROCEDURE

Step 1. Connector check: C-219 ETACS-ECU connector

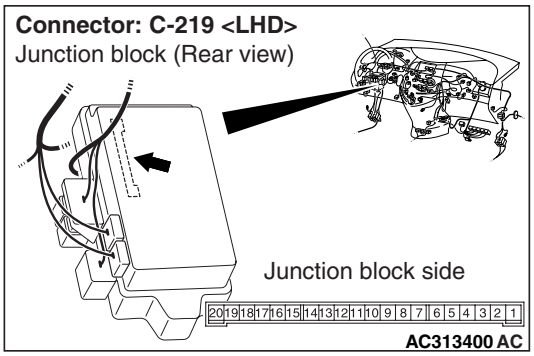

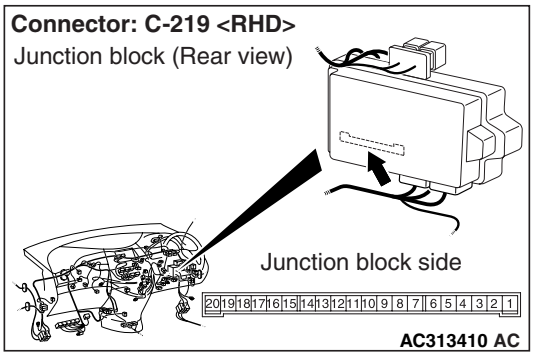

Q: Is the check result normal?
YES : Go to Step 2.
NO : Repair the defective connector.

Step 2. Voltage measurement at the C-219 ETACS-ECU connector.

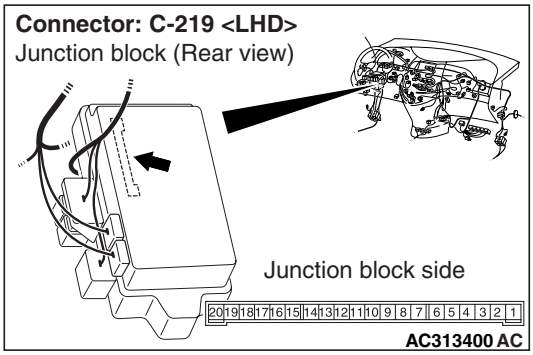

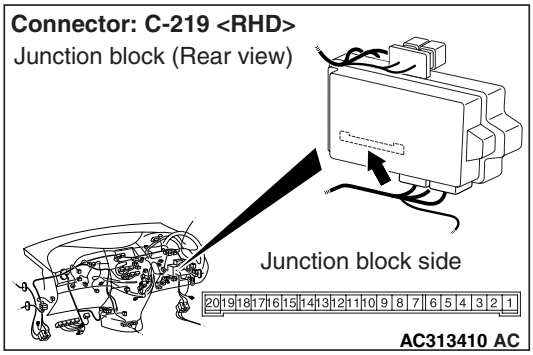

(1) Remove the ETACS-ECU, and measure at the junction block side.

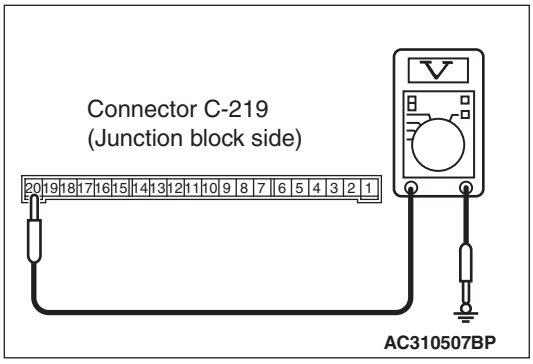

(2) Voltage between C-219 ETACS-ECU connector terminal No.20 and body earth

OK: System voltage

Q: Is the check result normal?
YES : Go to Step 4.
NO : Go to Step 3.

Main Index
Group TOC

Step 3. Check the wiring harness between C-219 ETACS-ECU connector terminal No.20 and fusible link (26).

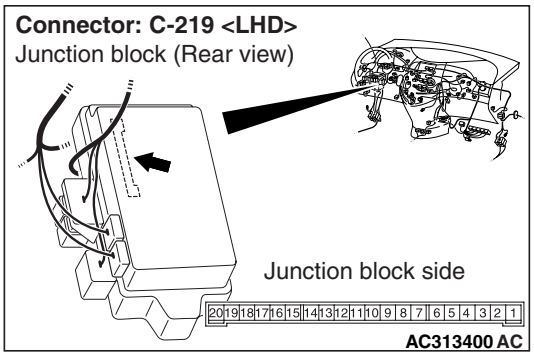

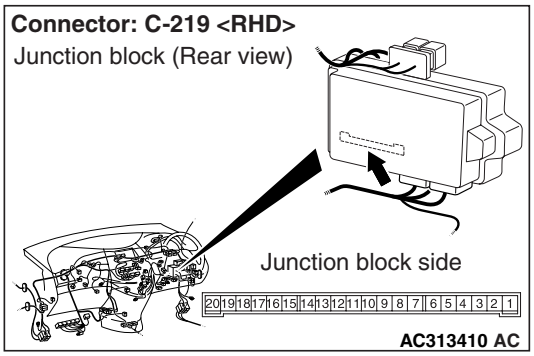

NOTE:

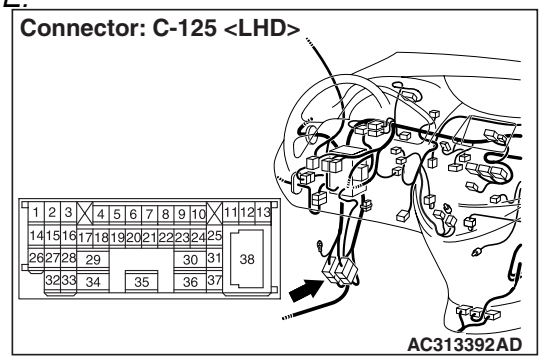

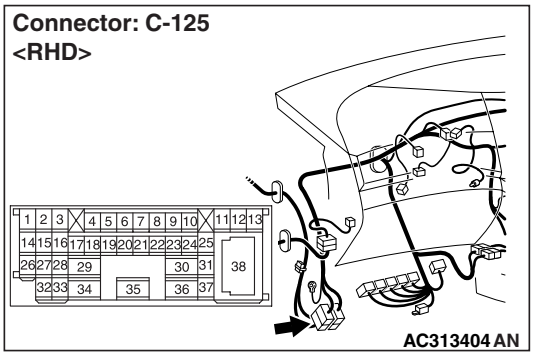

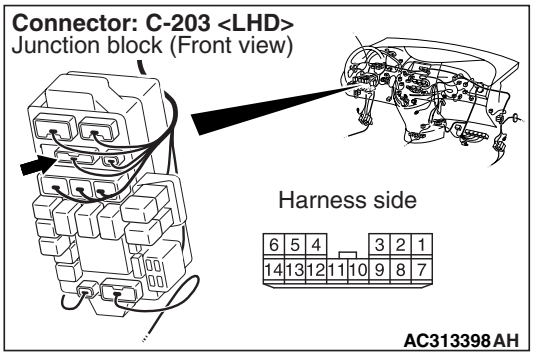

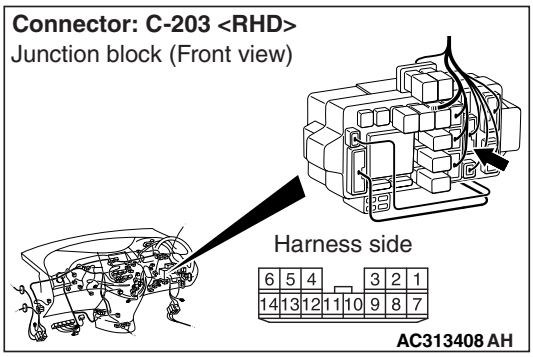

Prior to the wiring harness inspection, check intermediate connector C-125 and junction block connector C-203, and repair if necessary.

- Check the power supply line for open circuit.

Q: Is the check result normal?

YES : The trouble can be an intermittent malfunction (Refer to GROUP 00 – How to Cope with Intermittent Malfunction P.00-5).

NO : Repair the wiring harness.

Main Index
Group TOC

Step 4. Resistance measurement at the C-219 ETACS-ECU connector.

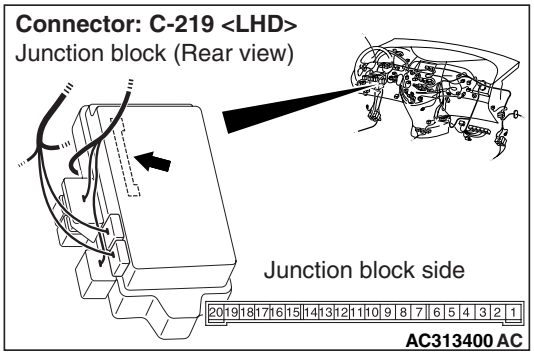

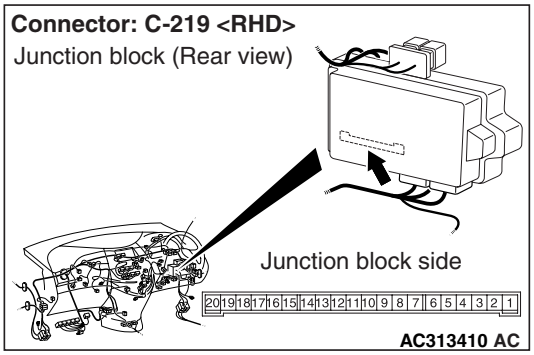

(1) Remove the ETACS-ECU, and measure at the junction block side.

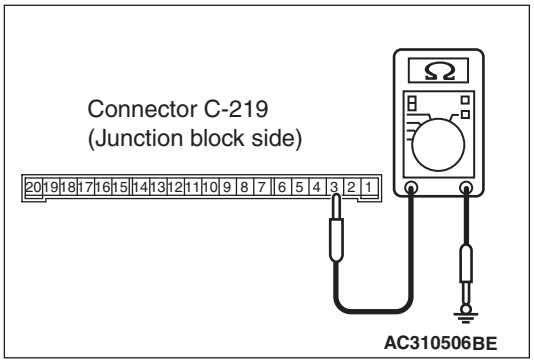

(2) Resistance between C-219 ETACS-ECU connector terminal No.3 and body earth

OK: 2 Ω or less

Q: Is the check result normal?
YES : Go to Step 7.
NO : Go to Step 5.

Step 5. Connector check: C-49 earth connector

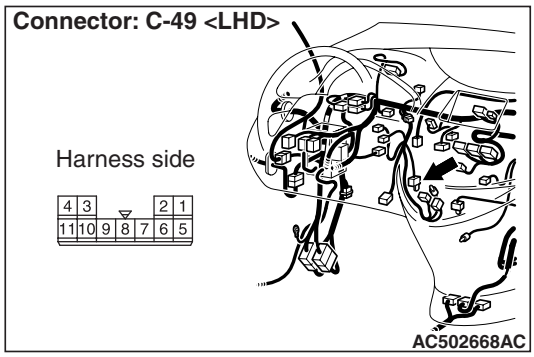

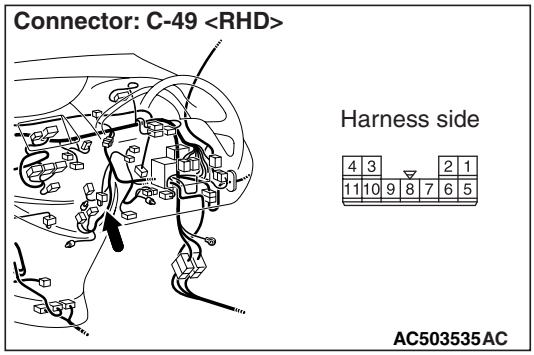

Q: Is the check result normal?
YES : Go to Step 6.
NO : Repair the connector.

Main Index
Group TOC

Step 6. Check the wiring harness between C-219 ETACS-ECU connector terminal No.3 and C-49 earth connector terminal No.10.

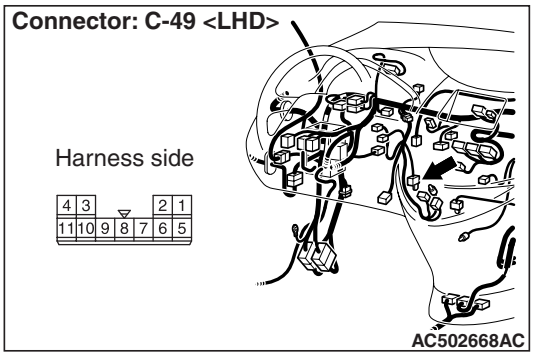

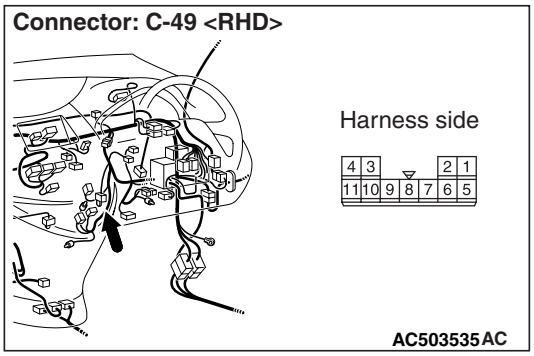

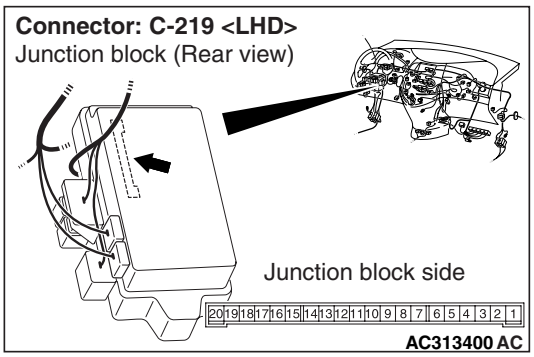

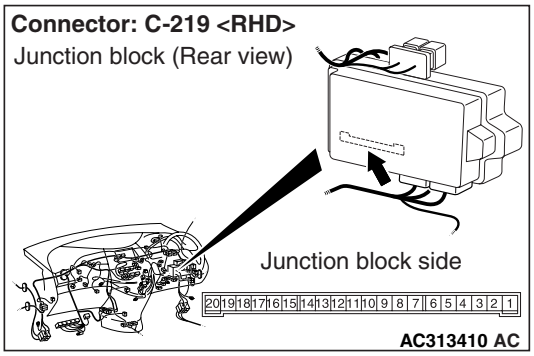

NOTE:

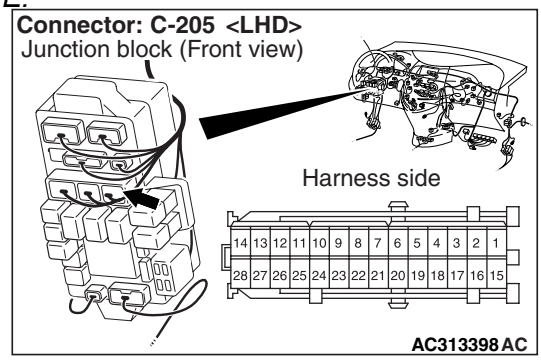

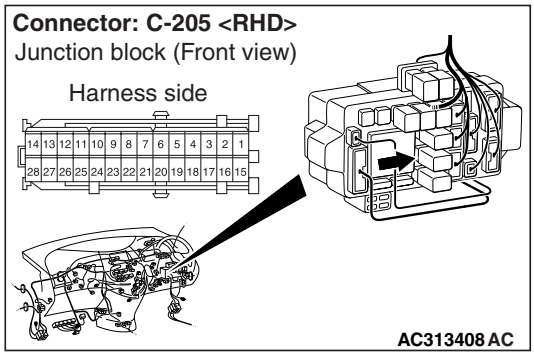

Prior to the wiring harness inspection, check junction block connector C-205, and repair if necessary.

- Check the earth wires for open circuit.

Q: Is the check result normal?

YES : The trouble can be an intermittent malfunction (Refer to GROUP 00 – How to Cope with Intermittent Malfunction P.00-5).

NO : Repair the wiring harness.

Main Index
Group TOC

Step 7. Connector check: C-221 ETACS-ECU connector and C-301 column switch connector

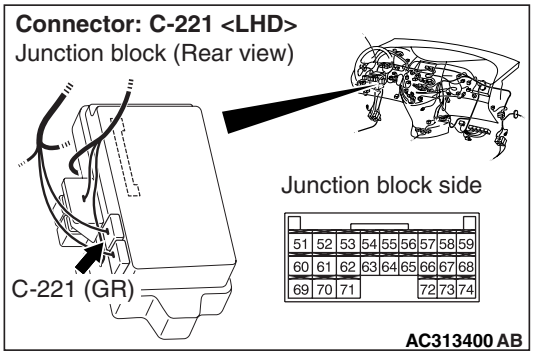

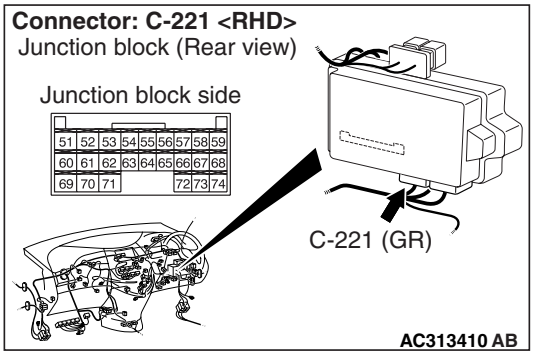

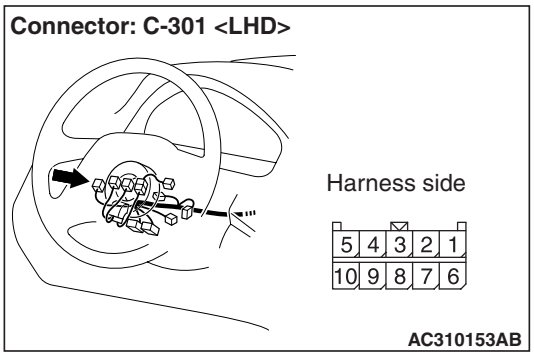

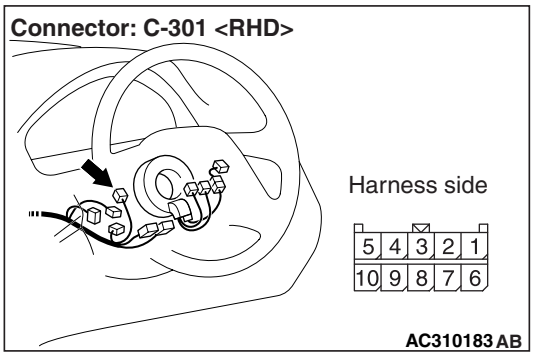

Q: Is the check result normal?

YES : Go to Step 8.

NO : Repair the defective connector.

Step 8. Check the wiring harness from C-221 ETACS-ECU connector terminal Nos. 59 and 68 to C-301 column switch connector terminal Nos. 3 and 2.

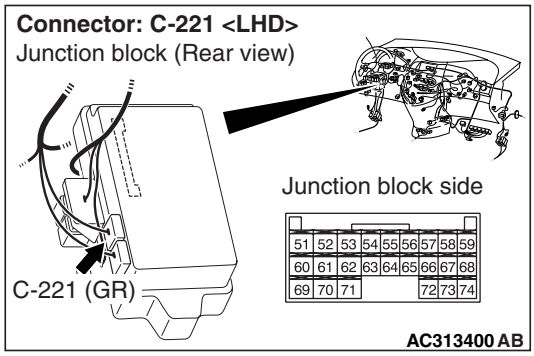

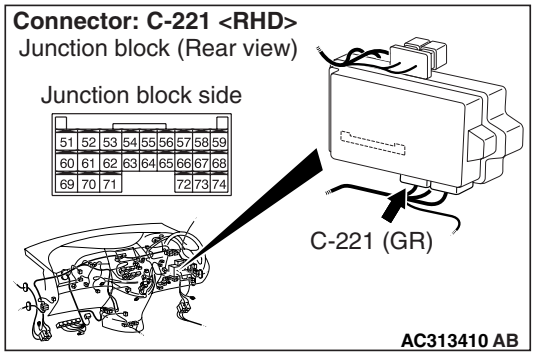

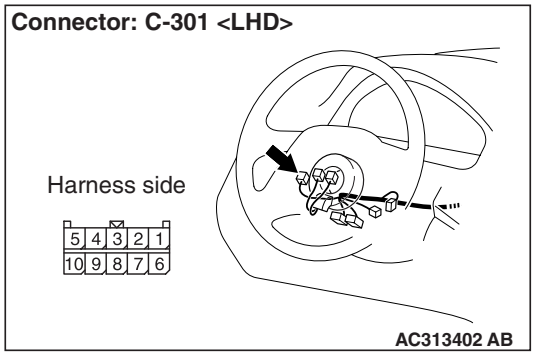

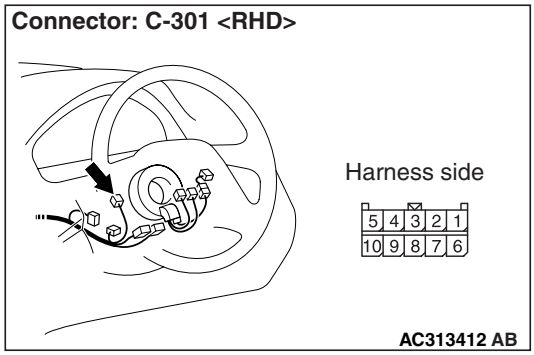

Main Index
Group TOC

NOTE:

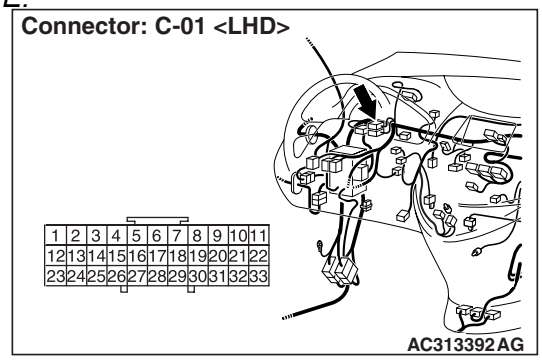

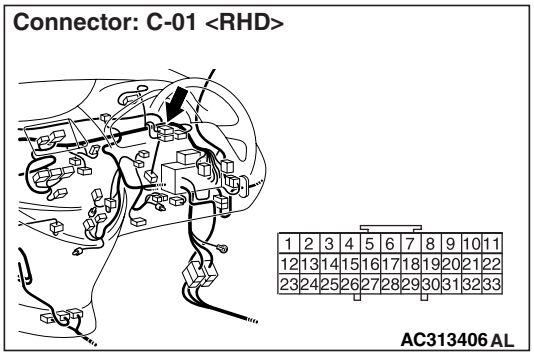

Prior to the wiring harness inspection, check joint connector C-01, and repair if necessary.

- Check the communication lines for open circuit.

Q: Is the check result normal?

YES : Go to Step 9.

NO : Repair the wiring harness.

Step 9. ECU check by using the SWS monitor

- Ignition switch: OFF

ECUS TO BE CHECKED

- ETACS ECU

OK: "OK" is displayed on the "ETACS ECU" menu.

Q: Is the check result normal?

YES : The trouble can be an intermittent malfunction (Refer to GROUP 00 – How to Cope with Intermittent Malfunction P.00-5).

NO : Replace the ETACS-ECU.

Main Index
Group TOC

INSPECTION PROCEDURE A-4: Communication with the front-ECU is not possible.

⚠ CAUTION

Whenever the ECU is replaced, ensure that the power supply circuit, the earthing circuit and the communication circuit are normal.

Front-ECU Power Supply and SWS Communication Circuit

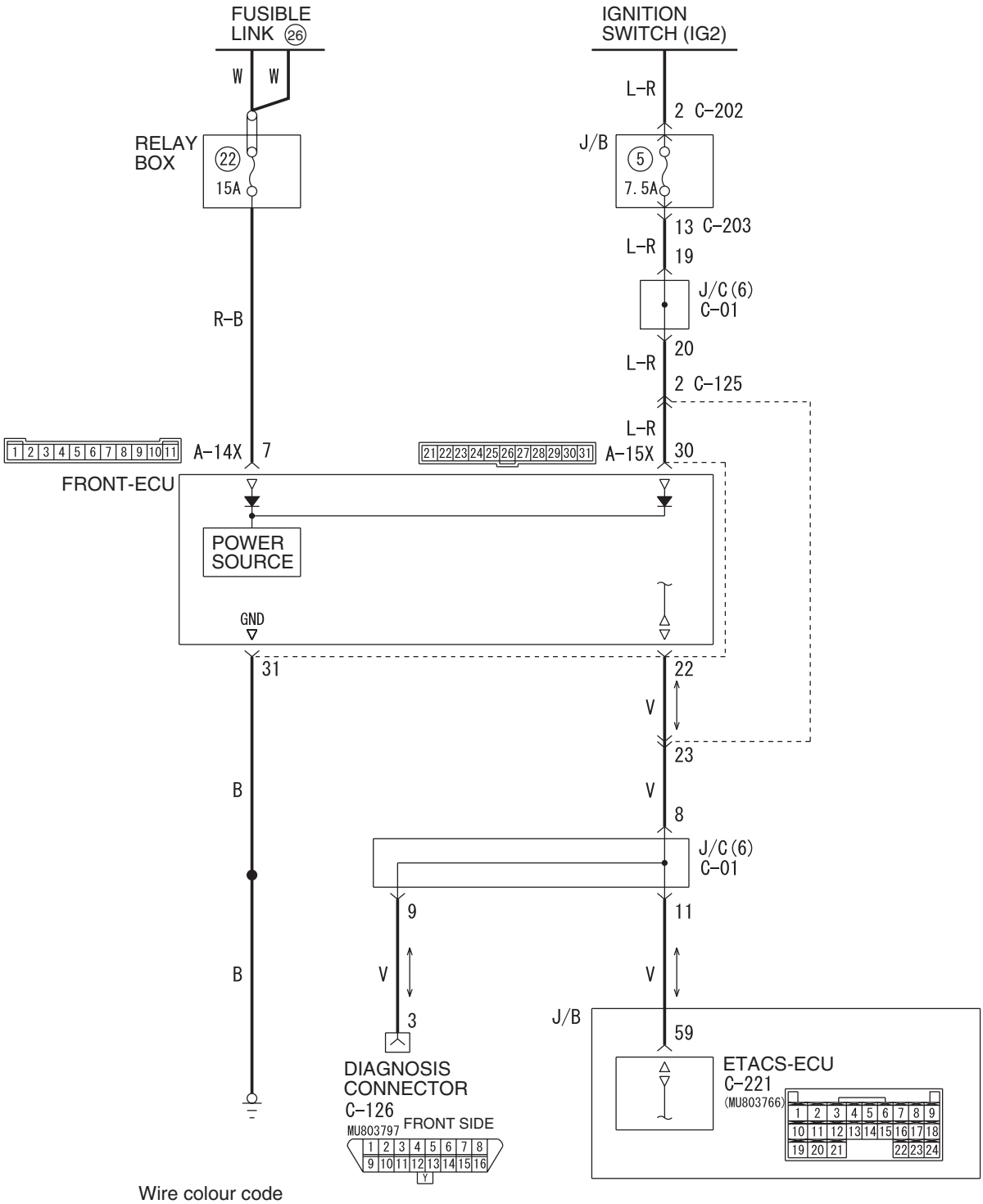

Wire colour code
B : Black LG : Light green G : Green L : Blue W : White Y : Yellow SB : Sky blue
BR : Brown O : Orange GR : Grey R : Red P : Pink V : Violet PU : Purple

W6X54X032A

COMMENTS ON TROUBLE SYMPTOM

It is suspected that the power supply circuit to the front-ECU is defective, or the wiring harness between the SWS monitor and the front-ECU or their connector(s) is damaged. If the battery power supply circuit to the ECU (terminal No.7 of the front-ECU) is damaged, also check the power supply circuit from the ignition switch (IG2) (terminal No.30 of the front-ECU), and repair if necessary.

POSSIBLE CAUSES

- Malfunction of the front-ECU
- Malfunction of the ETACS-ECU
- Damaged harness wires and connectors

DIAGNOSIS PROCEDURE

Step 1. ECU check by using the SWS monitor

Check that the power supply and earth lines to the ETACS-ECU and the SWS communication lines are normal.

- Ignition switch: OFF

ECUS TO BE CHECKED

- ETACS ECU

OK: "OK" is displayed on the "ETACS ECU" menu.

Q: Is the check result normal?

YES : Go to Step 2.

NO : Refer to Inspection Procedure A-3 "Communication with ETACS-ECU is not possible P.54C-51."

Step 2. Connector check: A-14X front-ECU connector

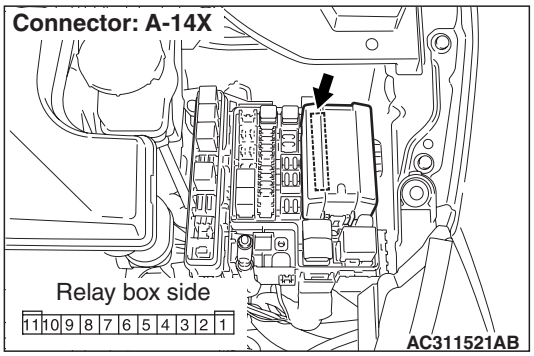

Q: Is the check result normal?

YES : Go to Step 3.

NO : Repair the defective connector.

Step 3. Voltage measurement at A-14X front-ECU connector.

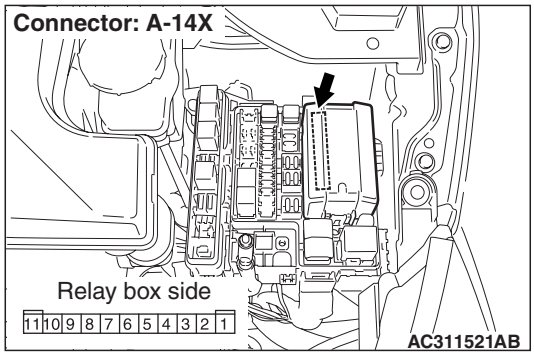

(1) Disconnect the connector, and measure at the relay box side.

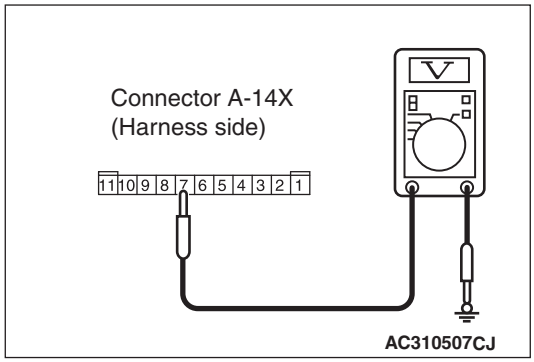

(2) Voltage between A-14X front-ECU connector terminal No.7 and body earth

OK: System voltage

Q: Is the check result normal?

YES : Go to Step 5.

NO : Go to Step 4.

Step 4. Check the wiring harness between A-14X front-ECU connector terminal No.7 and the fusible link (26).

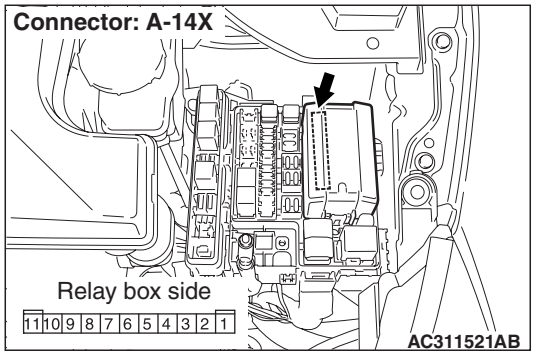

- Check the power supply line for open circuit.

Q: Is the check result normal?

YES : The trouble can be an intermittent malfunction (Refer to GROUP 00 – How to Cope with Intermittent Malfunction P.00-5).

NO : Repair the wiring harness.

Main Index
Group TOC

Step 5. Connector check: A-15X front-ECU connector

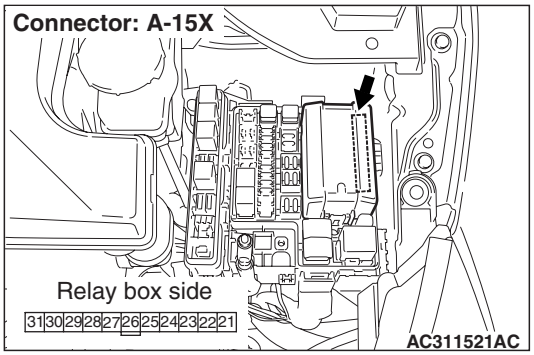

Q: Is the check result normal?
YES : Go to Step 6.
NO : Repair the defective connector.

Step 6. Resistance measurement at A-15X front-ECU connector.

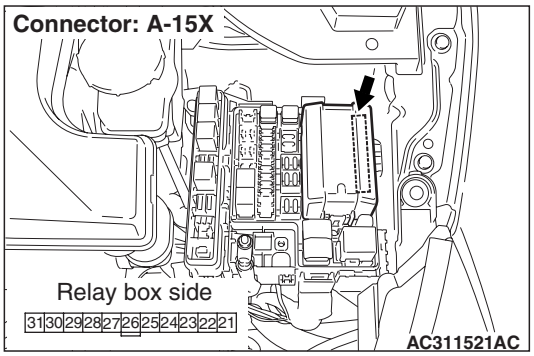

(1) Disconnect the connector, and measure at the relay box side.

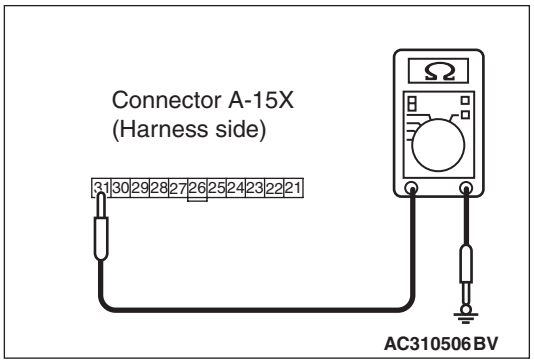

(2) Resistance between A-15X front-ECU connector terminal No.31 and body earth

OK: 2 Ω or less

Q: Is the check result normal?
YES : Go to Step 8.
NO : Go to Step 7.

Step 7. Check the wiring harness between A-15X front-ECU terminal connector terminal No.31 and A-25 earth connector terminal No.5.

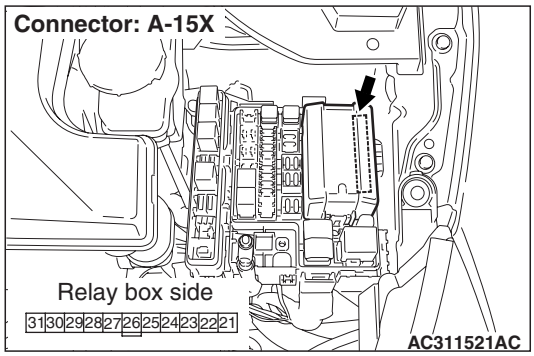

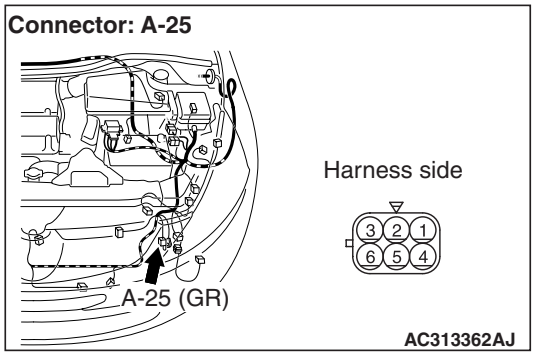

- Check the earth wires for open circuit.

Q: Is the check result normal?
YES : The trouble can be an intermittent malfunction (Refer to GROUP 00 – How to Cope with Intermittent Malfunction P.00-5).
NO : Repair the wiring harness.

Step 8. Connector check: C-221 ETACS-ECU connector

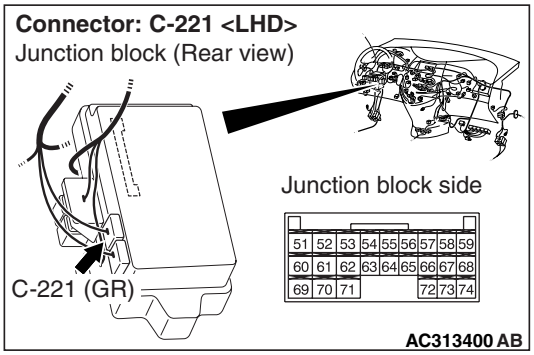

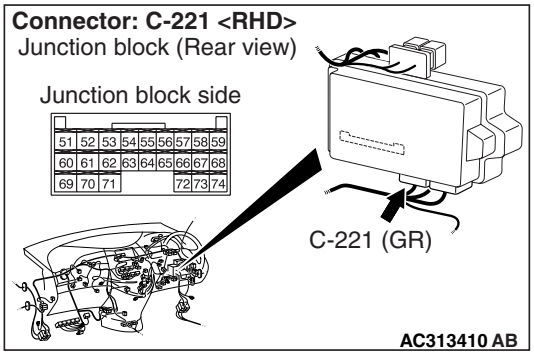

Q: Is the check result normal?

YES : Go to Step 9.

NO : Repair the defective connector.

Step 9. Check the wiring harness between A-15X front-ECU connector terminal No.22 and C-221 ETACS-ECU connector terminal No.59.

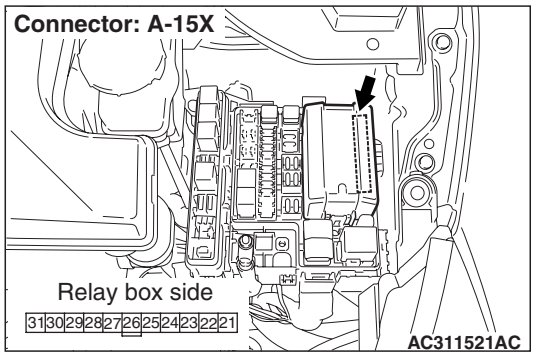

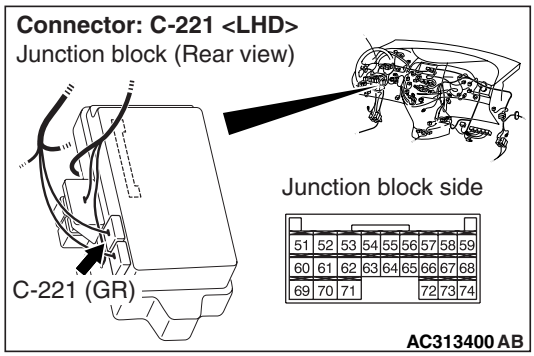

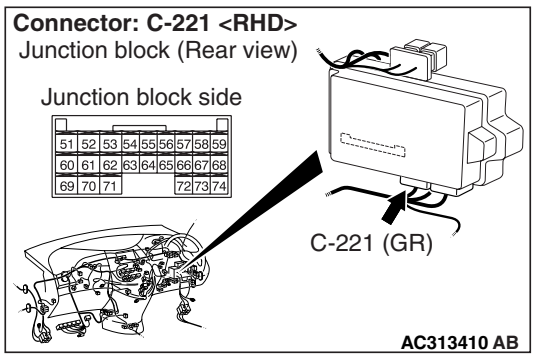

Main Index
Group TOC

NOTE:

Connectors: C-01 <LHD>, C-125 <LHD>

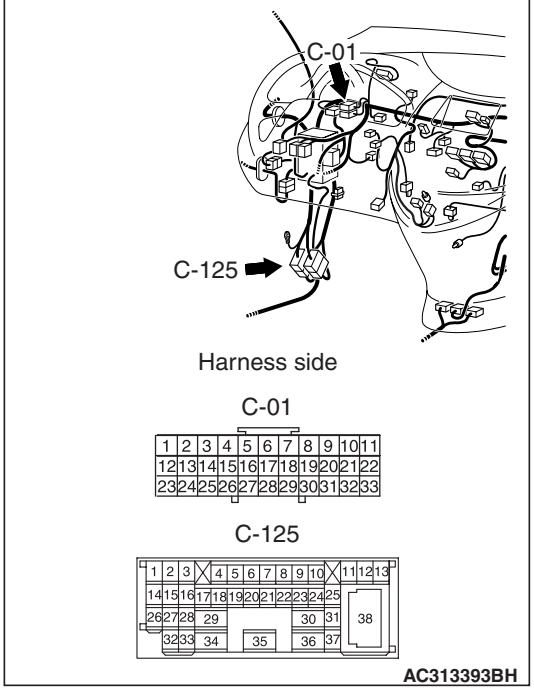

Connector: C-01 <RHD>

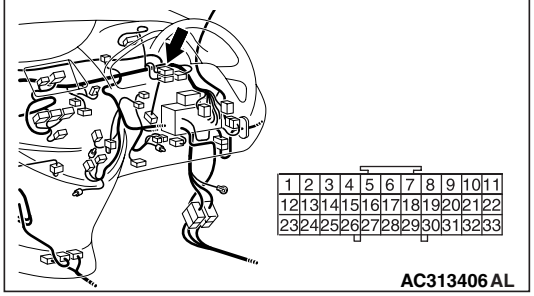

Connectors: C-125 <RHD>

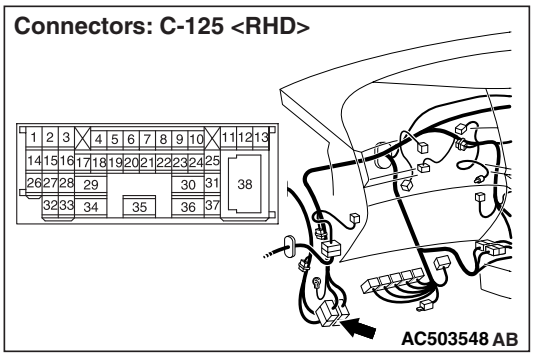

Prior to the wiring harness inspection, check joint connector C-01 and intermediate connector C-125, and repair if necessary.

- Check the communication lines for open circuit.

Q: Is the check result normal?

YES : Go to Step 10.

NO : Repair the wiring harness.

Step 10. ECU check by using the SWS monitor

Check that the power supply and earth lines to the front-ECU and the SWS communication lines are normal.

- Ignition switch: ON

ECUS TO BE CHECKED

- FRONT ECU

OK: "OK" is displayed on the "FRONT ECU" menu.

Q: Is the check result normal?

YES : The trouble can be an intermittent malfunction (Refer to GROUP 00 – How to Cope with Intermittent Malfunction P.00-5).

NO : Replace the front-ECU.

Main Index
Group TOC

INSPECTION PROCEDURE A-5: Communication with the sunroof motor assembly (sunroof-ECU) is not possible.

⚠ CAUTION

Whenever the ECU is replaced, ensure that the power supply circuit, the grounding circuit and the communication circuit are normal.

Sunroof Motor Assembly and SWS Communication Circuit

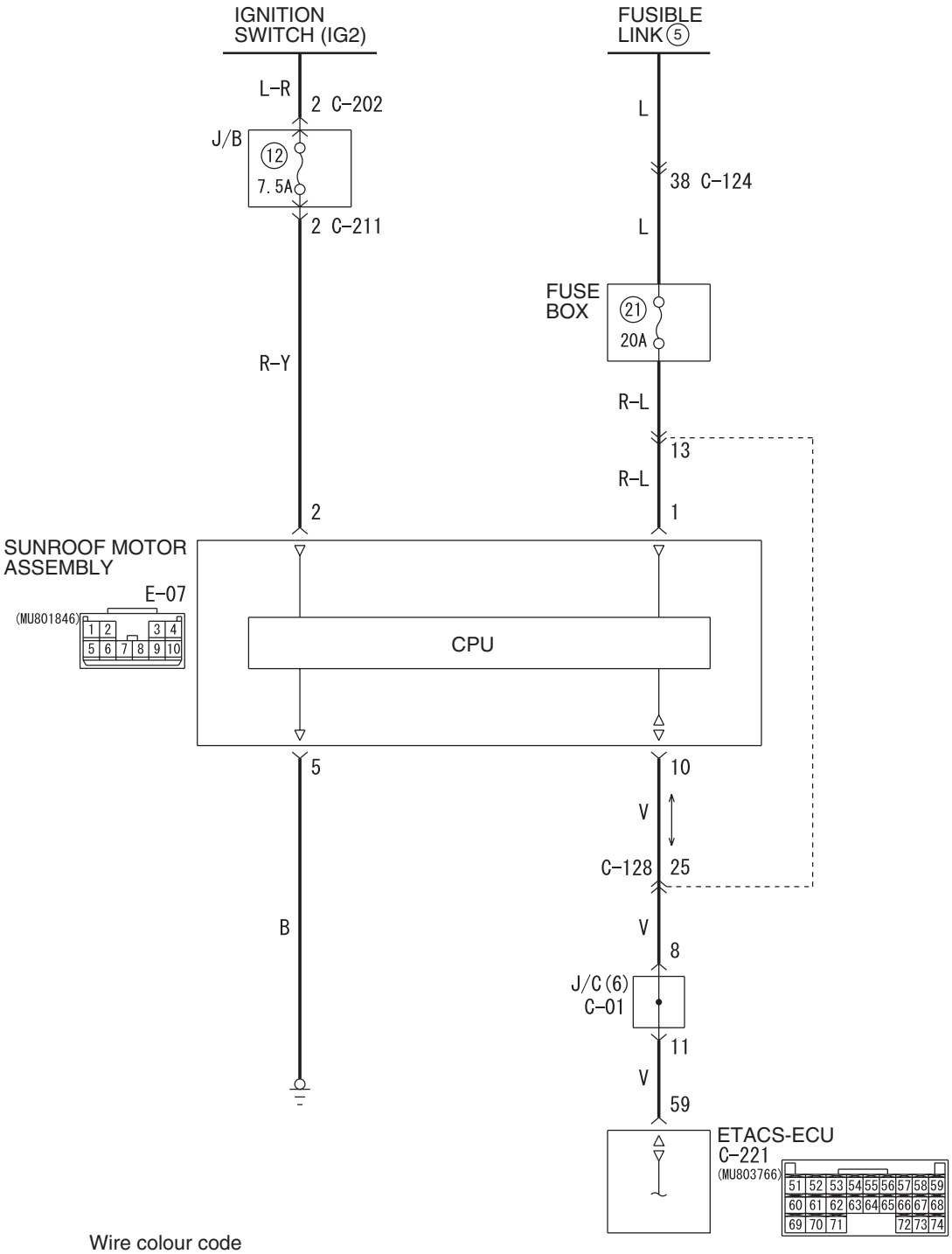

Wire colour code
B : Black LG : Light green G : Green L : Blue W : White Y : Yellow SB : Sky blue
BR : Brown O : Orange GR : Grey R : Red P : Pink V : Violet PU : Purple

W6X54X031A

Main Index
Group TOC

COMMENTS ON TROUBLE SYMPTOM

The sunroof motor assembly, the power supply circuit or the communication circuit for that assembly may be defective.

POSSIBLE CAUSES

- Malfunction of the sunroof motor assembly
- Damaged harness wires and connectors

DIAGNOSIS PROCEDURE

Step 1. ECU check on the SWS monitor

Check that the power supply and earth lines to the ETACS-ECU and the SWS communication lines are normal.

- Ignition switch: OFF

ECUS TO BE CHECKED

- ETACS ECU

OK: "OK" is displayed on the "ETACS ECU" menu.

Q: Is the check result normal?

YES : Go to Step 2.

NO : Refer to Inspection Procedure A-3 "Communication with ETACS-ECU is not possible" P.54C-51.

Step 2. Connector check: E-07 sunroof motor assembly connector

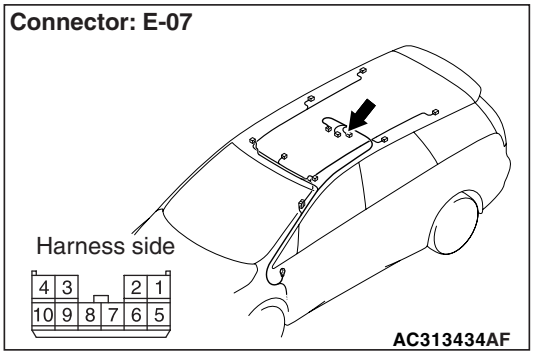

Q: Is the check result normal?

YES : Go to Step 3.

NO : Repair the defective connector.

Step 3. Voltage measurement at E-07 sunroof motor assembly connector.

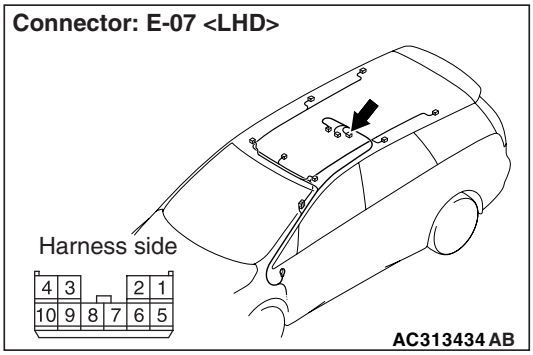

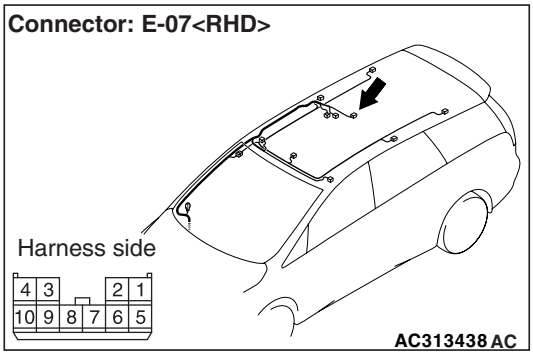

(1) Disconnect the connector, and measure at the wiring harness side.

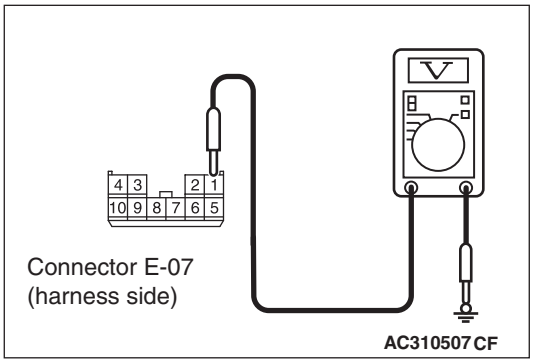

(2) Voltage between E-07 sunroof motor assembly connector terminal No.1 and body earth

OK: System voltage

Q: Is the check result normal?

YES : Go to Step 5.

NO : Go to Step 4.

Step 4. Check the wiring harness between E-07 sunroof motor assembly connector terminal No.1 and fusible link (5).

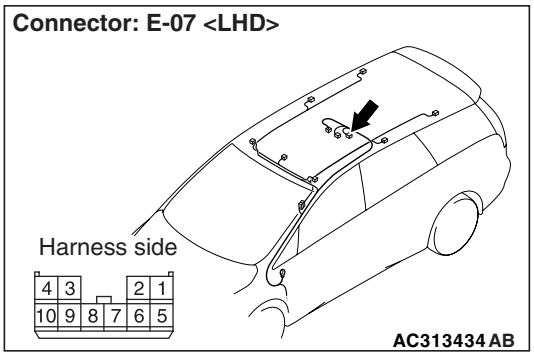

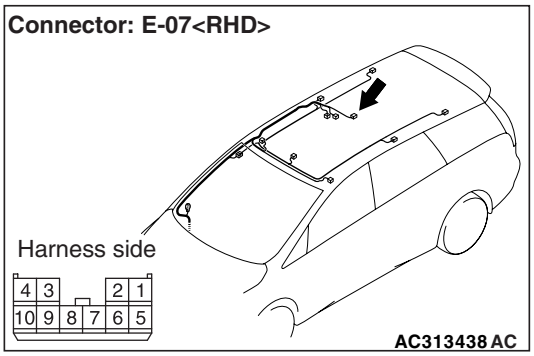

NOTE:

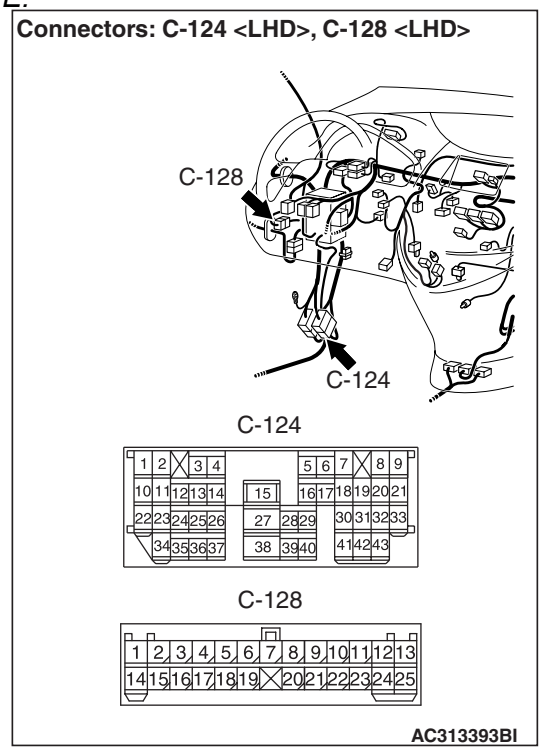

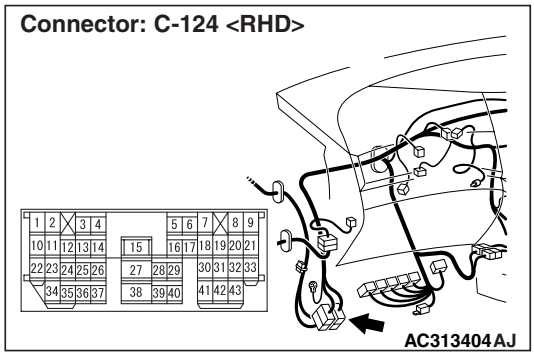

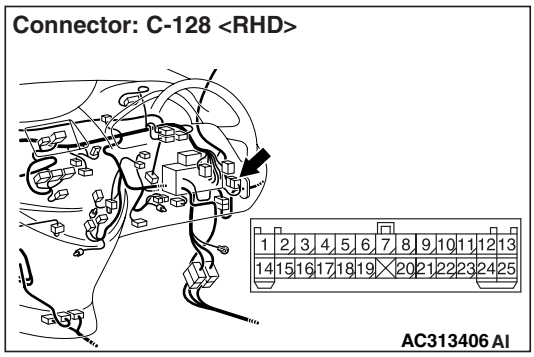

Prior to the wiring harness inspection, check intermediate connectors C-124, C-128, and repair if necessary.

- Check the power supply line for open circuit.

Q: Is the check result normal?

YES : The trouble can be an intermittent malfunction (Refer to GROUP 00 – How to Cope with Intermittent Malfunction P.00-5).

NO : Repair the wiring harness.

Main Index
Group TOC

Step 5. Voltage measurement at E-07 sunroof motor assembly connector.

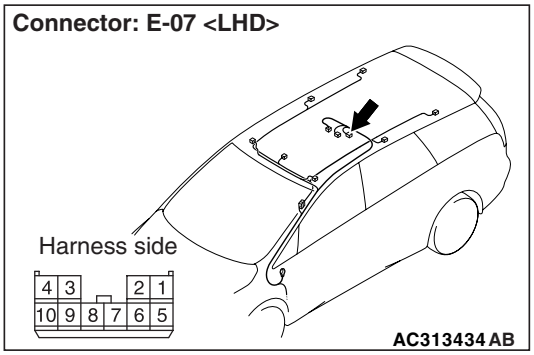

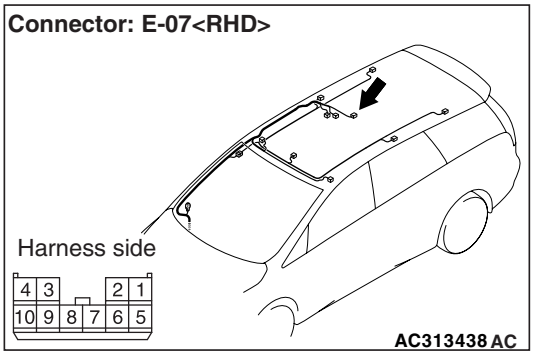

(1) Disconnect the connector, and measure at the wiring harness side.
(2) Turn the ignition switch to the ON position.

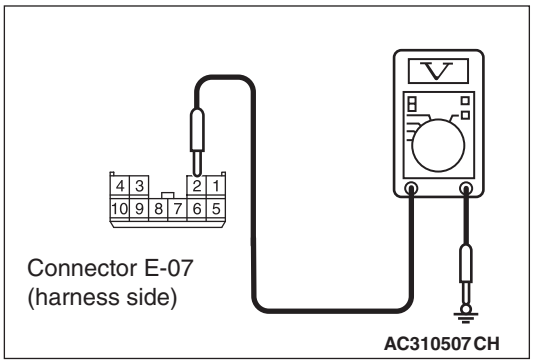

(3) Voltage between E-07 sunroof motor assembly connector terminal No.2 and body earth

OK: System voltage

Q: Is the check result normal?
YES : Go to Step 7.
NO : Go to Step 6.

Step 6. Check the wiring harness between E-07 sunroof motor assembly connector terminal No.2 and ignition switch (IG2).

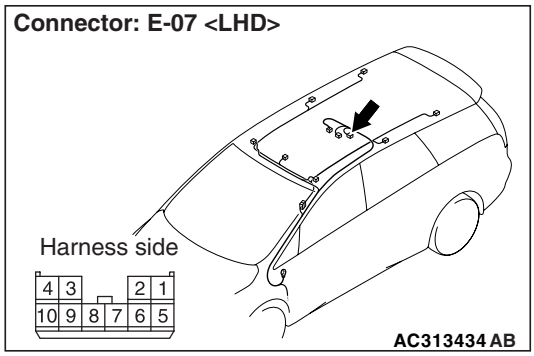

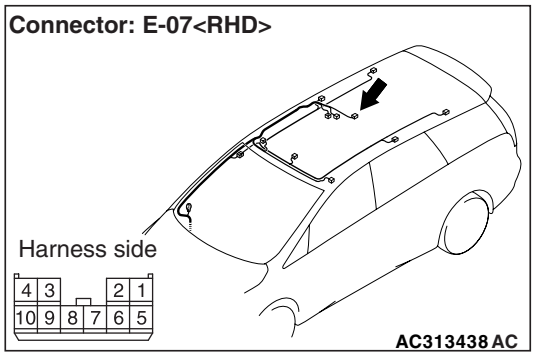

NOTE:

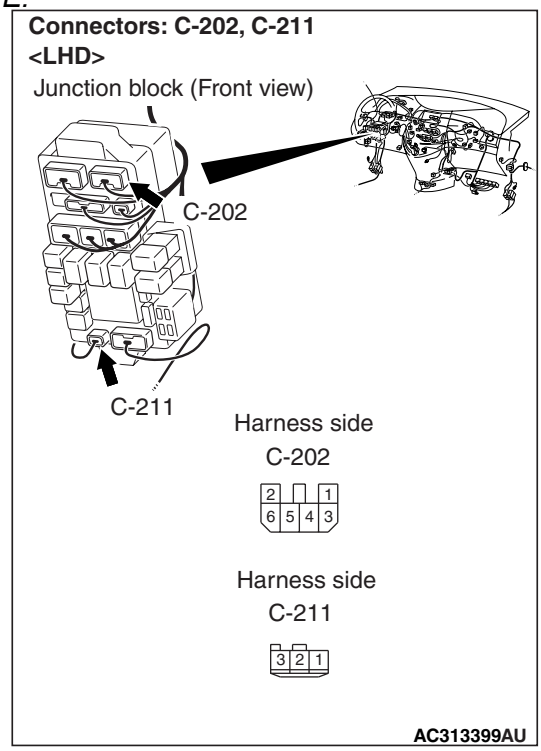

Main Index
Group TOC

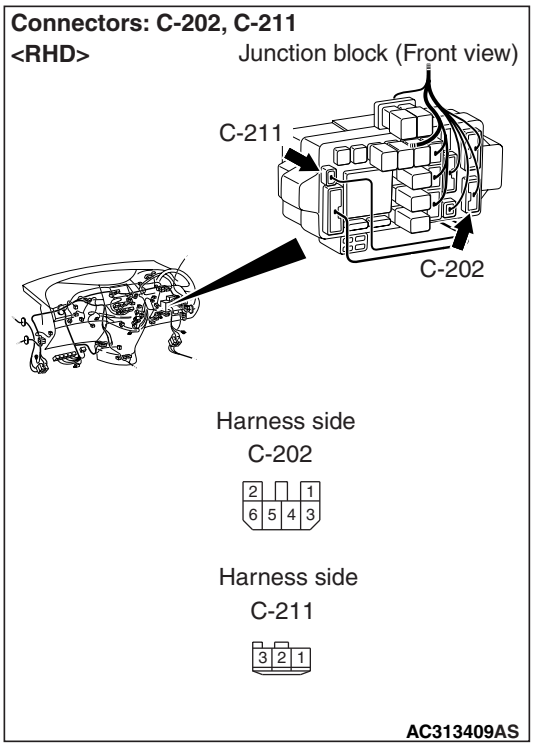

Prior to the wiring harness inspection, check junction block connectors C-202, C-211, and repair if necessary.

- Check the power supply line to the ignition switch (IG2) for open circuit.

Q: Is the check result normal?

YES : The trouble can be an intermittent malfunction (Refer to GROUP 00, How to Cope with Intermittent Malfunction P.00-5).

NO : Repair the wiring harness.

Step 7. Resistance measurement at E-07 sunroof motor assembly connector.

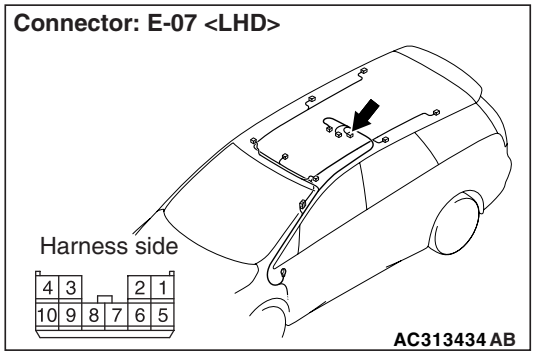

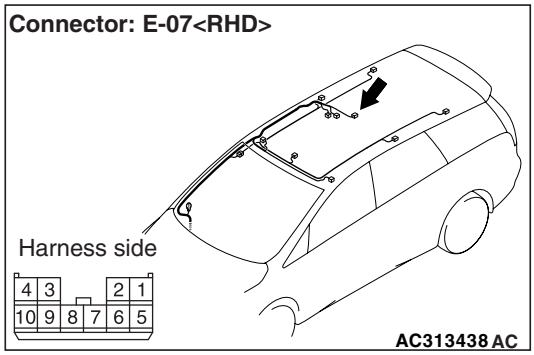

(1) Disconnect the connector, and measure at the wiring harness side.

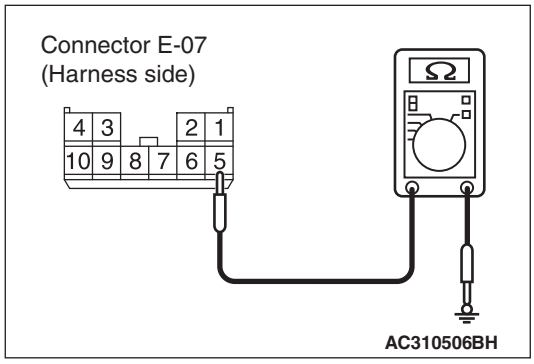

(2) Continuity between E-07 sunroof motor assembly connector terminal No.5 and body earth

OK: 2Ω or less

Q: Is the check result normal?

YES : Go to Step 9.

NO : Go to Step 8.

Main Index
Group TOC

Step 8. Check the wiring harness between E-07 sunroof motor assembly connector terminal No.5 and body earth.

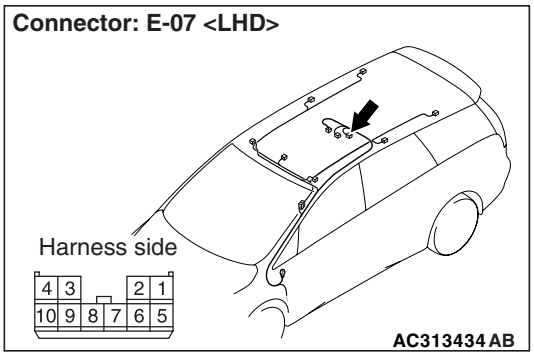

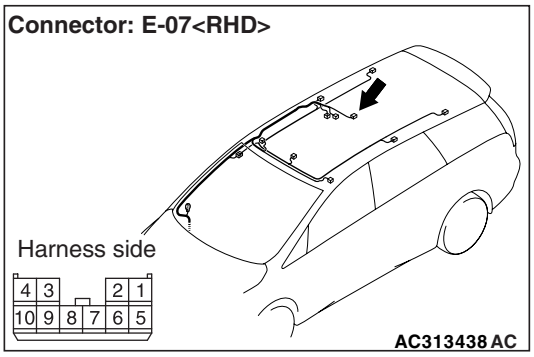

- Check the earth wires for open circuit.

Q: Is the check result normal?

YES : The trouble can be an intermittent malfunction (Refer to GROUP 00, How to Cope with Intermittent Malfunction P.00-5).

NO : Repair the wiring harness.

Step 9. Connector check: C-221 ETACS-ECU connector

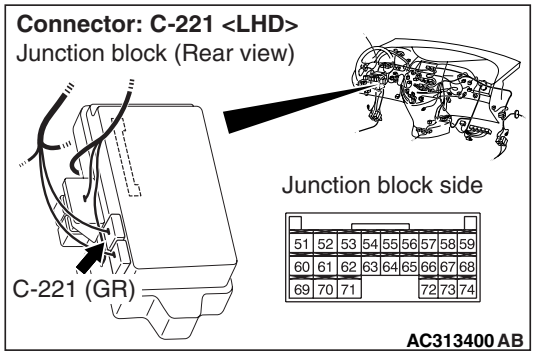

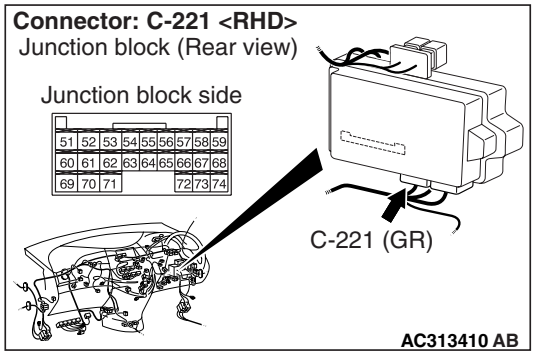

Q: Is the check result normal?

YES : Go to Step 10.

NO : Repair the defective connector.

Step 10. Check the wiring harness between E-07 sunroof motor assembly connector terminal No.10 and C-221 ETACS-ECU connector terminal No.59.

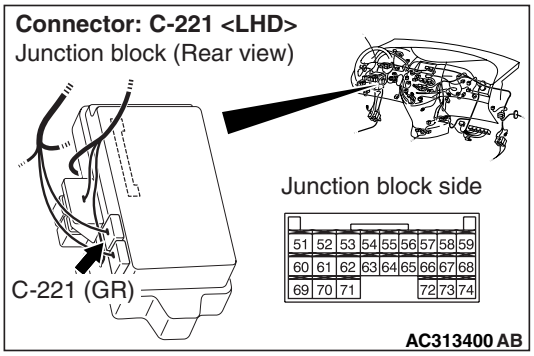

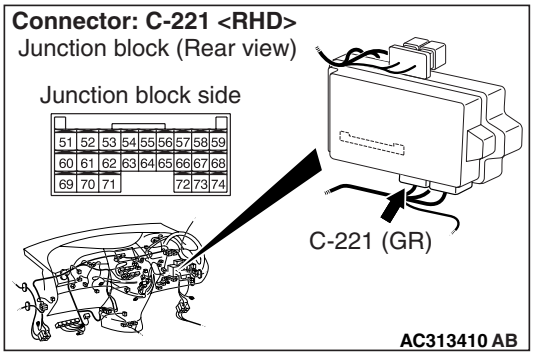

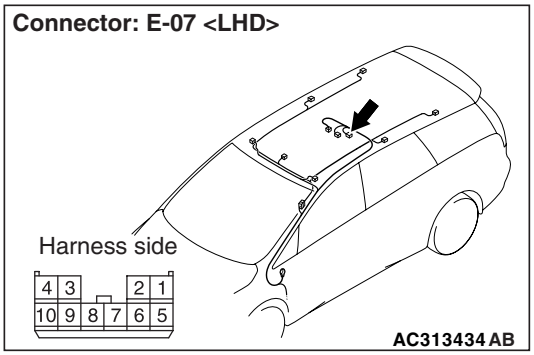

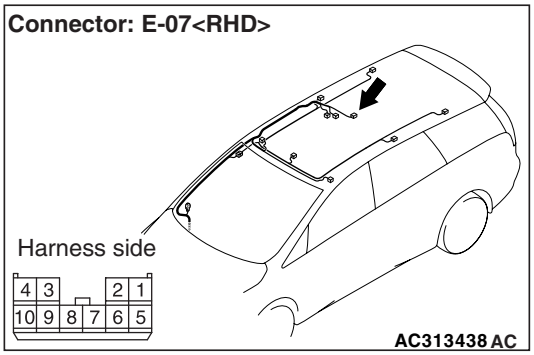

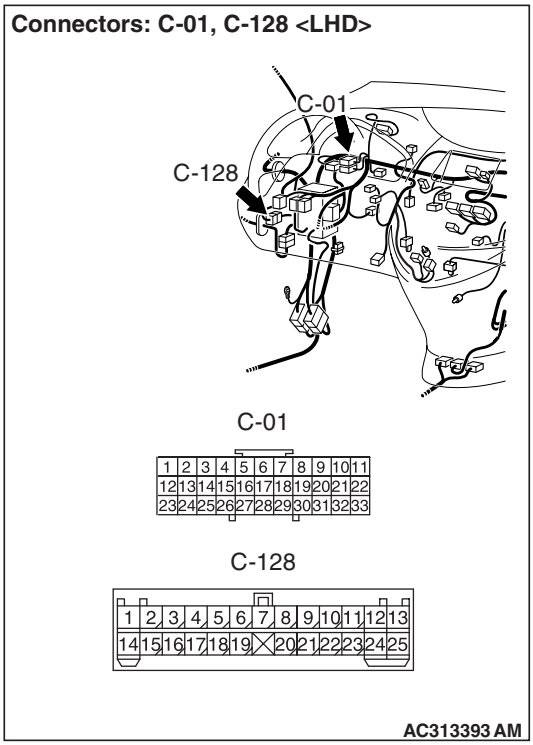

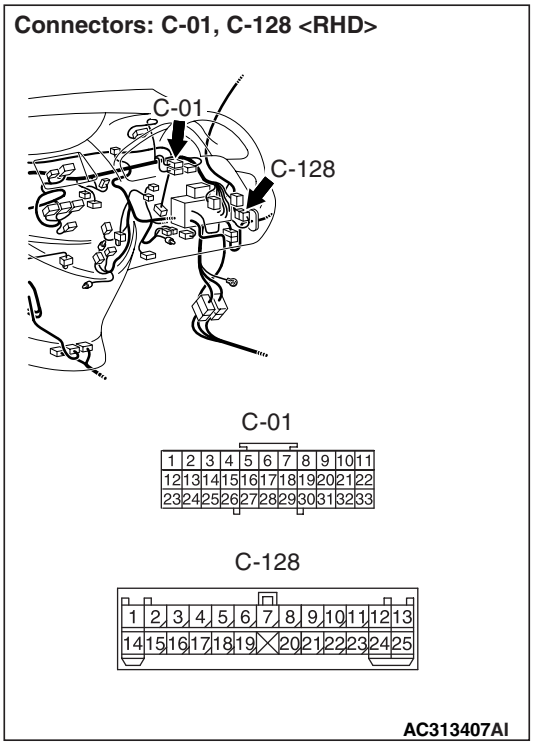

NOTE: Prior to the wiring harness inspection, check joint connector C-01 and intermediate connector C-128, and repair if necessary.

- Check the communication lines for open circuit.

Q: Is the check result normal?

YES : Go to Step 11.

NO : Repair the wiring harness.

Main Index
Group TOC

Step 11. ECU check on the SWS monitor

Check that the power supply and earth lines to the sunroof motor assembly and the SWS communication lines are normal.

- Turn the ignition switch to the ON position.

ECUS TO BE CHECKED

- SUNROOF ECU

  OK: "OK" is displayed on the "SUNROOF ECU" menu.

Q: Is the check result normal?

YES : . The trouble can be an intermittent malfunction (Refer to GROUP 00, How to Cope with Intermittent Malfunction P.00-5).

NO : . Replace the sunroof motor assembly.

BUZZER

INSPECTION PROCEDURE B-1: Lamp reminder buzzer function does not work normally.

⚠ CAUTION

Whenever the ECU is replaced, ensure that the input and output signal circuits are normal.

Lamp Reminder Tone Alarm Function

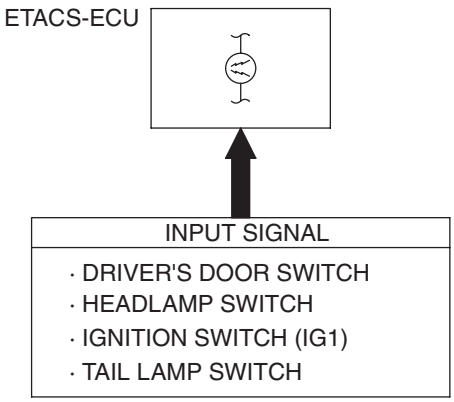

W3Z10E07AA

COMMENTS ON TROUBLE SYMPTOM

The ETACS-ECU operates this function in accordance with the input signals below.

- Ignition switch (IG1)
- Driver's door switch
- Tail lamp switch

If this function does not work normally, these input signal circuit(s) or the ETACS-ECU may be defective.

POSSIBLE CAUSES

- Malfunction of the driver's door switch
- Malfunction of the column switch
- Malfunction of the ETACS-ECU
- Damaged harness wires and connectors

Main Index
Group TOC

DIAGNOSIS PROCEDURE

Step 1. ECU check by using the SWS monitor
Check that the power supply and earth lines to the ETACS-ECU and the column switch (column-ECU) and the SWS communication lines are normal.
- Ignition switch: OFF

ECUS TO BE CHECKED
- ETACS ECU
- COLUMN ECU

OK: "OK" are displayed for all the items

Q: Are the check result normal?
"OK" is displayed for all the items : Go to Step 2.
"NG" is displayed on the "ETACS ECU" menu. : Refer to Inspection Procedure A-3 "Communication with ETACS-ECU is not possible P.54C-51."
"NG" is displayed on the "COLUMN ECU" menu. : Refer to Inspection Procedure A-2 "Communication with column switch (column-ECU) is not possible P.54C-45."

Step 2. Function diagnosis by using the SWS monitor
Check the SWS communication signal, which are related to the lamp reminder function.

<Selected item> BUZZER - LGT MONI. ALRM
- Ignition switch: OFF (key removed)
- lighting switch: HEAD
- Driver's door: open

Item No.	Item name	Normal condition
Item 00	HEADLAMP SW	ON when the lighting switch is at HEAD
Item 01	TAIL LAMP SW	ON when the lighting switch is at TAIL
Item 30	IG SW(IG1)	OFF
Item 32	DR DOOR SW	ON
Item 43	BUZZER	ON

OK: Normal conditions are displayed for all the items.

Q: Are the check result normal?
Normal conditions are displayed for all the items : Go to Step 3.
Normal condition is not displayed for item No.00 or No.01 : Refer to inspection procedure P-6 "The column switch (lighting and turn-signal lamp switch) signal is not received P.54C-350."
Normal condition is not displayed for item No.30 : Refer to inspection procedure P-2 "The ignition switch (IG1) signal is not received P.54C-335."
Normal condition is not displayed for item No.32 : Refer to inspection procedure P-5 "The driver's door switch signal is not received P.54C-346 <LH drive vehicles> or P.54C-348 <RH drive vehicles>."
Normal condition is not displayed for item No.43 : Replace the ETACS-ECU.

Step 3. Retest the system.
The lamp reminder buzzer function should work normally.

Q: Is the check result normal?
YES : The trouble can be an intermittent malfunction (Refer to GROUP 00 – How to Cope with Intermittent Malfunction P.00-5).
NO : Replace the ETACS-ECU.

Main Index
Group TOC

INSPECTION PROCEDURE B-2: Seat belt warning buzzer function does not work normally. <Vehicles for GCC>

⚠ CAUTION
Whenever the ECU is replaced, ensure that the input and output signal circuits are normal.

Seat Belt Warning Buzzer Function

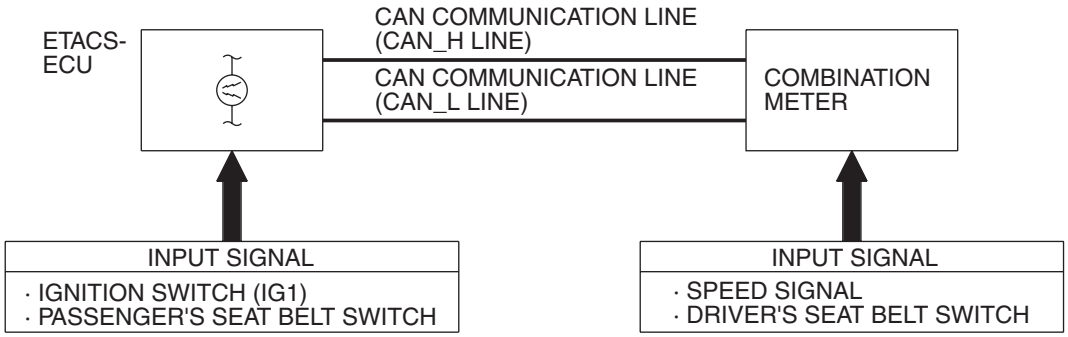

W4X54E166A

COMMENTS ON TROUBLE SYMPTOM

If the function does not work normally, the input circuit system from the switches or the ETACS-ECU may be defective (refer to "CIRCUIT OPERATION").

POSSIBLE CAUSES

- Malfunction of the ETACS-ECU
- Malfunction of the driver's seat belt switch
- Damaged harness wires and connectors

DIAGNOSTIC PROCEDURE

Step 1. M.U.T.-III CAN bus diagnostics

Use the M.U.T.-III to diagnose the CAN bus lines.

Q: Is the check result normal?
YES : Go to Step 2.
NO : Repair the CAN bus line (Refer to GROUP 54F, Diagnosis P.54F-13).

Step 2. ECU check by using the SWS monitor

Check that the power supply and earth lines to the ETACS-ECU and the SWS communication lines are normal.

- Turn the ignition switch to the ON position.

ECU TO BE CHECKED

- ETACS ECU

OK: "OK" is displayed on the "ETACS ECU" menu.

Q: Is the check result normal?
YES : Go to Step 3.
NO : Refer to Inspection Procedure A-3 "Communication with ETACS-ECU is not possible P.54C-51."

Step 3. SWS monitor data list.

Check the SWS communication signal, which are related to the seat belt warning buzzer function.

<Selected item> ETACS ECU

- Ignition switch: ON

Item No.	Item name	Normal condition
Item 30	IG SW(IG1)	ON

OK: Normal condition is displayed.

Q: Is the check result normal?
YES : Go to Step 4.
NO : Refer to Inspection Procedure P-2 "The ignition switch (IG1) signal is not received P.54C-335."

Main Index
Group TOC

Step 4. ETACS switch data by using the SWS monitor

Check the ETACS-ECU signal related to the seat belt warning buzzer function.

- Driver's seat belt switch: ON (Unfastened)

Item No.	Item name	Normal condition
Item 12	Driver's seat belt switch	ON

OK: Normal condition is displayed.

Q: Are the check result normal?

YES : Go to Step 5.

NO : Refer to inspection procedure P-17 "The driver's seat belt switch signal is not received <LH drive vehicles>P.54C-401 ."

Step 5. ETACS ANALOG data by using the SWS monitor.

Check the ETACS-ECU signal related to the seat belt warning buzzer function.

- Set the simulated vehicle speed at approximately 10km/h.

Item No.	Item name	Normal condition
Item 03	Vehicle speed	8 – 10km/h

OK: Normal condition is displayed.

Q: Is the check result normal?

YES : Go to Step 6.

NO : Refer to inspection procedure P-23 "The vehicle speed signal is not received P.54C-425."

Step 6. Retest the system.

Check that the seat belt warning buzzer function work normally.

Q: Is the check result normal?

YES : The trouble can be an intermittent malfunction (Refer to GROUP 00 – How to Cope with Intermittent Malfunction P.00-5).

NO : Replace the ETACS-ECU.

INSPECTION PROCEDURE B-2: Seat belt warning buzzer function does not work normally. <Vehicles for Australia and New Zealand>

⚠ CAUTION

Whenever the ECU is replaced, ensure that the input and output signal circuits are normal.

Seat Belt Warning Buzzer Function

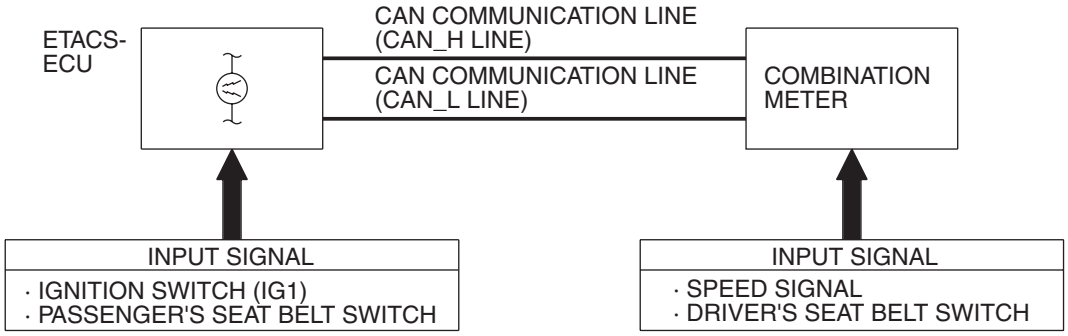

W4X54E166A

COMMENTS ON TROUBLE SYMPTOM

If the function does not work normally, the input circuit system from the switches or the ETACS-ECU may be defective (refer to "CIRCUIT OPERATION").

Main Index
Group TOC

POSSIBLE CAUSES

- Malfunction of the ETACS-ECU
- Malfunction of the driver's seat belt switch
- Malfunction of the passenger's seat belt switch
- Damaged harness wires and connectors

DIAGNOSTIC PROCEDURE

Step 1. M.U.T.-III CAN bus diagnostics
Use the M.U.T.-III to diagnose the CAN bus lines.

Q: Is the check result normal?
YES : Go to Step 2.
NO : Repair the CAN bus line (Refer to GROUP 54F, Diagnosis P.54F-13).

Step 2. ECU check by using the SWS monitor
Check that the power supply and earth lines to the ETACS-ECU and the SWS communication lines are normal.

- Turn the ignition switch to the ON position.

ECU TO BE CHECKED

- ETACS ECU

OK: "OK" is displayed on the "ETACS ECU" menu.

Q: Is the check result normal?
YES : Go to Step 3.
NO : Refer to Inspection Procedure A-3 "Communication with ETACS-ECU is not possible P.54C-51."

Step 3. SWS monitor data list.
Check the SWS communication signal, which are related to the seat belt warning buzzer function.

<Selected item> ETACS ECU

- Ignition switch: ON

Item No.	Item name	Normal condition
Item 30	IG SW(IG1)	ON

OK: Normal condition is displayed.

Q: Is the check result normal?
YES : Go to Step 4.
NO : Refer to Inspection Procedure P-2 "The ignition switch (IG1) signal is not received P.54C-335."

Step 4. Check the seat belt switch, where the seat belt warning buzzer does not function normally.

Q: When the seatbelt switch is operated, which seatbelt warning buzzer operates?
Driver's seat belt : Go to Step 6.
Passenger's seat belt : Go to Step 5.

Step 5. ETACS switch data by using the SWS monitor
Check the ETACS-ECU signal related to the seat belt warning buzzer function.

- Driver's seat belt switch: ON (Unfastened)

Item No.	Item name	Normal condition
Item 12	Driver's seat belt switch	ON

OK: Normal condition is displayed.

Q: Are the check result normal?
YES : Go to Step 7.
NO : Refer to inspection procedure P-17 "The driver's seat belt switch signal is not received <RH drive vehicles>P.54C-404 ."

Step 6. ETACS switch data by using the SWS monitor
Check the ETACS-ECU signal related to the seat belt warning buzzer function.

- Passenger's seat belt switch: ON (Unfastened)
- Seat occupancy sensor: ON (Seat occupied)

Item No.	Item name	Normal condition
Item 43	Passenger's seat belt switch	ON

OK: Normal condition is displayed.

Q: Are the check result normal?
YES : Go to Step 7.
NO : Refer to inspection procedure P-18 "The front passenger's seat belt switch signal is not received P.54C-407.

Step 7. ETACS ANALOG data by using the SWS monitor.
Check the ETACS-ECU signal related to the seat belt warning buzzer function.

- Set the simulated vehicle speed at approximately 10km/h.

Item No.	Item name	Normal condition
Item 03	Vehicle speed	8 – 10km/h

OK: Normal condition is displayed.

Q: Is the check result normal?
YES : Go to Step 8.
NO : Refer to inspection procedure P-23 "The vehicle speed signal is not received P.54C-425."

Main Index
Group TOC

Step 8. Retest the system.
Check that the seat belt warning buzzer function work normally.

Q: Is the check result normal?
YES : The trouble can be an intermittent malfunction (Refer to GROUP 00 – How to Cope with Intermittent Malfunction P.00-5).
NO : Replace the ETACS-ECU.

INSPECTION PROCEDURE B-3: Door-ajar warning buzzer function does not work.

⚠ CAUTION
Whenever the ECU is replaced, ensure that the input and output signal circuits are normal.

Door-Ajar Warning Buzzer Function

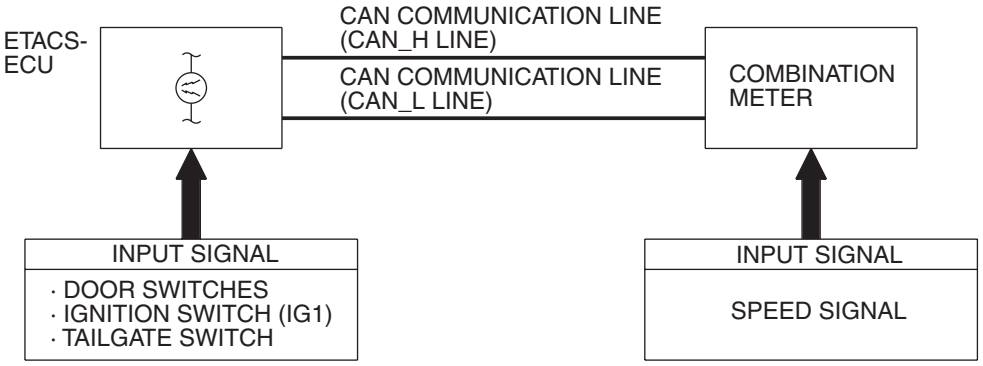

W4X54E220A

COMMENTS ON TROUBLE SYMPTOM

The ETACS-ECU operates this function in accordance with the input signals below.
- Ignition switch (IG1)
- All of the door switches
- Vehicle speed signal

If this function does not work normally, these input signal circuit(s) or the ETACS-ECU may be defective. Note that this function can be disabled/enabled by the customize function (default setting; enabled). In order to change the setting, the SWS monitor is required.

POSSIBLE CAUSES

- Malfunction of the door switches
- Malfunction of the ETACS-ECU
- Damaged harness wires and connectors

DIAGNOSTIC PROCEDURE

Step 1. M.U.T.-III CAN bus diagnostics
Use the M.U.T.-III to diagnose the CAN bus lines.

Q: Is the check result normal?
YES : Go to Step 2.
NO : Repair the CAN bus line (Refer to GROUP 54F, Diagnosis P.54F-13).

Step 2. Customize function by using the SWS monitor
Use the SWS monitor customisation function to confirm that "Door ajar buzzer" is set to other than "Without function" (one of the settings below).
- With function
- Sequential ope.

Q: Is the check result normal?
YES : GO to Step 3.
NO : Set "Door ajar buzzer" to other than "Without function" by using the SWS monitor customisation function (Refer to Customize adjustment P.54C-432).

Main Index
Group TOC

Step 3. ECU check by using the SWS monitor
Check that the power supply and earth lines to the ETACS-ECU and the SWS communication lines are normal.
- Ignition switch: ON

ECU TO BE CHECKED
- ETACS ECU

OK: "OK" is displayed on the "ETACS ECU" menu.

Q: Is the check result normal?
YES : Go to Step 4.
NO : Refer to Inspection Procedure A-3 "Communication with ETACS-ECU is not possible P.54C-51."

Step 4. SWS monitor data list
Check the SWS communication signal, which is related to the door-ajar warning buzzer function.

<Selected item> ETACS
- Ignition switch: ON
- Driver's door: Open

Item No.	Item name	Normal condition
Item 30	IG SW(IG1)	ON
Item 32	DR DOOR SW	ON
Item 43	BUZZER	ON

OK: Normal conditions are displayed for all the items.

Q: Are the check result normal?
Normal conditions are displayed for all the items : Go to Step 5.
Normal condition is not displayed for item No.30. : Refer to inspection procedure P-2 "The ignition switch (IG1) signal is not received P.54C-335."
Normal condition is not displayed for item No.32. : Refer to inspection procedure P-5 "The driver's door switch signal is not received <LH drive vehicles>P.54C-346 or <RH drive vehicles>P.54C-348 ."
Normal condition is not displayed for item No.43. : Replace the ETACS-ECU.

Step 5. ETACS switch data by using the SWS monitor
Check the ETACS-ECU input signal related to the door-ajar warning buzzer function.
- Doors other than the driver's door (including the tailgate): Closed to open

Item No.	Item name	Normal condition
Item 05	Passenger's door switch	from OFF to ON
Item 07	Trunk or liftg gate door switch	from OFF to ON
Item 41	Rear door (right side) switch	from OFF to ON
Item 42	Rear door (left side) switch	from OFF to ON

OK: Normal conditions are displayed for all the items.

Q: Are the check result normal?
YES : Go to Step 6.
NO : Refer to inspection procedure P-12 "All the door switch signals are not received P.54C-373."

Step 6. ETACS ANALOG data by using the SWS monitor.
Check the ETACS-ECU signal related to the door-ajar warning buzzer function.
- Set the simulated vehicle speed at approximately 10km/h.

Item No.	Item name	Normal condition
Item 03	Vehicle speed	8 – 10km/h

OK: Normal condition is displayed.

Q: Is the check result normal?
YES : Go to Step 7.
NO : Refer to inspection procedure P-23 "The vehicle speed signal is not received P.54C-425."

Step 7. Retest the system.
Check that the door-ajar warning buzzer function works normally.

Q: Is the check result normal?
YES : The trouble can be an intermittent malfunction (Refer to GROUP 00 – How to Cope with Intermittent Malfunction P.00-5).
NO : Replace the ETACS-ECU

Main Index
Group TOC

INSPECTION PROCEDURE B-4: Turn-signal lamp operation sound function does not work normally.

⚠ CAUTION
Whenever the ECU is replaced, ensure that the input and output signal circuits are normal.

Turn-Signal Lamp Operation Sound Function

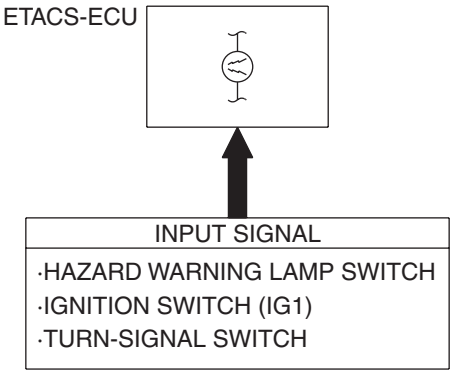

W4X54E225A

COMMENTS ON TROUBLE SYMPTOM

The ETACS-ECU operates this function in accordance with the input signals below.

- Turn-signal lamp switch
- Hazard warning lamp switch

If this function does not work normally, these input signal circuit(s) or the ETACS-ECU may be defective. Note that this function can be disabled/enabled by the customize function (default setting; disabled). In order to change the setting, the SWS monitor is required.

POSSIBLE CAUSES

- Malfunction of the column switch
- Malfunction of the ETACS-ECU
- Damaged harness wires and connectors

DIAGNOSTIC PROCEDURE

Step 1. Check that the turn-signal lamps operate.
When the turn-signal lamp switch or the hazard warning lamp switch is operated, check that the turn-signal lamps flash.

Q: Is the check result normal?
YES : Go to Step 2.
NO : First, repair the turn-signal lamp(s) (Refer to Trouble Symptom Chart P.54C-32).

Step 2. Customize function by using the SWS monitor
Use the SWS monitor customisation function to confirm that "T/SIG.BUZZER" is set to "W.FUNCTION."

Q: Is the check result normal?
YES : Go to Step 3.
NO : Use the SWS monitor customization function to set "T/SIG.BUZZER" to "W.FUNCTION" (Refer to P.54C-432).

Main Index
Group TOC

Step 3. ECU check by using the SWS monitor

Check that the power supply and earth lines to the ETACS-ECU and the column switch (column-ECU) and the SWS communication lines are normal.

- Ignition switch: ON

ECUS TO BE CHECKED

- ETACS ECU
- COLUMN ECU

OK: "OK" are displayed for all the items

Q: Are the check result normal?

Normal conditions are displayed for all the items. : Go to Step 4.

"NG" is displayed on the "ETACS ECU" menu. : Refer to Inspection Procedure A-3 "Communication with ETACS-ECU is not possible P.54C-51."

"NG" is displayed on the "COLUMN ECU" menu. : Refer to Inspection Procedure A-2 "Communication with column switch (column-ECU) is not possible P.54C-45."

Step 4. SWS monitor data list

Check the SWS communication input signal, which are related to the turn-signal lamp operation sound function.

<Selected item> ETACS-ECU

- Hazard warning switch: ON

Item No.	Item name	Normal condition
Item 43	BUZZER	ON

OK: Normal condition is displayed.

Q: Is the check result normal?

YES : Go to Step 5.

NO : Replace the ETACS-ECU.

Step 5. Retest the system.

Check that the turn-signal lamp operation sound function works normally.

Q: Is the check result normal?

YES : The trouble can be an intermittent malfunction (Refer to GROUP 00 – How to Cope with Intermittent Malfunction P.00-5).

NO : Replace the ETACS-ECU.

INSPECTION PROCEDURE B-5: Ignition key reminder buzzer function does not work. <Vehicles for GCC only>

⚠ CAUTION

Whenever the ECU is replaced, ensure that the input and output signal circuits are normal.

Ignition Key Reminder Buzzer

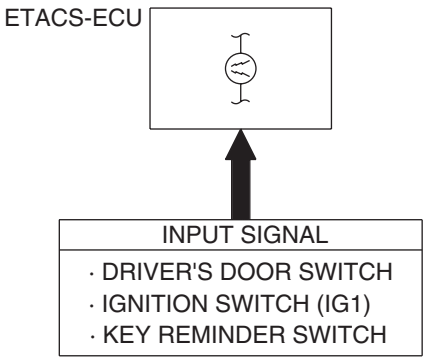

W4X54X101A

Main Index
Group TOC

COMMENTS ON TROUBLE SYMPTOM

The ETACS-ECU operates this function in accordance with the input signals below.

- Ignition switch (IG1)
- Key reminder switch
- Driver's door switch

If this function does not work normally, these input signal circuit(s) or the ETACS-ECU may be defective.

POSSIBLE CAUSES

- Malfunction of the key reminder switch
- Malfunction of the driver's door switch
- Malfunction of the ETACS-ECU
- Damaged harness wires and connectors

DIAGNOSTIC PROCEDURE

Step 1. ECU check by using the SWS monitor

Check that the power supply and earth lines to the ETACS-ECU and the SWS communication lines are normal.

- Ignition switch: ON

ECU TO BE CHECKED

- ETACS ECU

OK: "OK" is displayed on the "ETACS ECU" menu.

Q: Is the check result normal?

YES : Go to Step 2.

NO : Refer to Inspection Procedure A-3 "Communication with ETACS-ECU is not possible P.54C-51."

Step 2. Function diagnosis by using the SWS monitor

Check the SWS communication signals, which are related to the ignition key reminder function.

<Selected item> BUZZER - KEY REMND. ALM

- Ignition switch: OFF (key inserted)
- Driver's door: open

Item No.	Item name	Normal condition
Item 30	IG SW(IG1)	OFF
Item 32	DR DOOR SW	ON
Item 43	BUZZER	ON

OK: Normal conditions are displayed for all the items.

Q: Is the check result normal?

Normal conditions are displayed for all the items. : Go to Step 3.

Normal condition is not displayed for item No.30. : Refer to Inspection Procedure P-2 "The ignition switch (IG1) signal is not received P.54C-335."

Normal condition is not displayed for item No.32. : Refer to Inspection Procedure P-5 "The driver's door switch signal is not received <LH drive vehicles>P.54C-346 ro <RH drive vehicles>P.54C-348 ."

Normal condition is not displayed for item No.43. : Go to Step 3.

Step 3. ETACS switch data by using the SWS monitor

Check the ETACS-ECU signal related to the ignition key reminder function.

- Ignition switch: OFF (key inserted)

Item No.	Item name	Normal condition
Item 03	Key reminder switch	OFF

OK: Normal condition is displayed.

Q: Is the check result normal?

YES : Go to Step 4.

NO : Refer to inspection procedure P-10 "The key reminder switch signal is not received P.54C-364."

Step 4. Retest the system.

The ignition key reminder buzzer function should work normally.

Q: Is the check result normal?

YES : The trouble can be an intermittent malfunction (Refer to GROUP 00 – How to Cope with Intermittent Malfunction P.00-5).

NO : Replace the ETACS-ECU.

Main Index
Group TOC

INSPECTION PROCEDURE B-6: The speed alarm buzzer does not work. <Vehicles for GCC only>

⚠ CAUTION

Whenever the ECU is replaced, ensure that the input and output signal circuits are normal.

COMMENTS ON TROUBLE SYMPTOM

The ETACS-ECU operates this function in accordance with the vehicle speed signal.
If this function does not work normally, the engine-A/T-ECU or the ETACS-ECU may be defective.

POSSIBLE CAUSES

- Malfunction of the engine-A/T-ECU
- Malfunction of the ETACS-ECU
- Damaged harness wires and connectors

DIAGNOSTIC PROCEDURE

Step 1. M.U.T.-III CAN bus diagnostics

Use the M.U.T.-III to diagnose the CAN bus lines.

Q: Is the check result normal?

YES : Go to Step 2.

NO : Repair the CAN bus line (Refer to GROUP 54F, Diagnosis P.54F-13).

Step 2. ETACS ANALOG data by using the SWS monitor.

Check the ETACS-ECU signal related to the speed alarm buzzer function.

- Set the simulated vehicle speed at approximately 10km/h.

Item No.	Item name	Normal condition
Item 03	Vehicle speed	8 – 10km/h

OK: Normal condition is displayed.

Q: Is the check result normal?

YES : Go to Step 3.

NO : Refer to inspection procedure P-23 "The vehicle speed signal is not received P.54C-425."

Step 3. Retest the system.

Check that the speed alarm buzzer works normally.

Q: Is the check result normal?

YES : The trouble can be an intermittent malfunction (Refer to GROUP 00 – How to Cope with Intermittent Malfunction P.00-5).

NO : Replace the ETACS-ECU.

Main Index
Group TOC

CENTRAL DOOR LOCKING SYSTEM

INSPECTION PROCEDURE C-1: central door locking system does not work.

⚠ CAUTION

Whenever the ECU is replaced, ensure that the input and output signal circuits are normal.

Central Door Lock Power Supply Circuit

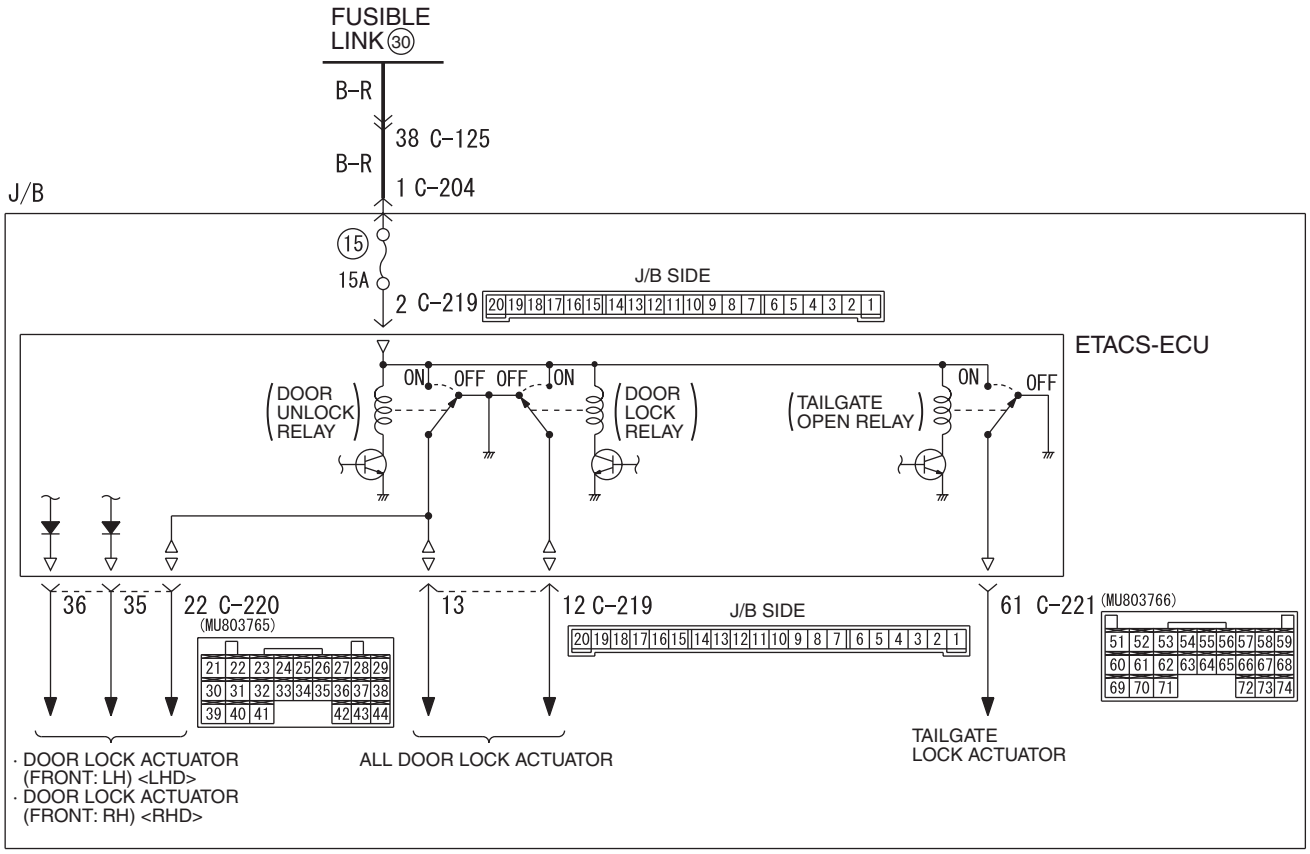

W4X54E040A

COMMENT ON TROUBLE SYMPTOM

If the central door locking system does not work at all, the ETACS-ECU may be defective.

POSSIBLE CAUSES

- Malfunction of the ETACS-ECU
- Damaged harness wires and connectors

Main Index
Group TOC

DIAGNOSIS PROCEDURE

Step 1. Check that the central door locking system functions by using the front passenger's key cylinder.

Check that the central door locking system works normally by means of the front passenger's door key cylinder.

Q: Is the check result normal?

YES : Go to Step 2.

NO : Refer to Inspection Procedure C-3 "The central door locking system does not function by using the passenger's door key cylinder P.54C-86."

Step 2. ECU check by using the SWS monitor

Check that the power supply and earth lines to the ETACS-ECU and the SWS communication lines are normal.

- Ignition switch: OFF

ECU TO BE CHECKED

- ETACS ECU

OK: "OK" is displayed on the "ETACS ECU" menu.

Q: Is the check result normal?

YES : Go to Step 3.

NO : Refer to Inspection Procedure A-3 "Communication with ETACS-ECU is not possible P.54C-51."

Step 3. Connector check: C-219 ETACS-ECU connector

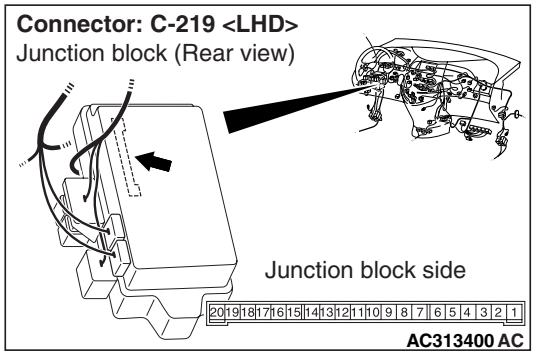

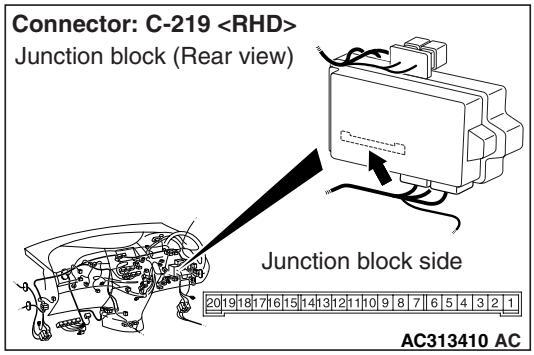

Q: Is the check result normal?

YES : Go to Step 4.

NO : Repair the defective connector.

Main Index
Group TOC

Step 4. Check the wiring harness between C-219 ETACS-ECU connector terminal No.2 and fusible link (30).

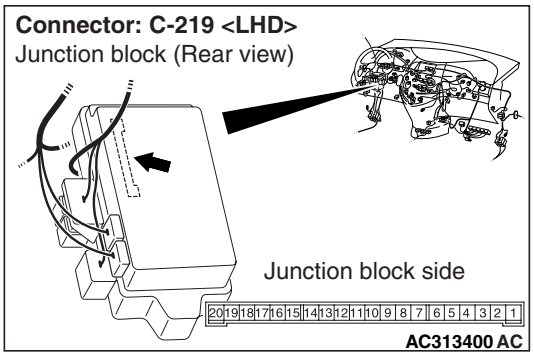

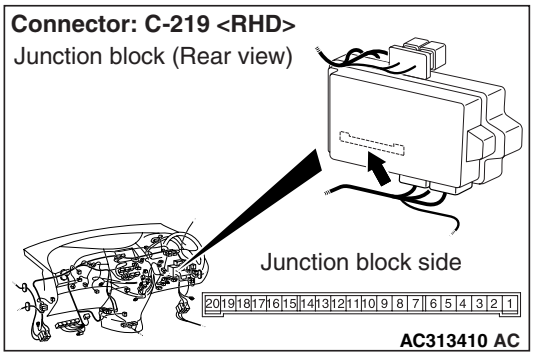

NOTE:

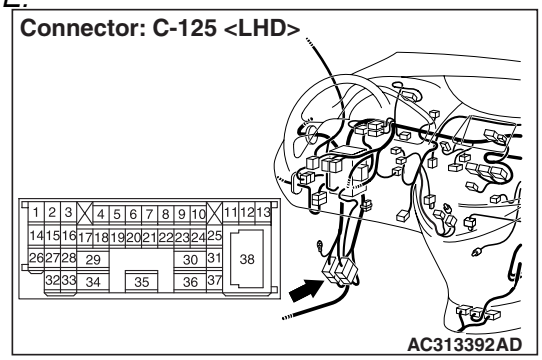

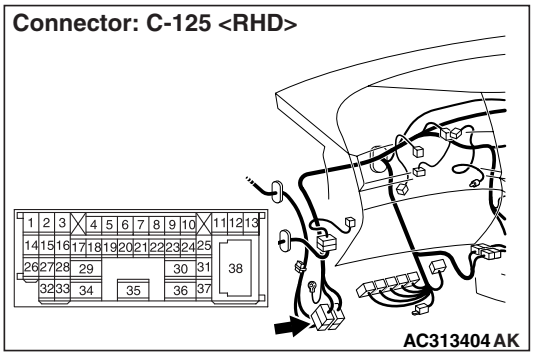

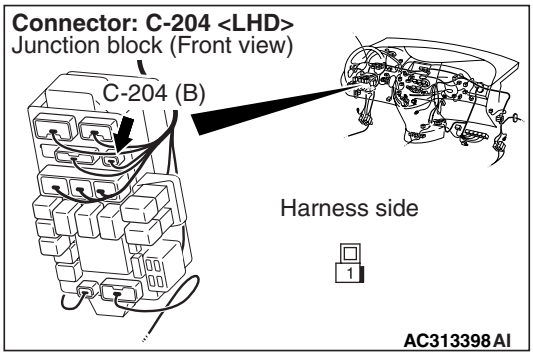

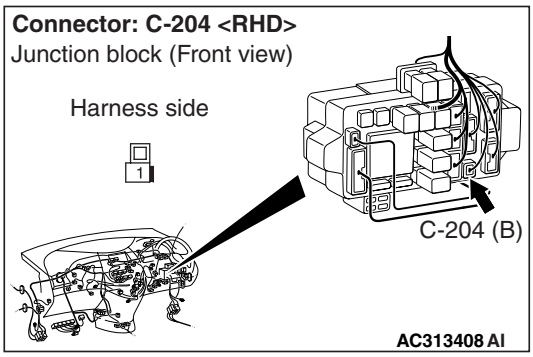

Prior to the wiring harness inspection, check intermediate connector C-125 and junction block connector C-204, and repair if necessary.

- Check the power supply line for open or short circuit.

Q: Is the check result normal?
YES : Go to Step 5.
NO : Repair the wiring harness.

Step 5. Retest the system.
Check that the central door locking system works normally.

Q: Is the check result normal?
YES : The trouble can be an intermittent malfunction (Refer to GROUP 00 – How to Cope with Intermittent Malfunction P.00-5).
NO : Replace the ETACS-ECU.

Main Index
Group TOC

INSPECTION PROCEDURE C-2: The central door locking system does not function by using the driver's door lock switch.

⚠ CAUTION

Whenever the ECU is replaced, ensure that the input and output signal circuits are normal.

Central Door Lock (Driver's Door Lock Actuator Switch) Circuit

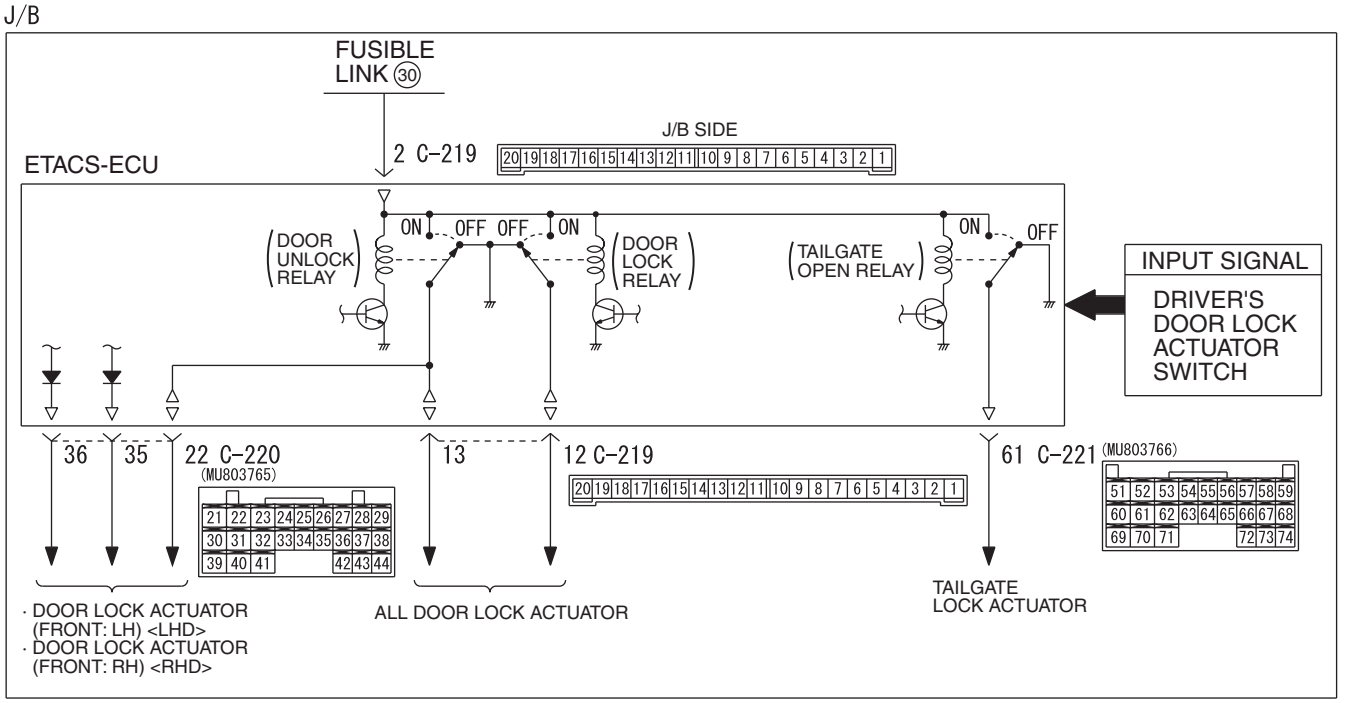

W4X54E214A

COMMENT ON TROUBLE SYMPTOM

If the central door locking system does not work normally only when the driver's door lock switch is operated, the driver's door lock actuator or the ETACS-ECU may be defective.

POSSIBLE CAUSES

- Malfunction of the driver’s door lock acutuator
- Malfunction of the ETACS-ECU
- Damaged harness wires and connectors

Main Index
Group TOC

DIAGNOSIS PROCEDURE

Step 1. ETACS switch data by using the SWS monitor

Check the ETACS-ECU signal, which is related to the driver's door lock operation.

- Driver's door: Unlock → Lock

Item No.	Item name	Normal condition
Item 21	Dr door lock actuator lock SW	from OFF to ON
Item 22	Dr door lock actuator unlock SW	from ON to OFF

OK: Normal condition are displayed for all the items.

Q: Are the check result normal?

YES : Go to Step 2.

NO : Refer to inspection procedure P-13 "The driver's door lock actuator switch signal is not received P.54C-379 <LH drive vehicles> or P.54C-383 <RH drive vehicles>."

Step 2. Retest the system.

Check that the central door locking system works normally by the driver's door lock operation.

Q: Is the check result normal?

YES : The trouble can be an intermittent malfunction (Refer to GROUP 00 – How to Cope with Intermittent Malfunction P.00-5).

NO : Replace the ETACS-ECU.

Main Index
Group TOC

INSPECTION PROCEDURE C-3: The central door locking system does not function by using the passenger's door key cylinder.

⚠ CAUTION

Whenever the ECU is replaced, ensure that the input and output signal circuits are normal.

Central Door Lock (Door Key Switch) Circuit

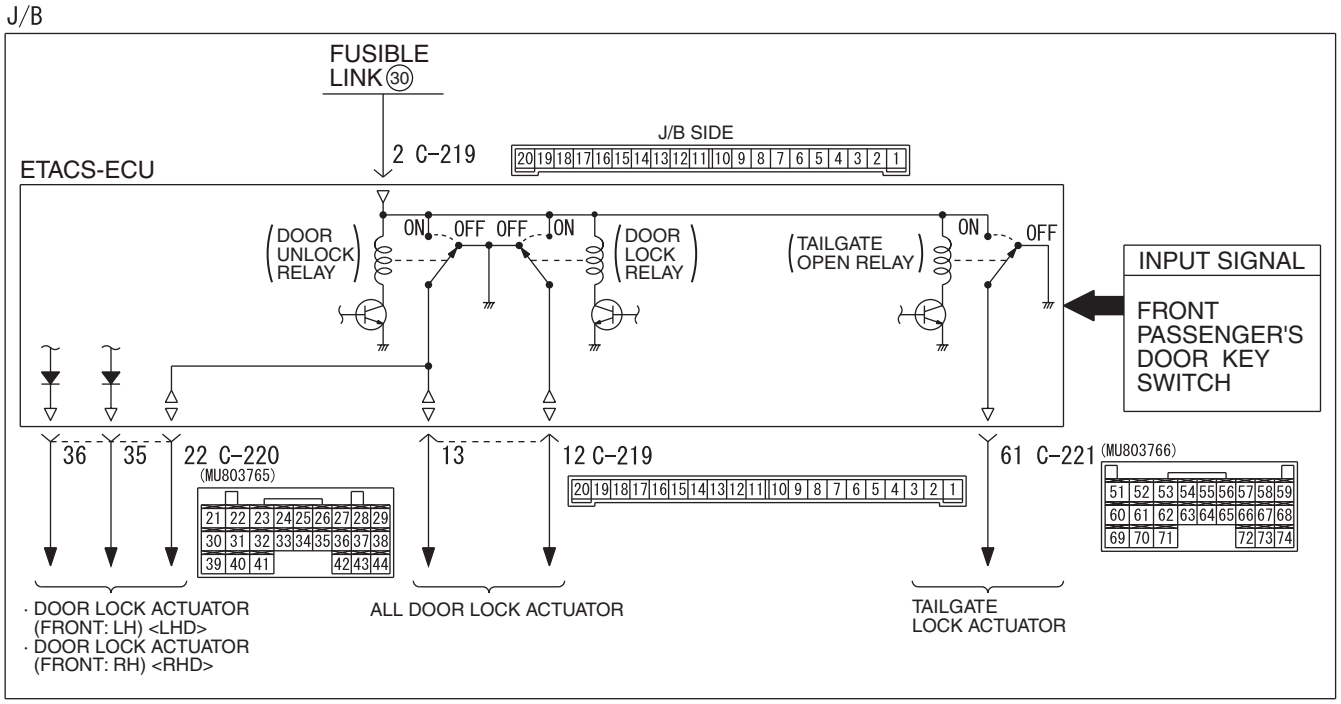

W4X54E150A

COMMENT ON TROUBLE SYMPTOM

If the central door locking system does not work normally only when the front passenger's key cylinder is operated, the front passenger's door key switch or the ETACS-ECU may be defective.

POSSIBLE CAUSES

- Malfunction of the front passenger's door key switch
- Malfunction of the ETACS-ECU
- Damaged harness wires and connectors

Main Index
Group TOC

DIAGNOSIS PROCEDURE

Step 1. ETACS switch data by using the SWS monitor

Check the ETACS-ECU signal, which is related to the front passenger's key cylinder operation.

- passenger's door lock key cylinder: Neutral to lock

Item No.	Item name	Normal condition
Item 26	Center door lock switch	ON (only when operated to lock)
Item 27	Center door unlock switch	OFF

OK: Normal conditions are displayed for all the items.

Q: Are the check result normal?

YES : Go to Step 2.

NO : Refer to inspection procedure P-13 "The driver's door lock actuator switch signal is not received P.54C-379 <LH drive vehicles> or P.54C-383 <RH drive vehicles>."

Step 2. Retest the system.

Check that the central door locking system works normally by the front passenger's key cylinder operation.

Q: Is the check result normal?

YES : The trouble can be an intermittent malfunction (Refer to GROUP 00 – How to Cope with Intermittent Malfunction P.00-5).

NO : Replace the ETACS-ECU.

Main Index
Group TOC

INSPECTION PROCEDURE C-4: The central door locking system does not function by using the tailgate key cylinder.

⚠ CAUTION
Whenever the ECU is replaced, ensure that the input and output signal circuits are normal.

Central Door Lock (Tailgate Key Switch) Circuit

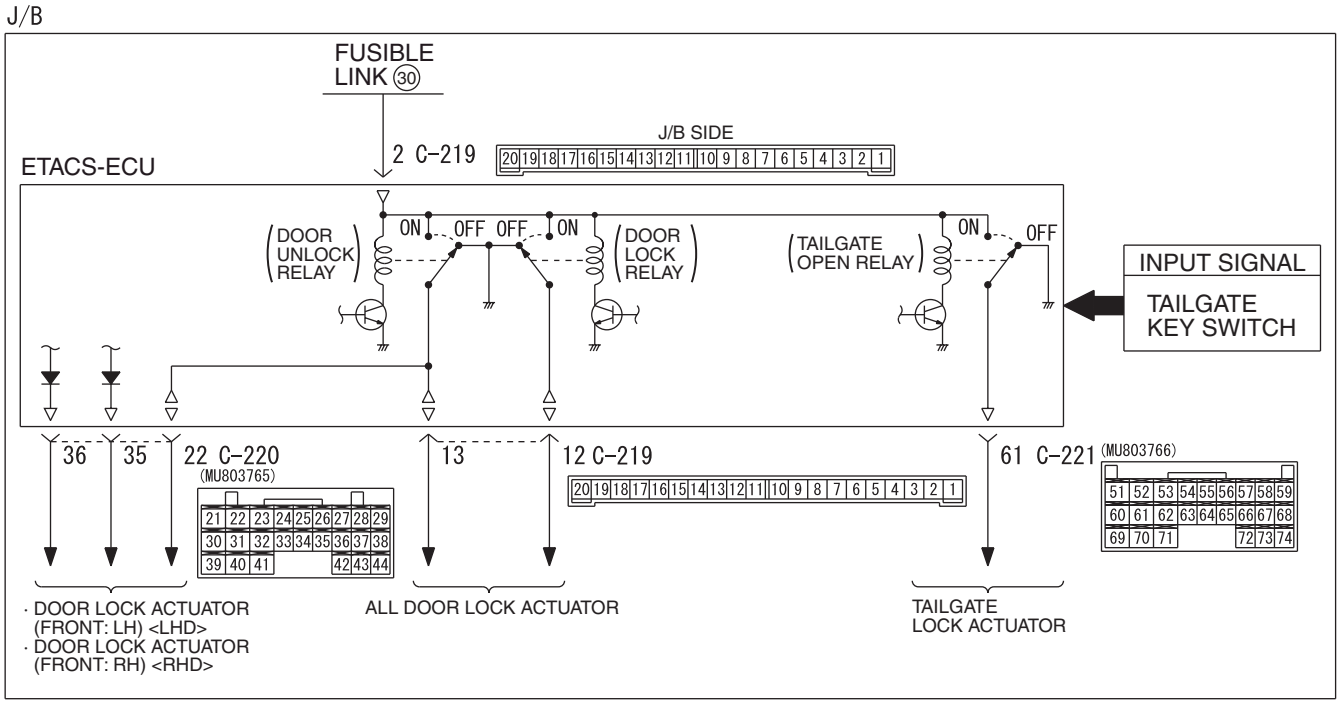

W4X54E149A

COMMENT ON TROUBLE SYMPTOM

If the central door locking system does not work normally only when the tailgate key cylinder is operated, the tailgate key switch or the ETACS-ECU may be defective.

POSSIBLE CAUSES

- Malfunction of the tailgate key switch
- Malfunction of the ETACS-ECU
- Damaged harness wires and connectors

Main Index
Group TOC

DIAGNOSIS PROCEDURE

Step 1. ETACS switch data by using the SWS monitor

Check the ETACS-ECU signal, which is related to the tailgate key cylinder operation.

- Tailgate key switch: Neutral to lock

Item No.	Item name	Normal condition
Item 18	Trunk key unlock switch	OFF
Item 19	Rear gate key lock switch	ON (only when operated to lock)

OK: Normal conditions are displayed for all the items.

Q: Are the check result normal?

YES : Go to Step 2.

NO : Refer to inspection procedure P-15 "The tailgate key switch signal is not received P.54C-393."

Step 2. Retest the system.

Check that the central door locking system works normally by the tailgate key cylinder operation.

Q: Is the check result normal?

YES : The trouble can be an intermittent malfunction (Refer to GROUP 00 – How to Cope with Intermittent Malfunction P.00-5).

NO : Replace the ETACS-ECU.

INSPECTION PROCEDURE C-5: The ignition key reminder function does not work normally. <Vehicles with keyless entry system>

⚠ CAUTION

Whenever the ECU is replaced, ensure that the input and output signal circuits are normal.

COMMENTS ON TROUBLE SYMPTOM

If the key reminder function does not work normally, the input signal circuits below or the ETACS-ECU may be defective.

- Key reminder switch
- Driver's door switch
- Driver’s door lock actuator

POSSIBLE CAUSES

- Malfunction of the key reminder switch
- Malfunction of the driver's door switch
- Malfunction of the driver’s door lock actuator
- Malfunction of the ETACS-ECU
- Damaged harness wires and connectors

DIAGNOSIS PROCEDURE

Step 1. ECU check by using the SWS monitor

Check that the power supply and earth lines to the ETACS-ECU and the SWS communication lines are normal.

- Ignition switch: OFF

ECUS TO BE CHECKED

- ETACS ECU

OK: "OK" is displayed on the "ETACS ECU" menu.

Q: Is the check result normal?

YES : Go to Step 2.

NO : Refer to Inspection Procedure A-3 "Communication with ETACS-ECU is not possible P.54C-51."

Main Index
Group TOC

Step 2. SWS monitor data list.

Check the SWS communication signals, which are related to the key reminder function.

<Selected item> ETACS ECU

- Driver's door: open

Item No.	Item name	Normal condition
Item 32	DR DOOR SW	ON

OK: Normal condition is displayed.

Q: Is the check result normal?

YES : Go to Step 3.

NO : Refer to inspection procedure P-5 "The driver's door switch signal is not received P.54C-346 <LH drive vehicles> or P.54C-348 <RH drive vehicles>."

Step 3. ETACS switch data by using the SWS monitor

Check the ETACS-ECU signal related to the ignition key reminder function.

- Ignition switch: OFF (key inserted)

Item No.	Item name	Normal condition
Item 03	Key reminder switch	OFF

- Driver’s door: Unlock → Lock

Item No.	Item name	Normal condition
Item 21	Dr door lock actuator lock SW	from OFF to ON
Item 22	Dr door lock actuator unlock SW	from ON to OFF

OK: Normal condition are displayed for all the items.

Q: Is the check result normal?

All the signals are received normally. : . Go to Step 4.

The key reminder switch signal is not received. : . Refer to inspection procedure P-10 "The key reminder switch signal is not received P.54C-364."

The driver's door lock actuator switch signal is not received. : . Refer to inspection procedure P-13 "The driver's door lock actuator signal is not received P.54C-379 <LH drive vehicles> or P.54C-383 <RH drive vehicles>."

Step 4. Retest the system.

Q: Does the ignition key reminder function work normally?

YES : The trouble can be an intermittent malfunction (Refer to GROUP 00 – How to Cope with Intermittent Malfunction P.00-5).

NO : Replace the ETACS-ECU.

Main Index
Group TOC

INSPECTION PROCEDURE C-6: A door can not be locked or unlocked by the central door locking system. <LH drive vehicles>

Central Door Lock Circuit <LHD>

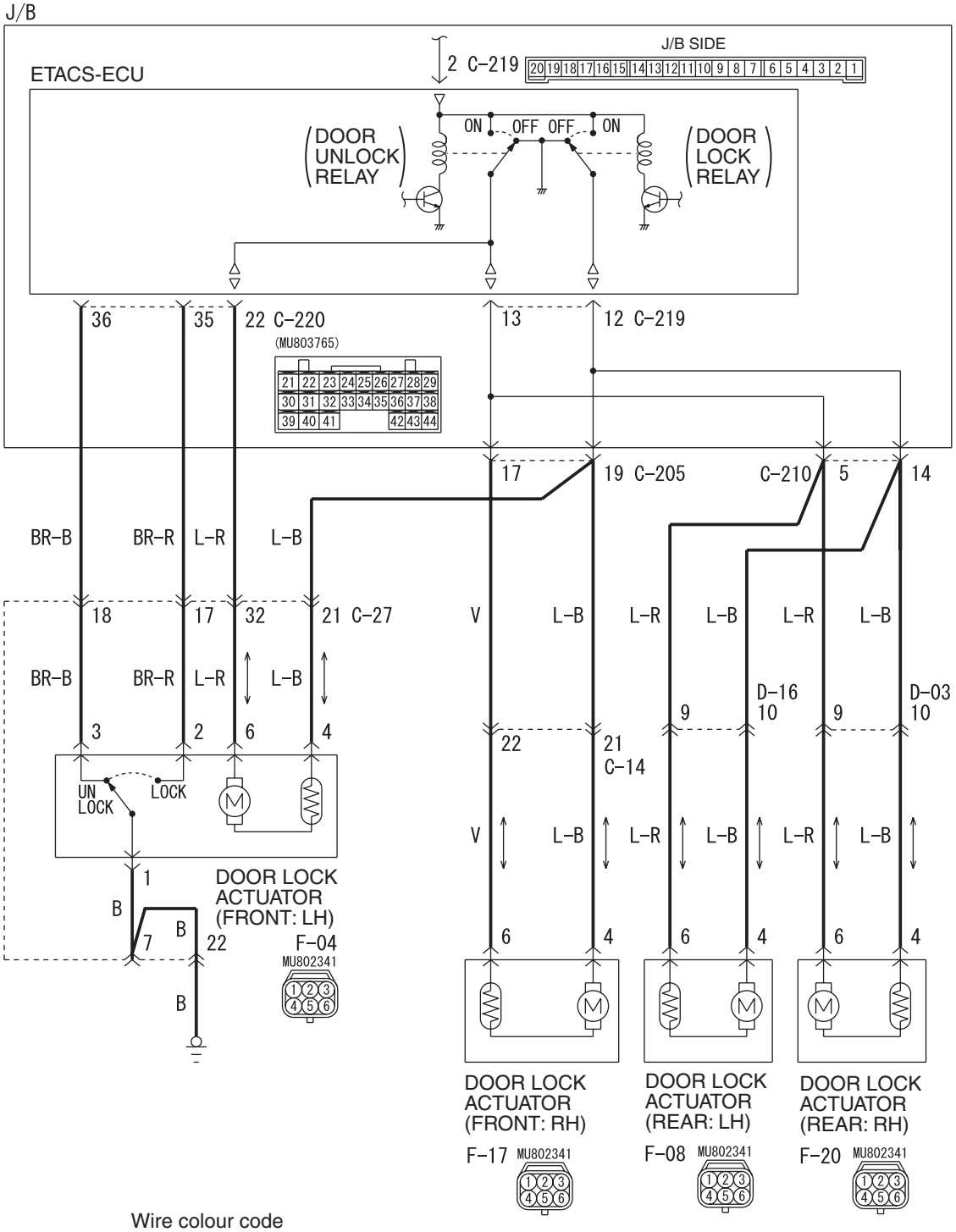

Wire colour code
B : Black LG : Light green G : Green L : Blue W : White Y : Yellow SB : Sky blue
BR : Brown O : Orange GR : Gray R : Red P : Pink V : Violet

W4X54E042A

Main Index
Group TOC

COMMENT ON TROUBLE SYMPTOM

If a door can not be locked or unlocked by the central door locking system, the door lock actuator may be defective.

POSSIBLE CAUSES

- Malfunction of the door lock actuator
- Damaged harness wires and connectors

DIAGNOSIS PROCEDURE

Step 1. Confirm which door lock actuator is defective.

Q: Which door fails to lock correctly?
Driver's door : Go to Step 2.
Front passenger's door : Go to Step 6.
Rear right door : Go to Step 10.
Rear left door : Go to Step 14.

Step 2. Connector check: F-04 door lock actuator (front: LH)

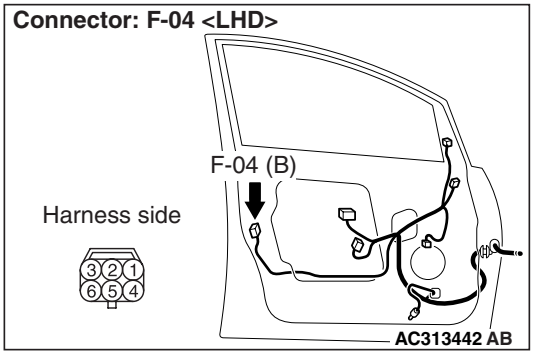

Q: Is the check result normal?
YES : Go to Step 3.
NO : Repair the defective connector.

Step 3. Check the door lock actuator (front: LH).

Check that the door lock actuator (front: LH) works normally. Refer to GROUP 42 – Door P.42-45.

Q: Is the check result normal?
YES : Go to Step 4.
NO : Replace the door lock actuator (front: LH).

Step 4. Connector check: C-219, C-220 ETACS-ECU connector

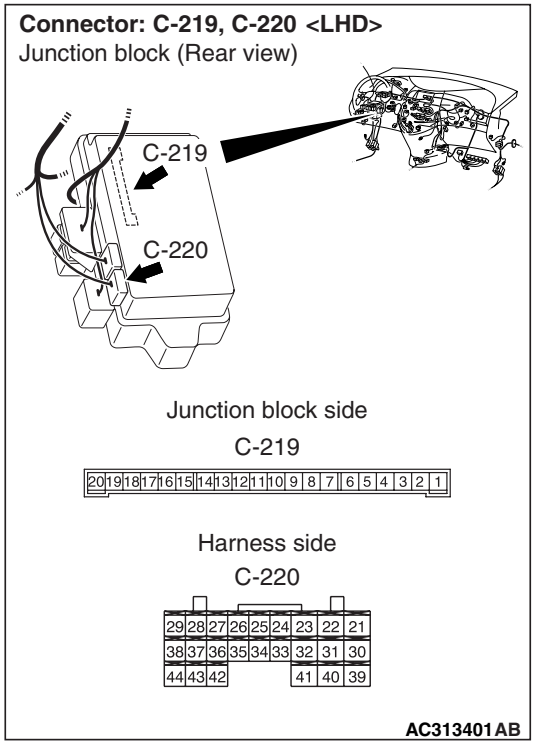

Q: Is the check result normal?
YES : Go to Step 5.
NO : Repair the defective connector.

Step 5. Check the wiring harness from C-219 ETACS-ECU connector terminal No.12 and C-220 ETACS-ECU connector No.22 to F-04 door lock actuator (front: LH) terminal Nos. 4 and 6.

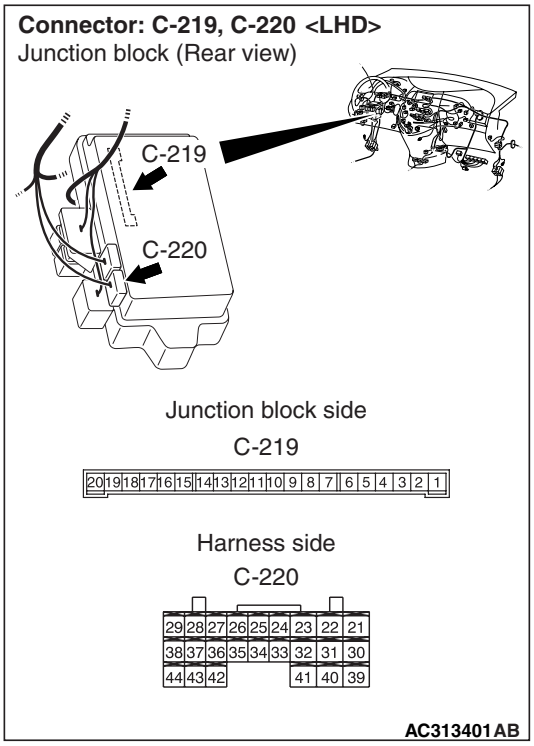

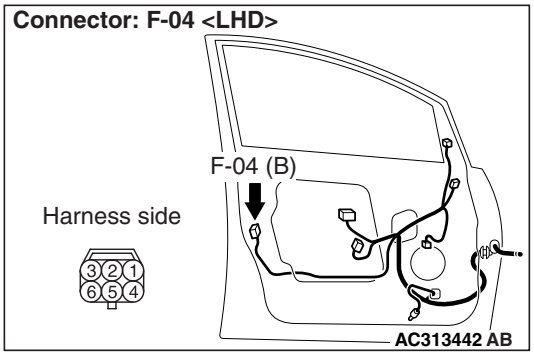

NOTE:

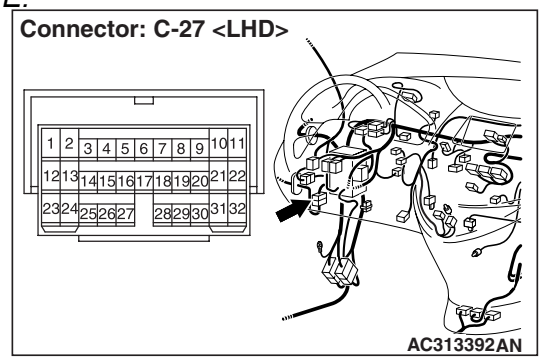

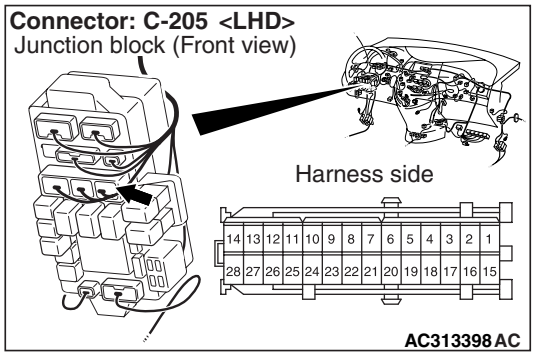

Prior to the wiring harness inspection, check intermediate connector C-27 and junction block connector C-205, and repair if necessary.

- Check the input and output lines for open circuit.

Q: Is the check result normal?

YES : The trouble can be an intermittent malfunction (Refer to GROUP 00 – How to Cope with Intermittent Malfunction P.00-5).

NO : Repair the wiring harness.

Step 6. Connector check: F-17 door lock actuator (front: RH) connector

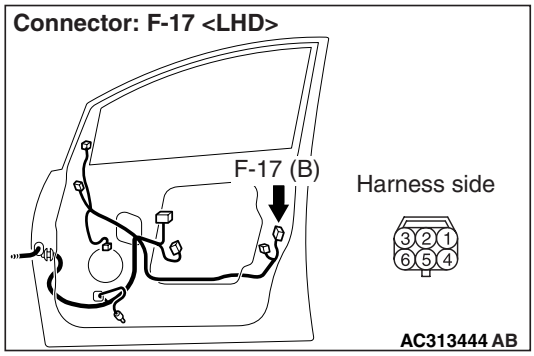

Q: Is the check result normal?

YES : Go to Step 7.

NO : Repair the defective connector.

Step 7. Check the door lock actuator (front: RH).

Check that the door lock actuator (front: RH) works normally. Refer to GROUP 42 – Door P.42-45.

Q: Is the check result normal?

YES : Go to Step 8.

NO : Replace the door lock actuator (front: RH).

Main Index
Group TOC

Step 8. Connector check: C-219 ETACS-ECU connector

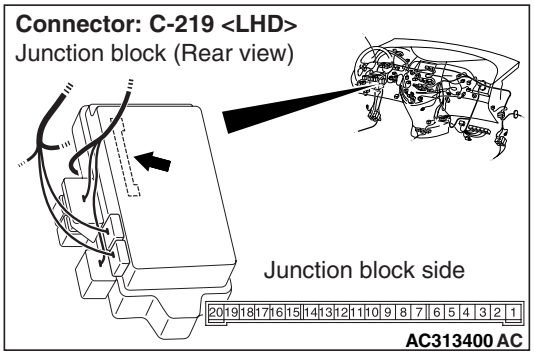

Q: Is the check result normal?
YES : Go to Step 9.
NO : Repair the defective connector.

Step 9. Check the wiring harness from C-219 ETACS-ECU connector terminal Nos. 12 and 13 to F-17 door lock actuator (front: RH) connector terminal Nos. 4 and 6.

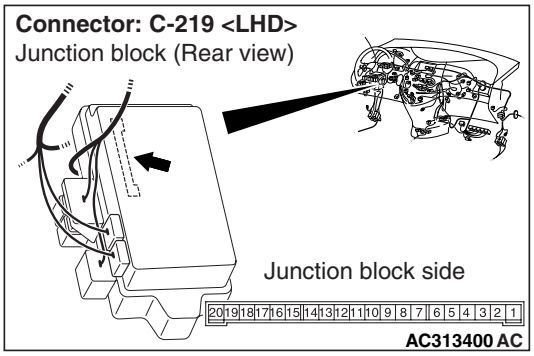

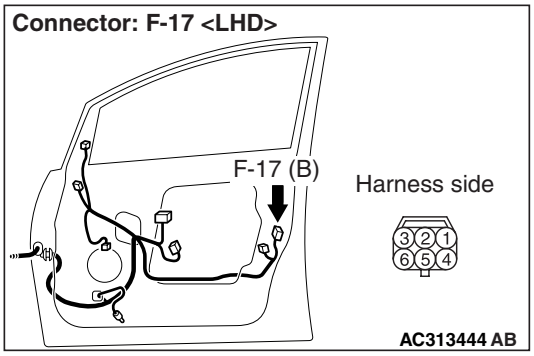

NOTE:

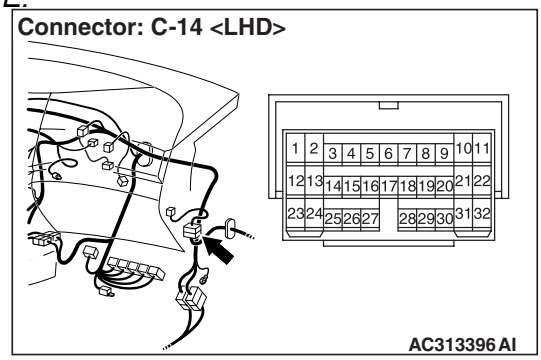

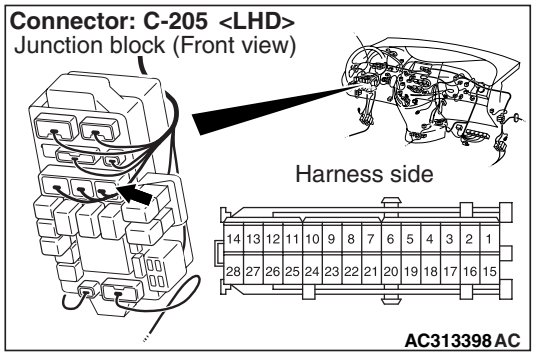

Prior to the wiring harness inspection, check intermediate connector C-14 and junction block connector C-205, and repair if necessary.

- Check the input and output lines for open circuit.

Q: Is the check result normal?
YES : The trouble can be an intermittent malfunction (Refer to GROUP 00 – How to Cope with Intermittent Malfunction P.00-5).
NO : Repair the wiring harness.

Step 10. Connector check: F-20 door lock actuator (rear: RH) connector

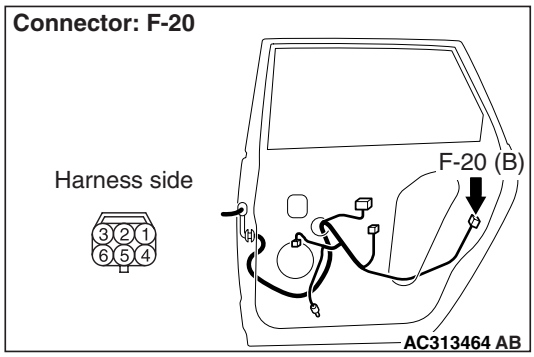

Q: Is the check result normal?
YES : Go to Step 11.
NO : Repair the defective connector.

Step 11. Check the door lock actuator (rear: RH).
Check that the door lock actuator (rear: RH) is in good condition. Refer to GROUP 42 – Door P.42-45.

Q: Is the check result normal?
YES : Go to Step 12.
NO : Replace the door lock actuator (rear: RH).

Step 12. Connector check: C-219 ETACS-ECU connector

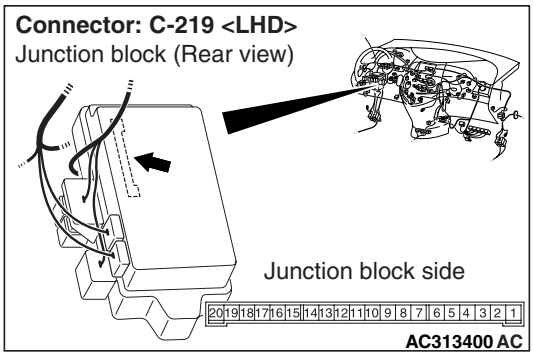

Q: Is the check result normal?
YES : Go to Step 13.
NO : Repair the defective connector.

Step 13. Check the wiring harness from C-219 ETACS-ECU connector terminal Nos. 12 and 13 to F-20 door lock actuator (rear: RH) connector terminal Nos. 4 and 6.

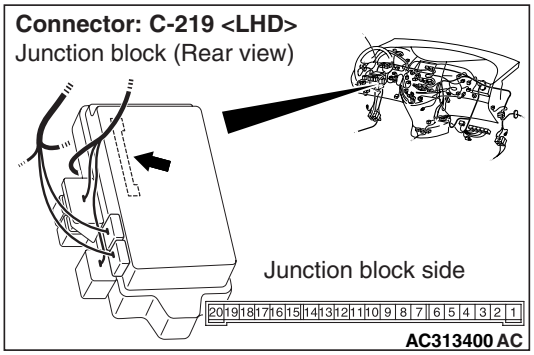

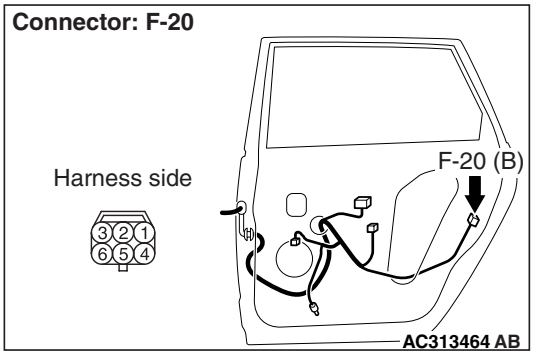

NOTE:

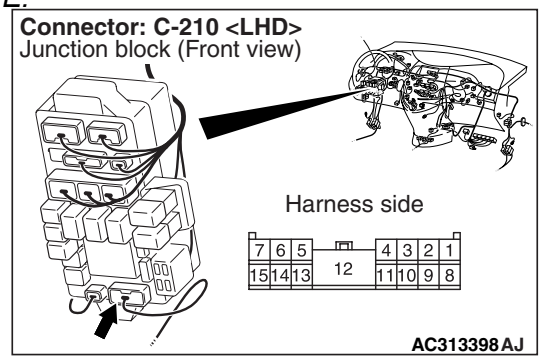

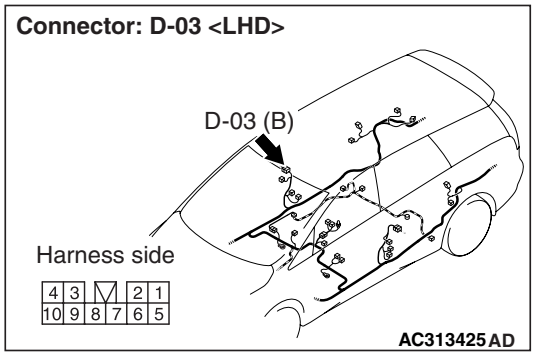

Prior to the wiring harness inspection, check intermediate connector D-03 and junction block connector C-210, and repair if necessary.

- Check the input and output lines for open circuit.

Q: Is the check result normal?
YES : The trouble can be an intermittent malfunction (Refer to GROUP 00 – How to Cope with Intermittent Malfunction P.00-5).
NO : Repair the wiring harness.

Step 14. Connector check: F-08 door lock actuator (rear: LH) connector

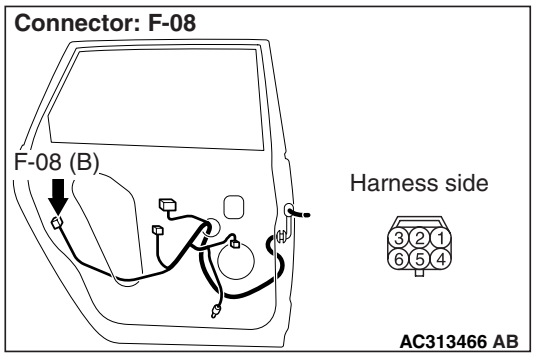

Q: Is the check result normal?
YES : Go to Step 15.
NO : Repair the defective connector.

Main Index
Group TOC

Step 15. Check the door lock actuator (rear: LH).
Check that the door lock actuator (rear: LH) is in good condition. Refer to GROUP 42 – Door P.42-45.

Q: Is the check result normal?
YES : Go to Step 16.
NO : Replace the door lock actuator (rear: LH).

Step 16. Connector check: C-219 ETACS-ECU connector

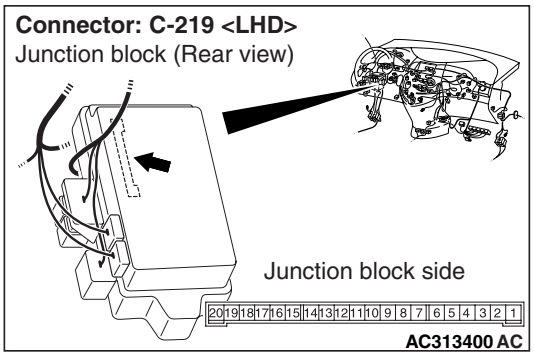

Q: Is the check result normal?
YES : Go to Step 17.
NO : Repair the defective connector.

Step 17. Check the wiring harness from C-219 ETACS-ECU connector terminal Nos. 12 and 13 to F-08 door lock actuator (rear: LH) connector terminal Nos. 4 and 6.

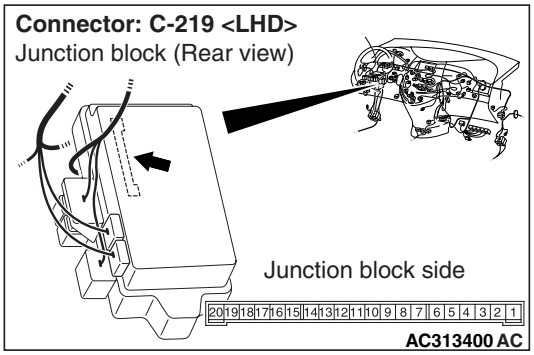

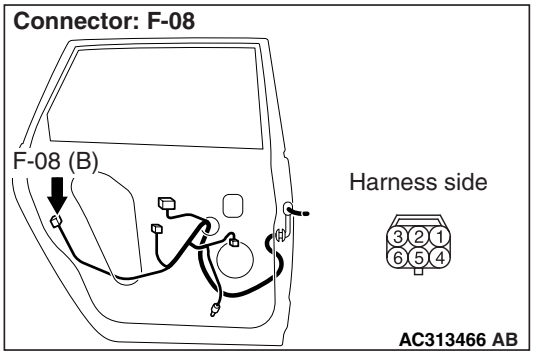

NOTE:

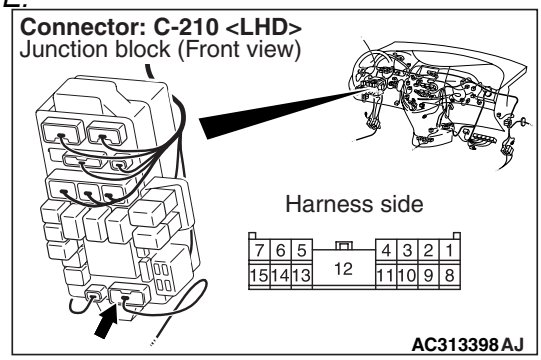

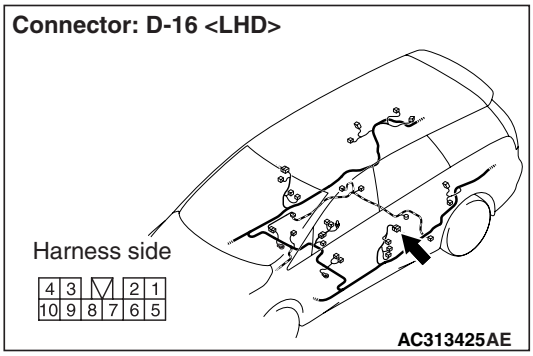

Prior to the wiring harness inspection, check intermediate connector D-16 and junction block connector C-210, and repair if necessary.

- Check the input and output lines for open circuit.

Q: Is the check result normal?
YES : The trouble can be an intermittent malfunction (Refer to GROUP 00 – How to Cope with Intermittent Malfunction P.00-5).
NO : Repair the wiring harness.

Main Index
Group TOC

INSPECTION PROCEDURE C-6: A door can not be locked or unlocked by the central door locking system. <RH drive vehicles>

Central Door Lock Circuit <RHD>

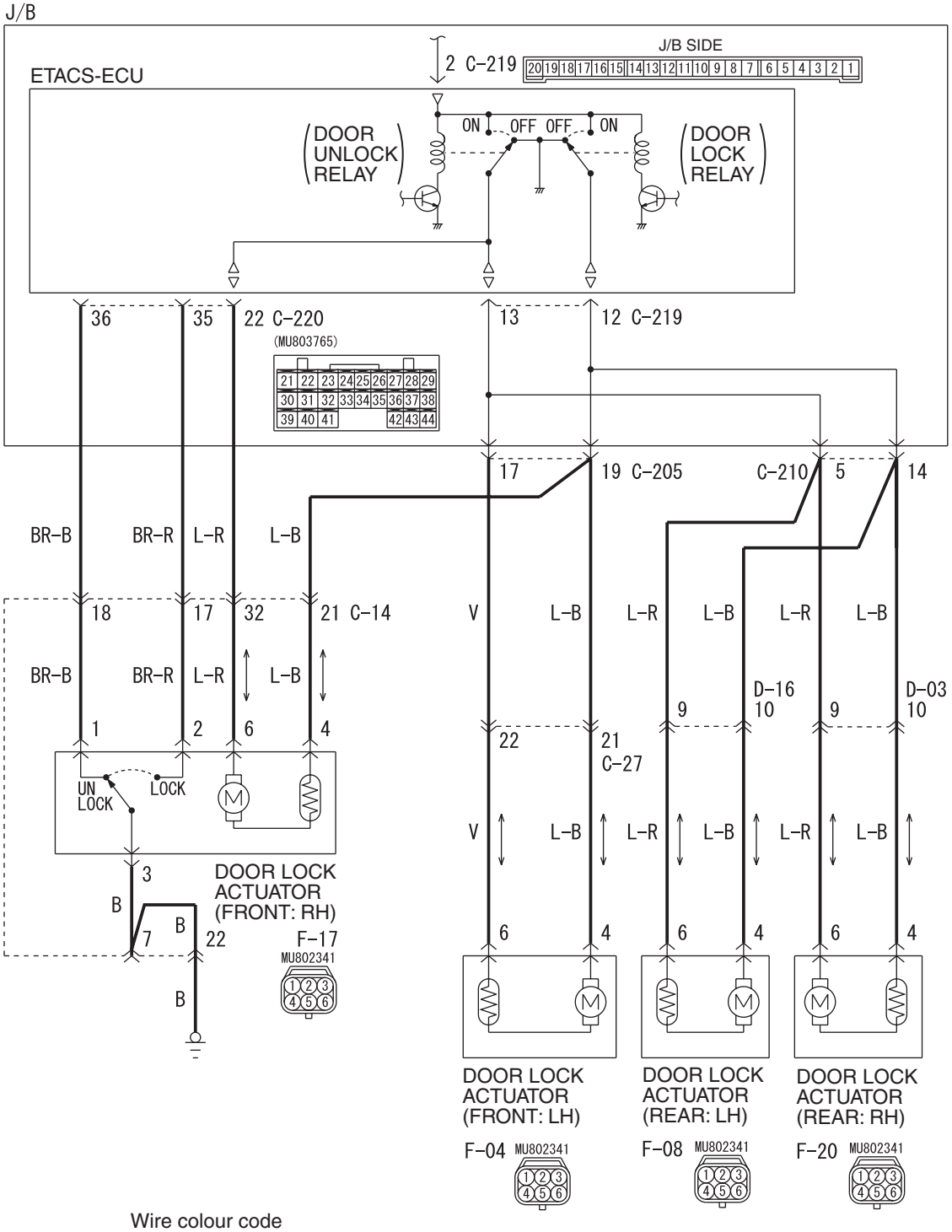

Wire colour code
B : Black LG : Light green G : Green L : Blue W : White Y : Yellow SB : Sky blue
BR : Brown O : Orange GR : Gray R : Red P : Pink V : Violet

W4X54E043A

Main Index
Group TOC

COMMENT ON TROUBLE SYMPTOM

If a door can not be locked or unlocked by the central door locking system, the door lock actuator may be defective.

POSSIBLE CAUSES

- Malfunction of the door lock actuator
- Damaged harness wires and connectors

DIAGNOSIS PROCEDURE

Step 1. Confirm which door lock actuator is defective.

Q: Which door fails to lock correctly?
Driver's door : Go to Step 2.
Front passenger's door : Go to Step 6.
Rear right door : Go to Step 10.
Rear left door : Go to Step 14.

Step 2. Connector check: F-17 door lock actuator (front: RH) connector

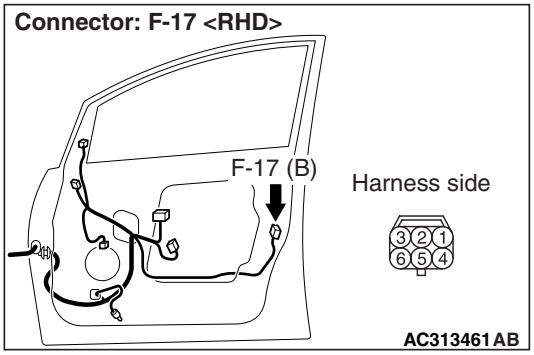

Q: Is the check result normal?
YES : Go to Step 3.
NO : Repair the defective connector.

Step 3. Check the door lock actuator (front: RH)

Check that the door lock actuator (front: RH) works normally. Refer to GROUP 42 – Door P.42-45.

Q: Is the check result normal?
YES : Go to Step 4.
NO : Replace the door lock actuator (front: RH).

Step 4. Connector check: C-219, C-220 ETACS-ECU connector

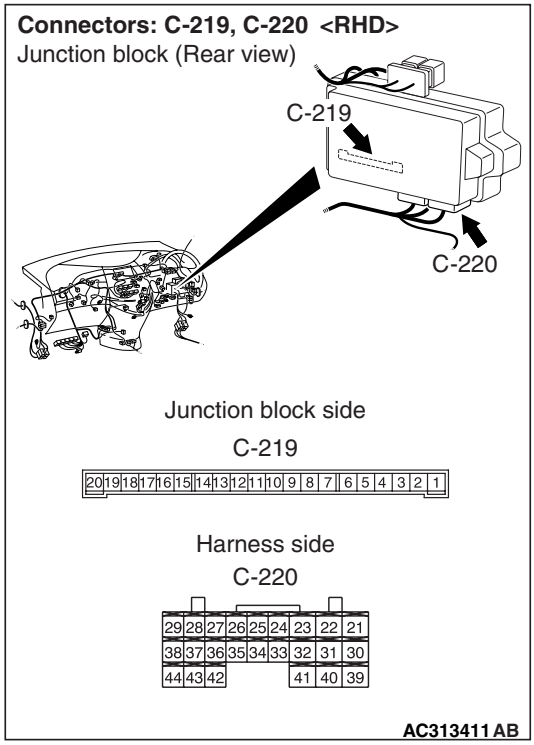

Q: Is the check result normal?
YES : Go to Step 5.
NO : Repair the defective connector.

Step 5. Check the wiring harness from C-219 ETACS-ECU connector terminal No.12 and C-220 ETACS-ECU connector No.22 to F-17 door lock actuator (front: RH) connector terminal Nos. 4 and 6.

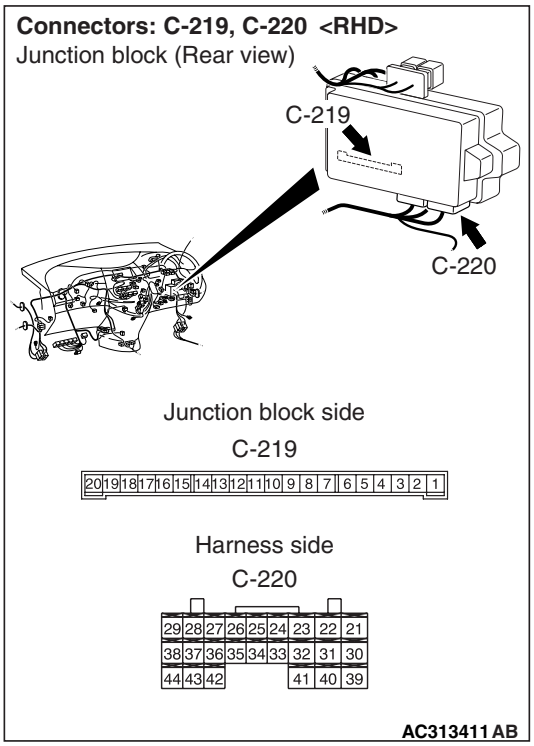

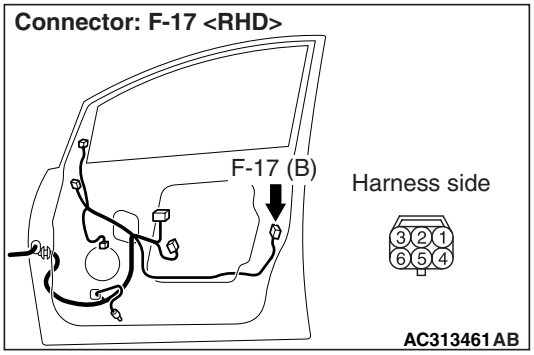

NOTE:

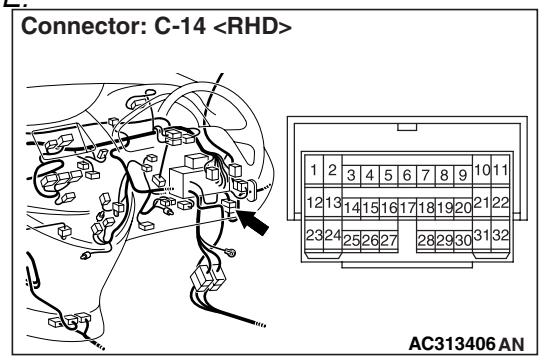

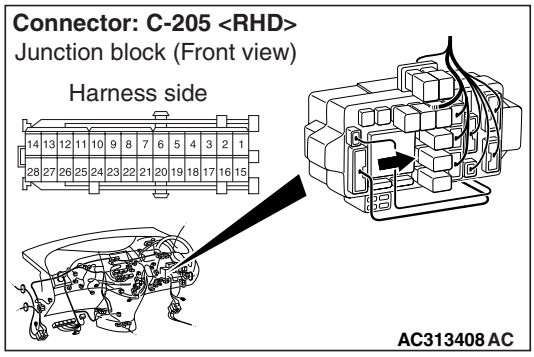

Prior to the wiring harness inspection, check intermediate connector C-14 and junction block connector C-205, and repair if necessary.

- Check the input and output lines for open circuit.

Q: Is the check result normal?

YES : The trouble can be an intermittent malfunction (Refer to GROUP 00 – How to Cope with Intermittent Malfunction P.00-5).

NO : Repair the wiring harness.

Step 6. Connector check: F-04 door lock actuator (front: LH) connector

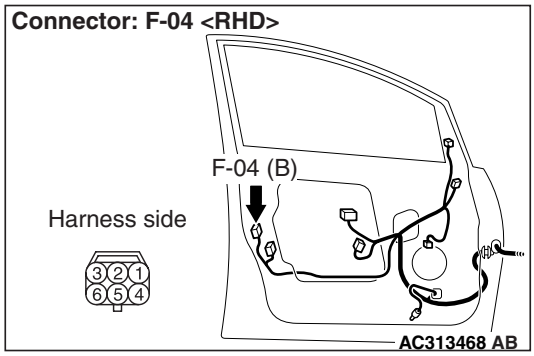

Q: Is the check result normal?

YES : Go to Step 7.

NO : Repair the defective connector.

Step 7. Check the door lock actuator (front: LH).

Check that the door lock actuator (front: LH) works normally. Refer to GROUP 42 – Door P.42-45.

Q: Is the check result normal?

YES : Go to Step 8.

NO : Replace the door lock actuator (front: LH).

Main Index
Group TOC

Step 8. Connector check: C-219 ETACS-ECU connector

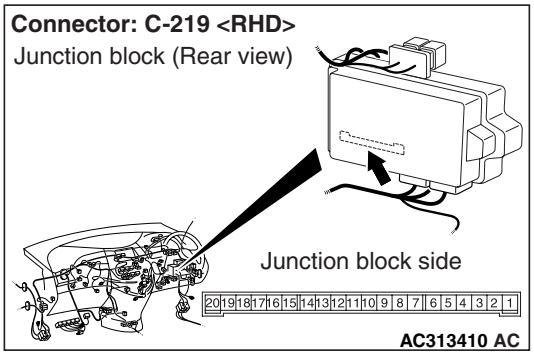

Q: Is the check result normal?
YES : Go to Step 9.
NO : Repair the defective connector.

Step 9. Check the wiring harness from C-219 ETACS-ECU connector terminal Nos. 12 and 13 to F-04 door lock actuator (front: LH) connector terminal Nos. 4 and 6.

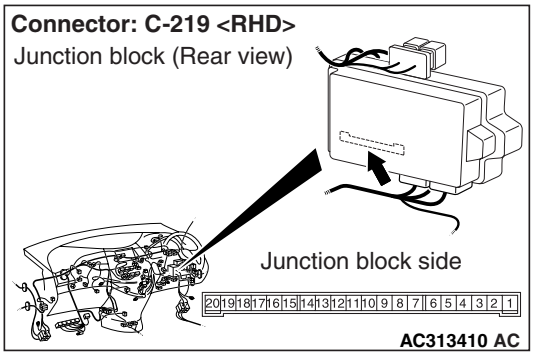

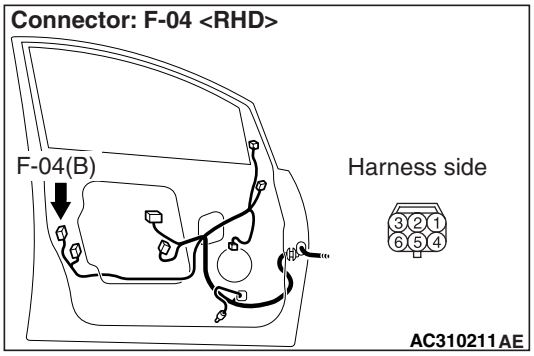

NOTE:

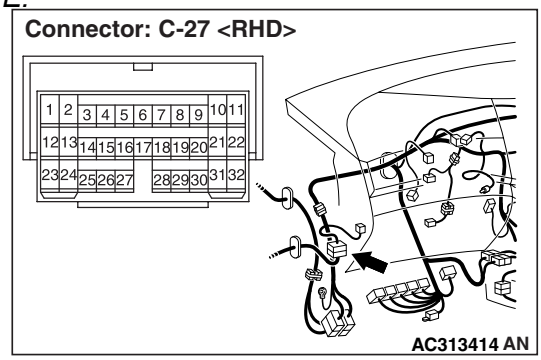

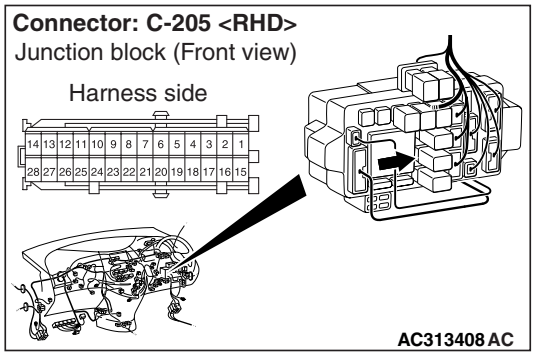

Prior to the wiring harness inspection, check intermediate connector C-27 and junction block connector C-205, and repair if necessary.

- Check the input and output lines for open circuit.

Q: Is the check result normal?
YES : The trouble can be an intermittent malfunction (Refer to GROUP 00 – How to Cope with Intermittent Malfunction P.00-5).
NO : Repair the wiring harness.

Step 10. Connector check: F-20 door lock actuator (rear: RH) connector

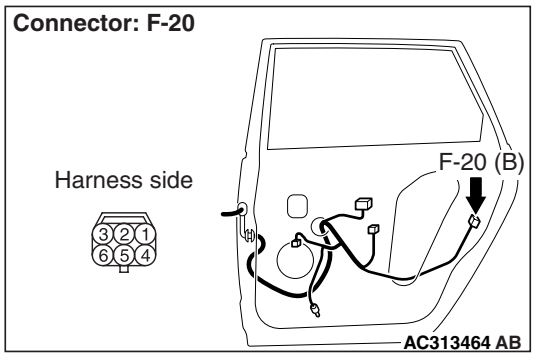

Q: Is the check result normal?
YES : Go to Step 11.
NO : Repair the defective connector.

Main Index
Group TOC

Step 11. Check the door lock actuator (rear: RH).
Check that the door lock actuator (rear: RH) is in good condition. Refer to GROUP 42 – Door P.42-45.

Q: Is the check result normal?
YES : Go to Step 12.
NO : Replace the door lock actuator (rear: RH).

Step 12. Connector check: C-219 ETACS-ECU connector

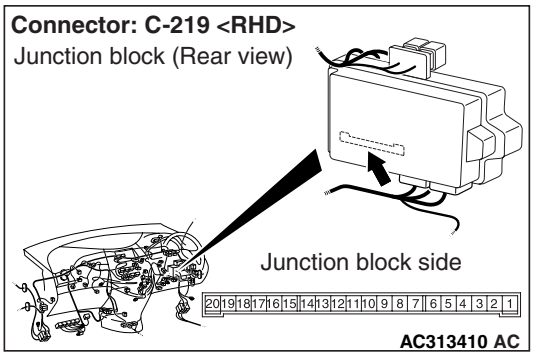

Q: Is the check result normal?
YES : Go to Step 13.
NO : Repair the defective connector.

Step 13. Check the wiring harness from C-219 ETACS-ECU connector terminal Nos. 12 and 13 to F-20 door lock actuator (rear: RH) connector terminal Nos. 4 and 6.

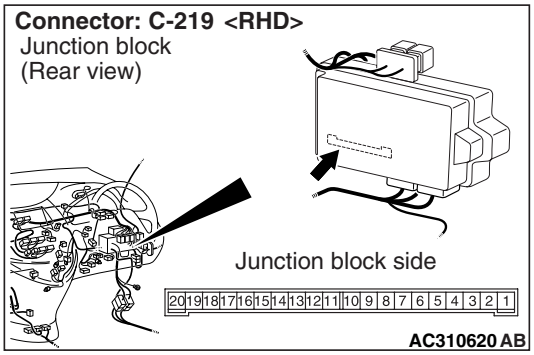

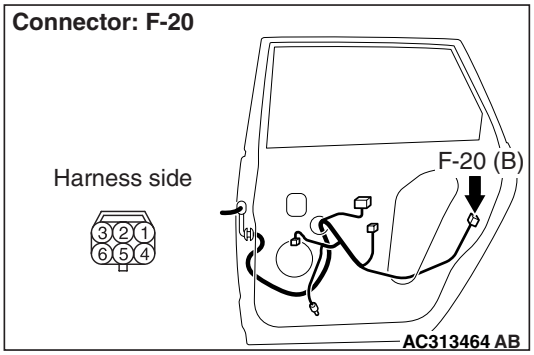

NOTE:

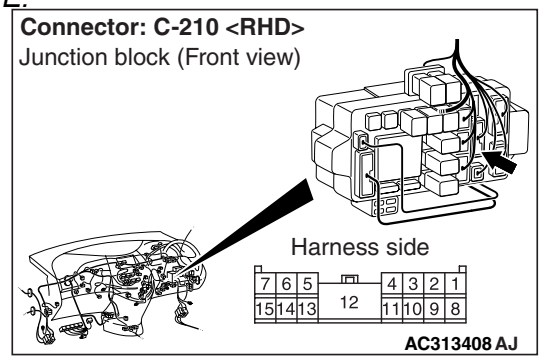

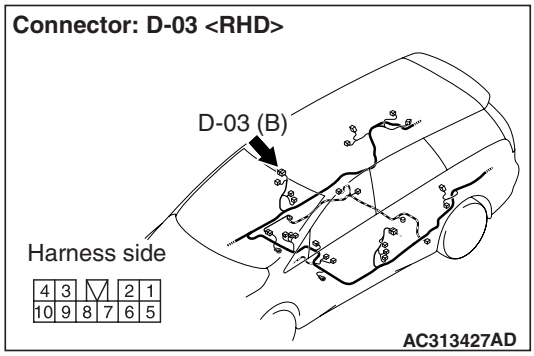

Prior to the wiring harness inspection, check intermediate connector D-03 and junction block connector C-210, and repair if necessary.

- Check the input and output lines for open circuit.

Q: Is the check result normal?
YES : The trouble can be an intermittent malfunction (Refer to GROUP 00 – How to Cope with Intermittent Malfunction P.00-5).
NO : Repair the wiring harness.

Step 14. Connector check: F-08 door lock actuator (rear: LH) connector

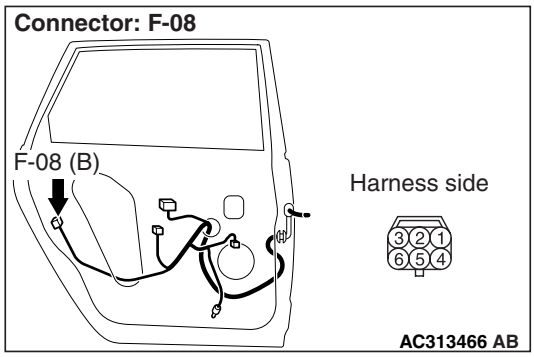

Q: Is the check result normal?
YES : Go to Step 15.
NO : Repair the defective connector.

Main Index
Group TOC

Step 15. Check the door lock actuator (rear: LH).
Check that the door lock actuator (rear: LH) is in good condition. Refer to GROUP 42 – Door P.42-45.

Q: Is the check result normal?
YES : Go to Step 16.
NO : Replace the door lock actuator (rear: LH).

Step 16. Connector check: C-219 ETACS-ECU connector

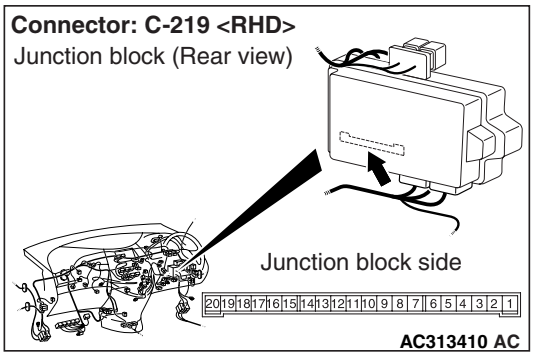

Q: Is the check result normal?
YES : Go to Step 17.
NO : Repair the defective connector.

Step 17. Check the wiring harness from C-219 ETACS-ECU connector terminal Nos. 12 and 13 to F-08 door lock actuator (rear: LH) connector terminal Nos. 4 and 6.

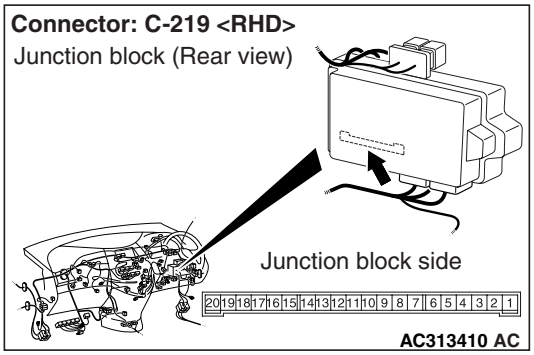

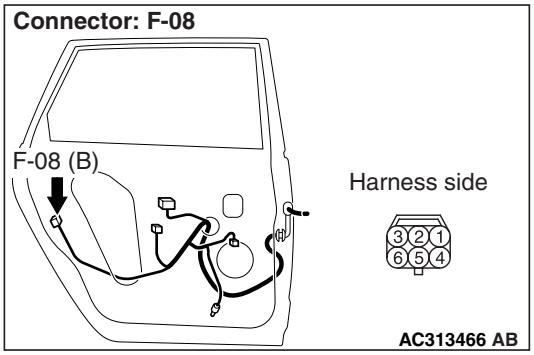

NOTE:

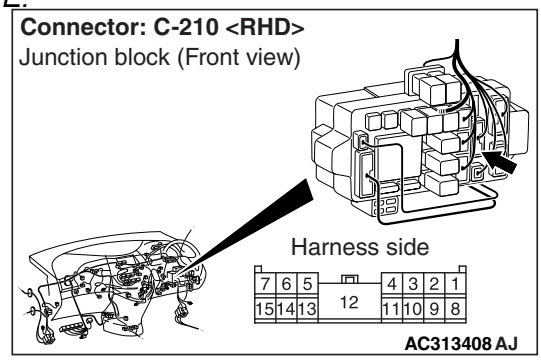

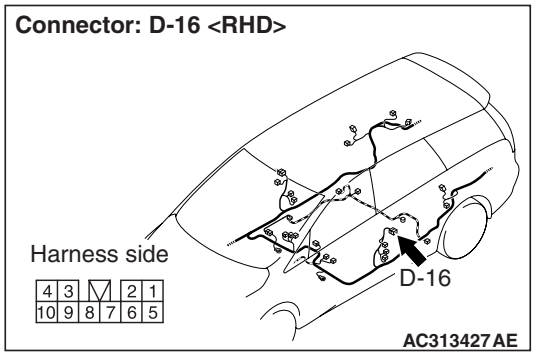

Prior to the wiring harness inspection, check intermediate connectors D-16 and junction block connector C-210, and repair if necessary.

- Check the input and output lines for open circuit.

Q: Is the check result normal?
YES : The trouble can be an intermittent malfunction (Refer to GROUP 00 – How to Cope with Intermittent Malfunction P.00-5).
NO : Repair the wiring harness.

Main Index
Group TOC

INSPECTION PROCEDURE C-7: The tailgate cannot be opened or closed.

Tailgate Open Circuit

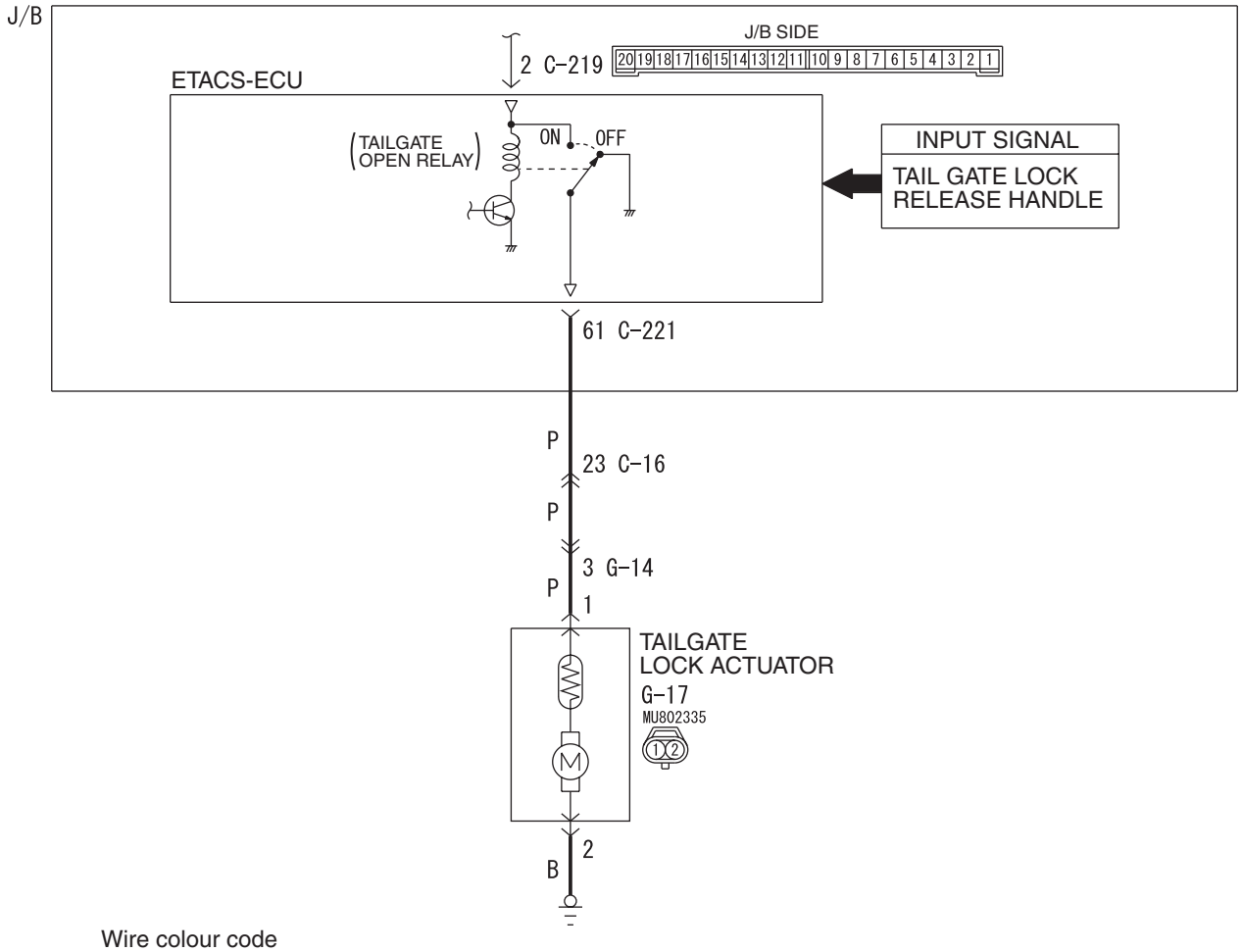

Wire colour code
B : Black LG : Light green G : Green L : Blue W : White Y : Yellow SB : Sky blue
BR : Brown O : Orange GR : Gray R : Red P : Pink V : Violet

W4X54E148A

COMMENT ON TROUBLE SYMPTOM

If the tailgate can not be locked or unlocked by the central door locking system, the tailgate lock actuator or the ETACS-ECU may be defective.

POSSIBLE CAUSES

- Malfunction of the tailgate lock actuator
- Malfunction of the ETACS-ECU
- Damaged harness wires and connectors

DIAGNOSIS PROCEDURE

Step 1. Check that the central door locking system and the keyless entry system operate.

Check that the doors (excluding the tailgate) are locked and unlocked normally when the central door locking and keyless entry systems are operated.

Q: Is the check result normal?

YES : Go to Step 2

NO : <If the central door lock does not work normally> Refer to Inspection Procedure C-1 "Central door locking system does not work P.54C-81." <If the keyless entry system does not work normally> Refer to Inspection Procedure E-1 "Keyless entry system does not work P.54C-142."

Main Index
Group TOC

Step 2. SWS monitor data list

Check the SWS communication input signal, which are related to the tailgate opening and closing.

<Selected item> ETACS ECU

- Ignition switch: from OFF to ON

Item No.	Item name	Normal condition
Item 30	IG SW(IG1)	from OFF to ON

OK: Normal condition is displayed.

Q: Is the check result normal?

YES : Go to Step 3.

NO : Refer to Inspection Procedure P-2 "The ignition switch (IG1) signal is not received P.54C-335."

Step 3. ETACS switch data by using the SWS monitor

Check the ETACS-ECU signal related to the tailgate opening and closing.

- Tailgate lock release handle: from OFF to ON

Item No.	Item name	Normal condition
Item 30	Gate opener switch	OFF to ON (only when switch is operated)

OK: Normal condition is displayed.

Q: Is the check result normal?

YES : Go to Step 4.

NO : Replace the ETACS-ECU.

Step 4. Connector check: G-17 tailgate lock actuator connector

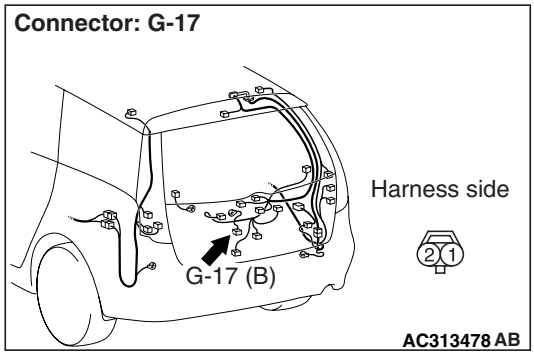

Q: Is the check result normal?

YES : Go to Step 5.

NO : Repair the defective connector.

Step 5. Check the tailgate lock actuator.

Check that the tailgate lock actuator is in good condition. Refer to GROUP 42 – Tailgate P.42-60.

Q: Is the check result normal?

YES : Go to Step 6.

NO : Replace the tailgate lock actuator.

Step 6. Connector check: C-221 ETACS-ECU connector

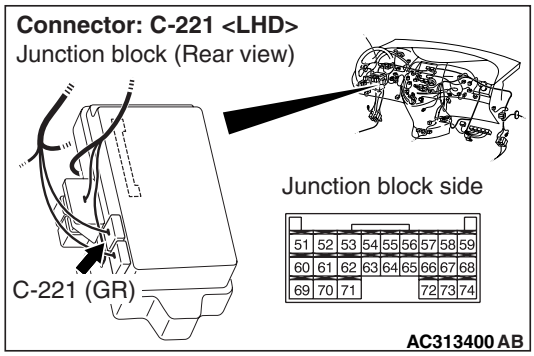

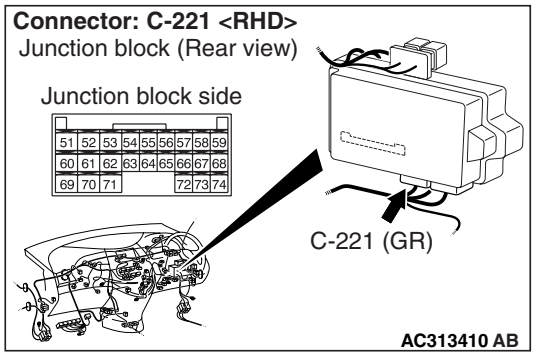

Q: Is the check result normal?

YES : Go to Step 7.

NO : Repair the defective connector.

Step 7. Check the wiring harness from C-221 ETACS-ECU connector terminal No.61 to G-17 tailgate lock actuator connector terminal No.1.

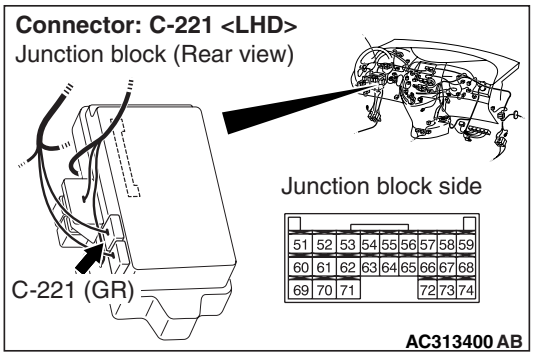

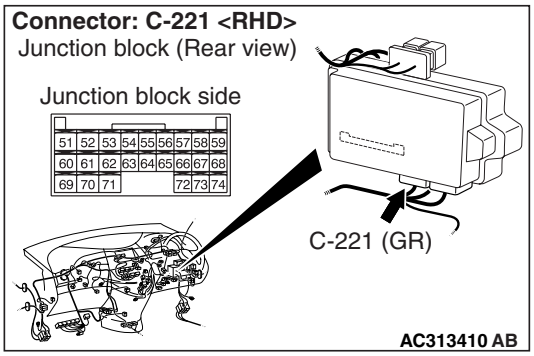

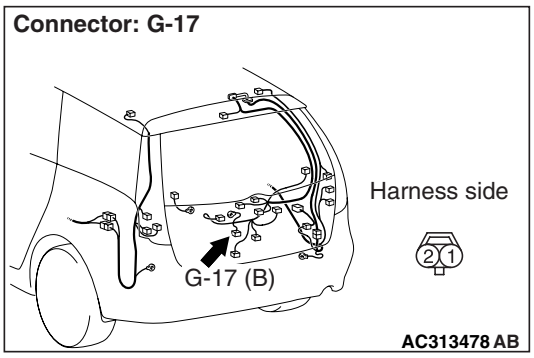

NOTE:

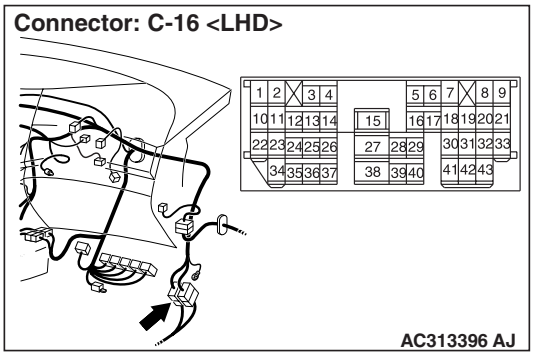

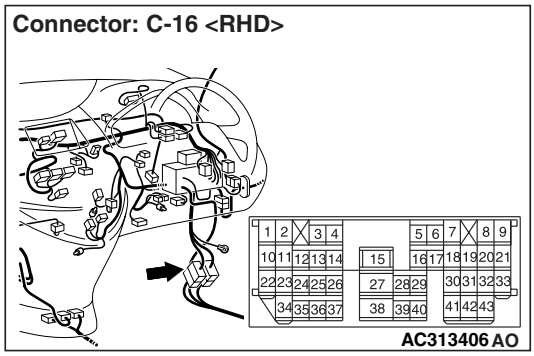

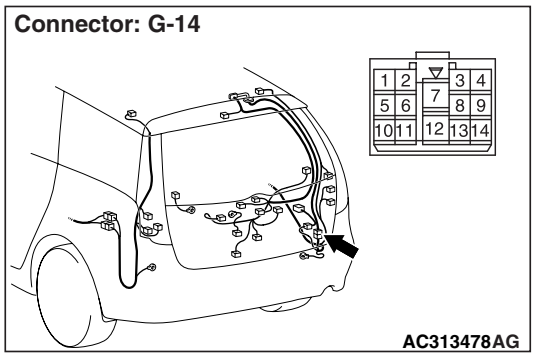

Prior to the wiring harness inspection, check intermediate connector C-16 and G-14, and repair if necessary.

- Check the input and output lines for open circuit.

Q: Is the check result normal?
YES : Go to Step 8.
NO : Repair the wiring harness.

Step 8. Retest the system.
Check that the tailgate lock works normally.

Q: Is the check result normal?
YES : The trouble can be an intermittent malfunction (Refer to GROUP 00 – How to Cope with Intermittent Malfunction P.00-5).
NO : Replace the ETACS-ECU.

Main Index
Group TOC

POWER WINDOW

INSPECTION PROCEDURE D-1: Power windows do not work at all.

⚠ CAUTION

Whenever the ECU is replaced, ensure that the input and output signal circuits are normal.

Power Window Relay Circuit

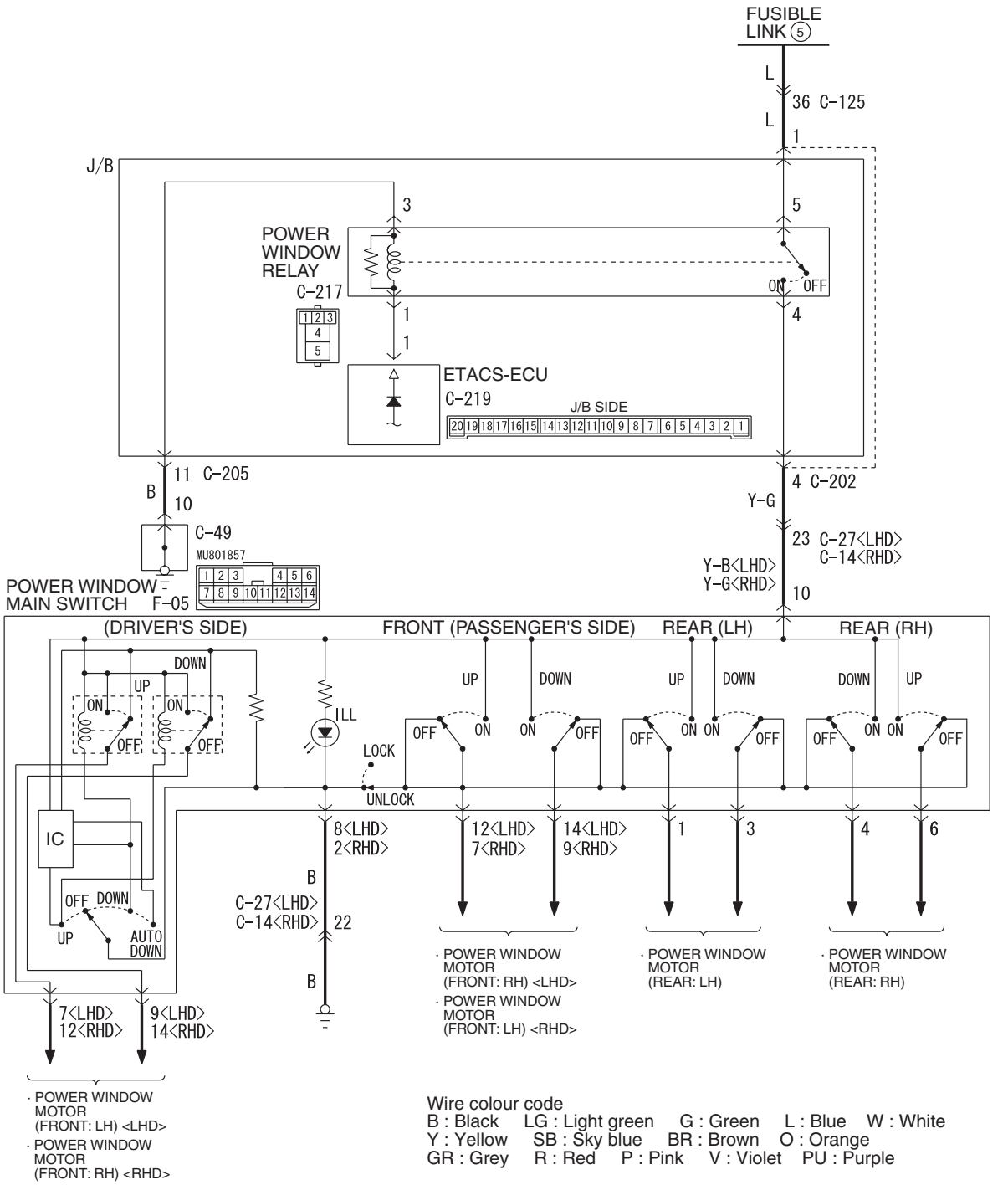

Main Index
Group TOC

COMMENTS ON TROUBLE SYMPTOM

If the power windows do not work at all, the power window relay, the power window main switch or the ETACS-ECU may be defective.

POSSIBLE CAUSES

- Malfunction of the power window relay
- Malfunction of the power window main switch
- Malfunction of the ETACS-ECU
- Damaged harness wires and connectors

DIAGNOSIS PROCEDURE

Step 1. ECU check by using the SWS monitor

Check that the power supply and earth lines to the ETACS-ECU and the SWS communication lines are normal.

- Turn the ignition switch to the ON position.

ECUS TO BE CHECKED

- ETACS ECU

OK: "OK" are displayed for all the items

Q: Is the check result normal?

YES : Go to Step 2.

NO : Refer to Inspection Procedure A-3 "Communication with ETACS-ECU is not possible P.54C-51."

Step 2. SWS monitor data list

<Selected item> ETACS

- Ignition switch: ON

Item No.	Item name	Normal condition
Item 30	Ignition SW(IG1)	ON

OK: Normal condition is displayed.

Q: Is the check result normal?

YES : Go to Step 3.

NO : Refer to inspection procedure P-2 "The ignition switch (IG1) signal is not received P.54C-335."

Step 3. Connector check: C-217 power window relay connector

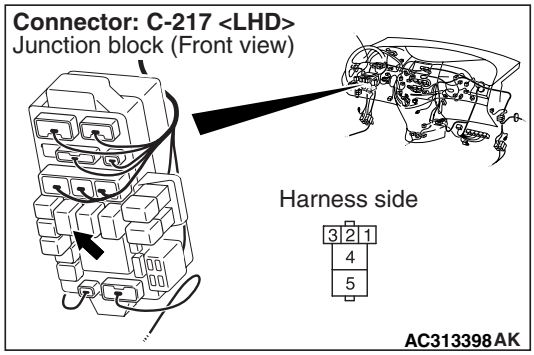

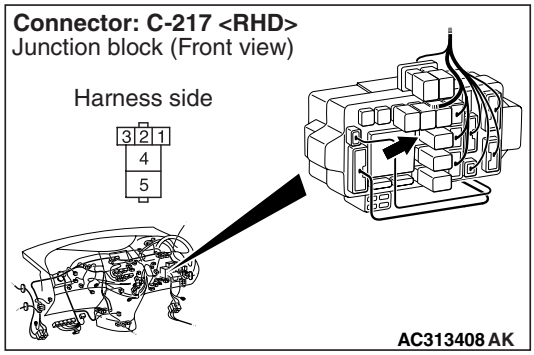

Q: Is the check result normal?

YES : Go to Step 4.

NO : Repair the connector.

Step 4. Check the power window relay.

Refer to GROUP 42 – Door – On-vehicle Service P.42-32.

Q: Is the check result normal?

YES : Go to Step 5.

NO : Replace the power window relay.

Main Index
Group TOC

Step 5. Connector check: F-05 power window main switch connector

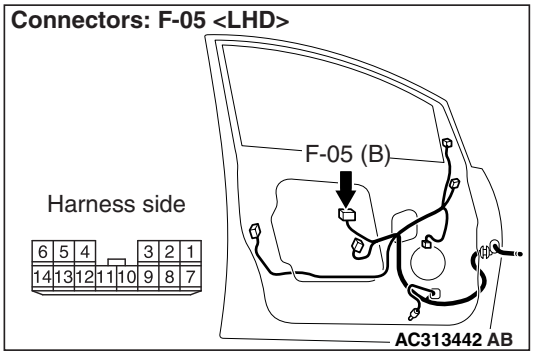

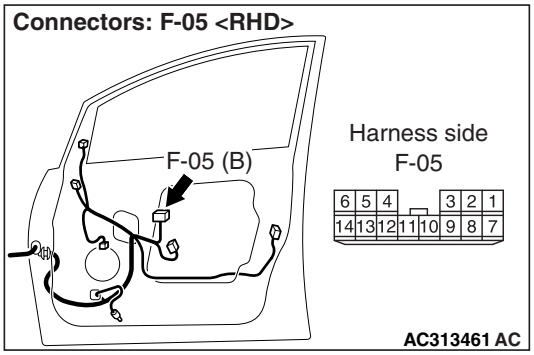

Q: Is the check result normal?
YES : Go to Step 6.
NO : Repair the connector.

Step 6. Check the power window main switch

Check that the power window main switch works normally. Refer to GROUP 42 – Door P.42-39.

Q: Is the check result normal?
YES : Go to Step 7.
NO : Replace the power window main switch.

Step 7. Voltage measurement at the F-05 power window main switch connector.

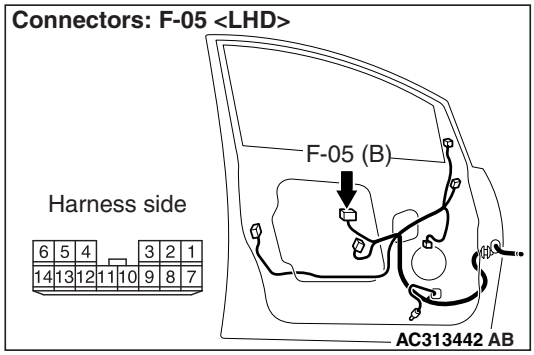

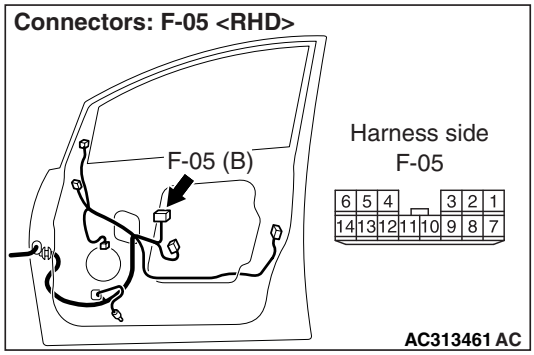

(1) Disconnect the connector, and measure at the wiring harness side.
(2) Turn the ignition switch to the ON position.

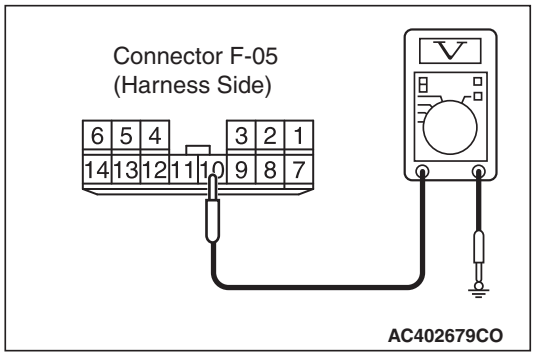

(3) Voltage between terminal 10 and body earth

OK: System voltage

Q: Is the check result normal?
YES : Go to Step 11.
NO : Go to Step 8.

Step 8. Voltage measurement at C-217 power window relay connector.

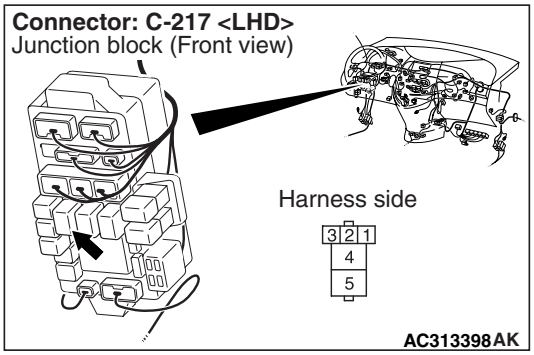

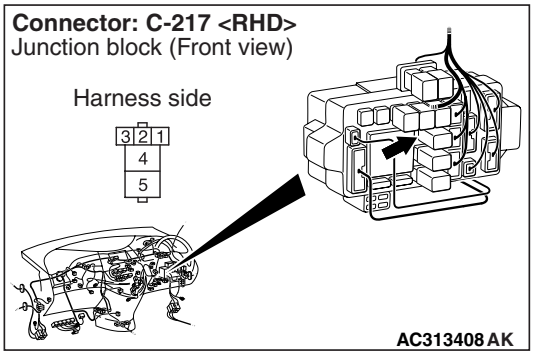

(1) Disconnect the connector, and measure at the wiring harness side.
(2) Turn the ignition switch to the ON position.

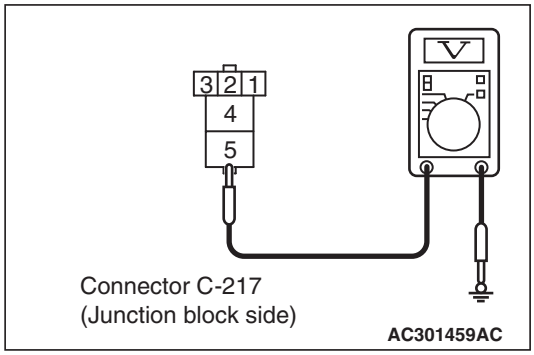

(3) Voltage between terminal 5 and body earth

OK: System voltage

Q: Is the check result normal?
YES : Go to Step 10.
NO : Go to Step 9.

Step 9. Check the wiring harness between C-217 power window relay connector terminal No.5 and fusible link (5).

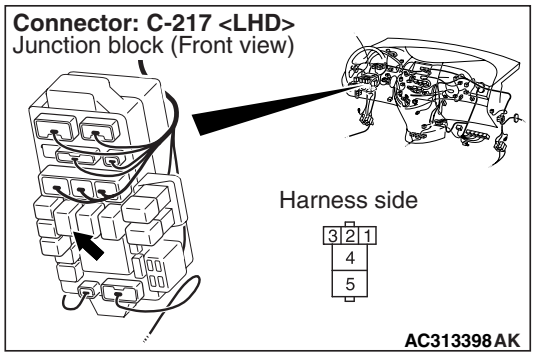

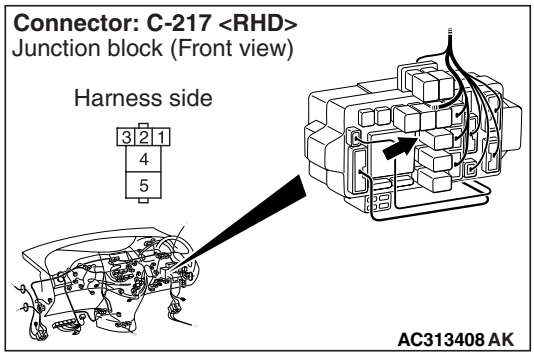

NOTE:

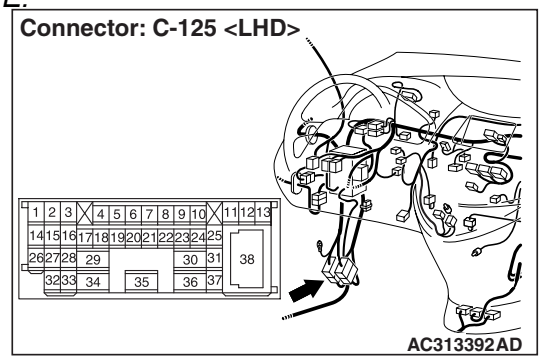

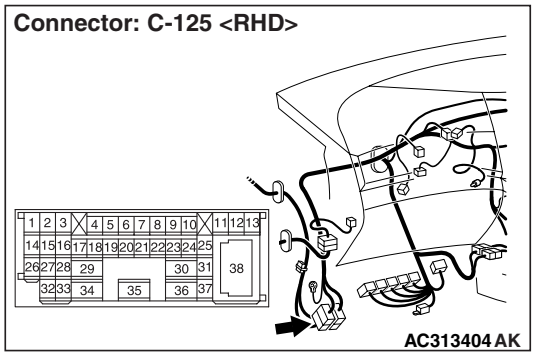

Main Index
Group TOC

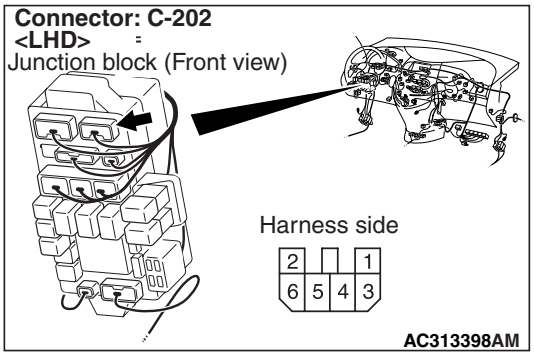

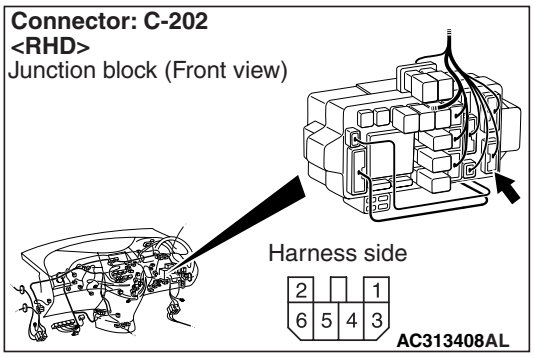

Prior to the wiring harness inspection, check intermediate connectors C-125 and junction block connector C-202, and repair if necessary.

- Check the power supply line for open circuit.

Q: Is the check result normal?

YES : The trouble can be an intermittent malfunction (Refer to GROUP 00, How to Cope with Intermittent Malfunction P.00-5).

NO : Repair the wiring harness.

Step 10. Resistance measurement at C-217 power window relay connector.

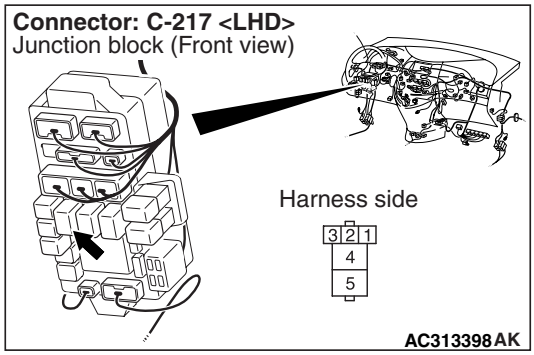

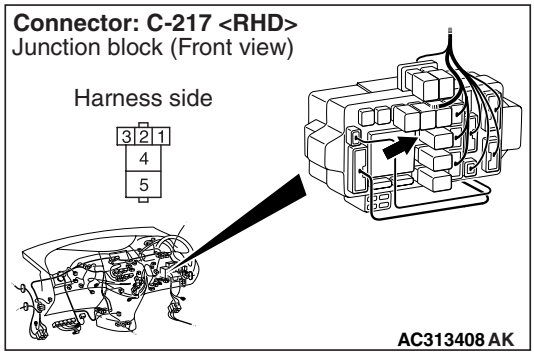

(1) Disconnect the connector, and measure at the wiring harness side.

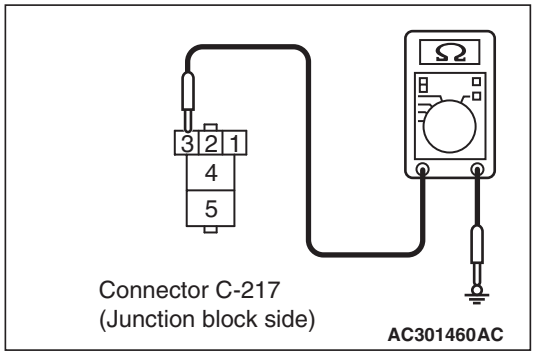

(2) Resistance between terminal 3 and body earth

OK: 2Ω or less

Q: Is the check result normal?

YES : Go to Step 13.

NO : Go to Step 11.

Main Index
Group TOC

Step 11. Connector check: C-49 earth connector

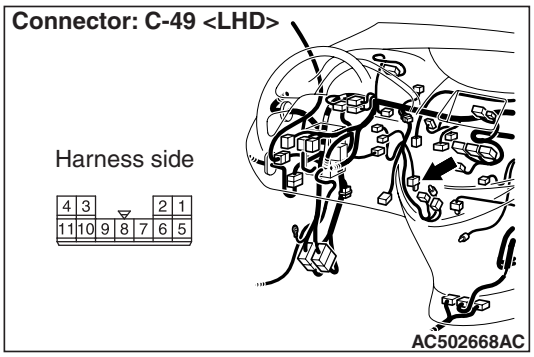

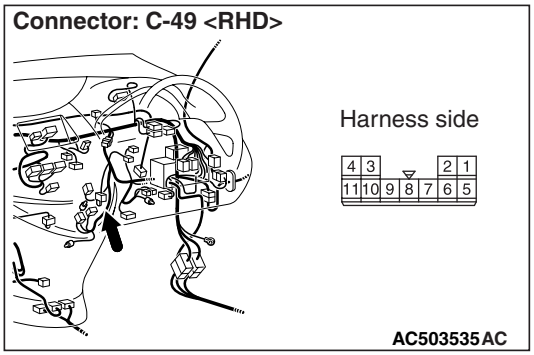

Q: Is the check result normal?
YES : Go to Step 12.
NO : Repair the connector.

Step 12. Check the wiring harness between C-217 power window relay connector terminal No.3 and C-49 earth connector terminal No.8.

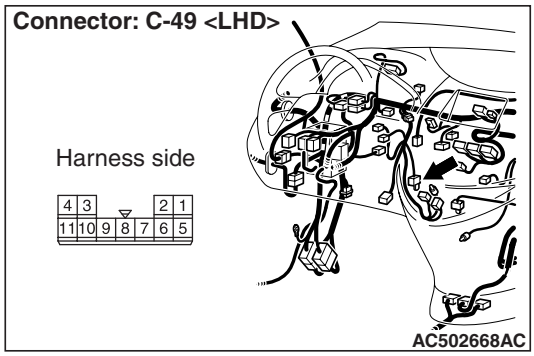

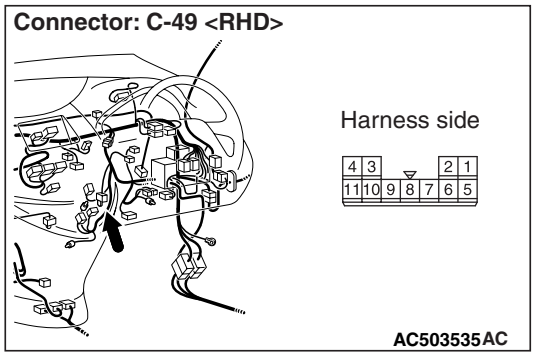

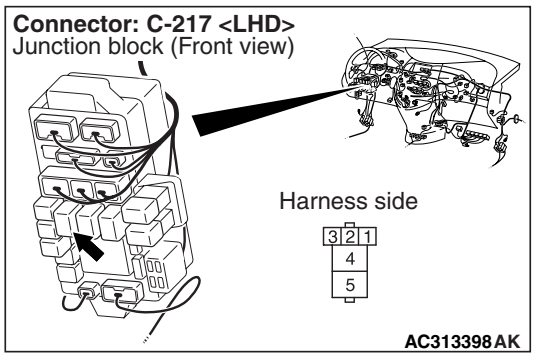

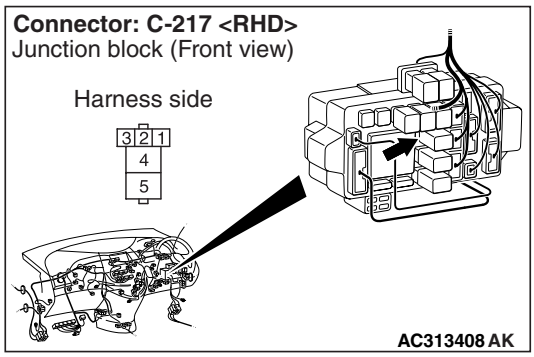

Main Index
Group TOC

NOTE:

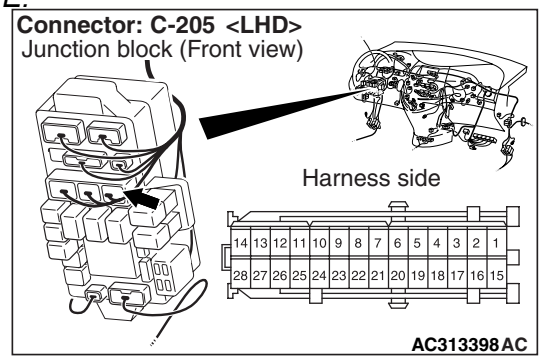

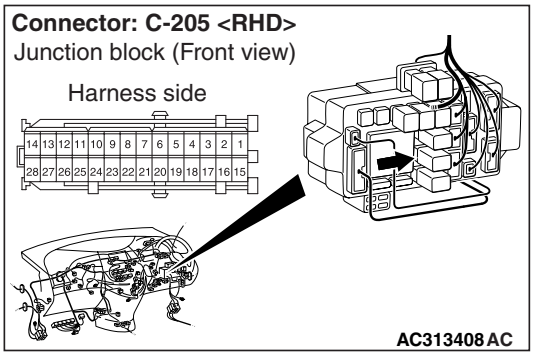

Prior to the wiring harness inspection, check junction block connector C-205, and repair if necessary.

- Check the earth wires for open circuit.

Q: Is the check result normal?

YES : The trouble can be an intermittent malfunction (Refer to GROUP 00, How to Cope with Intermittent Malfunction P.00-5).

NO : Repair the wiring harness.

Step 13. Connector check: C-219 ETACS-ECU connector

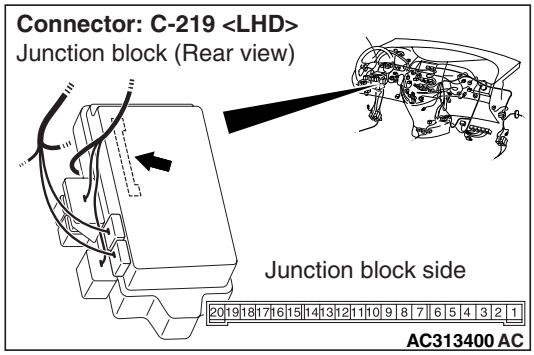

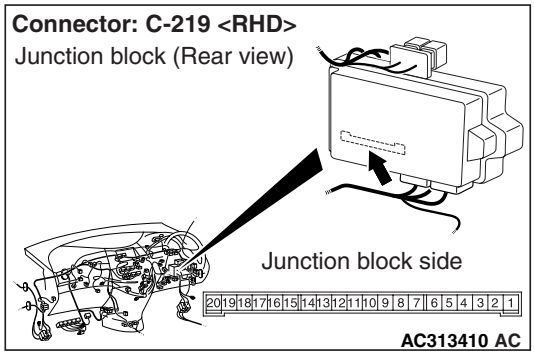

Q: Is the check result normal?

YES : Go to Step 14.

NO : Repair the connector.

Main Index
Group TOC

Step 14. Check the wiring harness between C-217 power window relay connector terminal No.4 and F-05 power window main switch connector terminal No.10.

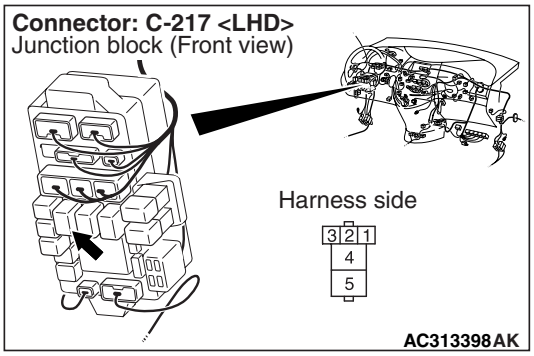

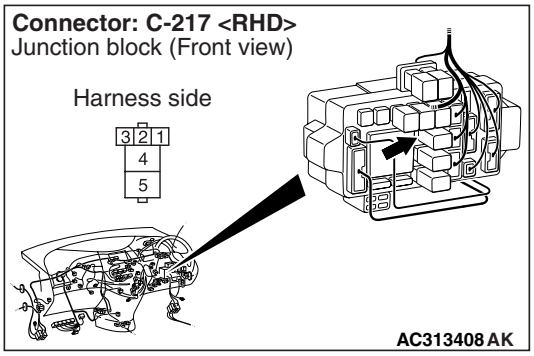

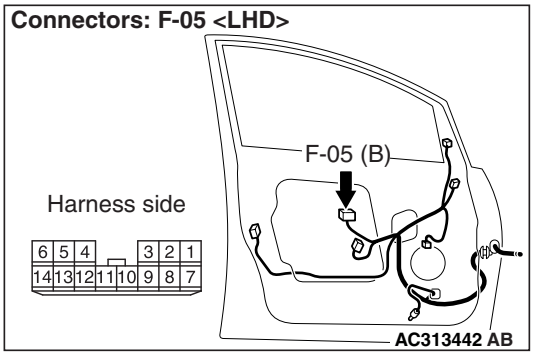

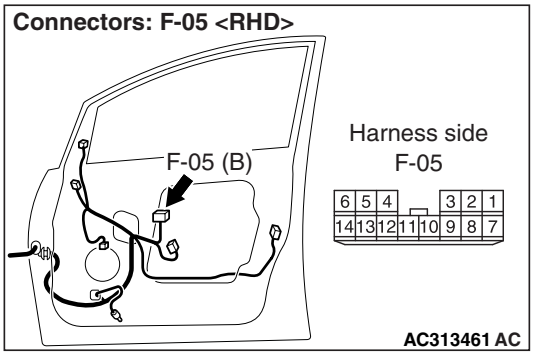

NOTE:

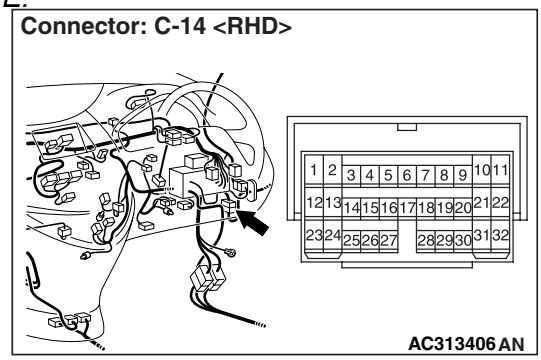

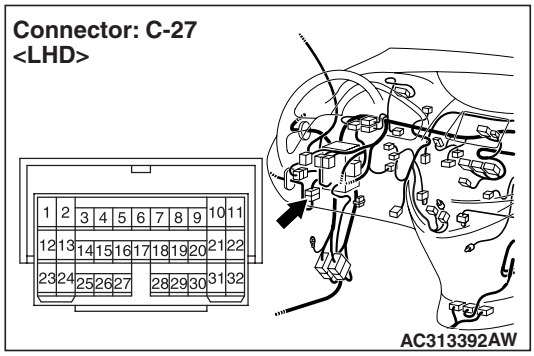

Prior to the wiring harness inspection, check joint connector C-27 <LH drive vehicles>, C-14 <RH drive vehicles> and repair if necessary.

- Check the power supply line for open circuit.

Q: Is the check result normal?

YES : The trouble can be an intermittent malfunction (Refer to GROUP 00, How to Cope with Intermittent Malfunction P.00-5).

NO : Repair the harness wire, and then go to Step 15.

Main Index
Group TOC

Step 15. Resistance measurement at the F-05 power window main switch connector.

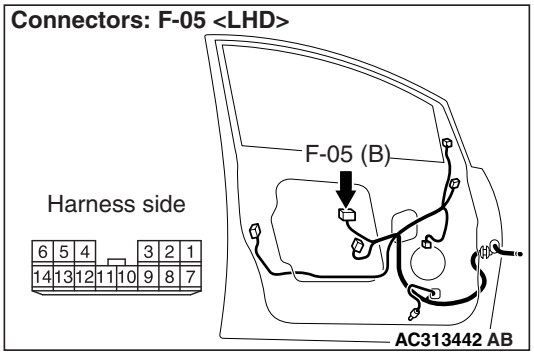

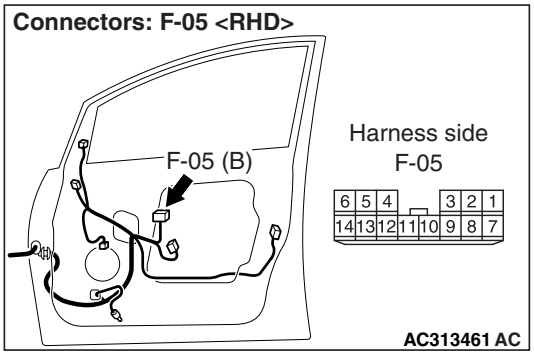

(1) Disconnect the connector, and measure at the wiring harness side.

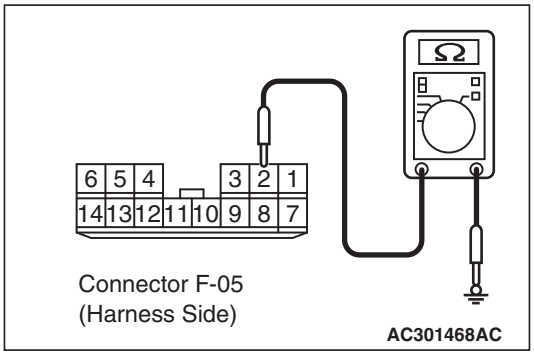

(2) Resistance between terminal 8 <LH drive vehicles> or 2 <RH drive vehicles> and body earth

OK: 2Ω or less

Q: Is the check result normal?
YES : Go to Step 17.
NO : Go to Step 16.

Step 16. Check the wiring harness between F-05 power window main switch connector terminal No.8 <LH drive vehicles> or No.2 <RH drive vehicles> and body earth.

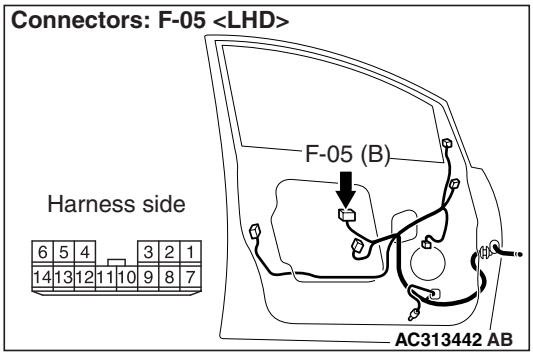

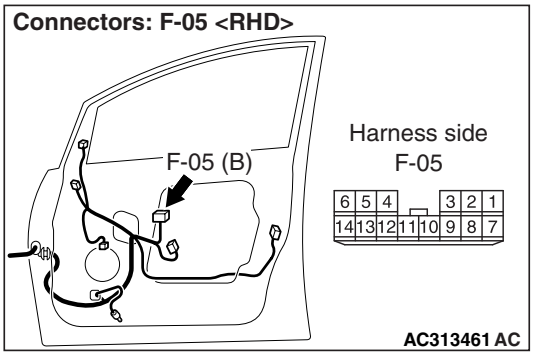

NOTE:

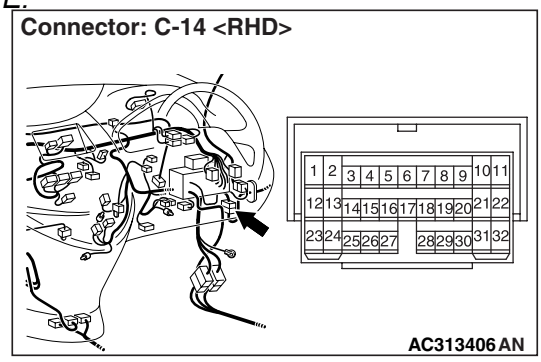

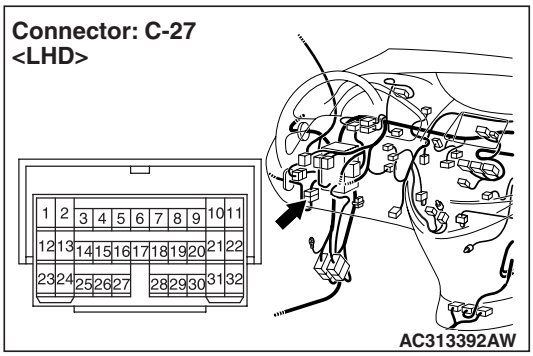

Prior to the wiring harness inspection, check intermediate connectors C-27 <LH drive vehicles>, C-14 <RH drive vehicles> and repair if necessary.

- Check the earth wires for open circuit.

Main Index
Group TOC

Q: Is the check result normal?

YES : The trouble can be an intermittent malfunction (Refer to GROUP 00, How to Cope with Intermittent Malfunction P.00-5).

NO : Repair the wiring harness.

Step 17. Retest the system.

Check that the all the power windows work.

Q: Is the check result normal?

YES : The trouble can be an intermittent malfunction (Refer to GROUP 00 – How to Cope with Intermittent Malfunction P.00-5).

NO : Replace the ETACS-ECU.

Main Index
Group TOC

INSPECTION PROCEDURE D-2: Driver's power window does not work by means of the power window main switch. <LH drive vehicles>

Power Window (Front: LH) Circuit <LHD>

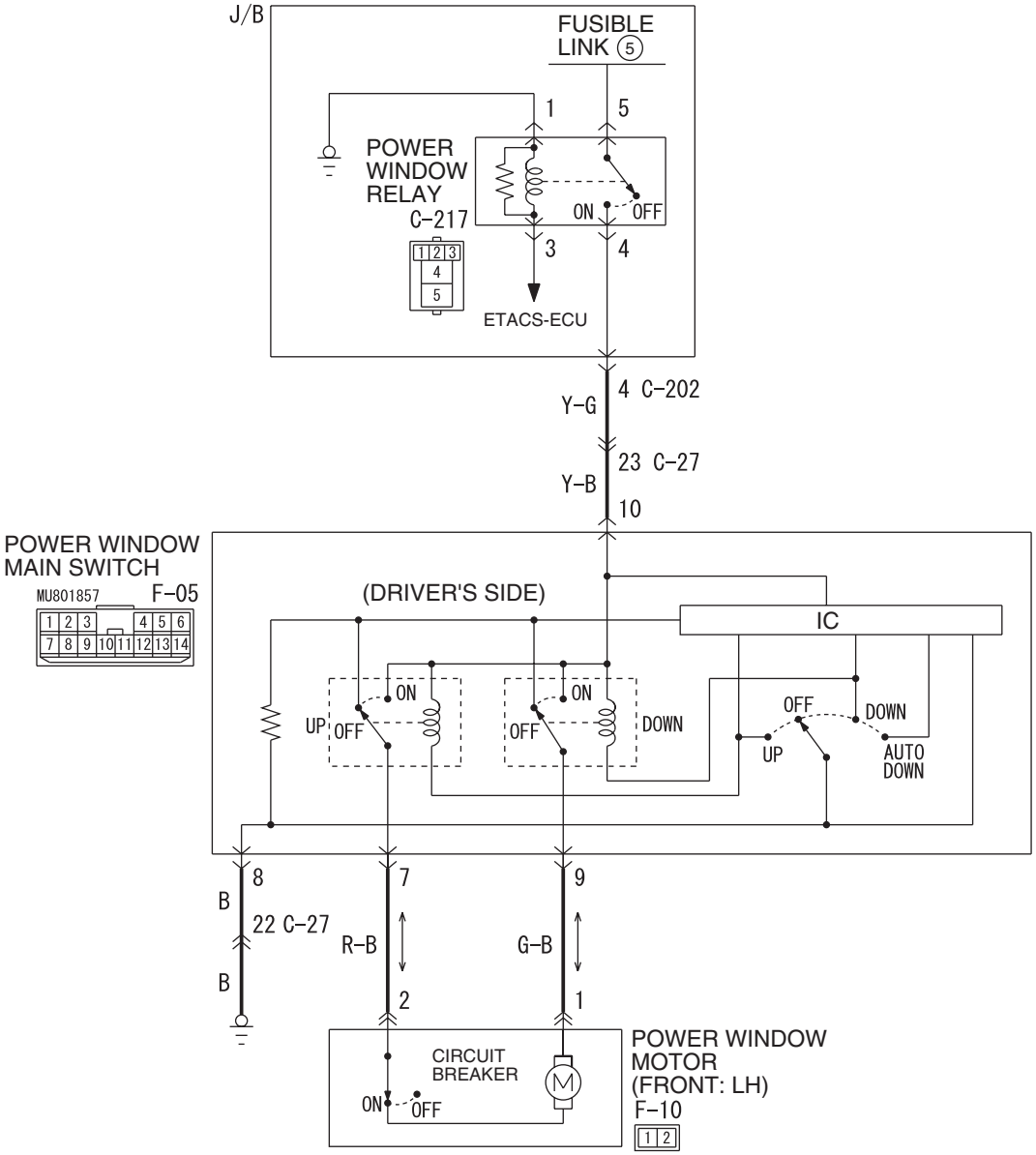

Wire colour code
B : Black LG : Light green G : Green L : Blue W : White Y : Yellow SB : Sky blue
BR : Brown O : Orange GR : Grey R : Red P : Pink V : Violet PU : Purple

W4X54X179A

COMMENTS ON TROUBLE SYMPTOM

If the driver's power window does not work by means of the power window main switch, the power window main switch or the driver's door power window motor may be defective.

POSSIBLE CAUSES

- Malfunction of the power window main switch
- Malfunction of the power window motor (front: LH)
- Damaged harness wires and connectors

Main Index
Group TOC

DIAGNOSIS PROCEDURE

Step 1. Check the power window main switch.
Check that all of the front passenger's and rear door power windows can operate by means of the power window main switch.

Q: Is the check result normal?
YES : Go to Step 2.
NO : Refer to Inspection Procedure D-1 "Power windows do not work at all <Except vehicles for China> P.54C-106."

Step 2. Connector check: F-05 power window main switch connector and F-10 power window motor (front: LH) connector

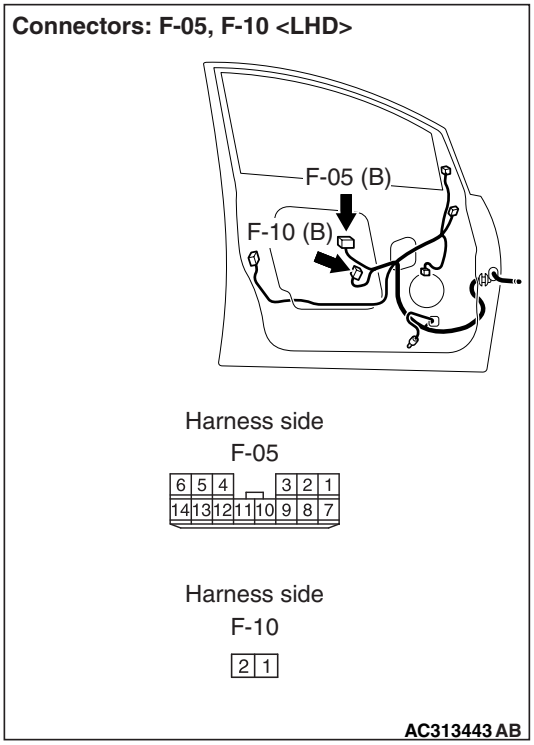

Q: Is the check result normal?
YES : Go to Step 3.
NO : Repair the connector.

Step 3. Check the power window main switch
Check that the power window main switch works normally. Refer to GROUP 42 – Door P.42-39.

Q: Is the check result normal?
YES : Go to Step 4.
NO : Replace the power window main switch.

Step 4. Check the power window motor
Check that the power window motor (front: LH) works normally. Refer to GROUP 42 – Door P.42-39.

Q: Is the check result normal?
YES : Go to Step 5.
NO : Replace the power window motor (front: LH).

Step 5. Check the wiring harness from F-10 power window motor (front: LH) connector terminal Nos. 1 and 2 to F-05 power window main switch connector terminal Nos. 9 and 7.

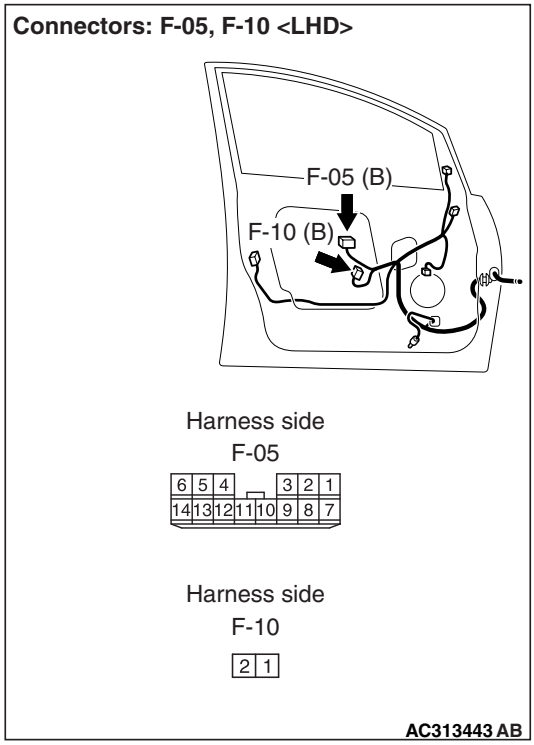

- Check the input and output lines for open or short circuit.

Q: Is the check result normal?
YES : The trouble can be an intermittent malfunction (Refer to GROUP 00 – How to Cope with Intermittent Malfunction P.00-5).
NO : Repair the wiring harness.

Main Index
Group TOC

INSPECTION PROCEDURE D-2: Driver's power window does not work by means of the power window main switch. <RH drive vehicles>

Power Window (Front: RH) Circuit <RHD>

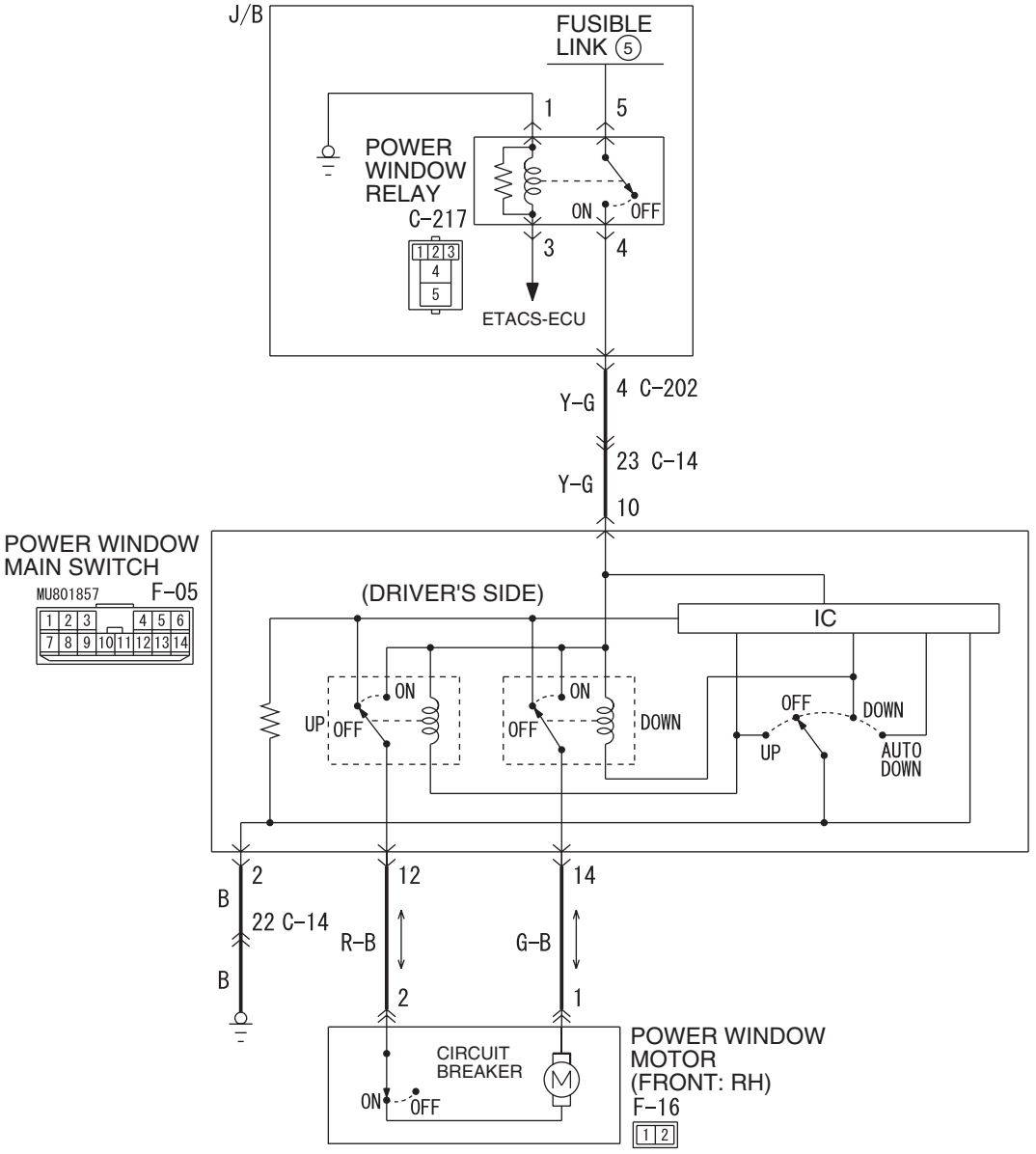

Wire colour code
B : Black LG : Light green G : Green L : Blue W : White Y : Yellow SB : Sky blue
BR : Brown O : Orange GR : Grey R : Red P : Pink V : Violet PU : Purple

W4X54X180A

COMMENTS ON TROUBLE SYMPTOM

If the driver's power window does not work by means of the power window main switch, the power window main switch or the driver's door power window motor may be defective.

POSSIBLE CAUSES

- Malfunction of the power window main switch
- Malfunction of the power window motor (front: RH)
- Damaged harness wires and connectors

Main Index
Group TOC

DIAGNOSIS PROCEDURE

Step 1. Check the power window main switch.
Check that all of the front passenger's and rear door power windows can operate by means of the power window main switch.

Q: Is the check result normal?
YES : Go to Step 2.
NO : Refer to Inspection Procedure D-1 "Power windows do not work at all P.54C-106."

Step 2. Connector check: F-05 power window main switch connector and F-16 power window motor (front: RH) connector

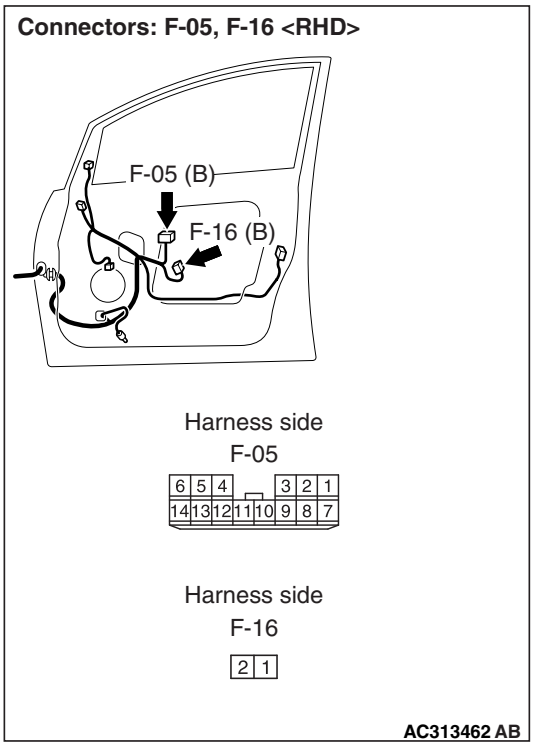

Q: Is the check result normal?
YES : Go to Step 3.
NO : Repair the connector.

Step 3. Check the power window main switch
Check that the power window main switch works normally. Refer to GROUP 42 – Door P.42-39.

Q: Is the check result normal?
YES : Go to Step 4.
NO : Replace the power window main switch.

Step 4. Check the power window motor
Check that the power window motor (front: RH) works normally. Refer to GROUP 42 – Door P.42-39.

Q: Is the check result normal?
YES : Go to Step 5.
NO : Replace the power window motor (front: RH).

Step 5. Check the wiring harness from F-16 power window motor (front: RH) connector terminal Nos. 1 and 2 to F-05 power window main switch connector terminal Nos. 14 and 12.

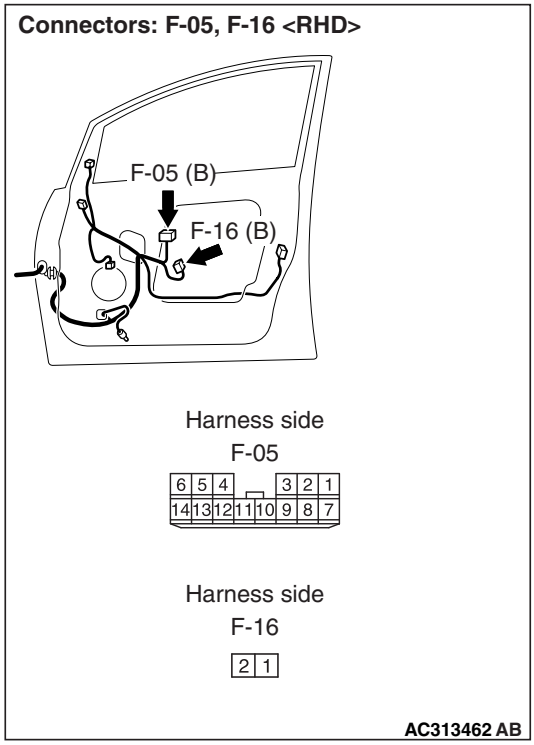

- Check the input and output lines for open or short circuit.

Q: Is the check result normal?
YES : The trouble can be an intermittent malfunction (Refer to GROUP 00 – How to Cope with Intermittent Malfunction P.00-5).
NO : Repair the wiring harness.

Main Index
Group TOC

INSPECTION PROCEDURE D-3: Relevant power window(s) do not work by means of the front and rear power window sub switches.

Power Window Sub Switch Circuit <LHD>

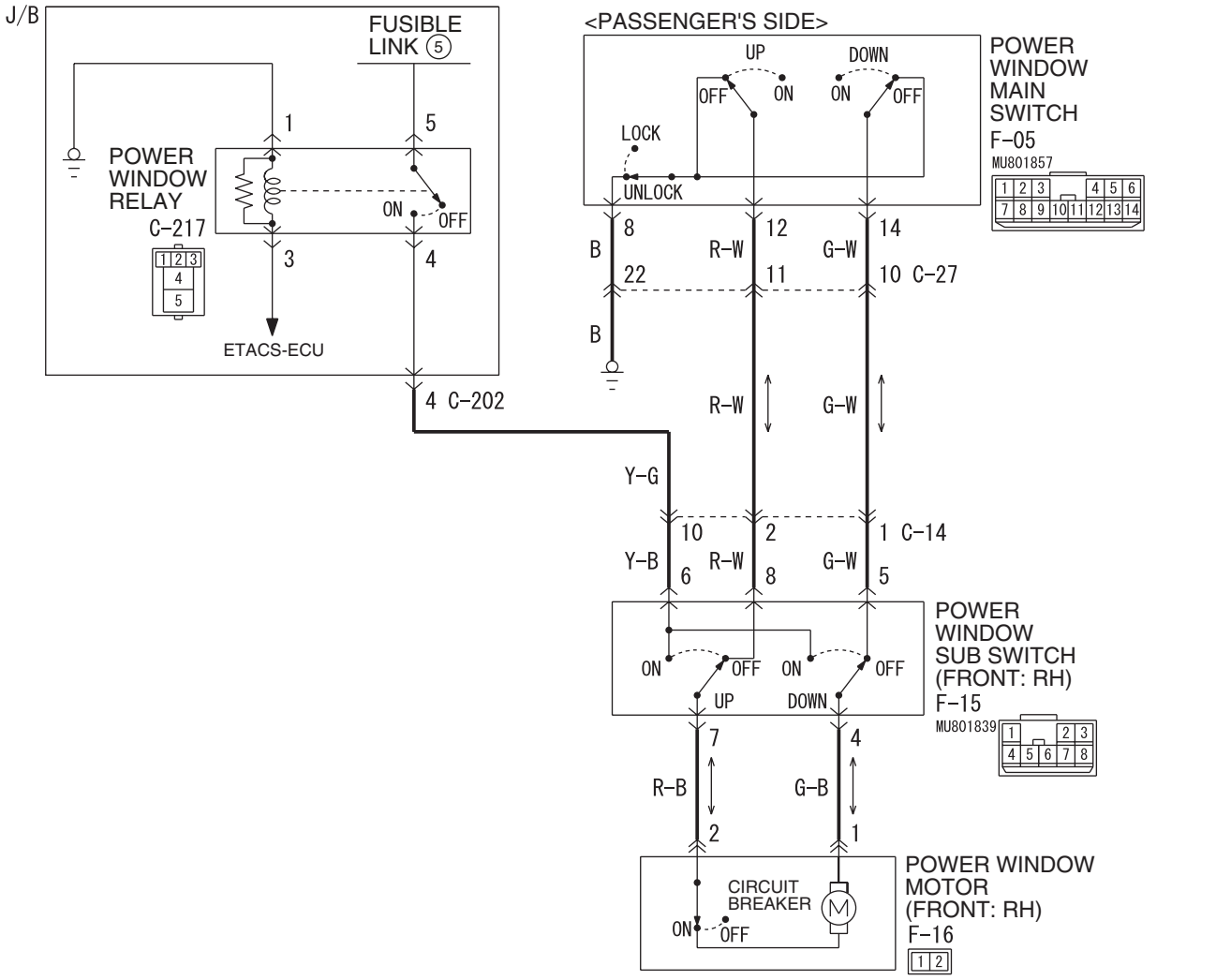

Wire colour code
B : Black LG : Light green G : Green L : Blue W : White Y : Yellow SB : Sky blue
BR : Brown O : Orange GR : Grey R : Red P : Pink V : Violet PU : Purple

W4X54X181A

Main Index
Group TOC

Power Window Sub Switch Circuit <RHD>

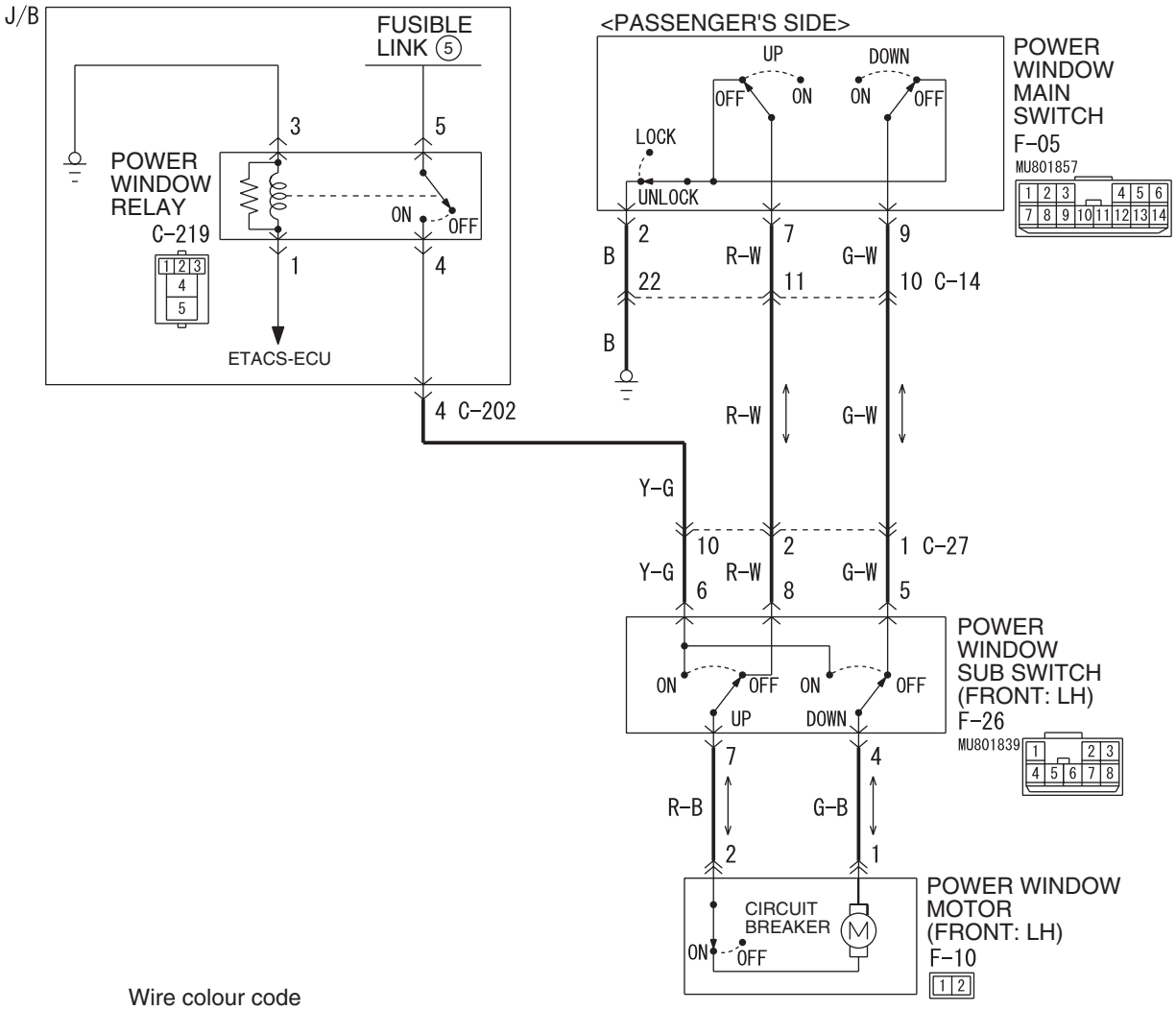

Wire colour code
B : Black LG : Light green G : Green L : Blue W : White Y : Yellow SB : Sky blue
BR : Brown O : Orange GR : Gray R : Red P : Pink V : Violet

W4X54X027A

Main Index
Group TOC

Power Window Sub Switch Circuit

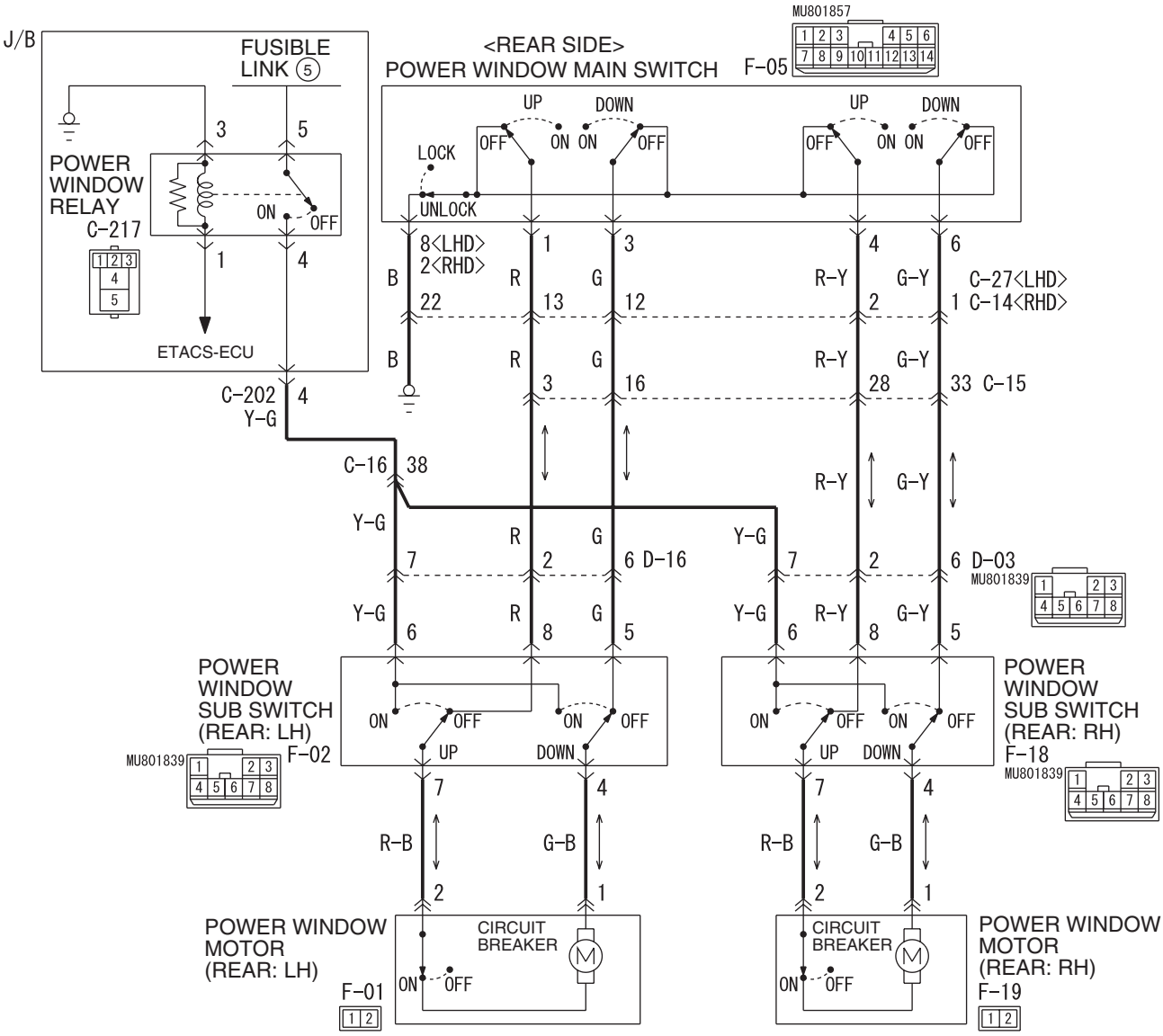

COMMENTS ON TROUBLE SYMPTOM

If the front passenger's or rear power window does not work by means of the respective power window sub switch, the power window sub switch or the power window motor may be defective.

POSSIBLE CAUSES <LH DRIVE VEHICLES>

- Malfunction of the power window sub switch (front: RH), the power window sub switch (rear: RH) or the power window sub switch (rear: LH)
- Malfunction of the power window motor (front: RH), the power window motor (rear: RH) or the power window motor (rear: LH)
- Damaged harness wires and connectors

Main Index
Group TOC

POSSIBLE CAUSES <RH DRIVE VEHICLES>

- Malfunction of the power window sub switch (front: LH), the power window sub switch (rear: RH) or the power window sub switch (rear: LH)
- Malfunction of the power window motor (front: LH), the power window motor (rear: RH) or the power window motor (rear: LH)
- Damaged harness wires and connectors

DIAGNOSIS PROCEDURE

Step 1. Check the power window main switch.
Check that the power window lock switch is turned off.

Q: Is the check result normal?
YES : Go to Step 2.
NO : Turn off the power window lock switch.

Step 2. Connector check: F-05 power window main switch connector

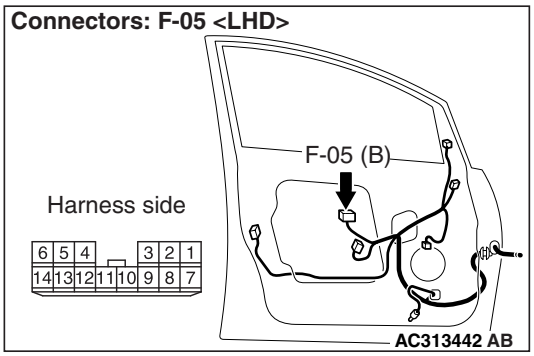

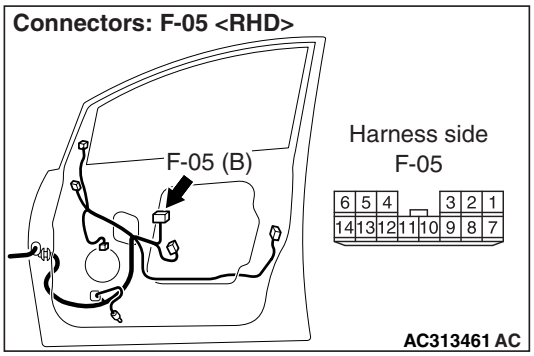

Q: Is the check result normal?
YES : Go to Step 3.
NO : Repair the connector.

Step 3. Check the power window main switch
Check that the power window main switch works normally. Refer to GROUP 42 – Door P.42-39.

Q: Is the check result normal?
YES : Go to Step 4.
NO : Replace the power window main switch.

Step 4. Determine a trouble spot.

Q: Which power window does not work?
Front passenger's door <LH drive vehicles> : Go to Step 5.
Front passenger's door <RH drive vehicles> : Go to Step 13.
Rear right door : Go to Step 21.
Rear left door : Go to Step 29.

Step 5. Connector check: F-15 power window sub switch (front: RH) connector and F-16 power window motor (front: RH) connector

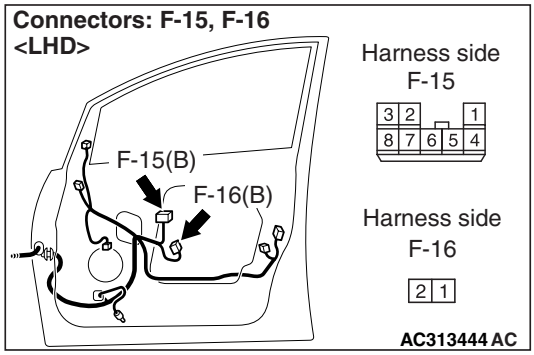

Q: Is the check result normal?
YES : Go to Step 6.
NO : Repair the connector.

Step 6. Check the power window sub switch (front: RH)
Check that the power window sub switch (front: RH) works normally. Refer to GROUP 42 – Door P.42-39.

Q: Is the check result normal?
YES : Go to Step 7.
NO : Replace the power window sub switch (front: RH).

Step 7. Check the power window motor (front: RH)
Check that the power window motor (front: RH) works normally. Refer to GROUP 42 – Door P.42-39.

Q: Is the check result normal?
YES : Go to Step 8.
NO : Replace the power window motor (front: RH).

Main Index
Group TOC

Step 8. Voltage measurement at F-15 power window sub switch (front: RH) connector.

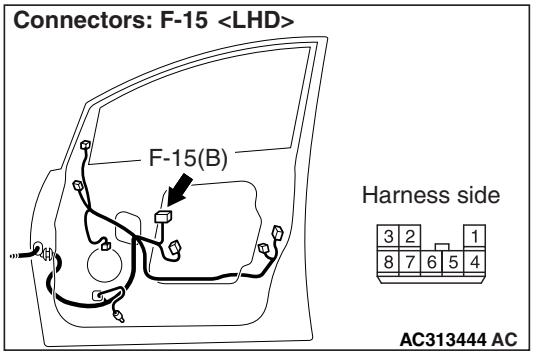

(1) Disconnect the connector, and measure at the wiring harness side.
(2) Turn the ignition switch to the ON position.

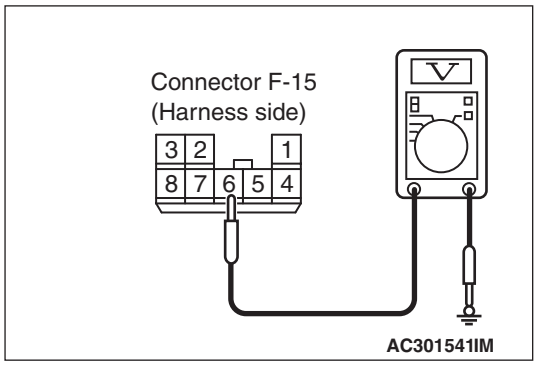

(3) Voltage between terminal 6 and body earth

OK: System voltage

Q: Is the check result normal?
YES : Go to Step 11.
NO : Go to Step 9.

Step 9. Connector check: C-217 power window relay connector

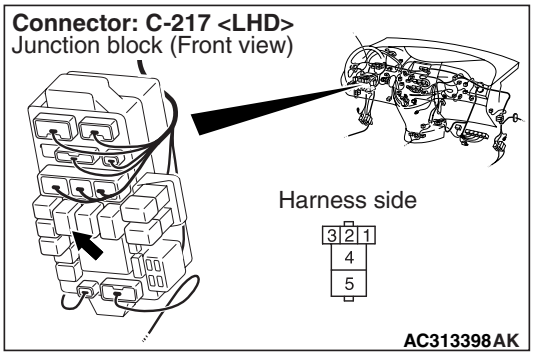

Q: Is the check result normal?
YES : Go to Step 10.
NO : Repair the connector.

Step 10. Check the wiring harness from F-15 power window sub switch (front: RH) connector terminal No.6 to C-217 power window relay connector terminal No.4.

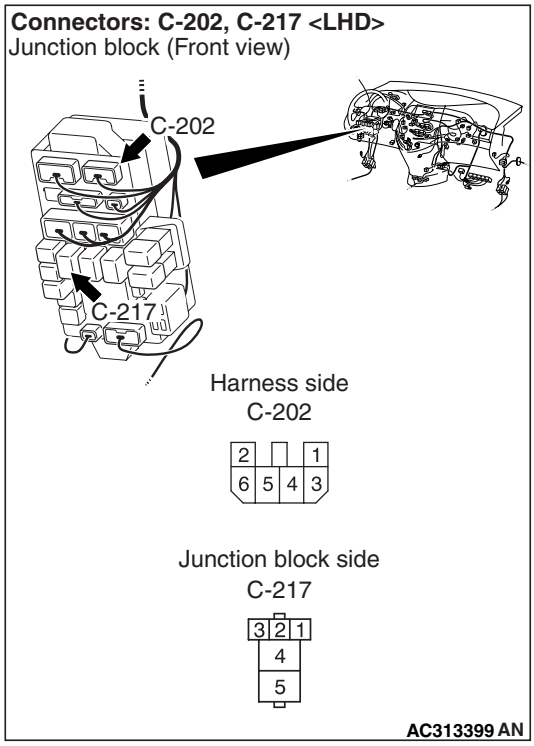

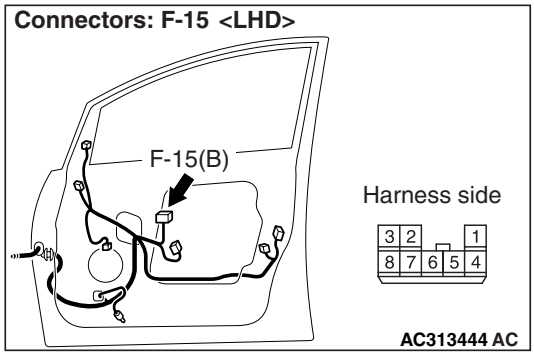

NOTE:

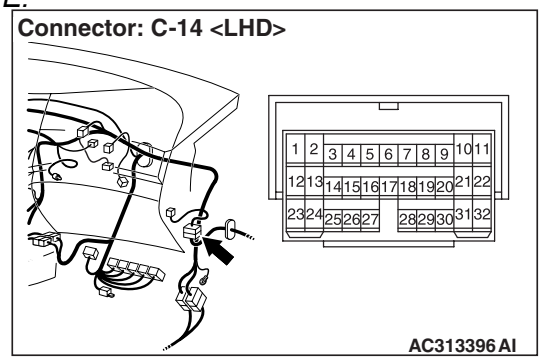

Prior to the wiring harness inspection, check intermediate connectors C-14 and junction block connector C-202, and repair if necessary.

- Check the power supply line for open circuit.

Q: Is the check result normal?
YES : The trouble can be an intermittent malfunction (Refer to GROUP 00, How to Cope with Intermittent Malfunction P.00-5).
NO : Repair the wiring harness.

Step 11. Check the wiring harness from F-16 power window motor (front: RH) connector terminal Nos. 1 and 2 to F-15 power window sub switch (front: RH) connector terminal Nos. 4 and 7.

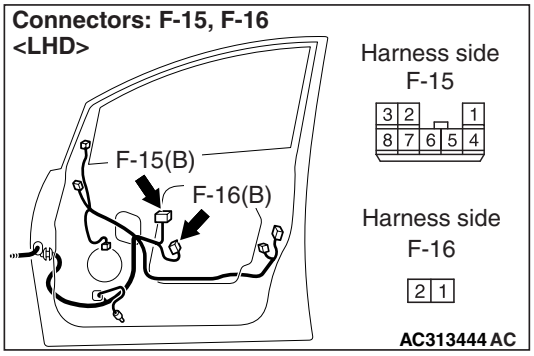

- Check the input and output lines for open or short circuit.

Q: Is the check result normal?
YES : Go to Step 12.
NO : Repair the wiring harness.

Step 12. Check the wiring harness from F-05 power window main switch connector terminal Nos. 12 and 14 to F-15 power window sub switch (front: RH) connector terminal Nos. 8 and 5.

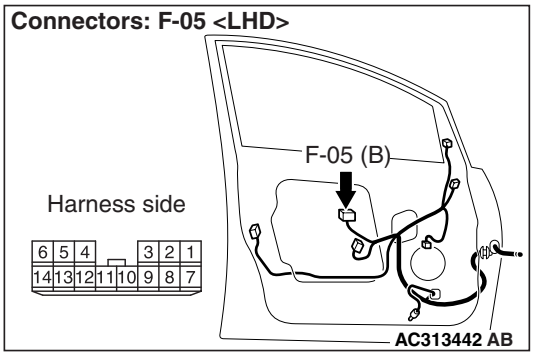

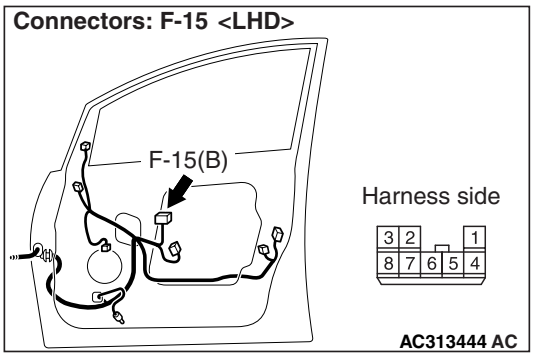

NOTE:

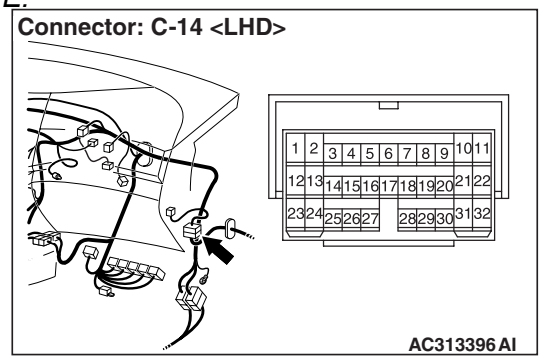

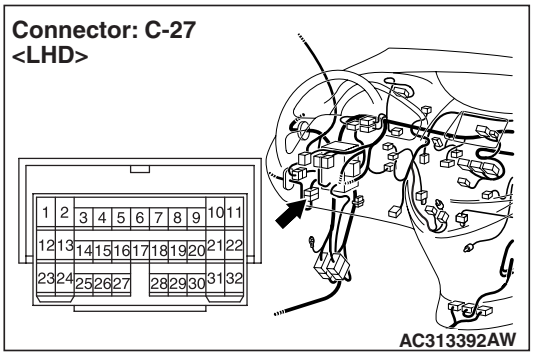

Prior to the wiring harness inspection, check intermediate connectors C-14,C-27 , and repair if necessary.

- Check the input and output lines for open or short circuit.

Q: Is the check result normal?
YES : The trouble can be an intermittent malfunction (Refer to GROUP 00 – How to Cope with Intermittent Malfunction P.00-5).
NO : Repair the wiring harness.

Step 13. Connector check: F-26 power window sub switch (front: LH) connector and F-10 power window motor (front: LH) connector

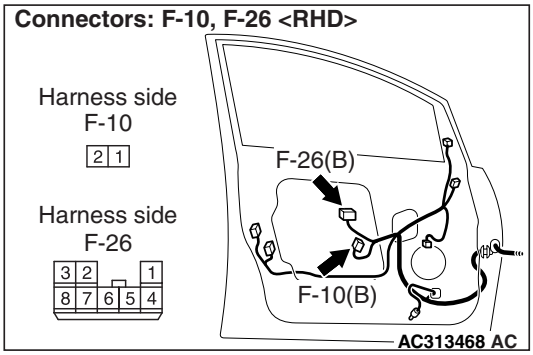

Q: Is the check result normal?
YES : Go to Step 14.
NO : Repair the connector.

Main Index
Group TOC

Step 14. Check the power window sub switch (front: LH)

Check that the power window sub switch (front: LH) works normally. Refer to GROUP 42 – Door P.42-39.

Q: Is the check result normal?

YES : Go to Step 15.

NO : Replace the power window sub switch (front: LH).

Step 15. Check the power window motor (front: LH)

Check that the power window motor (front: LH) works normally. Refer to GROUP 42 – Door P.42-39.

Q: Is the check result normal?

YES : Go to Step 16.

NO : Replace the power window motor (front: LH).

Step 16. Voltage measurement at F-26 power window sub switch (front: LH) connector.

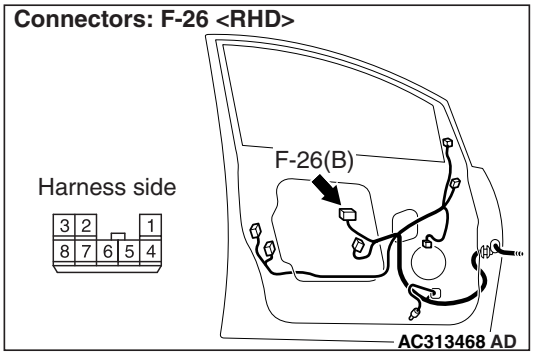

(1) Disconnect the connector, and measure at the wiring harness side.

(2) Turn the ignition switch to the ON position.

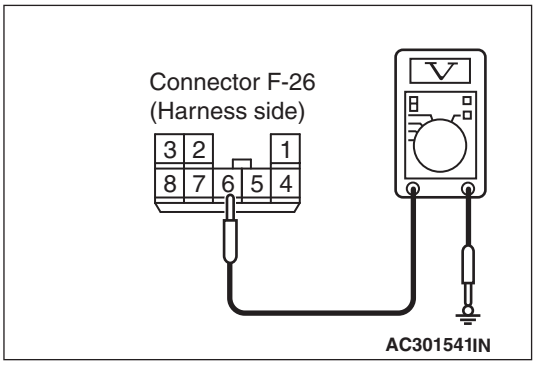

(3) Voltage between terminal 6 and body earth

OK: System voltage

Q: Is the check result normal?

YES : Go to Step 19.

NO : Go to Step 17.

Step 17. Connector check: C-217 power window relay connector

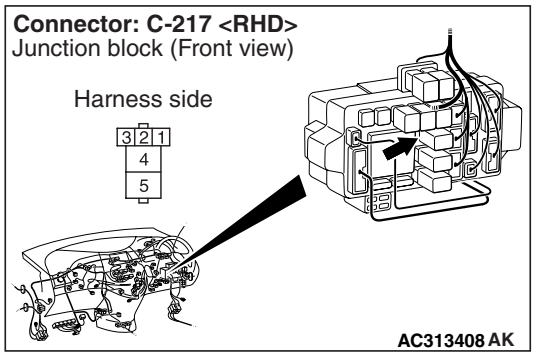

Q: Is the check result normal?

YES : Go to Step 18.

NO : Repair the connector.

Step 18. Check the wiring harness from F-26 power window sub switch (front: LH) connector terminal No.6 to C-217 power window relay connector terminal No.4.

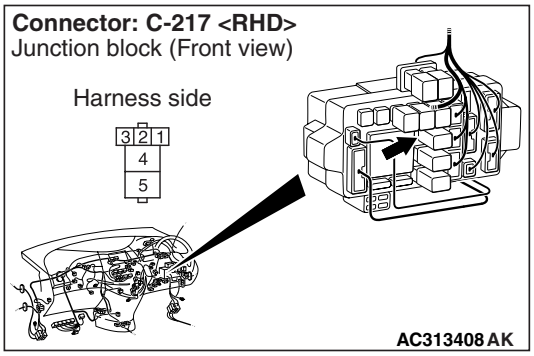

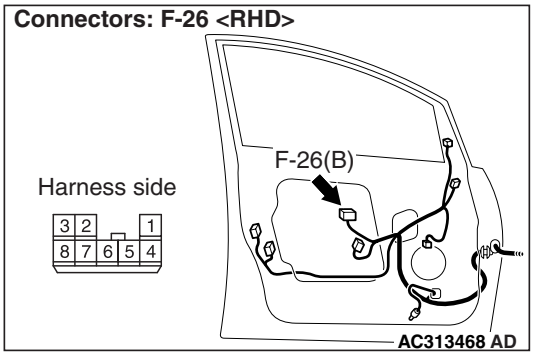

NOTE:

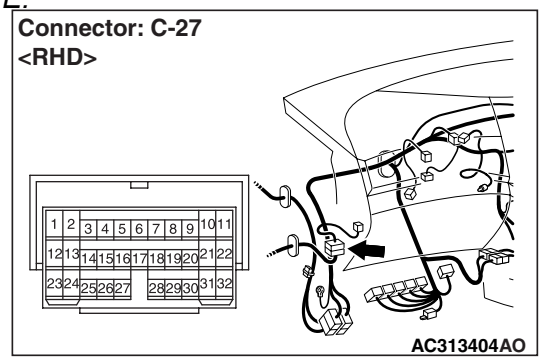

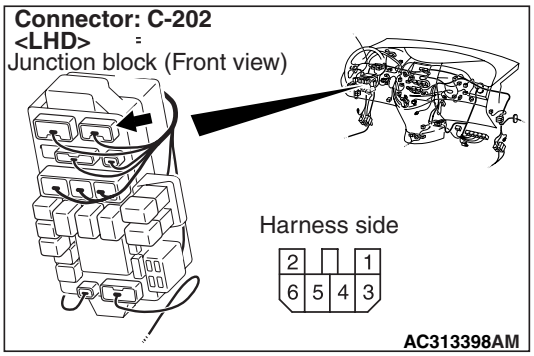

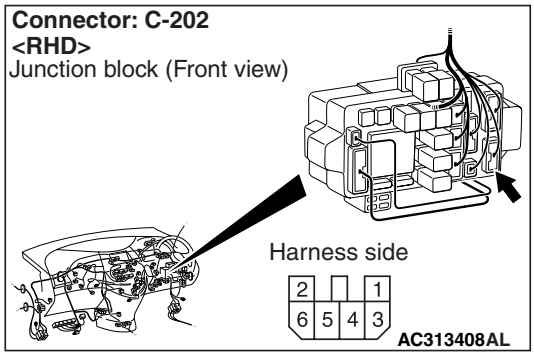

Prior to the wiring harness inspection, check intermediate connectors C-27 and junction block connector C-202, and repair if necessary.

- Check the power supply line for open circuit.

Q: Is the check result normal?

YES : The trouble can be an intermittent malfunction (Refer to GROUP 00, How to Cope with Intermittent Malfunction P.00-5).

NO : Repair the wiring harness.

Step 19. Check the wiring harness from F-10 power window motor (front: LH) connector terminal Nos. 1 and 2 to F-26 power window sub switch (front: LH) connector terminal Nos. 4 and 7.

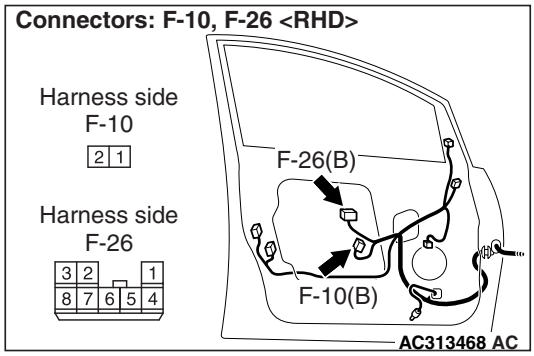

- Check the input and output lines for open or short circuit.

Q: Is the check result normal?

YES : Go to Step 20.

NO : Repair the wiring harness.

Main Index
Group TOC

Step 20. Check the wiring harness from F-05 power window main switch connector terminal Nos. 7 and 9 to F-26 power window sub switch (front: RH) connector terminal Nos. 8 and 5.

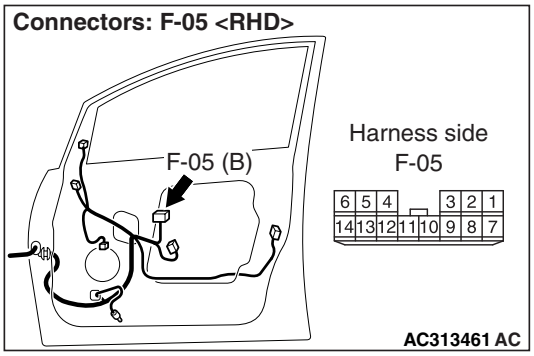

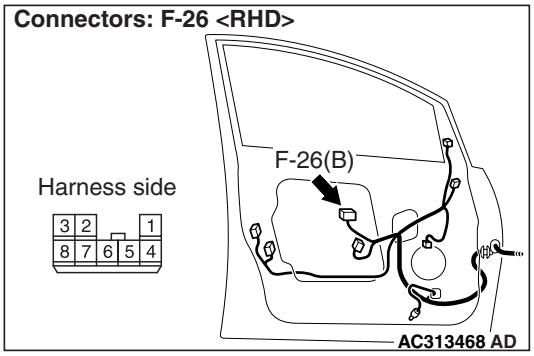

NOTE:

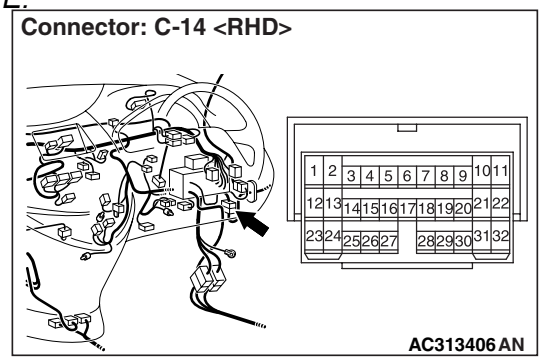

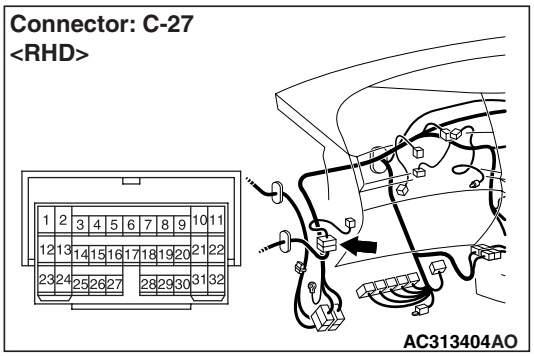

Prior to the wiring harness inspection, check intermediate connectors C-14,C-27 , and repair if necessary.

- Check the input and output lines for open or short circuit.

Q: Is the check result normal?

YES : The trouble can be an intermittent malfunction (Refer to GROUP 00 – How to Cope with Intermittent Malfunction P.00-5).

NO : Repair the wiring harness.

Step 21. Connector check: F-18 power window sub switch (rear: RH) connector and F-19 power window motor (rear: RH) connector

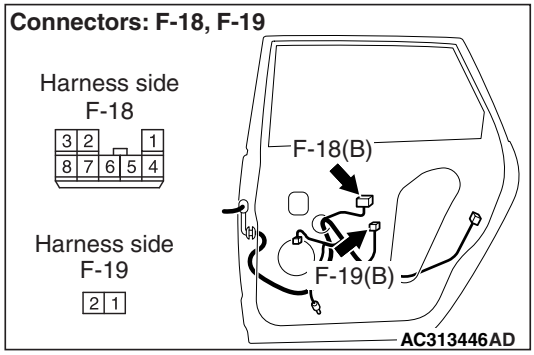

Q: Is the check result normal?

YES : Go to Step 22.

NO : Repair the connector.

Step 22. Check the power window sub switch (rear: RH)

Check that the power window sub switch (rear: RH) works normally. Refer to GROUP 42 – Door P.42-39.

Q: Is the check result normal?

YES : Go to Step 23.

NO : Replace the power window sub switch (rear: RH).

Step 23. Check the power window motor (rear: RH)

Check that the power window motor (rear: RH) works normally. Refer to GROUP 42 – Door P.42-39.

Q: Is the check result normal?

YES : Go to Step 24.

NO : Replace the power window motor (rear: RH).

Step 24. Voltage measurement at F-18 power window sub switch (rear: RH) connector.

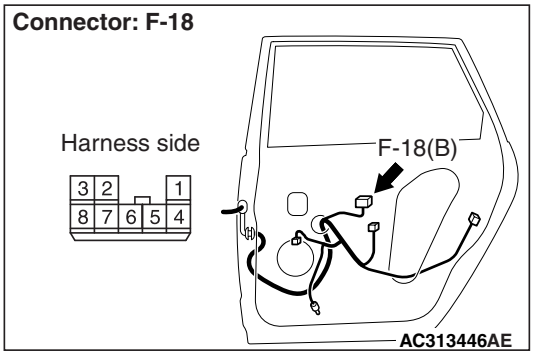

(1) Disconnect the connector, and measure at the wiring harness side.
(2) Turn the ignition switch to the ON position.

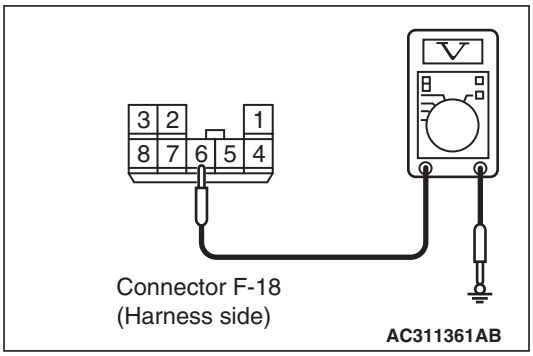

(3) Voltage between terminal 6 and body earth

OK: System voltage

Q: Is the check result normal?
YES : Go to Step 27.
NO : Go to Step 25.

Step 25. Connector check: C-217 power window relay connector

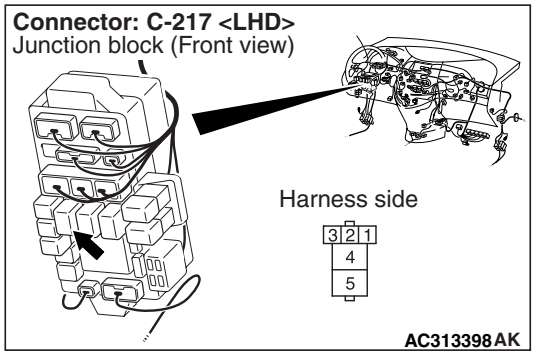

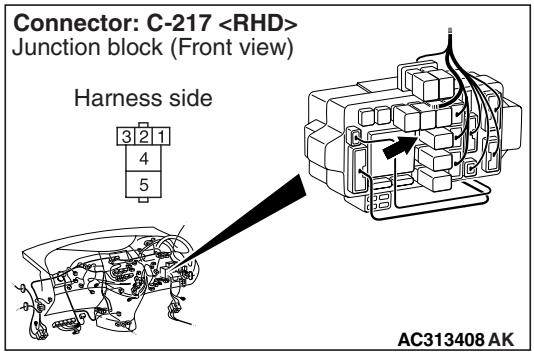

Q: Is the check result normal?
YES : Go to Step 26.
NO : Repair the connector.

Main Index
Group TOC

Step 26. Check the wiring harness from F-18 power window sub switch (rear: RH) connector terminal No.6 to C-217 power window relay connector terminal No.4.

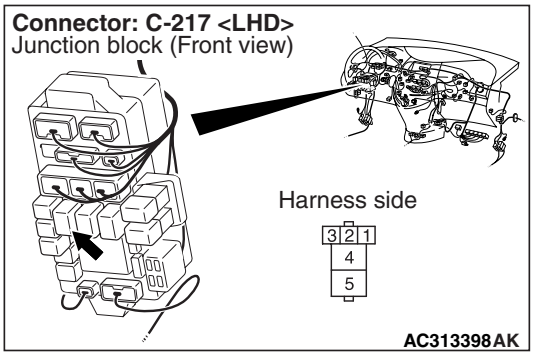

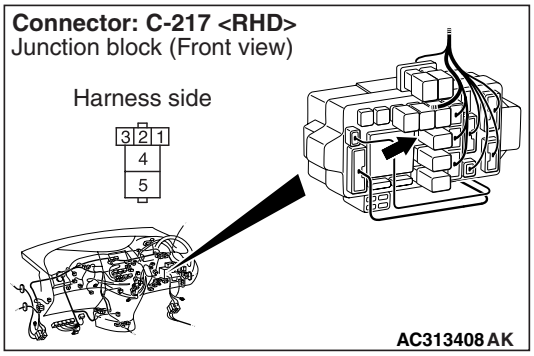

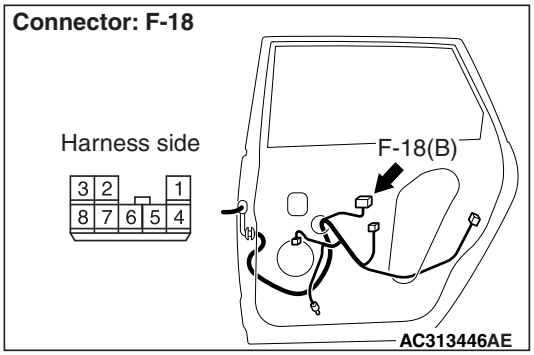

NOTE:

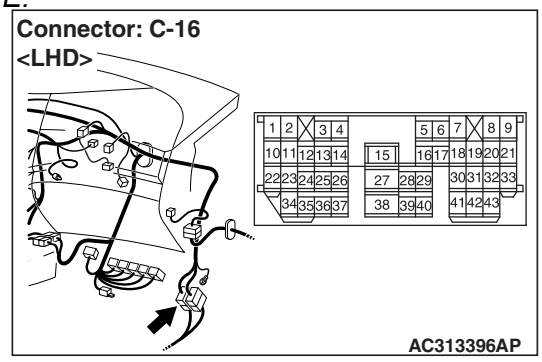

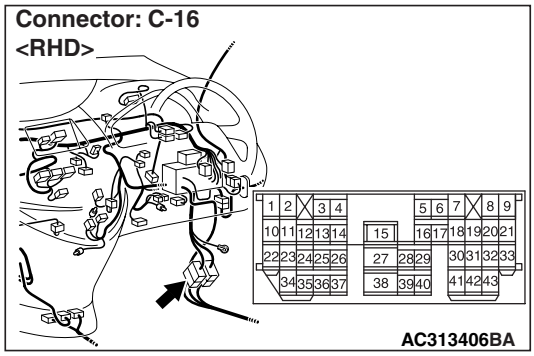

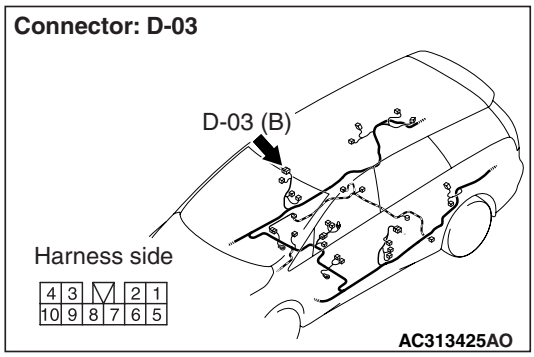

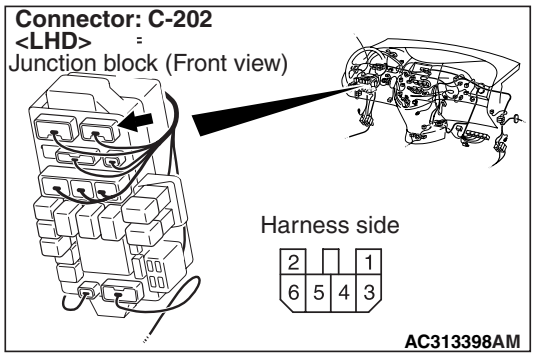

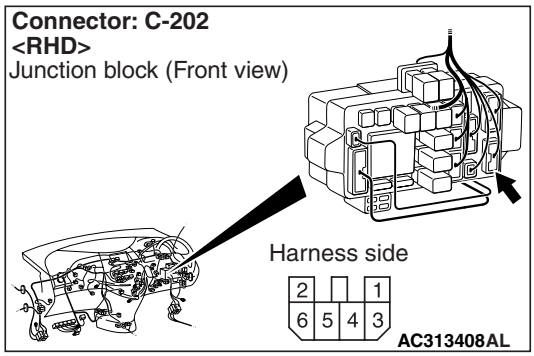

Prior to the wiring harness inspection, check intermediate connectors C-16, D-03 and junction block connector C-202, and repair if necessary.

- Check the power supply line for open circuit.

Q: Is the check result normal?

YES : The trouble can be an intermittent malfunction (Refer to GROUP 00, How to Cope with Intermittent Malfunction P.00-5).

NO : Repair the wiring harness.

Step 27. Check the wiring harness from F-19 power window motor (rear: RH) connector terminal Nos. 1 and 2 to F-18 power window sub switch (rear: RH) connector terminal Nos. 4 and 7.

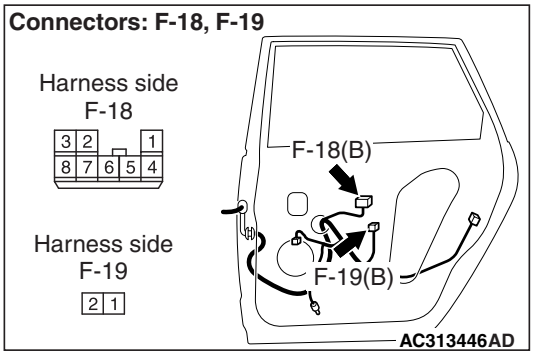

- Check the input and output lines for open or short circuit.

Q: Is the check result normal?
YES : Go to Step 28.
NO : Repair the wiring harness.

Step 28. Check the wiring harness from F-05 power window main switch connector terminal Nos. 4 and 6 to F-18 power window sub switch (rear: RH) connector terminal Nos. 8 and 5.

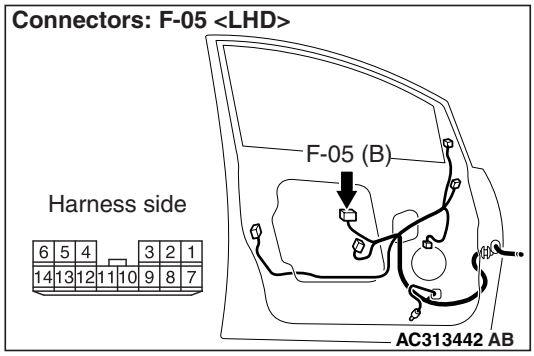

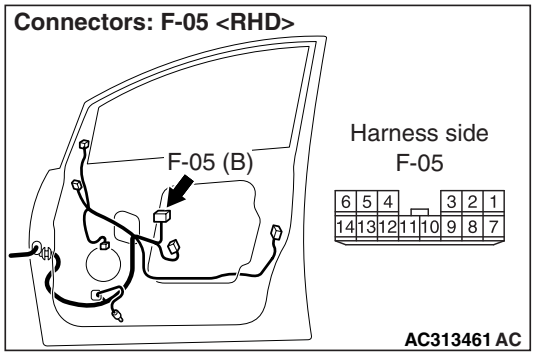

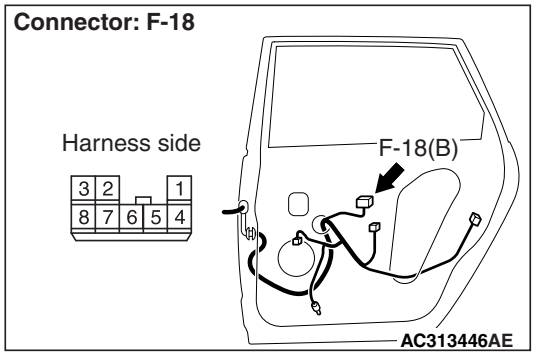

NOTE:

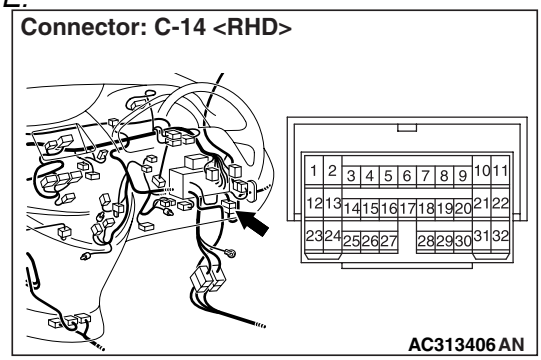

Main Index
Group TOC

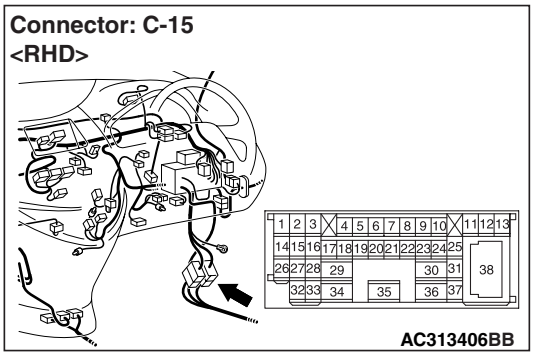

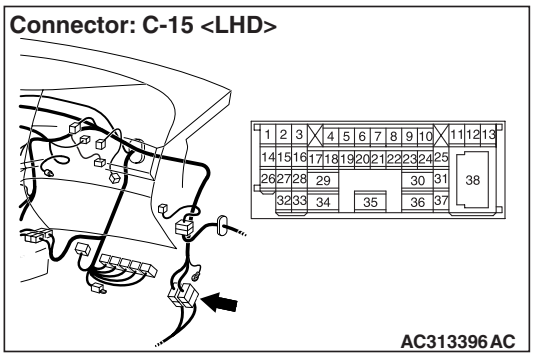

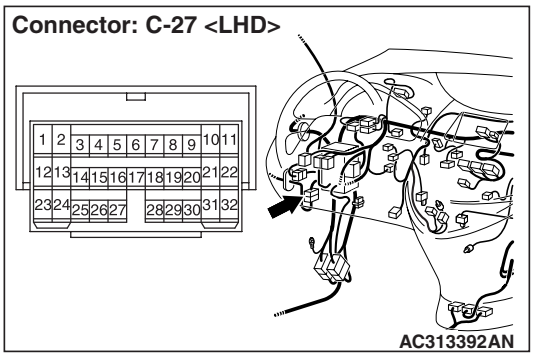

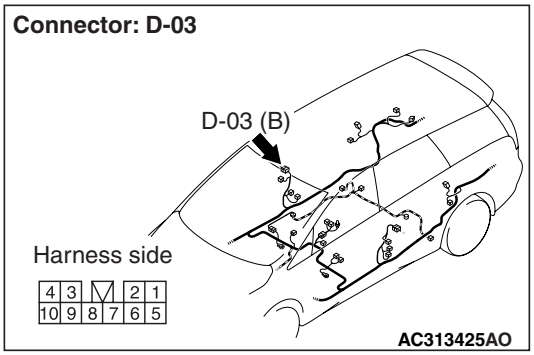

Prior to the wiring harness inspection, check intermediate connectors C-14 <RHD>, C-15, C-27 <LHD>, D-03, and repair if necessary.

- Check the input and output lines for open or short circuit.

Q: Is the check result normal?

YES : The trouble can be an intermittent malfunction (Refer to GROUP 00 – How to Cope with Intermittent Malfunction P.00-5).

NO : Repair the wiring harness.

Step 29. Connector check: F-02 power window sub switch (rear: LH) connector and F-01 power window motor (rear: LH) connector

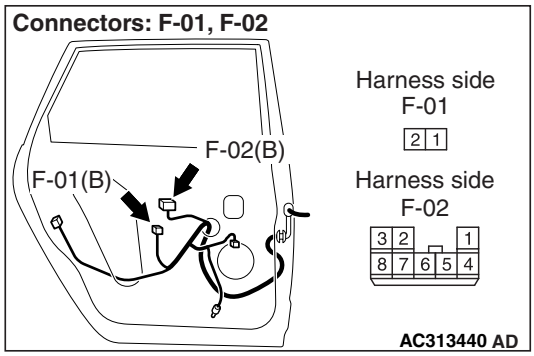

Q: Is the check result normal?

YES : Go to Step 30.

NO : Repair the connector.

Step 30. Check the power window sub switch (rear: LH)

Check that the power window sub switch (rear: LH) works normally. Refer to GROUP 42 – Door P.42-39.

Q: Is the check result normal?

YES : Go to Step 31.

NO : Replace the power window sub switch (rear: LH).

Step 31. Check the power window motor (rear: LH)

Check that the power window motor (rear: LH) works normally. Refer to GROUP 42 – Door P.42-39.

Q: Is the check result normal?

YES : Go to Step 32.

NO : Replace the power window motor (rear: LH).

Step 32. Voltage measurement at F-02 power window sub switch (rear: LH) connector.

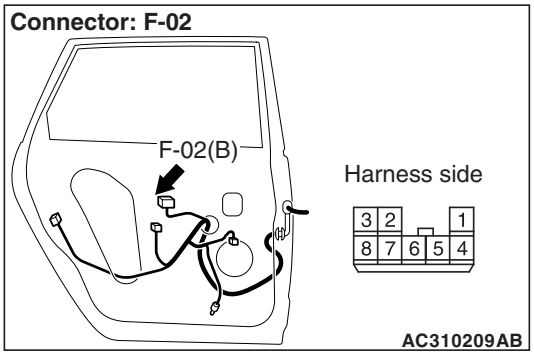

(1) Disconnect the connector, and measure at the wiring harness side.
(2) Turn the ignition switch to the ON position.

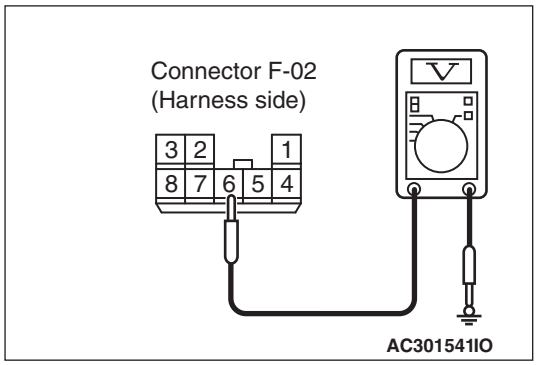

(3) Voltage between terminal 6 and body earth

OK: System voltage

Q: Is the check result normal?
YES : Go to Step 35.
NO : Go to Step 33.

Step 33. C-217 power window relay connector

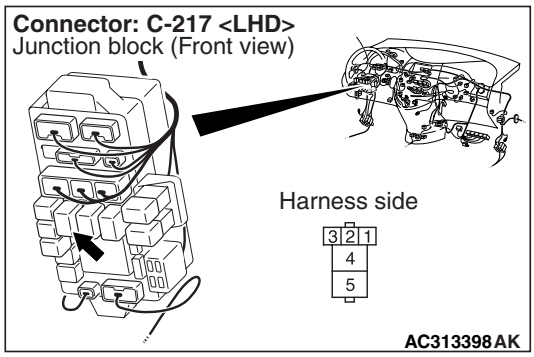

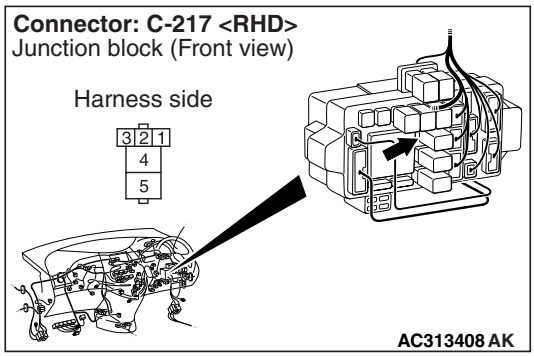

Q: Is the check result normal?
YES : Go to Step 34.
NO : Repair the connector.

Main Index
Group TOC

Step 34. Check the wiring harness from F-02 power window sub switch (rear: LH) connector terminal No.6 to C-217 power window relay connector terminal No.4.

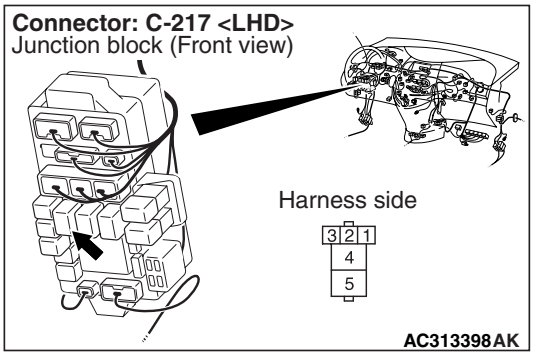

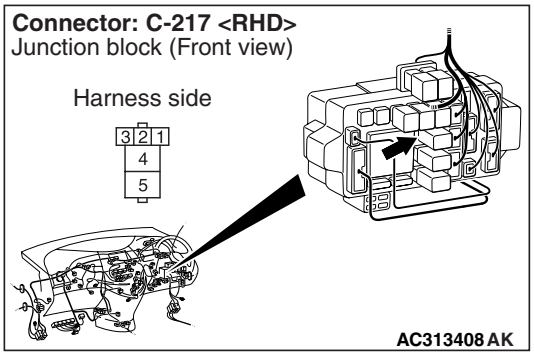

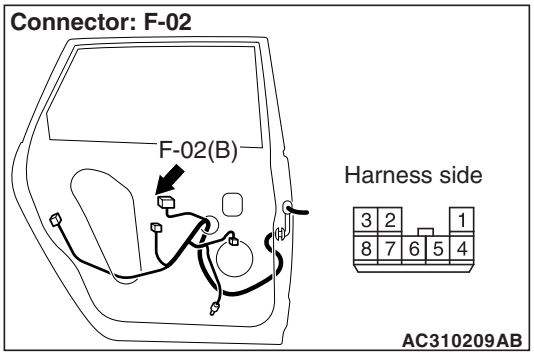

NOTE:

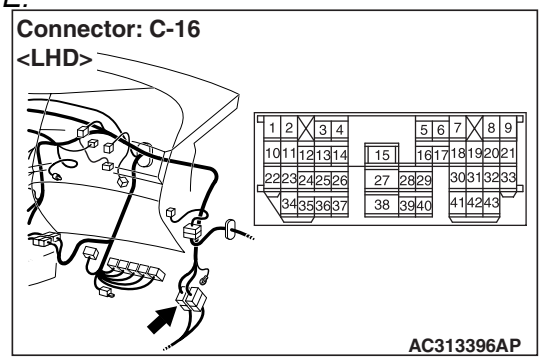

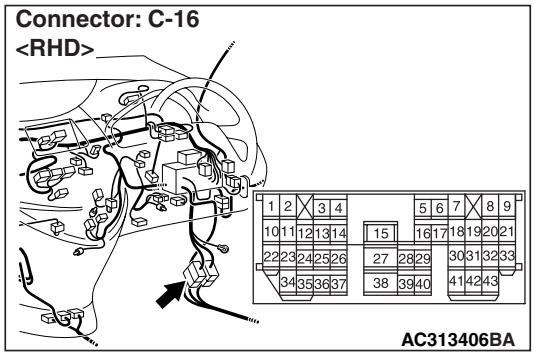

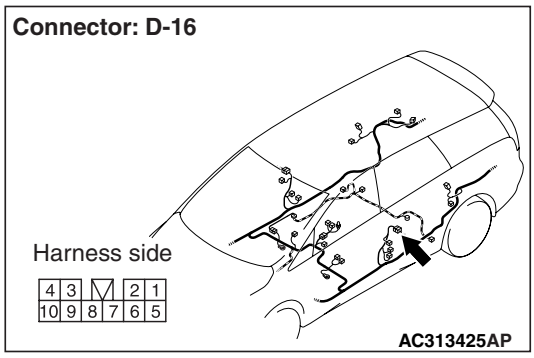

Prior to the wiring harness inspection, check intermediate connectors C-16, D-16 and junction block connector C-202, and repair if necessary.

- Check the power supply line for open circuit.

Q: Is the check result normal?

YES : The trouble can be an intermittent malfunction (Refer to GROUP 00, How to Cope with Intermittent Malfunction P.00-5).

NO : Repair the wiring harness.

Step 35. Check the wiring harness from F-01 power window motor (rear: LH) connector terminal Nos. 1 and 2 to F-02 power window sub switch (rear: LH) connector terminal Nos. 4 and 7.

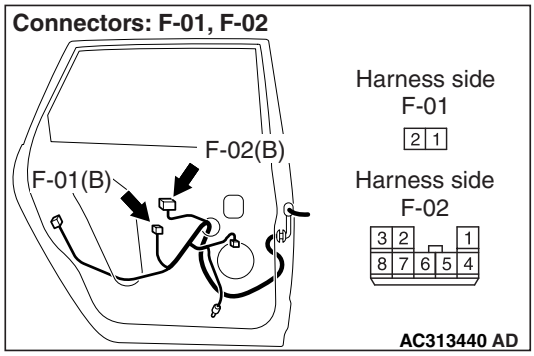

- Check the input and output lines for open or short circuit.

Q: Is the check result normal?

YES : Go to Step 36.

NO : Repair the wiring harness.

Main Index
Group TOC

Step 36. Check the wiring harness from F-05 power window main switch connector terminal Nos. 1 and 3 to F-02 power window sub switch (front: LH) connector terminal Nos. 8 and 5.

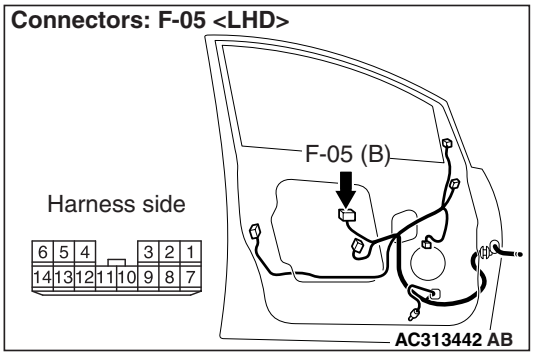

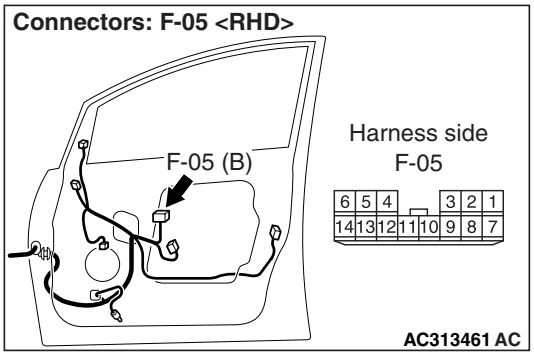

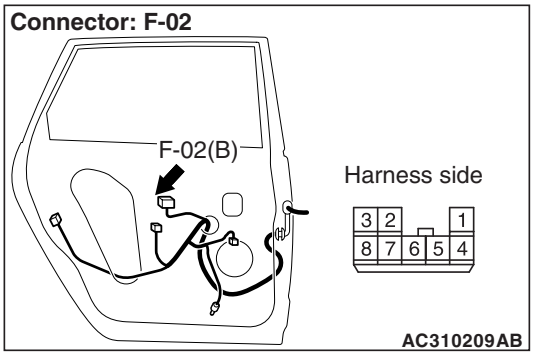

NOTE:

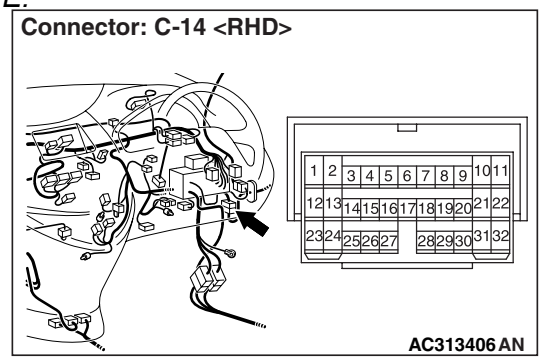

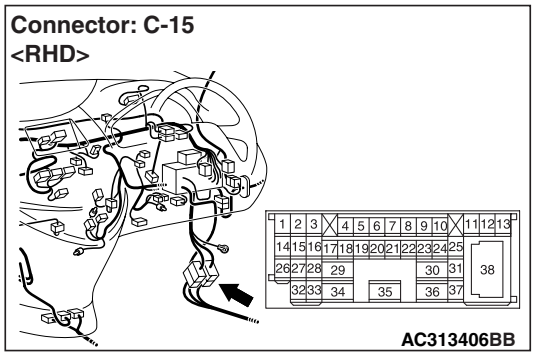

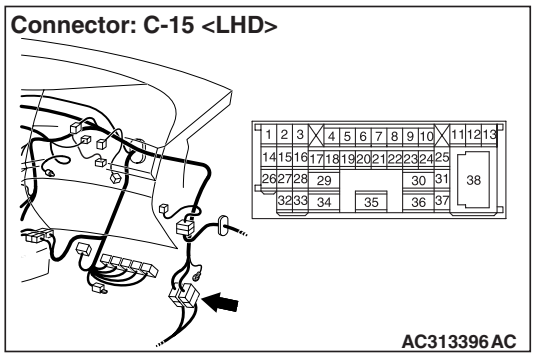

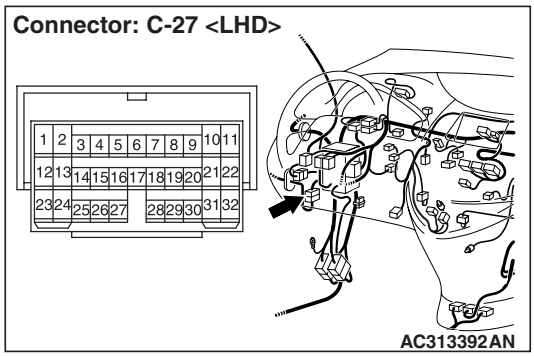

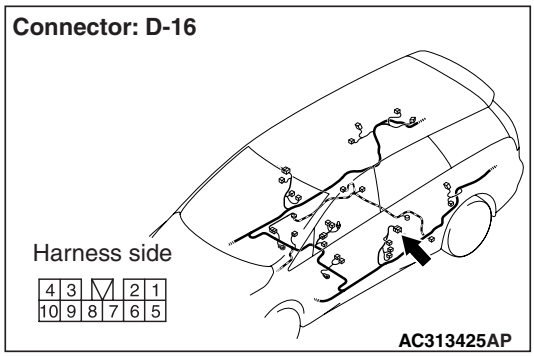

Prior to the wiring harness inspection, check intermediate connectors C-14 <RHD>, C-15, C-27 <LHD>, D-16, and repair if necessary.

- Check the input and output lines for open or short circuit.

Q: Is the check result normal?

YES : The trouble can be an intermittent malfunction (Refer to GROUP 00 – How to Cope with Intermittent Malfunction P.00-5).

NO : Repair the wiring harness.

Main Index
Group TOC

INSPECTION PROCEDURE D-4: Passenger's and/or rear power window(s) do not work by means of the power window main switch.

Power Window (Front: RH) Circuit <LHD>

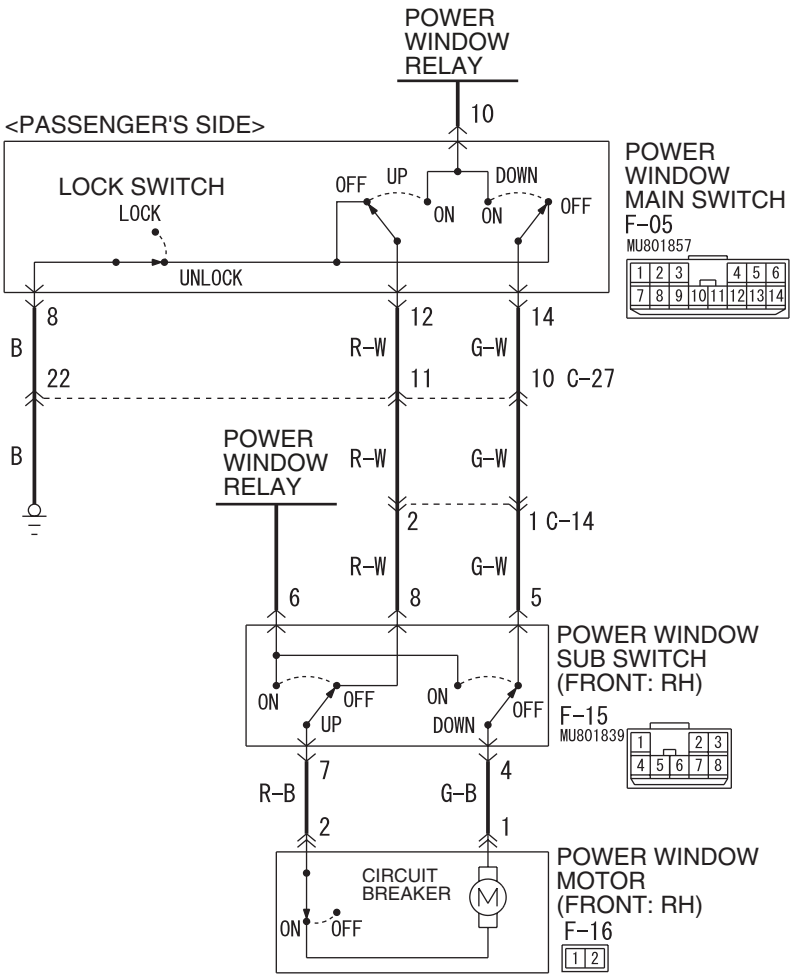

Wire colour code
B : Black LG : Light green G : Green L : Blue W : White Y : Yellow SB : Sky blue
BR : Brown O : Orange GR : Gray R : Red P : Pink V : Violet

W4X54X030A

Main Index
Group TOC

Power Window (Front: RH) Circuit <RHD>

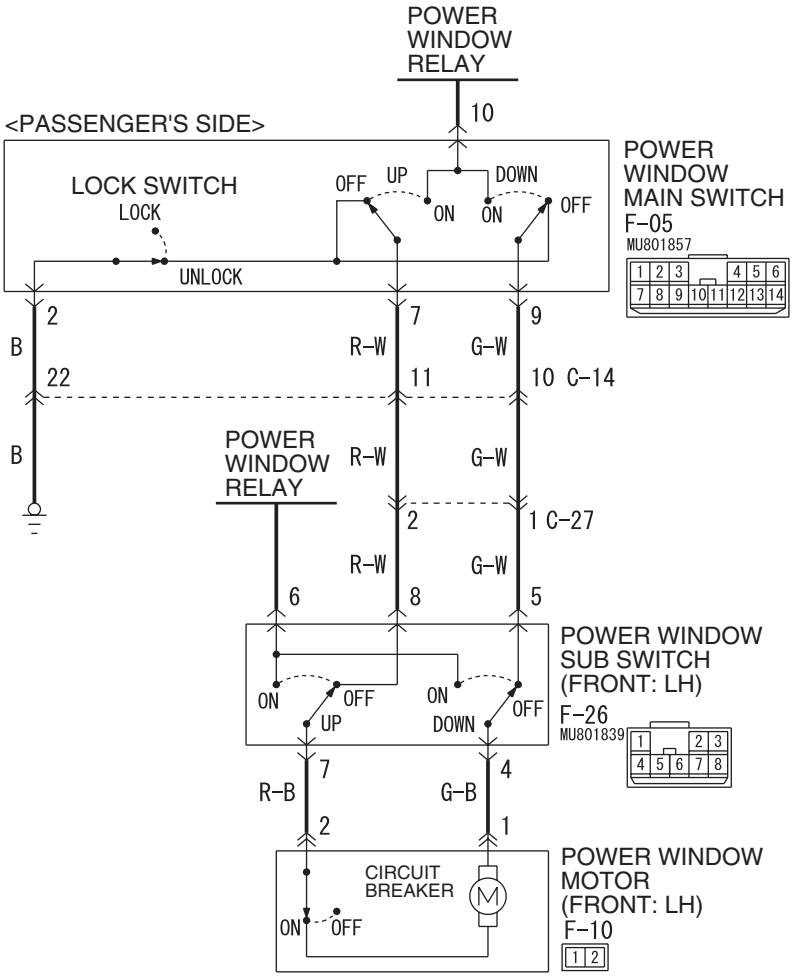

Wire colour code
B : Black LG : Light green G : Green L : Blue W : White Y : Yellow SB : Sky blue
BR : Brown O : Orange GR : Gray R : Red P : Pink V : Violet

W4X54X031A

Main Index
Group TOC

Power Window (Rear) Circuit

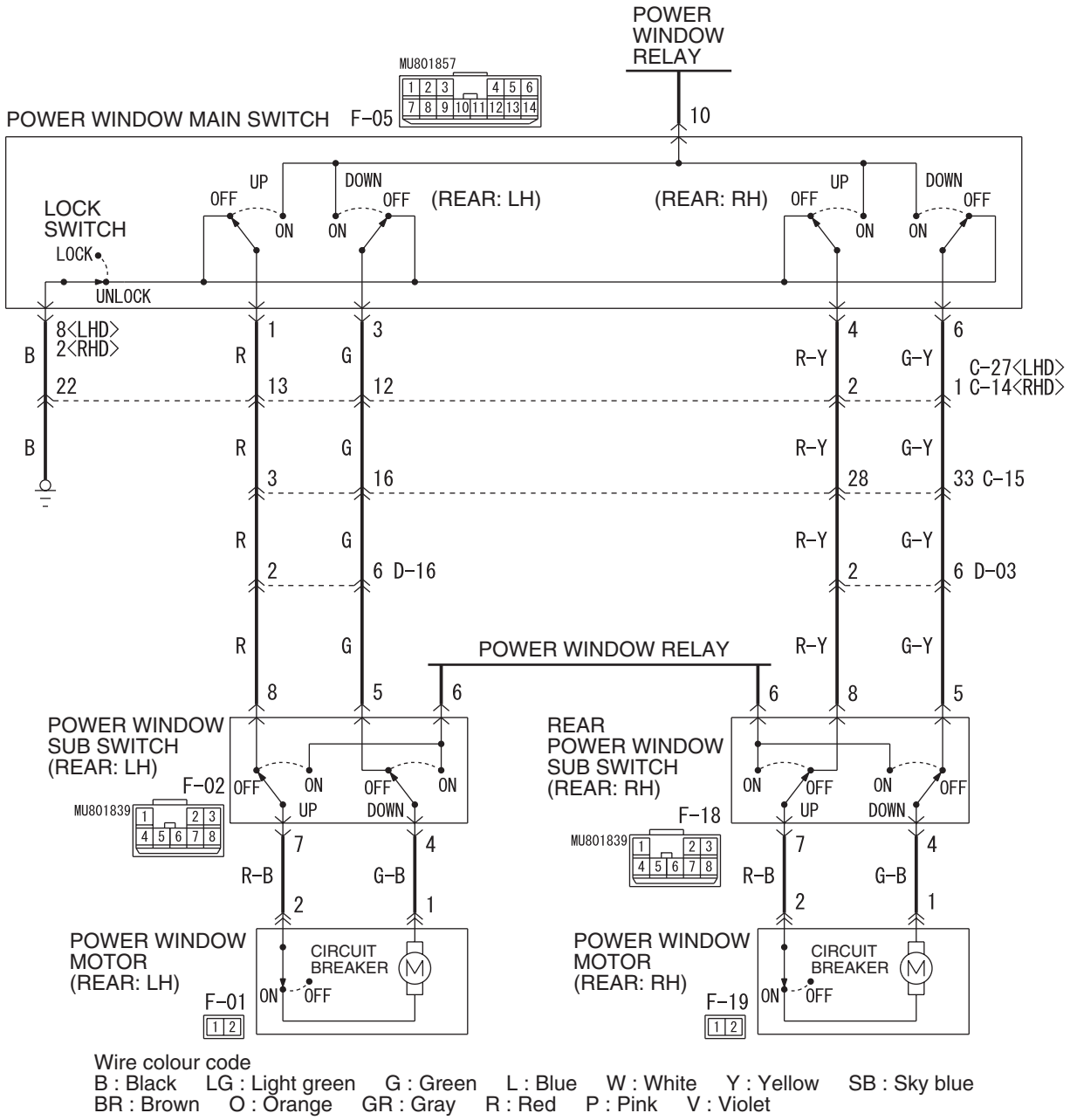

Wire colour code
B : Black LG : Light green G : Green L : Blue W : White Y : Yellow SB : Sky blue
BR : Brown O : Orange GR : Gray R : Red P : Pink V : Violet

W4X54X032A

COMMENTS ON TROUBLE SYMPTOM

If the passenger's and/or rear power window does not work by means of the power window main switch, the power window main switch or the respective power window sub switch(es) may be defective.

POSSIBLE CAUSES <LH DRIVE VEHICLES>

- Malfunction of the power window main switch
- Malfunction of the power window sub switch (front: RH), power window sub switch (rear: RH) or power window sub switch (rear: LH)
- Damaged harness wires and connectors

Main Index
Group TOC

POSSIBLE CAUSES <RH DRIVE VEHICLES>

- Malfunction of the power window main switch
- Malfunction of the power window sub switch (front: LH), power window sub switch (rear: RH) or power window sub switch (rear: LH)
- Damaged harness wires and connectors

DIAGNOSIS PROCEDURE

Step 1. Check the power window main switch.
Check that the driver's power window works by means of the power window main switch.

Q: Is the check result normal?
YES : Go to Step 2.
NO : Refer to inspection procedure D-2 "Driver's power window does not work by means of the power window main switch P.54C-116 <LH drive vehicles> or P.54C-118 <RH drive vehicles>."

Step 2. Check the power window sub switch.
Check that each power window works by means of the respective power window sub switch when the power window lock switch is turned off.

Q: Is the check result normal?
YES : The trouble can be an intermittent malfunction (Refer to GROUP 00 – How to Cope with Intermittent Malfunction P.00-5).
NO : Refer to inspection procedure D-3 "Relevant power window(s) do not work by means of the front and rear passenger's power window sub switches P.54C-120."

INSPECTION PROCEDURE D-5: The window glass lowers automatically while it is rising.

COMMENTS ON TROUBLE SYMPTOM

If the sliding resistance is too great when the window is being raised or the window glass encounters an object, the window glass will lower by approximately 150 mm.

POSSIBLE CAUSES

- Improper adjusted door window glass
- Incorrectly installed or warped glass slider
- Malfunction of the power window motor
- Malfunction of the window regulator

DIAGNOSIS PROCEDURE

Step 1. Check the power window operating current.
Check that the power window operating current is normal (Refer to GROUP 42 – Door – On-vehicle service P.42-31).

Q: Is the check result normal?
YES : Adjust the door window glass (Refer to GROUP 42 – Door – On-vehicle service P.42-29), and then go to Step 2.
NO : Replace the defective power window motor assembly which operating current are abnormal.

Step 2. Check that the door window glasses are installed correctly.
Check that the door window glasses are installed correctly. Refer to GROUP 42 – Door – On-vehicle Service P.42-29.

Q: Is the check result normal?
YES : Go to Step 3.
NO : Adjust the door window glass (Refer to GROUP 42 – Door – On-vehicle service P.42-29).

Step 3. Retest the system.
Check that the power window does not lower automatically while it is being raised.

Q: Is the check result normal?
YES : The trouble can be an intermittent malfunction (Refer to GROUP 00 – How to Cope with Intermittent Malfunction P.00-5).
NO : Replace the power window motor assembly of the defective window.

Main Index
Group TOC

INSPECTION PROCEDURE D-6: The power window timer function does not work normally. <Vehicles for Australia and New Zealand>

⚠ CAUTION
Whenever the ECU is replaced, ensure that the input and output signal circuits are normal.

OPERATION

The ETACS-ECU operates this function in accordance with the input signals below.
- Ignition switch (IG1)
- Driver's door switch
- Passenger's door switch

COMMENTS ON TROUBLE SYMPTOM

If the power window timer function does not work normally, these input signal circuit(s) or the ETACS-ECU may be defective.

POSSIBLE CAUSES

- Malfunction of the driver's door switch
- Malfunction of the passenger's door switch
- Malfunction of the ETACS-ECU
- Damaged harness wires and connectors

DIAGNOSTIC PROCEDURE

Step 1. Check the power window main switch.

Check that all of the front passenger's and rear door power windows can operate by means of the power window main switch.

Q: Is the check result normal?
YES : Go to Step 2.
NO : Refer to Inspection Procedure D-1 "Power windows do not work at all P.54C-106."

Step 2.ECU check by using the SWS monitor

Check that the power supply and earth lines to the ETACS-ECU and the SWS communication lines are normal.
- Turn the ignition switch from the ON to the OFF position.

ECUS TO BE CHECKED
- ETACS ECU

OK: "OK" are displayed for all the items

Q: Is the check result normal?
YES : Go to Step 3.
NO : Refer to Inspection Procedure A-3 "Communication with ETACS-ECU is not possible P.54C-51."

Step 3. SWS monitor data list

Check the SWS communication signal, which are related to the power window timer function.

<Selected item> ETACS ECU
- Ignition switch: OFF
- Driver's door: Close → Open

Item No.	Item name	Normal condition
Item 30	IG SW(IG1)	OFF
Item 32	DR DOOR SW	from OFF to ON

OK: Normal conditions are displayed for all the items

Q: Are the check result normal?
Normal conditions are displayed for all the items. : Go to Step 4.
Normal condition is not displayed for item No.30. : Refer to inspection procedure P-2 "The ignition switch (IG1) signal is not received P.54C-335."
Normal condition is not displayed for item No.32. : Refer to inspection procedure P-5 "The driver's door switch signal is not received P.54C-346 <LH drive vehicles> or P.54C-348 <RH drive vehicles>."

Step 4. ETACS switch data by using the SWS monitor

Check the SWS communication signal, which are related to the power window timer function.
- Passenger's door: Close → Open

Item No.	Item name	Normal condition
Item 05	Passenger's door switch	from OFF to ON

OK: Normal condition is displayed.

Q: Is the check result normal?
YES : Go to Step 5.
NO : Refer to inspection procedure P-12 "All the door switch signals are not received P.54C-373."

Main Index
Group TOC

Step 5. Retest the system.
Check that the power window timer function works normally.

Q: Is the check result normal?
YES : The trouble can be an intermittent malfunction (Refer to GROUP 00, How to Cope with Intermittent Malfunction P.00-5).
NO : Replace the ETACS-ECU.

INSPECTION PROCEDURE D-6: The power window timer function does not work normally. <Except vehicles for Australia and New Zealand>

⚠ CAUTION
Whenever the ECU is replaced, ensure that the input and output signal circuits are normal.

OPERATION

The ETACS-ECU operates this function in accordance with the input signals below.
- Ignition switch (IG1)
- Driver's door switch

COMMENTS ON TROUBLE SYMPTOM

If the power window timer function does not work normally, these input signal circuit(s) or the ETACS-ECU may be defective.

POSSIBLE CAUSES

- Malfunction of the driver’s door switch
- Malfunction of the ETACS-ECU
- Damaged harness wires and connectors

DIAGNOSTIC PROCEDURE

Step 1. Check the power window main switch.
Check that all of the front passenger's and rear door power windows can operate by means of the power window main switch.

Q: Is the check result normal?
YES : Go to Step 2.
NO : Refer to Inspection Procedure D-1 "Power windows do not work at all P.54C-106."

Step 2.ECU check by using the SWS monitor
Check that the power supply and earth lines to the ETACS-ECU and the SWS communication lines are normal.
- Turn the ignition switch from the ON to the OFF position.

ECUS TO BE CHECKED
- ETACS ECU

OK: "OK" are displayed for all the items

Q: Is the check result normal?
YES : Go to Step 3.
NO : Refer to Inspection Procedure A-3 "Communication with ETACS-ECU is not possible P.54C-51."

Step 3. SWS monitor data list
Check the SWS communication signal, which are related to the power window timer function.

<Selected item> ETACS ECU
- Ignition switch: OFF
- Driver's door: Close → Open

Item No.	Item name	Normal condition
Item 30	IG SW(IG1)	OFF
Item 32	DR DOOR SW	from OFF to ON

OK: Normal conditions are displayed for all the items

Q: Are the check result normal?
Normal conditions are displayed for all the items. : Go to Step 4.
Normal condition is not displayed for item No.30. : Refer to inspection procedure P-2 "The ignition switch (IG1) signal is not received P.54C-335."
Normal condition is not displayed for item No.32. : Refer to inspection procedure P-5 "The driver's door switch signal is not received P.54C-346 <LH drive vehicles> or P.54C-348 <RH drive vehicles>."

Step 4. Retest the system.
Check that the power window timer function works normally.

Q: Is the check result normal?
YES : The trouble can be an intermittent malfunction (Refer to GROUP 00, How to Cope with Intermittent Malfunction P.00-5).
NO : Replace the ETACS-ECU.

Main Index
Group TOC

KEYLESS ENTRY SYSTEM

INSPECTION PROCEDURE E-1: Keyless entry system does not work.

⚠ CAUTION
Whenever the ECU is replaced, ensure that the input and output signal circuits are normal.

Keyless Entry System Function Circuit

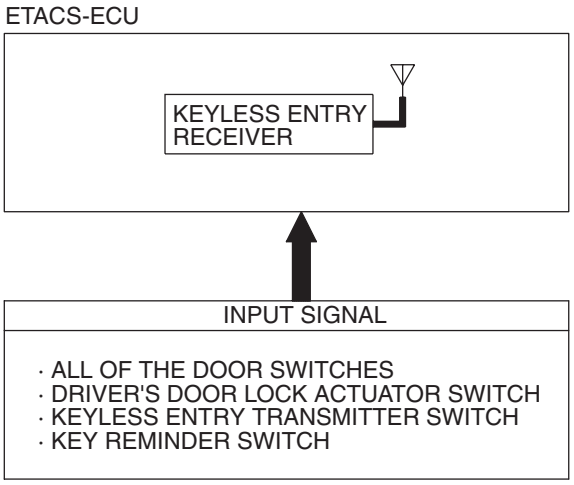

W3Z16E04AA

COMMENTS ON TROUBLE SYMPTOM

If the keyless entry system does not work normally, the input signal circuits to the components below or the ETACS-ECU may be defective.

- Key reminder switch
- All of the door switches
- Keyless entry transmitter
- Driver's door lock actuator

POSSIBLE CAUSES

- Malfunction of the key reminder switch
- Malfunction of the door switches
- Malfunction of the keyless entry transmitter
- Malfunction of the driver's door lock actuator
- Malfunction of the ETACS-ECU
- Damaged harness wires and connectors

DIAGNOSIS PROCEDURE

Step 1. Check the operation of the central door locking system.

Check that the central door locking system works normally.

Q: Is the check result normal?

YES : Go to Step 2

NO : Refer to Inspection Procedure C-1 "Central door locking system does not work P.54C-81."

Main Index
Group TOC

Step 2. ECU check by using the SWS monitor.
Check that the power supply and earth lines to the ETACS-ECU and the SWS communication lines are normal.
- Ignition switch: OFF

ECUS TO BE CHECKED
- ETACS ECU

OK: "OK" is displayed on the "ETACS ECU" menu.

Q: Is the check result normal?
YES : Go to Step 3.
NO : Refer to Inspection Procedure A-3 "Communication with ETACS-ECU is not possible P.54C-51."

Step 3. Use the SWS monitor to examine the keyless entry system for signal reception.
Check the condition of the keyless entry transmitter.

Operation switch	Normal conditions (received signal)
LOCK	LOCK switch signal
UNLOCK	UNLOCK switch signal

OK: By operating the switch as shown in the table above, relevant normal conditions are displayed.

Q: Are normal condition displayed?
YES : Go to Step 4.
NO : Refer to Inspection Procedure P-21 "Each switch signal of the keyless entry transmitter is not received P.54C-420."

Step 4. SWS monitor data list.
Check the SWS communication input signal, which are related to the keyless entry system.

<Selected item> ETACS
- Driver's door: Lock → Unlock

Item No.	Item name	Normal condition
Item 32	DR DOR SW	from OFF to ON

OK: Normal condition is displayed.

Q: Is normal condition displayed?
YES : . Go to Step 5.
NO : . Refer to inspection procedure P-5 "The driver's door switch signal is not received <LH drive vehicles>P.54C-346 or <RH drive vehicles>P.54C-348 ."

Step 5. ETACS switch data by using the SWS monitor.
Check the ETACS-ECU signal related to the keyless entry system.
- Ignition switch: OFF (key inserted)
- Doors other than the driver's door (including the tailgate): Closed to open

Item No.	Item name	Normal condition
Item 03	Key reminder switch	OFF
Item 05	Passenger's door switch	from OFF to ON
Item 07	Trunk or lift gate switch	from OFF to ON
Item 41	Rear door (right side) switch	from OFF to ON
Item 42	Rear door (left side) switch	from OFF to ON

OK: Normal conditions are displayed for all the items.

Q: Are the check result normal?
Normal conditions displayed for all the items : Go to Step 6.
Normal condition is not displayed for item No.03. : Refer to inspection procedure P-10 "The key reminder switch signal is not received P.54C-364."
Normal condition is not displayed for item 05, 07, 41 or 42. : Refer to inspection procedure P-12 "All the door switch signals are not received P.54C-373."

Step 6. Retest the system.
Check the keyless entry system works normally.

Q: Is the check result normal?
YES : The trouble can be an intermittent malfunction (Refer to GROUP 00 – How to Cope with Intermittent Malfunction P.00-5).
NO : Replace the ETACS-ECU.

Main Index
Group TOC

INSPECTION PROCEDURE E-2: Keyless entry hazard lamp answerback function or the room lamp answerback function does not work normally.

⚠ CAUTION
Whenever the ECU is replaced, ensure that the input and output signal circuits are normal.

COMMENTS ON TROUBLE SYMPTOM

If the hazard warning lamp and the room lamp work normally, the ETACS-ECU may be defective. Alternatively, it is possible that the keyless entry hazard lamp answerback function was disabled by the customize function.

POSSIBLE CAUSES

- Defective turn-signal lamp
- Malfunction of the room lamp
- Malfunction of the ETACS-ECU
- Damaged harness wires and connectors

DIAGNOSIS PROCEDURE

Step 1. Check the operation of the hazard warning lamp.
Check that the hazard warning lamps illuminate normally.

Q: Is the check result normal?
YES : Go to Step 2.
NO : Refer to inspection procedure P-11 "The hazard warning lamp switch signal is not received P.54C-368".

Step 2. Check the operation of the room lamps.
Check that the room lamps illuminate normally.

Q: Is the check result normal?
YES : Go to Step 3.
NO : Refer to inspection procedure O-2 "The room lamp does not illuminate normally P.54C-274 <Vehicles with keyless entry> or P.54C-281 <Vehicles without keyless entry>."

Step 3. Check the operation of the keyless entry system.
If the keyless entry system is operated, check that the doors can be locked and unlocked normally.

Q: Is the check result normal?
YES : Go to Step 4.
NO : Refer to inspection procedure E-1 "Keyless entry system does not work P.54C-142."

Step 4. Customize function by using the SWS monitor.
Check that "Hazard answer-back operation" is set to other than "NO BLINK" by using the SWS monitor customisation function.

- LOCK:1/UNLOCK:2
- LOCK:1/UNLOCK:0
- LOCK:0/UNLOCK:2
- LOCK:2/UNLOCK:1
- LOCK:2/UNLOCK:0
- LOCK:0/UNLOCK:1

Q: Is the check result normal?
YES : Go to Step 5.
NO : Set "Hazard answer-back operation" to other than "Without function" by using the SWS monitor customisation function (Refer to P.54C-432).

Step 5. ECU check by using the SWS monitor
Check that the power supply and earth lines to the ETACS-ECU and the SWS communication lines are normal.

- Ignition switch: OFF

ECU TO BE CHECKED

- ETACS ECU

OK: "OK" is displayed on the "ETACS ECU" menu.

Q: Is the check result normal?
YES : Go to Step 6.
NO : Refer to Inspection Procedure A-3 "Communication with ETACS-ECU is not possible P.54C-51."

Step 6. Retest the system.
Check that the keyless entry hazard lamp answerback function or the room lamp answerback function work normally.

Q: Is the check result normal?
YES : The trouble can be an intermittent malfunction (Refer to GROUP 00 – How to Cope with Intermittent Malfunction P.00-5).
NO : Replace the ETACS-ECU.

Main Index
Group TOC

INSPECTION PROCEDURE E-3: Encrypted code cannot be registered.

⚠ CAUTION
Whenever the ECU is replaced, ensure that the input and output signal circuits are normal.

Encrypted Transmitter Code Register Mode

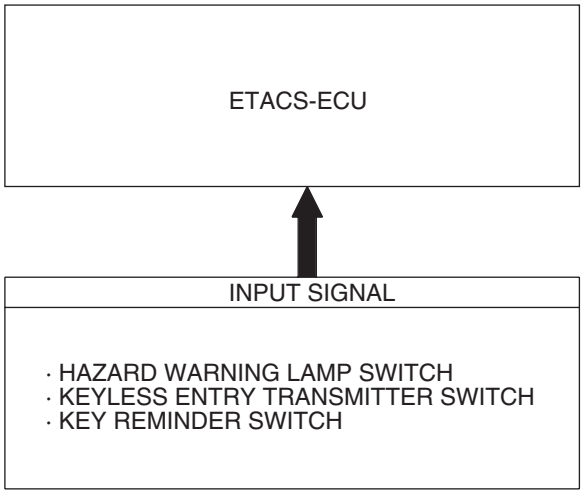

W4X54E164A

COMMENTS ON TROUBLE SYMPTOM

If the encrypted code registration mode is not entered, the key reminder switch, the hazard warning lamp switch or the ETACS-ECU may be defective.
If the registration is not possible although the registration mode is entered, the keyless entry transmitter or the ETACS-ECU may be defective.

POSSIBLE CAUSES

- Malfunction of the keyless entry transmitter
- Malfunction of the ETACS-ECU
- Damaged harness wires and connectors

DIAGNOSIS PROCEDURE

Step 1. Check the encrypted code registration mode.
Check that the encrypted code registration mode is entered.

Q: Is the check result normal?
YES : Go to Step 3.
NO : Go to Step 2.

Step 2. ETACS switch data by using the SWS monitor.
Check the relevant ETACS-ECU signal before entering the encrypted code registration mode.

- Ignition switch: OFF (key inserted)
- Hazard lamp switch: ON

Item No.	Item name	Normal condition
Item 03	Key reminder switch	OFF
Item 04	Hazard lamp switch	ON (only when switch is operated)

OK: Normal conditions are displayed for all the items.

Main Index
Group TOC

Q: Are the check result normal?

Normal conditions displayed for all the items : Go to Step 3.

Normal condition is not displayed for item No.03. : Refer to inspection procedure P-10 "The key reminder switch signal is not received P.54C-364."

Normal condition is not displayed for item No.04. : Refer to inspection procedure P-11 "The hazard warning lamp switch signal is not received P.54C-368."

Step 3. Use the SWS monitor to examine the keyless entry system for signal reception.

Check the condition of the keyless entry transmitter.

Operation switch	Normal conditions (received signal)
LOCK	LOCK switch signal
UNLOCK	UNLOCK switch signal

OK: By operating the switch as shown in the table above, relevant normal conditions are displayed.

Q: Are the check result normal?

YES : Go to Step 4.

NO : Refer to Inspection Procedure P-21 "Each switch signal of the keyless entry transmitter is not received P.54C-420."

Step 4. Retest the system.

Check that the encrypted code can be registered.

Q: Is the check result normal?

YES : The trouble can be an intermittent malfunction (Refer to GROUP 00 – How to Cope with Intermittent Malfunction P.00-5).

NO : Replace the ETACS-ECU.

INSPECTION PROCEDURE E-4: The timer lock function does not work after the doors have been unlocked by the keyless entry system.

⚠ CAUTION

Whenever the ECU is replaced, ensure that the input and output signal circuits are normal.

COMMENT ON TROUBLE SYMPTOM

If the keyless entry timer lock does not work normally, the input signal circuit(s) to the keyless entry transmitter or the ETACS-ECU may be defective.

POSSIBLE CAUSES

- Malfunction of the keyless entry transmitter
- Malfunction of the ETACS-ECU
- Damaged harness wires and connectors

DIAGNOSIS PROCEDURE

Step 1. Check the operation of the keyless entry system.

Check that the keyless entry system works normally.

Q: Is the check result normal?

YES : Go to Step 2.

NO : Refer to inspection procedure E-1 "Keyless entry system does not work P.54C-142."

Step 2. Customize function by using the SWS monitor.

"Timer relock after unlocking" is set to one of the following by using SWS monitor customisation function. Check that the timer lock is activated according to the setting.

- 30sec.
- 60sec.
- 120sec.
- 180sec.

Q: Is the check result normal?

YES : The trouble can be an intermittent malfunction (Refer to GROUP 00 – How to Cope with Intermittent Malfunction P.00-5).

NO : Replace the ETACS-ECU.

INSPECTION PROCEDURE E-5: Multimode keyless entry system function does not work at all.

⚠ CAUTION
Whenever the ECU is replaced, ensure that the input and output signal circuits are normal.

COMMENTS ON TROUBLE SYMPTOM

If the electric-folding door mirrors work normally, the ETACS-ECU may be defective.

POSSIBLE CAUSES

- Malfunction of the keyless entry transmitter
- Malfunction of the ETACS-ECU

DIAGNOSIS PROCEDURE

Step 1. Check the operation of the electric folding outside rear-view mirrors.
Check that the electric folding outside rear-view mirrors operate normally by using the remote controlled mirror switch (folding/unfolding switch).

Q: Is the check result normal?
YES : Go to Step 2
NO : Refer to Inspection Procedure I-1 "Electric retractable remote controlled door mirror does not work at all. P.54C-195."

Step 2. Check the keyless entry transmitter.
Check that the keyless entry system works normally.

Q: Is the check result normal?
YES : Go to Step 3
NO : Refer to Inspection Procedure E-1 "Keyless Entry System does not Work P.54C-142."

Step 3. ECU check by using the SWS monitor.
Check that the power supply and earth lines to the ETACS-ECU and the SWS communication lines are normal.

- Ignition switch: OFF
- Operate the multimode function with the keyless entry transmitter.

ECU TO BE CHECKED

- ETACS ECU

OK: "OK" is displayed on the "ETACS ECU" menu.

Q: Is the check result normal?
YES : Go to Step 4.
NO : Refer to Inspection Procedure A-3 "Communication with ETACS-ECU is not possible P.54C-51."

Step 4. Use the SWS monitor to examine the keyless entry system for signal reception.
Check the condition of the keyless entry transmitter.

Operation switch	Normal conditions (received signal)
LOCK (1 second or more)	LOCK switch signal
	LOCK switch long push signal
UNLOCK (1 second or more)	UNLOCK switch signal
	UNLOCK switch long push signal

OK: By operating the switch as shown in the table above, relevant normal conditions are displayed.

Q: Are the check result normal?
YES : Go to Step 5.
NO : Refer to inspection procedure P-21 "Each switch signal of the keyless entry transmitter is not received P.54C-420."

Step 5. SWS monitor data list.
Check the SWS communication signal, which is related to the multi-mode keyless entry system.

<Selected item> ETACS

- Ignition switch: OFF
- Operate the multi-mode function with the keyless entry transmitter.

Item No.	Item name	Normal condition
Item 30	IGNITION SW IG1	OFF
Item 34	KEYLESS ENTRY	MULTI CLOSE, MULTI OPEN or MULTI STOP

OK: Normal conditions displayed for all the items

Q: Are the check result normal?
Normal conditions are displayed for all the items. : Go to Step 6.
Normal condition is not displayed for item No.30 : Refer to inspection procedure P-2 "The ignition switch (IG1) signal is not received P.54C-335."
Normal condition is not displayed for item No.34 : Replace the ETACS-ECU.

Main Index
Group TOC

Step 6. Retest the system.
Check that the multi-mode keyless entry system works normally.

Q: Is the check result normal?
YES : The trouble can be an intermittent malfunction (Refer to GROUP 00 – How to Cope with Intermittent Malfunction P.00-5).
NO : Replace the power window main switch.

SUNROOF

INSPECTION PROCEDURE F-1: The sunroof does not work at all.

⚠ CAUTION
Whenever the ECU is replaced, ensure that the input and output signal circuits are normal.

Sunroof Motor Assembly Power Supply Circuit

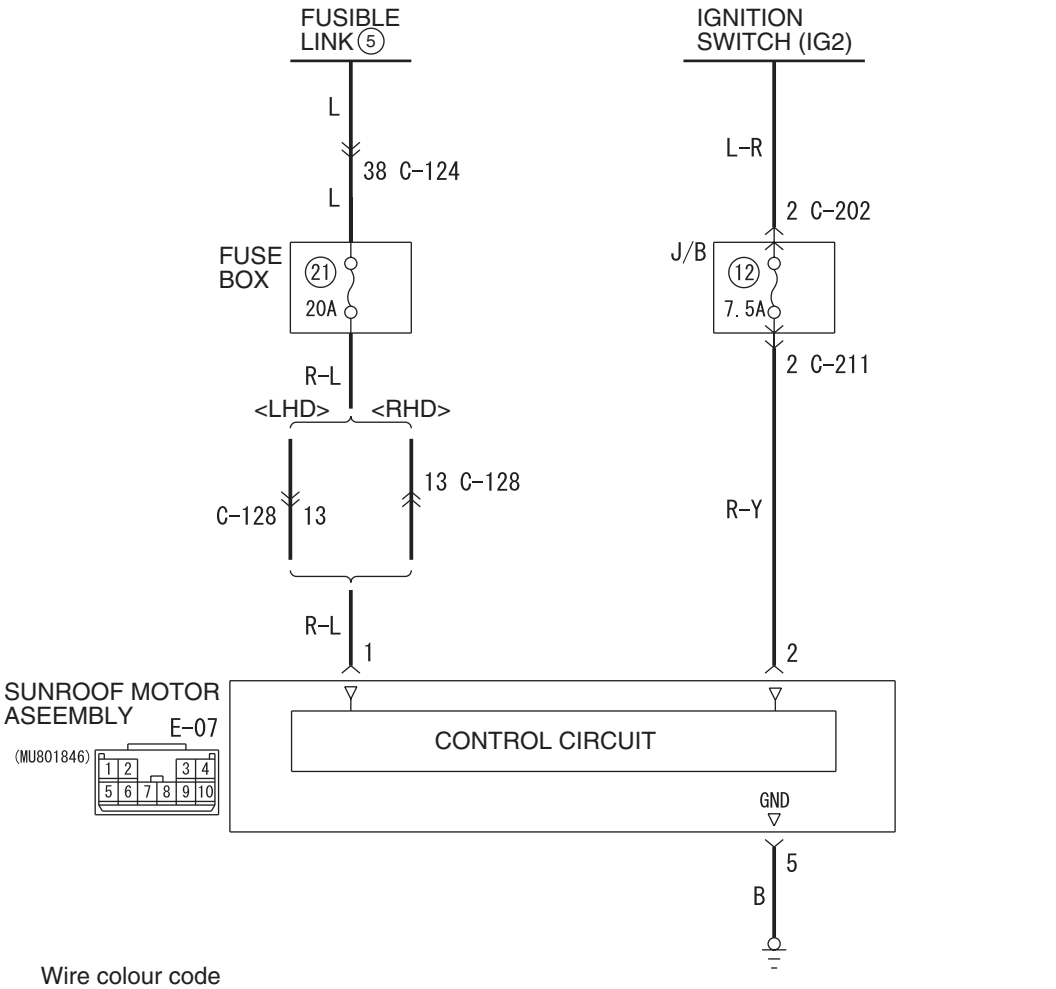

Wire colour code
B : Black LG : Light green G : Green L : Blue W : White Y : Yellow SB : Sky blue
BR : Brown O : Orange GR : Gray R : Red P : Pink V : Violet

W4X54E107A

Main Index
Group TOC

COMMENTS ON TROUBLE SYMPTOM

If the sunroof does not work at all, these power supply circuit(s), these earth circuit(s), sunroof switch or the sunroof motor assembly (sunroof ECU) may be defective.

POSSIBLE CAUSES

- Malfunction of the sunroof switch
- Malfunction of the sunroof motor assembly (sunroof ECU)
- Malfunction of the power window main switch
- Damaged harness wires and connectors

DIAGNOSTIC PROCEDURE

Step 1. Check the power window main switch.
Check that the power window lock switch is turned off.

Q: Is the check result normal?
YES : Go to Step 2.
NO : Turn off the power window lock switch.

Step 2. ECU check on the SWS monitor.
Check that the power supply and earth lines to the sunroof motor assembly (sunroof-ECU) and the ETACS-ECU and the SWS communication lines are normal.

- Ignition switch: ON
- Operate the sunroof switch.

ECUS TO BE CHECKED

- ETACS ECU
- SUNROOF ECU

OK: "OK" are displayed for all the items.

Q: Are the check result normal?
"OK" are displayed for all the items : Go to Step 3.
"NG" is displayed on the "ETACS ECU" menu. : Refer to Inspection Procedure A-3 "Communication with ETACS-ECU is not possible P.54C-51."
"NG" is displayed on the "SUNROOF ECU" menu. : Refer to Inspection Procedure A-5 "Communication with sunroof motor assembly (sunroof-ECU) is not possible P.54C-63."

Step 3. Check the power window main switch.
Check that all of the front passenger's and rear door power windows can operate by means of the power window main switch.

Q: Is the check result normal?
YES : Go to Step 4.
NO : Refer to Inspection Procedure D-1 "Power windows do not work at all P.54C-106."

Step 4. Function diagnosis by using the SWS monitor
Check the SWS communication signal, which are related to the sunroof.

<Selected item> SUNROOF OPE

- Ignition switch: ON

Item No.	Item name	Normal condition
Item 30	IG SW(IG1)	ON
Item 72	S/R ECU ACK	INPUT CHECK (only momentarily when switch is operated)

OK: Normal conditions are displayed for all the items.

Q: Are the check result normal?
Normal conditions are displayed for all the items. : Go to Step 5.
Normal condition is not displayed for item No.30 : Refer to inspection procedure P-2 "The ignition switch (IG1) signal is not received P.54C-335."
Normal condition is not displayed for item No.72 : Refer to inspection procedure P-9 When the sunroof switch is operated, the switch signal are not received P.54C-359."

Step 5. Retest the system.
The sunroof assembly should now work normally.

Q: Is the check result normal?
YES : The trouble can be an intermittent malfunction (Refer to GROUP 00 – How to Cope with Intermittent Malfunction P.00-5).
NO : Replace the sunroof motor assembly.

Main Index
Group TOC

INSPECTION PROCEDURE F-2: Any of the sunroof switch positions is defective.

⚠ CAUTION
Whenever the ECU is replaced, ensure that the input and output signal circuits are normal.

Sunroof Switch Circuit

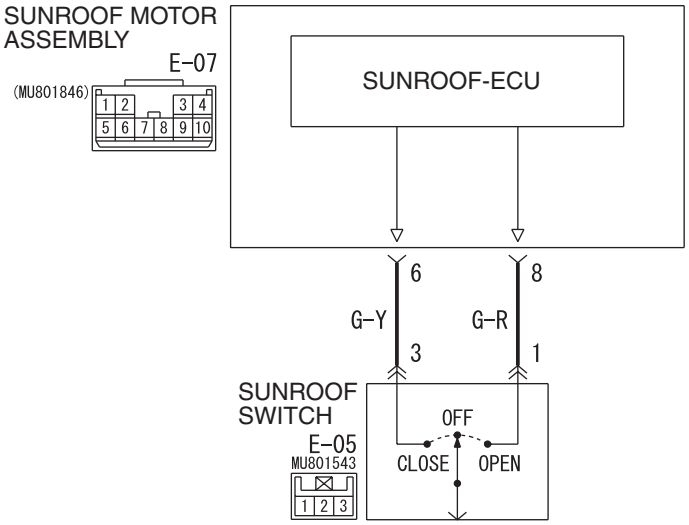

Wire colour code
B : Black LG : Light green G : Green L : Blue W : White Y : Yellow SB : Sky blue
BR : Brown O : Orange GR : Gray R : Red P : Pink V : Violet

W4X54E106A

COMMENTS ON TROUBLE SYMPTOM

If any of the sunroof switch positions is defective, the communication line between the sunroof switch and the sunroof motor assembly (sunroof-ECU) may be defective.

POSSIBLE CAUSES

- Malfunction of the sunroof switch
- Malfunction of the sunroof motor assembly (sunroof-ECU)
- Damaged harness wires and connectors

DIAGNOSTIC PROCEDURE

Step 1. SWS monitor data list.
Check the SWS communication signal, which are related to the sunroof.

<Selected item> Front ECU·P/W·S/R
- Ignition switch: ON
- Operate the sunroof switch.

Item No.	Item name	Normal condition
Item 72	S/R ECU ACK	INPUT CHECK (only momentarily when switch is operated)

OK: Normal condition is displayed.

Q: Is the check result normal?
YES : Replace the sunroof motor assembly.
NO : Refer to inspection procedure P-9 "When the sunroof switch is operated, the switch signal are not received P.54C-359."

Main Index
Group TOC

INSPECTION PROCEDURE F-3: Sunroof timer function does not work normally. <Vehicles for Australia and New Zealand>

⚠ CAUTION

Whenever the ECU is replaced, ensure that the input and output signal circuits are normal.

Sunroof Timer Function

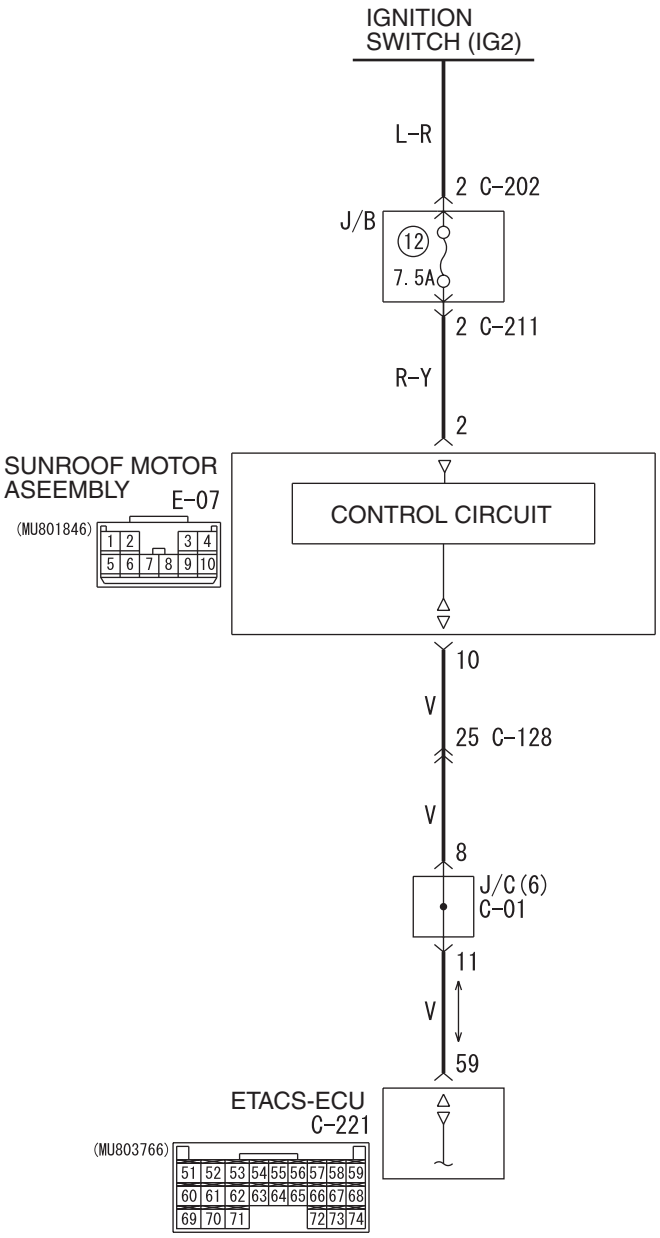

Wire colour code
B : Black LG : Light green G : Green L : Blue W : White Y : Yellow SB : Sky blue
BR : Brown O : Orange GR : Gray R : Red P : Pink V : Violet

W6X54X093A

Main Index
Group TOC

COMMENTS ON TROUBLE SYMPTOM

If the sunroof timer function does not work, the input circuit from the ignition switch (IG1), the driver's door switch, or the passenger's door switch, the communication lines between the ETACS-ECU and the sunroof motor assembly (sunroof-ECU), the sunroof motor assembly (sunroof-ECU) or the ETACS-ECU may be defective.

POSSIBLE CAUSES

- Malfunction of the driver's door switch
- Malfunction of the passenger's door switch
- Malfunction of ETACS-ECU
- Malfunction of the sunroof motor assembly (sunroof-ECU)
- Damaged harness wires and connectors

DIAGNOSTIC PROCEDURE

Step 1. Check the operation condition of the sunroof.

Check that the sunroof works normally.

Q: Is the check result normal?

YES : Go to Step 2.

NO : Refer to Inspection Procedure F-1 "The sunroof does not work at all P.54C-148."

Step 2. ECU check on the SWS monitor.

Check that the power supply and earth lines to the sunroof motor assembly (sunroof-ECU) and the ETACS-ECU and the SWS communication lines are normal.

- Ignition switch: OFF
- Operate the sunroof switch.

NOTE: Operate the sunroof switch within the timer period after the ignition switch is turned off.

ECUS TO BE CHECKED

- ETACS ECU
- SUNROOF ECU

OK: "OK" are displayed for all the items

Q: Are the check result normal?

"OK" are displayed for all the items : Go to Step 3.

"NG" is displayed on the "ETACS ECU" menu. : Refer to Inspection Procedure A-3 "Communication with ETACS-ECU is not possible P.54C-51."

"NG" is displayed on the "SUNROOF ECU" menu. : Refer to Inspection Procedure A-5 "Communication with sunroof motor assembly (sunroof-ECU) is not possible P.54C-63."

Step 3. Function diagnosis by using the SWS monitor.

Check the SWS communication signal, which are related to the sunroof.

<Selected item> SUNROOF OPE

- Ignition switch: ON

Item No.	Item name	Normal condition
Item 72	S/R ECU ACK	INPUT CHECK (only momentarily when switch is operated)

OK: Normal condition is displayed.

Q: Is the check result normal?

YES : Go to Step 4.

NO : Replace the sunroof motor assembly.

Step 4. SWS monitor data list

Check the SWS communication signal, which are related to the sunroof timer function.

<Selected item> ETACS ECU

- Ignition switch: OFF
- Driver's door: Close → Open

Item No.	Item name	Normal condition
Item 30	IG SW(IG1)	OFF
Item 32	DR DOOR SW	from OFF to ON

OK: Normal conditions are displayed for all the items

Q: Are the check result normal?

Normal conditions are displayed for all the items. : Go to Step 5.

Normal condition is not displayed for item No.30. : Refer to inspection procedure P-2 "The ignition switch (IG1) signal is not received P.54C-335."

Normal condition is not displayed for item No.32. : Refer to inspection procedure P-5 "The driver's door switch signal is not received P.54C-348 <RH drive vehicles>."

Main Index
Group TOC

Step 5. ETACS switch data by using the SWS monitor

Check the SWS communication signal, which are related to the sunroof timer function.

- Passenger's door: Close → Open

Item No.	Item name	Normal condition
Item 05	Passenger's door switch	from OFF to ON

OK: Normal condition is displayed.

Q: Is the check result normal?

YES : Go to Step 6.

NO : Refer to inspection procedure P-12 "All the door switch signals are not received P.54C-373."

Step 6. Retest the system.

After the sunroof motor assembly is replaced, check that the sunroof timer function works normally.

(1) Replace the sunroof motor assembly.

(2) Check that the sunroof timer function works normally.

Q: Is the check result normal?

YES : The trouble can be an intermittent malfunction (Refer to GROUP 00 – How to Cope with Intermittent Malfunction P.00-5).

NO : Replace the ETACS-ECU.

Main Index
Group TOC

INSPECTION PROCEDURE F-3: Sunroof timer function does not work normally. <Except vehicles for Australia and New Zealand>

⚠ CAUTION

Whenever the ECU is replaced, ensure that the input and output signal circuits are normal.

Sunroof Timer Function

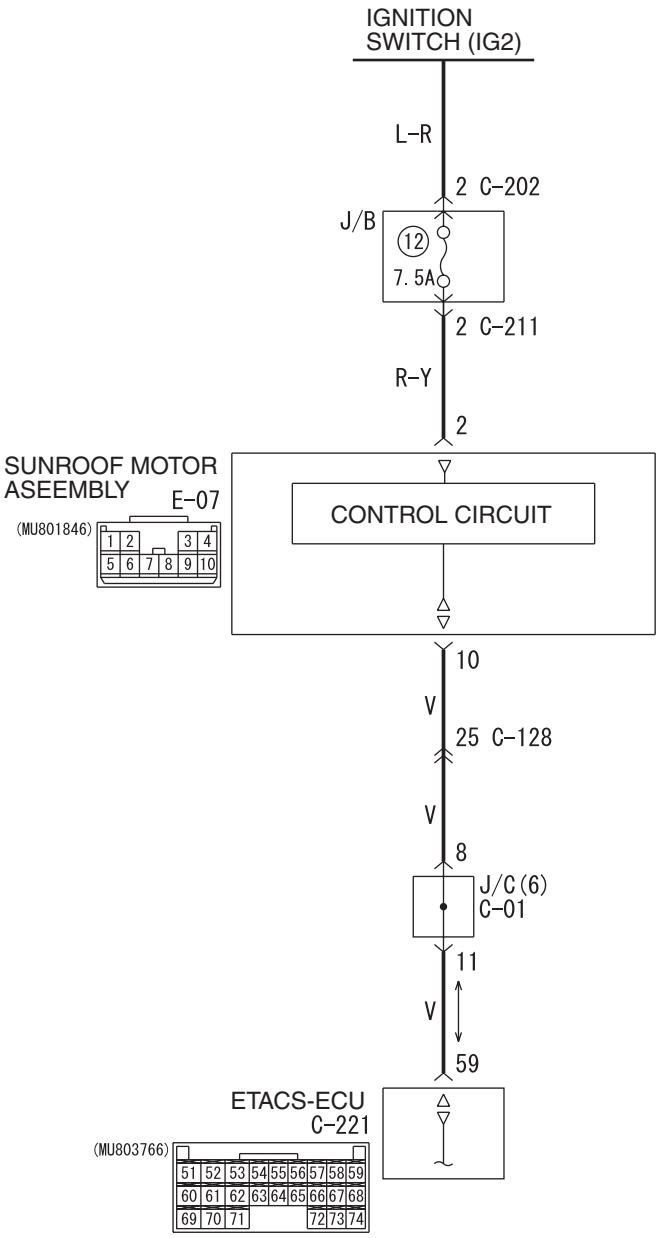

Wire colour code
B : Black LG : Light green G : Green L : Blue W : White Y : Yellow SB : Sky blue
BR : Brown O : Orange GR : Gray R : Red P : Pink V : Violet

W6X54X093A

Main Index
Group TOC

COMMENTS ON TROUBLE SYMPTOM

If the sunroof timer function does not work, the input circuit from the ignition switch (IG1) or the driver's door switch, the communication lines between the ETACS-ECU and the sunroof motor assembly (sunroof-ECU), the sunroof motor assembly (sunroof-ECU) or the ETACS-ECU may be defective.

POSSIBLE CAUSES

- Malfunction of the driver's door switch
- Malfunction of ETACS-ECU
- Malfunction of the sunroof motor assembly (sunroof-ECU)
- Damaged harness wires and connectors

DIAGNOSTIC PROCEDURE

Step 1. Check the operation condition of the sunroof.

Check that the sunroof works normally.

Q: Is the check result normal?

YES : Go to Step 2.

NO : Refer to Inspection Procedure F-1 "The sunroof does not work at all P.54C-148."

Step 2. ECU check on the SWS monitor.

Check that the power supply and earth lines to the sunroof motor assembly (sunroof-ECU) and the ETACS-ECU and the SWS communication lines are normal.

- Ignition switch: OFF
- Operate the sunroof switch.

NOTE: Operate the sunroof switch within the timer period after the ignition switch is turned off.

ECUS TO BE CHECKED

- ETACS ECU
- SUNROOF ECU

OK: "OK" are displayed for all the items

Q: Are the check result normal?

"OK" are displayed for all the items : Go to Step 3.

"NG" is displayed on the "ETACS ECU" menu. : Refer to Inspection Procedure A-3 "Communication with ETACS-ECU is not possible P.54C-51."

"NG" is displayed on the "SUNROOF ECU" menu. : Refer to Inspection Procedure A-5 "Communication with sunroof motor assembly (sunroof-ECU) is not possible P.54C-63."

Step 3. Function diagnosis by using the SWS monitor.

Check the SWS communication signal, which are related to the sunroof.

<Selected item> SUNROOF OPE

- Ignition switch: ON

Item No.	Item name	Normal condition
Item 72	S/R ECU ACK	INPUT CHECK (only momentarily when switch is operated)

OK: Normal condition is displayed.

Q: Is the check result normal?

YES : Go to Step 4.

NO : Replace the sunroof motor assembly.

Step 4. SWS monitor data list

Check the SWS communication signal, which are related to the sunroof timer function.

<Selected item> ETACS ECU

- Ignition switch: OFF
- Driver's door: Close → Open

Item No.	Item name	Normal condition
Item 30	IG SW(IG1)	OFF
Item 32	DR DOOR SW	from OFF to ON

OK: Normal conditions are displayed for all the items

Q: Are the check result normal?

Normal conditions are displayed for all the items. : Go to Step 5.

Normal condition is not displayed for item No.30. : Refer to inspection procedure P-2 "The ignition switch (IG1) signal is not received P.54C-335."

Normal condition is not displayed for item No.32. : Refer to inspection procedure P-5 "The driver's door switch signal is not received P.54C-346 <LH drive vehicles> or P.54C-348 <RH drive vehicles>."

Main Index
Group TOC

Step 5. Retest the system.

After the sunroof motor assembly is replaced, check that the sunroof timer function works normally.

(1) Replace the sunroof motor assembly.
(2) Check that the sunroof timer function works normally.

Q: Is the check result normal?

YES : The trouble can be an intermittent malfunction (Refer to GROUP 00 – How to Cope with Intermittent Malfunction P.00-5).

NO : Replace the ETACS-ECU.

INSPECTION PROCEDURE F-4: The sunroof inhibition function does not work normally (The sunroof operation lock warning buzzer does not sound).

⚠ CAUTION

Whenever the ECU is replaced, ensure that the input and output signal circuits are normal.

Sunroof Lock Function

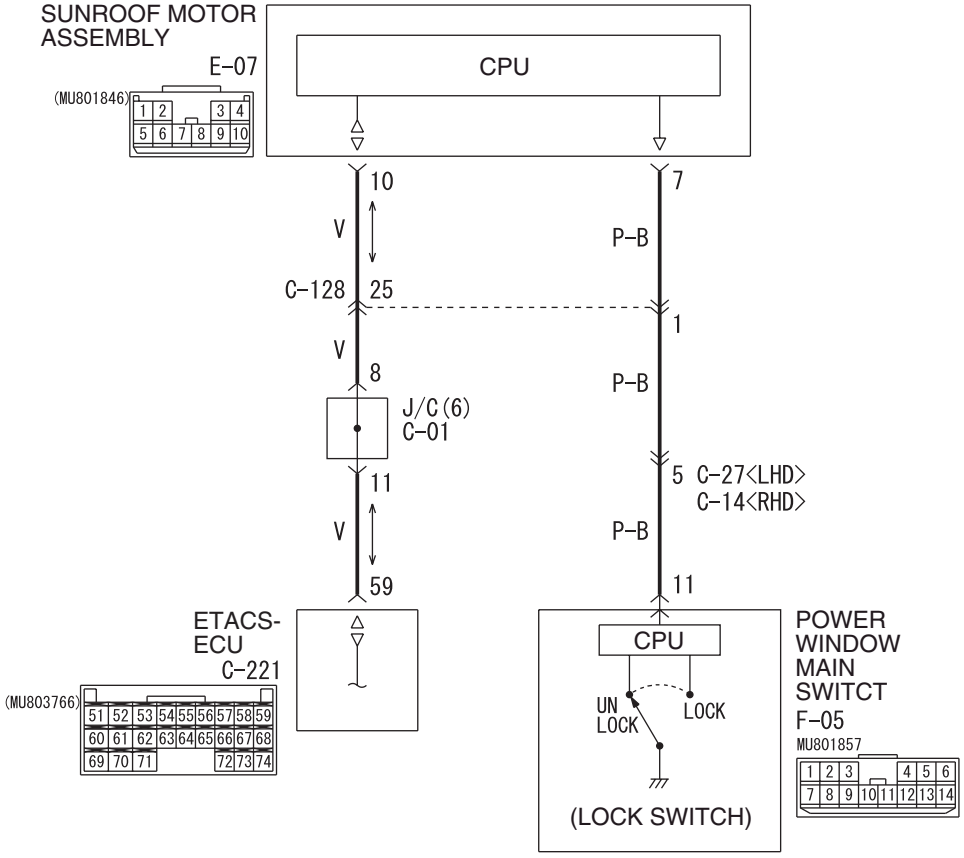

Wire colour code
B : Black LG : Light green G : Green L : Blue W : White Y : Yellow SB : Sky blue
BR : Brown O : Orange GR : Grey R : Red P : Pink V : Violet PU : Purple

W4X54X187A

COMMENTS ON TROUBLE SYMPTOM

If the sunroof inhibition function does not work normally, the sunroof motor assembly, the power window main switch or the ETACS-ECU may be defective.

POSSIBLE CAUSES

- Malfunction of the power window main switch
- Malfunction of the sunroof motor assembly (sunroof ECU)
- Malfunction of the ETACS-ECU
- Damaged harness wires and connectors

Main Index
Group TOC

Step 1. Which does not operate normally, the sunroof inhibition or the sunroof operation lock buzzer?

Q: Which does not operate normally, the sunroof inhibition or the sunroof operation lock buzzer?
The sunroof inhibition does not work normally. : Go to Step 2.
The sunroof operation lock buzzer does not work normally. : Go to Step 4.
Neither operates normally. : Go to Step 5.

Step 2. Check the operation condition of the sunroof.
Check that the sunroof works normally.

Q: Is the check result normal?
YES : Go to Step 3.
NO : Refer to Inspection Procedure F-1 "The sunroof does not work at all P.54C-148."

Step 3. ECU check by using the SWS monitor
Check that the power supply and earth lines to the ETACS-ECU and the sunroof motor assembly (incorporating sunroof-ECU) and the SWS communication lines are normal.
- Ignition switch: ON
- Operate the sunroof switch.

ECUS TO BE CHECKED
- ETACS ECU
- Sunroof ECU

OK: Normal conditions are displayed for all the items.

Q: Are the check result normal?
"OK" are displayed for all the items : Go to Step 4.
"NG" is displayed on the "ETACS ECU" menu. : Refer to Inspection Procedure A-3 "Communication with ETACS-ECU is not possible P.54C-51."
"NG" is displayed on the "SUNROOF ECU" menu. : Refer to Inspection Procedure A-5 "Communication with sunroof motor assembly (sunroof-ECU) is not possible P.54C-63."

Step 4. Function diagnosis by using the SWS monitor.
Check the SWS communication signal, which are related to the sunroof operation lock buzzer.

<Selected item> S/R- REAR S/R LOCK
- Ignition switch: ON
- Power window lock switch :ON
- Operate the sunroof switch

Item No.	Item name	Normal condition
Item 30	IG SW(IG1)	ON
Item 43	BUZZER	ON
Item 72	S/R ECU ACK	BUZZER ACK

OK: Normal conditions is displayed.

Q: Is the check result normal?
NO : The trouble can be an intermittent malfunction (Refer to GROUP 00 – How to Cope with Intermittent Malfunction P.00-5).
NO : Replace the ETACS-ECU.

Step 5. Confirm the operation of the power windows.
Check that each of the power windows (excluding the driver's door) works normally by using the power window main switch.

Q: Is the check result normal?
YES : Go to Step 6.
NO : Inspection procedure D-4 "Passenger's and/or rear power window(s) do not work by means of the power window main switch P.54C-136."

Step 6. ECU check by using the SWS monitor
Check that the power supply and earth lines to the ETACS-ECU and the sunroof motor assembly (incorporating sunroof-ECU) and the SWS communication lines are normal.
- Ignition switch: ON
- Operate the sunroof switch.

ECUS TO BE CHECKED
- ETACS ECU
- Sunroof ECU

OK: Normal conditions are displayed for all the items.

Main Index
Group TOC

Q: Are the check result normal?

"OK" are displayed for all the items : Go to Step 7.

"NG" is displayed on the "ETACS ECU" menu. : Refer to Inspection Procedure A-3 "Communication with ETACS-ECU is not possible P.54C-51."

"NG" is displayed on the "SUNROOF ECU" menu. : Refer to Inspection Procedure A-5 "Communication with sunroof motor assembly (sunroof-ECU) is not possible P.54C-63."

Step 7. SWS monitor data list.

Check the SWS communication signal, which are related to the sunroof inhibition function.

<Selected item> S/R- REAR S/R LOCK

- Ignition switch: ON
- Power window lock switch :ON
- Operate the sunroof switch

Item No.	Item name	Normal condition
Item 30	IG SW(IG1)	ON
Item 43	BUZZER	ON
Item 72	S/R ECU ACK	BUZZER ACK

OK: Normal conditions are displayed for all the items.

Q: Are the check result normal?

Normal conditions are displayed for all the items : Go to Step 8.

Normal condition is not displayed for item No.30 : Refer to inspection procedure P-2 "The ignition switch (IG1) signal is not received P.54C-335."

Normal condition is not displayed for item No.43 : Replace the ETACS.

Normal condition is not displayed for item No.72 : Replace the sunroof motor assembly.

Step 8. Connector check: E-07 sunroof motor assembly connector and F-05 power window main switch connector

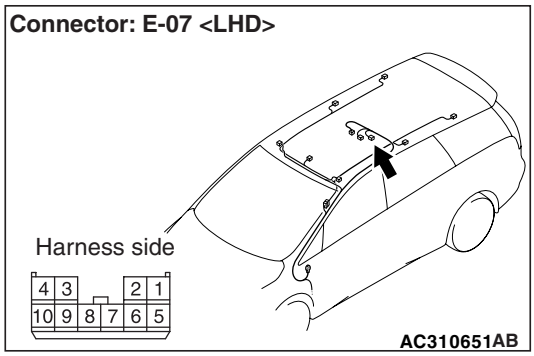

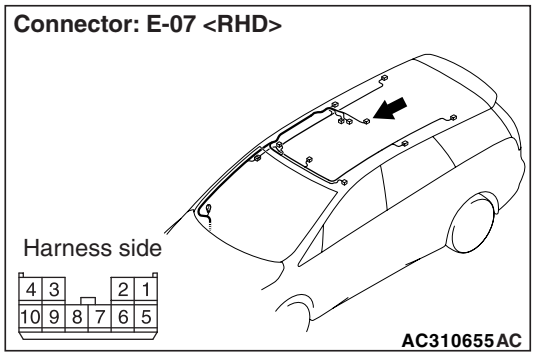

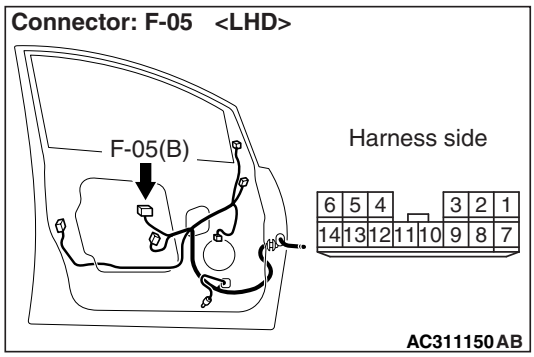

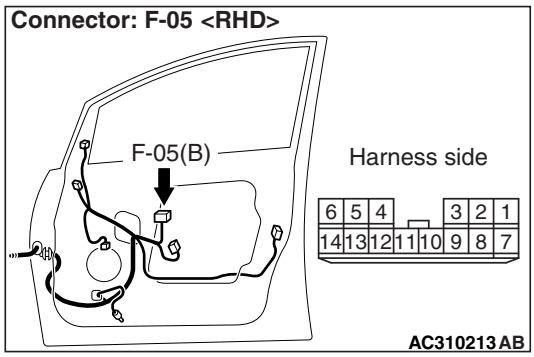

Q: Is the check result normal?

YES : Go to Step 9.

NO : Repair the connector.

Main Index
Group TOC

Step 9. Check the wiring harness between E-07 sunroof motor assembly connector terminal No.7 and F-05 power window main switch connector terminal No.11.

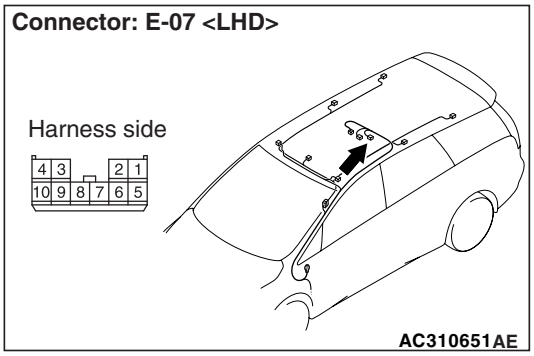

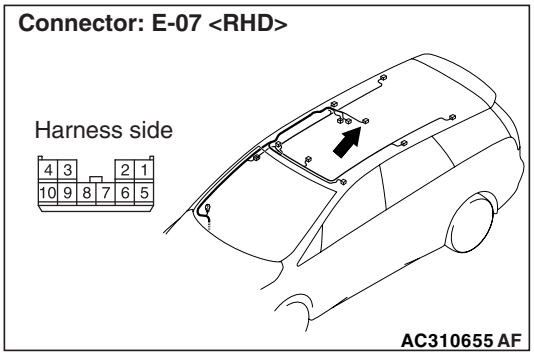

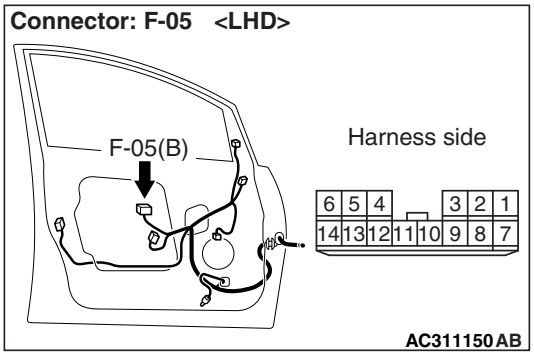

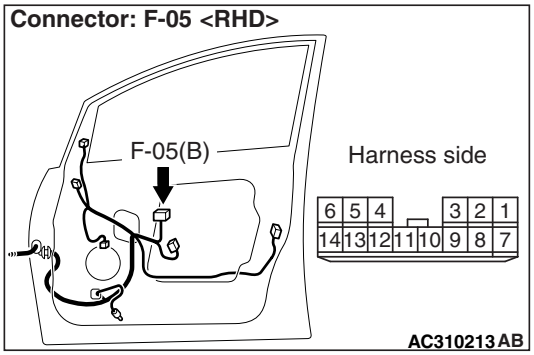

NOTE:

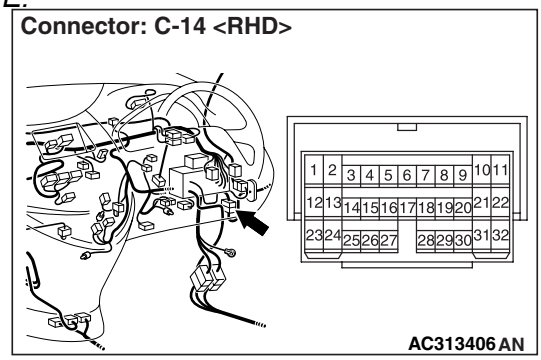

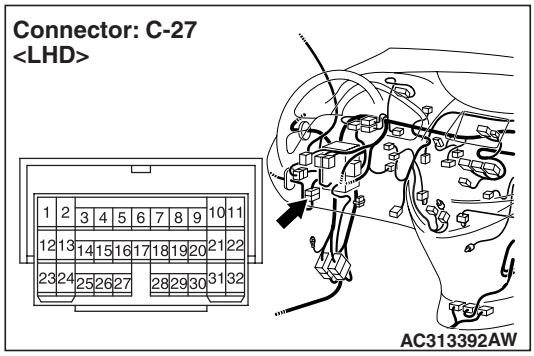

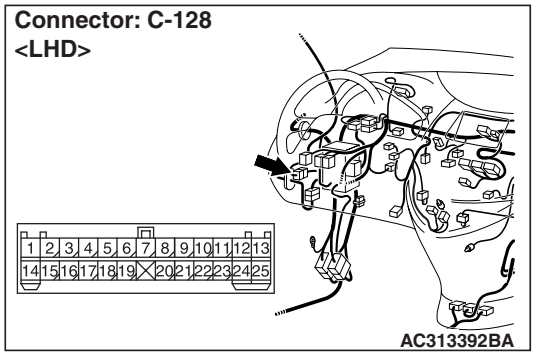

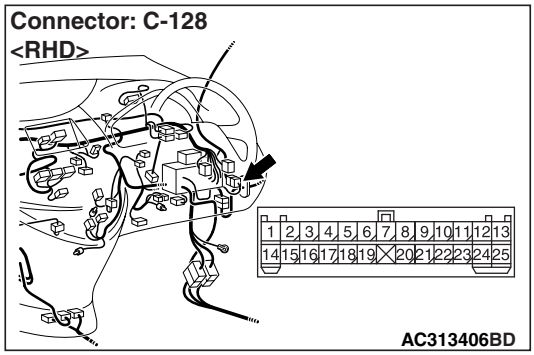

Prior to the wiring harness inspection, check intermediate connector C-128, C-27 <LH drive vehicles>, C-14 <RH drive vehicles> and repair if necessary.

- Check the communication lines for open circuit.

Q: Is the check result normal?

YES : The trouble can be an intermittent malfunction (Refer to GROUP 00, How to Cope with Intermittent Malfunction P.00-5).

NO : Repair the harness wire.

Main Index
Group TOC

INSPECTION PROCEDURE F-5: Sunroof anti-trap function does not work normally.

⚠ CAUTION

Whenever the ECU is replaced, ensure that the input and output signal circuits are normal.

COMMENTS ON TROUBLE SYMPTOM

If the sunroof anti-trap function does not work, the sunroof motor assembly (sunroof-ECU) may be defective.

POSSIBLE CAUSES

- Malfunction of the sunroof motor assembly (sunroof-ECU)

DIAGNOSTIC PROCEDURE

Retest the system.

Check that the sunroof anti-trap function work normally.

Q: Is the check result normal?

YES : The trouble can be an intermittent malfunction (Refer to GROUP 00 – How to Cope with Intermittent Malfunction P.00-5).

NO : Replace the sunroof motor assembly.

Main Index
Group TOC

WINDSHIELD WIPER AND WASHER

INSPECTION PROCEDURE G-1: The windshield wipers does not work at all.

⚠ CAUTION

Whenever the ECU is replaced, ensure that the input and output signal circuits are normal.

Windshield Wiper Power Supply Circuit

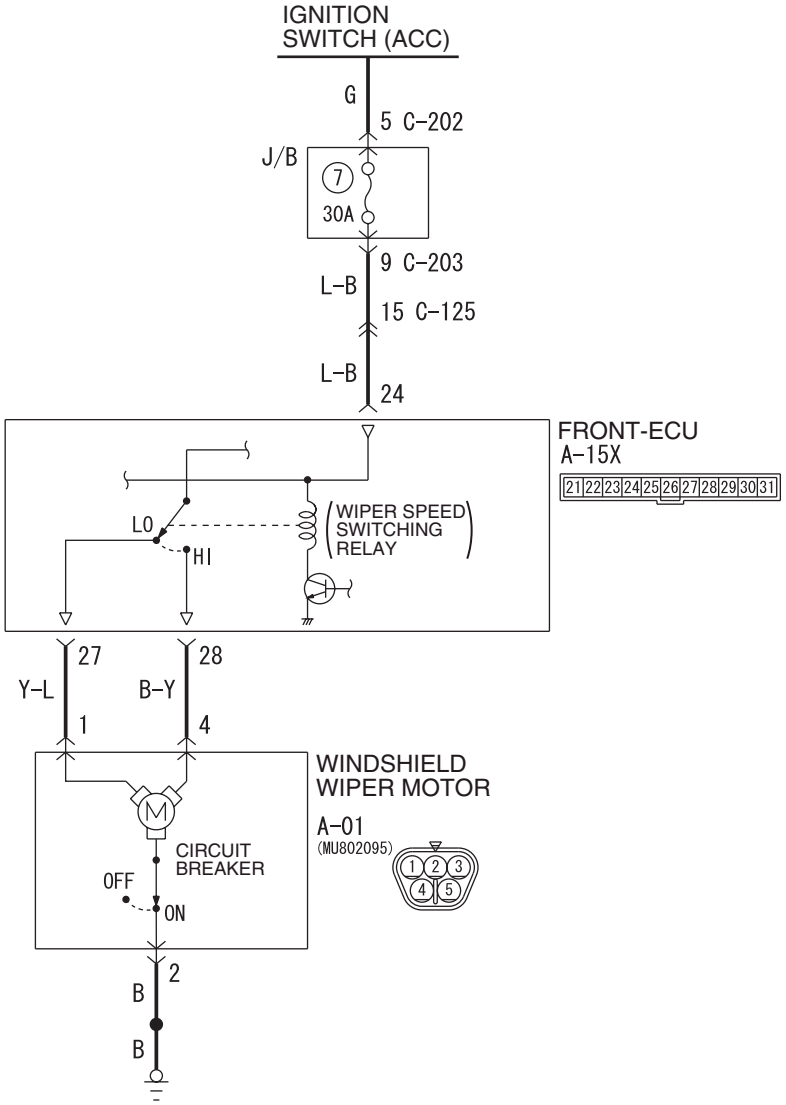

Wire colour code
B : Black LG : Light green G : Green L : Blue W : White Y : Yellow SB : Sky blue
BR : Brown O : Orange GR : Grey R : Red P : Pink V : Violet PU : Purple

W6X54X009A

Main Index
Group TOC

COMMENTS ON TROUBLE SYMPTOM

The windshield wiper motor, the column switch or the front-ECU may be defective. If a problem is found in the ECU check by using the SWS monitor, also check the wiper backup circuit (between C-301 column switch connector terminal No.8 and A-15X front-ECU connector terminal No.26) and repair if necessary.

POSSIBLE CAUSES

- Malfunction of the windshield wiper motor
- Malfunction of the column switch
- Malfunction of the front-ECU
- Damaged harness wires and connectors

DIAGNOSIS PROCEDURE

Step 1. ECU check by using the SWS monitor.

Check that the power supply and earth lines to the column switch (column-ECU) and the front-ECU and the SWS communication lines are normal.

- Turn the ignition switch to the ON position.

ECUS TO BE CHECKED

- COLUMN ECU
- FRONT ECU

OK: "OK" are displayed for all the items

Q: Are the check result normal?

"OK" is displayed for all the items : Go to Step 2.

"NG" is displayed on the "COLUMN ECU" menu. : Refer to Inspection Procedure A-2 "Communication with column switch (column-ECU) is not possible P.54C-45."

"NG" is displayed on the "FRONT ECU" menu. : Refer to Inspection Procedure A-4 "Communication with front-ECU is not possible P.54C-58."

Step 2. Function diagnosis by using the SWS monitor.

Check the SWS communication signal, which are related to the windshield wiper function.

<Selected item> F.WIPER INT

- Turn the ignition switch to the ACC position.
- Windshield wiper switch: INT

Item No.	Item name	Normal condition
Item 05	INT WIPER SW	ON
Item 31	IGNITION SW ACC	ON
Item 70	FRONT ECU ACK	NORMAL ACK or HI-BEAM ACK

OK: Normal conditions are displayed for all the items.

Q: Are the check result normal?

Normal conditions displayed for all the items : Go to Step 3.

Normal condition is not displayed for item No.05 : Replace the column switch.

Normal condition is not displayed for item No.31 : Refer to inspection procedure P-1 "The ignition switch (ACC) signal is not received P.54C-332."

Normal condition is not displayed for item No.70 : Replace the front-ECU.

Step 3. Connector check: A-01 windshield wiper motor connector.

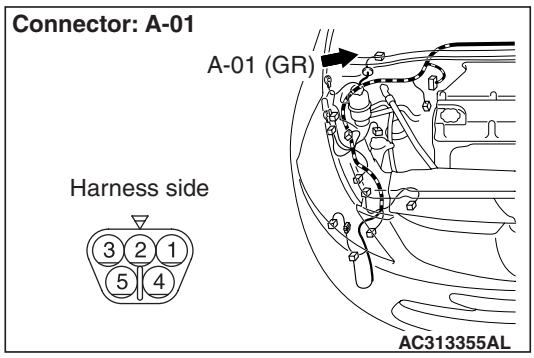

Q: Is the check result normal?

YES : Go to Step 4.

NO : Repair the connector.

Step 4. Check the windshield wiper motor assembly.

Refer to GROUP 51 – Windshield wiper P.51-20.

Q: Is the check result normal?

YES : Go to Step 5

NO : Replace the windshield wiper motor assembly.

Main Index
Group TOC

Step 5. Resistance measurement at the A-01 windshield wiper motor connector.

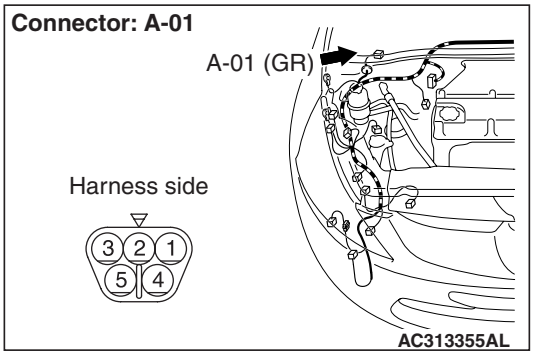

(1) Disconnect the connector, and measure at the wiring harness side.

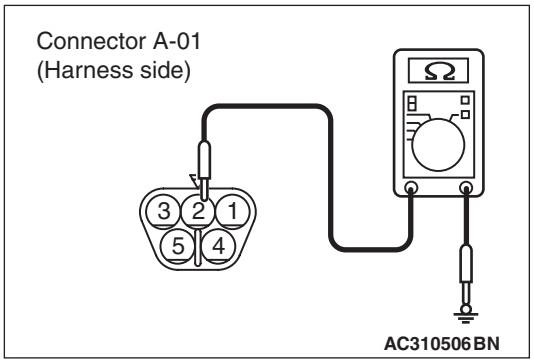

(2) Continuity between A-01 windshield wiper motor connector terminal No.2, and body earth

OK: 2Ω or less

Q: Is the check result normal?
YES : Go to Step 7.
NO : Go to Step 6.

Step 6. Check the wiring harness between A-01 windshield wiper motor connector terminal No.2 and body earth.

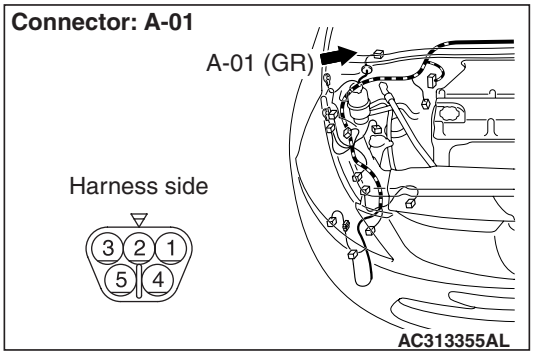

- Check the earth wires for open circuit.

Q: Is the check result normal?
YES : The trouble can be an intermittent malfunction (Refer to GROUP 00 – How to Cope with Intermittent Malfunction P.00-5).
NO : Repair the wiring harness.

Step 7. Connector check: A-15X front-ECU connector.

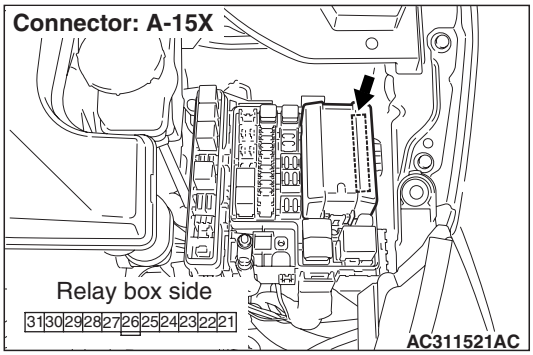

Q: Is the check result normal?
YES : Go to Step 8.
NO : Repair the connector.

Step 8. Voltage measurement at the A-15X front-ECU connector.

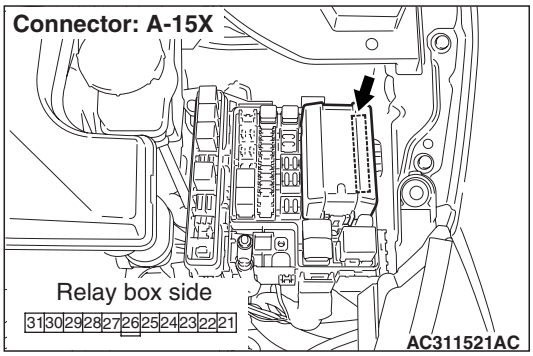

(1) Remove the front-ECU, and measure at the relay box side.
(2) Ignition switch: ACC

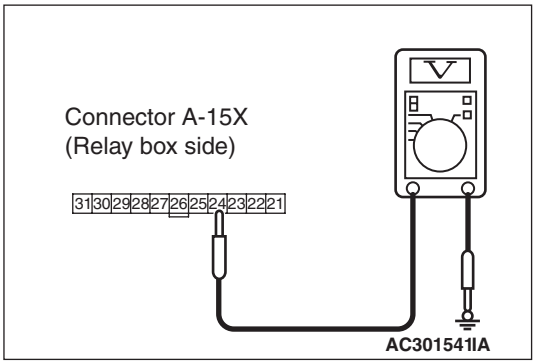

(3) Check the voltage between the A-15X front-ECU connector terminal No.24 and body earth.

OK: System voltage

Q: Is the check result normal?
YES : Go to Step 10.
NO : Go to Step 9.

Main Index
Group TOC

Step 9. Check the wiring harness between A-15X front-ECU connector terminal No.24 and the ignition switch (ACC).

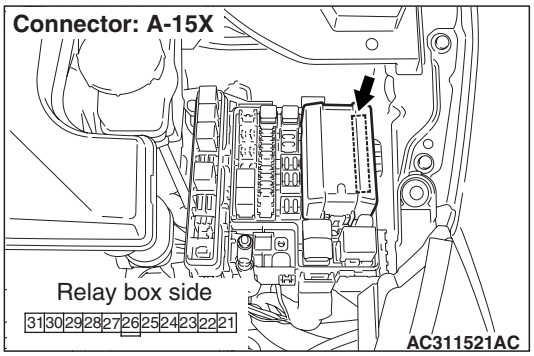

NOTE:

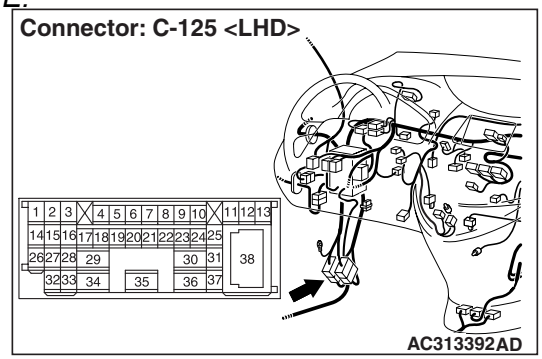

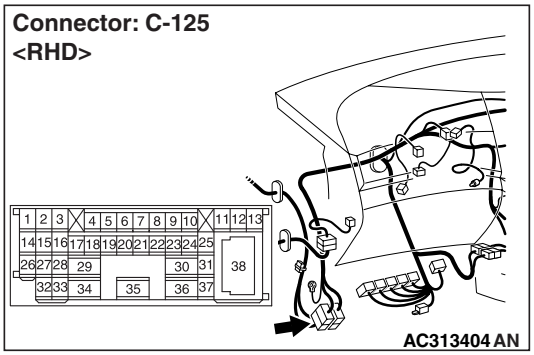

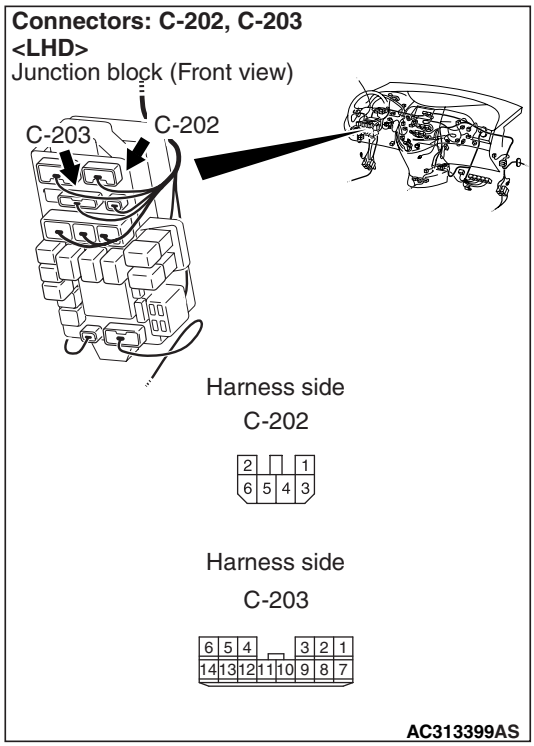

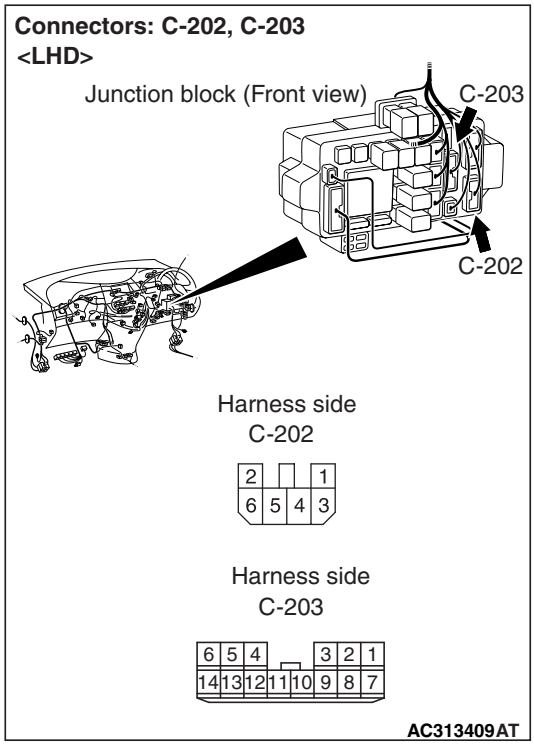

Prior to the wiring harness inspection, check the junction block connectors C-202, C-203 and intermediate connector C-125 and repair if necessary.

- Check the power supply line to the ignition switch (ACC) for open circuit.

Q: Is the check result normal?
YES : Go to Step 10.
NO : Repair the wiring harness.

Main Index
Group TOC

Step 10. Retest the system.
The windshield wiper should now work normally at all.

Q: Is the check result normal?
YES : The trouble can be an intermittent malfunction (Refer to GROUP 00 – How to Cope with Intermittent Malfunction P.00-5).
NO : Replace the front-ECU.

INSPECTION PROCEDURE G-2: The windshield wipers does not work when the wiper switch is at "INT", "WASHER" or "MIST" position. However, the wipers work at low speed when the switch is at "LO" and "HI" position.

⚠ CAUTION
Whenever the ECU is replaced, ensure that the input and output signal circuits are normal.

Windshield Wiper Motor Drive Circuit

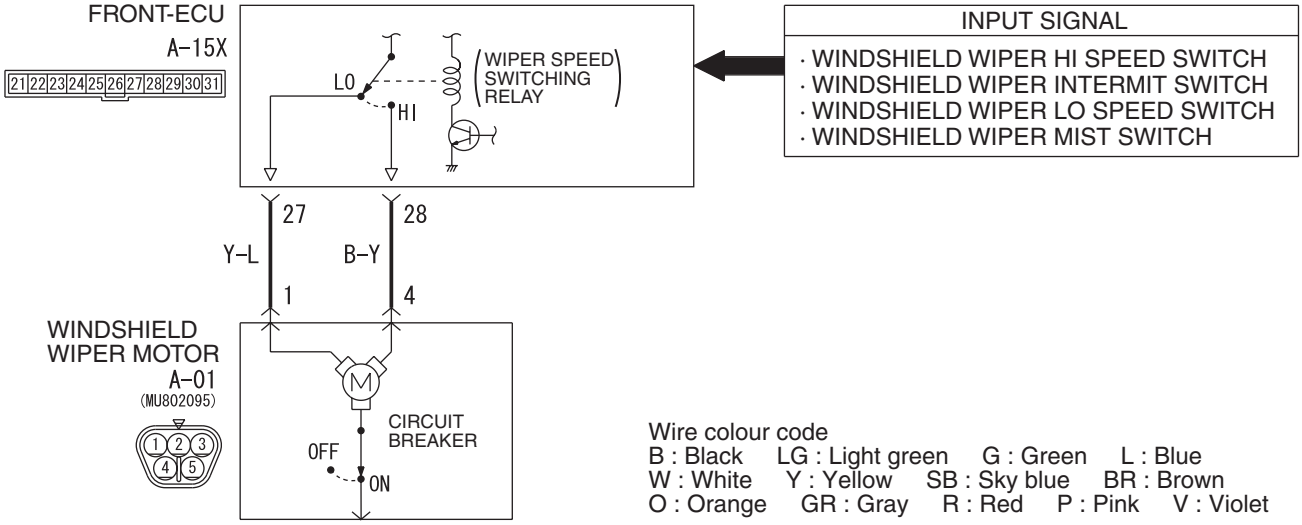

COMMENTS ON TROUBLE SYMPTOM

The system may be at fail-safe mode as the SWS communication line is defective. If the ETACS-ECU does not receive the ignition switch (ACC) signal due to an open circuit in the SWS communication lines or other reasons when the ignition switch is at the ACC position, the system will enter the fail-safe mode.

POSSIBLE CAUSES

- Malfunction of the column switch
- Malfunction of the front-ECU
- Damaged harness wires and connectors

Main Index
Group TOC

DIAGNOSIS PROCEDURE

Step 1. ECU check by using the SWS monitor.
Check that the power supply and earth lines to the column switch (column-ECU) and the front-ECU and the SWS communication lines are normal.
- Turn the ignition switch to the ACC position.

ECUS TO BE CHECKED
- COLUMN ECU
- FRONT ECU

OK: "OK" are displayed for all the items

Q: Are the check result normal?
"OK" are displayed for all the items : Go to Step 2.
"NG" is displayed on the "COLUMN ECU" menu. : Refer to Inspection Procedure A-2 "Communication with column switch (column-ECU) is not possible P.54C-45."
"NG" is displayed on the "FRONT ECU" menu. : Refer to Inspection Procedure A-4 "Communication with front-ECU is not possible P.54C-58."

Step 2. Retest the system.
The windshield wiper should now work normally.

Q: Is the check result normal?
YES : The trouble can be an intermittent malfunction (Refer to GROUP 00 – How to Cope with Intermittent Malfunction P.00-5).
NO : Replace the front-ECU.

INSPECTION PROCEDURE G-3: The windshield wipers do not stop at the specified park position

⚠ CAUTION
Whenever the ECU is replaced, ensure that the input and output signal circuits are normal.

Windshield Wiper Automatic Stop Relay Circuit

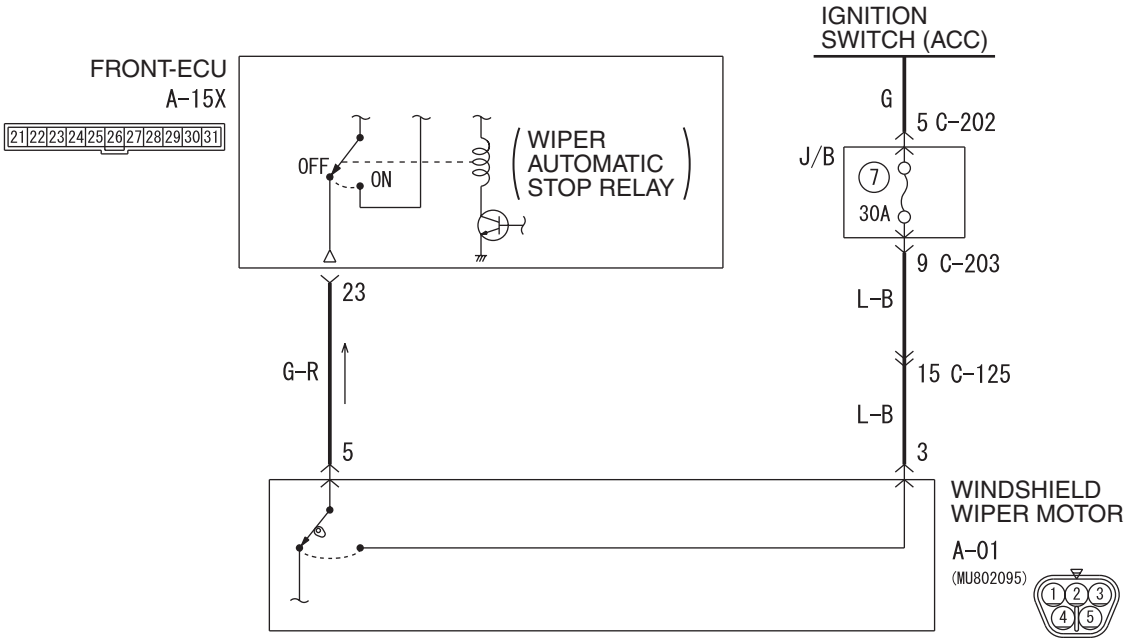

Wire colour code
B : Black LG : Light green G : Green L : Blue W : White Y : Yellow SB : Sky blue
BR : Brown O : Orange GR : Gray R : Red P : Pink V : Violet

W4X54E153A

Main Index
Group TOC

COMMENTS ON TROUBLE SYMPTOM

The windshield wiper motor or the front-ECU may be defective.

POSSIBLE CAUSES

- Malfunction of the windshield wiper motor
- Malfunction of the front-ECU
- Damaged harness wires and connectors

DIAGNOSIS PROCEDURE

Step 1. Connector check: A-01 windshield wiper motor connector.

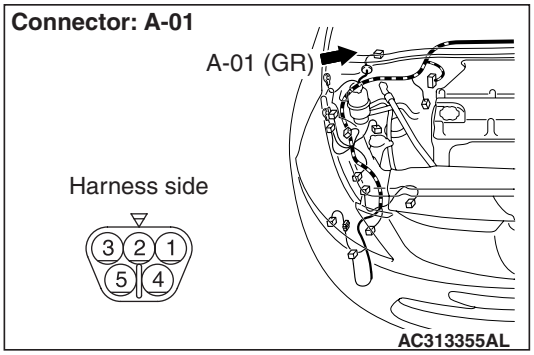

Q: Is the check result normal?
YES : Go to Step 2.
NO : Repair the connector.

Step 2. Check the windshield wiper motor assembly.

Refer to GROUP 51 – Windshield wiper P.51-20.

Q: Is the check result normal?
YES : Go to Step 3
NO : Replace the windshield wiper motor assembly.

Step 3. Voltage measurement at the A-01 windshield wiper motor connector.

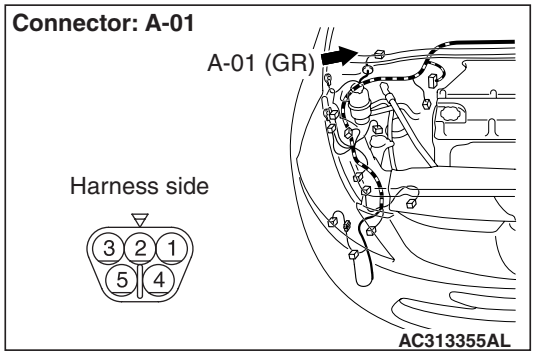

(1) Disconnect the connector, and measure at the wiring harness side.
(2) Ignition switch: ACC

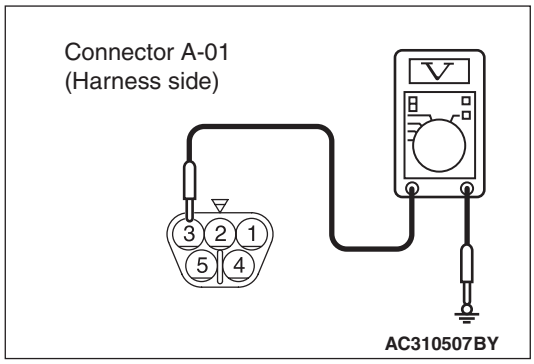

(3) Check the voltage between the A-01 windshield wiper motor connector terminal No.3 and body earth.

OK: System voltage

Q: Is the check result normal?
YES : Go to Step 5.
NO : Go to Step 4.

Main Index
Group TOC

Step 4. Check the wiring harness between A-01 windshield wiper motor connector terminal No.3 and ignition switch (ACC).

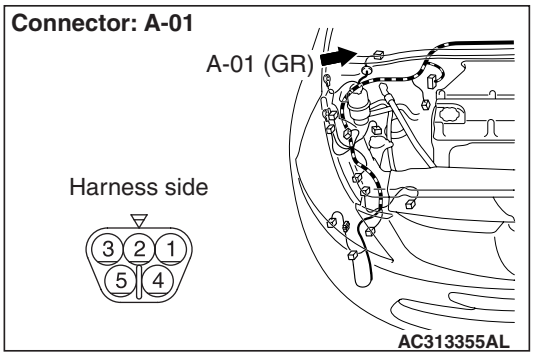

NOTE:

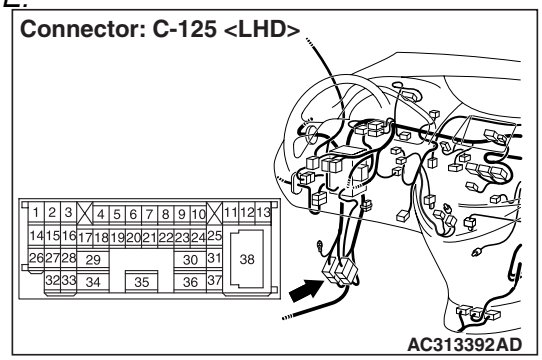

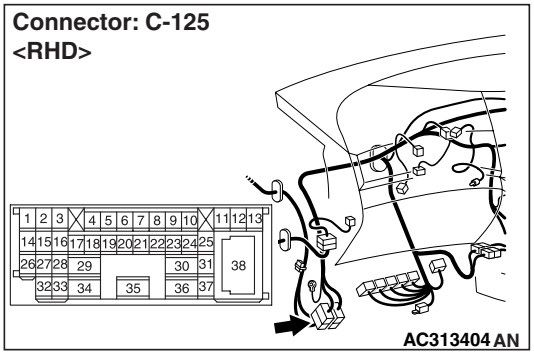

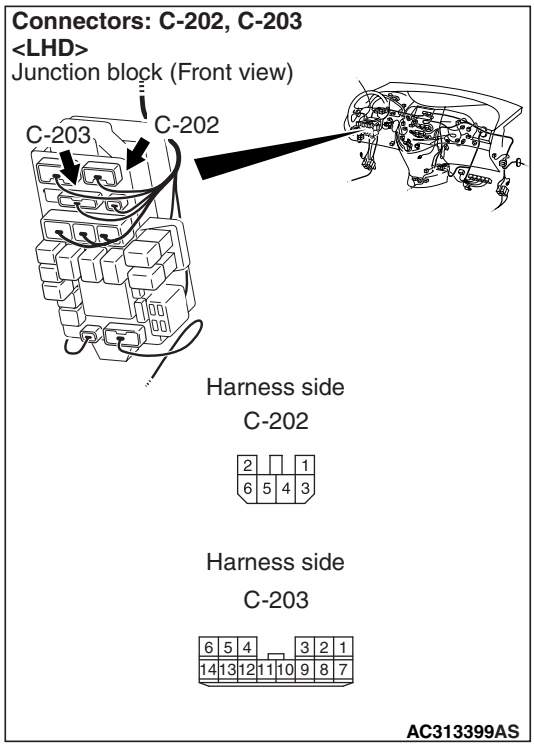

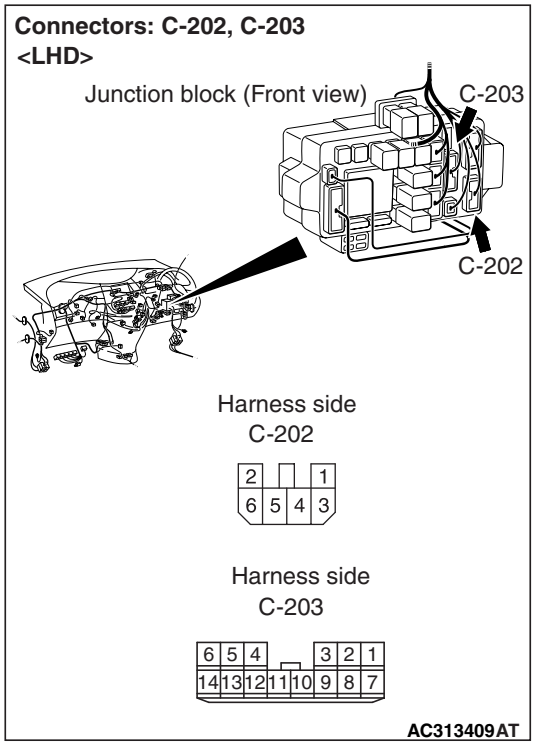

Prior to the wiring harness inspection, check the junction connectors C-202, C-203, the intermediate connectors C-125, and repair if necessary.

- Check the power supply line to ignition switch (ACC) for open circuit.

Q: Is the check result normal?

YES : The trouble can be an intermittent malfunction (Refer to GROUP 00 – How to Cope with Intermittent Malfunction P.00-5).

NO : Repair the wiring harness.

Step 5. Connector check: A-15X front-ECU connector.

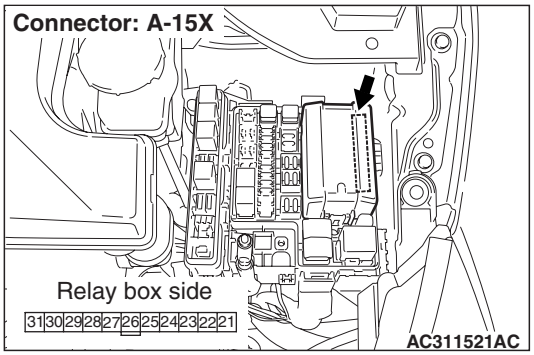

Q: Is the check result normal?
YES : Go to Step 6.
NO : Repair the connector.

Step 6. Check the wiring harness between A-01 windshield wiper motor connector terminal No.5 and A-15X front-ECU connector terminal No.23.

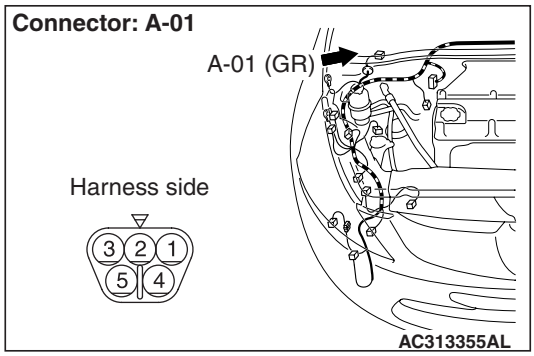

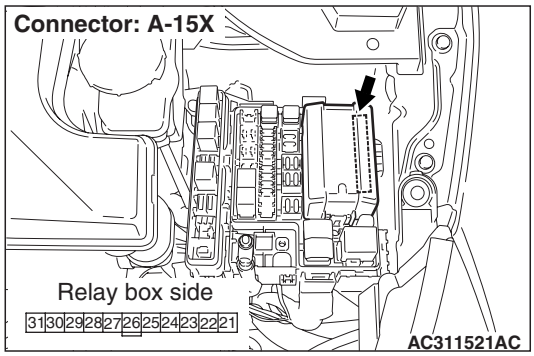

- Check the input signal lines.

Q: Is the check result normal?
YES : Go to Step 7.
NO : Repair the wiring harness.

Step 7. Retest the system.
Check that the windshield wipers stop at the specified park position.

Q: Is the check result normal?
YES : The trouble can be an intermittent malfunction (Refer to GROUP 00 – How to Cope with Intermittent Malfunction P.00-5).
NO : Replace the front-ECU.

Main Index
Group TOC

INSPECTION PROCEDURE G-4: The windshield wipers does not work normally.

⚠ CAUTION
Whenever the ECU is replaced, ensure that the input and output signal circuits are normal.

Windshield Wiper Motor Drive Circuit

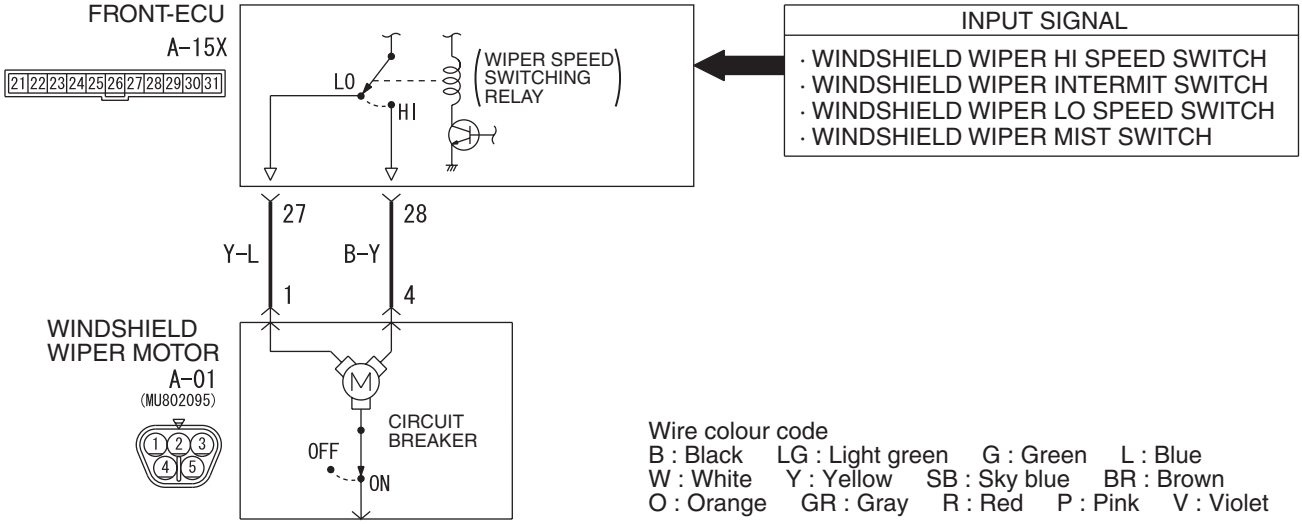

COMMENTS ON TROUBLE SYMPTOM

The windshield wiper motor, the column switch or the front-ECU may be defective.

POSSIBLE CAUSES

- Malfunction of the windshield wiper motor
- Malfunction of the column switch
- Malfunction of the front-ECU
- Damaged harness wires and connectors

Step 1. SWS monitor data list.
Check the SWS communication signal, which are related to the windshield wipers.

<Selected item> Column switch (column-ECU)
- Ignition switch: ON
- Move the windshield wiper switch to each position.

Item No.	Item name	Normal condition
Item 31	IG SW(ACC)	ON
Item 05	INT WIPER SW	ON
Item 06	LO WIPER SW	ON
Item 07	HI WIPER SW	ON
Item 08	MIST WIPER SW	ON

OK: Normal conditions are displayed for all the functions of the switch.

Q: Are the check result normal?
YES : Go to Step 2.
NO : Refer to Inspection Procedure P-7 "The column switch (wind shield wiper/washer and rear wiper washer switch) signal is not received P.54C-353."

Main Index
Group TOC

Step 2. Connector check: A-01 windshield wiper motor connector.

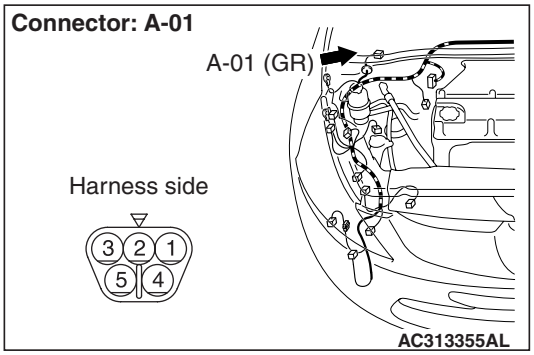

Q: Is the check result normal?
YES : Go to Step 3.
NO : Repair the defective connector.

Step 3. Check the windshield wiper motor assembly.
Refer to GROUP 51 – Windshield wiper P.51-20.

Q: Is the check result normal?
YES : Go to Step 4.
NO : Replace the windshield wiper motor assembly.

Step 4. Retest the system.
Check that the windshield wipers work normally by moving the switch to HI or MIST position.

Q: Is the check result normal?
YES : Go to Step 5.
NO : Go to Step 8.

Step 5. Connector check: A-15X front-ECU connector.

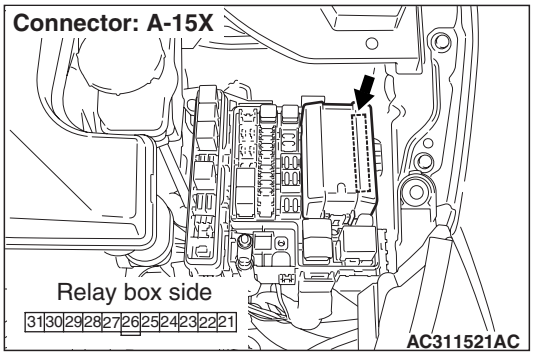

Q: Is the check result normal?
YES : Go to Step 6.
NO : Repair the defective connector.

Step 6. Check the wiring harness between A-15X front-ECU connector terminal No.27 and A-01 windshield wiper motor connector terminal No.1.

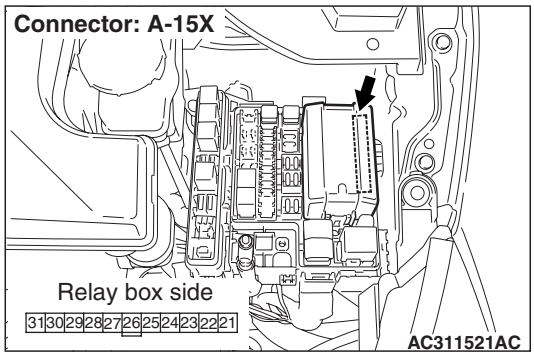

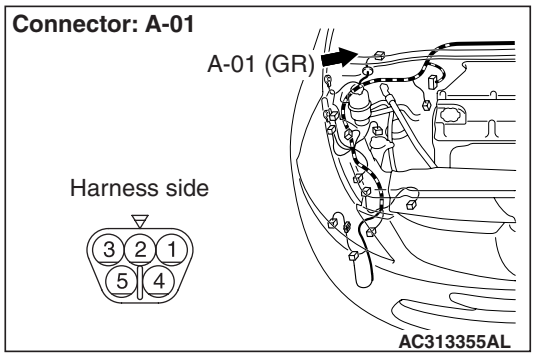

- Check the output lines for open circuit.

Q: Is the check result normal?
YES : Go to Step 7.
NO : Repair the wiring harness.

Step 7. Retest the system.
Check that the windshield wipers work normally by moving the switch to each position.

Q: Is the check result normal?
YES : The trouble can be an intermittent malfunction (Refer to GROUP 00 – How to Cope with Intermittent Malfunction P.00-5).
NO : Replace the front-ECU.

Main Index
Group TOC

Step 8. Connector check: A-15X front-ECU connector.

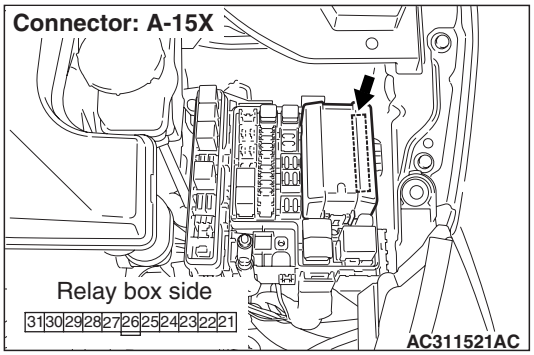

Q: Is the check result normal?
YES : Go to Step 9.
NO : Repair the defective connector.

Step 9. Check the wiring harness between A-15X front-ECU connector terminal No.28 and A-01 windshield wiper motor connector terminal No.4.

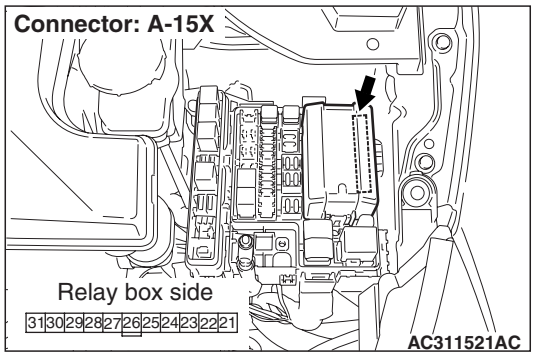

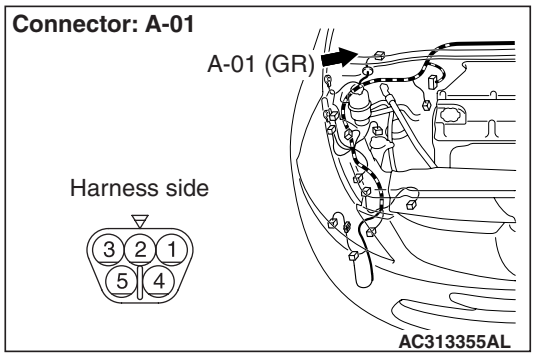

- Check the output lines for open circuit.

Q: Is the check result normal?
YES : Go to Step 10.
NO : Repair the wiring harness.

Step 10. Retest the system.
Check that the windshield wipers work normally by moving the switch to each position.

Q: Is the check result normal?
YES : The trouble can be an intermittent malfunction (Refer to GROUP 00 – How to Cope with Intermittent Malfunction P.00-5).
NO : Replace the front-ECU.

Main Index
Group TOC

INSPECTION PROCEDURE G-5: The intermittent wiper interval can not be adjusted by operating the windshield intermittent wiper volume control.

⚠ CAUTION
Whenever the ECU is replaced, ensure that the input and output signal circuits are normal.

Windshield Wiper Intermittent Volume Input Signal

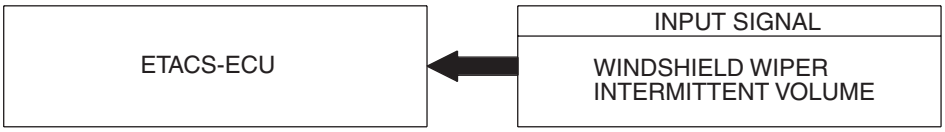

W4X54E165A

COMMENTS ON TROUBLE SYMPTOM

The column switch or the front-ECU may be defective.

POSSIBLE CAUSES

- Malfunction of the column switch
- Malfunction of the front-ECU
- Damaged harness wires and connectors

DIAGNOSIS PROCEDURE

Step 1. SWS monitor data list

- Rotate the windshield intermittent wiper volume when the vehicle is stopped.

NOTE: Also check that the windshield wiper interval changes smoothly when the windshield intermittent wiper interval adjusting knob is rotated from "SLOW" to "FAST" positions.

Item No.	Item name	Normal condition
Item 37	INT WIPER TIME	4.6 – 32.0 s

OK: Normal condition is displayed.

Q: Is the check result normal?
YES : Go to Step 2.
NO : Refer to Inspection Procedure P-8 "The windshield intermittent wiper volume signal is not received P.54C-355."

Step 2. Retest the system.

Check that the windshield intermittent wiper interval can be adjusted by operating the windshield intermittent wiper volume control.

OK: The intermittent wiper interval is changed as the intermittent wiper volume is rotated.

Q: Is the check result normal?
YES : The trouble can be an intermittent malfunction (Refer to GROUP 00 – How to Cope with Intermittent Malfunction P.00-5).
NO : Replace the front-ECU.

Main Index
Group TOC

INSPECTION PROCEDURE G-6: The intermittent wiper interval is not changed according to the vehicle speed.

⚠ CAUTION
Whenever the ECU is replaced, ensure that the input and output signal circuits are normal.

Variable Intermittent Wiper Control Circuit

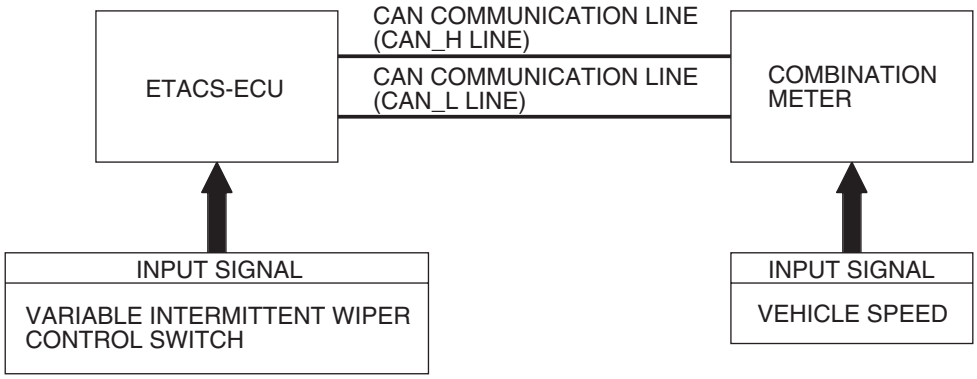

W4X54E155A

COMMENTS ON TROUBLE SYMPTOM

The ETACS-ECU calculates the intermittent wiper interval according to the vehicle speed signal which is sent by the engine-ECU <M/T> or engine-A/T-ECU <A/T>.
If the intermittent wiper interval does not depend on the vehicle speed, the input circuit of the vehicle speed signal and the ETACS-ECU may be defective.

POSSIBLE CAUSES

- Malfunction of the ETACS-ECU
- Damaged harness wires and connectors

DIAGNOSIS PROCEDURE

Step 1. Retest the system.
Check that the windshield intermittent wiper interval can be adjusted by operating the windshield intermittent wiper volume control.

Q: Is the check result normal?
YES : Go to Step 2.
NO : Refer to Inspection Procedure G-5 "The intermittent wiper interval can not be adjusted by operating the windshield intermittent wiper volume control P.54C-173."

Step 2. Customize function by using the SWS monitor.
Use the SWS monitor customize function to confirm that "Wiper speed-sensitive operation" is set to "With function".

Q: Is the check result normal?
YES : Go to Step 3.
NO : Use the SWS monitor customize function to set the "Wiper speed-sensitive operation" to "With function" (Refer to P.54C-432).

Step 3. ECU check by using the SWS monitor.
Check that the power supply and earth lines to the ETACS-ECU and the SWS communication lines are normal.
- Ignition switch: ON

ECU TO BE CHECKED
- ETACS ECU

OK: "OK" is displayed on the "ETACS ECU" menu.

Q: Is the check result normal?
YES : Go to Step 4.
NO : Refer to Inspection Procedure A-3 "Communication with ETACS-ECU is not possible P.54C-51."

Main Index
Group TOC

Step 4. ETACS ANALOG data by using the SWS monitor.

Check the ETACS-ECU input signal related to the vehicle speed-dependent intermittent wiper interval.

- Set the simulated vehicle speed at approximately 10km/h.

Item No.	Item name	Normal condition
Item 03	vehicle speed	8 – 10km/h

OK: Normal condition is displayed.

Q: Is the check result normal?

YES : Go to Step 5.

NO : Refer to inspection procedure P-23 "The vehicle speed signal is not received P.54C-425."

Step 5. Retest the system.

(1) Replace the ETACS-ECU.

(2) Check that the vehicle speed-dependent intermittent wiper system should work normally.

Q: Is the check result normal?

YES : The trouble can be an intermittent malfunction (Refer to GROUP 00 – How to Cope with Intermittent Malfunction P.00-5).

NO : Replace the combination mater.

Main Index
Group TOC

INSPECTION PROCEDURE G-7: The windshield washer does not work.

⚠ CAUTION
Whenever the ECU is replaced, ensure that the input and output signal circuits are normal.

Windshield Washer Motor Circuit

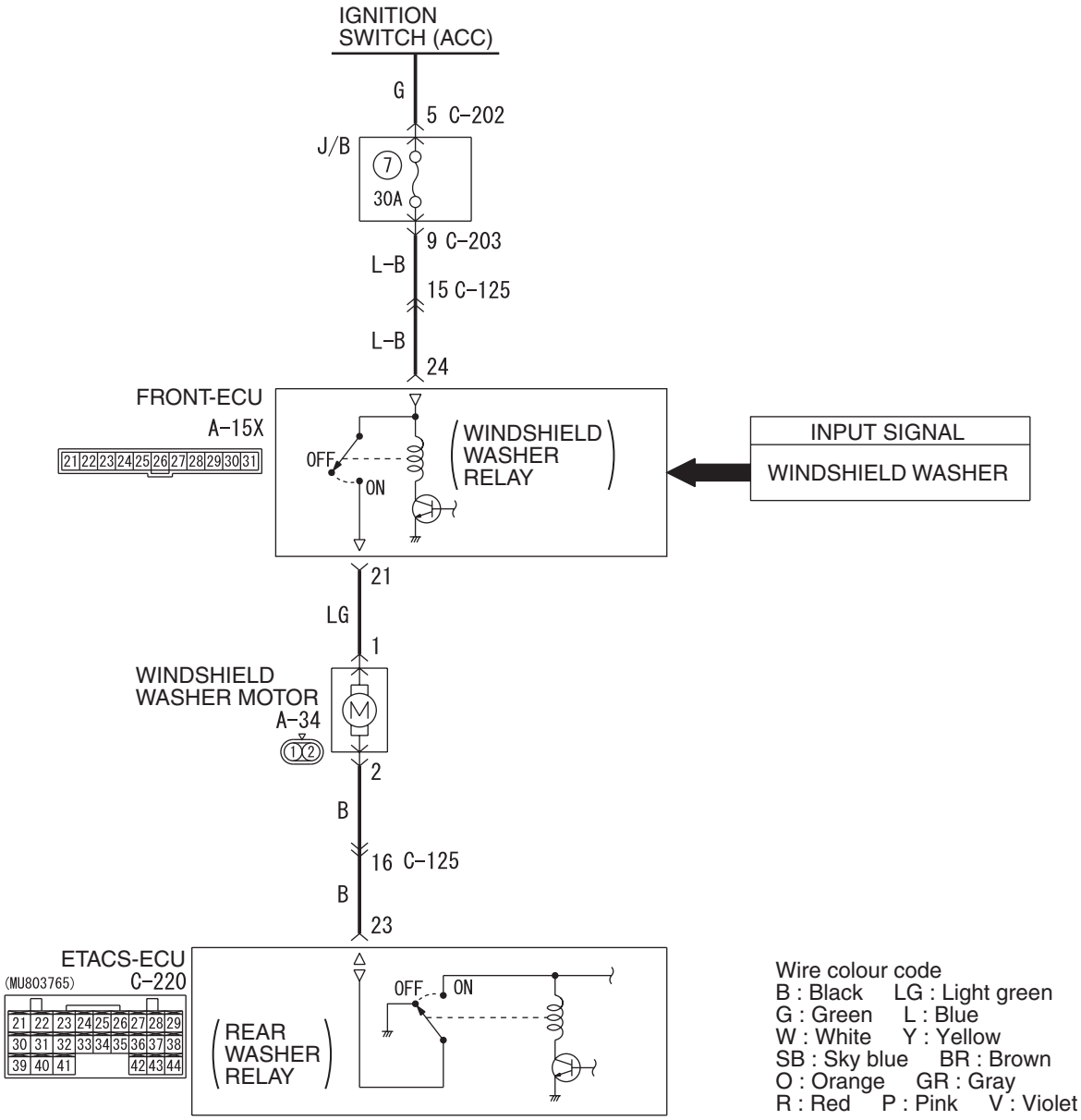

W4X54E154A

COMMENTS ON TROUBLE SYMPTOM

The windshield washer motor, the column switch, the front-ECU or the ETACS-ECU may be defective.

POSSIBLE CAUSES

- Malfunction of the windshield washer motor
- Malfunction of the column switch
- Malfunction of the front-ECU
- Malfunction of the ETACS-ECU
- Damaged harness wires and connectors

Main Index
Group TOC

DIAGNOSIS PROCEDURE

Step 1. Check the operation of the windshield wipers.
Check that the windshield wipers work normally.

Q: Is the check result normal?
YES : Go to Step 2.
NO : Refer to Inspection Procedure G-1 "The windshield wipers do not work at all P.54C-161."

Step 2. ECU check by using the SWS monitor.
Check that the power supply and earth lines to the column switch (column-ECU) and the front-ECU and the SWS communication lines are normal.
- Turn the ignition switch to the ACC position.

ECUS TO BE CHECKED
- COLUMN ECU
- FRONT ECU
- ETACS ECU

OK: "OK" are displayed for all the items

Q: Are the check result normal?
"OK" are displayed for all the items : Go to Step 3.
"NG" is displayed on the "COLUMN ECU" menu. : Refer to Inspection Procedure A-2 "Communication with column switch (column-ECU) is not possible P.54C-45."
"NG" is displayed on the "FRONT ECU" menu. : Refer to Inspection Procedure A-4 "Communication with front-ECU is not possible P.54C-58."
"NG" is displayed on the "ETACS ECU" menu. : Refer to Inspection Procedure A-3 "Communication with ETACS-ECU is not possible P.54C-51."

Step 3. Function diagnosis by using the SWS monitor.
Check the SWS communication signal, which are related to the windshield washer function.

<Selected item> F.WIPER WASH
- Turn the ignition switch to the ACC position.
- Windshield washer switch: ON

Item No.	Item name	Normal condition
Item 09	FRONT WASH. SW	ON

OK: Normal condition is displayed.

Q: Is the check result normal?
YES : Go to Step 4.
NO : Replace the column switch.

Step 4. Connector check: A-34 windshield washer motor connector

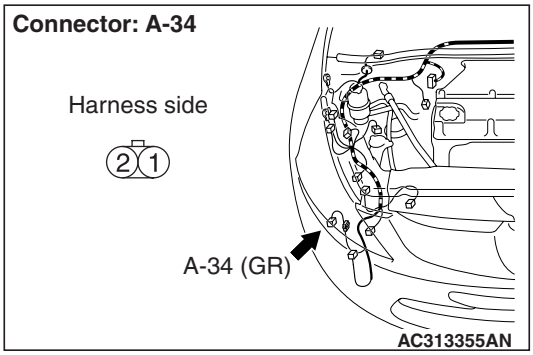

Q: Is the check result normal?
YES : Go to Step 5.
NO : Repair the connector.

Step 5. Check the windshield washer motor assembly.
Refer to GROUP 51 – Windshield washer P.51-23.

Q: Is the check result normal?
YES : Go to Step 6.
NO : Replace the windshield washer motor.

Main Index
Group TOC

Step 6. Connector check:C-220 ETACS-ECU connector.

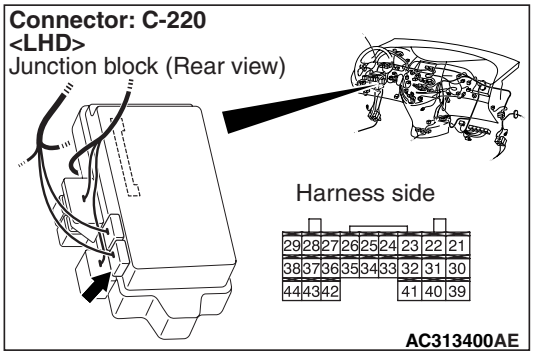

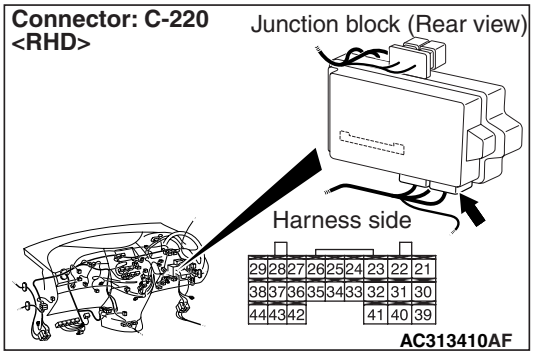

Q: Is the check result normal?

YES : Go to Step 7.

NO : Repair the connector.

Step 7. Check the wiring harness between A-34 windshield washer motor connector terminal No.2 to C-220 ETACS-ECU connector terminal No.23.

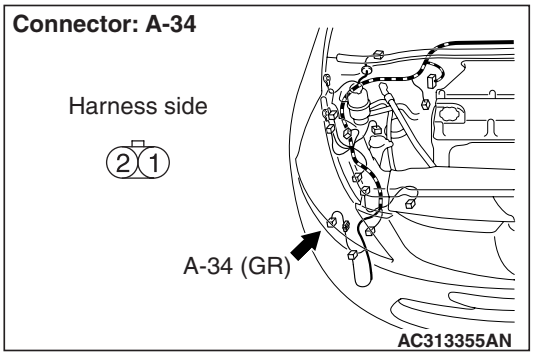

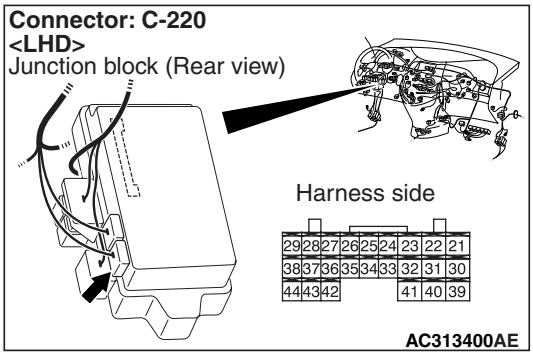

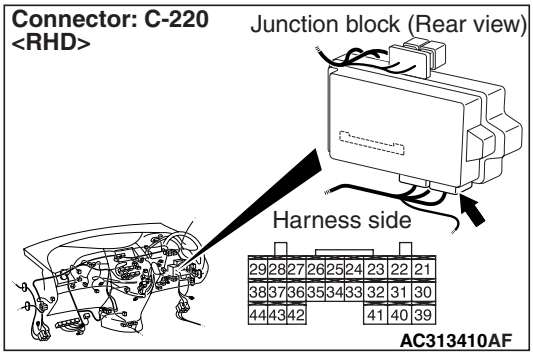

NOTE:

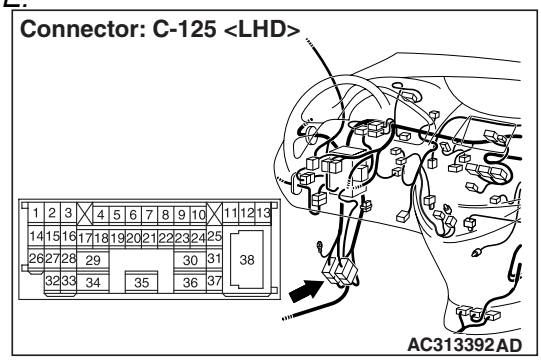

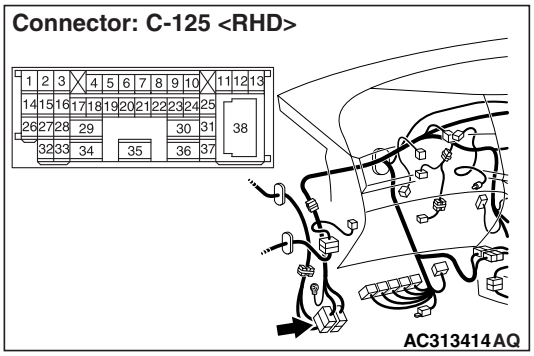

Prior to the wiring harness inspection, check the intermediate connector C-125 and repair if necessary.

- Check the earth wires for open circuit.

Q: Is the check result normal?
YES : Go to Step 8.
NO : Repair the wiring harness.

Step 8. Connector check: A-15X front-ECU connector.

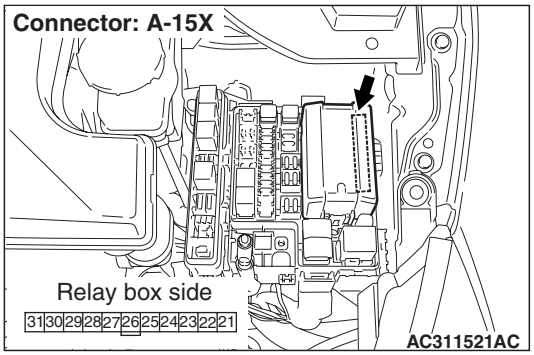

Q: Is the check result normal?
YES : Go to Step 9.
NO : Repair the connector.

Step 9. Check the wiring harness between A-34 windshield washer motor connector terminal No.1 to A-15X front-ECU connector terminal No.21.

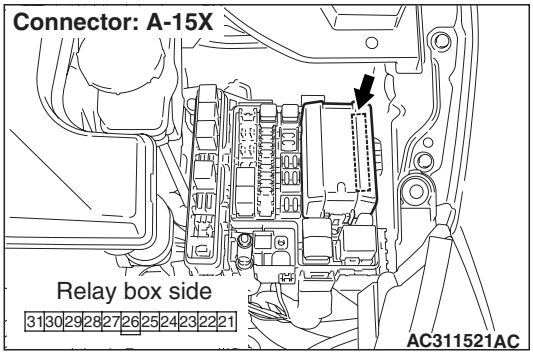

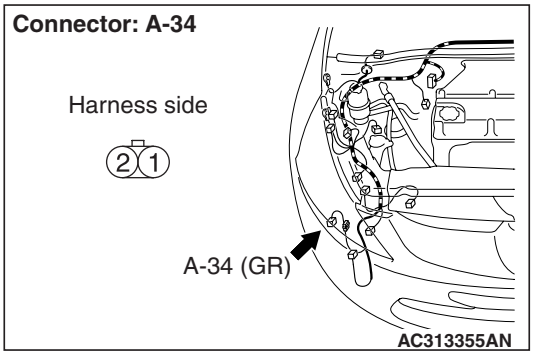

- Check the power supply line for open circuit.

Q: Is the check result normal?
YES : Go to Step 10.
NO : Repair the wiring harness.

Step 10. Replace the front ECU, and then check its operation.

Replace the front ECU, and then check that the windshield washer works normally.
(1) Replace the front ECU.
(2) Ignition switch: ON
(3) The windshield washer should now work normally.

Q: Is the check result satisfactory?
YES : The trouble can be an intermittent malfunction (Refer to GROUP 00 – How to Cope with Intermittent Malfunction P.00-5).
NO : Replace the ETACS-ECU.

Main Index
Group TOC

REAR WIPER AND WASHER

INSPECTION PROCEDURE H-1: The rear wiper does not work at all.

⚠ CAUTION
Whenever the ECU is replaced, ensure that the input and output signal circuits are normal.

Rear Wiper Drive Circuit

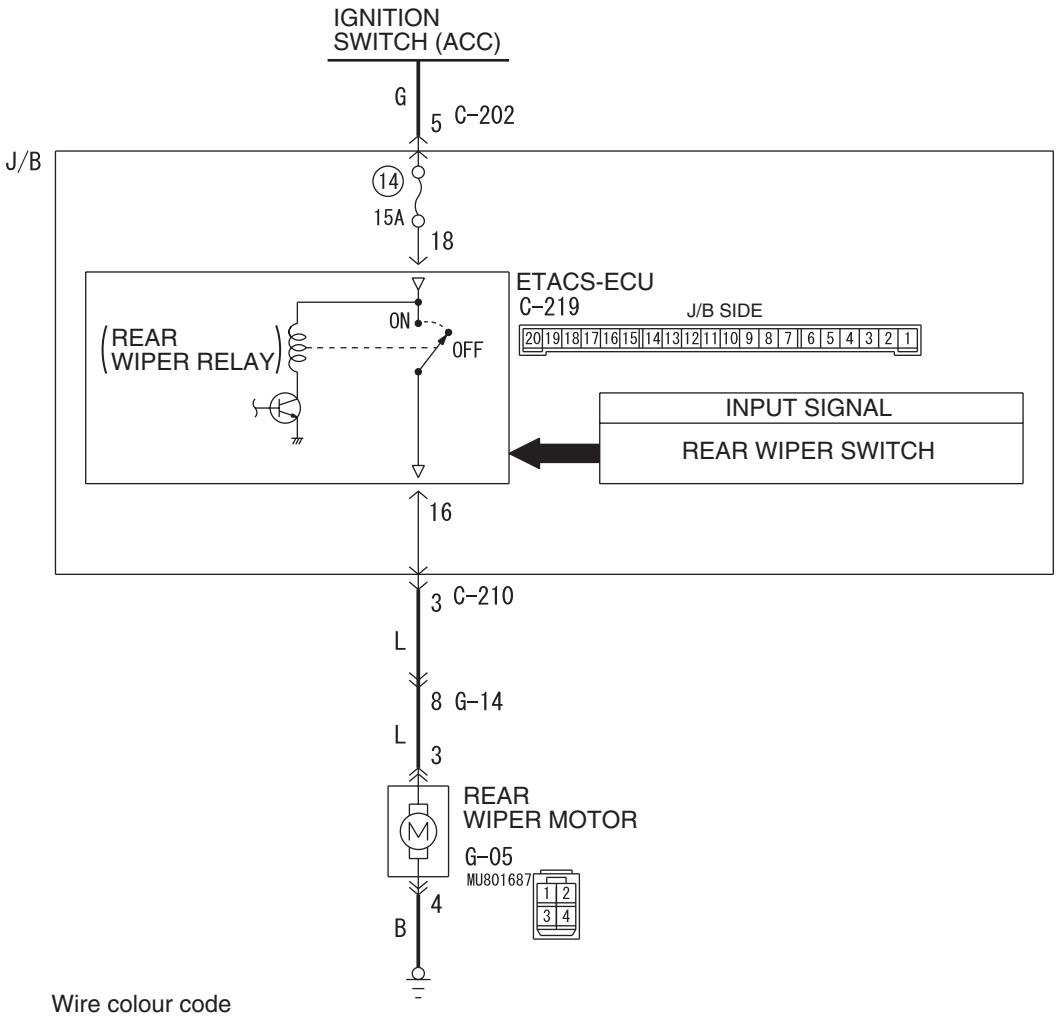

Wire colour code
B : Black LG : Light green G : Green L : Blue W : White Y : Yellow SB : Sky blue
BR : Brown O : Orange GR : Gray R : Red P : Pink V : Violet

W4X54E087A

COMMENTS ON TROUBLE SYMPTOM

If the rear wiper does not work normally, the input signal circuits to the components below, the rear wiper motor or the ETACS-ECU may be defective.

- Ignition switch (ACC)
- Rear wiper switch

POSSIBLE CAUSES

- Malfunction of the rear wiper motor
- Malfunction of the column switch
- Malfunction of the ETACS-ECU
- Damaged harness wires and connectors

Main Index
Group TOC

DIAGNOSIS PROCEDURE

Step 1. ECU check by using the SWS monitor.
Check that the power supply and earth lines to the column switch (column-ECU) and the ETACS-ECU and the SWS communication lines are normal.
- Ignition switch: ACC

ECUS TO BE CHECKED
- COLUMN ECU
- ETACS ECU

OK: "OK" are displayed for all the items

Q: Are the check result normal?
"OK" are displayed for all the items : Go to Step 2.
"NG" is displayed on the "COLUMN ECU" menu. : Refer to Inspection Procedure A-2 "Communication with column switch (column-ECU) is not possible P.54C-45."
"NG" is displayed on the "ETACS ECU" menu. : Refer to Inspection Procedure A-3 "Communication with ETACS-ECU is not possible P.54C-51."

Step 2. Function diagnosis by using the SWS monitor
Check the SWS communication signal, which are related to the rear wiper function.

<Selected item> REAR WIPER
- Ignition switch: ACC
- Rear wiper switch: ON

Item No.	Item name	Normal condition
Item 13	REAR WIPER SW	ON
Item 31	IG SW (ACC)	ON

OK: Normal conditions are displayed for all the items.

Q: Are the check result normal?
Normal conditions are displayed for all the items : Go to Step 3.
Normal condition is not displayed for item No.13 : Replace the column switch.
Normal condition is not displayed for item No.31 : Refer to inspection procedure P-1 "The ignition switch (ACC) signal is not received P.54C-332."

Step 3. Connector check: G-05 rear wiper motor connector.

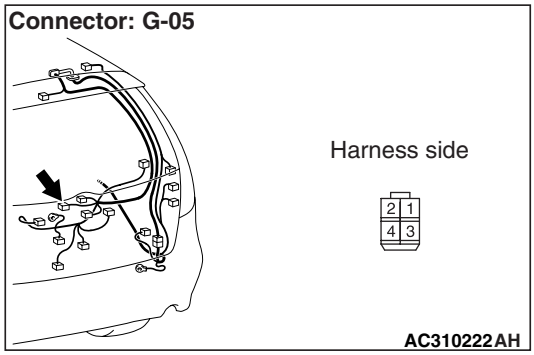

Q: Is the check result normal?
YES : Go to Step 4.
NO : Repair the connector.

Step 4. Check the rear wiper motor.
Refer to GROUP 51 – Rear wiper and washer P.51-27.

Q: Is the check result normal?
YES : Go to Step 5.
NO : Replace the rear wiper motor.

Main Index
Group TOC

Step 5. Resistance measurement at the G-05 rear wiper motor connector.

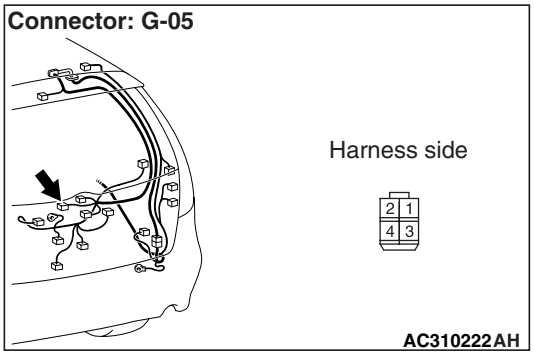

(1) Disconnect the connector, and measure at the wiring harness side.

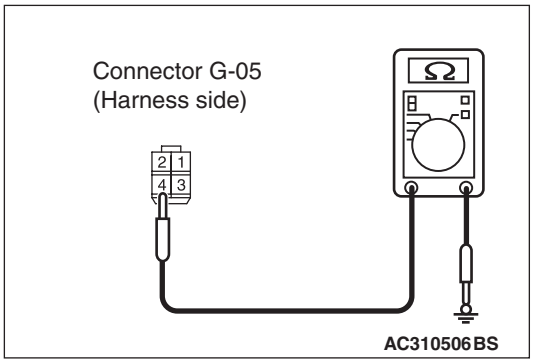

(2) Resistance between G-05 rear wiper motor connector terminal No.4 and body earth

OK: 2 Ω or less

Q: Is the check result normal?

YES : Go to Step 7.

NO : Go to Step 6.

Step 6. Check the wiring harness between G-05 rear wiper motor connector terminal No.4 and body earth.

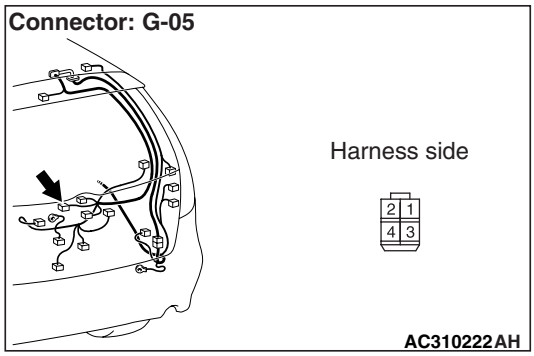

- Check the earth line for open or short circuit.

Q: Is the check result normal?

YES : The trouble can be an intermittent malfunction (Refer to GROUP 00 – How to Cope with Intermittent Malfunction P.00-5).

NO : Repair the wiring harness.

Step 7. Connector check: C-219 ETACS-ECU connector.

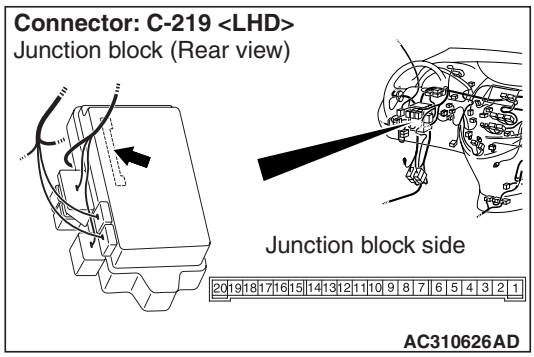

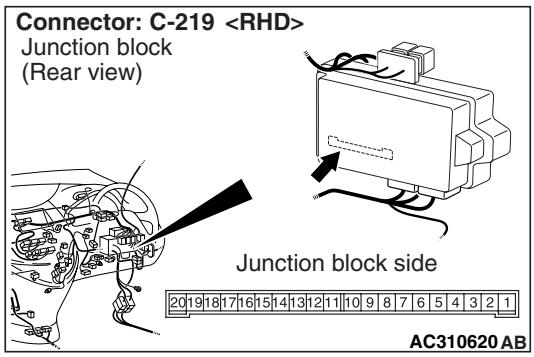

Q: Is the check result normal?

YES : Go to Step 8.

NO : Repair the connector.

Main Index
Group TOC

Step 8. Check the wiring harness between C-219 ETACS-ECU connector terminal No.16 and G-05 rear wiper motor connector terminal No.3.

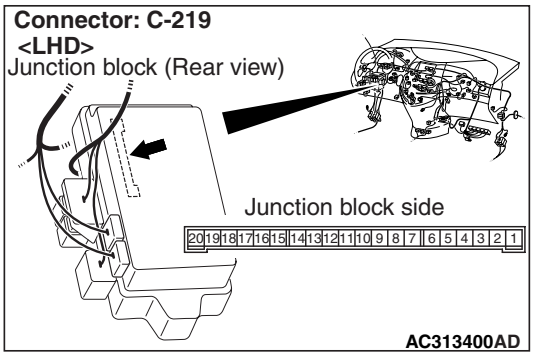

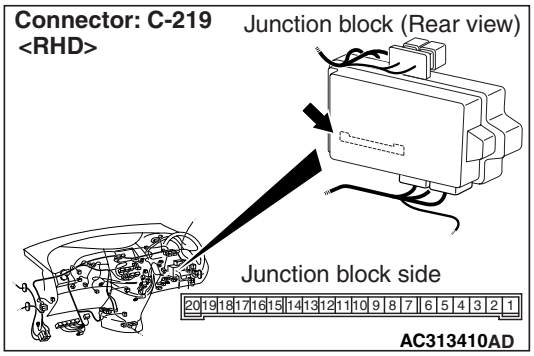

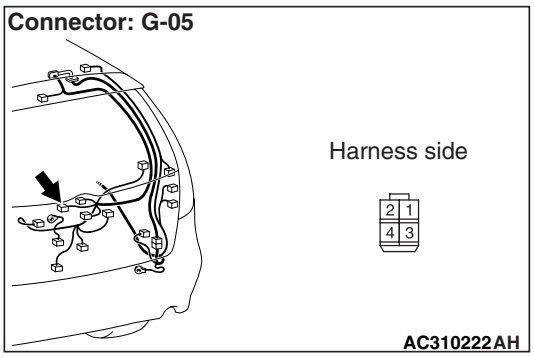

NOTE:

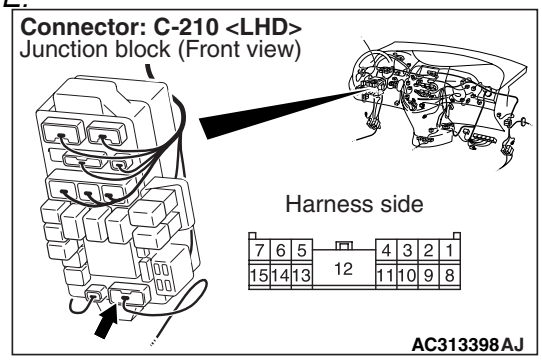

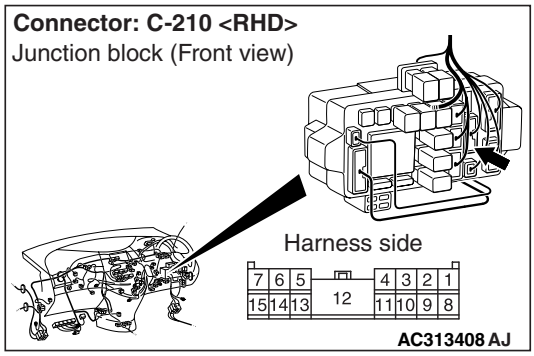

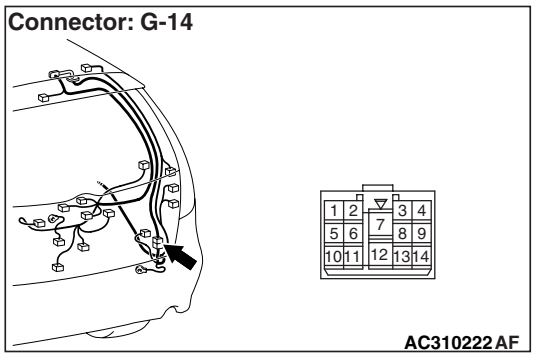

Prior to the wiring harness inspection, check intermediate connector G-14 and junction block connectors C-210, and repair if necessary.

- Check the output line.

Q: Is the check result normal?

YES : Go to Step 9.

NO : Repair the wiring harness.

Step 9. Retest the system.

Check that the rear wiper works normally.

Q: Is the check result normal?

YES : The trouble can be an intermittent malfunction (Refer to GROUP 00 – How to Cope with Intermittent Malfunction P.00-5).

NO : Replace the ETACS-ECU.

Main Index
Group TOC

INSPECTION PROCEDURE H-2: The rear wiper does not stop at the specified park position.

⚠ CAUTION
Whenever the ECU is replaced, ensure that the input and output signal circuits are normal.

Rear Wiper Auto-stop Signal Input

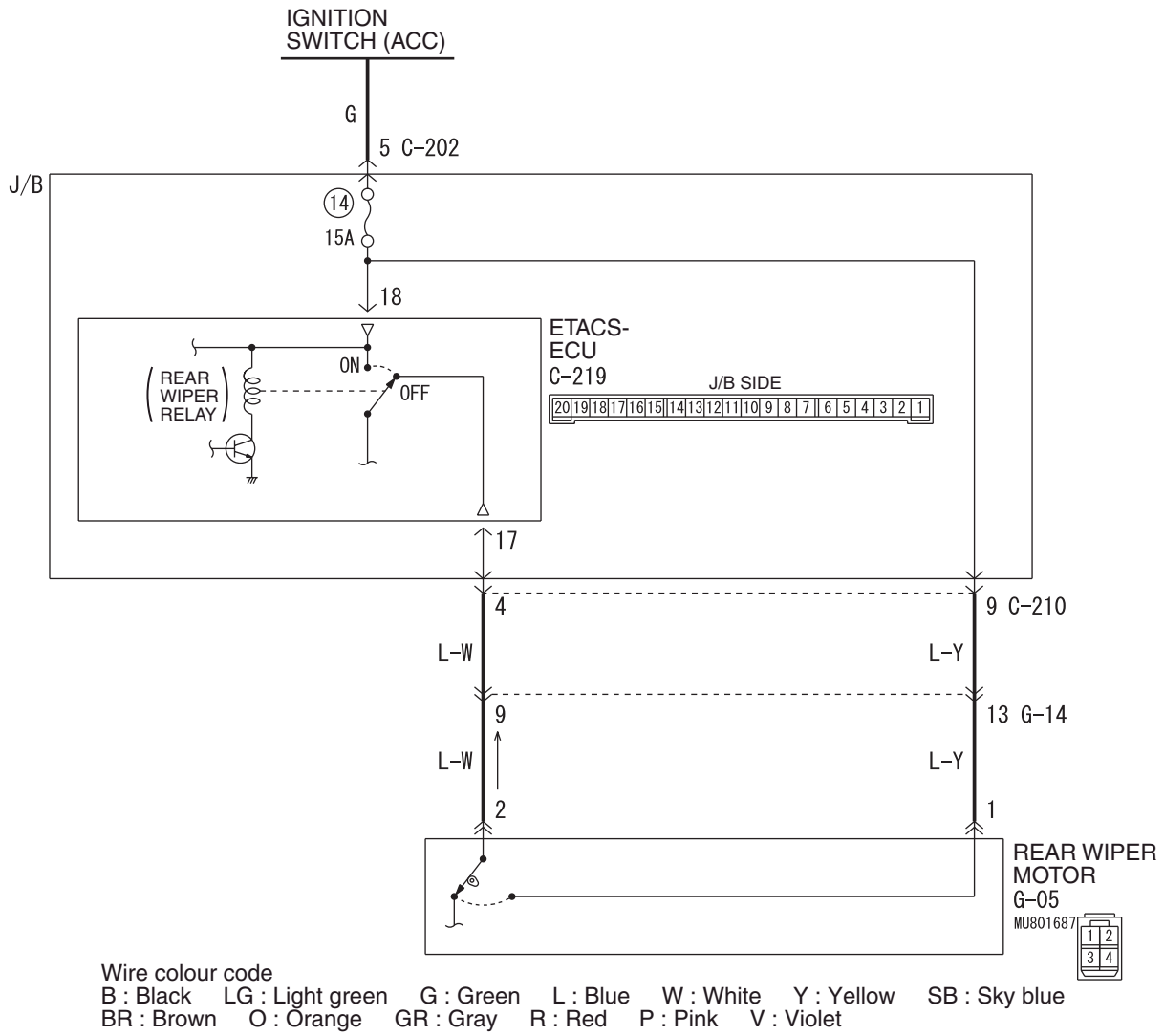

W4X54E088A

COMMENTS ON TROUBLE SYMPTOM

If the rear wiper does not stop normally within the predetermined range, the rear wiper motor or the ETACS-ECU may be defective.

POSSIBLE CAUSES

- Malfunction of the rear wiper motor
- Malfunction of the ETACS-ECU
- Damaged harness wires and connectors

Main Index
Group TOC

DIAGNOSIS PROCEDURE

Step 1. Connector check: G-05 rear wiper motor connector.

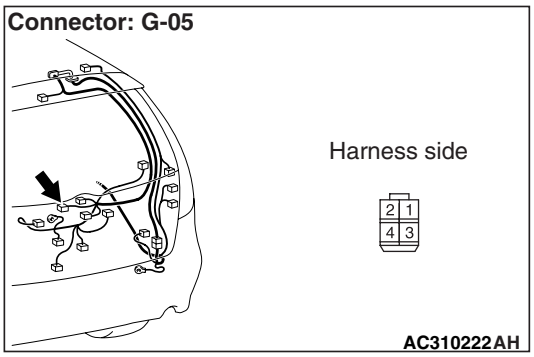

Q: Is the check result normal?
YES : Go to Step 2.
NO : Repair the connector.

Step 2. Check the rear wiper motor.
Refer to GROUP 51 – Rear wiper and washer P.51-27.

Q: Is the check result normal?
YES : Go to Step 3.
NO : Replace the rear wiper motor.

Step 3. Voltage measurement at the G-05 rear wiper motor connector.

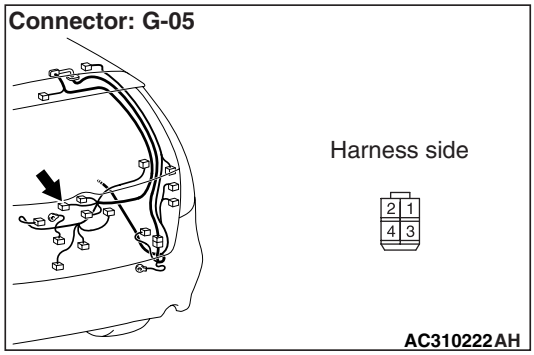

(1) Disconnect the connector, and measure at the wiring harness side.
(2) Ignition switch: ACC

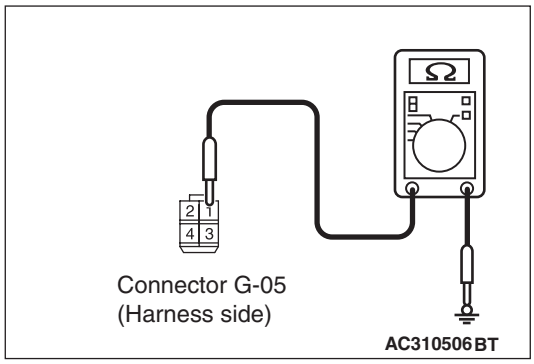

(3) Check the voltage between G-05 rear wiper motor connector terminal No.1 and body earth

OK: System voltage

Q: Is the check result normal?
YES : Go to Step 5.
NO : Go to Step 4.

Main Index
Group TOC

Step 4. Check the wiring harness between ignition switch (ACC) and G-05 rear wiper motor connector terminal No.1.

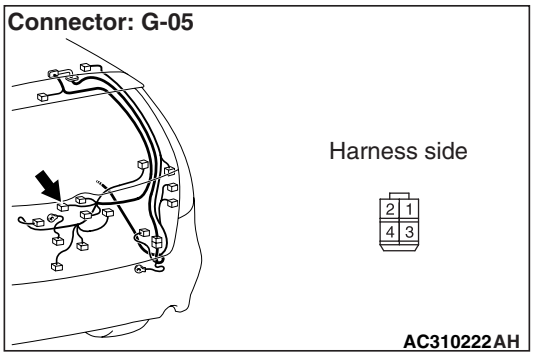

NOTE:

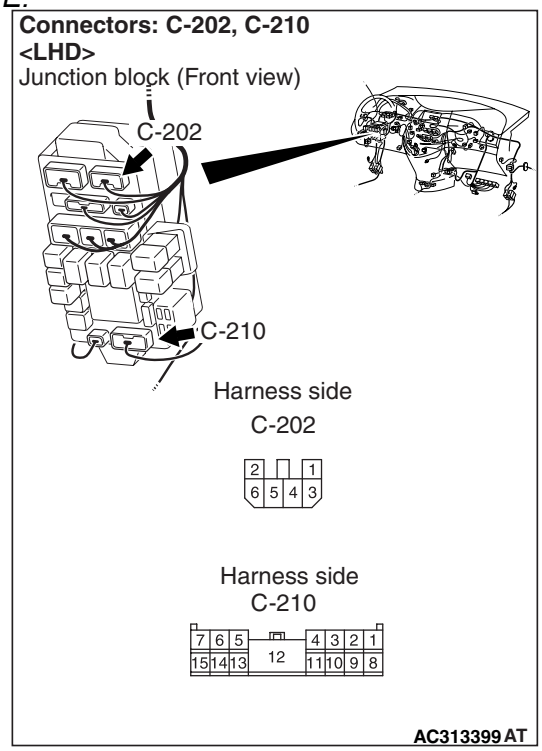

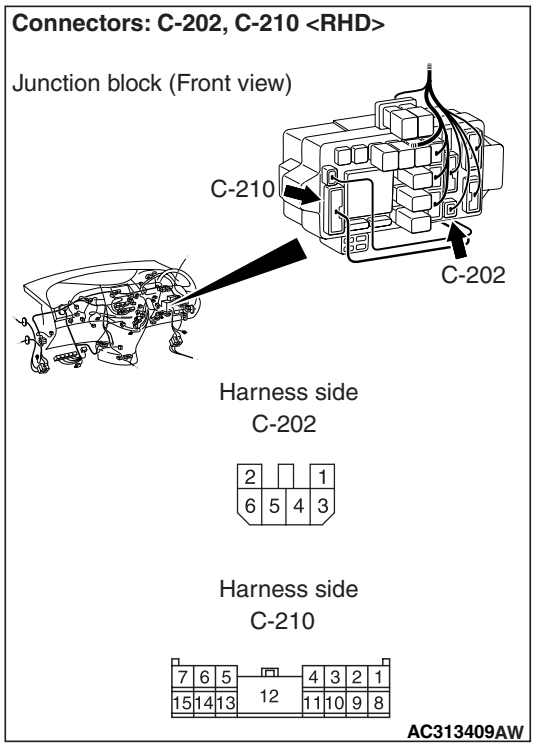

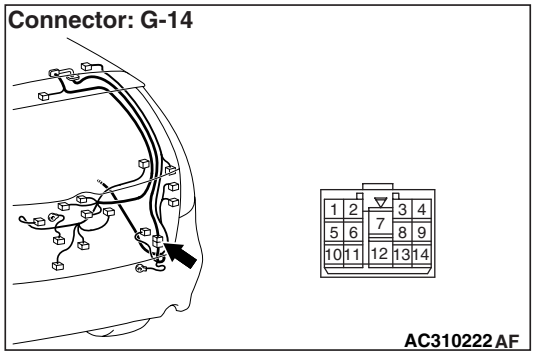

Prior to the wiring harness inspection, check intermediate connector G-14 and junction block connectors C-202, C-210, and repair if necessary.

- Check the power supply line for open or short circuit.

Q: Is the check result normal?

YES : The trouble can be an intermittent malfunction (Refer to GROUP 00 – How to Cope with Intermittent Malfunction P.00-5).

NO : Repair the wiring harness.

Step 5. Connector check: C-219 ETACS-ECU connector.

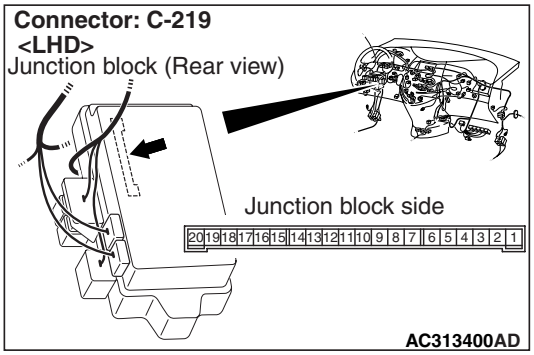

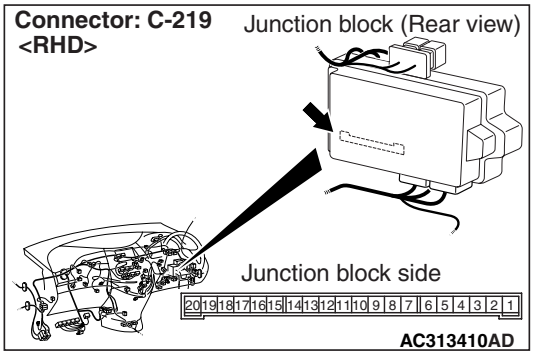

Q: Is the check result normal?

YES : Go to Step 6.

NO : Repair the connector.

Step 6. Check the wiring harness between C-219 ETACS-ECU connector terminal No.17 and G-05 rear wiper motor connector terminal No.2.

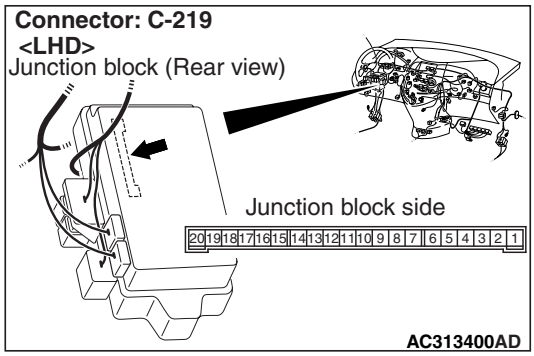

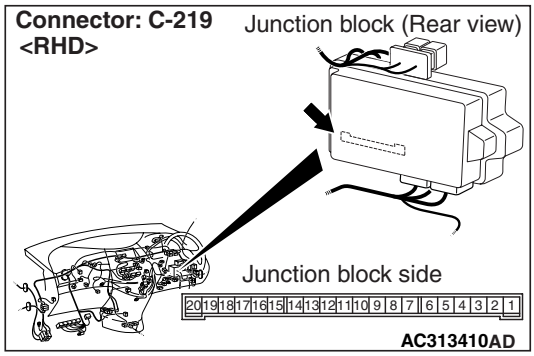

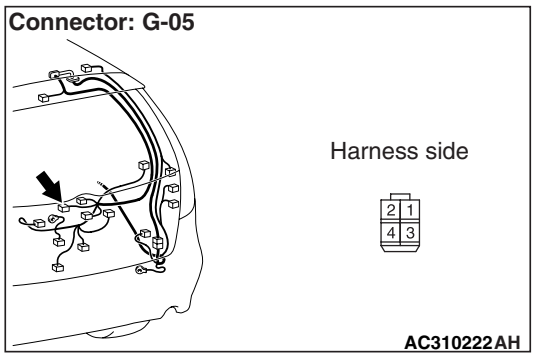

NOTE:

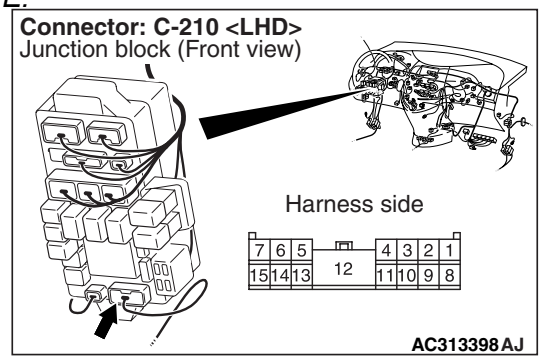

Main Index
Group TOC

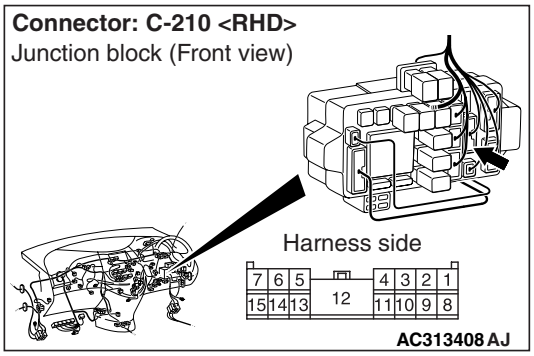

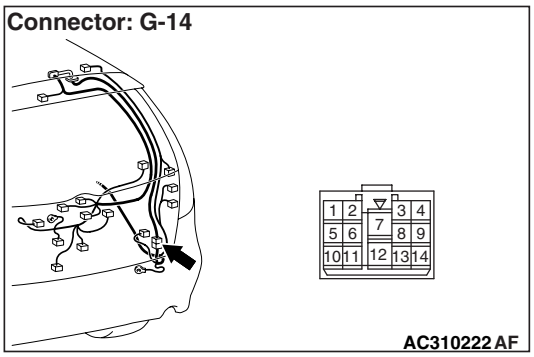

Prior to the wiring harness inspection, check intermediate connector G-14, junction block connectors C-210, and repair if necessary.

- Check the power supply line for open or short circuit.

Q: Is the check result normal?

YES : Go to Step 7.

NO : Repair the wiring harness.

Step 7. ETACS switch data by using the SWS monitor.

- Ignition switch:ACC or ON
- Operate the rear wiper

Item No.	Item name	Normal condition
Item 09	Rear wiper auto stop switch	ON

NOTE: Confirm that the M.U.T.-III displays from "ON" to "OFF" when rear wiper stops at the predetermined park position.

OK: Normal conditions is displayed for all the items.

Q: Is the check result normal?

YES : The trouble can be an intermittent malfunction (Refer to GROUP 00 – How to Cope with Intermittent Malfunction P.00-5).

NO : Replace the ETACS-ECU.

Main Index
Group TOC

INSPECTION PROCEDURE H-3: When the selector lever is moved to "R" position during the rear wiper operation, the rear wiper does not operate at the continuous mode. <A/T>

⚠ CAUTION
Whenever the ECU is replaced, ensure that the input and output signal circuits are normal.

"R" Position During Wiper Operation Circuit <A/T>

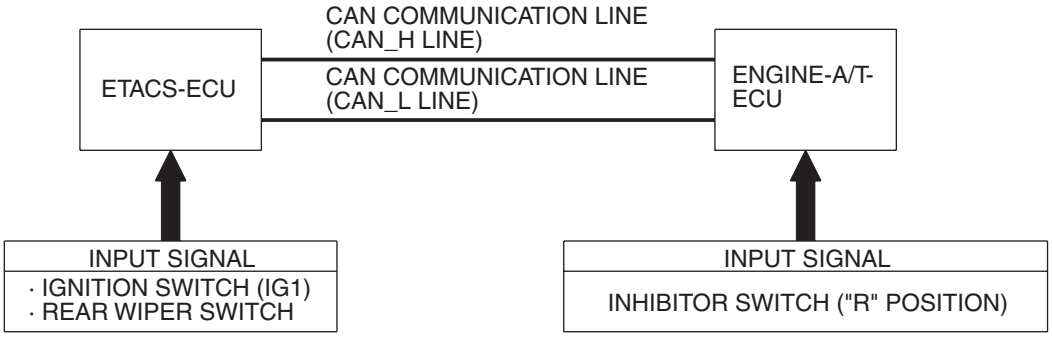

W4X54E176A

COMMENTS ON TROUBLE SYMPTOM

If the rear wiper does not operate consecutively when the selector lever is moved to the R position during the rear wiper operation, the shift position input signal circuit or the ETACS-ECU may be defective.

POSSIBLE CAUSES

- Malfunction of the engine-A/T-ECU
- Malfunction of the ETACS-ECU
- Damaged harness wires and connectors

DIAGNOSIS PROCEDURE

Step 1. M.U.T.-III CAN bus diagnostics
Use the M.U.T.-III to diagnose the CAN bus lines.

Q: Is the check result normal?
YES : Go to Step 2.
NO : Repair the CAN bus line (Refer to GROUP 54F, Diagnosis P.54F-13).

Step 2. Check the operation of the rear wiper.
Check that the rear wiper system should work normally by operating the rear wiper switch.

Q: Is the check result normal?
YES : Go to Step 3.
NO : Refer to Inspection Procedure H-1 "The rear wiper does not work at all P.54C-180."

Step 3. Pulse check.
Check the input signal, which are related to the R (reverse) gear-linked rear wiper operation.

System switch	Check condition
Inhibitor switch (reverse position)	When the ignition switch is turned ON and the selector lever is moved to the R position.

OK: The M.U.T.-III sounds or the voltmeter needle fluctuates.

Q: Is the check result normal?
YES : Go to Step 4.
NO : Refer to diagnosis code No.11 inspection procedure "Engine-A/T-ECU time-out (related to engine) P.54C-25 ."

Step 4. Retest the system.
Check that the rear wiper operates consecutively when the selector lever is moved to the R position during the rear wiper operation.

Q: Is the check result normal?
YES : The trouble can be an intermittent malfunction (Refer to GROUP 00 – How to Cope with Intermittent Malfunction P.00-5).
NO : Replace the ETACS-ECU.

Main Index
Group TOC

INSPECTION PROCEDURE H-3: When the shift lever is moved to "R" position during the rear wiper operation, the rear wiper does not operate at the continuous mode. <M/T>

⚠ CAUTION
Whenever the ECU is replaced, ensure that the input and output signal circuits are normal.

"R" Position During Rear Wiper Operation Circuit <M/T>

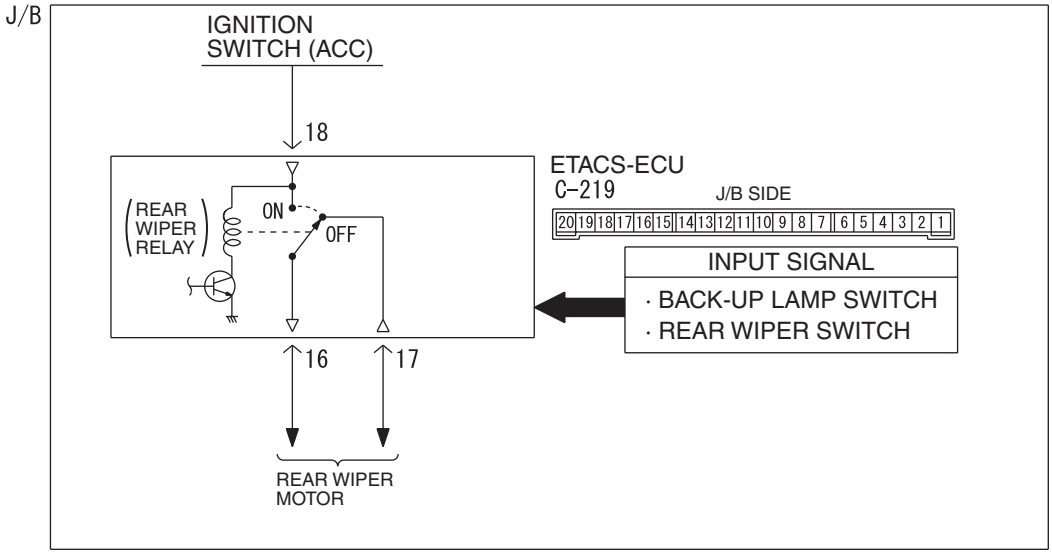

W4X54E089A

COMMENTS ON TROUBLE SYMPTOM

If the rear wiper does not operate consecutively when the selector lever is moved to the R position during the rear wiper operation, the input signal circuit to the back-up lamp switch ("R" position) or the ETACS-ECU may be defective.

POSSIBLE CAUSES

- Malfunction of the back-up lamp switch
- Malfunction of the ETACS-ECU
- Damaged harness wires and connectors

Step 1. Check the operation of the rear wiper.
Check that the rear wiper system should work normally by operating the rear wiper switch.

Q: Is the check result normal?
YES : Go to Step 2.
NO : Refer to Inspection Procedure H-1 "The rear wiper does not work at all P.54C-180."

Step 2. SWS monitor data list.
Check the SWS communication signal, which are related to the R (reverse) gear-linked rear wiper operation.

<Selected item> REAR WIPER-REV. INTERLOCK
- Ignition switch: ON
- Rear wiper switch: ON
- Shift position: R position

Item No.	Item name	Normal condition
Item 41	INHIBITOR SW	ON

OK: Normal condition is displayed.

Q: Is the check result normal?
YES : Go to Step 3.
NO : Refer to inspection procedure P-3 "The back-up lamp switch <M/T> signal is not received P.54C-338"

Main Index
Group TOC

Step 3. Retest the system.
Check that the rear wiper operates consecutively when the shift lever is moved to the R position during the rear wiper operation.

Q: Is the check result normal?
YES : The trouble can be an intermittent malfunction (Refer to GROUP 00 – How to Cope with Intermittent Malfunction P.00-5).
NO : Replace the ETACS-ECU.

INSPECTION PROCEDURE H-4: The rear washer does not work.

⚠ CAUTION
Whenever the ECU is replaced, ensure that the input and output signal circuits are normal.

Rear Washer Drive Circuit

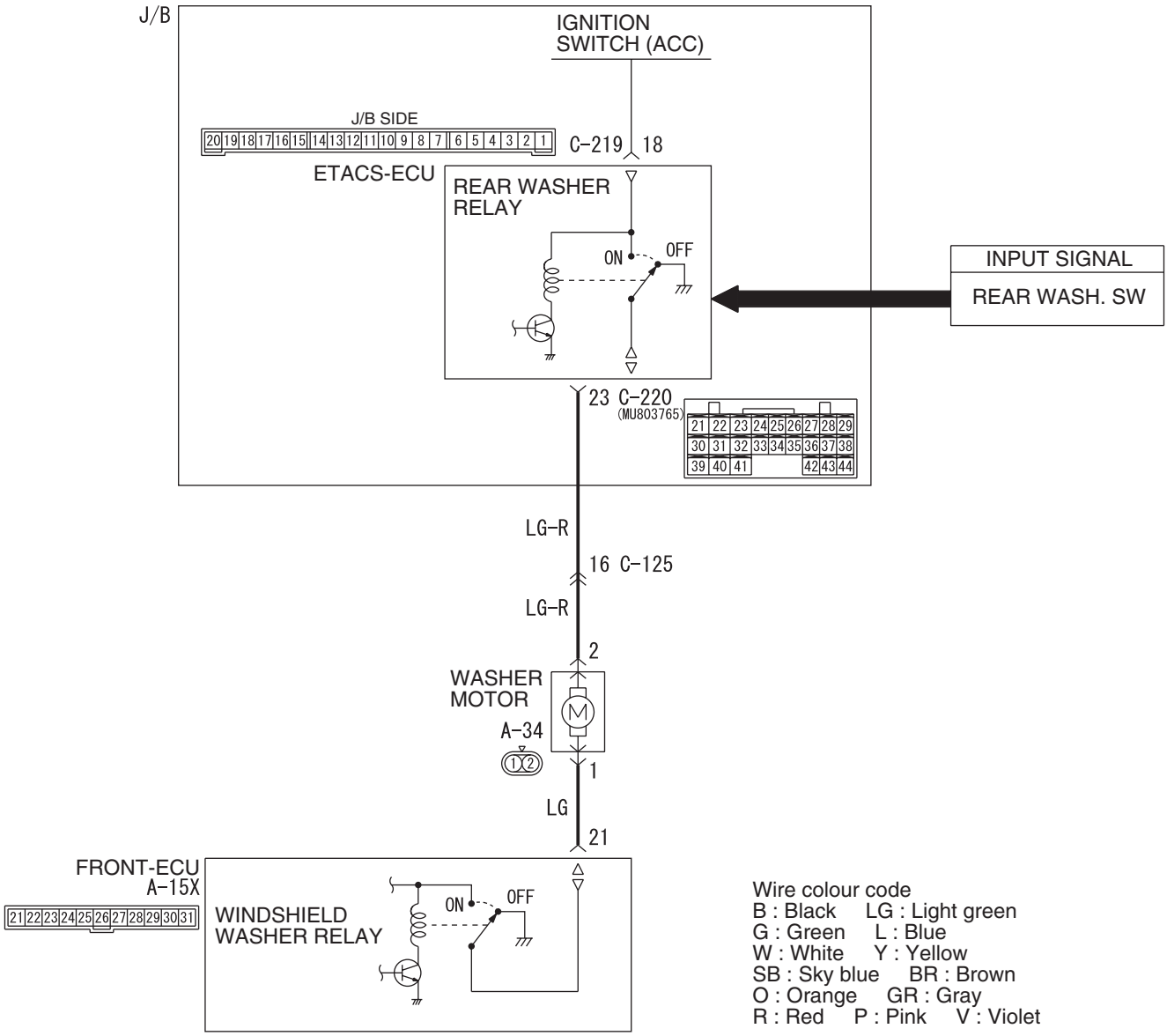

Main Index
Group TOC

COMMENTS ON TROUBLE SYMPTOM

If the rear washer does not work normally, the input signal circuits to the rear washer switch, rear washer motor, the column switch, the front-ECU or the ETACS-ECU may be defective.

POSSIBLE CAUSES

- Malfunction of the rear washer motor
- Malfunction of the column switch
- Malfunction of the ETACS-ECU
- Malfunction of the front-ECU
- Damaged harness wires and connectors

DIAGNOSIS PROCEDURE

Step 1. Confirm the operation of the rear wiper.
Check that the rear wiper work normally.

Q: Is the check result normal?
YES : Go to Step 2.
NO : Refer to Inspection Procedure H-1 "The rear wiper does not work at all P.54C-180."

Step 2. ECU check by using the SWS monitor.
Check that the power supply and earth lines to the column switch (column-ECU) and the front-ECU and the SWS communication lines are normal.

- Turn the ignition switch to the ACC position.

ECUS TO BE CHECKED

- Column ECU
- ETACS ECU
- Front ECU

OK: "OK" are displayed for all the items

Q: Are the check result normal?
"OK" are displayed for all the items : Go to Step 3.
"NG" is displayed on the "COLUMN ECU" menu. : Refer to Inspection Procedure A-2 "Communication with column switch (column-ECU) is not possible P.54C-45."
"NG" is displayed on the "ETACS ECU" menu. : Refer to Inspection Procedure A-3 "Communication with ETACS-ECU is not possible P.54C-51."
"NG" is displayed on the "FRONT ECU" menu. : Refer to Inspection Procedure A-4 "Communication with front-ECU is not possible P.54C-58."

Step 3. Function diagnosis by using the SWS monitor.
Check the SWS communication signal, which are related to the rear washer function.

<Selected item> REAR WIPER-REAR WASHER

- Ignition switch: ACC
- Rear washer switch: ON

Item No.	Item name	Normal condition
Item 14	REAR WASH. SW	ON

OK: Normal condition is displayed.

Q: Is the check result normal?
YES : Go to Step 4.
NO : Refer to inspection procedure P-7 "The column switch (windshield wiper washer and rear wiper washer switch) signal is not received P.54C-353."

Step 4. Connector check: A-34 washer motor connector.

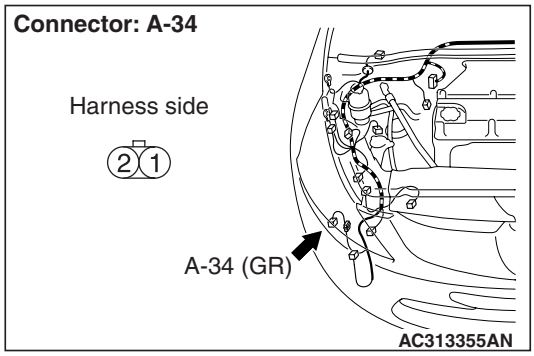

Q: Is the check result normal?
YES : Go to Step 5.
NO : Repair the connector.

Step 5. Check the washer motor.
Refer to GROUP 51 – Rear wiper and washer P.51-27.

Q: Is the check result normal?
YES : Go to Step 6.
NO : Replace the rear washer motor.

Step 6. Connector check: A-15X front-ECU connector.

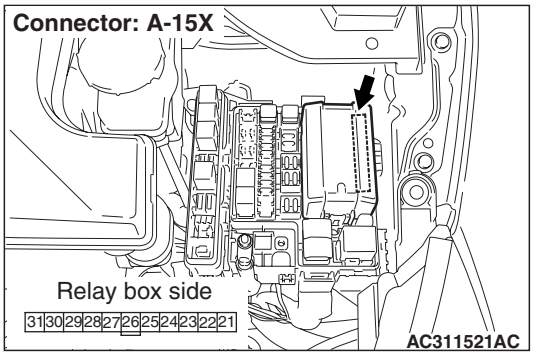

Q: Is the check result normal?
YES : Go to Step 7.
NO : Repair the connector.

Step 7. Check the wiring harness between A-34 rear washer motor connector terminal No.1 to A-15X front ECU connector terminal No.21.

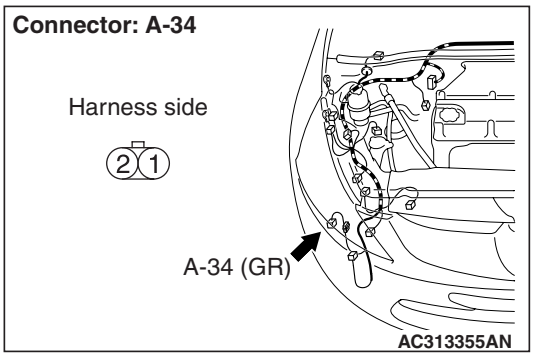

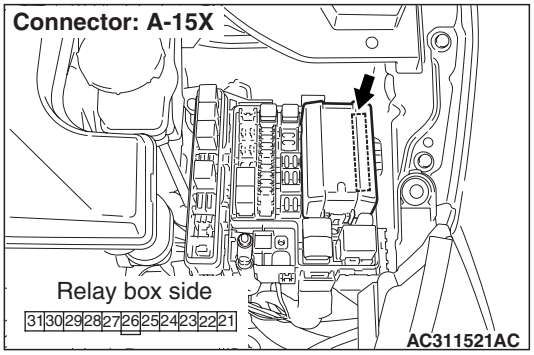

- Check the earth line for open or short circuit.

Q: Is the check result normal?
YES : Go to Step 8.
NO : Repair the wiring harness.

Step 8. Connector check: C-220 ETACS-ECU connector.

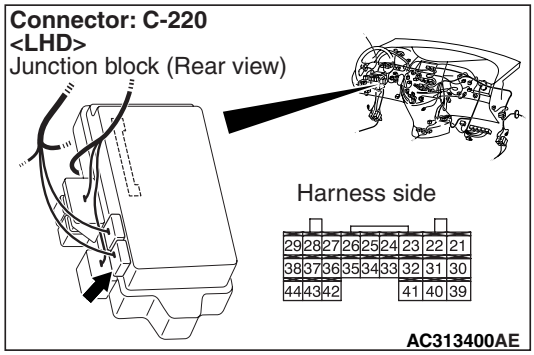

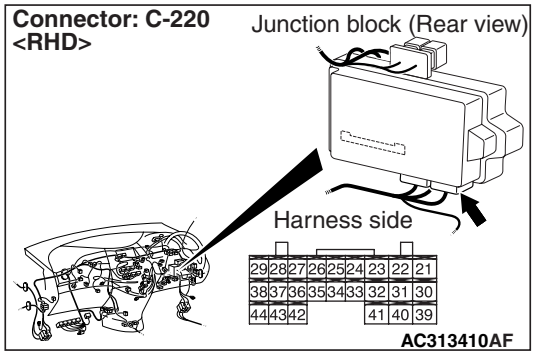

Q: Is the check result normal?
YES : Go to Step 9.
NO : Repair the connector.

Main Index
Group TOC

Step 9. Check the wiring harness between C-220 ETACS-ECU connector terminal No.23 to A-34 washer motor connector terminal No.2.

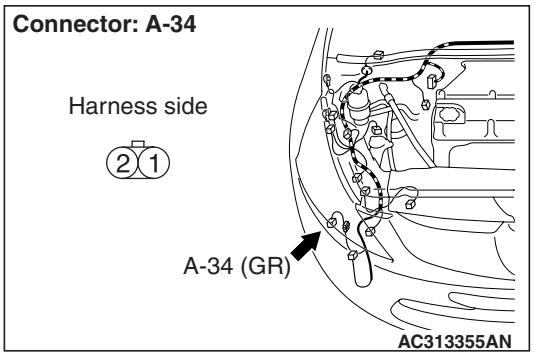

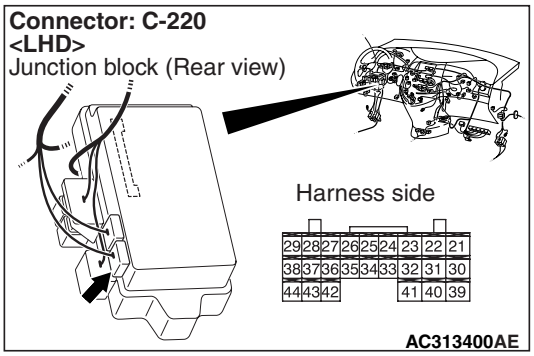

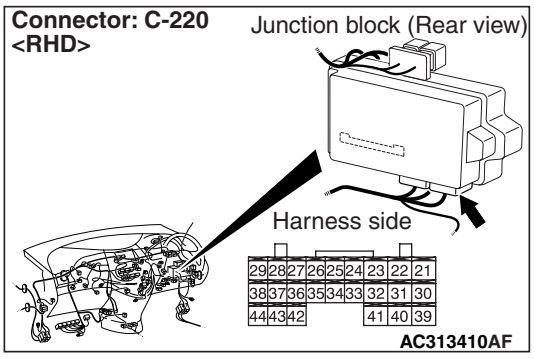

NOTE:

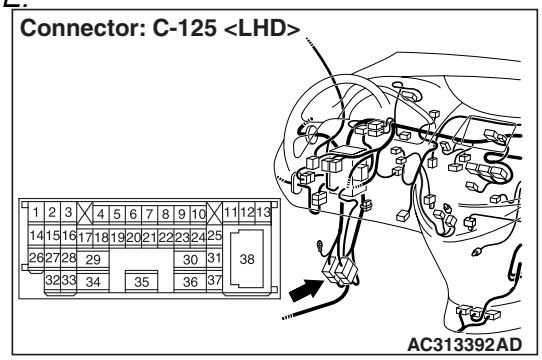

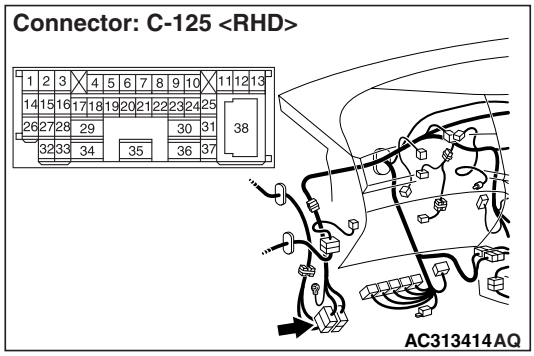

Prior to the wiring harness inspection, check intermediate connector C-125, and repair if necessary.

- Check the output signal line.

Q: Is the check result normal?

YES : Go to Step 10.

NO : Repair the wiring harness.

Step 10. Replace the ETACS-ECU, and then check its operation.

Replace the ETACS-ECU, and then check that the rear washer works normally.

(1) Replace the ETACS-ECU.

(2) Ignition switch: ON

(3) The rear washer should now work normally.

Q: Is the check result satisfactory?

YES : The trouble can be an intermittent malfunction (Refer to GROUP 00 – How to Cope with Intermittent Malfunction P.00-5).

NO : Replace the front ECU.

Main Index
Group TOC

ELECTRIC RETRACTABLE REMOTE CONTROLLED DOOR MIRROR

INSPECTION PROCEDURE I-1: Electric retractable remote controlled door mirror does not work at all.

⚠ CAUTION

Whenever the ECU is replaced, ensure that the input and output signal circuits are normal.

Door Mirror Relay Circuit

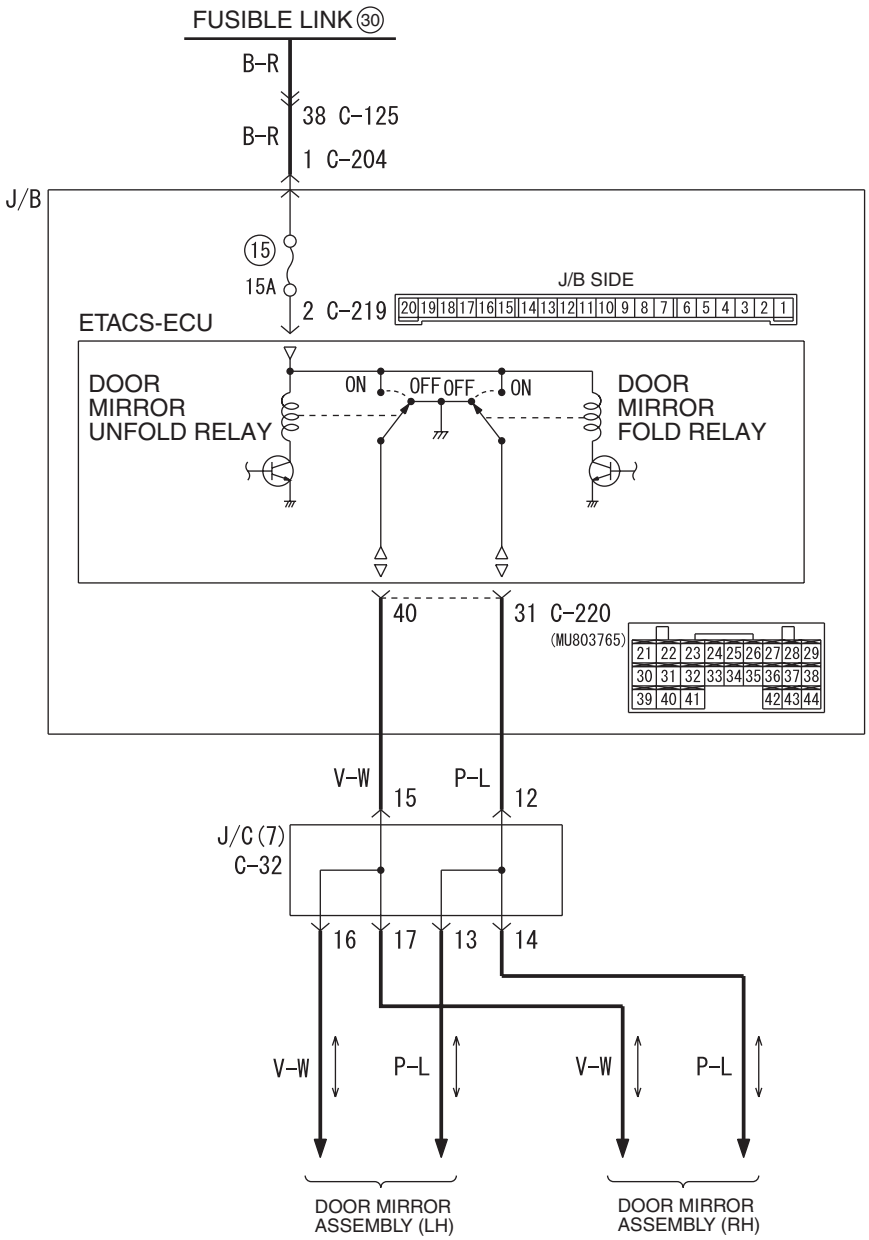

Wire colour code
B : Black LG : Light green G : Green L : Blue W : White Y : Yellow SB : Sky blue
BR : Brown O : Orange GR : Gray R : Red P : Pink V : Violet

W6X54E092A

Main Index
Group TOC

COMMENTS ON TROUBLE SYMPTOM

If the electric retractable remote controlled door mirror does not work at all, these power supply circuit(s), these earth circuit(s), remote controlled mirror switch or ETACS-ECU may be defective.

POSSIBLE CAUSES

- Malfunction of the remote controlled mirror switch
- Malfunction of ETACS-ECU
- Damaged harness wires and connectors

DIAGNOSTIC PROCEDURE

Step 1. ECU check on the SWS monitor.

Check that the power supply and earth lines to the ETACS-ECU and the SWS communication lines are normal.

- Ignition switch: ACC

ECU TO BE CHECKED

- ETACS ECU

OK: "OK" is displayed on the "ETACS ECU" menu.

Q: Is the check result normal?

YES : Go to Step 2.

NO : Refer to Inspection Procedure A-3 "Communication with ETACS-ECU is not possible P.54C-51."

Step 2. SWS monitor data list.

Check the SWS communication signal, which are related to the electric retractable remote controlled mirror.

<Selected item> ETACS ECU

- Ignition switch: ACC

Item No.	Item name	Normal condition
Item 31	IG SW (ACC)	ON

OK: Normal condition is displayed.

Q: Is the check result normal?

YES : Go to Step 3.

NO : Refer to inspection procedure P-1 "The ignition switch (ACC) signal is not received P.54C-332."

Step 3. ETACS switch data by using the SWS monitor

Check the ETACS-ECU signal, which is related to the electric retractable remote controlled mirror.

- Remote controlled mirror switch (folding/unfolding switch): ON

Item No.	Item name	Normal condition
Item 14	Retractable mirror switch	ON

OK: Normal condition is displayed

Q: Is the check result normal?

YES : Go to Step 4.

NO : Refer to inspection procedure P-19 "Signal is not received from the remote controlled mirror switch (folding/unfolding switch) P.54C-410."

Step 4. Connector check: C-219 ETACS-ECU connector.

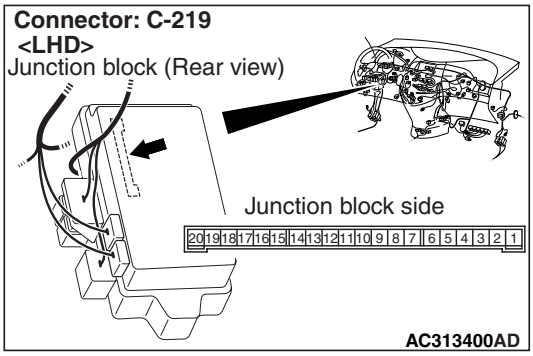

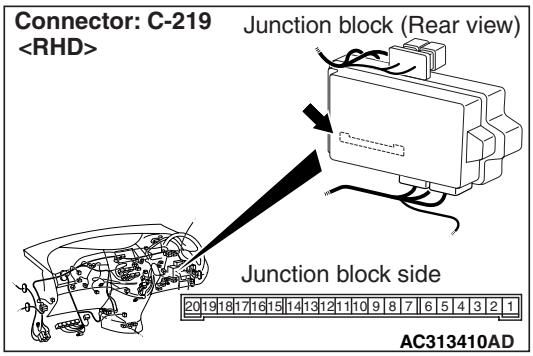

Q: Is the check result normal?

YES : Go to Step 5.

NO : Repair the connector.

Step 5. Voltage measurement at the C-219 ETACS-ECU connector.

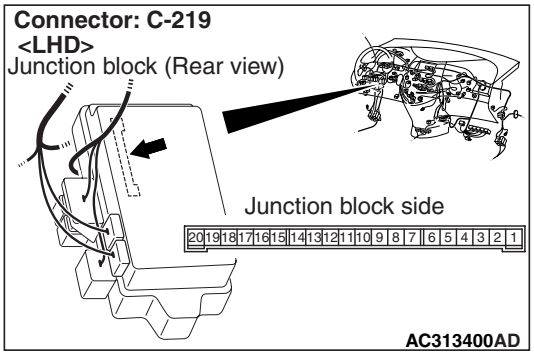

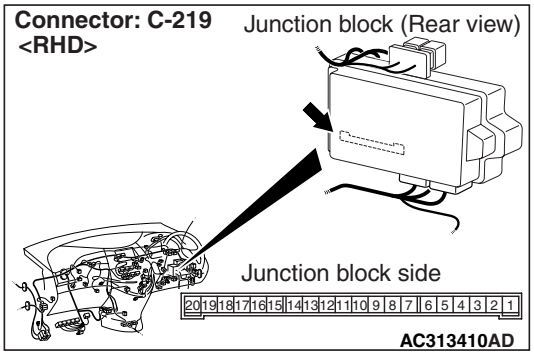

(1) Remove the ETACS-ECU, and measure at the junction block side.

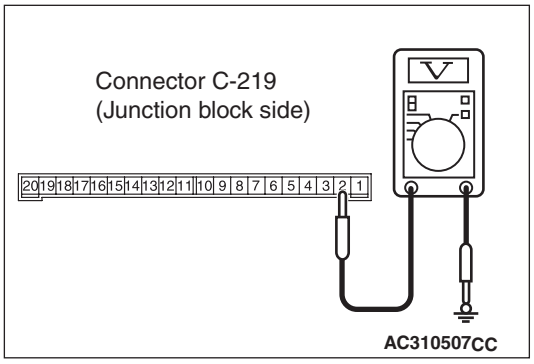

(2) Check the voltage between the C-219 ETACS-ECU connector terminal No.2 and body earth.

OK: System voltage

Q: Is the check result normal?

YES : Go to Step 7.

NO : Go to Step 6.

Step 6. Check the wiring harness between C-219 ETACS-ECU connector terminal No.2 and the fusible link (30).

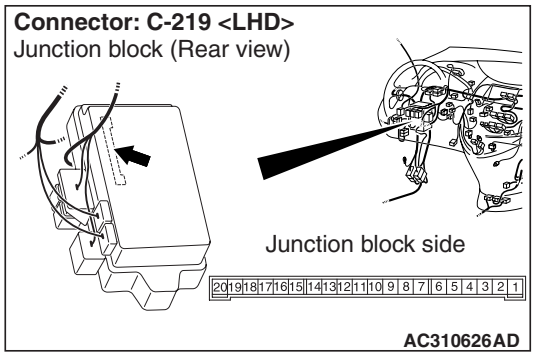

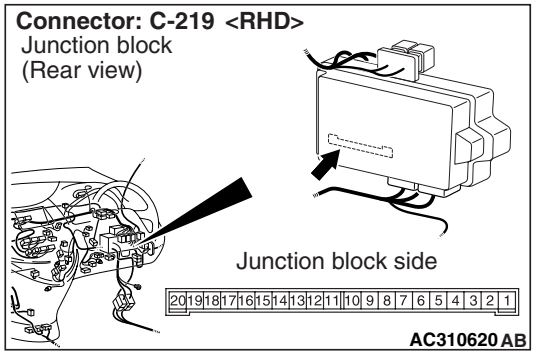

NOTE:

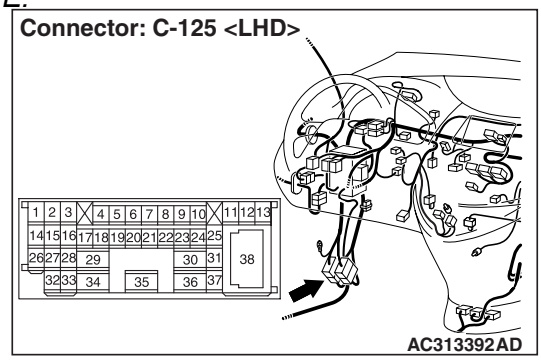

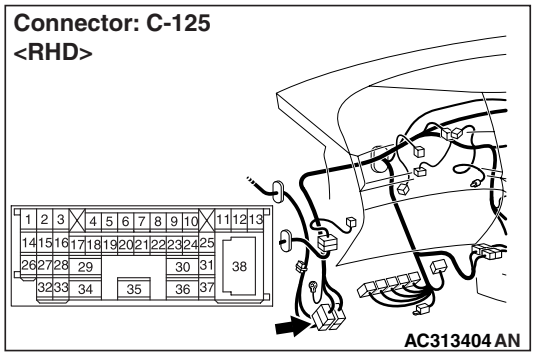

Main Index
Group TOC

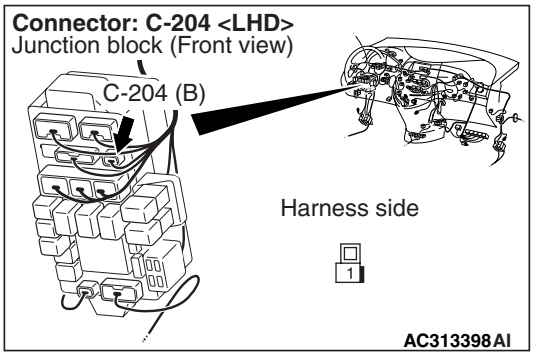

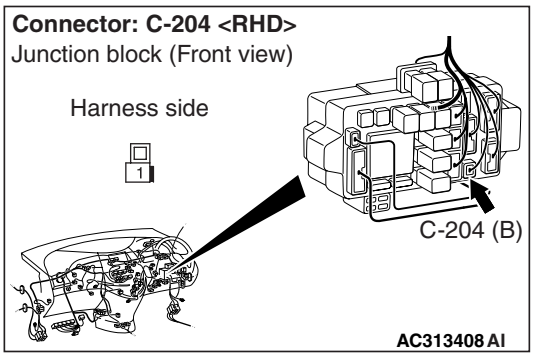

Prior to the wiring harness inspection, check intermediate connectors C-125 and junction block connector C-204, and repair if necessary.

- Check the power supply line to the battery for open circuit.

Q: Is the check result normal?

YES : . The trouble can be an intermittent malfunction (Refer to GROUP 00 – How to Cope with Intermittent Malfunction P.00-5).

NO : . Repair the wiring harness.

Step 7. Retest the system.

Check that the electric retractable remote controlled mirror works normally.

Q: Is the check result normal?

YES : The trouble can be an intermittent malfunction (Refer to GROUP 00 – How to Cope with Intermittent Malfunction P.00-5).

NO : Replace the ETACS-ECU.

Main Index
Group TOC

INSPECTION PROCEDURE I-2: Left or right side electric retractable remote controlled door mirror does not work at all.

⚠ CAUTION

Whenever the ECU is replaced, ensure that the input and output signal circuits are normal.

Electric Retractable Remote Controlled Mirror Circuit

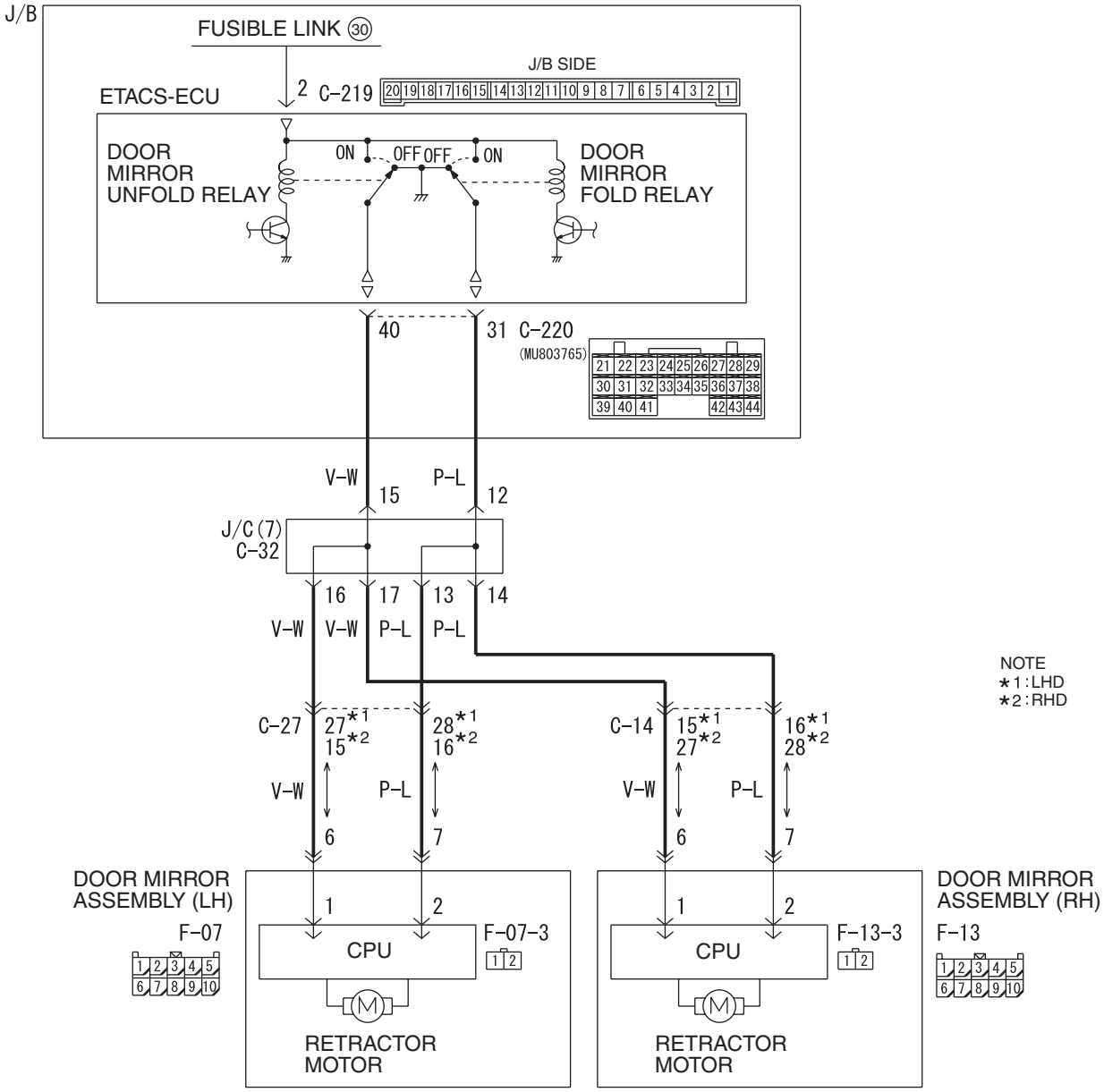

Wire colour code
B : Black LG : Light green G : Green L : Blue W : White Y : Yellow SB : Sky blue
BR : Brown O : Orange GR : Grey R : Red P : Pink V : Violet PU : Purple

W6X54X019A

Main Index
Group TOC

COMMENTS ON TROUBLE SYMPTOM

If left or right side electric retractable remote controlled door mirror does not work at all, electric retractable remote controlled door mirror may be defective.

POSSIBLE CAUSES

- Malfunction of the door mirror assembly
- Malfunction of the retractor motor
- Damaged harness wires and connectors

DIAGNOSTIC PROCEDURE

Step 1. Confirm which door mirror is defective.

Q: Confirm which door mirror is defective.
LH : Go to Step 2.
RH : Go to Step 9.

Step 2. Connectors check: F-07 door mirror assembly (LH) connectors.

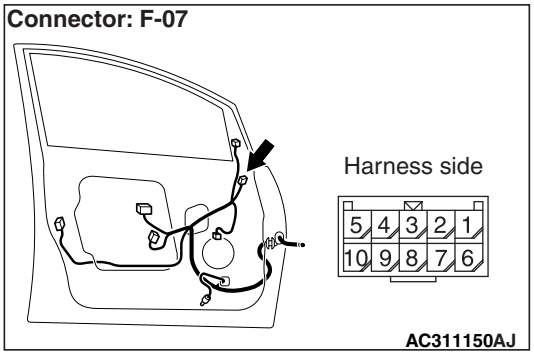

Q: Is the check result normal?
YES : Go to Step 3.
NO : Repair the connector.

Step 3. Check the door mirror assembly (LH).

Check that the electric folding outside rear-view mirror (LH) works normally. Refer to GROUP 51 – Door mirror P.51-38.

Q: Is the check result normal?
YES : Go to Step 7.
NO : Go to Step 4.

Step 4. Connectors check: F-07-3 retractors motor (LH) connectors.

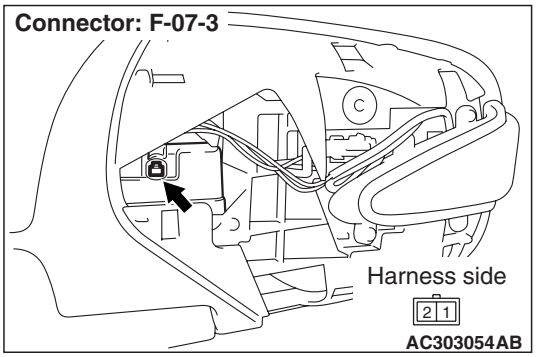

Q: Is the check result normal?
YES : Go to Step 5.
NO : Repair the connector.

Step 5. Check the retractor motor (LH).

Check that the electric folding outside rear-view mirror (LH) works normally. Refer to GROUP 51 – Door mirror P.51-38.

Q: Is the check result normal?
YES : Go to Step 6.
NO : Replace the retractors motor (LH).

Step 6. Check the wiring harness between F-07-3 retractor motor (LH) connector terminal Nos. 1, 2 and F-07 door mirror assembly (LH) connector terminal Nos. 7, 6.

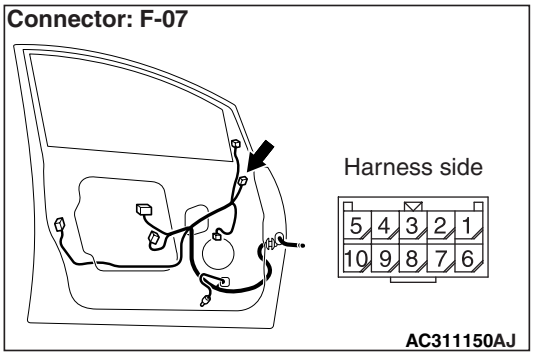

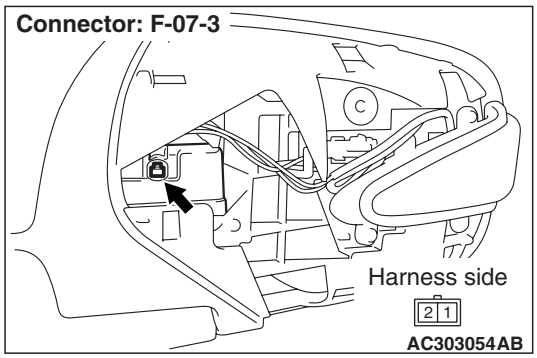

- Check the input and output signal line for open circuit.

Q: Is the check result normal?
YES : Replace the door mirror assembly (LH).
NO : Repair the wiring harness.

Step 7. Connector check: C-220 ETACS-ECU connector.

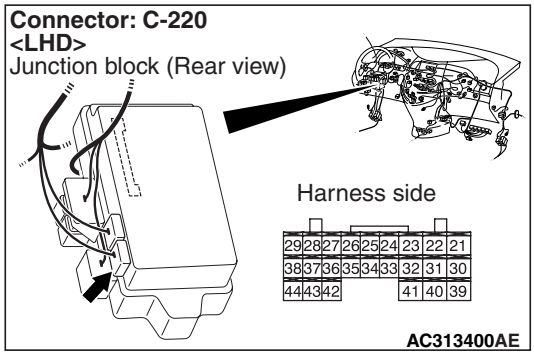

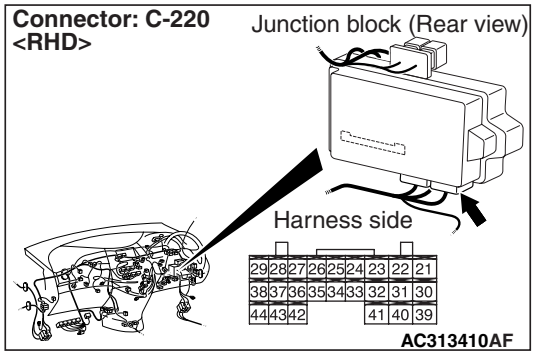

Q: Is the check result normal?
YES : Go to Step 8.
NO : Repair the connector.

Main Index
Group TOC

Step 8. Check the wiring harness between C-220 ETACS-ECU connector terminal Nos. 31, 40 and F-07 door mirror assembly (LH) connector terminal Nos. 7, 6.

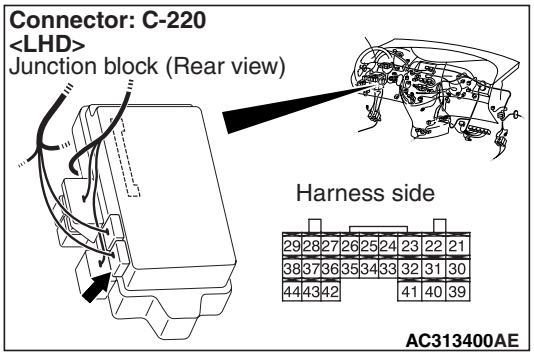

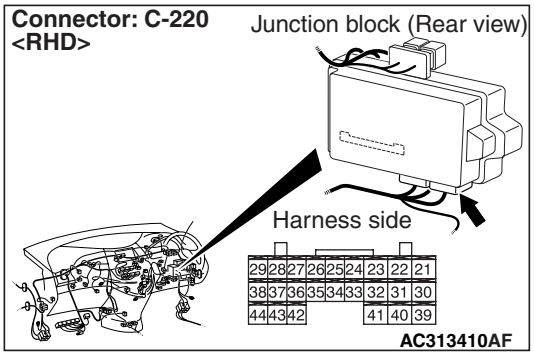

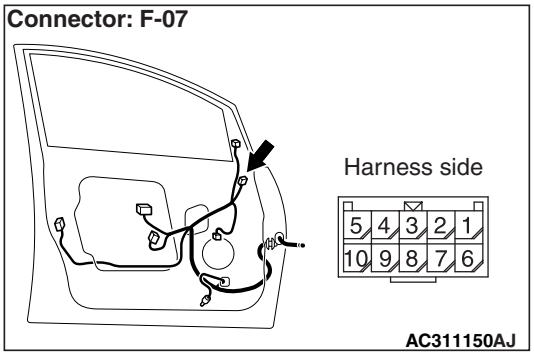

NOTE:

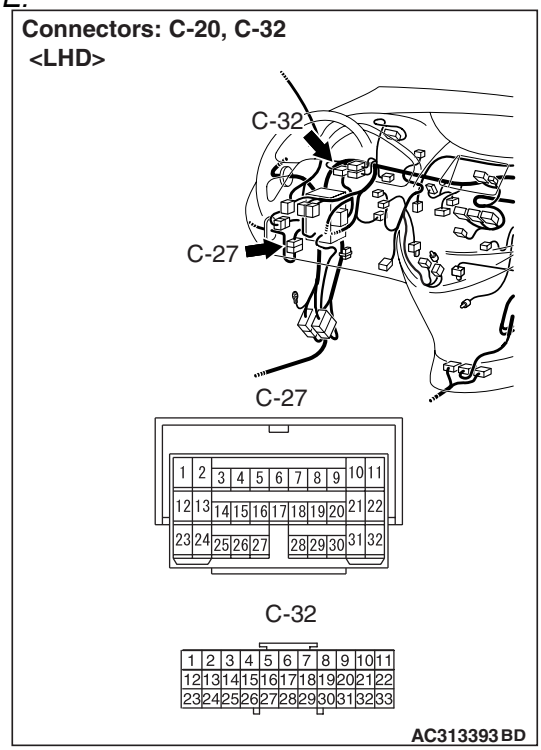

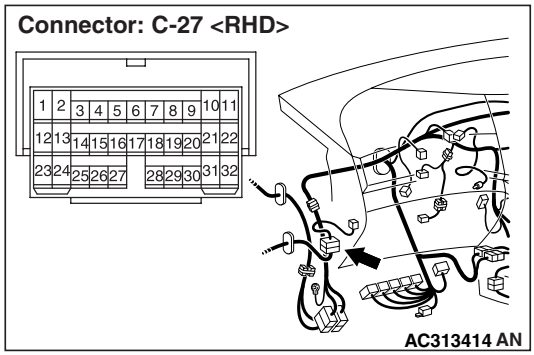

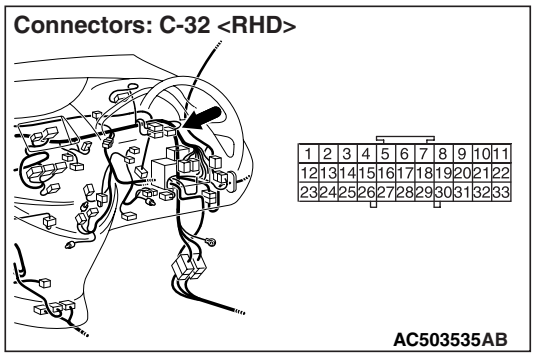

Prior to the wiring harness inspection, check intermediate connector C-27 and junction block connector C-32, and repair if necessary.

- Check the input and output signal line for open circuit.

Q: Is the check result normal?

YES : Go to Step 16.

NO : Repair the wiring harness.

Main Index
Group TOC

Step 9. Connectors check: F-13 door mirror assembly (RH) connectors.

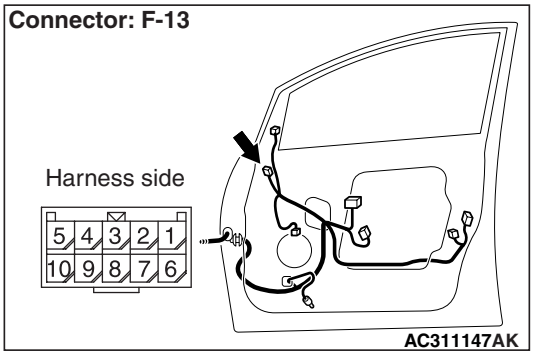

Q: Is the check result normal?
YES : Go to Step 10.
NO : Repair the connector.

Step 10. Check the door mirror assembly (RH).
Check that the electric folding outside rear-view mirror (RH) works normally. Refer to GROUP 51 – Door mirror P.51-38.

Q: Is the check result normal?
YES : Go to Step 14.
NO : Go to Step 11.

Step 11. Connectors check: F-13-3 retractors motor (RH) connectors.

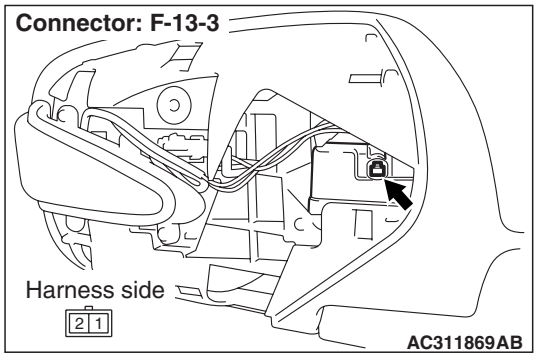

Q: Is the check result normal?
YES : Go to Step 12.
NO : Repair the connector.

Step 12. Check the retractor motor (RH).
Check that the electric folding outside rear-view mirror (RH) works normally. Refer to GROUP 51 – Door mirror P.51-38.

Q: Is the check result normal?
YES : Go to Step 13.
NO : Replace the retractors motor (RH).

Step 13. Check the wiring harness between F-13-3 retractor motor (RH) connector terminal Nos. 1, 2 and F-13 door mirror assembly (RH) connector terminal Nos. 7, 6.

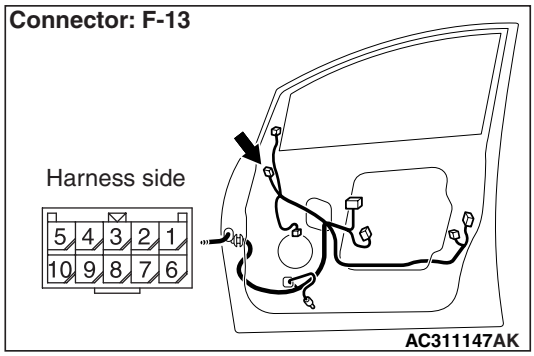

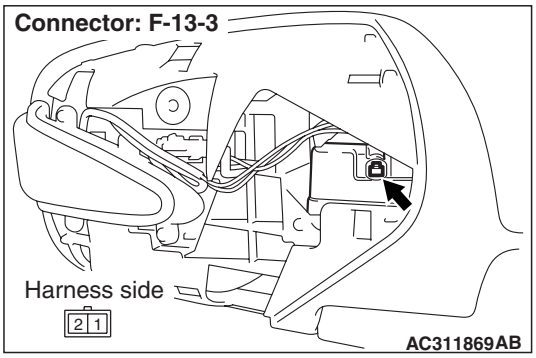

- Check the input and output signal line for open circuit.

Q: Is the check result normal?
YES : Replace the door mirror assembly (RH).
NO : Repair the wiring harness.

Main Index
Group TOC

Step 14. Connector check: C-220 ETACS-ECU connector.

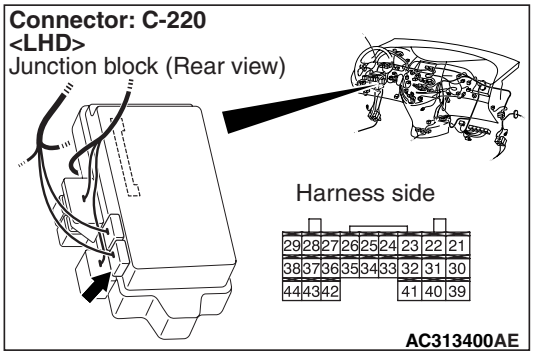

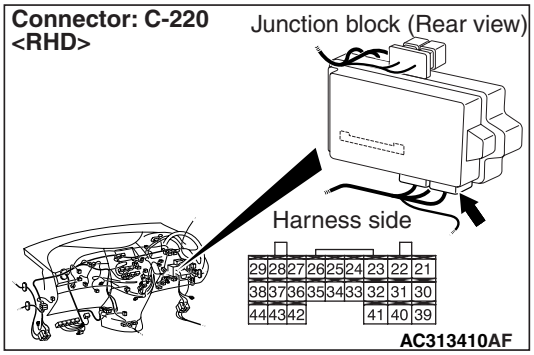

Q: Is the check result normal?

YES : Go to Step 15.

NO : Repair the connector.

Step 15. Check the wiring harness between C-220 ETACS-ECU connector terminal Nos. 31, 40 and F-13 door mirror assembly (RH) connector terminal Nos. 7, 6.

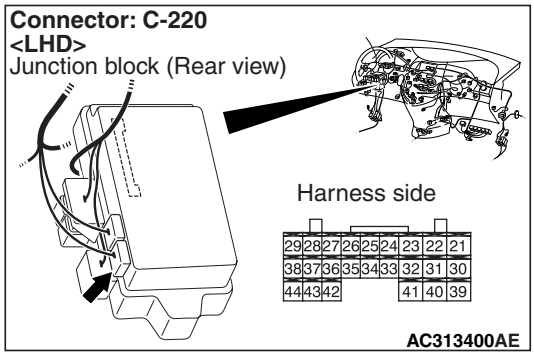

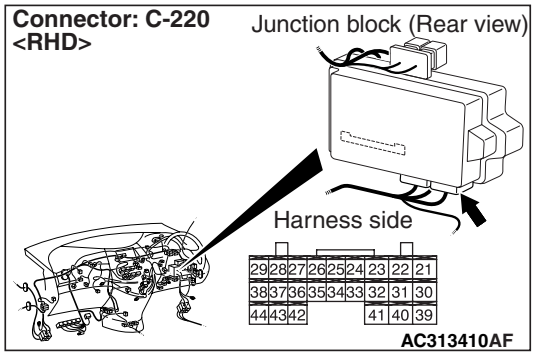

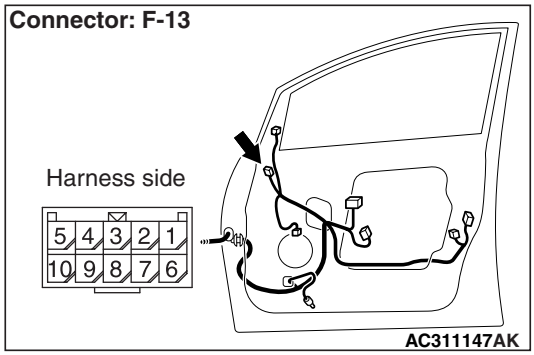

NOTE:

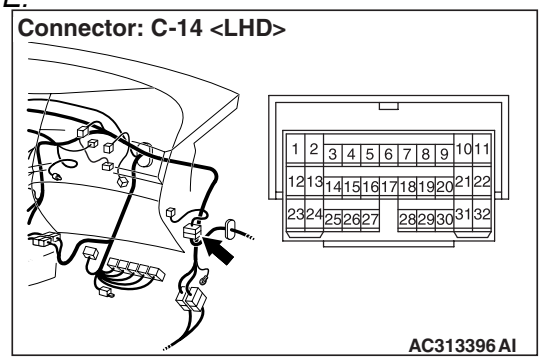

Main Index
Group TOC

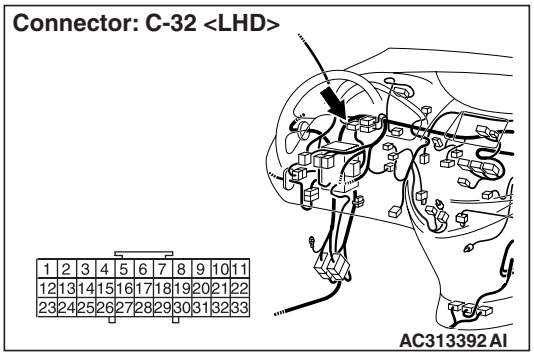

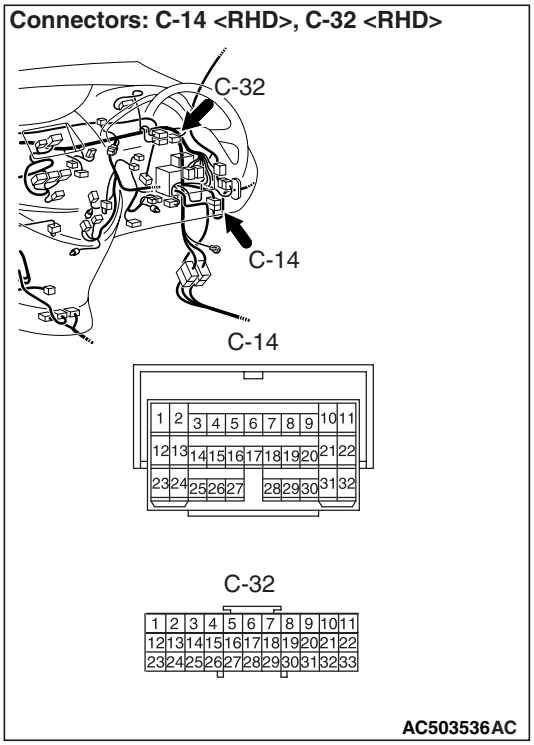

Prior to the wiring harness inspection, check intermediate connector C-14 and junction block connector C-32, and repair if necessary.

- Check the input and output signal line for open circuit.

Q: Is the check result normal?

YES : . Go to Step 16.

NO : . Repair the wiring harness.

Step16. Retest the system.

Check that the electric retractable remote controlled mirror works normally.

Q: Is the check result normal?

YES : The trouble can be an intermittent malfunction (Refer to GROUP 00 – How to Cope with Intermittent Malfunction P.00-5).

NO : Replace the ETACS-ECU.

Main Index
Group TOC

INSPECTION PROCEDURE I-3: Electric retractable remote controlled door mirror timer function does not at all.

⚠ CAUTION
Whenever the ECU is replaced, ensure that the input and output signal circuits are normal.

COMMENTS ON TROUBLE SYMPTOM

If the door mirror can be folded and unfolded with the remote controlled mirror switch (fold/unfold switch), the ETACS-ECU may be defective.

POSSIBLE CAUSES

- Malfunction of the ETACS-ECU
- Damaged harness wires and connectors

DIAGNOSTIC PROCEDURE

Step 1. Check the electric retractable door mirrors operation.
Check that the door mirror is folded and unfolded with the remote controlled mirror switch when the ignition switch is at ACC position.

Q: Is the check result normal?
YES : Go to Step 2.
NO : Refer to inspection procedure I-1 "Electric retractable remote controlled door mirror does not work at all P.54C-195."

Step 2. ECU check on the SWS monitor.
Check that the power supply and earth lines to the ETACS-ECU and the SWS communication lines are normal.
- Ignition switch: OFF

ECU TO BE CHECKED
- ETACS ECU

OK: "OK" is displayed on the "ETACS ECU" menu.

Q: Is the check result normal?
YES : Go to Step 3.
NO : Refer to Inspection Procedure A-3 "Communication with ETACS-ECU is not possible P.54C-51."

Step 3. SWS monitor data list.
Check the SWS communication signal, which are related to the electric retractable door mirror timer function.

<Selected item> ETACS ECU
- Ignition switch: IG1

Item No.	Item name	Normal condition
Item 30	IG SW (IG1)	ON

OK: Normal condition is displayed.

Q: Is the check result normal?
YES : Go to Step 4.
NO : Refer to inspection procedure P-2 "The ignition switch (IG1) signal is not received P.54C-335."

Step 4. Retest the system.
Check that the electric retractable door mirror timer function works normally.

Q: Is the check result normal?
YES : The trouble can be an intermittent malfunction (Refer to GROUP 00 – How to Cope with Intermittent Malfunction P.00-5).
NO : Replace the ETACS-ECU.

Main Index
Group TOC

INSPECTION PROCEDURE I-4: Vehicle speed-dependent unfolding function does not work normally.

⚠ CAUTION
Whenever the ECU is replaced, ensure that the input and output signal circuits are normal.

Vehicle Speed-Dependent Unfolding Function

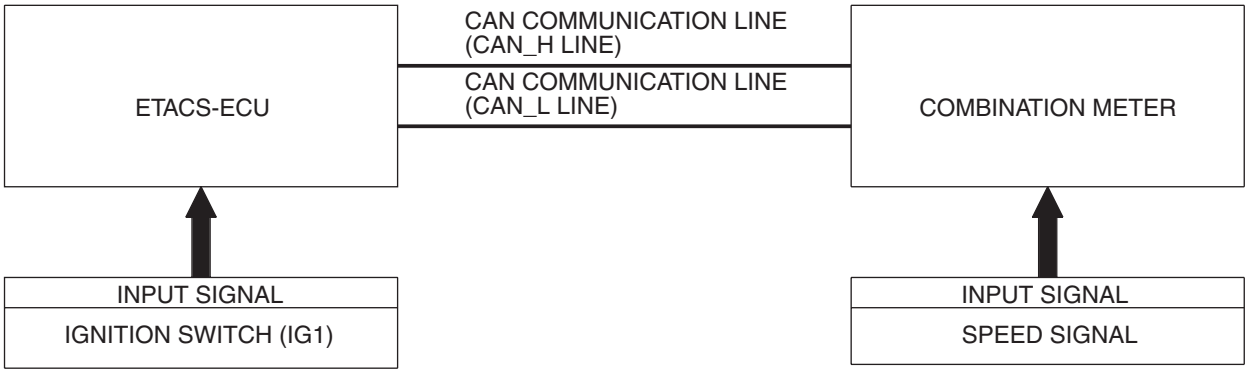

W4X54E103A

COMMENTS ON TROUBLE SYMPTOM

The ETACS-ECU operates this function in accordance with the input signals below.

- Ignition switch (IG1)
- Vehicle speed signal

If this function does not work normally, these input signal circuit(s) or the ETACS-ECU may be defective. In addition, it is possible that the function except the vehicle speed-dependent unfolding function has been set by using the customized function.

POSSIBLE CAUSES

- Malfunction of ETACS-ECU
- Damaged harness wires and connectors

DIAGNOSTIC PROCEDURE

Step 1. M.U.T.-III CAN bus diagnostics
Use the M.U.T.-III to diagnose the CAN bus lines.

Q: Is the check result normal?
YES : Go to Step 2.
NO : Repair the CAN bus line (Refer to GROUP 54F, Diagnosis P.54F-13).

Step 2. Check the SWS monitor customized function.
Check that "WING MIRROR" is set to "SPEED SEN FUN" by using the customized function.

Q: Is the check result normal?
YES : Go to Step 3.
NO : Set "WING MIRROR" to "SPEED SEN FUN" by using the customized function.(Refer to P.54C-432).

Step 3. Check the electric folding door mirrors operation.
Check that the door mirror is folded and unfolded with the remote controlled mirror switch when the ignition switch is at ACC position.

Q: Is the check result normal?
YES : Go to Step 4.
NO : Refer to inspection procedure I-1 "Electric retractable remote controlled door mirror does not work at all P.54C-195."

Main Index
Group TOC

Step 4. ECU check by using the SWS monitor.
Check that the power supply and earth lines to the ETACS-ECU and the SWS communication lines are normal.

- Ignition switch: ON

ECUS TO BE CHECKED

- ETACS ECU

OK: "OK" is displayed on the "ETACS ECU" menu.

Q: Is the check result normal?
YES : Go to Step 5.
NO : Refer to Inspection Procedure A-3 "Communication with ETACS-ECU is not possible P.54C-51."

Step 5. ETACS ANALOG data by using the SWS monitor.
Check the ETACS-ECU signal related to the vehicle speed-dependent unfolding function.

- Set the simulated vehicle speed at approximately 10km/h.

Item No.	Item name	Normal condition
Item 03	Vehicle speed	8 – 10km/h

OK: Normal condition is displayed.

Q: Is the check result normal?
YES : Go to Step 6.
NO : Refer to inspection procedure P-23 "The vehicle speed signal is not received P.54C-425."

Step 6. Retest the system.
Check that the vehicle speed-dependent unfolding function works normally.

Q: Is the check result normal?
YES : The trouble can be an intermittent malfunction (Refer to GROUP 00 – How to Cope with Intermittent Malfunction P.00-5).
NO : Replace the ETACS-ECU.

Main Index
Group TOC

IGNITION KEY CYLINDER ILLUMINATION LAMP

INSPECTION PROCEDURE J-1: The ignition key cylinder illumination lamp does not illuminate/extinguish normally.

⚠ CAUTION
Whenever the ECU is replaced, ensure that the input and output signal circuits are normal.

Ignition Key Cylinder Illumination Lamp Circuit

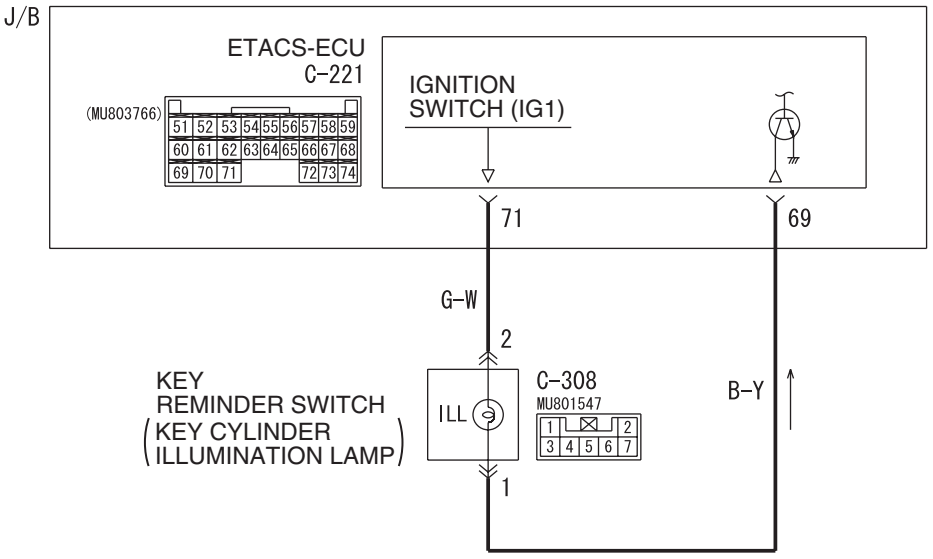

Wire colour code
B : Black LG : Light green G : Green L : Blue W : White Y : Yellow SB : Sky blue
BR : Brown O : Orange GR : Gray R : Red P : Pink V : Violet

W4X54E168A

COMMENTS ON TROUBLE SYMPTOM

The ETACS-ECU operates this function in accordance with the input signals below.

<Vehicles without keyless entry system>
- Ignition switch (IG1)
- Driver's door switch

<Vehicles with keyless entry system>
- Ignition switch (IG1)
- Key reminder switch
- Driver's door switch
- Interior lamp loaded signal

If this function does not work normally, these input signal circuit(s), the ignition key cylinder illumination lamp or the ETACS-ECU may be defective.

POSSIBLE CAUSES

- Malfunction of the key reminder switch
- Malfunction of the driver's door switch
- Malfunction of the ignition key cylinder illumination lamp
- Malfunction of the ETACS-ECU
- Damaged harness wires and connectors

Main Index
Group TOC

DIAGNOSIS PROCEDURE

Step 1. Check the operation of the interior lamp.
Check that the interior lamps illuminate and extinguish normally.

Q: Is the check result normal?
YES : Go to Step 2.
NO : Refer to inspection procedure O-1 "The interior lamps (room ramp, rear parsonal lamps, door lamps, luggage compartment lamp, key illumination lamp) does not illuminate or extinguish normally P.54C-271."

Step 2. ECU check by using the SWS monitor.
Check that the power supply and earth lines to the ETACS-ECU and the SWS communication lines are normal.
- Ignition switch: OFF

ECU TO BE CHECKED
- ETACS ECU

OK: "OK" is displayed on the "ETACS ECU" menu.

Q: Is the check result normal?
YES : Go to Step 3.
NO : Refer to Inspection Procedure A-3 "Communication with ETACS-ECU is not possible P.54C-51."

Step 3. SWS monitor data list
Check the SWS communication signal, which are related to the ignition key cylinder illumination lamp.

<Selected item> ETACS ECU
- Ignition switch: OFF
- Driver's door: open

Item No.	Item name	Normal condition
Item 30	IG SW(IG1)	OFF
Item 32	DR DOOR SW	ON

OK: Normal conditions are displayed for all the items

Q: Are the check result normal?
Normal conditions are displayed for all the items. <Vehicles without keyless entry system> : Go to Step 4.
Normal conditions are displayed for all the items. <Vehicles with keyless entry system> : Go to Step 5.
Normal condition is not displayed for item No.30. : Refer to inspection procedure P-2 "The ignition switch (IG1) signal is not received P.54C-335."
Normal condition is not displayed for item No.32. : Refer to inspection procedure P-5 "The driver's door switch signal is not received P.54C-346 <LH drive vehicles> or P.54C-348 <RH drive vehicles>."

Step 4. ETACS switch data by using the SWS monitor
Check the ETACS-ECU communication signal, which is related to the ignition key cylinder illumination lamp.
- Ignition switch: OFF (key inserted)

Item No.	Item name	Normal condition
Item 03	Key reminder switch	OFF

OK: Normal condition is displayed.

Q: Is the check result normal?
YES : Go to Step 5.
NO : Refer to inspection procedure P-10 "The key reminder switch signal is not received P.54C-364."

Main Index
Group TOC

Step 5. Connector check: C-308 key reminder switch connector.

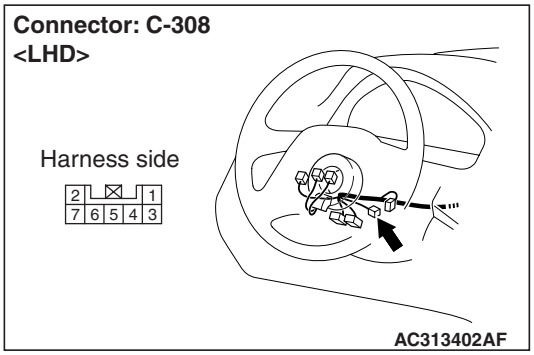

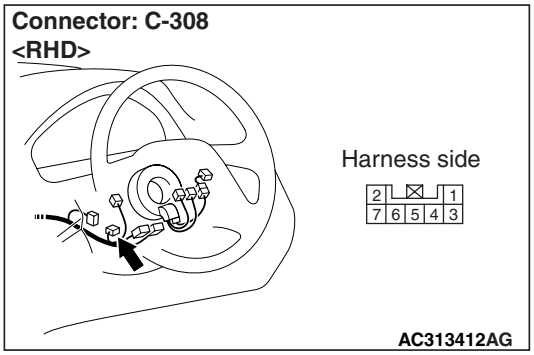

Q: Is the check result normal?
YES : Go to Step 6.
NO : Repair the defective connector.

Step 6. Check the bulb of the ignition key cylinder illumination lamp.

Check the bulb of the ignition key cylinder illumination lamp.

Q: Is the check result normal?
YES : Go to Step 7.
NO : Replace the bulb of the ignition key cylinder illumination lamp.

Step 7. Connector check: C-221 ETACS-ECU connector.

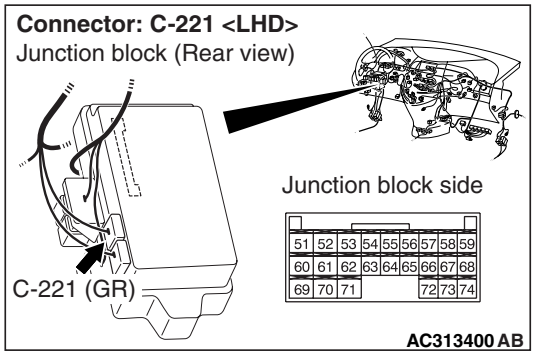

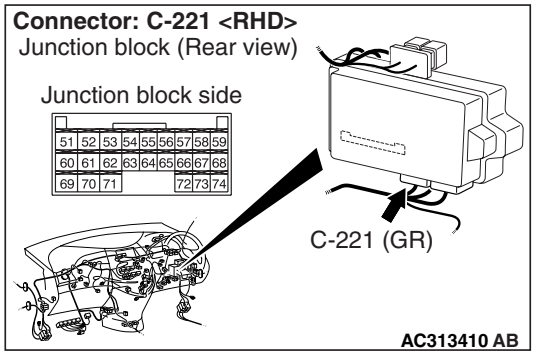

Q: Is the check result normal?
YES : Go to Step 8.
NO : Repair the defective connector.

Main Index
Group TOC

Step 8. Check the wiring harness from C-221 ETACS-ECU connector terminal Nos. 69 and 71 to C-308 key cylinder illumination lamp connector terminal Nos. 1 and 2.

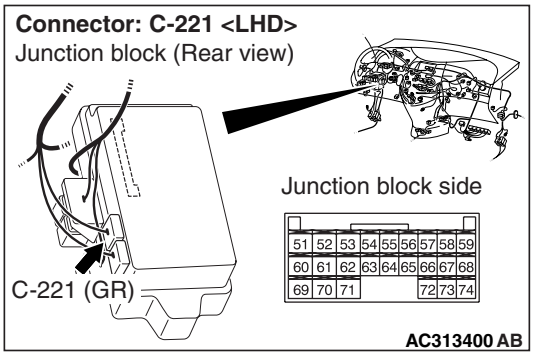

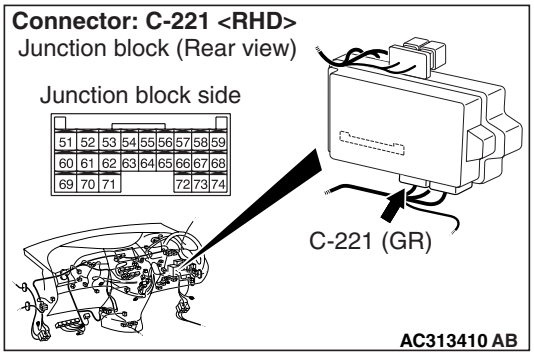

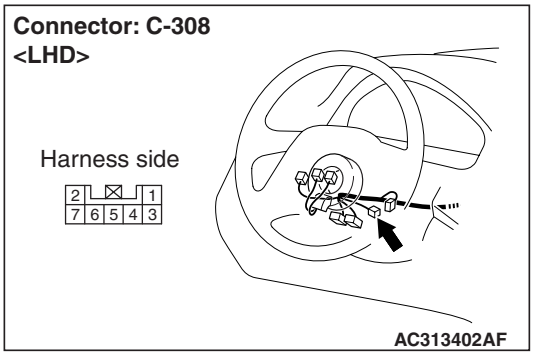

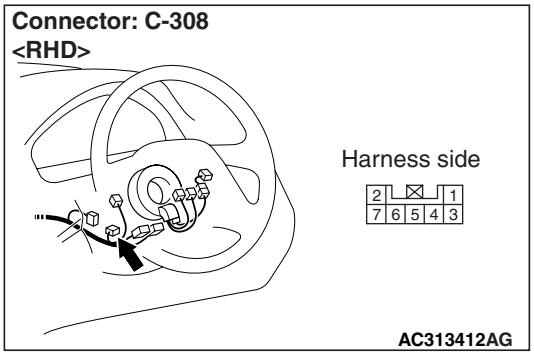

- Check the input and output lines for open circuit.

Q: Is the check result normal?

YES : . Go to Step 9.

NO : . Repair the wiring harness.

Step 9. Retest the system.

Check that the ignition key cylinder illumination lamp illuminates/extinguishes normally.

Q: Is the check result normal?

YES : The trouble can be an intermittent malfunction (Refer to GROUP 00 – How to Cope with Intermittent Malfunction P.00-5).

NO : Replace the ETACS-ECU.

Main Index
Group TOC

SEAT BELT WARNING LAMP

INSPECTION PROCEDURE K-1: The seat belt warning lamp does not flash normally. <Vehicles for GCC>

⚠ CAUTION
Whenever the ECU is replaced, ensure that the input and output signal circuits are normal.

Seat Belt Warning Lamp Function

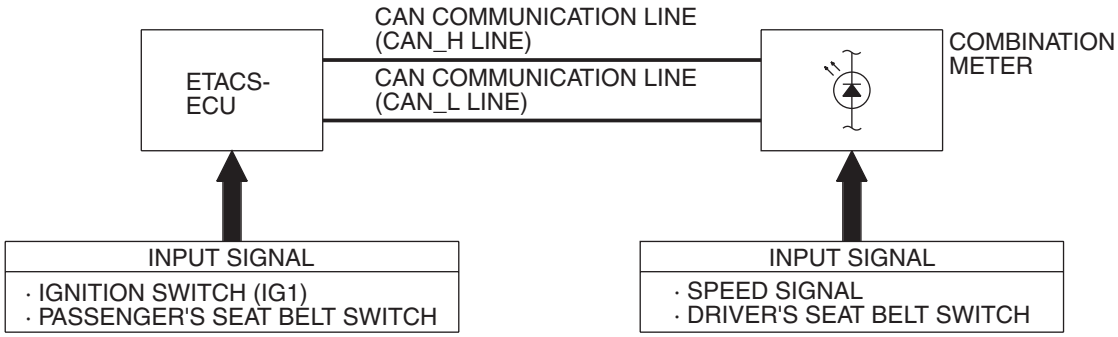

W4X54E167A

COMMENTS ON TROUBLE SYMPTOM

The ETACS-ECU flashes the seat belt warning lamp in accordance with the input signal from the ignition switch (IG1).
If it does not flash normally, these input signal circuit(s) or the ETACS-ECU may be defective.

POSSIBLE CAUSES

- Malfunction of the ETACS-ECU
- Damaged harness wires and connectors

DIAGNOSTIC PROCEDURE

Step 1. M.U.T.-III CAN bus diagnostics

Use the M.U.T.-III to diagnose the CAN bus lines.

Q: Is the check result normal?
YES : Go to Step 2.
NO : Repair the CAN bus line (Refer to GROUP 54F, Diagnosis P.54F-13).

Step 2. ECU check by using the SWS monitor

Check that the power supply and earth lines to the ETACS-ECU and the SWS communication lines are normal.

- Turn the ignition switch to the ON position.

ECU TO BE CHECKED

- ETACS ECU

  OK: "OK" is displayed on the "ETACS ECU" menu.

Q: Is the check result normal?
YES : Go to Step 3.
NO : Refer to Inspection Procedure A-3 "Communication with ETACS-ECU is not possible P.54C-51."

Main Index
Group TOC

Step 3. SWS monitor data list.
Check the SWS communication signal, which are related to the seat belt warning lamp.

<Selected item> ETACS ECU
- Ignition switch: ON

Item No.	Item name	Normal condition
Item 30	IG SW(IG1)	ON

OK: Normal condition is displayed.

Q: Is the check result normal?
YES : Go to Step 4.
NO : Refer to Inspection Procedure P-2 "The ignition switch (IG1) signal is not received P.54C-335."

Step 4. ETACS switch data by using the SWS monitor
Check the ETACS-ECU input signal related to the seat belt warning lamp function.
- Ignition switch: ON
- Driver's seat belt switch: ON (Unfastened)

Item No.	Item name	Normal condition
Item 12	Driver’s seat belt switch	ON

OK: Normal condition is displayed.

Q: Are the check result normal?
YES : Go to Step 5.
NO : Refer to inspection procedure P-17 "The driver's seat belt switch signal is not received .<LH drive vehicles>P.54C-401 ."

Step 5. ETACS ANALOG data by using the SWS monitor.
Check the ETACS-ECU input signal related to the seat belt warning lamp function.
- Set the simulated vehicle speed at approximately 10km/h.

Item No.	Item name	Normal condition
Item 03	Vehicle speed	8 – 10km/h

OK: Normal condition is displayed.

Q: Is the check result normal?
YES : Go to Step 6.
NO : Refer to inspection procedure P-23 "The vehicle speed signal is not received P.54C-425."

Step 6. Retest the system.
Check that the seat belt warning lamp flashes normally.

Q: Is the check result normal?
YES : The trouble can be an intermittent malfunction (Refer to GROUP 00 – How to Cope with Intermittent Malfunction P.00-5).
NO : Replace the ETACS-ECU.

Main Index
Group TOC

INSPECTION PROCEDURE K-1: The seat belt warning lamp does not flash normally. <Vehicles for Australia and New Zealand>

⚠ CAUTION
Whenever the ECU is replaced, ensure that the input and output signal circuits are normal.

Seat Belt Warning Lamp Function

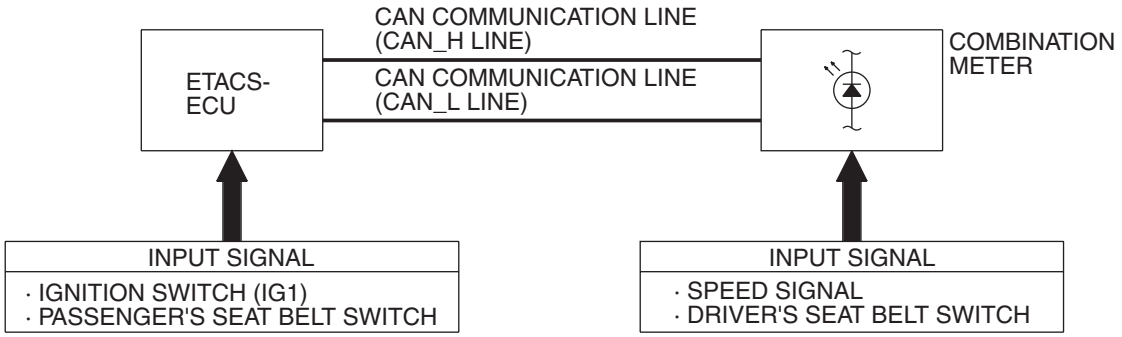

W4X54E167A

COMMENTS ON TROUBLE SYMPTOM

The ETACS-ECU flashes the seat belt warning lamp in accordance with the input signal from the ignition switch (IG1).
If it does not flash normally, these input signal circuit(s) or the ETACS-ECU may be defective.

POSSIBLE CAUSES

- Malfunction of the ETACS-ECU
- Damaged harness wires and connectors

DIAGNOSTIC PROCEDURE

Step 1. M.U.T.-III CAN bus diagnostics
Use the M.U.T.-III to diagnose the CAN bus lines.

Q: Is the check result normal?
YES : Go to Step 2.
NO : Repair the CAN bus line (Refer to GROUP 54F, Diagnosis P.54F-13).

Step 2. ECU check by using the SWS monitor
Check that the power supply and earth lines to the ETACS-ECU and the SWS communication lines are normal.

- Turn the ignition switch to the ON position.

ECU TO BE CHECKED

- ETACS ECU

  OK: "OK" is displayed on the "ETACS ECU" menu.

Q: Is the check result normal?
YES : Go to Step 3.
NO : Refer to Inspection Procedure A-3 "Communication with ETACS-ECU is not possible P.54C-51."

Main Index
Group TOC

Step 3. SWS monitor data list.
Check the SWS communication signal, which are related to the seat belt warning buzzer function.

<Selected item> ETACS ECU
- Ignition switch: ON

Item No.	Item name	Normal condition
Item 30	IG SW(IG1)	ON

OK: Normal condition is displayed.

Q: Is the check result normal?
YES : Go to Step 4.
NO : Refer to Inspection Procedure P-2 "The ignition switch (IG1) signal is not received P.54C-335."

Step 4. Check the seat belt switch, where the seat belt warning lamp does not function normally.

Q: When the seatbelt switch is operated, which seatbelt warning lamp operates normally?
Driver's seat belt : Go to Step 6.
Passenger's seat belt : Go to Step 5.

Step 5. ETACS switch data by using the SWS monitor
Check the ETACS-ECU signal related to the seat belt warning buzzer function.
- Driver's seat belt switch: ON (Unfastened)

Item No.	Item name	Normal condition
Item 12	Driver’s seat belt switch	ON

OK: Normal condition is displayed.

Q: Are the check result normal?
YES : Go to Step 7.
NO : Refer to inspection procedure P-17 "The driver's seat belt switch signal is not received <RH drive vehicles>P.54C-404 ."

Step 6. ETACS switch data by using the SWS monitor
Check the ETACS-ECU signal related to the seat belt warning buzzer function.
- Passenger’s seat belt switch: ON (Unfastened)
- Seat occupancy sensor: ON (Seat occupied)

Item No.	Item name	Normal condition
Item 43	Passenger’s seat belt switch	ON

OK: Normal condition is displayed.

Q: Are the check result normal?
YES : Go to Step 7.
NO : Refer to inspection procedure P-18 "The front passenger's seat belt switch signal is not received P.54C-407.

Step 7. ETACS ANALOG data by using the SWS monitor.
Check the ETACS-ECU signal related to the seat belt warning buzzer function.
- Set the simulated vehicle speed at approximately 10km/h.

Item No.	Item name	Normal condition
Item 03	Vehicle speed	8 – 10km/h

OK: Normal condition is displayed.

Q: Is the check result normal?
YES : Go to Step 8.
NO : Refer to inspection procedure P-23 "The vehicle speed signal is not received P.54C-425."

Step 8. Retest the system.
Check that the seat belt warning lamp work normally.

Q: Is the check result normal?
YES : The trouble can be an intermittent malfunction (Refer to GROUP 00 – How to Cope with Intermittent Malfunction P.00-5).
NO : Replace the ETACS-ECU.

Main Index
Group TOC

HEADLAMP AND TAIL LAMP

INSPECTION PROCEDURE L-1: The tail/stop lamps do not illuminate normally.

⚠ CAUTION
Whenever the ECU is replaced, ensure that the input and output signal circuits are normal.

Tail Lamp Relay Circuit

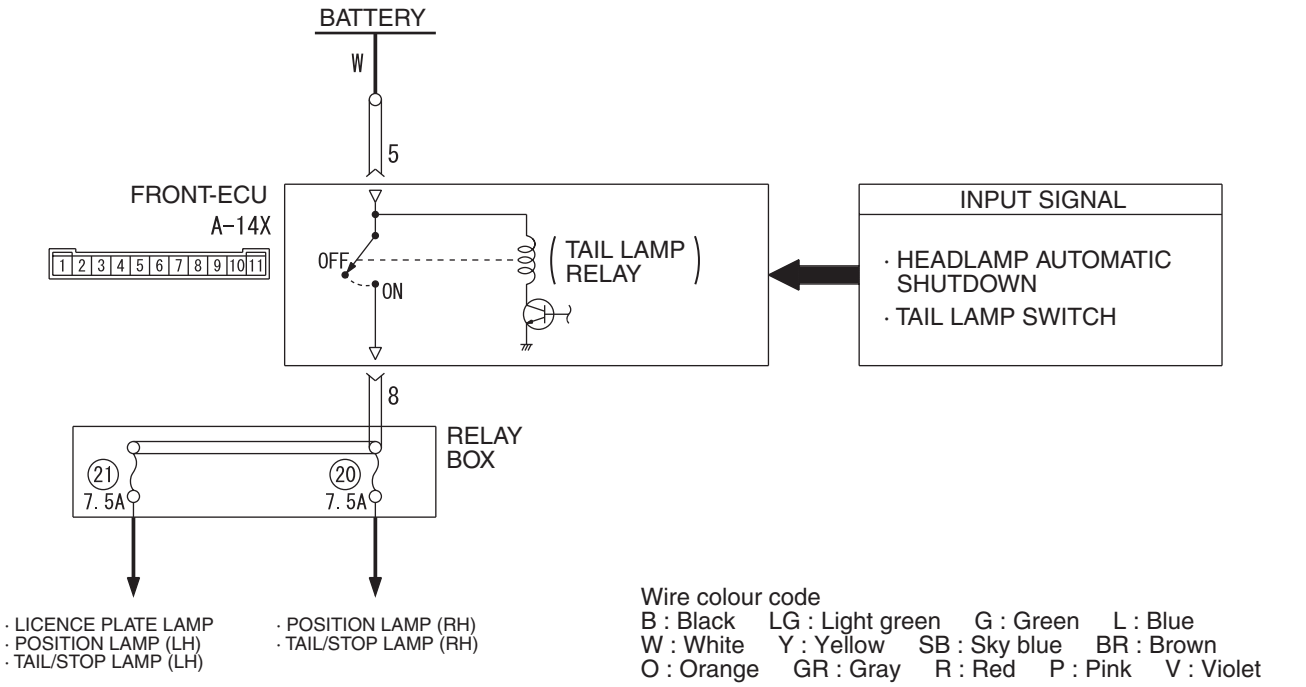

W4X54E26AA

COMMENTS ON TROUBLE SYMPTOM

If all the tail/stop lamps do not illuminate, the tail lamp switch input circuit or the front-ECU may be defective.

POSSIBLE CAUSES

- Malfunction of the column switch
- Malfunction of the front-ECU
- Damaged harness wires and connectors

Main Index
Group TOC

DIAGNOSIS PROCEDURE

Step 1. ECU check by using the SWS monitor.
Check that the power supply and earth lines to the column switch (column-ECU) and the front-ECU and the SWS communication lines are normal.
- Ignition switch: OFF

ECUS TO BE CHECKED
- COLUMN ECU
- FRONT ECU

OK: "OK" are displayed for all the items

Q: Are the check result normal?
"OK" are displayed for all the items : Go to Step 2.
"NG" is displayed on the "COLUMN ECU" menu. : Refer to Inspection Procedure A-2 "Communication with column switch (column-ECU) is not possible P.54C-45."
"NG" is displayed on the "FRONT ECU" menu. : Refer to Inspection Procedure A-4 "Communication with front-ECU is not possible P.54C-58."

Step 2. Function diagnosis by using the SWS monitor.
Check the SWS communication signal, which are related to the tail lamps.

<Selected item> LIGHTING - TAIL LAMP
- Ignition switch: ON
- Lighting switch: TAIL

Item No.	Item name	Normal condition
Item 00	HEADLAMP SW	ON when the lighting switch is at HEAD
Item 01	TAIL LAMP SW	ON when the lighting switch is at TAIL
Item 03	PASSING SW	OFF
Item 30	IG SW(IG1)	ON
Item 35	HD AUTO-CUT	OFF
Item 70	FRONT ECU ACK	NORMAL ACK

OK: Normal conditions are displayed for all the items

Q: Are the check result normal?
Normal conditions are displayed for all the items. : Go to Step 3.
Normal condition is not displayed for item 00, 01 or 03. : Refer to inspection procedure P-6 "The column switch (lighting and turn-signal lamp switch) signal is not received P.54C-350."
Normal condition is not displayed for item No.30. : Refer to inspection procedure P-2 "The ignition switch (IG1) signal is not received P.54C-335."
Normal condition is not displayed for item No.35. : Refer to Inspection Procedure L-5 "The headlamp automatic-shutdown function does not work normally P.54C-224."
Normal condition is not displayed for item No.70. : Replace the front-ECU.

Step 3. Connector check: A-14X front-ECU connector.

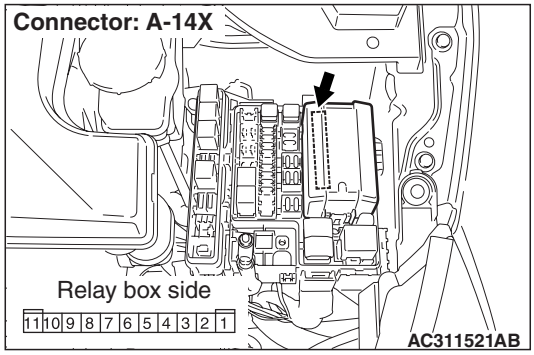

Q: Is the check result normal?
YES : Go to Step 4.
NO : Repair the defective connector.

Step 4. Voltage measurement at A-14X front-ECU connector.

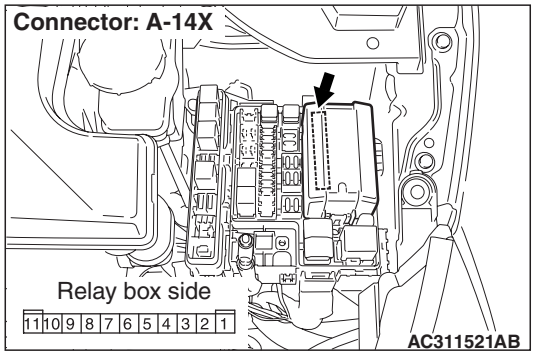

(1) Remove the front-ECU, and measure at the relay box side.

Main Index
Group TOC

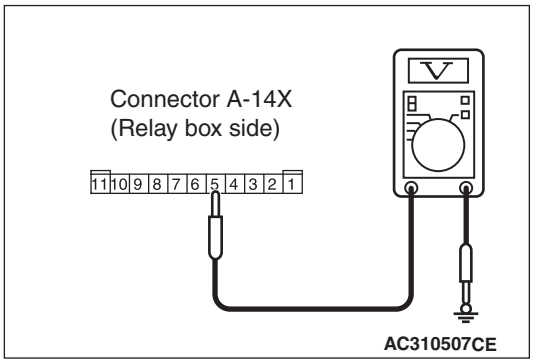

(2) Voltage between A-14X front-ECU connector terminal No.5 and body earth

OK: System voltage

Q: Is the check result normal?

YES : Go to Step 6.
NO : Go to Step 5.

Step 5. Check the wiring harness between A-14X front-ECU connector terminal No.5 and the fusible link (26).

- Check the power supply line for open circuit.

Q: Is the check result normal?

YES : The trouble can be an intermittent malfunction (Refer to GROUP 00 – How to Cope with Intermittent Malfunction P.00-5).
NO : Repair the wiring harness.

Step 6. Retest the system.

Check that the tail/stop lamps illuminate normally.

Q: Is the check result normal?

YES : The trouble can be an intermittent malfunction (Refer to GROUP 00 – How to Cope with Intermittent Malfunction P.00-5).
NO : Replace the front-ECU.

INSPECTION PROCEDURE L-2: The low-beam headlamps do not illuminate normally.

⚠ CAUTION

Whenever the ECU is replaced, ensure that the input and output signal circuits are normal.

Headlamp Relay (Low-Beam) Circuit

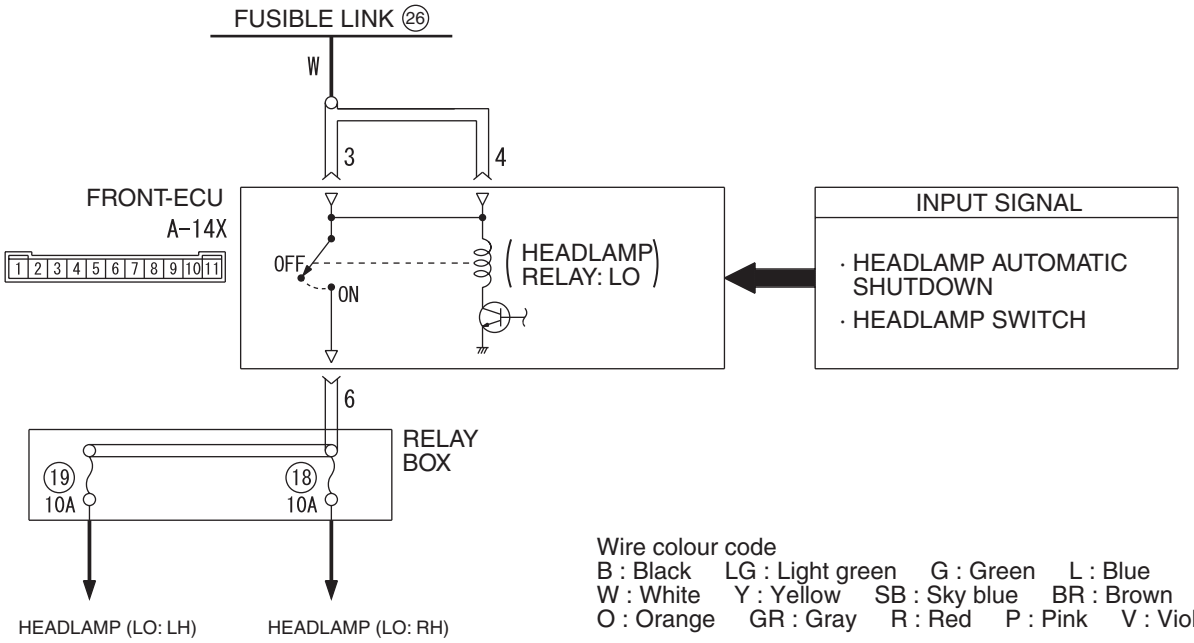

COMMENTS ON TROUBLE SYMPTOM

If the low-beam headlamps do not illuminate, the headlamp switch input circuit or the front-ECU may be defective.

POSSIBLE CAUSES

- Malfunction of the column switch
- Malfunction of the front-ECU
- Damaged harness wires and connectors

Main Index
Group TOC

DIAGNOSIS PROCEDURE

Step 1. ECU check by using the SWS monitor.
Check that the power supply and earth lines to the column switch (column-ECU) and the front-ECU and the SWS communication lines are normal.
- Ignition switch: OFF

ECUS TO BE CHECKED
- COLUMN ECU
- FRONT ECU

OK: "OK" are displayed for all the items

Q: Are the check result normal?
"OK" are displayed for all the items : Go to Step 2.
"NG" is displayed on the "COLUMN ECU" menu. : Refer to Inspection Procedure A-2 "Communication with column switch (column-ECU) is not possible P.54C-45."
"NG" is displayed on the "FRONT ECU" menu. : Refer to Inspection Procedure A-4 "Communication with front-ECU is not possible P.54C-58."

Step 2. Function diagnosis by using the SWS monitor.
Check the SWS communication signal, which are related to the low-beam headlamps.

<Selected item> LIGHTING - HEADLAMP LO
- Ignition switch: ON
- Lighting switch: HEAD

Item No.	Item name	Normal condition
Item 00	HEADLAMP SW	ON
Item 03	PASSING SW	OFF
Item 30	IG SW(IG1)	ON
Item 35	HD AUTO-CUT	OFF
Item 70	FRONT ECU ACK	NORMAL ACK

OK: Normal conditions are displayed for all the items

Q: Are the check result normal?
Normal conditions are displayed for all the items. : Go to Step 3.
Normal condition is not displayed for item No.00 or 03. : Refer to inspection procedure P-6 "The column switch (lighting and turn-signal lamp switch) signal is not received P.54C-350."
Normal condition is not displayed for item No.30. : Refer to inspection procedure P-2 "The ignition switch (IG1) signal is not received P.54C-335."
Normal condition is not displayed for item No.35. : Refer to Inspection Procedure L-5 "The headlamp automatic-shutdown function does not work normally P.54C-224."
Normal condition is not displayed for item No.70. : Replace the front-ECU.

Step 3. Connector check: A-14X front-ECU connector.

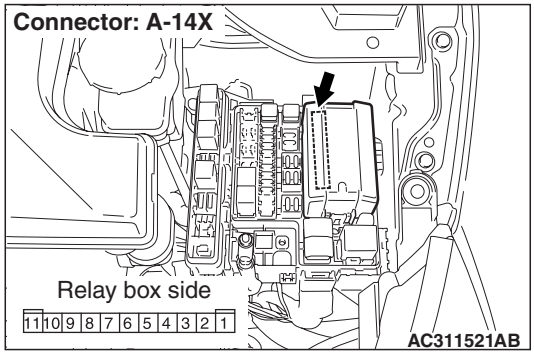

Q: Is the check result normal?
YES : Go to Step 4.
NO : Repair the defective connector.

Step 4. Voltage measurement at A-14X front-ECU connector.

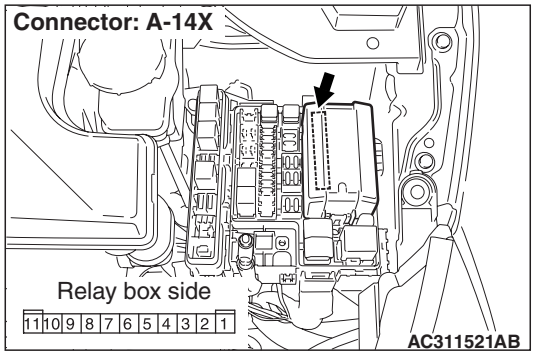

(1) Remove the front-ECU, and measure at the relay box side.

Main Index
Group TOC

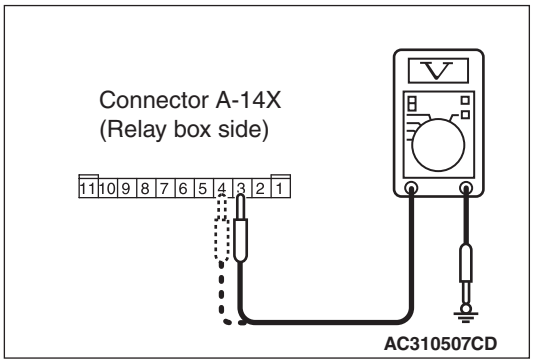

(2) Voltage between A-14X front-ECU connector terminal Nos. 3, 4 and body earth

OK: System voltage

Q: Is the check result normal?

YES : Go to Step 6.

NO : Go to Step 5.

Step 5. Check the wiring harness between A-14X front-ECU connector terminal Nos. 3, 4 and the fusible link (26).

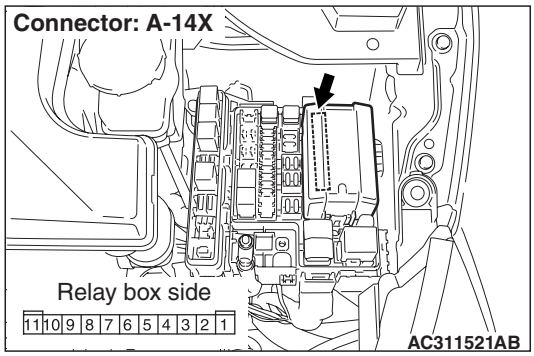

- Check the power supply line for open circuit.

Q: Is the check result normal?

YES : The trouble can be an intermittent malfunction (Refer to GROUP 00 – How to Cope with Intermittent Malfunction P.00-5).

NO : Repair the wiring harness.

Step 6. Retest the system.

Check that the low-beam headlamps illuminate normally.

Q: Is the check result normal?

YES : The trouble can be an intermittent malfunction (Refer to GROUP 00 – How to Cope with Intermittent Malfunction P.00-5).

NO : Replace the front-ECU.

Main Index
Group TOC

INSPECTION PROCEDURE L-3: The high-beam headlamps do not illuminate normally.

⚠ CAUTION
Whenever the ECU is replaced, ensure that the input and output signal circuits are normal.

Headlamp Relay (High-Beam) Circuit

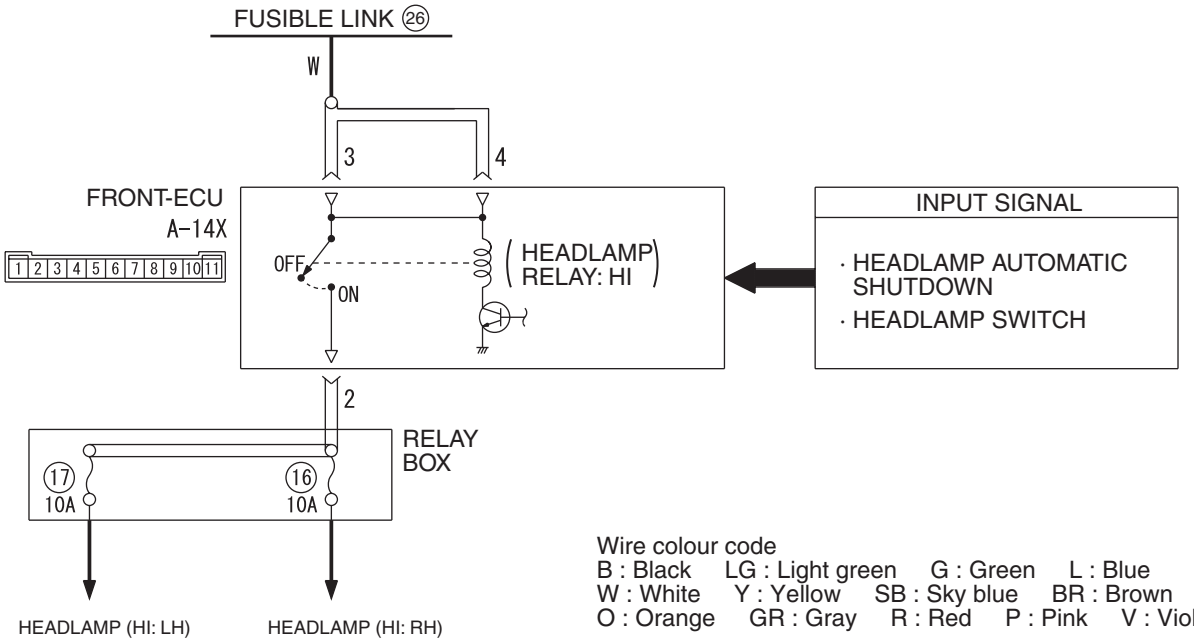

Wire colour code
B : Black LG : Light green G : Green L : Blue
W : White Y : Yellow SB : Sky blue BR : Brown
O : Orange GR : Gray R : Red P : Pink V : Violet

W4X54E28AA

COMMENTS ON TROUBLE SYMPTOM

If the high-beam headlamps do not illuminate, the dimmer switch input circuit or the front-ECU may be defective.

POSSIBLE CAUSES

- Malfunction of the column switch
- Malfunction of the front-ECU
- Damaged harness wires and connectors

DIAGNOSIS PROCEDURE

Step 1. ECU check by using the SWS monitor.
Check that the power supply and earth lines to the column switch (column-ECU) and the front-ECU and the SWS communication lines are normal.

- Ignition switch: OFF

ECUS TO BE CHECKED

- COLUMN ECU
- FRONT ECU

OK: "OK" are displayed for all the items

Q: Are the check result normal?

"OK" are displayed for all the items : Go to Step 2.

"NG" is displayed on the "COLUMN ECU" menu. :
Refer to Inspection Procedure A-2 "Communication with column switch (column-ECU) is not possible P.54C-45."

"NG" is displayed on the "FRONT ECU" menu. :
Refer to Inspection Procedure A-4 "Communication with front-ECU is not possible P.54C-58."

Main Index
Group TOC

Step 2. Function diagnosis by using the SWS monitor.
Check the SWS communication signal, which are related to the high-beam headlamps.

<Selected item> LIGHTING - HEADLAMP HI
- Ignition switch: ON
- Lighting switch: HEAD
- Dimmer switch: from OFF to ON, and then to OFF again

Item No.	Item name	Normal condition
Item 00	HEADLAMP SW	ON
Item 02	DIMMER SW	from OFF to ON, and then to OFF again ("ON" should be displayed when the dimmer switch is operated)
Item 03	PASSING SW	OFF
Item 30	IG SW(IG1)	ON
Item 35	HD AUTO-CUT	OFF
Item 70	FRONT ECU ACK	NORMAL ACK

OK: Normal conditions are displayed for all the items

Q: Are the check result normal?
Normal conditions are displayed for all the items. : Go to Step 3.
Normal condition is not displayed for item Nos.00, 02 or 03. : Refer to inspection procedure P-6 "The column switch (lighting and turn-signal lamp switch) signal is not received P.54C-350."
Normal condition is not displayed for item No.30. : Refer to inspection procedure P-2 "The ignition switch (IG1) signal is not received P.54C-335."
Normal condition is not displayed for item No.35. : Refer to Inspection Procedure L-5 "The headlamp automatic-shutdown function does not work normally P.54C-224."
Normal condition is not displayed for item No.70. : Replace the front-ECU.

Step 3. Retest the system.
Check that the high-beam headlamps illuminate normally.

Q: Is the check result normal?
YES : The trouble can be an intermittent malfunction (Refer to GROUP 00 – How to Cope with Intermittent Malfunction P.00-5).
NO : Replace the front-ECU.

INSPECTION PROCEDURE L-4: The high-beam and low-beam headlamps do not illuminate when the passing switch is operated.

⚠ CAUTION
Whenever the ECU is replaced, ensure that the input and output signal circuits are normal.

COMMENTS ON TROUBLE SYMPTOM
If the low-beam and high-beam headlamps are normal, the passing switch input signal circuit or the front-ECU may be defective.

POSSIBLE CAUSES
- Malfunction of the column switch
- Malfunction of the front-ECU
- Damaged harness wires and connectors

DIAGNOSIS PROCEDURE

Step 1. Check the operation of the headlamps.
Check that the low-beam and high-beam headlamps illuminate normally.

Q: Is the check result normal?
YES : Go to Step 2.
NO : Repair the headlamps. Refer to trouble symptom chart P.54C-32.

Main Index
Group TOC

Step 2. SWS monitor data list.
Check the ETACS-ECU signals which are related to the headlamps.

<Selected item> COLUMN ECU
- Passing lamp switch: ON

Item No.	Item name	Normal condition
Item 03	PASSING SW	ON

OK: Normal condition is displayed.

Q: Is the check result normal?
YES : Go to Step 3.
NO : Refer to inspection procedure P-6 "The column switch (lighting and turn-signal lamp switch) signal is not received P.54C-350."

Step 3. Retest the system.
When the passing switch is turned on, check if the headlamps illuminate normally.

Q: Is the check result normal?
YES : The trouble can be an intermittent malfunction (Refer to GROUP 00 – How to Cope with Intermittent Malfunction P.00-5).
NO : Replace the front-ECU.

INSPECTION PROCEDURE L-5: The headlamp automatic-shutdown function does not work normally.

⚠ CAUTION
Whenever the ECU is replaced, ensure that the input and output signal circuits are normal.

Headlamp Automatic Shutdown Function

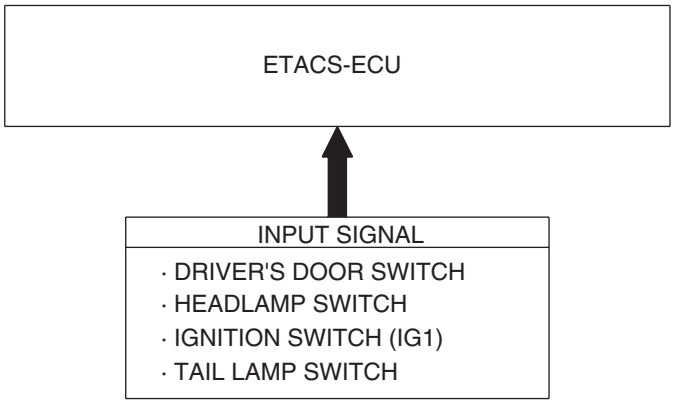

W4X54E162A

COMMENTS ON TROUBLE SYMPTOM

The ETACS-ECU operates this function in accordance with the input signals below.
- Ignition switch (IG1)
- Driver's door switch
- Tail lamp switch
- Headlamp switch

If this function does not work normally, these input signal circuit(s), the front-ECU or the ETACS-ECU may be defective. On vehicles with keyless entry system, note that this function can be disabled/enabled by the customize function (default setting; enabled).

POSSIBLE CAUSES

- Malfunction of the driver's door switch
- Malfunction of the front-ECU
- Malfunction of the column switch
- Malfunction of the ETACS-ECU
- Damaged harness wires and connectors

Main Index
Group TOC

DIAGNOSIS PROCEDURE

Step 1. Customize function by using the SWS monitor.
Check that "Headlamp auto-cut" is set to "Spec.A(Old)" or "Spec.D(DOM)" by using the adjustment function.

Q: Is the check result normal?
YES : Go to Step 2.
NO : Set "Headlamp auto-cut" to "Spec.A(Old)" or "Spec.D(DOM)" by using the adjustment function. (Refer to P.54C-432).

Step 2. ECU check by using the SWS monitor.
Check that the power supply and earth lines to the column switch (column-ECU), the ETACS-ECU and the front-ECU and the SWS communication lines are normal.
- Ignition switch: OFF

ECUS TO BE CHECKED
- COLUMN ECU
- ETACS ECU
- FRONT ECU

OK: "OK" are displayed for all the items

Q: Are the check result normal?
"OK" are displayed for all the items : Go to Step 3.
"NG" is displayed on the "COLUMN ECU" menu. : Refer to Inspection Procedure A-2 "Communication with column switch (column-ECU) is not possible P.54C-45."
"NG" is displayed on the "ETACS ECU" menu. : Refer to Inspection Procedure A-3 "Communication with ETACS-ECU is not possible P.54C-51."
"NG" is displayed on the "FRONT ECU" menu. : Refer to Inspection Procedure A-4 "Communication with front-ECU is not possible P.54C-58."

Step 3. SWS monitor data list.
Check the SWS communication signal, which are related to the headlamp automatic-shutdown function.

<Selected item> LIGHTING - HD AUTO-CUT
- Ignition switch: from ON to OFF
- Lighting switch: "TAIL" or "HEAD"

Item No.	Item name	Normal condition
Item 00	HEADLAMP SW	ON when the lighting switch is at HEAD
Item 01	TAIL LAMP SW	ON when the lighting switch is at TAIL
Item 30	IG SW(IG1)	from ON to OFF
Item 70	FRONT ECU ACK	SLEEP ACK or NORMAL ACK

Check that the M.U.T.-III displays normal condition when the condition above is changed to the condition below.
- Driver's door: open

Item No.	Item name	Normal condition
Item 32	DR DOOR SW	ON
Item 35	HD AUTO-CUT	OFF

OK: Normal conditions are displayed for all the items

Q: Are the check result normal?
Normal conditions are displayed for all the items : Go to Step 4.
Normal condition is not displayed for item Nos.00 or 01. : Refer to inspection procedure P-6 "The column switch (lighting and turn-signal lamp switch) signal is not received P.54C-350."
Normal condition is not displayed for item No.30. : Refer to inspection procedure P-2 "The ignition switch (IG1) signal is not received P.54C-335."
Normal condition is not displayed for item No.32. : Refer to inspection procedure P-5 "The driver's door switch signal is not received P.54C-346 <LH drive vehicles> or P.54C-348 <RH drive vehicles>."
Normal condition is not displayed for item Nos.35 or 70. : Replace the front-ECU.

Main Index
Group TOC

Step 4. Retest the system.

Check that the headlamp automatic-shutdown function works normally.

Q: Is the check result normal?

YES : . The trouble can be an intermittent malfunction (Refer to GROUP 00 – How to Cope with Intermittent Malfunction P.00-5).

NO : . Replace the ETACS-ECU.

Main Index
Group TOC

INSPECTION PROCEDURE L-6: Any of tail lamps, position lamps or licence plate lamp does not illuminate.

⚠ CAUTION

Whenever the ECU is replaced, ensure that the input and output signal circuits are normal.

Tail lamps, Position Lamps and License Plate Lamps Circuit

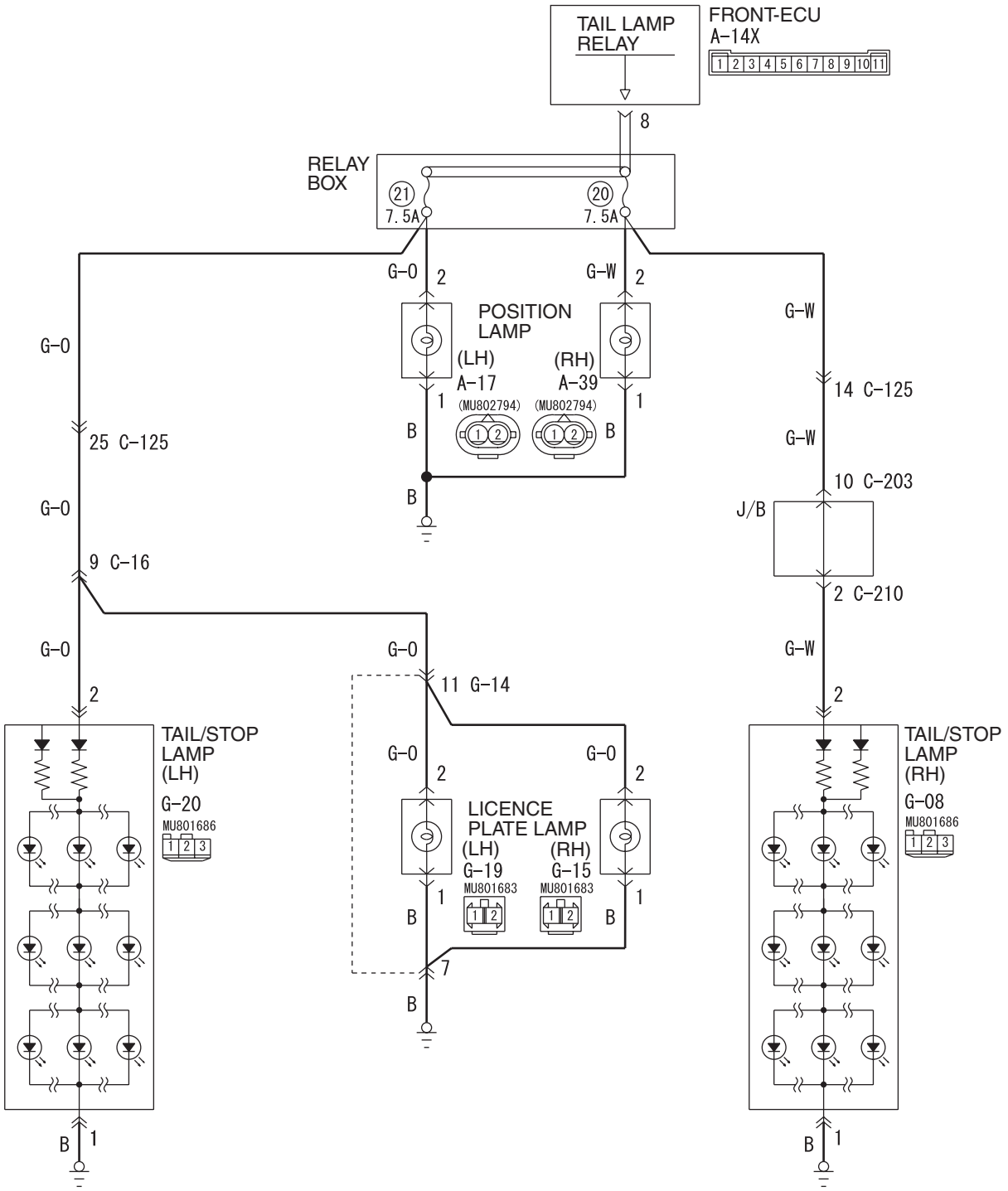

Wire colour code
B : Black LG : Light green G : Green L : Blue W : White Y : Yellow SB : Sky blue
BR : Brown O : Orange GR : Grey R : Red P : Pink V : Violet PU : Purple

W6X54X027A

Main Index
Group TOC

COMMENTS ON TROUBLE SYMPTOM

If the tail lamps, the position lamps or the licence plate lamps do not illuminate, the wiring harness connector(s), the bulb or the fuse may be defective or burned out.

POSSIBLE CAUSES

- Burned-out bulb
- Damaged harness wires and connectors

DIAGNOSIS PROCEDURE

Step 1. Connector check: G-08 tail/stop lamp (RH) connector or G-20 tail/stop lamp (LH) connector, A-39 position lamp (RH) connector or A-17 position lamp (LH) connector, G-15 licence plate lamp (RH) connector or G-19 licence plate lamp (LH) connector.

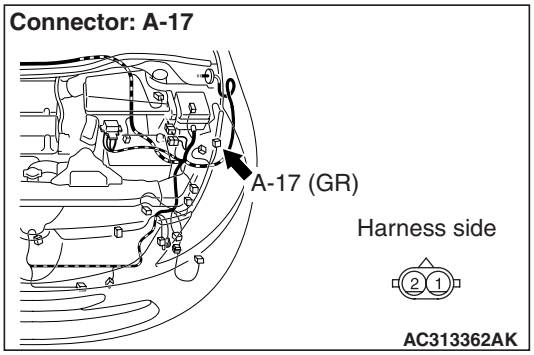

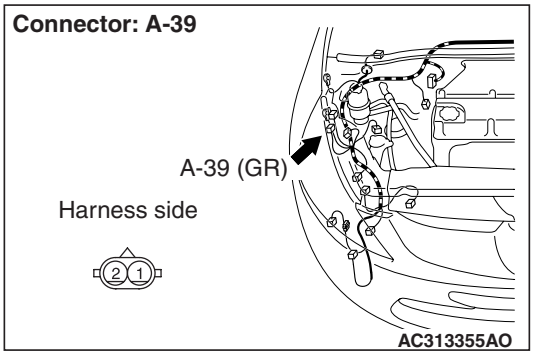

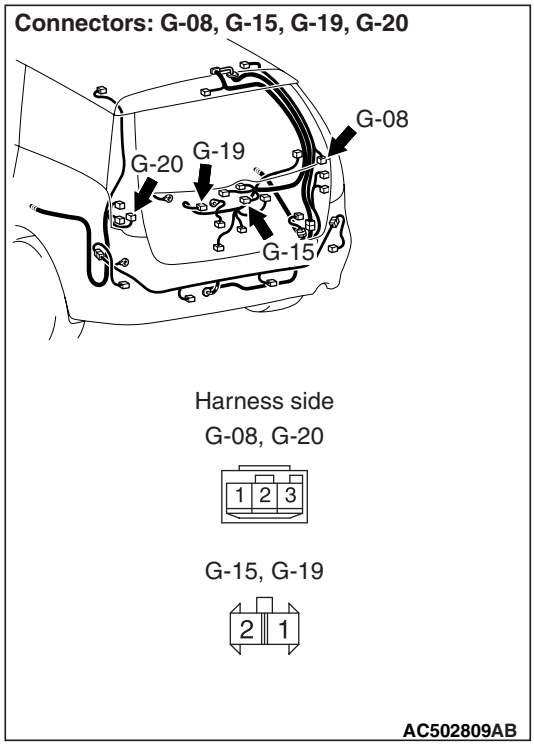

Q: Is the check result normal?
YES : Go to Step 2.
NO : Repair the defective connector.

Step 2. Check the bulbs of the position lamp or the licence plate lamp.

Check the bulb of the lamp which does not illuminate.

Q: Is the check result normal?
YES : Go to Step 3.
NO : Replace the bulb of the lamp which does not illuminate.

Step 3. Resistance measurement at the G-08 tail/stop lamp (RH) connector or G-20 tail/stop lamp (LH) connector, the A-39 position lamp (RH) connector or A-17 position lamp (LH) connector, the G-15 licence plate lamp (RH) connector or G-19 licence plate lamp (LH) connector.

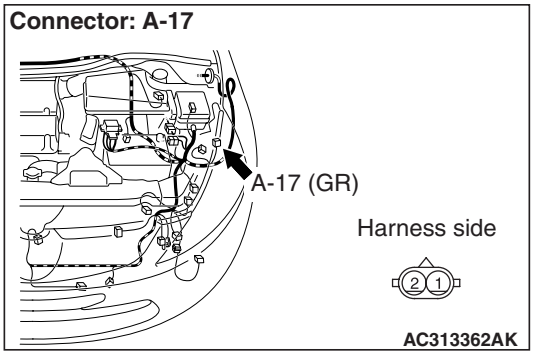

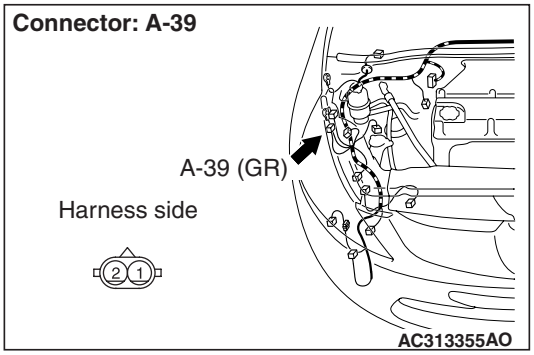

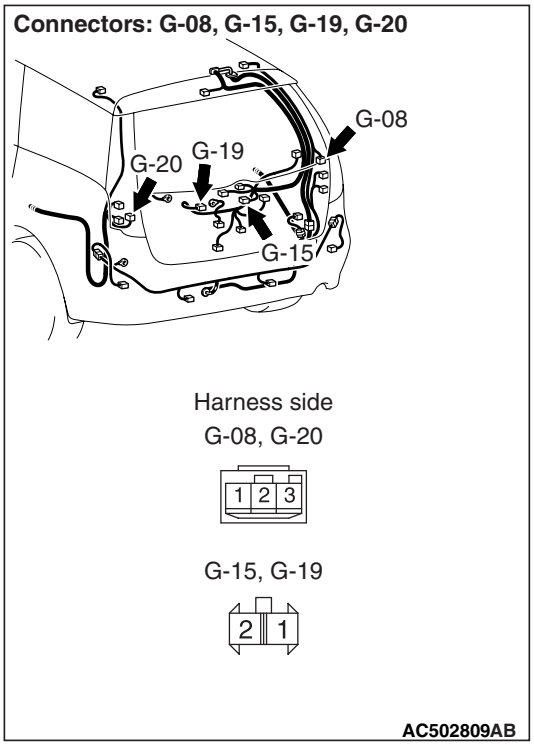

(1) Disconnect the connector, and measure at the wiring harness side.
(2) Check the resistance between the lamp connector and body earth.

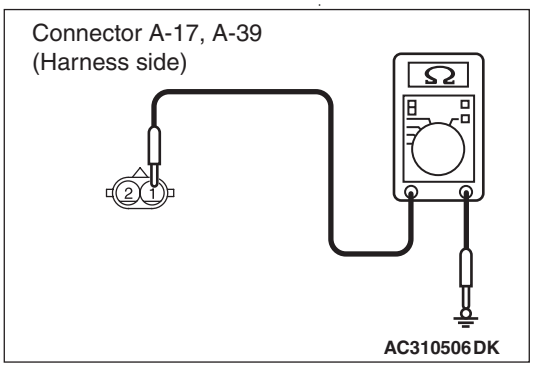

Resistance between A-39 position lamp (RH) connector terminal No.1 and body earth
- Resistance between A-17 position lamp (LH) connector terminal No.1 and body earth

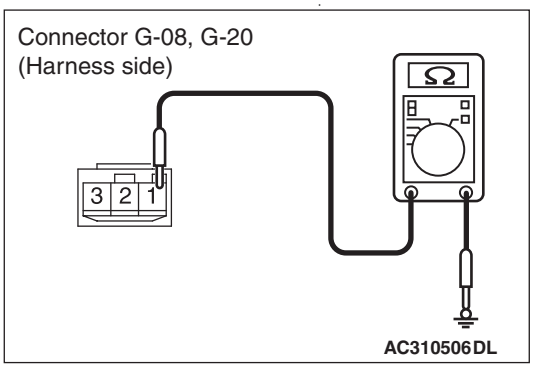

Resistance between G-08 tail/stop lamp (RH) connector terminal No.1 and body earth
- Resistance between G-20 tail/stop lamp (LH) connector terminal No.1 and body earth

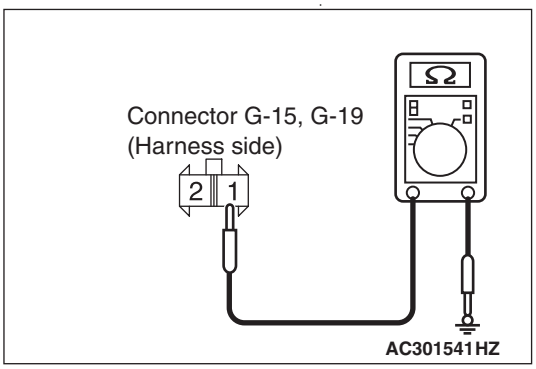

Resistance between G-15 licence plate lamp (RH) connector terminal No.1 and body earth
- Resistance between G-19 licence plate lamp (LH) connector terminal No.1 and body earth

OK: 2 Ω or less

Q: Is the check result normal?
YES : Go to Step 5.
NO : Go to Step 4.

Main Index
Group TOC

Step 4. Check the wiring harness from G-08 tail/stop lamp (RH) connector terminal No.1, G-20 tail/stop lamp (LH) connector terminal No.1, G-15 licence plate lamp (RH) connector terminal No.1 or G-19 licence plate lamp (LH) connector terminal No.1 to body earth, or A-39 position lamp (RH) connector terminal No.1 or A-17 position lamp (LH) connector terminal No.1 to body earth.

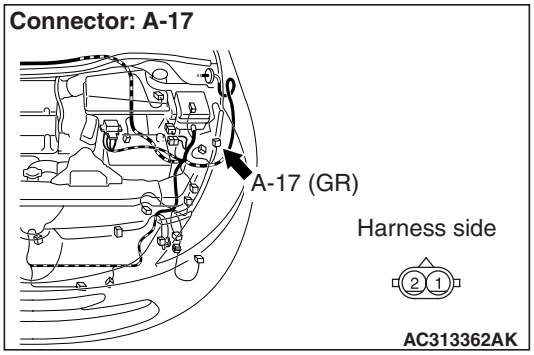

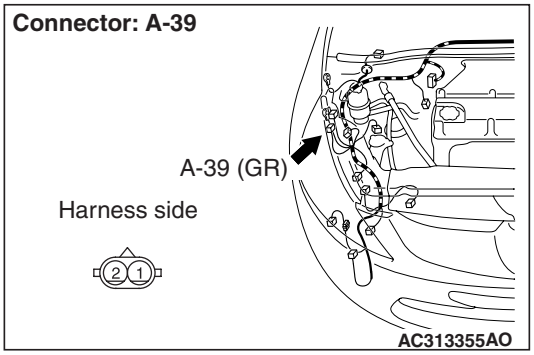

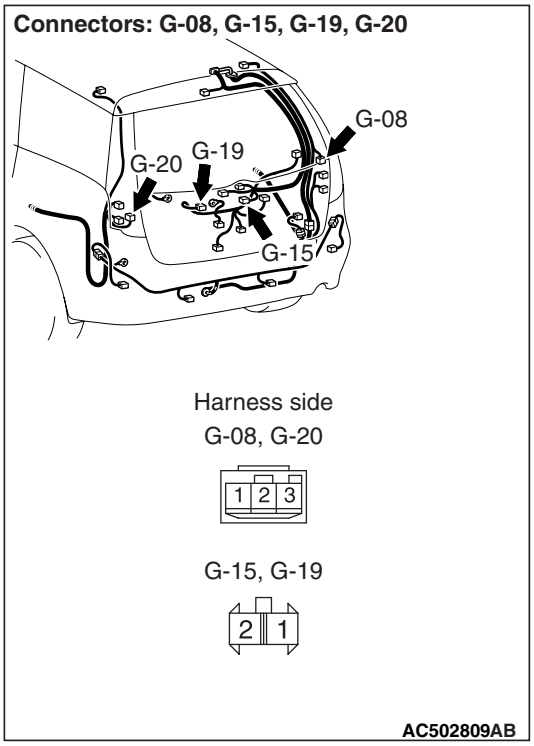

NOTE:

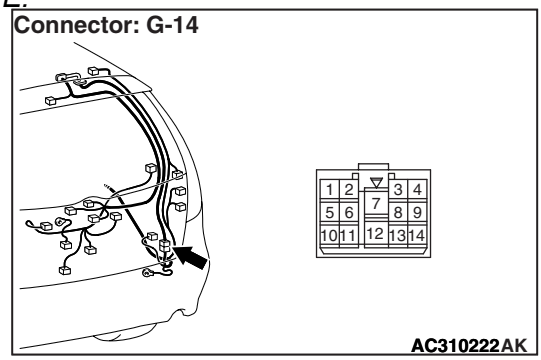

Prior to the wiring harness inspection, check intermediate connector G-14 <licence plate lamp>, and repair if necessary.

- Check the earth wires for open circuit.

Q: Is the check result normal?
YES : Go to Step 6.
NO : Repair the wiring harness.

Step 5. Connector check: A-14X front-ECU connector.

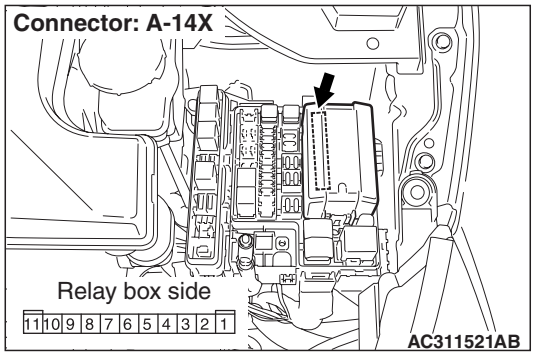

Q: Is the check result normal?
YES : Go to Step 6.
NO : Repair the defective connector.

Step 6. Check the wiring harness from G-08 tail/stop lamp (RH) connector terminal No.2, G-20 tail/stop lamp (LH) connector terminal No.2, A-39 position lamp (RH) connector terminal No.2, A-17 position lamp (LH) connector terminal No.2, G-15 licence plate lamp (RH) connector terminal No.2 or G-19 licence plate lamp (LH) connector terminal No.2 to A-14X front-ECU connector terminal No.8.

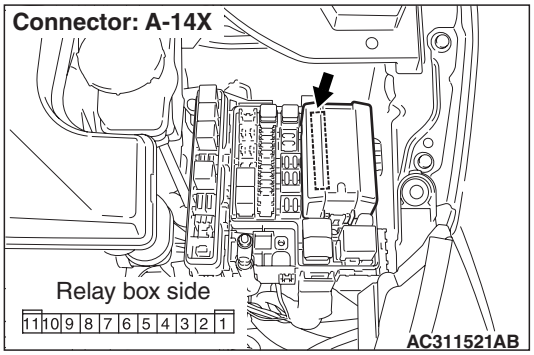

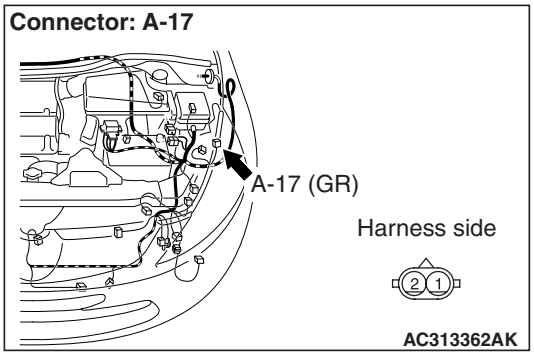

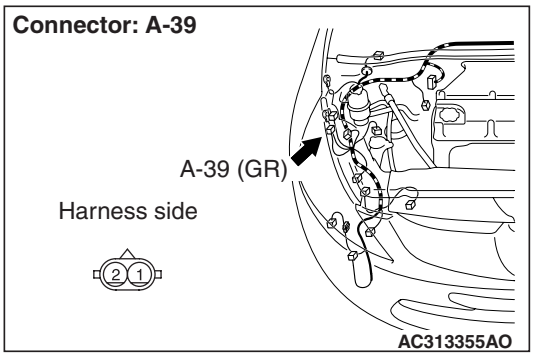

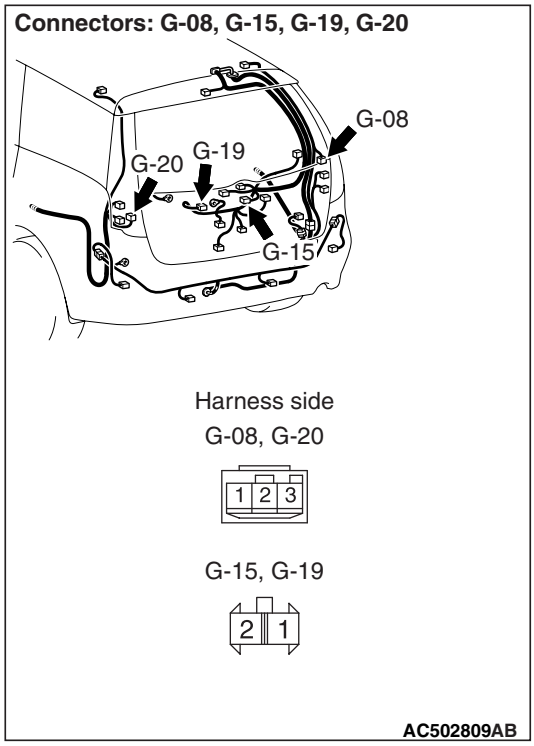

NOTE:

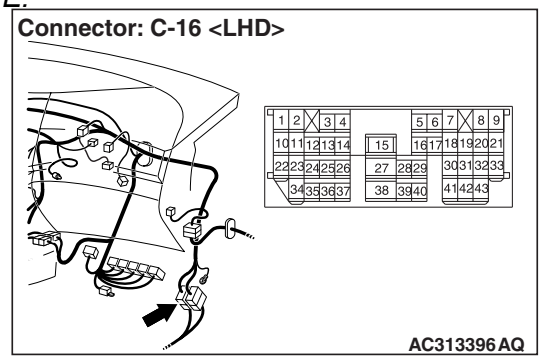

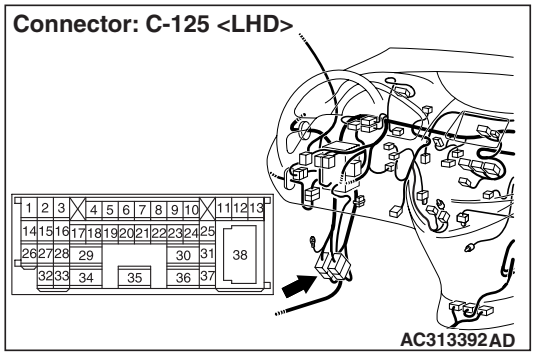

Main Index
Group TOC

Connectors: C-203, C-210 <LHD>
Junction block (Front view)

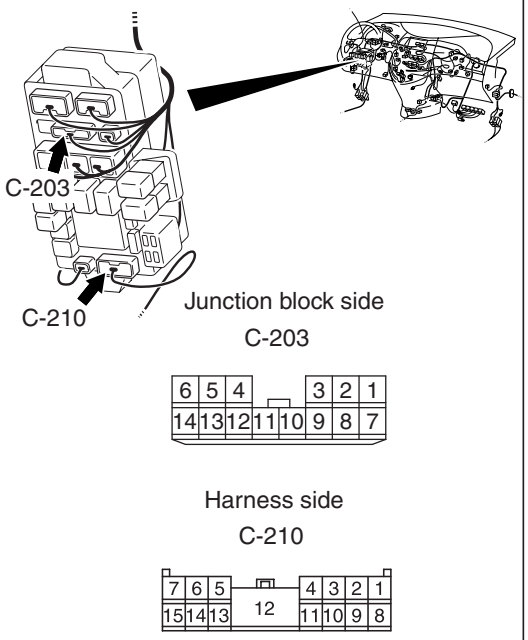

AC313399AR

Connector: G-14

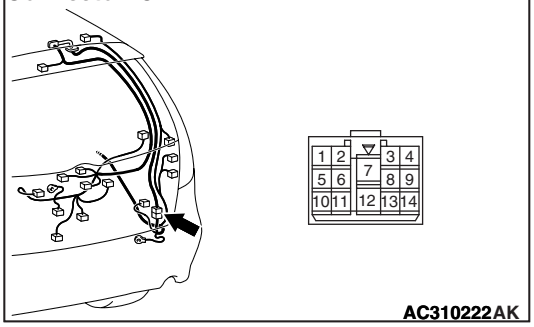

AC310222AK

<LH drive vehicles> Prior to the wiring harness inspection, check intermediate connector C-16 <tail/stop lamp (LH) and licence plate lamp>, C-125 <tail/stop lamp and licence plate lamp>, G-14 <licence plate lamp>, junction block connector C-203 <tail/stop lamp (RH)> and C-210 <tail/stop lamp (RH)>, and repair if necessary.

NOTE:

Connectors: C-16 <RHD>

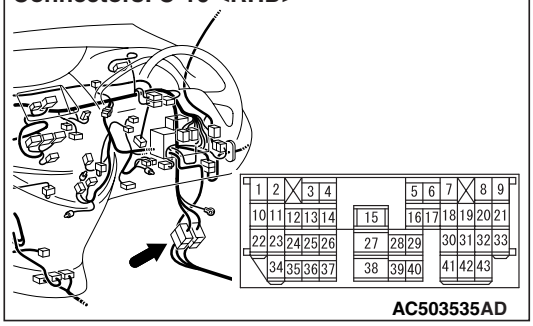

AC503535AD

Connector: C-125 <RHD>

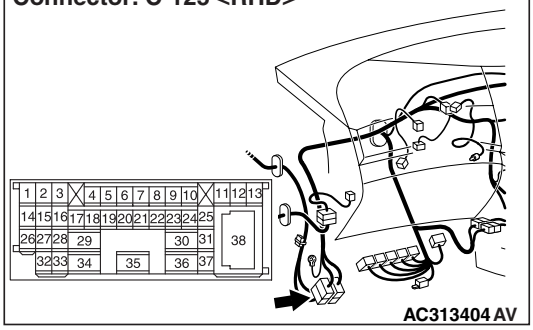

AC313404AV

Connectors: C-203, C-210 <RHD>
Junction block (Front view)

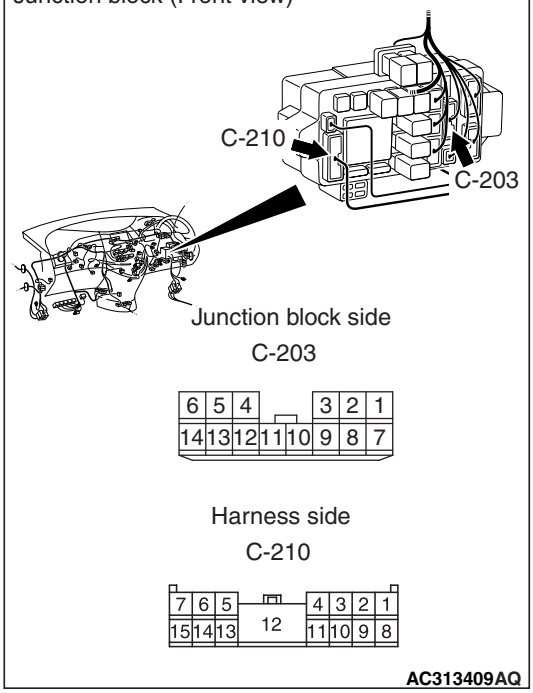

AC313409AQ

Main Index
Group TOC

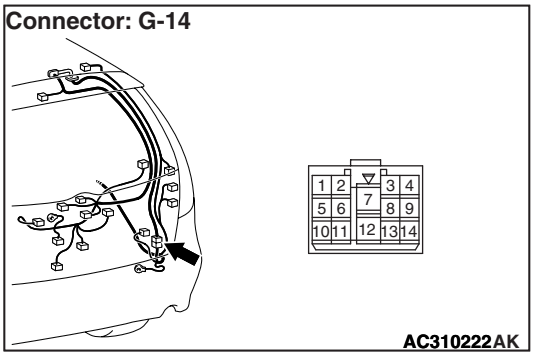

<RH drive vehicles> Prior to the wiring harness inspection, check intermediate connector C-16 <tail/stop lamp (LH) and licence plate lamp>, C-125 <tail/stop lamp and licence plate lamp>, G-14 <licence plate lamp>, junction block connector C-203 <tail/stop lamp (LH)> and C-210 <tail/stop lamp (LH)>, and repair if necessary.

- Check the output lines for open circuit.

Q: Is the check result normal?

YES : Go to Step 8.

NO : Repair the wiring harness.

Step 8. Retest the system.

Check that the tail lamps, the position lamps and the licence plate lamps illuminate normally.

Q: Is the check result normal?

The lamps illuminate normally at both high and low beams. : The trouble can be an intermittent malfunction (Refer to GROUP 00 – How to Cope with Intermittent Malfunction P.00-5).

When the tail/stop lamps do not illuminate : Replace the tail/stop lamp socket assembly.

When the position lamps do not illuminate : Replace the position lamp socket.

When the licence plate lamps do not illuminate : Replace the licence plate lamp socket.

Main Index
Group TOC

INSPECTION PROCEDURE L-7: The headlamp(s) do not illuminate.

⚠ CAUTION
Whenever the ECU is replaced, ensure that the input and output signal circuits are normal.

Headlamps Circuit

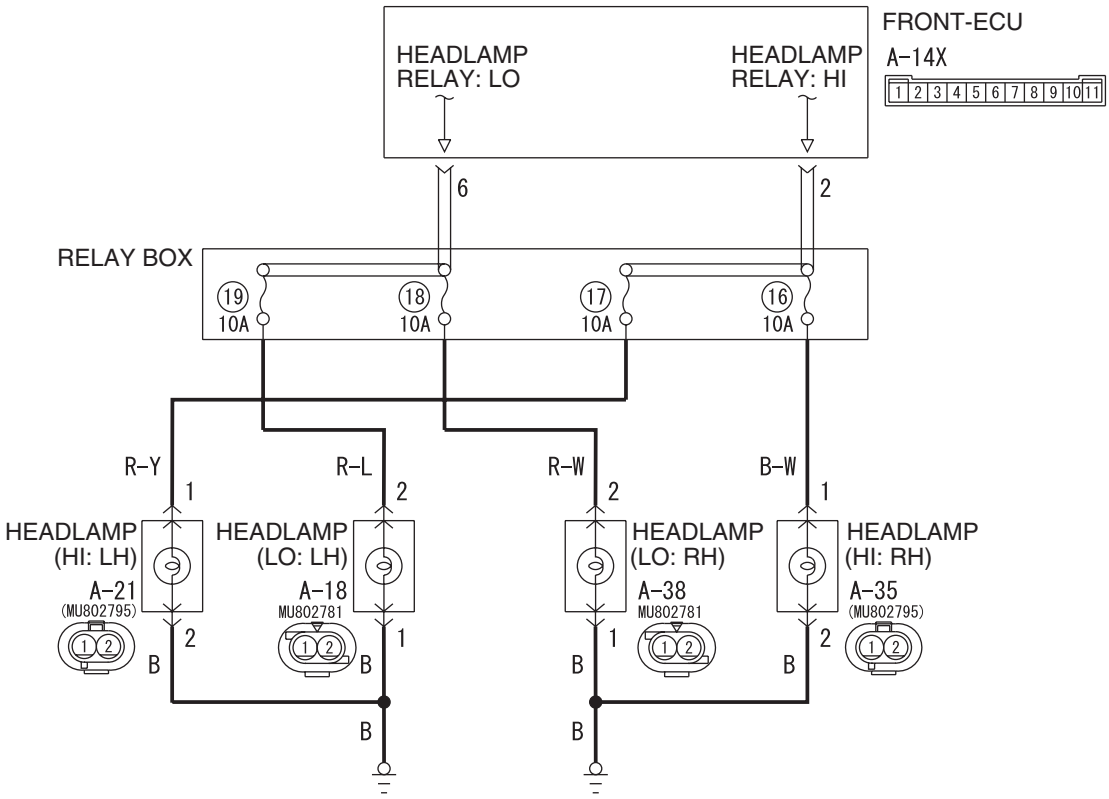

Wire colour code
B : Black LG : Light green G : Green L : Blue W : White Y : Yellow SB : Sky blue
BR : Brown O : Orange GR : Grey R : Red P : Pink V : Violet PU : Purple

W6X54X020A

COMMENTS ON TROUBLE SYMPTOM

If any of the headlamps does not illuminate, the wiring harness connector(s), the bulb or the fuse may be defective or burned out.

POSSIBLE CAUSES

- Malfunction of the headlamp bulbs
- Damaged harness wires and connectors

Main Index
Group TOC

DIAGNOSIS PROCEDURE

Step 1. Connector check: A-35 head lamp (HI: RH) connector or A-21 head lamp (HI: LH) connector, A-38 head lamp (LO: RH) connector or A-18 head lamp (LO: LH) connector.

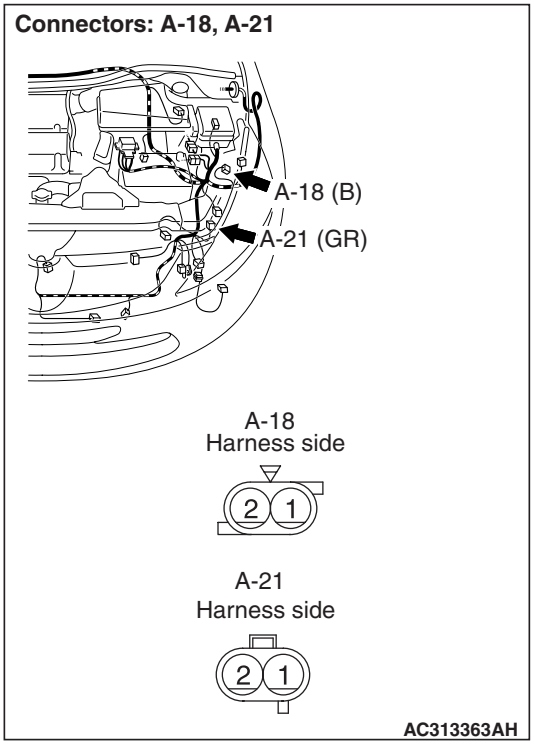

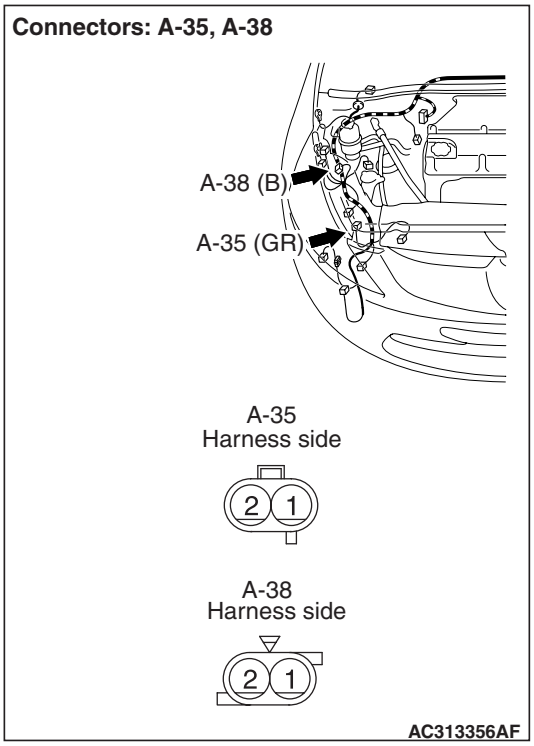

Q: Is the check result normal?
YES : Go to Step 2.
NO : Repair the defective connector.

Step 2. Check the bulbs of the head lamp.
Check the bulb of the lamp which does not illuminate.

Q: Is the check result normal?
YES : Go to Step 3.
NO : Replace the bulb of the lamp which does not illuminate.

Main Index
Group TOC

Step 3. Resistance measurement at the A-35 head lamp (HI: RH) connector or A-21 head lamp (HI: LH) connector, A-38 head lamp (LO: RH) connector or A-18 head lamp (LO: LH) connector.

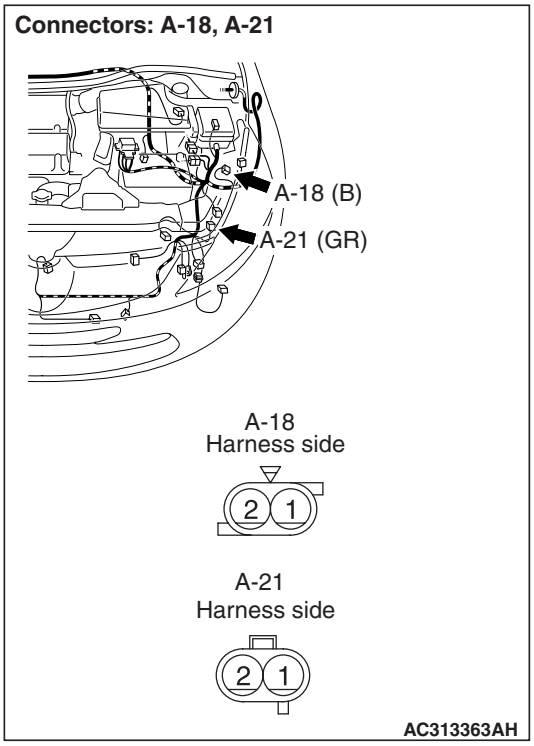

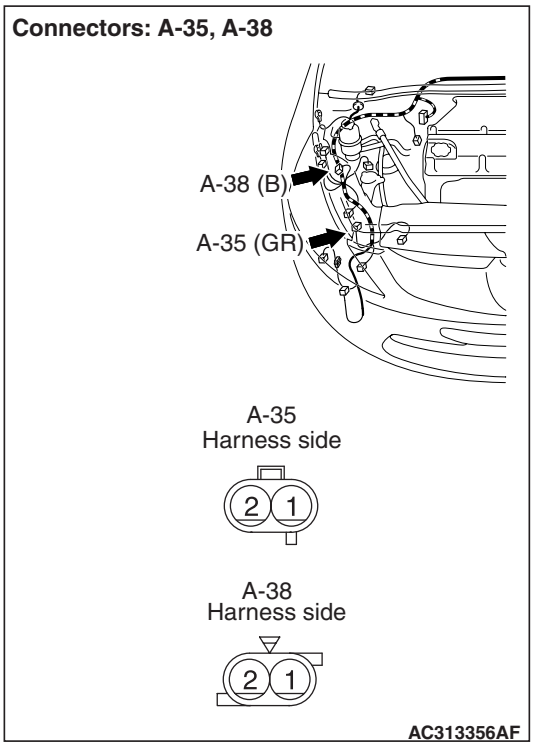

(1) Disconnect the connector, and measure at the wiring harness side.
(2) Check the resistance between the lamp connector and body earth.

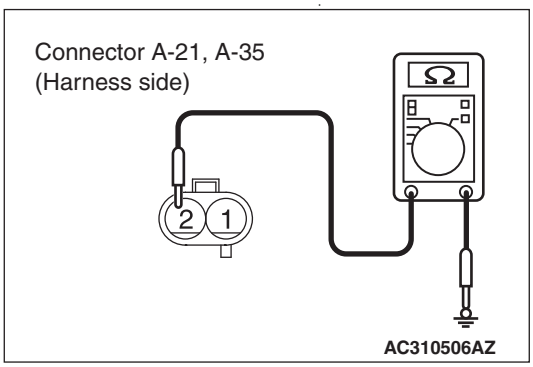

Resistance between A-35 headlamp (HI: RH) connector terminal No.2 and body earth
- Resistance between A-21 headlamp (HI: LH) connector terminal No.2 and body earth

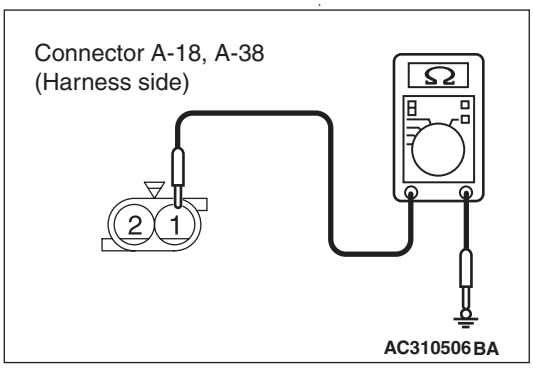

Resistance between A-38 headlamp (LO: RH) connector terminal No.1 and body earth
- Resistance between A-18 headlamp (LO: LH) connector terminal No.1 and body earth

OK: 2 Ω or less

Q: Is the check result normal?
YES : Go to Step 5.
NO : Go to Step 4.

Main Index
Group TOC

Step 4. Check the wiring harness from A-35 head lamp (HI: RH) connector terminal No.2 or A-21 head lamp (HI: LH) connector terminal No.2, A-38 head lamp (LO: RH) connector terminal No.1 or A-18 head lamp (LO: LH) connector terminal No.1 to body earth.

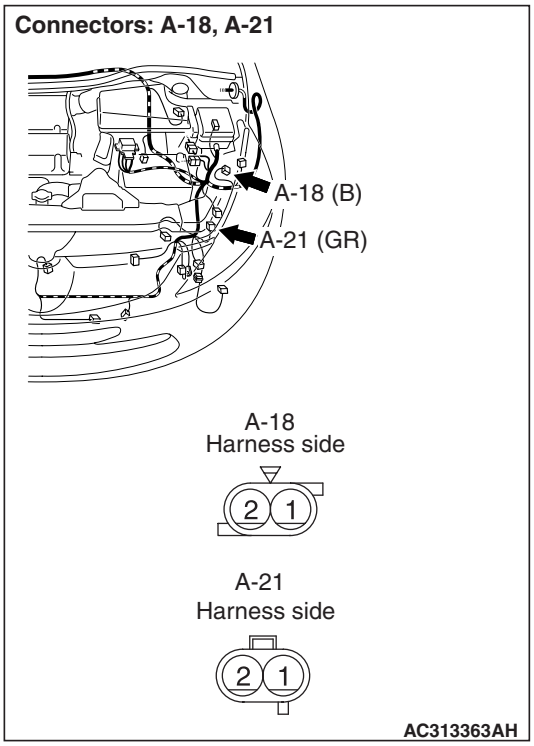

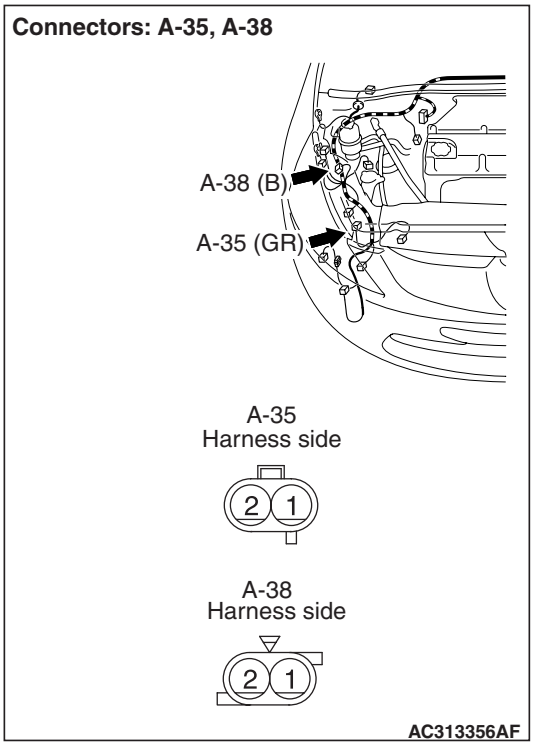

- Check the earth wires for open circuit.

Q: Is the check result normal?
YES : . Go to Step 7.
NO : . Repair the wiring harness.

Step 5. Connector check: A-14X front-ECU connector.

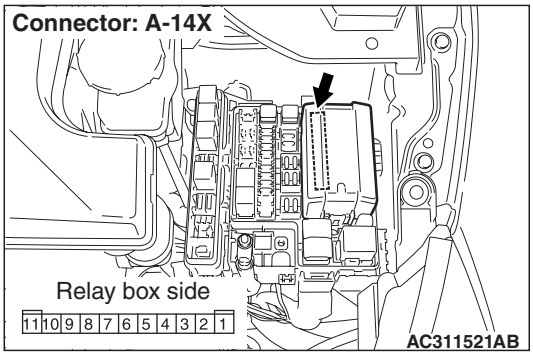

Q: Is the check result normal?
YES : Go to Step 6.
NO : Repair the defective connector.

Main Index
Group TOC

Step 6. Check the wiring harness from A-35 head lamp (HI: RH) connector terminal No.1, A-21 head lamp (HI: LH) connector terminal No.1, A-38 head lamp (LO: RH) connector terminal No.2 or A-18 head lamp (LO: LH) connector terminal No.2 to A-14X front-ECU connector terminal Nos.2 (HI) or 6 (LO).

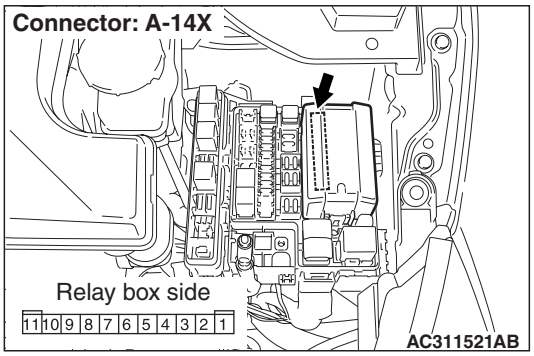

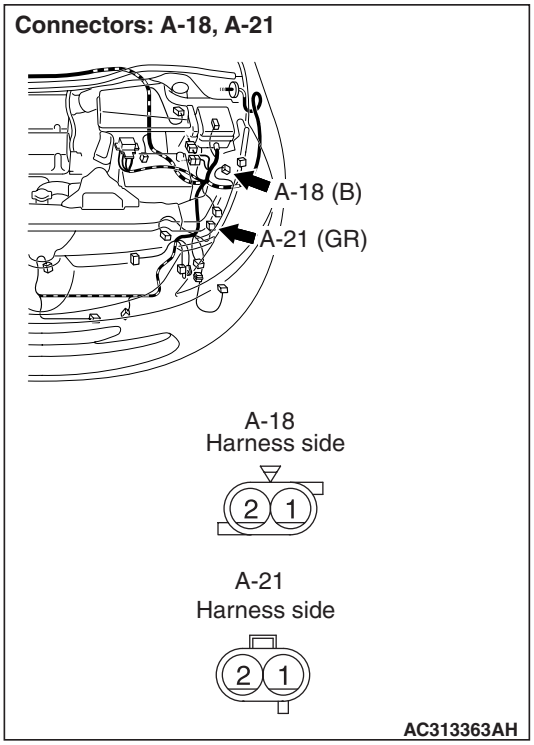

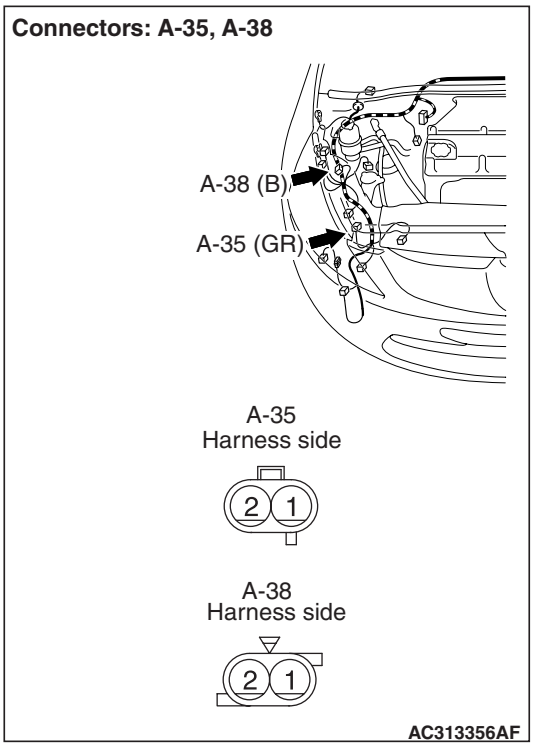

- Check the output lines for open circuit.

Q: Is the check result normal?
YES : Go to Step 7.
NO : Repair the wiring harness.

Step 7. Retest the system.
(1) Replace the socket of the defective headlamp.
(2) Check that the headlamps operate normally.

Q: Is the check result normal?
YES : The trouble can be an intermittent malfunction (Refer to GROUP 00 – How to Cope with Intermittent Malfunction P.00-5).
NO : Replace the headlamp assembly.

Main Index
Group TOC

INSPECTION PROCEDURE L-8: The high-beam indicator lamp does not illuminate.

⚠ CAUTION
Whenever the ECU is replaced, ensure that the input and output signal circuits are normal.

High-Beam Indicator Lamp Circuit

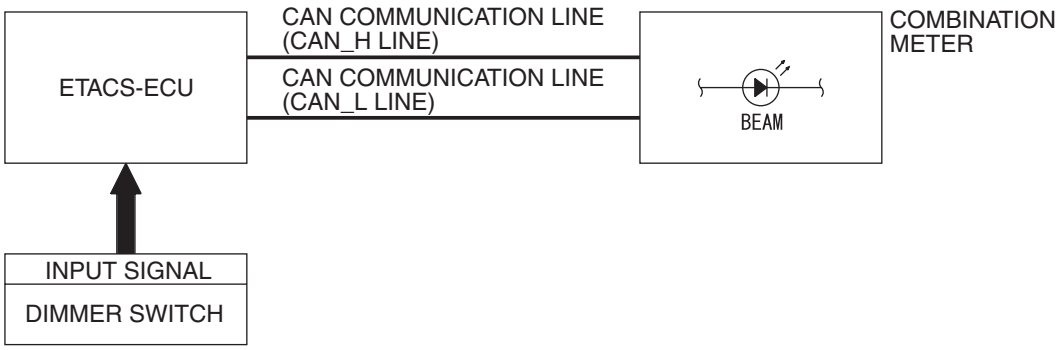

W4X54E031A

COMMENTS ON TROUBLE SYMPTOM

If the high beam indicator does not illuminate normally, connector(s), wiring harness in the CAN bus lines, the ETACS-ECU or the combination meter may be defective.

POSSIBLE CAUSES

- The combination meter may be defective
- The ETACS-ECU may be defective
- Damaged harness wires and connectors

DIAGNOSIS PROCEDURE

Step 1. Check the headlamps.
When the lighting switch is operated, check that the headlamps illuminate/go off normally.

Q: Are the headlamps in good condition?
YES : Go to Step 2.
NO : First, repair the headlamps. Refer to Inspection Procedure L-3 "The high-beam headlamps do not illuminate normally P.54C-222."

Step 2. M.U.T.-III CAN bus diagnostics.
Use the M.U.T.-III to diagnose the CAN bus lines.

Q: Is the check result normal?
YES : Go to Step 3.
NO : Repair the CAN bus line (Refer to GROUP 54F, Diagnosis P.54F-13).

Step 3. Check for combination meter diagnosis code.
Check whether the combination meter-related diagnosis code is set.

Q: Is the diagnosis code set?
YES : Diagnose the combination meter (Refer to GROUP 54A – Troubleshooting P.54A-55).
NO : Go to Step 4.

Step 4. ECU check by using the SWS monitor
Check that the power supply and earth lines to the ETACS-ECU and the SWS communication lines are normal.
- Ignition switch: OFF

ECU TO BE CHECKED
- ETACS ECU

OK: "OK" is displayed on the "ETACS ECU" menu.

Q: Is the check result normal?
YES : Go to Step 5.
NO : Refer to Inspection Procedure A-3 "Communication with the ETACS-ECU is not possible P.54C-51."

Main Index
Group TOC

Step 5. M.U.T.-III actuator test
Perform the actuator test for the combination meter, and check that the high-beam indicator illuminates (Refer to GROUP 54A – Combination Meter P.54A-95).

Q: Is the check result normal?
YES : . Replace the ETACS-ECU.
NO : . Replace the combination meter.

INSPECTION PROCEDURE L-9: The headlamps do not illuminate when the lamping switch is at "TAIL" or "PASSING" position, but illuminate only at low beam when the switch is at "HEAD" position. However, the headlamps do not illuminate at high beam.

⚠ CAUTION
Whenever the ECU is replaced, ensure that the input and output signal circuits are normal.

COMMENTS ON TROUBLE SYMPTOM

If the headlamps illuminate only at low beam regardless of the lighting switch position, the headlamp fail-safe function may be activated.

POSSIBLE CAUSES

- Malfunction of the column switch
- Malfunction of the front-ECU
- Damaged harness wires and connectors

DIAGNOSIS PROCEDURE

Step 1. ECU check by using the SWS monitor.
Check that the power supply and earth lines to the column switch (column-ECU) and the front-ECU and the SWS communication lines are normal.
- Ignition switch: OFF

ECUS TO BE CHECKED
- COLUMN ECU
- FRONT ECU

OK: "OK" are displayed for all the items

Q: Are the check result normal?
"OK" are displayed for all the items : Go to Step 2.
"NG" is displayed on the "COLUMN ECU" menu. : Refer to Inspection Procedure A-2 "Communication with column switch (column-ECU) is not possible P.54C-45."
"NG" is displayed on the "FRONT ECU" menu. : Refer to Inspection Procedure A-4 "Communication with front-ECU is not possible P.54C-58."

Step 2. Retest the system.
Check that the headlamps illuminate normally.

Q: Is the check result normal?
YES : The trouble can be an intermittent malfunction (Refer to GROUP 00 – How to Cope with Intermittent Malfunction P.00-5).
NO : Replace the column switch.

Main Index
Group TOC

FLASHER TIMER

INSPECTION PROCEDURE M-1: The turn-signal lamps do not illuminate.

⚠ CAUTION

Whenever the ECU is replaced, ensure that the input and output signal circuits are normal.

Turn-Signal Lamp Power Supply Circuit

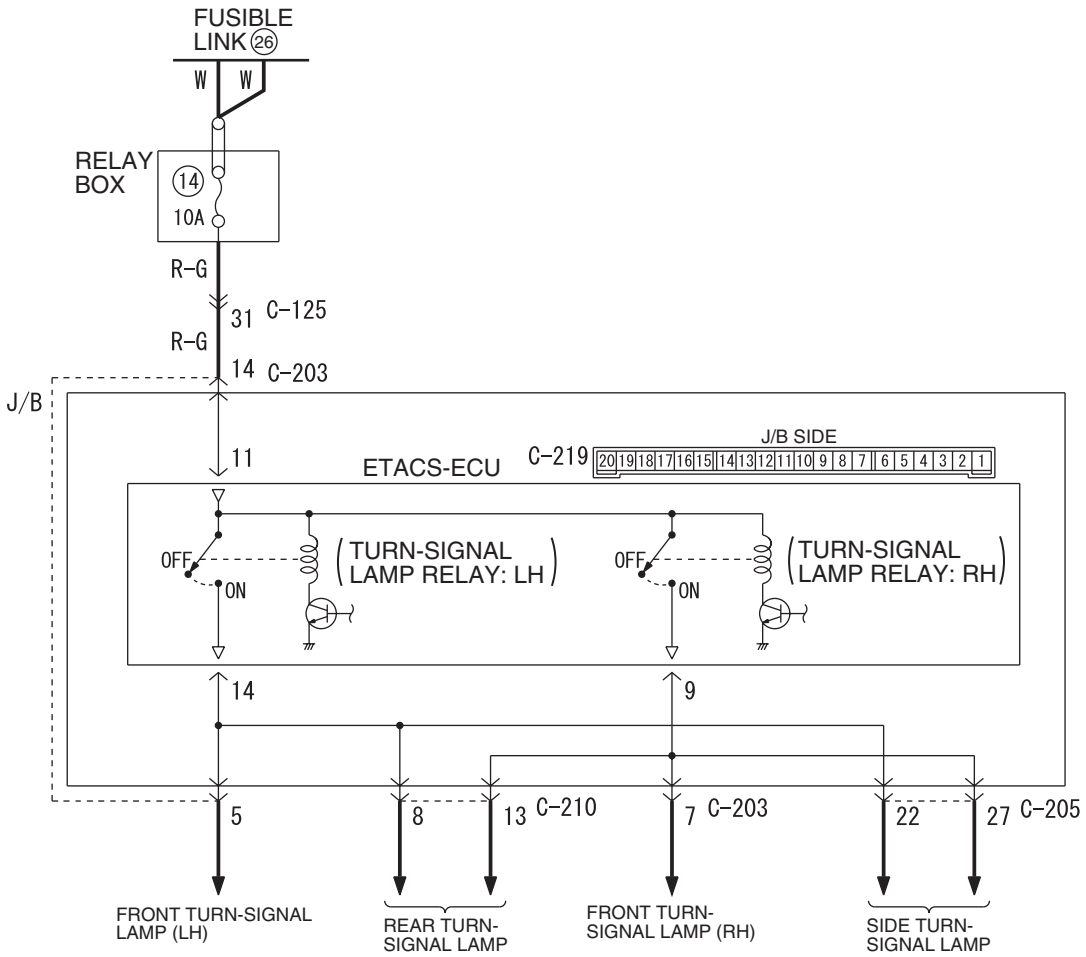

Wire colour code
B : Black LG : Light green G : Green L : Blue W : White Y : Yellow SB : Sky blue
BR : Brown O : Orange GR : Gray R : Red P : Pink V : Violet

W4X54E092A

COMMENTS ON TROUBLE SYMPTOM

If all the turn-signal lamps do not illuminate, the ignition switch (IG1), the turn-signal lamp switch input circuit or the ETACS-ECU may be defective.

POSSIBLE CAUSES

- Malfunction of the column switch
- Malfunction of the ETACS-ECU
- Damaged harness wires and connectors

Main Index
Group TOC

DIAGNOSIS PROCEDURE

Step 1. ECU check by using the SWS monitor.
Check that the power supply and earth lines to the ETACS-ECU and the SWS communication lines are normal.
- Ignition switch: OFF

ECU TO BE CHECKED
- ETACS ECU

OK: "OK" is displayed on the "ETACS ECU" menu.

Q: Is the check result normal?
YES : Go to Step 2.
NO : Refer to Inspection Procedure A-3 "Communication with ETACS-ECU is not possible P.54C-51."

Step 2. Check that the hazard warning lamps operate.
Check that the hazard warning lamps illuminate normally.

Q: Is the check result normal?
YES : Go to Step 6.
NO : Go to Step 3.

Step 3. Connector check: C-219 ETACS-ECU connector.

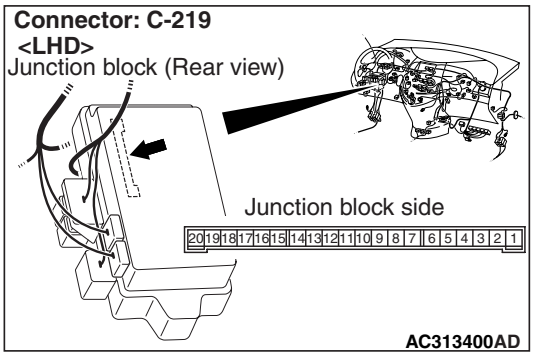

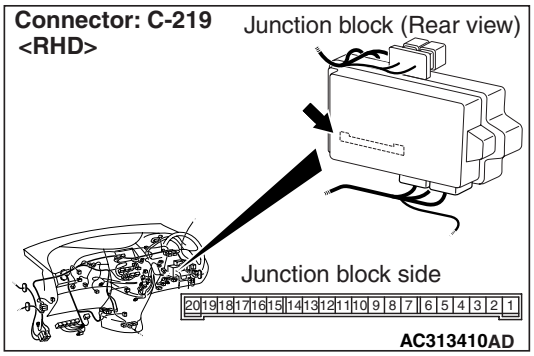

Q: Is the check result normal?
YES : Go to Step 4.
NO : Repair the defective connector.

Step 4. Voltage measurement at the C-219 ETACS-ECU connector.

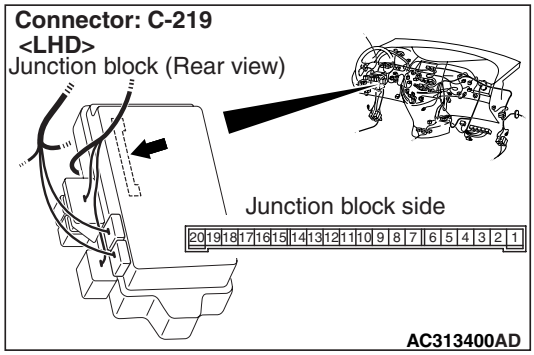

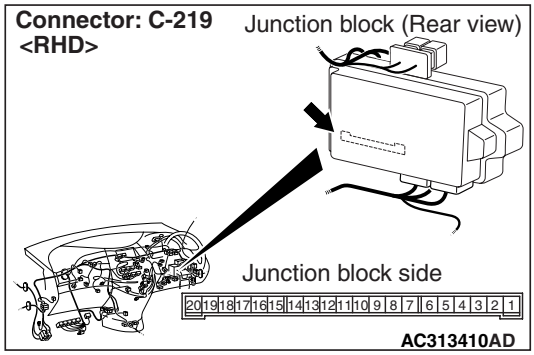

(1) Remove the ETACS-ECU, and measure at the junction block side.

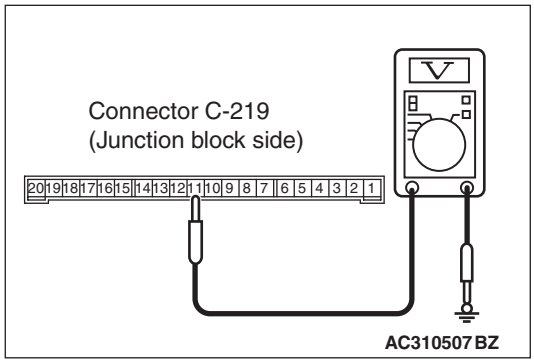

(2) Voltage between C-219 ETACS-ECU connector terminal No.11 and body earth

OK: System voltage

Q: Is the check result normal?
YES : Go to Step 8.
NO : Go to Step 5.

Step 5. Check the wiring harness between C-219 ETACS-ECU connector terminal No.11 and the fusible link (26).

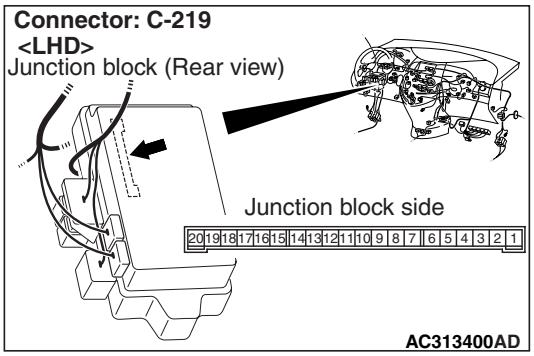

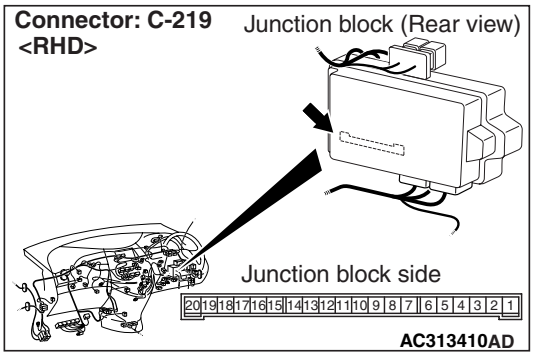

NOTE:

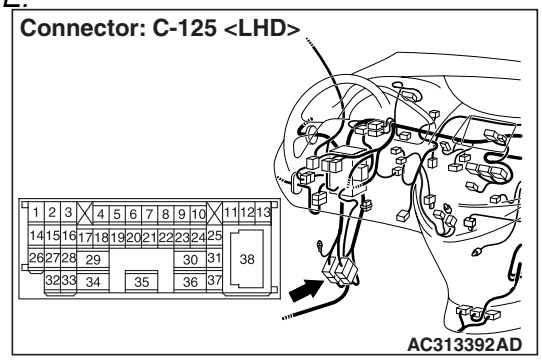

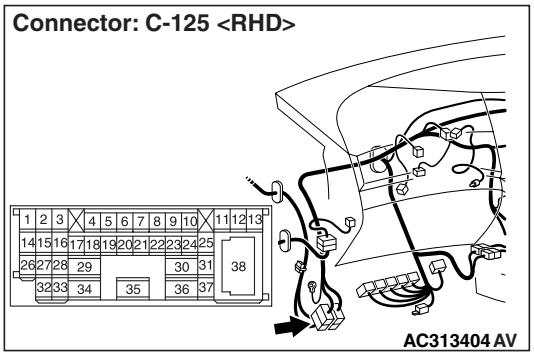

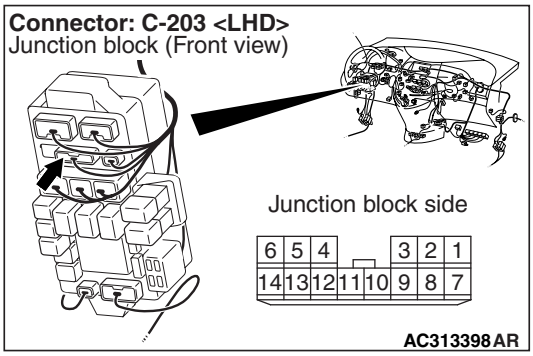

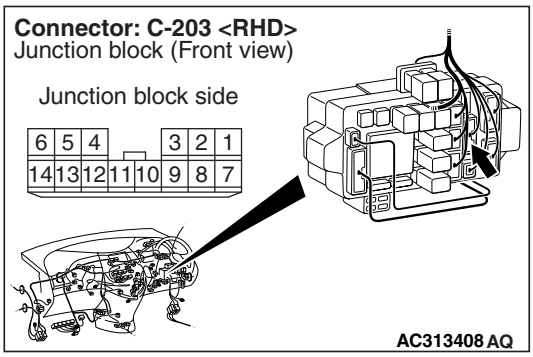

Prior to the wiring harness inspection, check intermediate connector C-125 and junction block connector C-203, and repair if necessary.

- Check the power supply line for open circuit.

Q: Is the check result normal?

YES : Go to Step 8.

NO : Repair the wiring harness.

Main Index
Group TOC

Step 6. Function diagnosis by using the SWS monitor.

Check the SWS communication signal, which are related to the right turn-signal lamps.

<Selected item> TURN SIGNAL - TURN-SIG. RH

- Turn-signal lamp switch: RH
- Ignition switch: ON

Item No.	Item name	Normal condition
Item 10	TURN SIG.RH	ON
Item 11	TURN SIG.LH	OFF
Item 30	IG SW(IG1)	ON

OK: Normal conditions are displayed for all the items

Q: Is the check result normal?

Normal conditions are displayed for all the items. : Go to Step 7.

Normal condition is not displayed for item 10 or 11. : Refer to inspection procedure P-6 "The column switch (lighting and turn-signal lamp switch) signal is not received P.54C-350."

Normal condition is not displayed for item No.30. : Refer to inspection procedure P-2 "The ignition switch (IG1) signal is not received P.54C-335."

Step 7. SWS monitor data list.

Check the SWS communication signal, which are related to the left turn-signal lamps.

<Selected item> TURN SIGNAL - TURN-SIG. LH

- Turn-signal lamp switch: LH
- Ignition switch: ON

Item No.	Item name	Normal condition
Item 10	TURN SIG.RH	OFF
Item 11	TURN SIG.LH	ON

OK: Normal conditions are displayed for all the items.

Q: Is the check result normal?

Normal conditions are displayed for all the items. : Go to Step 8.

Normal condition is not displayed for item 10 or 11. : Refer to inspection procedure P-6 "The column switch (lighting and turn-signal lamp switch) signal is not received P.54C-350."

Step 8. Retest the system.

Check that the turn-signal lamps illuminate.

Q: Is the check result normal?

YES : The trouble can be an intermittent malfunction (Refer to GROUP 00 – How to Cope with Intermittent Malfunction P.00-5).

NO : Replace the ETACS-ECU.

Main Index
Group TOC

INSPECTION PROCEDURE M-2: The hazard warning lamps do not illuminate.

⚠ CAUTION
Whenever the ECU is replaced, ensure that the input and output signal circuits are normal.

Hazard Warning Lamp Circuit

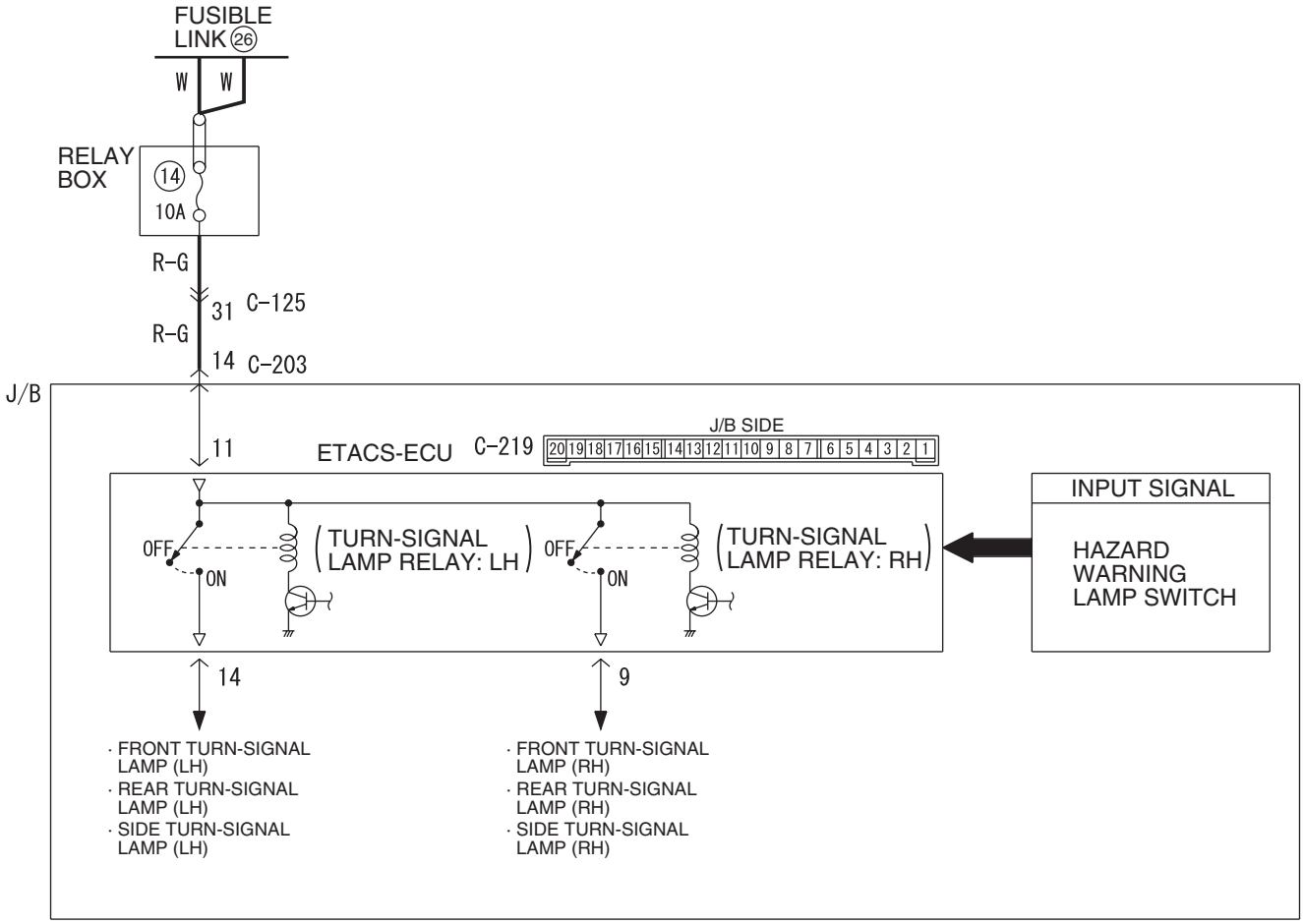

Wire colour code
B : Black LG : Light green G : Green L : Blue W : White Y : Yellow SB : Sky blue
BR : Brown O : Orange GR : Gray R : Red P : Pink V : Violet

W4X54E093A

COMMENTS ON TROUBLE SYMPTOM

If the hazard warning lamps do not illuminate, the hazard warning lamp input signal circuit or the ETACS-ECU may be defective.

POSSIBLE CAUSES

- Malfunction of the hazard warning lamp switch
- Malfunction of the ETACS-ECU
- Damaged harness wires and connectors

DIAGNOSIS PROCEDURE

Step 1. Check that the turn-signal lamps operate.
Check that the turn-signal lamps illuminate normally.

Q: Is the check result normal?
YES : Go to Step 2.
NO : Refer to inspection procedure M-1 "The turn-signal lamps do not illuminate P.54C-241."

Main Index
Group TOC

Step 2. ETACS switch data by using the SWS monitor.

Check the ETACS-ECU signals which are related to the hazard warning lights.

- Hazard lamp switch: ON

Item No.	Item name	Normal condition
Item 04	Hazard lamp switch	ON (only when switch is operated)

OK: Normal condition is displayed.

Q: Is the check result normal?

YES : . Go to Step 3.

NO : . Refer to inspection procedure P-11 "The hazard warning lamp switch signal is not received P.54C-368."

Step 3. Retest the system.

Check that the hazard warning lamps illuminate.

Q: Is the check result normal?

YES : The trouble can be an intermittent malfunction (Refer to GROUP 00 – How to Cope with Intermittent Malfunction P.00-5).

NO : Replace the ETACS-ECU.

Main Index
Group TOC

INSPECTION PROCEDURE M-3: Any of the turn-signal lamps does not illuminate.

⚠ CAUTION
Whenever the ECU is replaced, ensure that the input and output signal circuits are normal.

Left Turn-Signal Lamps Circuit <LHD>

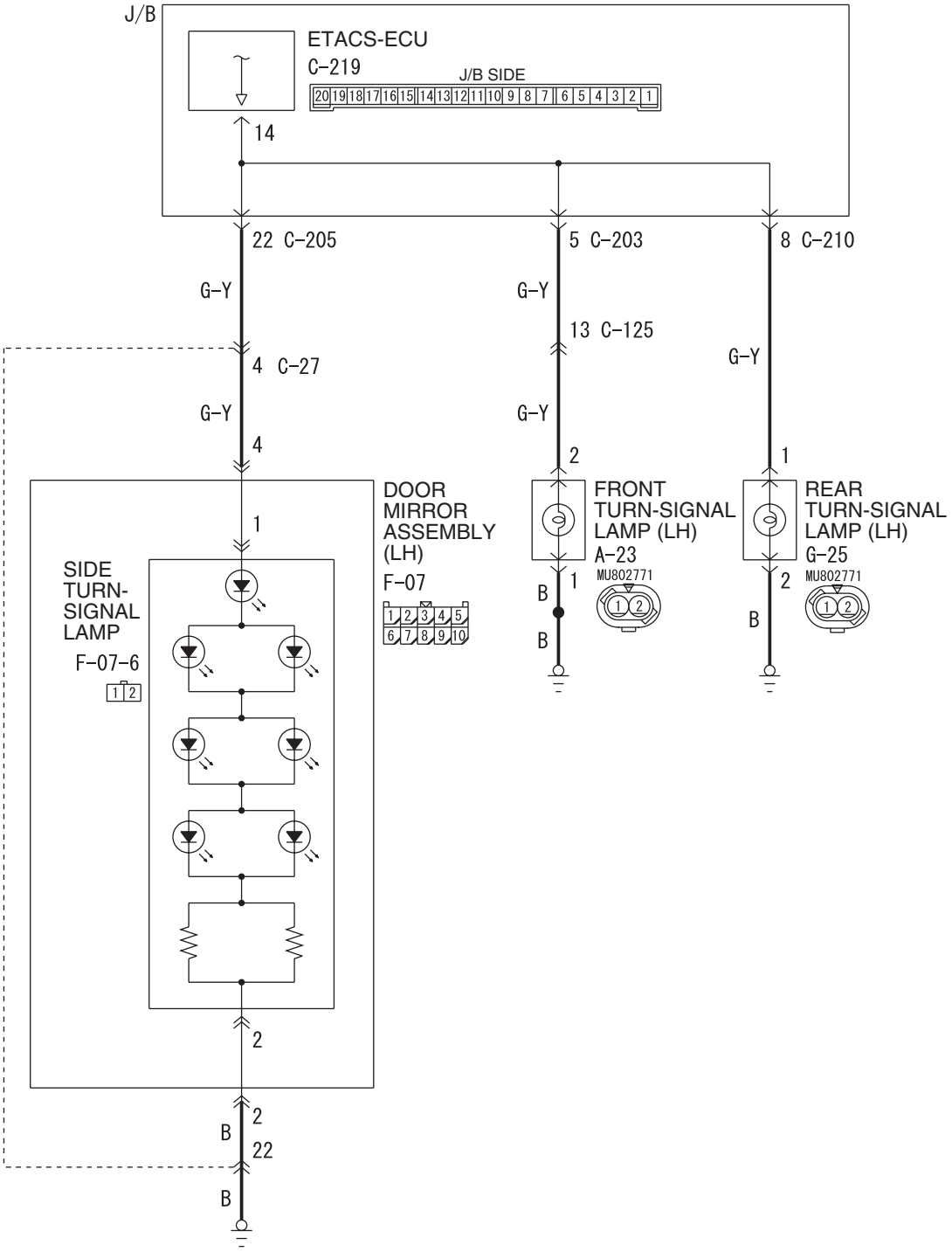

Wire colour code
B : Black LG : Light green G : Green L : Blue W : White Y : Yellow SB : Sky blue
BR : Brown O : Orange GR : Grey R : Red P : Pink V : Violet PU : Purple

W6X54X015A

Main Index
Group TOC

Left Turn-Signal Lamps Circuit <RHD>

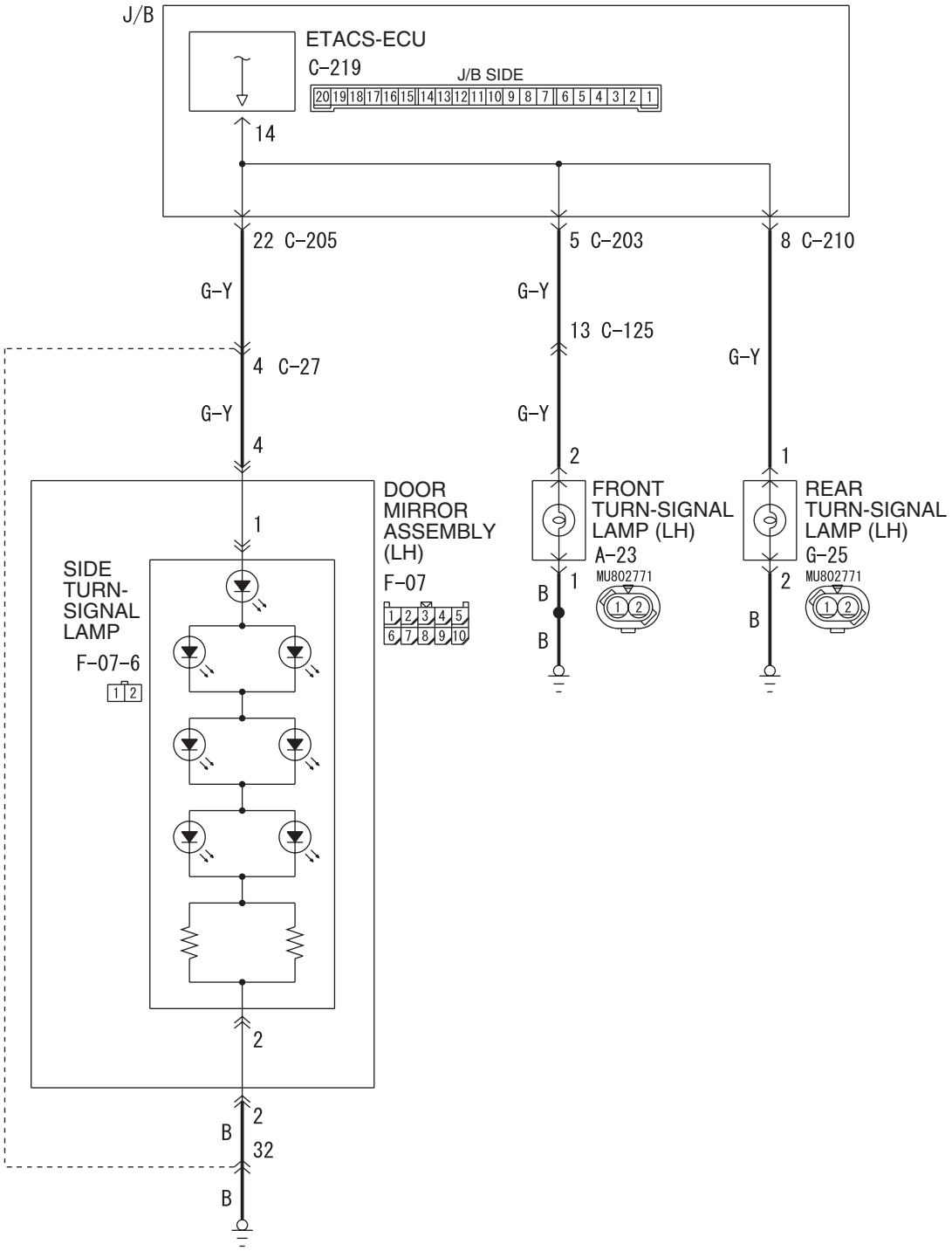

Wire colour code
B : Black LG : Light green G : Green L : Blue W : White Y : Yellow SB : Sky blue
BR : Brown O : Orange GR : Grey R : Red P : Pink V : Violet PU : Purple

W6X54X014A

Main Index
Group TOC

Right Turn-Signal Lamps Circuit <LHD>

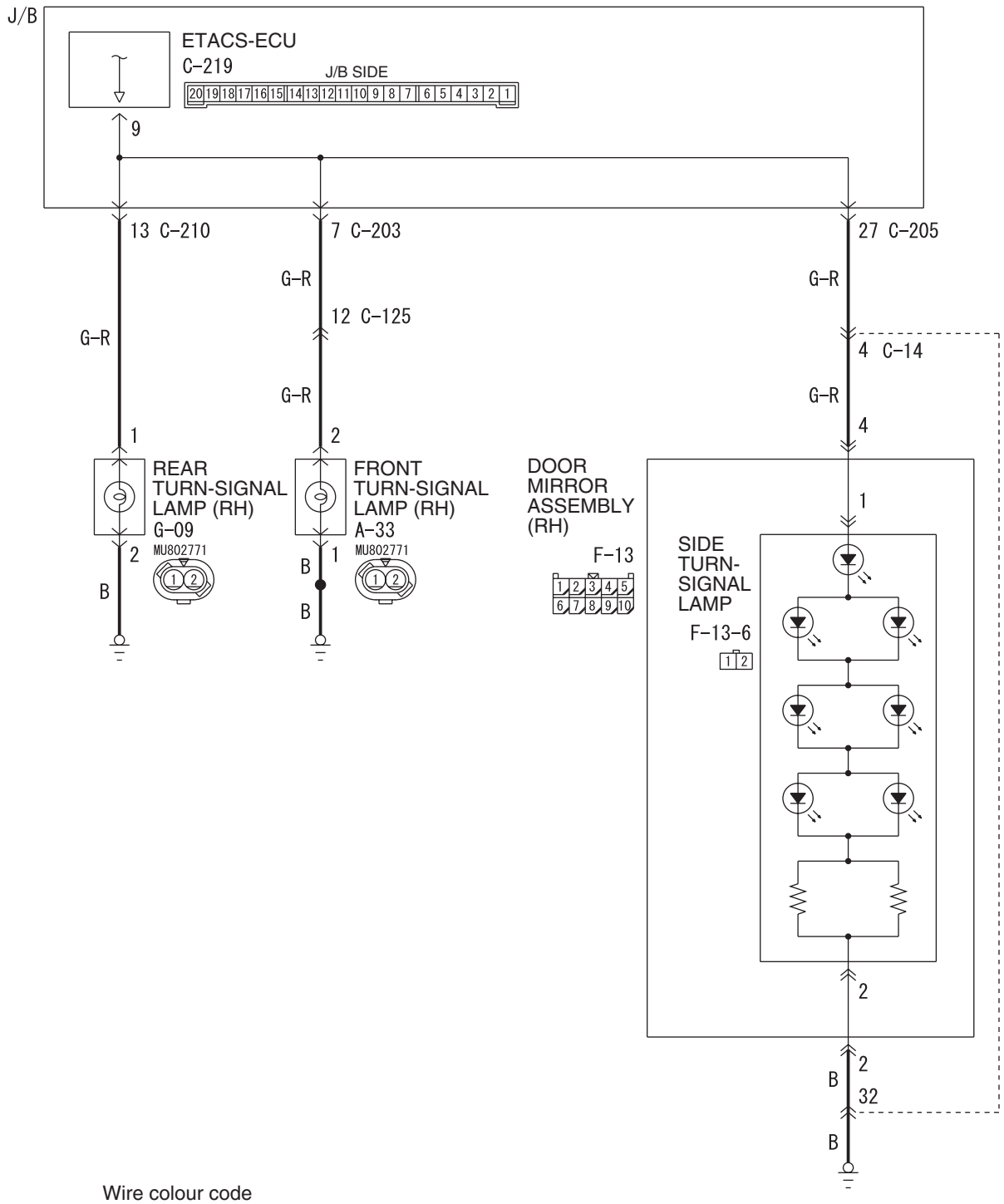

Wire colour code
B : Black LG : Light green G : Green L : Blue W : White Y : Yellow SB : Sky blue
BR : Brown O : Orange GR : Grey R : Red P : Pink V : Violet PU : Purple

W6X54X013A

Main Index
Group TOC

Right Turn-Signal Lamps Circuit <RHD>

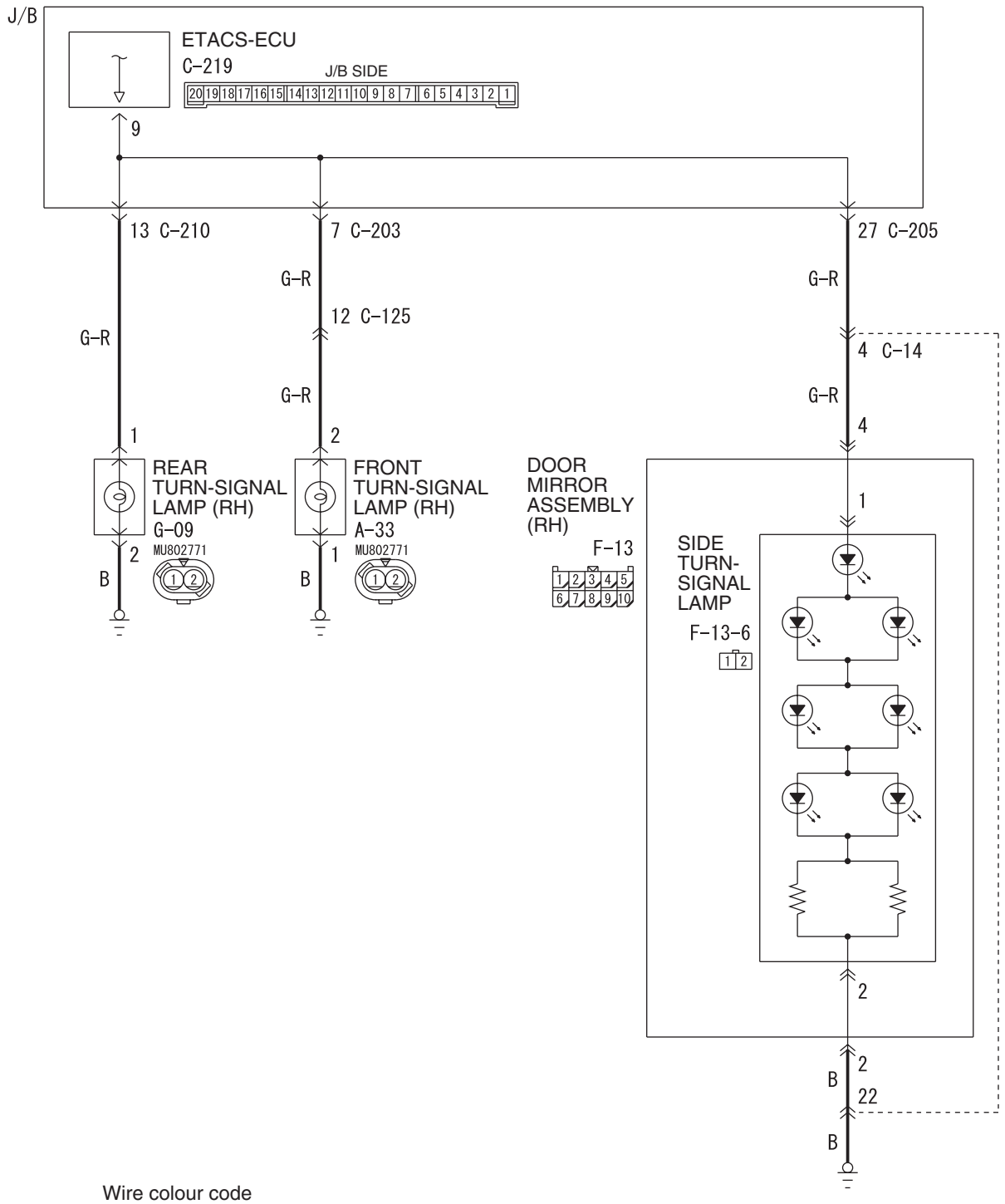

Wire colour code
B : Black LG : Light green G : Green L : Blue W : White Y : Yellow SB : Sky blue
BR : Brown O : Orange GR : Grey R : Red P : Pink V : Violet PU : Purple

W6X54X012A

COMMENTS ON TROUBLE SYMPTOM

If any of the turn-signal lamp does not illuminate normally, wiring harness connector(s) or the bulb may be defective.

POSSIBLE CAUSES

- Defective front turn-signal lamp bulb
- Defective side turn-signal lamp
- Defective rear turn-signal lamp bulb
- Damaged harness wires and connectors

Main Index
Group TOC

DIAGNOSIS PROCEDURE

Step 1. Confirm which turn-signal lamp is defective.

Q: Which turn-signal lamp fails to illuminate correctly?
Front turn-signal lamp : Go to Step 2.
Side turn-signal lamp : Go to Step 6.
Rear turn-signal lamp : Go to Step 11.

Step 2. Connector check: A-33 front turn-signal lamp (RH) or A-23 front turn-signal lamp (LH) connector.

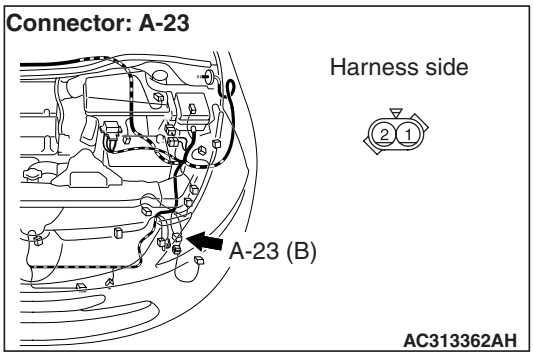

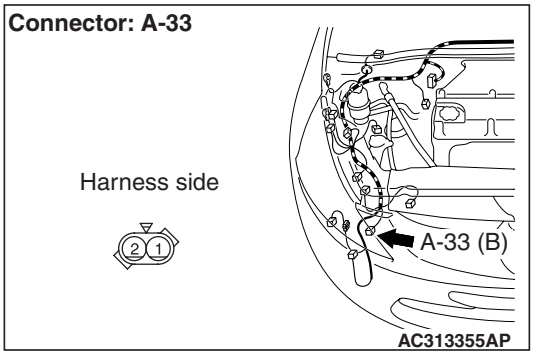

Q: Is the check result normal?
YES : Go to Step 3.
NO : Repair the defective connector.

Step 3. Check the bulb(s) of the turn-signal lamps.

Check the bulb(s) of the defective lamp.

Q: Is the check result normal?
YES : Go to Step 4.
NO : Replace the bulb(s) of the defective lamp.

Step 4. Resistance measurement at the A-33 front turn-signal lamp (RH) or A-23 front turn-signal lamp (LH) connector.

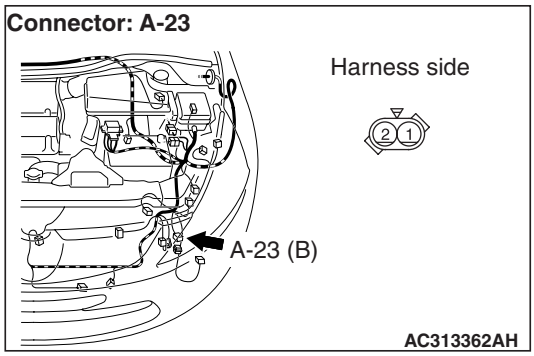

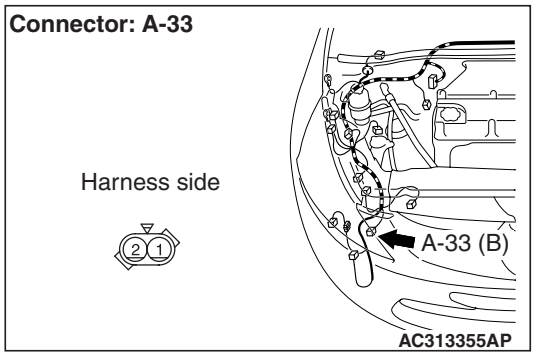

(1) Disconnect the connector, and measure at the wiring harness side.
(2) Measure the resistance between the defective lamp connector terminal and body earth.

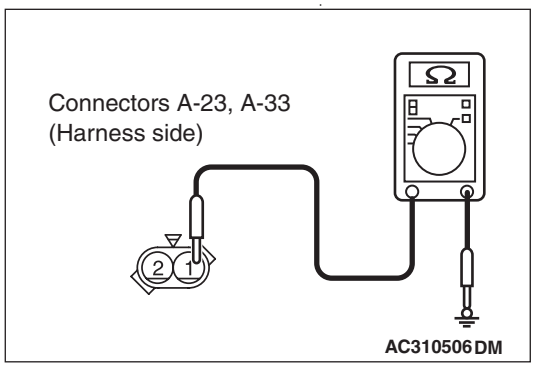

Resistance between A-33 front turn-signal lamp (RH) connector terminal No.1 and body earth
- Resistance between A-23 front turn-signal lamp (LH) connector terminal No.1 and body earth

OK: 2 Ω or less

Q: Is the check result normal?
YES : Go to Step 15.
NO : Go to Step 5.

Main Index
Group TOC

Step 5. Check the wiring harness from A-33 front turn-signal lamp (RH) connector terminal No.1and body earth or A-23 front turn-signal lamp (LH) connector terminal No.1 and body earth.

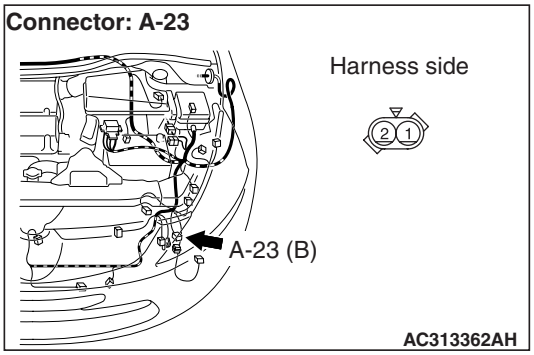

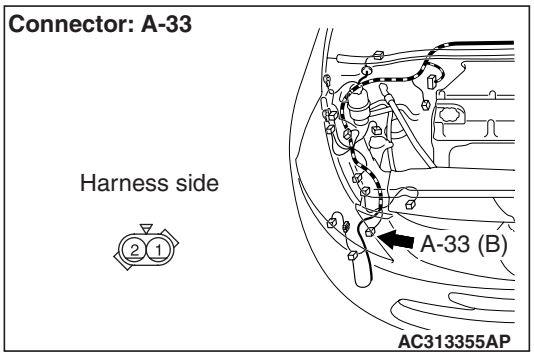

- Check the earth wires for open circuit.

Q: Is the check result normal?
YES : The trouble can be an intermittent malfunction (Refer to GROUP 00 – How to Cope with Intermittent Malfunction P.00-5).
NO : Repair the wiring harness.

Step 6. Connector check: F-13-6 side turn-signal lamp (RH) or F-07-6 side turn-signal lamp (LH) connector.

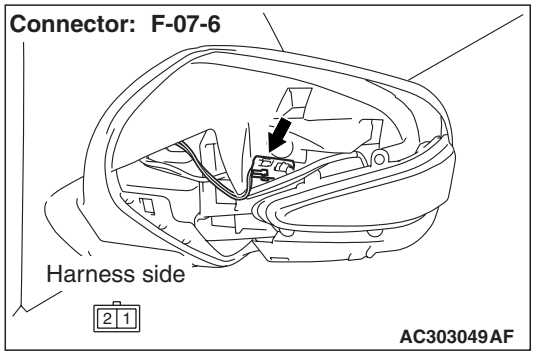

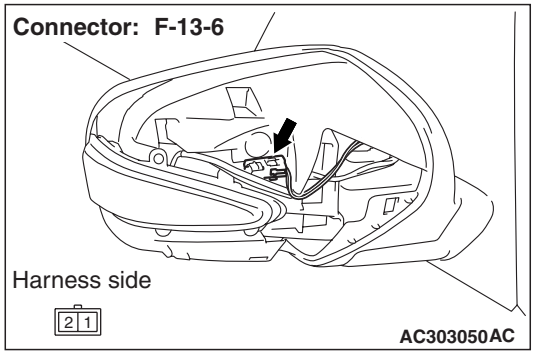

Q: Is the check result normal?
YES : Go to Step 7.
NO : Repair the defective connector.

Main Index
Group TOC

Step 7. Resistance measurement at the F-13-6 side turn-signal lamp (RH) or F-07-6 side turn-signal lamp (LH) connector.

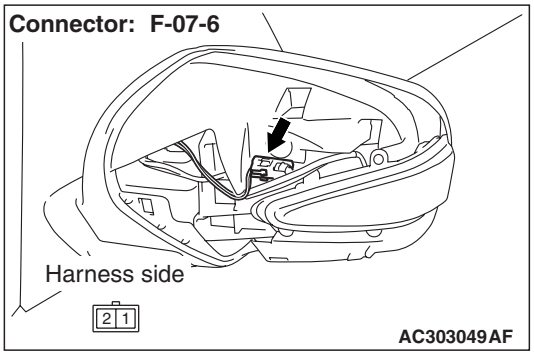

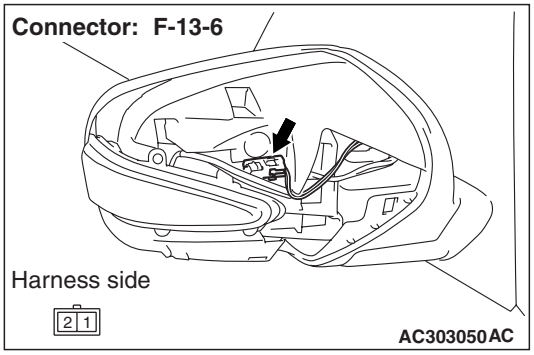

(1) Disconnect the connector, and measure at the wiring harness side.
(2) Measure the resistance between the defective lamp connector terminal and body earth.

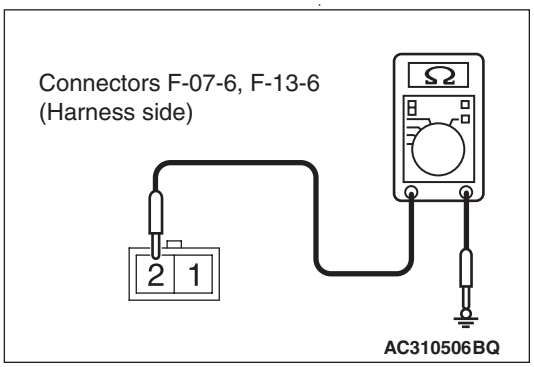

Resistance between F-13-6 side turn-signal lamp (RH) connector terminal No.2 and body earth

- Resistance between F-07-6 side turn-signal lamp (LH) connector terminal No.2 and body earth

OK: 2 Ω or less

Q: Is the check result normal?
YES : Go to Step 18.
NO : Go to Step 8.

Step 8. Connector check: F-13 door mirror assembly (RH) or F-07 door mirror assembly (LH) connector.

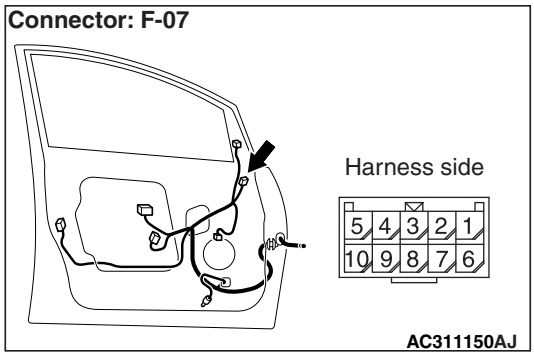

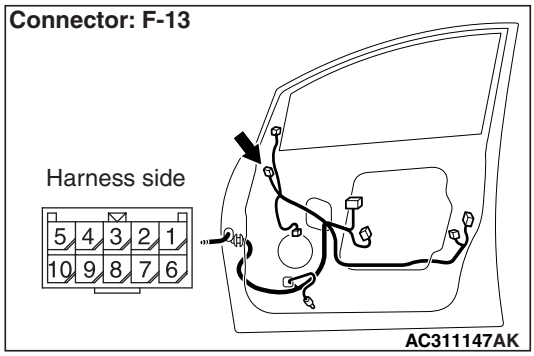

Q: Is the check result normal?
YES : Go to Step 9.
NO : Repair the defective connector.

Main Index
Group TOC

Step 9. Resistance measurement at the F-13 door mirror assembly (RH) or F-07 door mirror assembly (LH) connector.

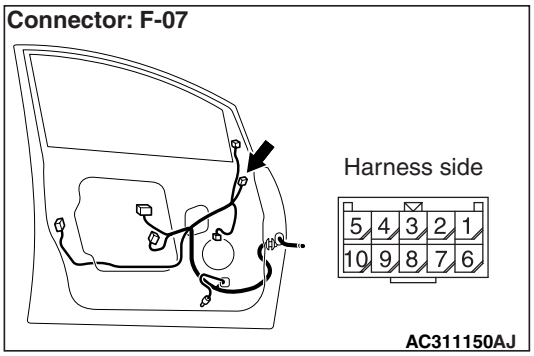

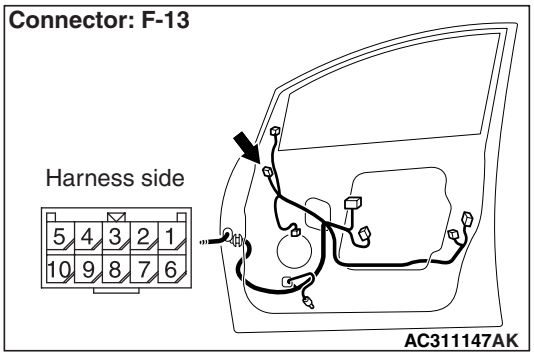

(1) Disconnect the connector, and measure at the wiring harness side.

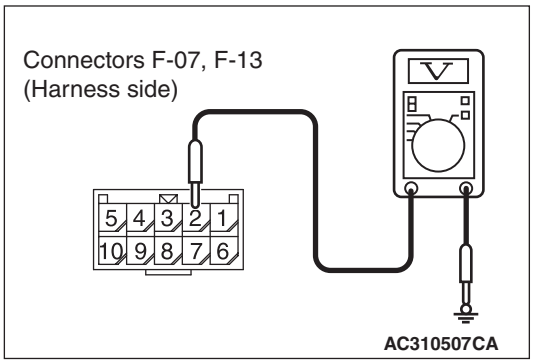

(2) Measure the resistance between the defective lamp connector terminal and body earth.
- Resistance between F-13 door mirror assembly (RH) connector terminal No.2 and body earth
- Resistance between F-07 door mirror assembly (LH) connector terminal No.2 and body earth

OK: 2 Ω or less

Q: Is the check result normal?

YES : Repair the wiring harness in the door mirror assembly.

NO : Go to Step 10.

Step 10. Check the wiring harness from F-13 door mirror assembly (RH) or F-07 door mirror assembly (LH) connector terminal No.2 and body earth.

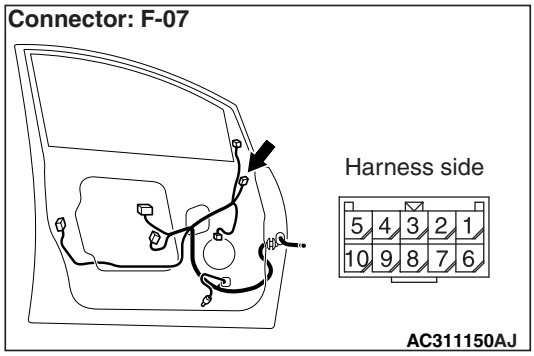

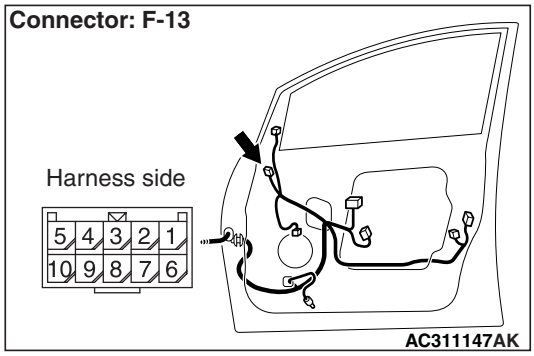

NOTE:

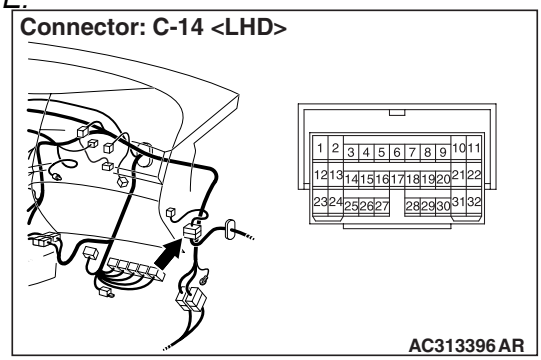

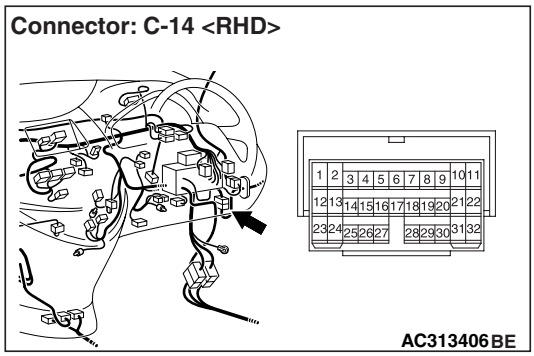

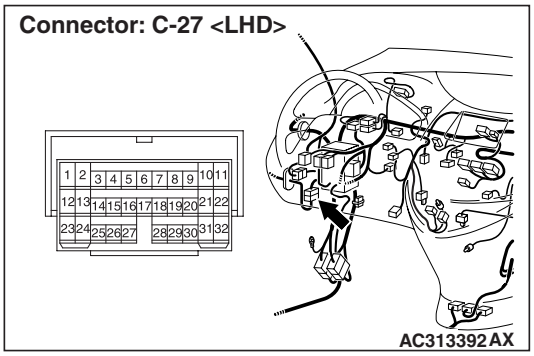

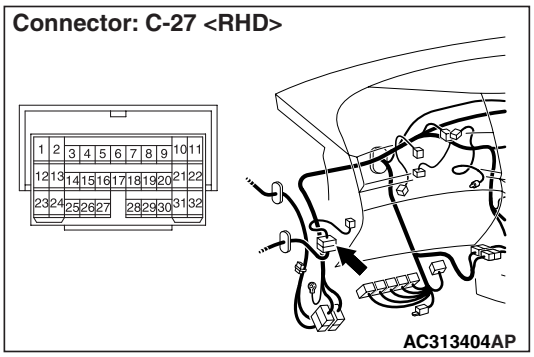

Prior to the wiring harness inspection, check intermediate connector C-14 <RH>, C-27 <LH>, and repair if necessary.

- Check the earth wires for open circuit.

Q: Is the check result normal?
YES : The trouble can be an intermittent malfunction (Refer to GROUP 00 – How to Cope with Intermittent Malfunction P.00-5).
NO : Repair the wiring harness.

Step 11. Connector check: G-09 rear turn-signal lamp (RH) or G-25 rear turn-signal lamp (LH) connector.

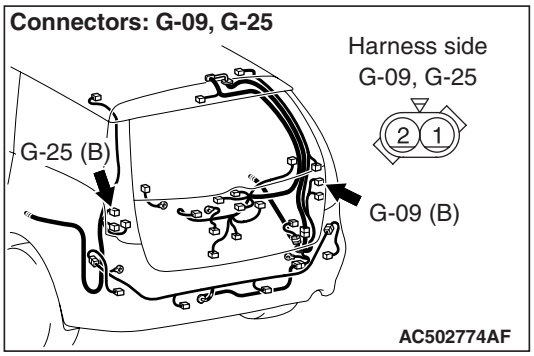

Q: Is the check result normal?
YES : Go to Step 12.
NO : Repair the defective connector.

Step 12. Check the bulb(s) of the turn-signal lamps.

Check the bulb(s) of the defective lamp.

Q: Is the check result normal?
YES : Go to Step 13.
NO : Replace the bulb(s) of the defective lamp.

Step 13. Resistance measurement at the G-09 rear turn-signal lamp (RH) or G-25 rear turn-signal lamp (LH) connector.

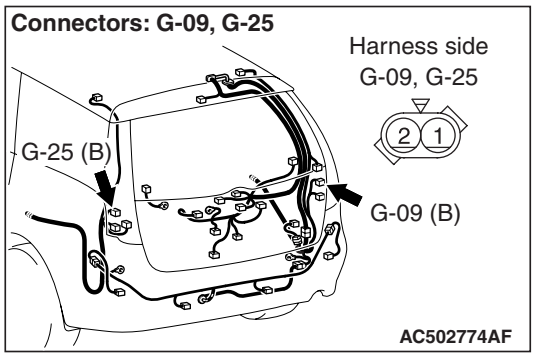

(1) Disconnect the connector, and measure at the wiring harness side.

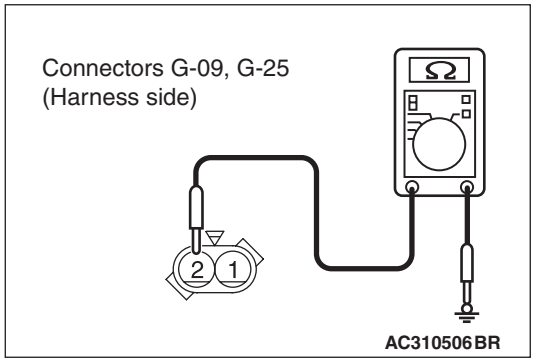

(2) Measure the resistance between the defective lamp connector terminal and body earth.
- Resistance between G-09 rear turn-signal lamp (RH) connector terminal No.2 and body earth
- Resistance between G-25 rear turn-signal lamp (LH) connector terminal No.2 and body earth

OK: 2 Ω or less

Q: Is the check result normal?
YES : Go to Step 22.
NO : Go to Step 14.

Main Index
Group TOC

Step 14. Check the wiring harness from G-09 rear turn-signal lamp (RH) or G-25 rear turn-signal lamp (LH) connector terminal No.2 and body earth.

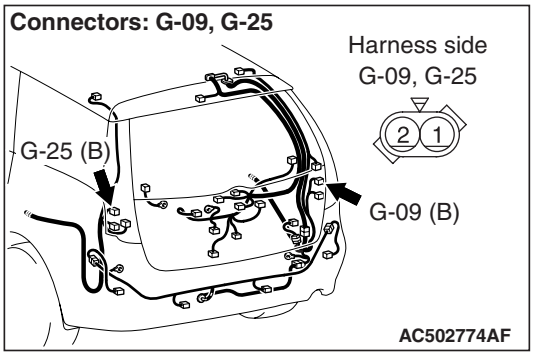

- Check the earth wires for open circuit.

Q: Is the check result normal?

YES : The trouble can be an intermittent malfunction (Refer to GROUP 00 – How to Cope with Intermittent Malfunction P.00-5).

NO : Repair the wiring harness.

Step 15. Connector check: C-219 ETACS-ECU connector

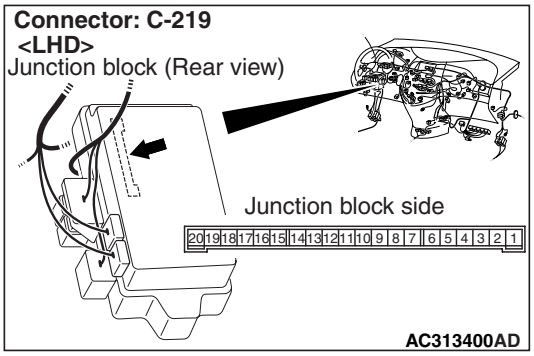

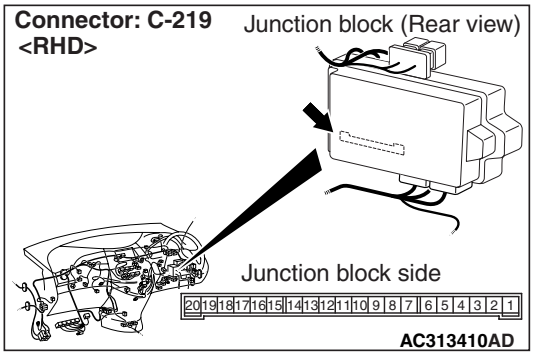

Q: Is the check result normal?

YES : Go to Step 16.

NO : Repair the defective connector.

Step 16. Check the wiring harness from the A-33 front turn-signal lamp (RH) connector terminal No.2 to C-219 ETACS-ECU connector terminal No.9 or A-23 front turn-signal lamp (LH) connector terminal No.2 to C-219 ETACS-ECU connector terminal No.14.

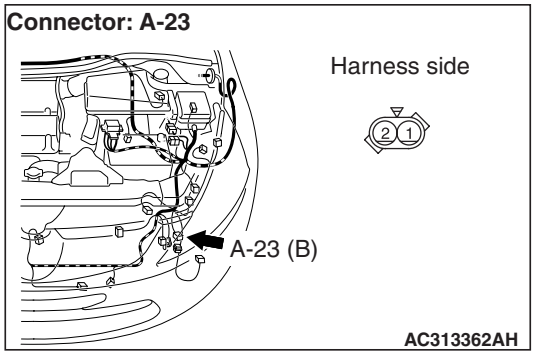

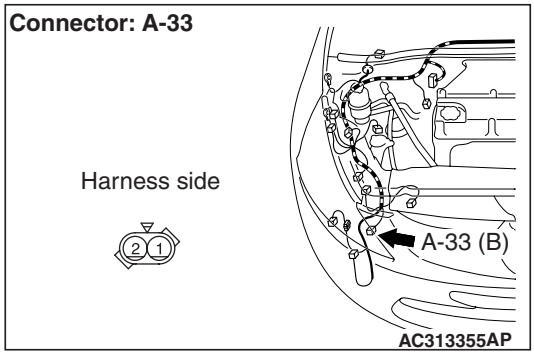

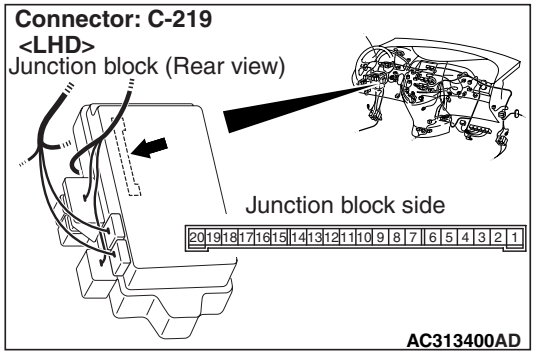

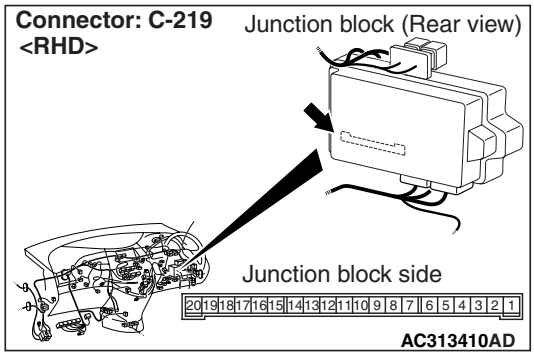

Main Index
Group TOC

NOTE:

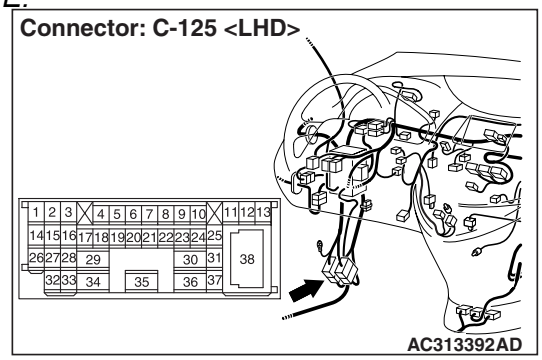

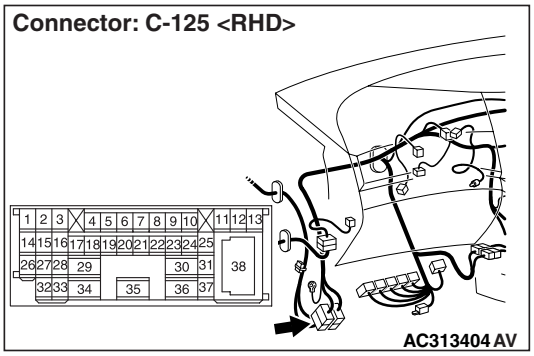

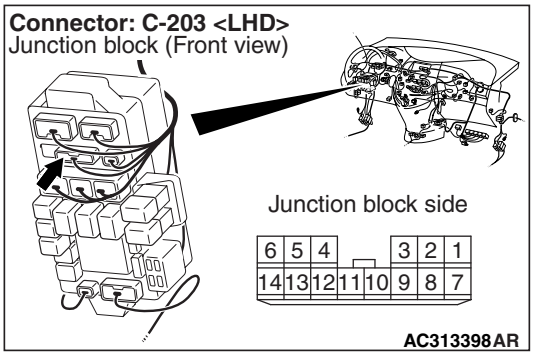

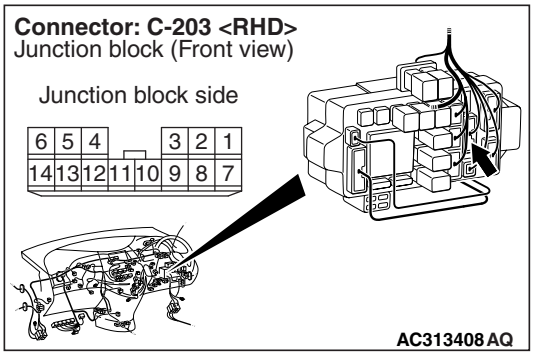

Prior to the wiring harness inspection, check intermediate connector C-125 and junction block connector C-203, and repair if necessary.

- Check the output lines for open circuit.

Q: Is the check result normal?

YES : Go to Step 17.

NO : Repair the wiring harness.

Step 17. Retest the system.

Check that the turn-signal lamps illuminate normally.

Q: Is the check result normal?

YES : The trouble can be an intermittent malfunction (Refer to GROUP 00 – How to Cope with Intermittent Malfunction P.00-5).

NO : Replace the headlamp assembly.

Step 18. Connector check: C-219 ETACS-ECU connector.

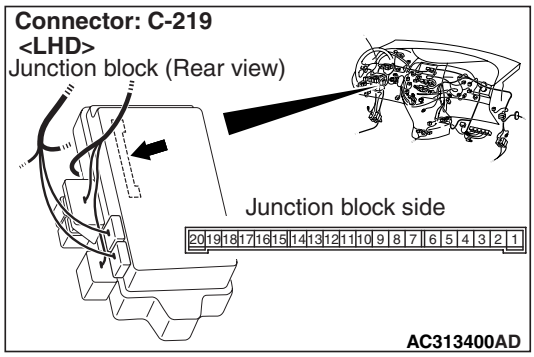

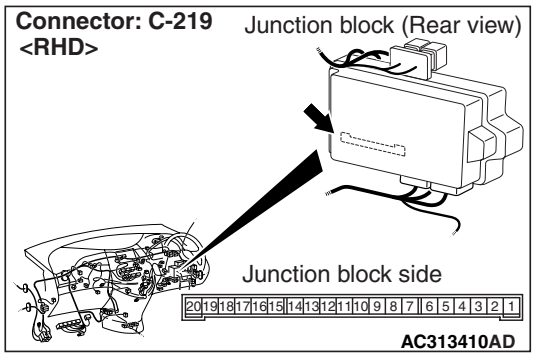

Q: Is the check result normal?

YES : Go to Step 19.

NO : Repair the defective connector.

Main Index
Group TOC

Step 19. Connector check: F-13 door mirror assembly (RH) or F-07 door mirror assembly (LH) connector.

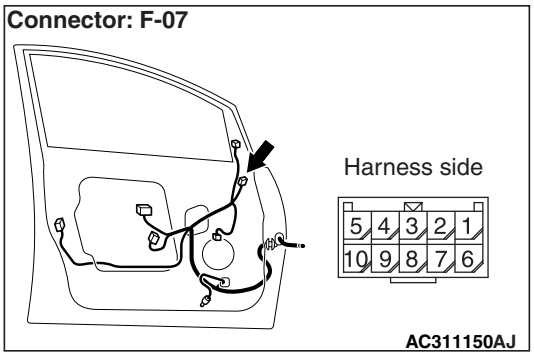

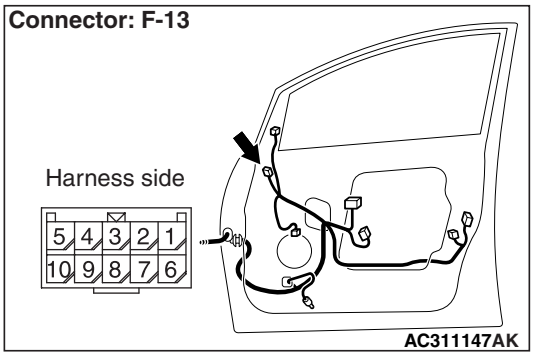

Q: Is the check result normal?
YES : Go to Step 20.
NO : Repair the defective connector.

Step 20. Check the wiring harness from the F-13-6 side turn-signal lamp (RH) connector terminal No.1 to C-219 ETACS-ECU connector terminal No.9 or F-07-6 side turn-signal lamp (LH) connector terminal No.1 to C-219 ETACS-ECU connector terminal No.14.

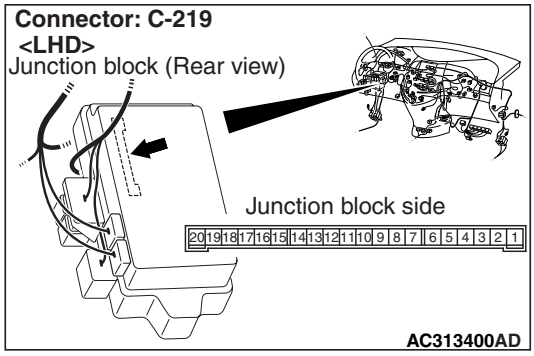

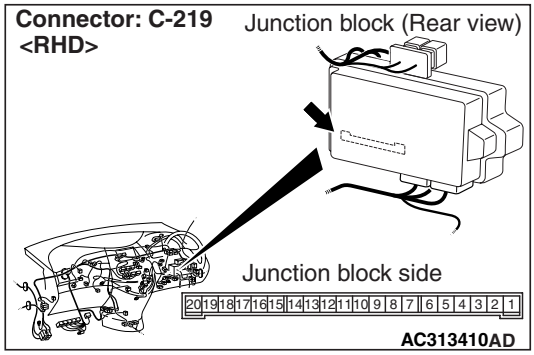

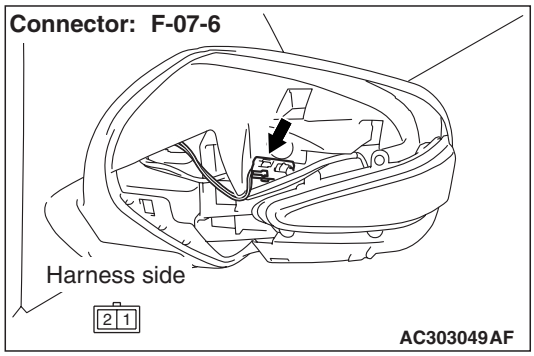

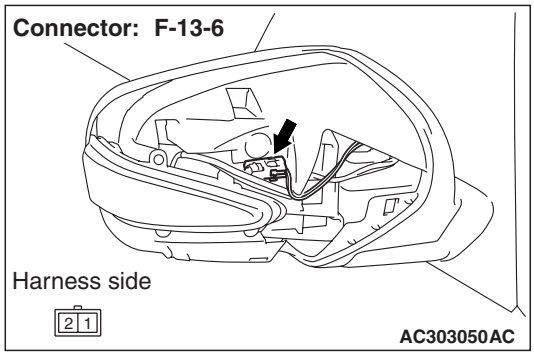

Main Index
Group TOC

NOTE:

Connector: C-14 <LHD>

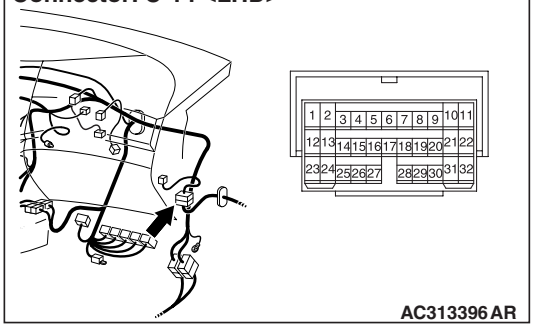

Connector: C-14 <RHD>

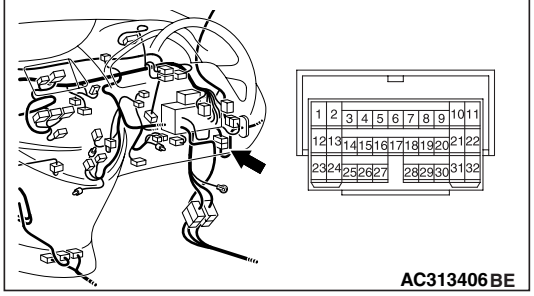

Connector: C-27 <LHD>

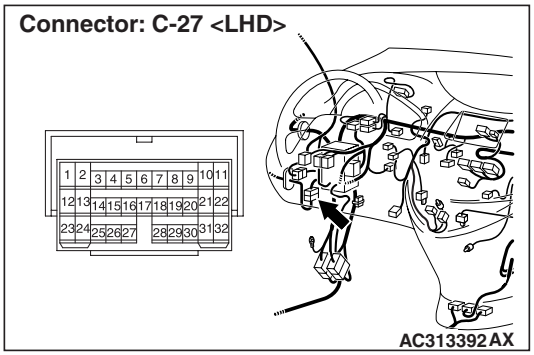

Connector: C-27 <RHD>

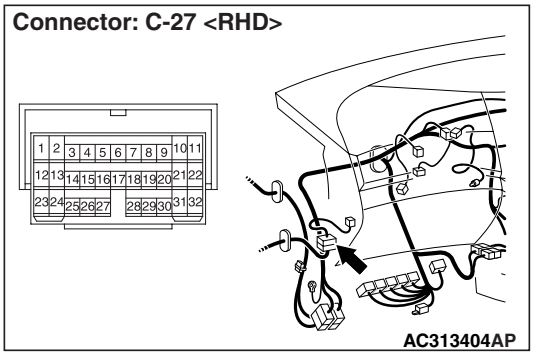

Connector: C-205 <LHD>
Junction block (Front view)

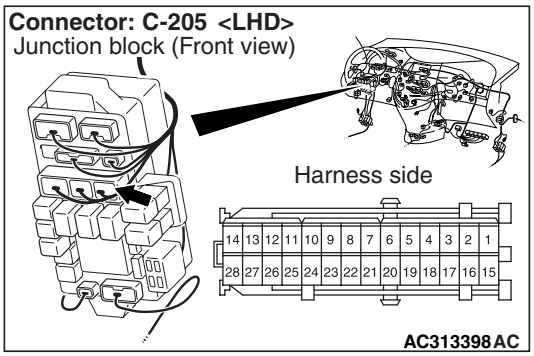

Connector: C-205 <RHD>
Junction block (Front view)

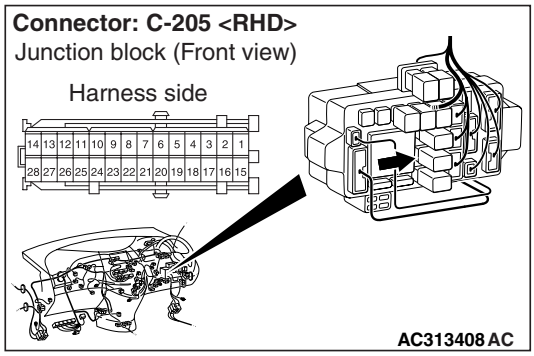

Prior to the wiring harness inspection, check intermediate connector C-14 <RH>, C-27 <LH> and junction block connector C-205, and repair if necessary.

- Check the output lines for open circuit.

Q: Is the check result normal?
YES : Go to Step 21.
NO : Repair the wiring harness.

Step 21. Retest the system.

Check that the side turn-signal lamps illuminate normally.

Q: Is the check result normal?
YES : The trouble can be an intermittent malfunction (Refer to GROUP 00 – How to Cope with Intermittent Malfunction P.00-5).
NO : Replace the side turn-signal lamp.

Main Index
Group TOC

Step 22. Connector check: C-219 ETACS-ECU connector.

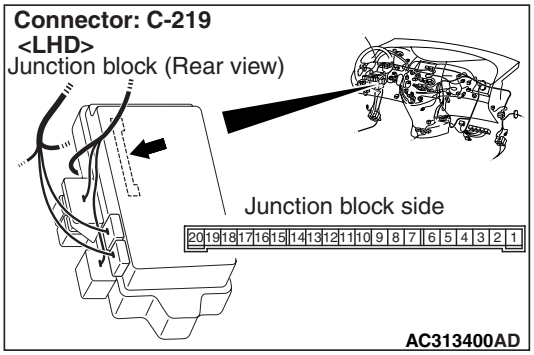

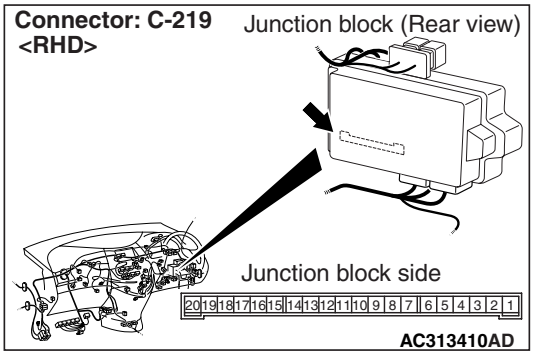

Q: Is the check result normal?

YES : Go to Step 23.

NO : Repair the defective connector.

Step 23. Check the wiring harness from the G-09 rear turn-signal lamp (RH) connector terminal No.1 to C-219 ETACS-ECU connector terminal No.9 or G-25 rear turn-signal lamp (LH) connector terminal No.1 to C-219 ETACS-ECU connector terminal or No.14.

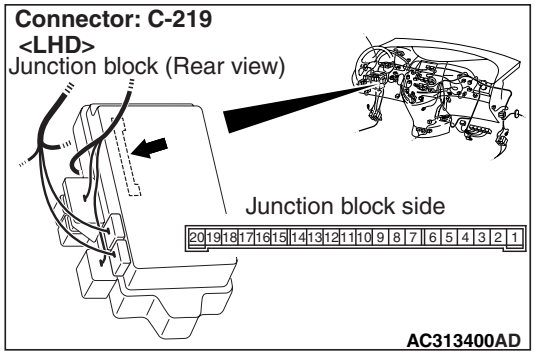

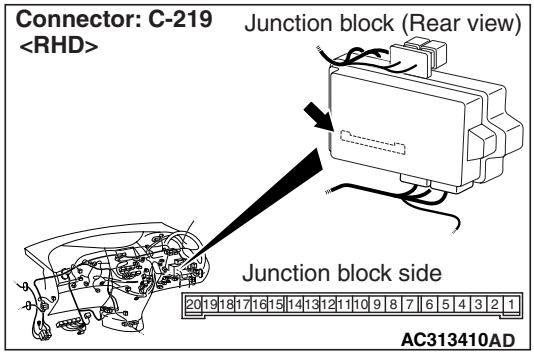

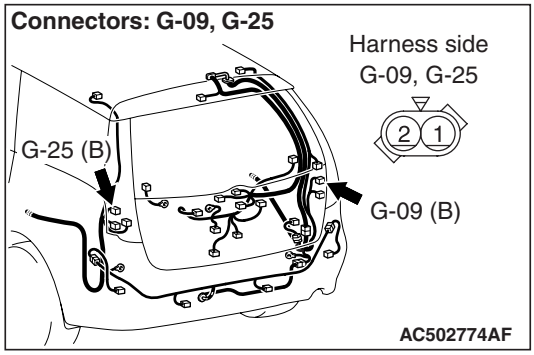

Main Index
Group TOC

NOTE:

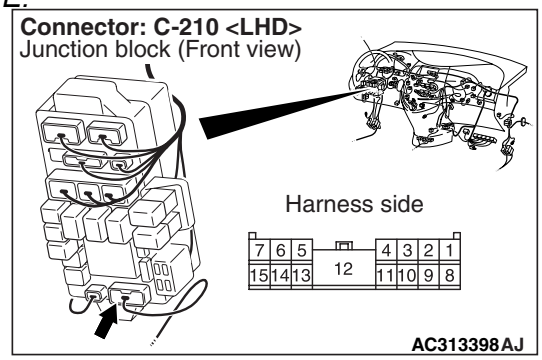

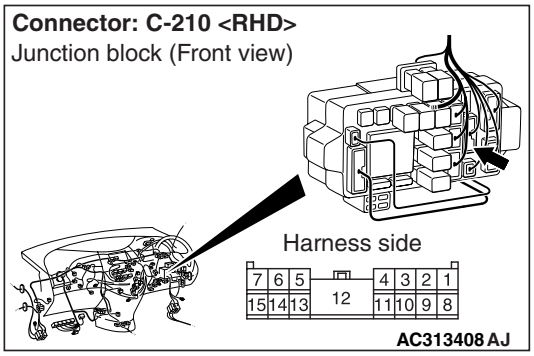

Prior to the wiring harness inspection, check junction block connector C-210, and repair if necessary.

- Check the output lines for open circuit.

Q: Is the check result normal?

YES : . Go to Step 24.

NO : . Repair the wiring harness.

Step 24. Retest the system.

Check that the turn-signal lamps.

Q: Is the check result normal?

YES : The trouble can be an intermittent malfunction (Refer to GROUP 00 – How to Cope with Intermittent Malfunction P.00-5).

NO : Replace the rear turn-signal lamp assembly.

INSPECTION PROCEDURE M-4: The turn-signal indicator lamp does not illuminate.

⚠ CAUTION

Whenever the ECU is replaced, ensure that the input and output signal circuits are normal.

Turn-Signal Indicator Lamp Circuit

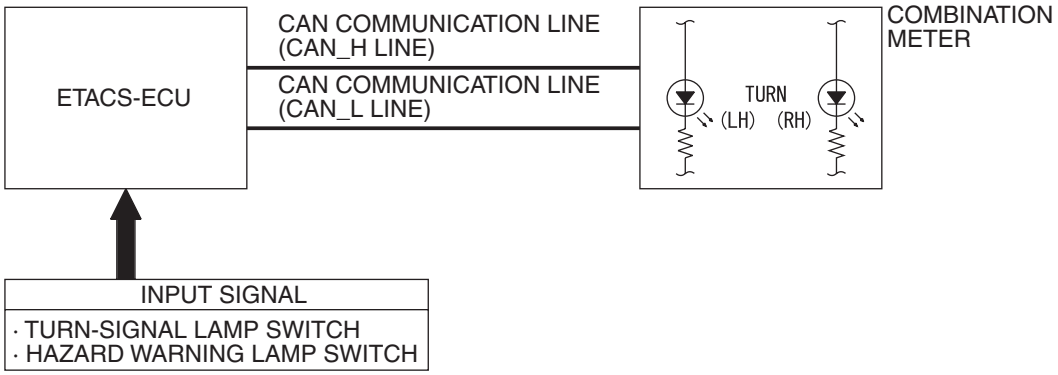

W4X54E190A

Main Index
Group TOC

COMMENTS ON TROUBLE SYMPTOM

If the turn-signal indicator lamp does not illuminate normally, connector(s), wiring harness in the CAN bus lines, the ETACS-ECU or the combination meter may be defective.

POSSIBLE CAUSES

- The combination meter may be defective
- The ETACS-ECU may be defective
- Damaged harness wires and connectors

DIAGNOSIS PROCEDURE

Step 1. Check that the hazard warning lamps operate.

Check that the hazard warning lamps illuminate normally.

Q: Is the check result normal?

YES : Go to Step 2.

NO : First, repair the headlamps. Refer to Inspection Procedure M-2 "The hazard warning lamps do not illuminate normally P.54C-245."

Step 2. M.U.T.-III CAN bus diagnostics.

Use the M.U.T.-III to diagnose the CAN bus lines.

Q: Is the check result normal?

YES : Go to Step 3.

NO : Repair the CAN bus line (Refer to GROUP 54F, Diagnosis P.54F-13).

Step 3. Check for combination meter diagnosis code.

Check whether the combination meter-related diagnosis code is set.

Q: Is the diagnosis code set?

YES : Diagnose the combination meter (Refer to GROUP 54A – Troubleshooting P.54A-55).

NO : Go to Step 4.

Step 4. M.U.T.-III actuator test

Perform the actuator test for the combination meter, and check that the trurn-signal indicator lamps illuminate (Refer to GROUP 54A – Combination Meter P.54A-95).

Q: Is the check result normal?

YES : Replace the ETACS-ECU.

NO : Replace the combination meter.

Main Index
Group TOC

FOG LAMP

INSPECTION PROCEDURE N-1: The front fog lamps do not illuminate normally.

⚠ CAUTION
Whenever the ECU is replaced, ensure that the input and output signal circuits are normal.

Front Fog Lamp Relay Circuit

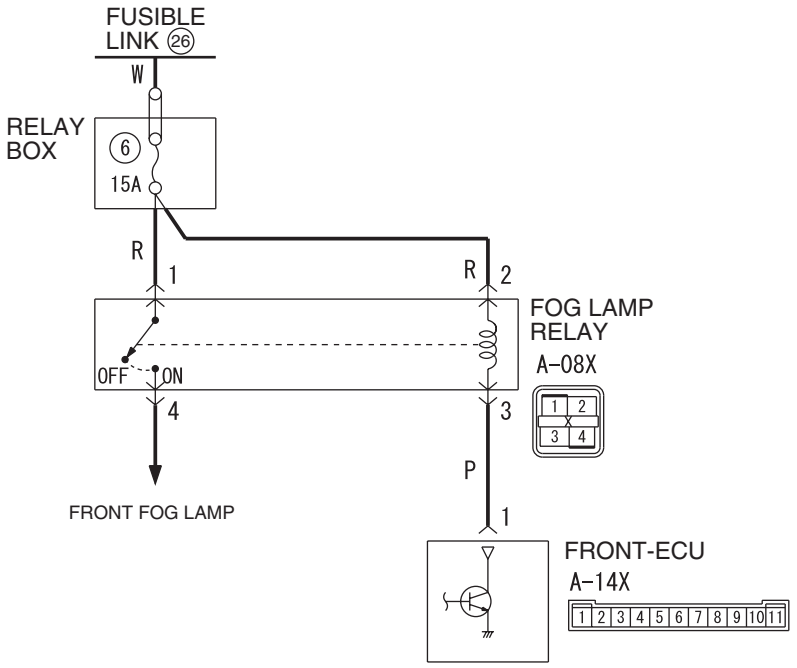

Wire colour code
B : Black LG : Light green G : Green L : Blue W : White Y : Yellow SB : Sky blue
BR : Brown O : Orange GR : Grey R : Red P : Pink V : Violet PU : Purple

W6X54X040A

OPERATION

The ETACS-ECU operates this function in accordance with the input signals below.

- Tail lamp switch
- Headlamp switch
- Front fog lamp switch

If the front fog lamps do not illuminate normally, these input signal circuit(s) or the ETACS-ECU may be defective.

POSSIBLE CAUSES

- Malfunction of the column switch
- Malfunction of the fog lamp switch
- Malfunction of the front-ECU
- Malfunction of the ETACS-ECU
- Damaged harness wires and connectors

DIAGNOSIS PROCEDURE

Step 1. Check that the tail/stop lamps and headlamps operate.

Check that the tail/stop lamps and headlamps illuminate normally.

Q: Is the check result normal?

YES : Go to Step 2.

NO : Repair the tail/stop lamp(s) and headlamp(s). Refer to trouble symptom chart P.54C-32.

Main Index
Group TOC

Step 2. ECU check by using the SWS monitor

Check that the power supply and earth lines to the column switch (column-ECU), the ETACS-ECU and the front-ECU and the SWS communication lines are normal.

- Ignition switch: OFF

ECUS TO BE CHECKED

- COLUMN ECU
- ETACS ECU
- FRONT ECU

OK: "OK" are displayed for all the items

Q: Are the check result normal?

"OK" are displayed for all the items : Go to Step 3.

"NG" is displayed on the "COLUMN ECU" menu. : Refer to Inspection Procedure A-2 "Communication with column switch (column-ECU) is not possible P.54C-45."

"NG" is displayed on the "ETACS ECU" menu. : Refer to Inspection Procedure A-3 "Communication with ETACS-ECU is not possible P.54C-51."

"NG" is displayed on the "FRONT ECU" menu. : Refer to Inspection Procedure A-4 "Communication with front-ECU is not possible P.54C-58."

Step 3. Function diagnosis by using the SWS monitor

Check the SWS communication signal, which are related to the front fog lamps.

<Selected item> LIGHTING - F.FOG LAMP

- Ignition switch: ON
- Lighting switch: "TAIL" or "HEAD"
- Front fog lamp switch: ON

Item No.	Item name	Normal condition
Item 00	HEADLAMP SW	ON when the lighting switch is at HEAD
Item 01	TAIL LAMP SW	ON when the lighting switch is at TAIL or HEAD
Item 30	IG SW(IG1)	ON
Item 36	F.FOG LAMP	ON
Item 70	FRONT ECU ACK	NORMAL ACK or HI-BEAM ACK

OK: Normal conditions are displayed for all the items.

Q: Are the check result normal?

Normal conditions are displayed for all the items. : Go to Step 4.

Normal condition is not displayed for item 00 or 01. : Refer to inspection procedure P-6 "The column switch (lighting and turn-signal lamp switch) signal is not received P.54C-350."

Normal condition is not displayed for item No.30. : Refer to inspection procedure P-2 "The ignition switch (IG1) signal is not received P.54C-335."

Normal condition is not displayed for item No.36. : Refer to inspection procedure P-4 "The front fog lamp switch signal is not received P.54C-342."

Normal condition is not displayed for item No.70. : Replace the front-ECU.

Step 4. Connector check: A-08X front fog lamp relay connector

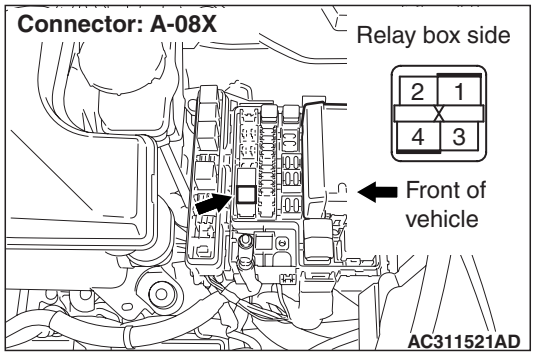

Q: Is the check result normal?

YES : Go to Step 5.

NO : Repair the defective connector.

Step 5. Check the front fog lamp relay.

Refer to GROUP 54A – Front fog lamp P.54A-149.

Q: Is the check result normal?

YES : Go to Step 6.

NO : Replace the front fog lamp relay.

Main Index
Group TOC

Step 6. Voltage measurement at the A-08X front fog lamp relay connector.

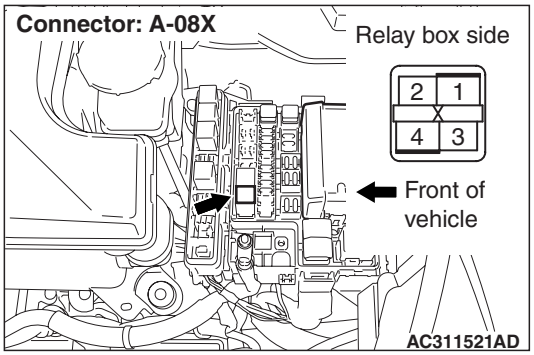

(1) Remove the front fog lamp relay, and measure at the relay box side.

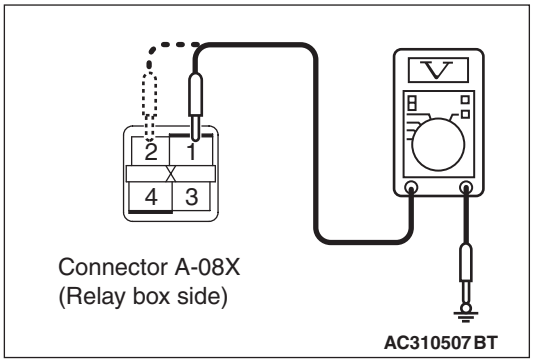

(2) Check the voltage between the front fog lamp relay connector and body earth.
- Voltage between A-08X front fog lamp relay connector terminal No.1 and body earth
- Voltage between A-08X front fog lamp relay connector terminal No.2 and body earth

OK: System voltage

Q: Is the check result normal?
YES : Go to Step 8.
NO : Go to Step 7.

Step 7. Check the wiring harness between A-08X front fog lamp relay connector (terminal Nos. 1and 2) and the fusible link (26).

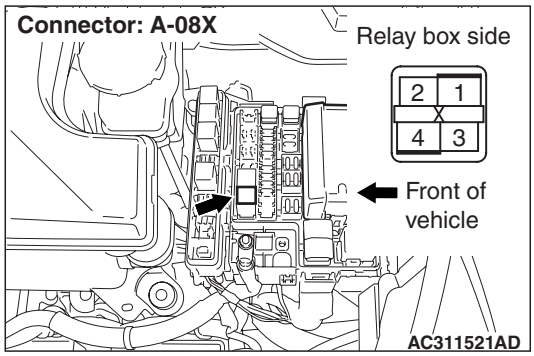

- Check the power supply line for open circuit.

Q: Is the check result normal?
YES : The trouble can be an intermittent malfunction (Refer to GROUP 00 – How to Cope with Intermittent Malfunction P.00-5).
NO : Repair the wiring harness.

Step 8. Connector check: A-14X front-ECU connector

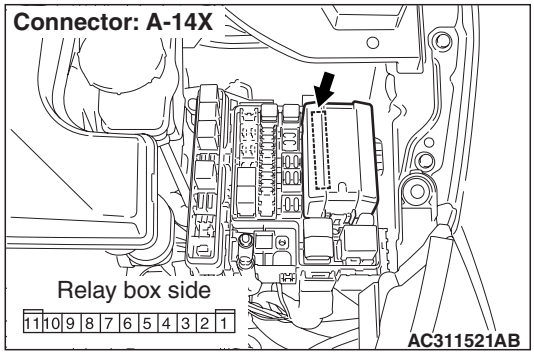

Q: Is the check result normal?
YES : Go to Step 9.
NO : Repair the defective connector.

Main Index
Group TOC

Step 9. Check the wiring harness between A-08X front fog lamp relay connector terminal No.3 and A-14X front-ECU connector terminal No.1.

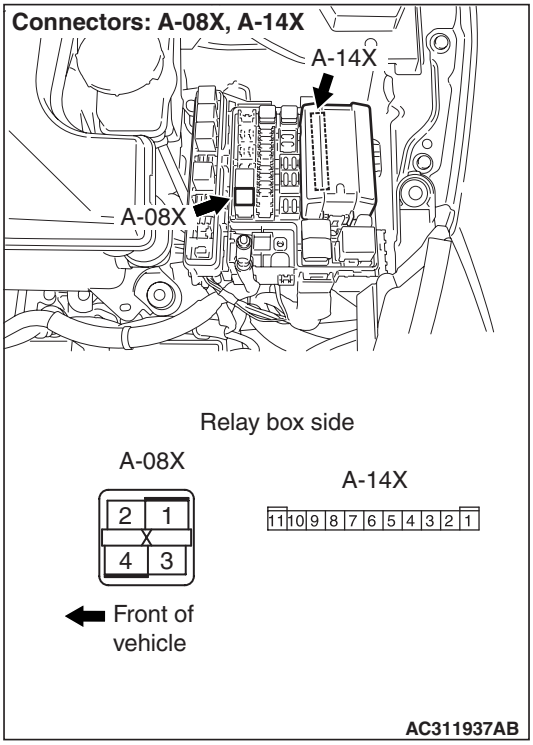

- Check the output lines for open circuit.

Q: Is the check result normal?
YES : . Go to Step 10.
NO : . Repair the wiring harness.

Step 10. Retest the system.
Check that the front fog lamps illuminate normally.

Q: Is the check result normal?
YES : The trouble can be an intermittent malfunction (Refer to GROUP 00 – How to Cope with Intermittent Malfunction P.00-5).
NO : Replace the ETACS-ECU.

Main Index
Group TOC

INSPECTION PROCEDURE N-2: Any of the front fog lamps does not illuminate.

⚠ CAUTION
Whenever the ECU is replaced, ensure that the input and output signal circuits are normal.

Front Fog Lamps Circuit

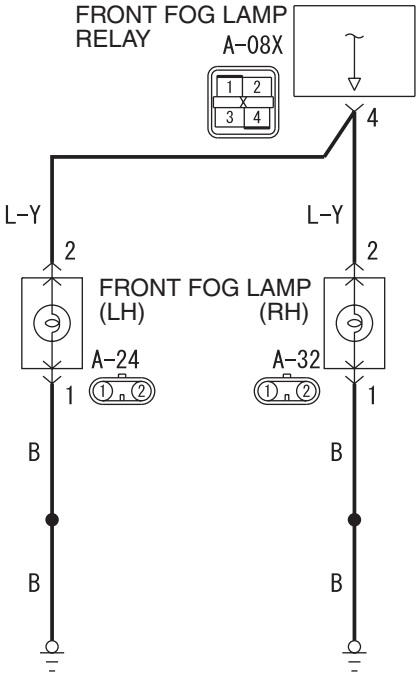

Wire colour code
B : Black LG : Light green G : Green L : Blue W : White Y : Yellow SB : Sky blue
BR : Brown O : Orange GR : Grey R : Red P : Pink V : Violet PU : Purple

W6X54X041A

COMMENTS ON TROUBLE SYMPTOM

If any of the front fog lamps do not illuminate, the wiring harness connector(s), the bulb or the fuse may be defective or burned out.

POSSIBLE CAUSES

- Burned-out front fog lamp bulb
- Damaged harness wires and connectors

Main Index
Group TOC

DIAGNOSIS PROCEDURE

Step 1. Connector check: A-32 front fog lamp (RH) connector or A-24 front fog lamp (LH) connector

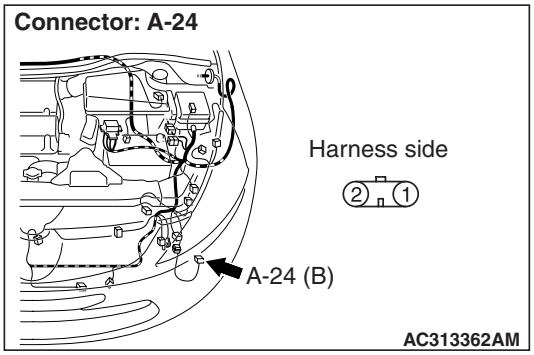

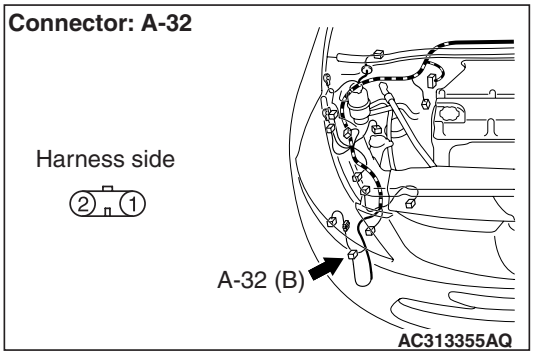

Q: Is the check result normal?
YES : Go to Step 2.
NO : Repair the defective connector.

Step 2. Check the bulbs of the front fog lamps.
Check the bulb(s) of the defective lamp.

Q: Is the check result normal?
YES : Go to Step 3.
NO : Replace the bulb(s) of the defective lamp.

Step 3. Resistance measurement at A-32 front fog lamp (RH) connector or A-24 front fog lamp (LH) connector.

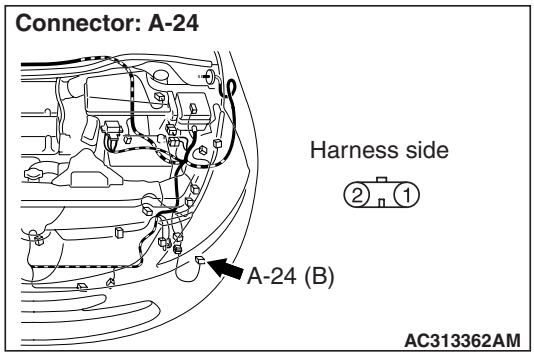

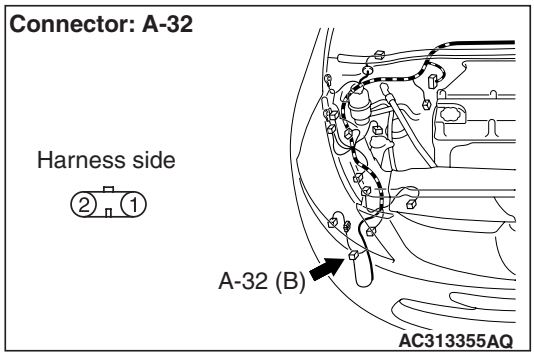

(1) Disconnect the connector, and measure at the wiring harness side.

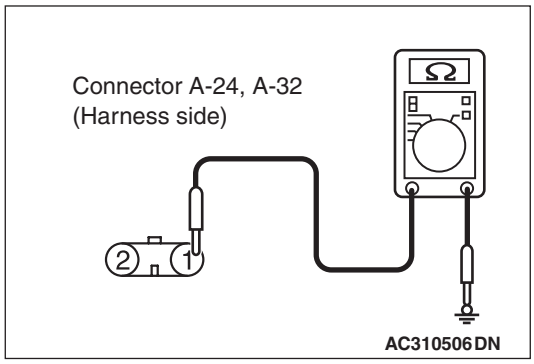

(2) Check the resistance between the lamp connector and body earth.
- Resistance between A-32 front fog lamp (RH) connector terminal No.1 and body earth
- Resistance between A-24 front fog lamp (LH) connector terminal No.1 and body earth

OK: 2 Ω or less

Q: Is the check result normal?
YES : Go to Step 5.
NO : Go to Step 4.

Step 4. Check the wiring harness from A-32 front fog lamp (RH) connector or A-24 front fog lamp (LH) connector terminal No.1 to body earth.

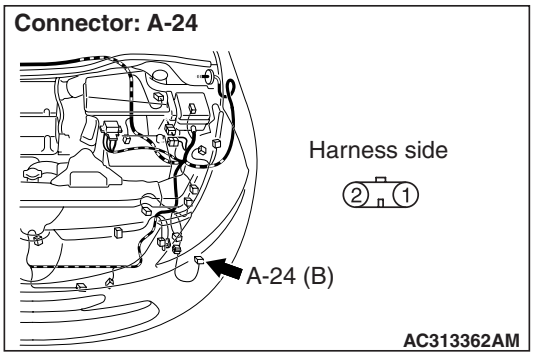

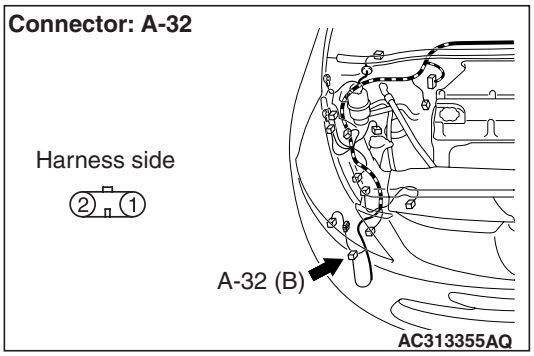

- Check the earth wires for open circuit.

Q: Is the check result normal?
YES : The trouble can be an intermittent malfunction (Refer to GROUP 00 – How to Cope with Intermittent Malfunction P.00-5).
NO : Repair the wiring harness.

Step 5. Connector check: A-08X front fog lamp relay connector

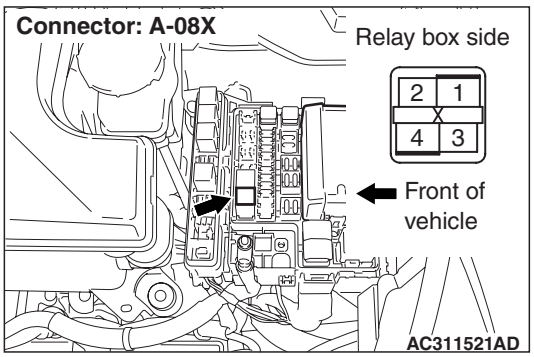

Q: Is the check result normal?
YES : Go to Step 6.
NO : Repair the defective connector.

Step 6. Check the wiring harness from A-32 front fog lamp (RH) connector or A-24 fog lamp (LH) connector terminal No.2 to A-08X front fog lamp relay connector terminal No.4.

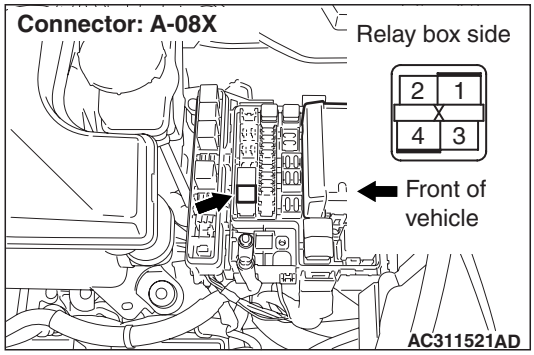

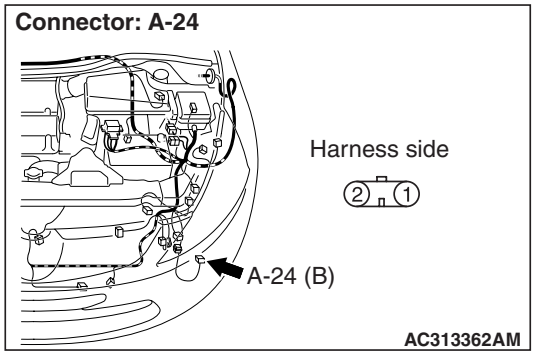

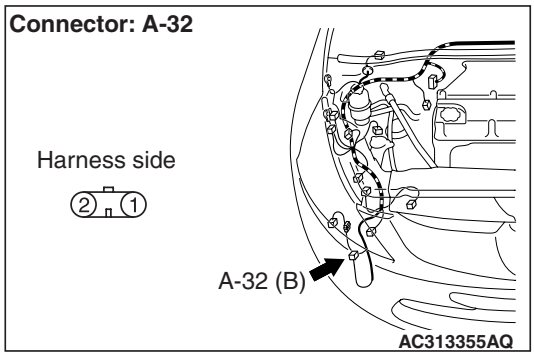

- Check the power supply line for open circuit.

Q: Is the check result normal?
YES : Go to Step 7.
NO : Repair the wiring harness.

Step 7. Retest the system.
Check that the front fog lamp illuminate normally.

Q: Is the check result normal?
YES : The trouble can be an intermittent malfunction (Refer to GROUP 00 – How to Cope with Intermittent Malfunction P.00-5).
NO : Replace the front fog lamp(s).

Main Index
Group TOC

INSPECTION PROCEDURE N-3: The front fog lamp indicator does not illuminate normally.

⚠ CAUTION
Whenever the ECU is replaced, ensure that the input and output signal circuits are normal.

Front Fog Lamp Indicator Lamp Circuit

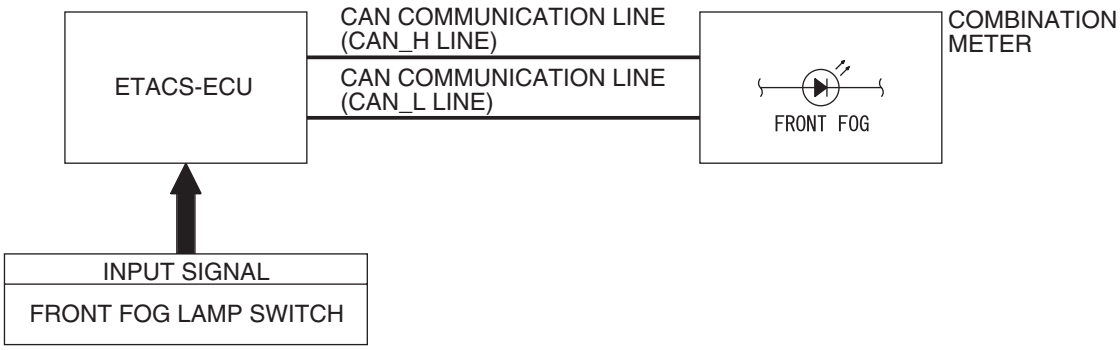

W4X54X174A

COMMENTS ON TROUBLE SYMPTOM

If the front fog lamp indicator does not illuminate normally, connector(s), wiring harness in the CAN bus lines, the ETACS-ECU or the combination meter may be defective.

POSSIBLE CAUSES

- The combination meter may be defective
- The ETACS-ECU may be defective
- Damaged harness wires and connectors

DIAGNOSIS PROCEDURE

Step 1. Check the front fog lamps.
When the front fog lamp switch is operated, check that the front fog lamps illuminate/go off normally.

Q: Is the check result normal?
YES : Go to Step 2.
NO : Refer to Inspection Procedure N-2 "Any of the front fog lamps does not illuminate P.54C-267."

Step 2. M.U.T.-III CAN bus diagnostics.
Use the M.U.T.-III to diagnose the CAN bus lines.

Q: Is the check result normal?
YES : Go to Step 3.
NO : Repair the CAN bus line (Refer to GROUP 54F, Diagnosis P.54F-13).

Step 3. Check for combination meter diagnosis code.
Check whether the combination meter-related diagnosis code is set.

Q: Is the diagnosis code set?
YES : Diagnose the combination meter (Refer to GROUP 54A – Troubleshooting P.54A-55).
NO : Go to Step 4.

Step 4. M.U.T.-III actuator test
Perform the actuator test for the combination meter, and check that the front fog lamp indicator illuminates (Refer to GROUP 54A – Combination Meter P.54A-95).

Q: Is the check result normal?
YES : Replace the ETACS-ECU.
NO : Replace the combination meter.

Main Index
Group TOC

INTERIOR LAMP

Inspection Procedure O-1: The interior lamps (room ramp, rear personal lamps, door lamps, luggage compartment lamp, key illumination lamp) does not illuminate or extinguish normally.

⚠ CAUTION

Whenever the ECU is replaced, ensure that the input and output signal circuits are normal.

Interior Lamp Circuit <without keyless entry system>

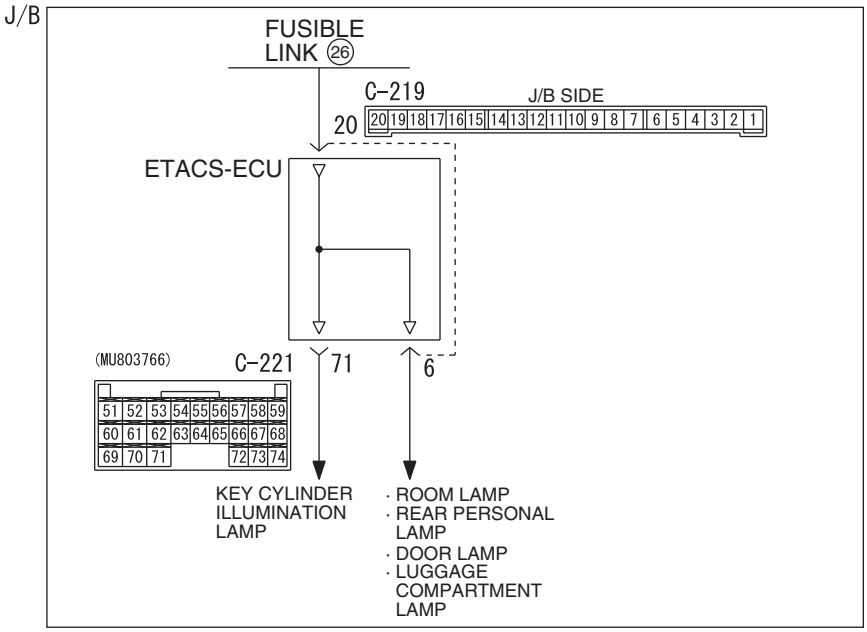

W4X54E211A

Main Index
Group TOC

Interior Lamp Circuit <with keyless entry system>

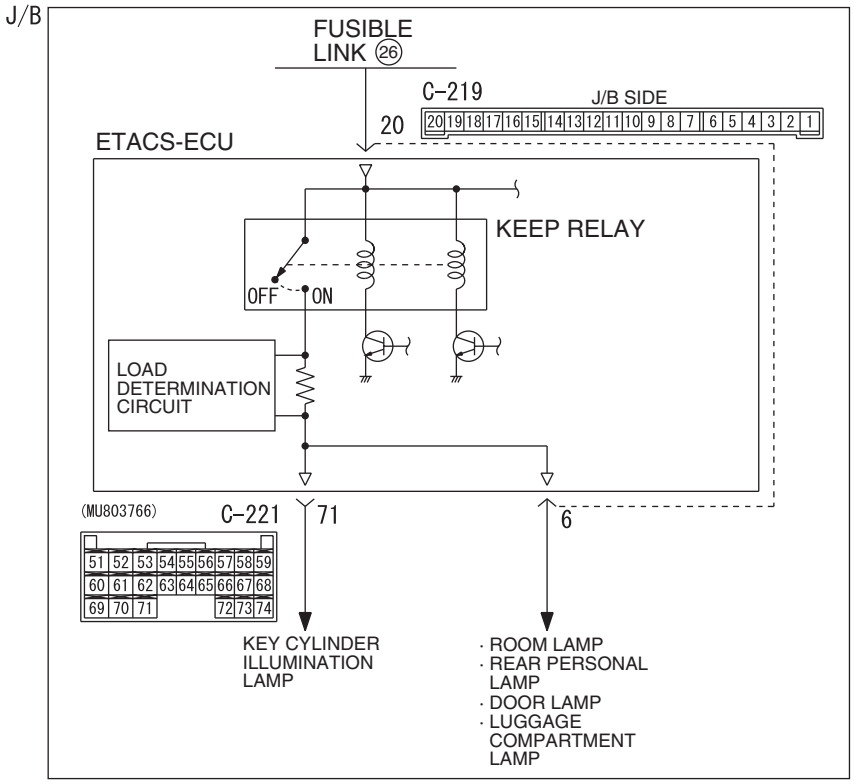

W4X54E210A

COMMENTS ON TROUBLE SYMPTOM

The ETACS-ECU operates the interior lamps (room lamp, rear personal lamp. luggage compartment lamp, door lamp, key cylinder illumination lamp) in accordance with the input signals below.

- Ignition switch (IG1)
- Door switches
- Tailgate switch
- Door key switch
- Tailgate key switch
- Driver's door lock actuator
- Interior lamp switch
- Multi-purpose fuse No.18
- Key reminder switch <vehicles with keyless entry system>
- Interior lamp loaded signal <vehicles with keyless entry system>

If this function does not work normally, these input signal circuit(s) or the ETACS-ECU may be defective. Alternatively, the room lamp delay off time has been set to 0 second by using the customisation function.

POSSIBLE CAUSES

- Malfunction of the door switches
- Malfunction of the room lamp switches
- Malfunction of the driver's door lock actuator
- Malfunction of the ETACS-ECU
- Malfunction of the key reminder switch
- Damaged harness wires and connectors

DIAGNOSTIC PROCEDURE

Step 1. Customize function by using the SWS monitor

Use the SWS monitor customisation function to confirm that "Room lamp delay timer" is set to other than "Without function" (one of the settings below).

- 30sec.
- 15sec.
- 7.5sec.

Q: Is the check result normal?

YES : Go to Step 2.

NO : Use the SWS monitor customisation function to confirm that "Room lamp delay timer" is set to other than "Without function" (Refer to P.54C-432).

Main Index
Group TOC

Step 2. Check the illumination of the interior lamps.

Check that the interior lamps illuminate and extinguish.

NOTE: Check that the interior lamps illuminate or extinguish when the interior lamp switches are operated. For the room lamp and the rear personal lamps, check they illuminate when the lamp switches are turned to the ON or DOOR position.

Q: Which of the interior lamp does no illuminate or extinguish?

All of the interior lamps illuminate and extinguish normally. : The procedure is complete.

No lamps illuminate at all. : Go to Step 3.

When the interior lamp switches are turned to the ON position, no lamps illuminate at all. Alternatively, when the interior lamp switches are turned to the OFF position, all the interior lamps illuminate. : Repair the interior lamps which do not turn on (Refer to trouble symptom chart P.54C-32).

If the interior lamp switches are turned to the ON position, none of the room lamp and the rear personal lamps illuminate at all. : Repair the interior lamps which do not turn on (Refer to trouble symptom chart P.54C-32).

The room lamp and the rear personal lamps do not illuminate or extinguish normally when the switches are at the DOOR position. : Repair the interior lamps which do not turn on (Refer to trouble symptom chart P.54C-32).

Only the room lamp does not illuminate or extinguish normally. : Repair the interior lamps which do not turn on (Refer to trouble symptom chart P.54C-32).

Only right or left rear personal lamp does not illuminate or extinguish normally. : Repair the interior lamps which do not turn on (Refer to trouble symptom chart P.54C-32).

Only the luggage compartment lamp does not illuminate or extinguish normally. : Repair the interior lamps which do not turn on (Refer to trouble symptom chart P.54C-32).

Only the door lamps do not illuminate or extinguish normally. : Repair the interior lamps which do not turn on (Refer to trouble symptom chart P.54C-32).

Only the key cylinder illumination lamp does not illuminate or extinguish normally. : Refer to Inspection Procedure J-1 "The ignition key cylinder illumination lamp does not illuminate/extinguish normally P.54C-209."

Step 3. ECU check by using the SWS monitor

Check that the power supply and earth lines to the ETACS-ECU and the SWS communication lines are normal.

- Ignition switch: OFF

ECUS TO BE CHECKED

- ETACS ECU

OK: "OK" is displayed on the "ETACS ECU" menu.

Q: Is the check result normal?

YES : The trouble can be an intermittent malfunction (Refer to GROUP 00 – How to Cope with Intermittent Malfunction P.00-5).

NO : Refer to Inspection Procedure A-3 "Communication with ETACS-ECU is not possible P.54C-51."

Main Index
Group TOC

Inspection Procedure O-2: The room lamp does not illuminate normally. <Vehicles with keyless entry>

⚠ CAUTION

Whenever the ECU is replaced, ensure that the input and output signal circuits are normal.

Room Lamp and Rear Personal Lamp Circuit

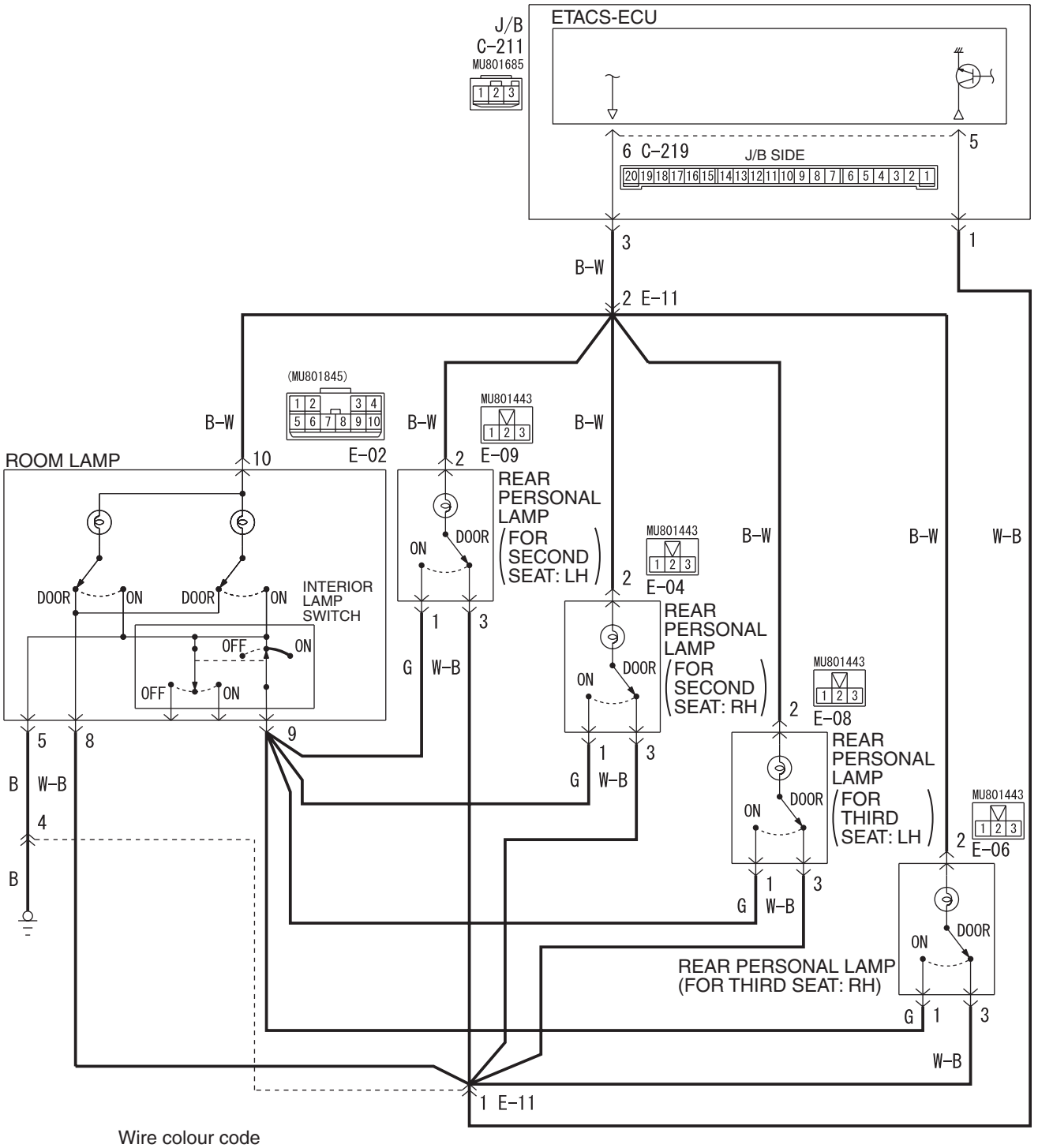

Wire colour code
B : Black LG : Light green G : Green L : Blue W : White Y : Yellow SB : Sky blue
BR : Brown O : Orange GR : Gray R : Red P : Pink V : Violet

W4X54E036A

Main Index
Group TOC

COMMENTS ON TROUBLE SYMPTOM

If the room lamp does not illuminate or extinguish normally, wiring harness connector(s) or the bulb may be defective.

POSSIBLE CAUSES

- Malfunction of the interior lamp switches
- Malfunction of the room lamp bulbs
- Damaged harness wires and connectors

DIAGNOSTIC PROCEDURE

Step 1. SWS monitor data list

<Selected item> ETACS ECU

- Driver's door is open

Item No.	Item name	Normal condition
Item 32	DR DOOR SW	ON

OK: Normal condition is displayed.

Q: Is the check result normal?

YES : Go to Step 2.

NO : Refer to inspection procedure P-5 "The driver's door switch signal is not received <LH drive vehicles>P.54C-346 or <RH drive vehicles>P.54C-348 ."

Step 2. ETACS switch data by using the SWS monitor

Check the ETACS-ECU signal related to the room lamp illumination.

- Ignition switch: OFF (key inserted)

Item No.	Item name	Normal condition
Item 03	Key reminder switch	OFF

- Passenger's door: Close → Open

Item No.	Item name	Normal condition
Item 05	Passenger's door switch	from OFF to ON

- Tailgate: Close → Open

Item No.	Item name	Normal condition
Item 07	Trunk or lift gate switch	from OFF to ON

- Rear door (RH): Close → Open

Item No.	Item name	Normal condition
Item 41	Rear door (right side) switch	from OFF to ON

- Rear door (LH): Close → Open

Item No.	Item name	Normal condition
Item 42	Rear door (left side) switch	from OFF to ON

- Driver's door: Unlock → Lock

Item No.	Item name	Normal condition
Item 21	Dr door lock actuator lock SW	from OFF to ON
Item 22	Dr door lock actuator unlock SW	from ON to OFF

- Room lamp on switch: ON

Item No.	Item name	Normal condition
Item 31	Room lamp ALL ON switch	ON

- Room lamp off switch: ON

Item No.	Item name	Normal condition
Item 32	Room lamp ALL OFF switch	ON

Main Index
Group TOC

OK: Normal conditions are displayed for all the items.

Q: Is the check result normal?

Normal conditions are displayed for all the items. : Go to Step 3.

Normal condition is not displayed for item No.03 : Refer to inspection procedure P-10 "The key reminder switch signal is not received P.54C-364."

Normal condition is not displayed for item No.05, 07, 41 or 42 : Refer to inspection procedure P-12 "All the door switch signals are not received P.54C-373."

Normal condition is not displayed for item No.21 and 22 : Refer to inspection procedure P-13 "The driver's door lock actuator switch signal is not received P.54C-379 <LH drive vehicles> or P.54C-383 <RH drive vehicles>."

Normal condition is not displayed for item No.31or 32 : Refer to inspection procedure P-20 "The interior lamp "all on" or "all off" switch signal is not sent to the ETACS-ECU P.54C-415."

Step 3. Retest the system.

Check that the right or left room lamp illuminates when the interior lamp switch is operated.

Q: Is the check result normal?

YES : Go to Step 6.

NO : Go to Step 4.

Step 4. Connector check: C-219 ETACS-ECU connector and E-02 room lamp connector

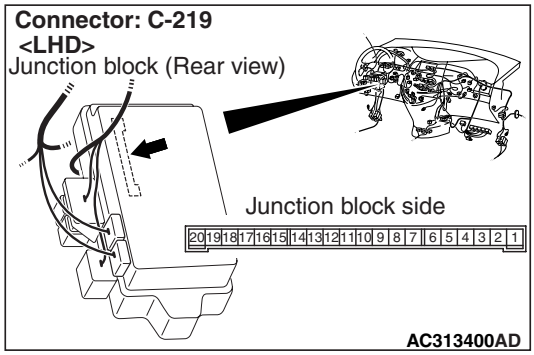

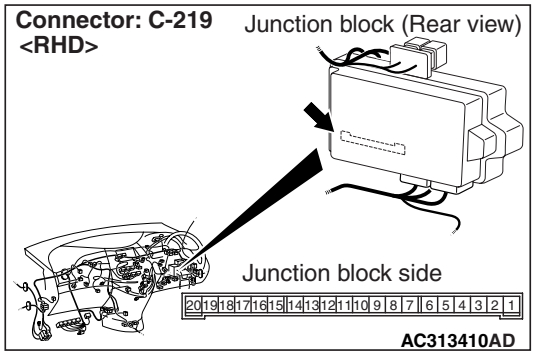

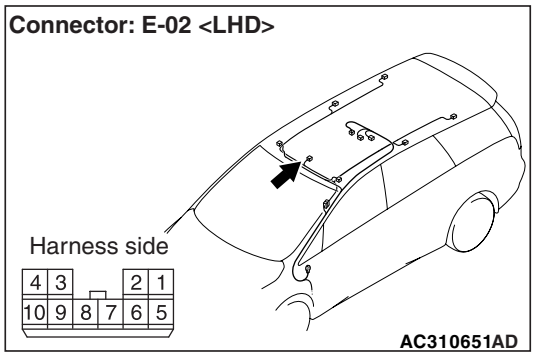

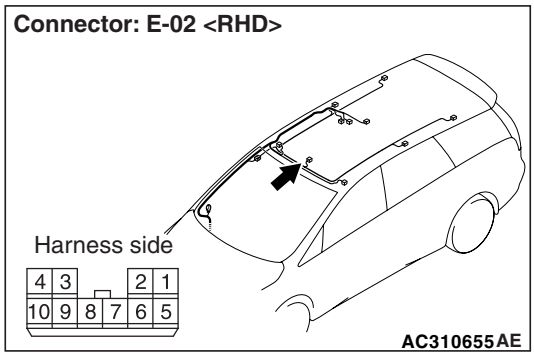

Q: Is the check result normal?

YES : Go to Step 5.

NO : Repair the defective connector.

Step 5. Check the wiring harness from C-219 ETACS-ECU connector terminal No.6 to E-02 room lamp connector terminal No.10.

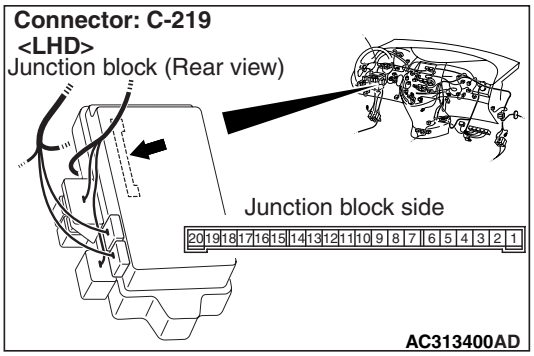

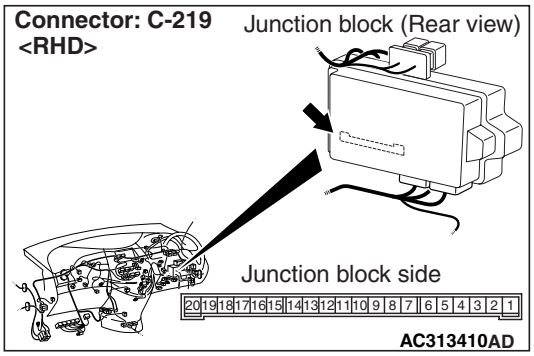

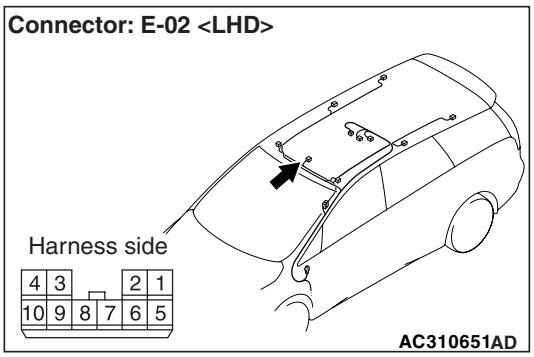

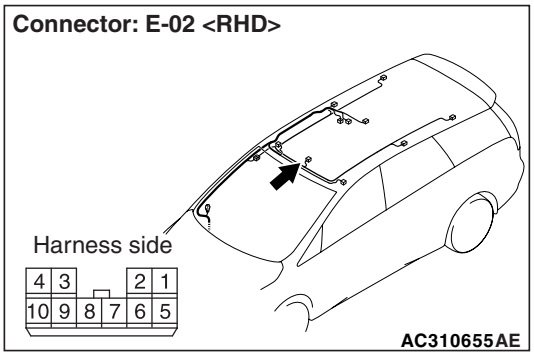

NOTE:

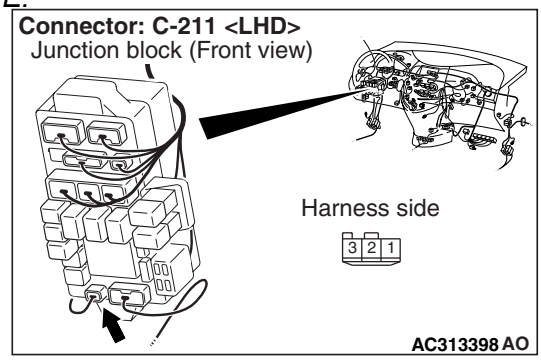

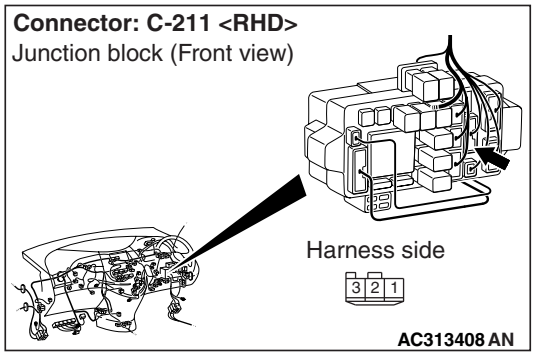

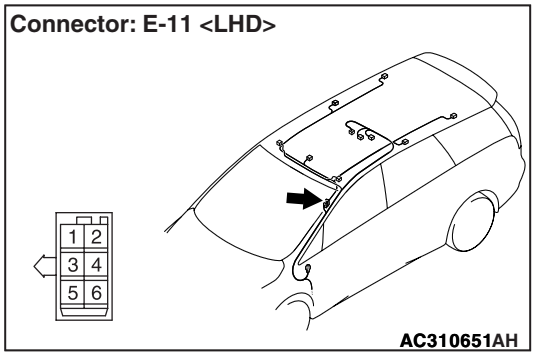

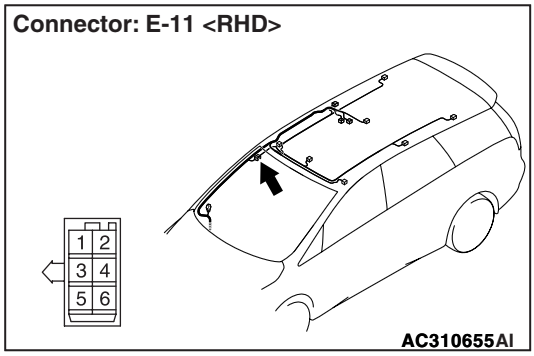

Prior to the wiring harness inspection, check intermediate connector E-11 and junction block connector C-211, and repair if necessary.

- Check the power supply line for open circuit.

Q: Is the check result normal?

YES : Replace the room lamp.

NO : Repair the wiring harness.

Main Index
Group TOC

Step 6. Check the room lamp switch.

Check which position (ON or DOOR) of the room lamp switch does not activate the room lamp.

Q: Which switch position does not activate the lamp?
The lamp illuminates at neither the ON nor DOOR position. : Go to Step 7.
The lamp does not illuminate at the ON position. : Go to Step 7.
The lamp does not illuminate at the DOOR position. : Go to Step 9.

Step 7. Connector check: E-02 room lamp connector

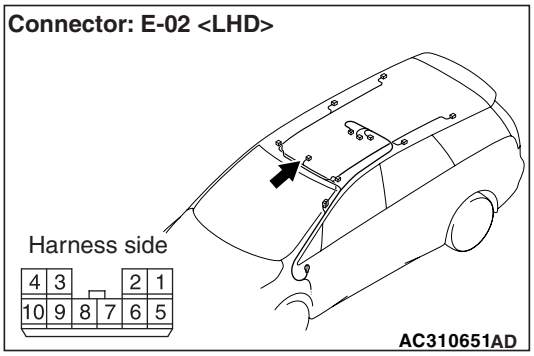

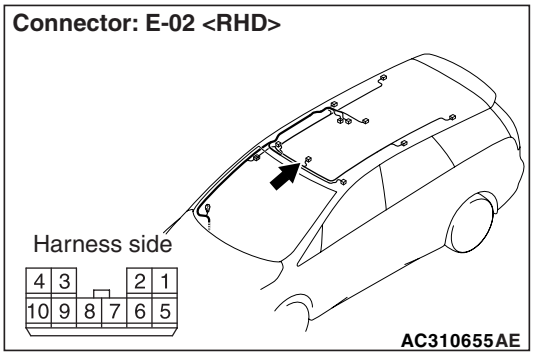

Q: Is the check result normal?
YES : Go to Step 8.
NO : Repair the defective connector.

Step 8. Check the bulbs of the room lamp.

Check that the room lamp bulbs are not burned out.

Q: Is the check result normal?
YES : Replace the room lamp.
NO : Replace the room lamp bulb.

Step 9. Connector check: E-02 room lamp connector

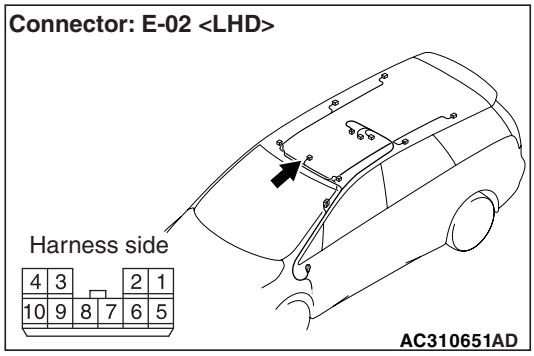

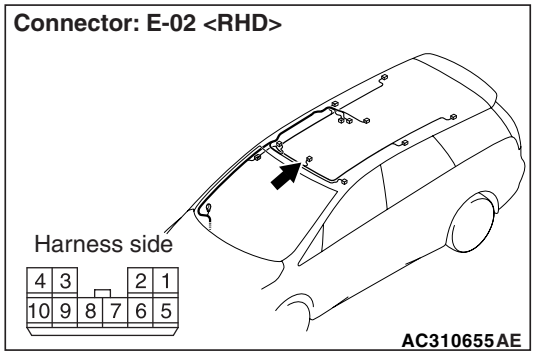

Q: Is the check result normal?
YES : Go to Step 10.
NO : Repair the defective connector.

Step 10. Check the bulbs of the room lamp.

Check that the room lamp bulbs are not burned out.

Q: Is the check result normal?
YES : Go to Step 11.
NO : Replace the room lamp bulb.

Step 11. Connector check: C-219 ETACS-ECU connector

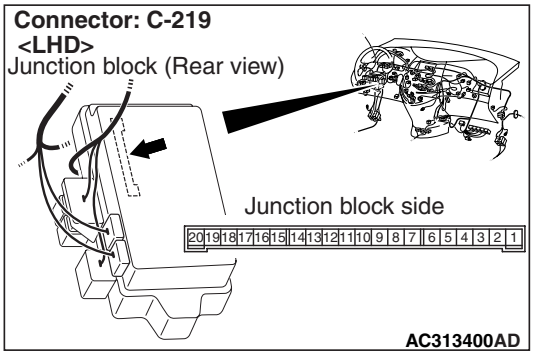

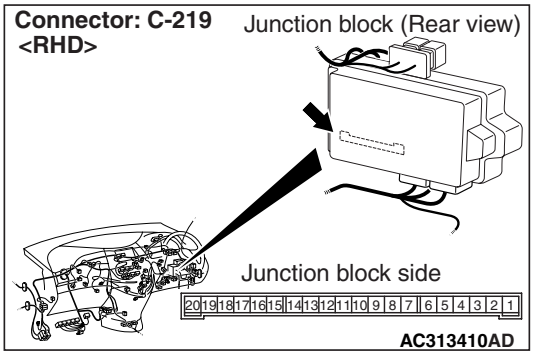

Q: Is the check result normal?

YES : Go to Step 12.

NO : Repair the defective connector.

Step 12. Check the wiring harness from C-219 ETACS-ECU connector terminal No.5 to E-02 room lamp connector terminal No.8.

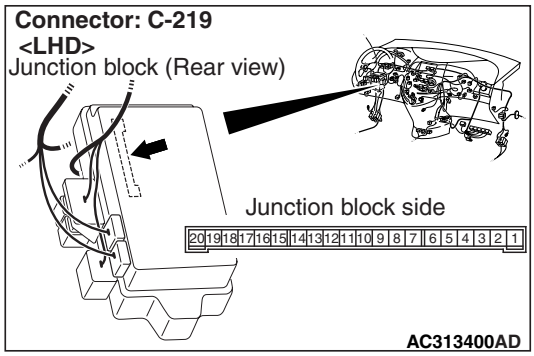

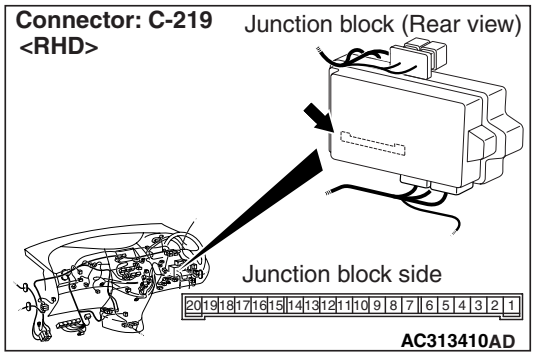

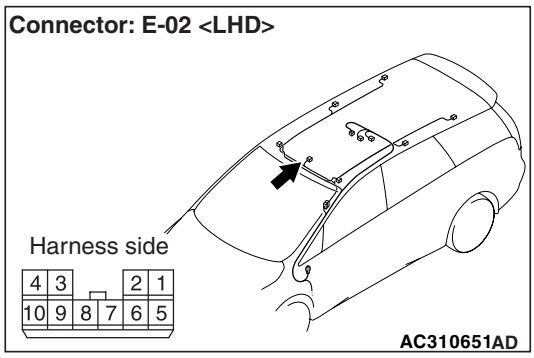

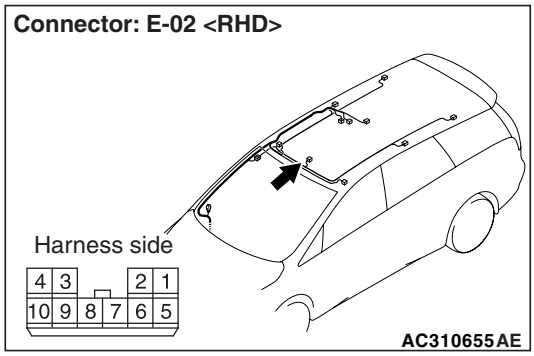

Main Index
Group TOC

NOTE:

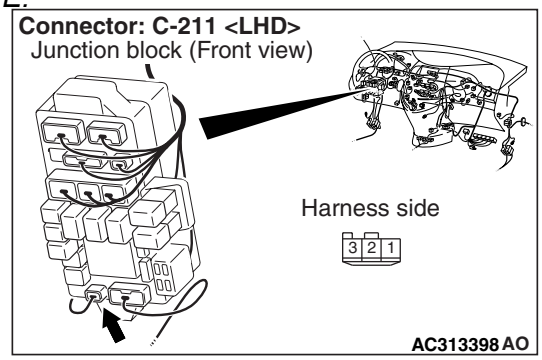

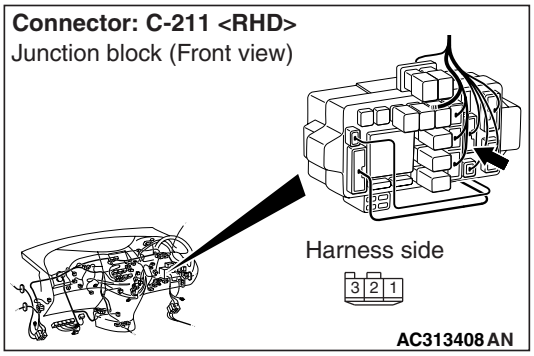

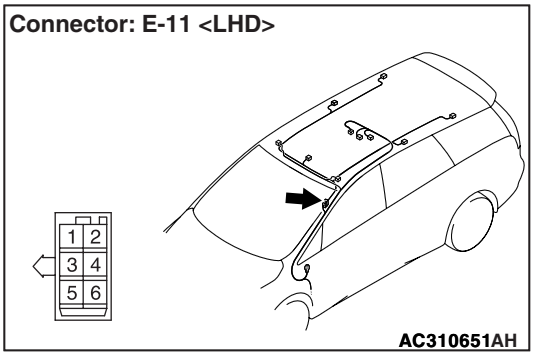

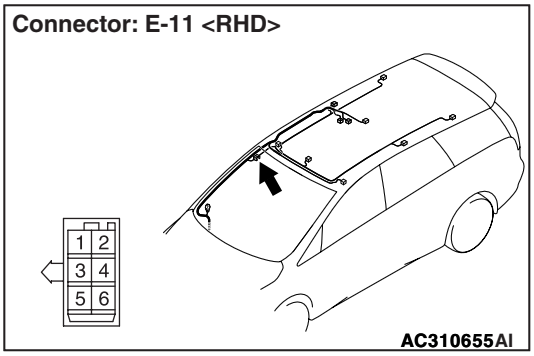

Prior to the wiring harness inspection, check intermediate connector E-11 and junction block connector C-211, and repair if necessary.

- Check the earth wires for open circuit.

Q: Is the check result normal?

YES : . Replace the room lamp.

NO : . Repair the wiring harness.

Main Index
Group TOC

Inspection Procedure O-2: The room lamp does not illuminate normally. <Vehicles without keyless entry system>

⚠ CAUTION

Whenever the ECU is replaced, ensure that the input and output signal circuits are normal.

Room Lamp and Rear Personal Lamp Circuit

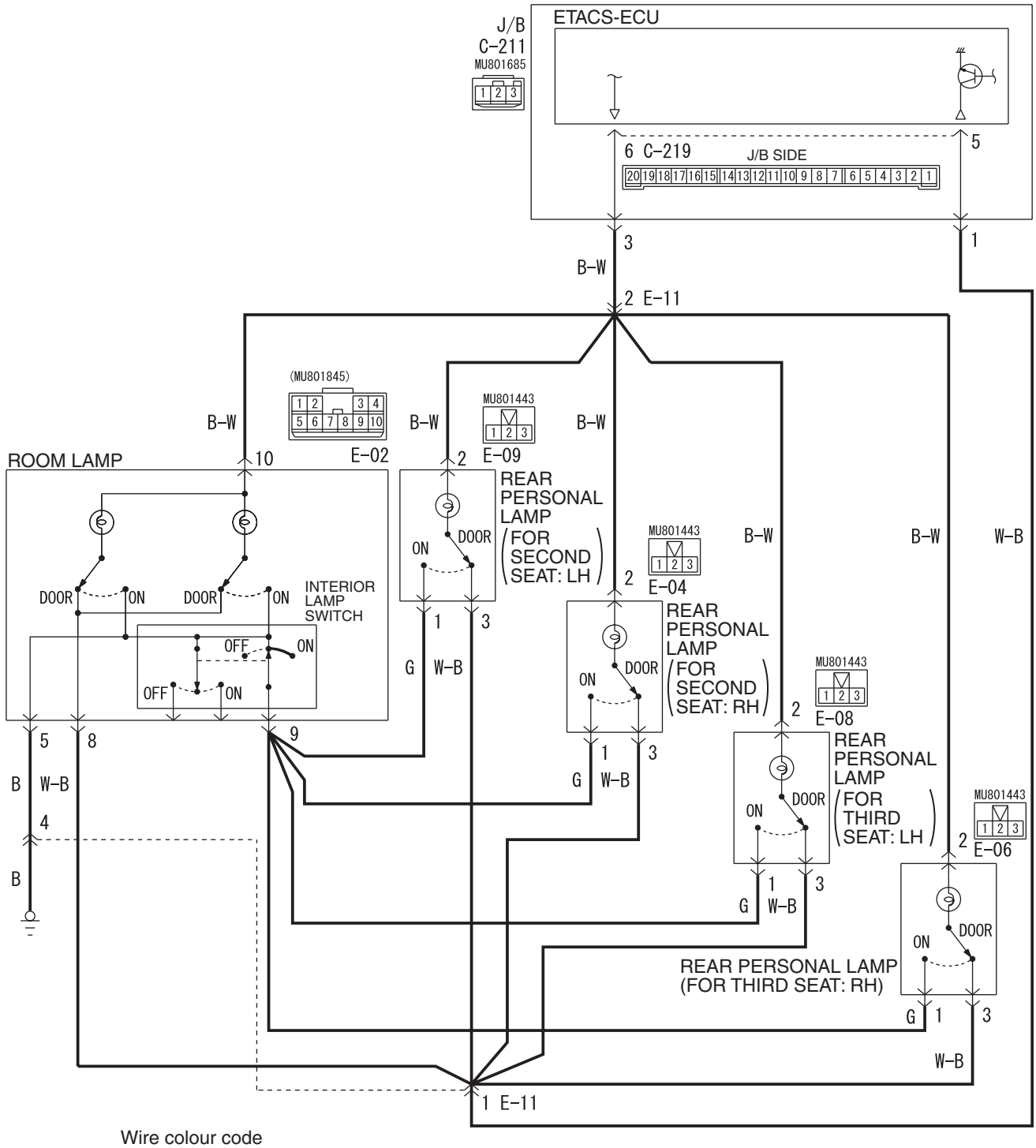

Wire colour code
B : Black LG : Light green G : Green L : Blue W : White Y : Yellow SB : Sky blue
BR : Brown O : Orange GR : Gray R : Red P : Pink V : Violet

W4X54E036A

Main Index
Group TOC

COMMENTS ON TROUBLE SYMPTOM

If the room lamp does not illuminate or extinguish normally, wiring harness connector(s) or the bulb may be defective.

POSSIBLE CAUSES

- Malfunction of the interior lamp switches
- Malfunction of the room lamp bulbs
- Damaged harness wires and connectors

DIAGNOSTIC PROCEDURE

Step 1. SWS monitor data list

<Selected item> ETACS ECU

- Driver's door is open

Item No.	Item name	Normal condition
Item 32	DR DOOR SW	ON

OK: Normal condition is displayed.

Q: Is the check result normal?

YES : Go to Step 2.

NO : Refer to inspection procedure P-5 "The driver's door switch signal is not received <LH drive vehicles>P.54C-346 or <RH drive vehicles>P.54C-348 ."

Step 2. ETACS switch data by using the SWS monitor

Check the ETACS-ECU signal related to the room lamp illumination.

- Ignition switch: OFF (key inserted)

Item No.	Item name	Normal condition
Item 03	Key reminder switch	OFF

- Passenger's door: Close → Open

Item No.	Item name	Normal condition
Item 05	Passenger's door switch	from OFF to ON

- Tailgate: Close → Open

Item No.	Item name	Normal condition
Item 07	Trunk or lift gate switch	from OFF to ON

- Rear door (RH): Close → Open

Item No.	Item name	Normal condition
Item 41	Rear door (right side) switch	from OFF to ON

- Rear door (LH): Close → Open

Item No.	Item name	Normal condition
Item 42	Rear door (left side) switch	from OFF to ON

- Driver's door: Unlock → Lock

Item No.	Item name	Normal condition
Item 21	Dr door lock actuator lock SW	from OFF to ON
Item 22	Dr door lock actuator unlock SW	from ON to OFF

OK: Normal conditions displayed for all the items.

Q: Is the check result normal?

Normal conditions are displayed for all the items. : Go to Step 3.

Normal condition is not displayed for item No.03 : Refer to inspection procedure P-10 "The key reminder switch signal is not received P.54C-364."

Normal condition is not displayed for item No.05, 07, 41 or 42 : Refer to inspection procedure P-12 "All the door switch signals are not received P.54C-373."

Normal condition is not displayed for item No.21 and 22 : Refer to inspection procedure P-13 "The driver's door lock actuator switch signal is not received <LH drive vehicles>P.54C-379 or <RH drive vehicles>P.54C-383 ."

Step 3. Pulse check

Check the input signals below, which is related to the room lamp.

System switch	Check condition
Interior lamp ON switch	When turned from OFF to ON
Interior lamp OFF switch	When turned from ON to OFF

OK: The M.U.T.-III sounds or the voltmeter needle fluctuates.

Q: Is the check result normal?

YES : Go to Step 4.

NO : Refer to inspection procedure P-20 "The interior lamp "all on" or "all off" switch signal is not sent to the ETACS-ECU P.54C-415."

Step 4. Retest the system.

Check that the right or left room lamp illuminates when the interior lamp switch is operated.

Q: Is the check result normal?

YES : Go to Step 7.

NO : Go to Step 5.

Step 5. Connector check: C-219 ETACS-ECU connector and E-02 room lamp connector

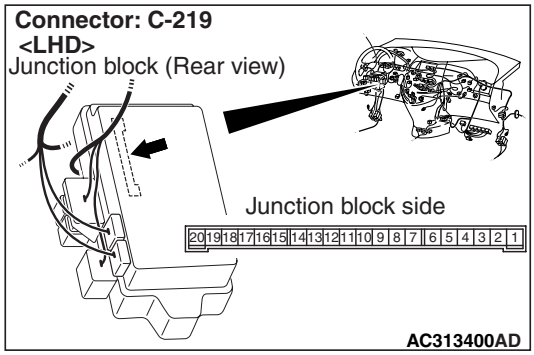

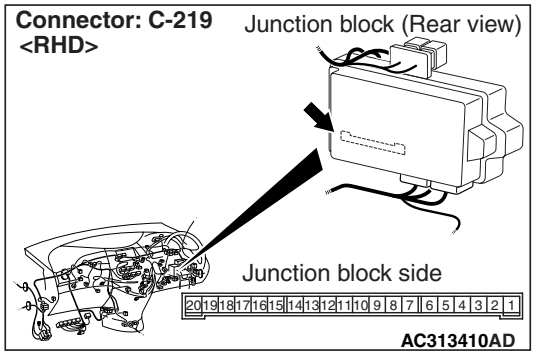

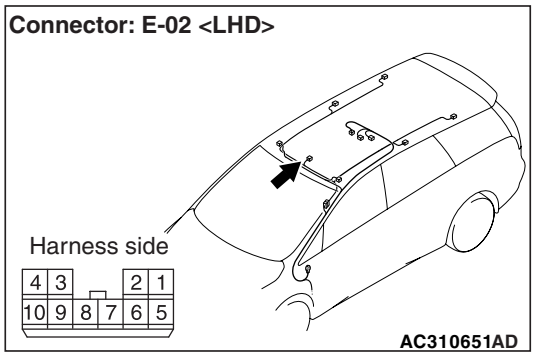

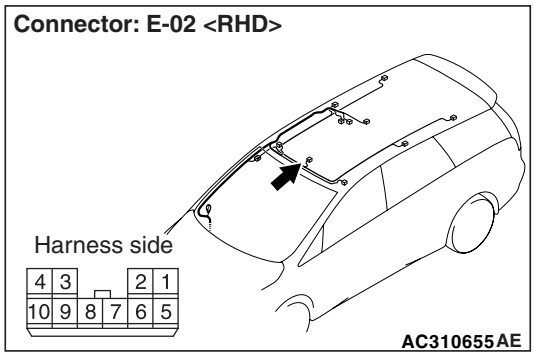

Q: Is the check result normal?

YES : Go to Step 6.

NO : Repair the defective connector.

Main Index
Group TOC

Step 6. Check the wiring harness from C-219 ETACS-ECU connector terminal No.6 to E-02 room lamp connector terminal No.10.

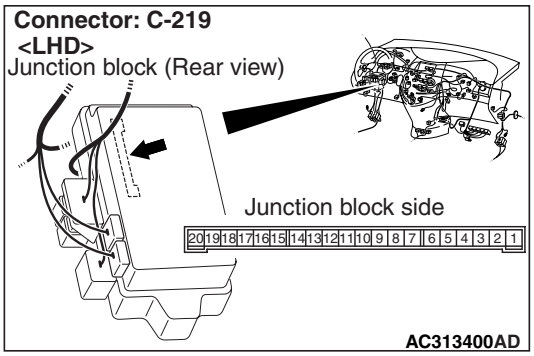

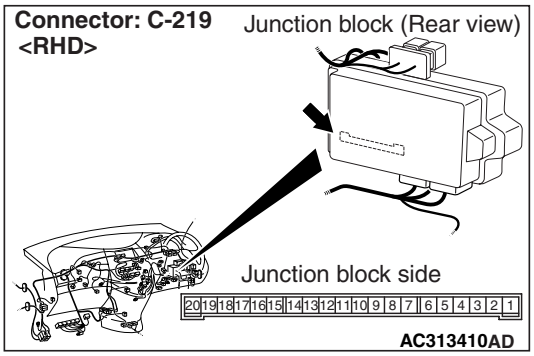

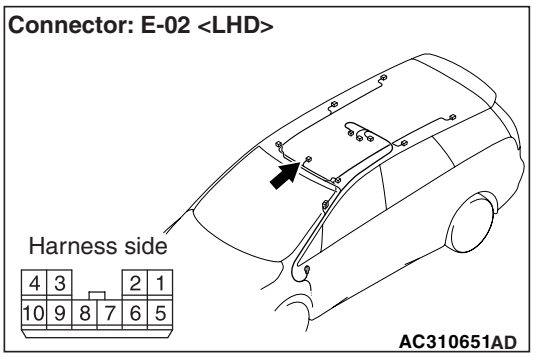

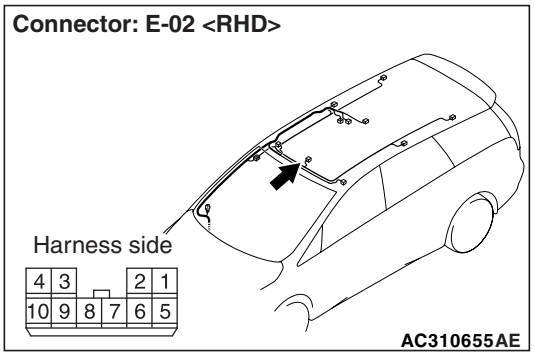

NOTE:

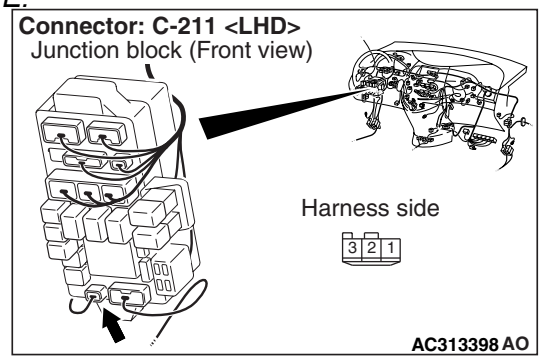

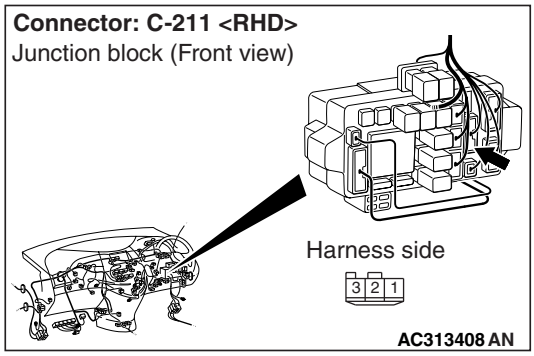

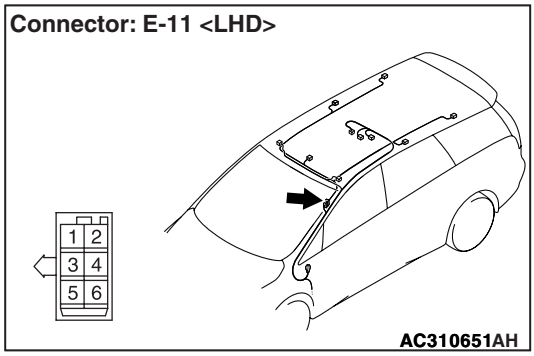

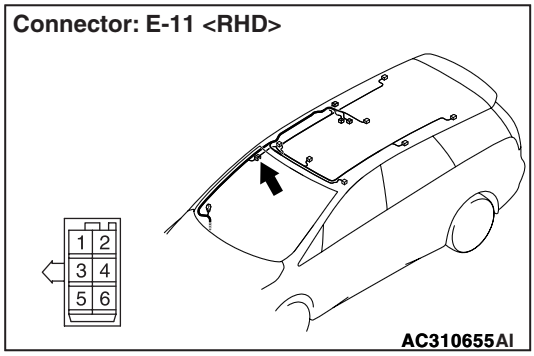

Prior to the wiring harness inspection, check intermediate connector E-11 and junction block connector C-211, and repair if necessary.

- Check the power supply line for open circuit.

Q: Is the check result normal?

YES : Replace the room lamp.

NO : Repair the wiring harness.

Main Index
Group TOC

Step 7. Check the room lamp switch.

Check which position (ON or DOOR) of the room lamp switch does not activate the room lamp.

Q: Which switch position does not activate the lamp?
The lamp illuminates at neither the ON nor DOOR position. : Go to Step 8.
The lamp does not illuminate at the ON position. : Go to Step 8.
The lamp does not illuminate at the DOOR position. : Go to Step 10.

Step 8. Connector check: E-02 room lamp connector

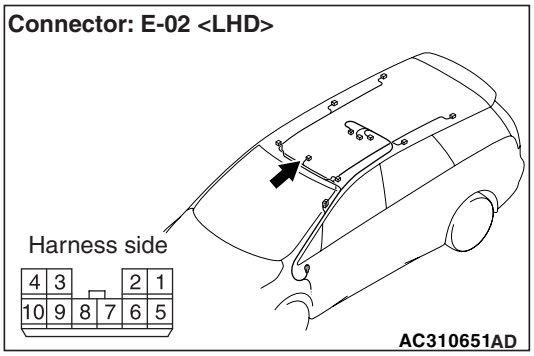

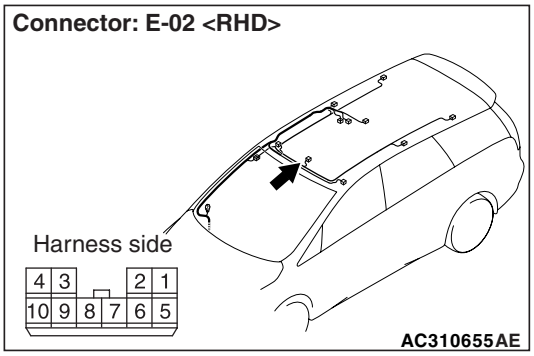

Q: Is the check result normal?
YES : Go to Step 9.
NO : Repair the defective connector.

Step 9. Check the bulbs of the room lamp.

Check that the room lamp bulbs are not burned out.

Q: Is the check result normal?
YES : Replace the room lamp.
NO : Replace the room lamp bulb.

Step 10. Connector check: E-02 room lamp connector

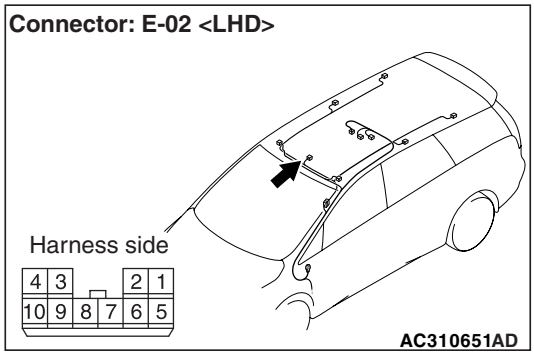

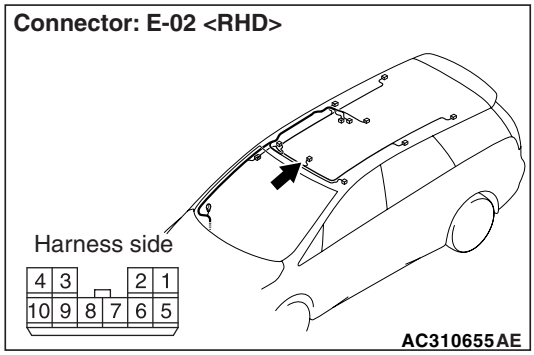

Q: Is the check result normal?
YES : Go to Step 11.
NO : Repair the defective connector.

Step 11. Check the bulbs of the room lamp.

Check that the room lamp bulbs are not burned out.

Q: Is the check result normal?
YES : Go to Step 12.
NO : Replace the room lamp bulb.

Main Index
Group TOC

Step 12. Connector check: C-219 ETACS-ECU connector

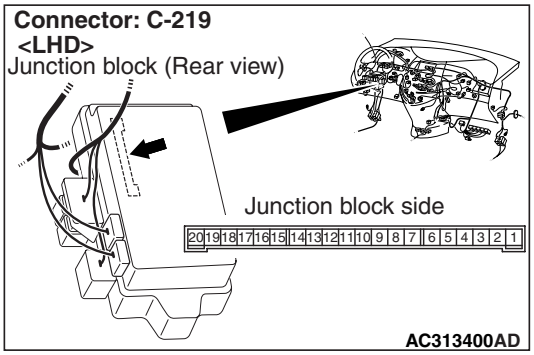

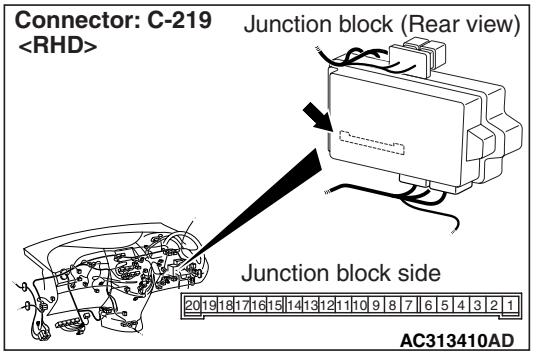

Q: Is the check result normal?

YES : Go to Step 13.

NO : Repair the defective connector.

Step 13. Check the wiring harness from C-219 ETACS-ECU connector terminal No.5 to E-02 room lamp connector terminal No.8.

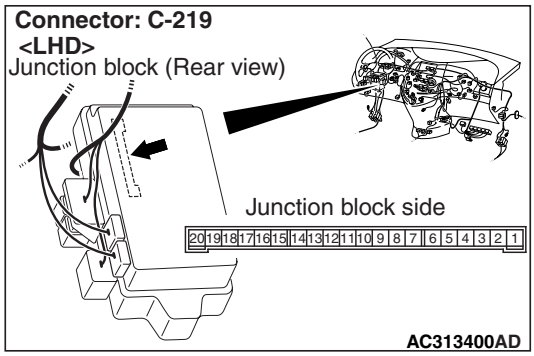

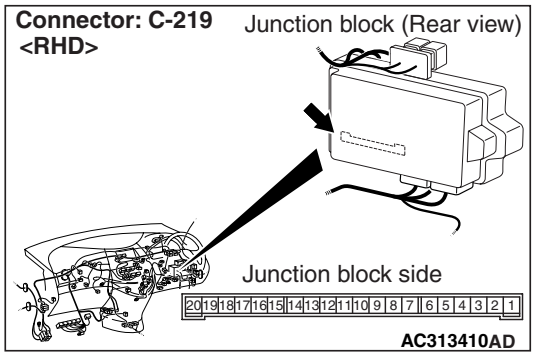

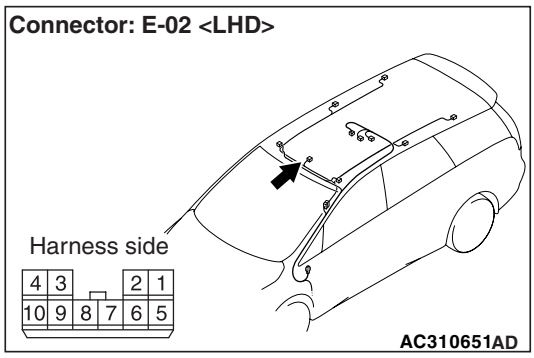

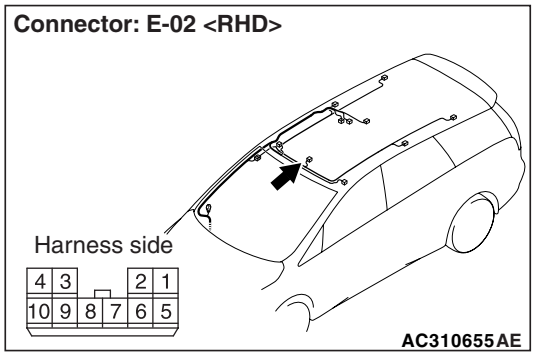

Main Index
Group TOC

NOTE:

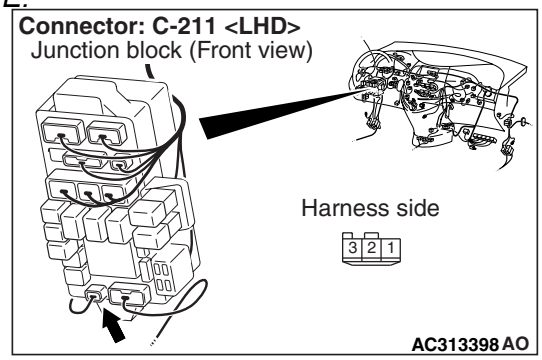

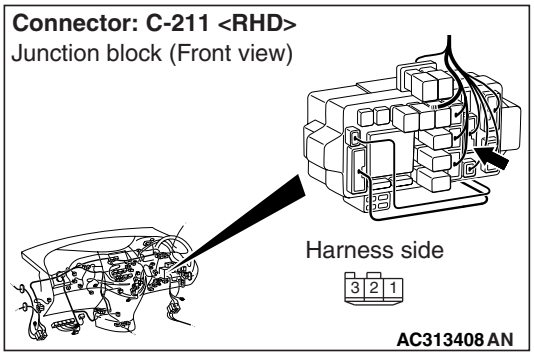

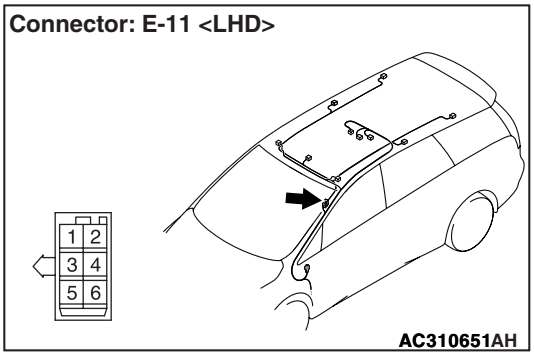

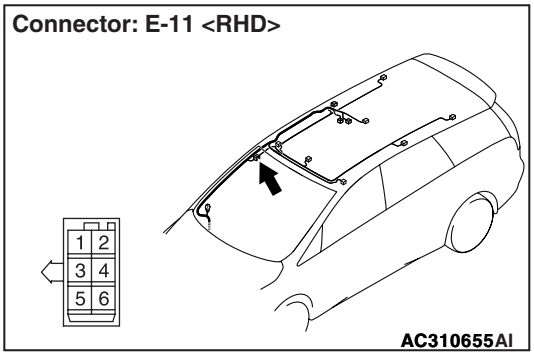

Prior to the wiring harness inspection, check intermediate connector E-11 and junction block connector C-211, and repair if necessary.

- Check the earth wires for open circuit.

Q: Is the check result normal?

YES : . Replace the room lamp.

NO : . Repair the wiring harness.

Main Index
Group TOC

Inspection Procedure O-3: The rear personal lamp does not illuminate normally. <Vehicles with keyless entry system>

⚠ CAUTION

Whenever the ECU is replaced, ensure that the input and output signal circuits are normal.

Room Lamp and Rear Personal Lamp Circuit

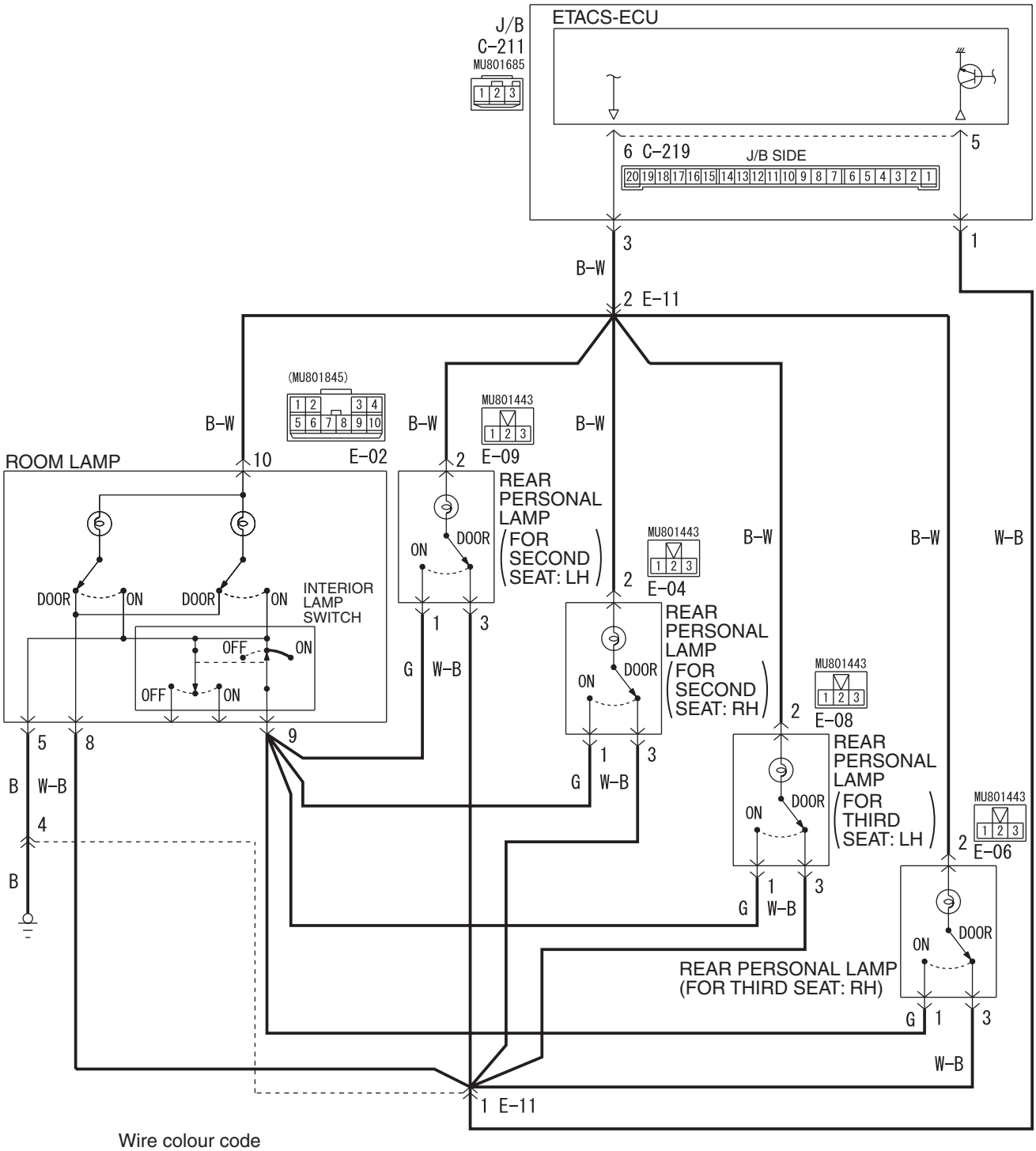

Wire colour code
B : Black LG : Light green G : Green L : Blue W : White Y : Yellow SB : Sky blue
BR : Brown O : Orange GR : Gray R : Red P : Pink V : Violet

W4X54E036A

Main Index
Group TOC

COMMENTS ON TROUBLE SYMPTOM

If the rear personal lamps do not illuminate or extinguish normally, wiring harness connector(s) or the bulb may be defective.

POSSIBLE CAUSES

- Malfunction of the interior lamp switches
- Malfunction of the rear personal lamp bulbs
- Damaged harness wires and connectors

DIAGNOSTIC PROCEDURE

Step 1. SWS monitor data list

<Selected item> ETACS ECU

- Driver's door is open

Item No.	Item name	Normal condition
Item 32	DR DOOR SW	ON

OK: Normal condition is displayed.

Q: Is the check result normal?

YES : Go to Step 2.

NO : Refer to inspection procedure P-5 "The driver's door switch signal is not received <LH drive vehicles>P.54C-346 or <RH drive vehicles>P.54C-348 ."

Step 2. ETACS switch data by using the SWS monitor

Check the ETACS-ECU signal related to the rear personal lamp illumination.

- Ignition switch: OFF (key inserted)

Item No.	Item name	Normal condition
Item 03	Key reminder switch	OFF

- Passenger's door: Close → Open

Item No.	Item name	Normal condition
Item 05	Passenger's door switch	from OFF to ON

- Tailgate: Close → Open

Item No.	Item name	Normal condition
Item 07	Trunk or lift gate switch	from OFF to ON

- Rear door (RH): Close → Open

Item No.	Item name	Normal condition
Item 41	Rear door (right side) switch	from OFF to ON

- Rear door (LH): Close → Open

Item No.	Item name	Normal condition
Item 42	Rear door (left side) switch	from OFF to ON

- Driver's door: Unlock → Lock

Item No.	Item name	Normal condition
Item 21	Dr door lock actuator lock SW	from OFF to ON
Item 22	Dr door lock actuator unlock SW	from ON to OFF

- Room lamp on switch: ON

Item No.	Item name	Normal condition
Item 31	Room lamp ALL ON switch	ON

- Room lamp off switch: ON

Item No.	Item name	Normal condition
Item 32	Room lamp ALL OFF switch	ON

Main Index
Group TOC

OK: Normal conditions displayed for all the items.

Q: Is the check result normal?

Normal conditions are displayed for all the items. : Go to Step 3.

Normal condition is not displayed for item No.03 : Refer to inspection procedure P-10 "The key reminder switch signal is not received P.54C-364."

Normal condition is not displayed for item No.05, 07, 41 or 42 : Refer to inspection procedure P-12 "All the door switch signals are not received P.54C-373."

Normal condition is not displayed for item No.21 and 22 : Refer to inspection procedure P-13 "The driver's door lock actuator switch signal is not received <LH drive vehicles>P.54C-379 or <RH drive vehicles>P.54C-383 ."

Normal condition is not displayed for item No.31 or 32 : Refer to inspection procedure P-20 "The interior lamp "all on" or "all off" switch signal is not sent to the ETACS-ECU P.54C-415."

Step 3. Retest the system.

Check which lamp does not illuminate when the lamp switches are operated.

Q: Which lamp does not illuminate?

No lamps illuminate : Go to Step 4.

One of the second seat lamps (RH or LH) or the third seat lamps (RH or LH) does not illuminate. : Go to Step 8.

Step 4. Check the rear personal lamp switches.

Check which position (ON or DOOR) of the rear personal lamp switch does not activate the relevant lamp.

Q: Which switch position does not activate the lamp?

The lamp illuminates at neither the ON nor DOOR position. : Go to Step 5.

The lamp does not illuminate at the DOOR position. : Go to Step 7.

The lamp does not illuminate at the ON position. : Replace the rear personal lamp.

Step 5. Connector check: C-219 ETACS-ECU connector, E-09 rear personal lamp connector

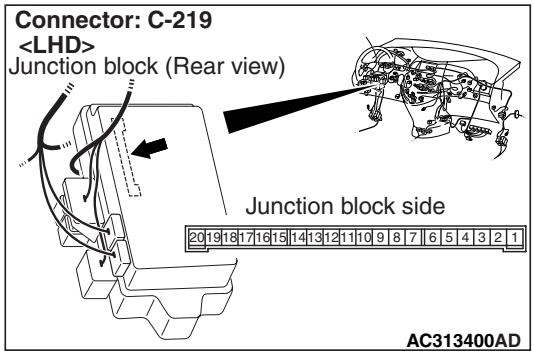

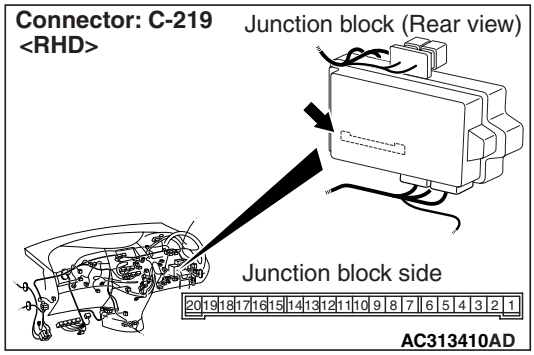

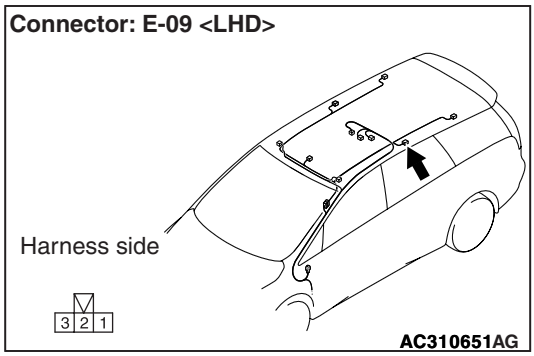

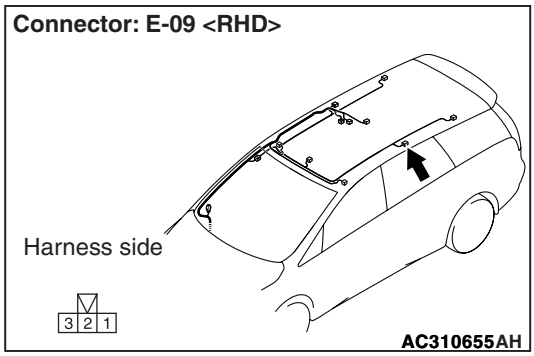

Q: Is the check result normal?

YES : Go to Step 6.

NO : Repair the defective connector.

Step 6. Check the wiring harness from C-219 ETACS-ECU connector terminal No.6 to E-09 rear personal lamp connector terminal No.2.

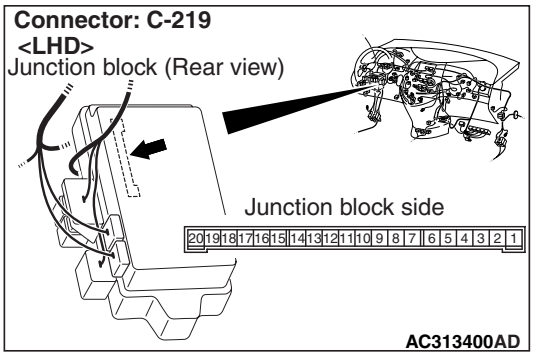

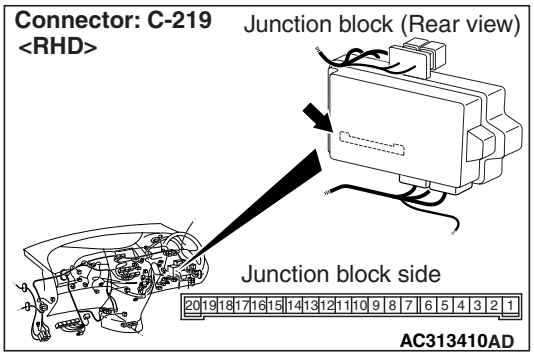

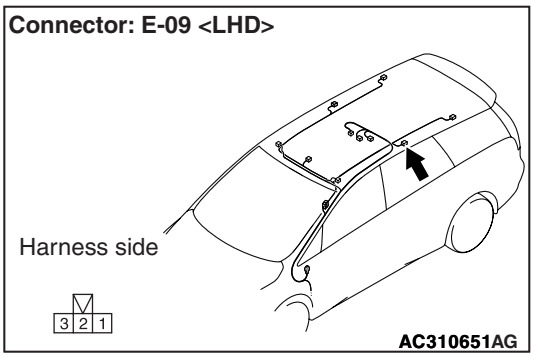

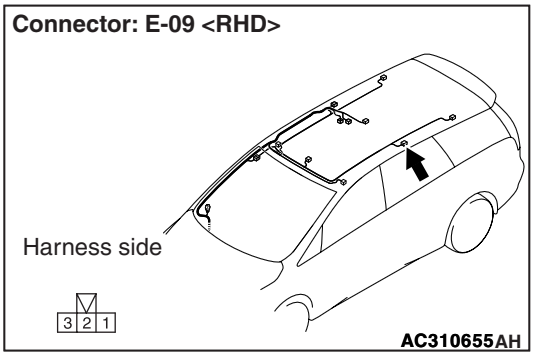

NOTE:

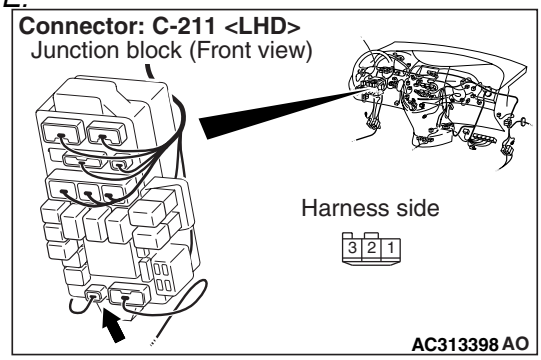

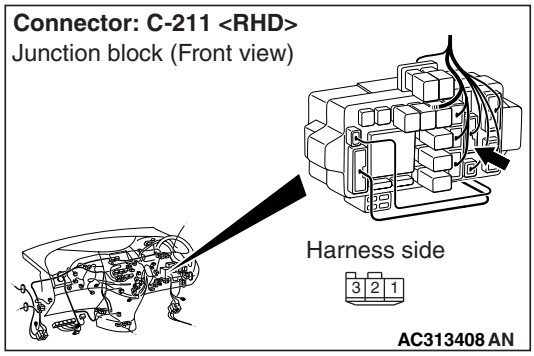

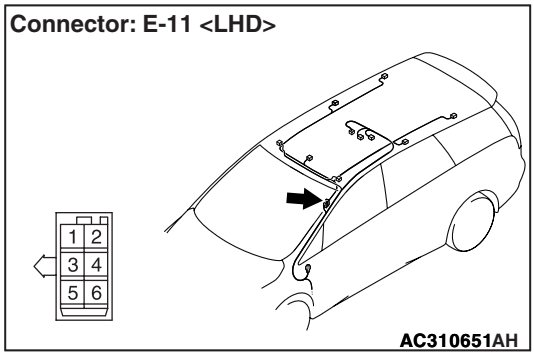

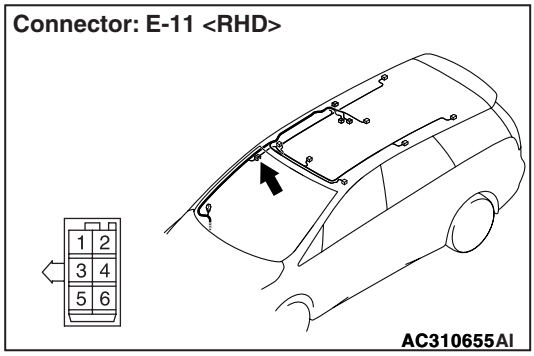

Prior to the wiring harness inspection, check intermediate connector E-11 and junction block connector C-211, and repair if necessary.

- Check the earth wires for open circuit.

Q: Is the check result normal?

YES : Replace the rear personal lamp.

NO : Repair the wiring harness.

Main Index
Group TOC

Step 7. Check the wiring harness from C-219 ETACS-ECU connector terminal No.5 to E-09 rear personal lamp connector terminal No.3.

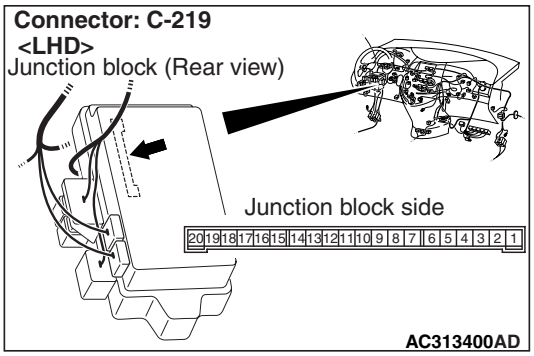

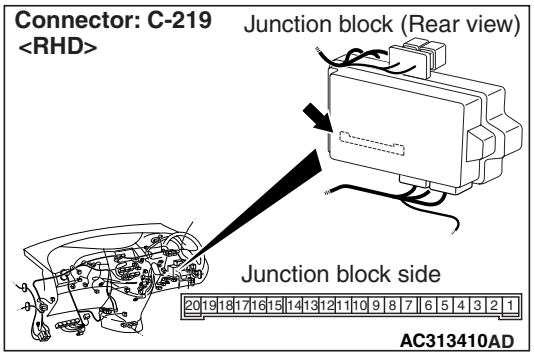

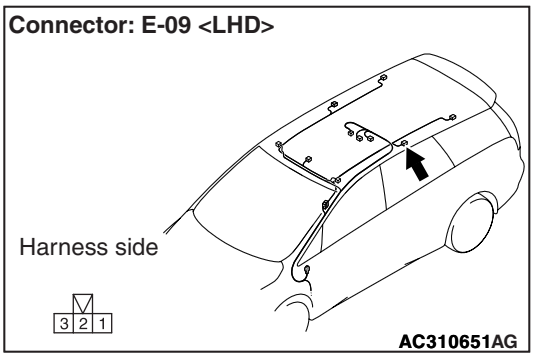

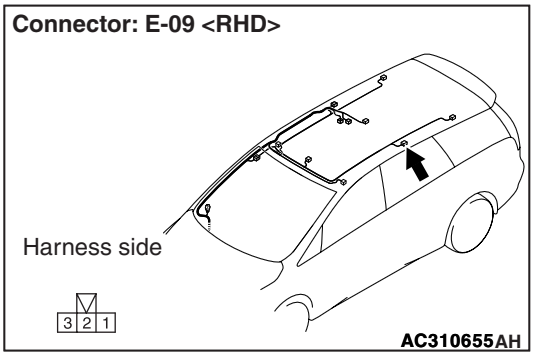

NOTE:

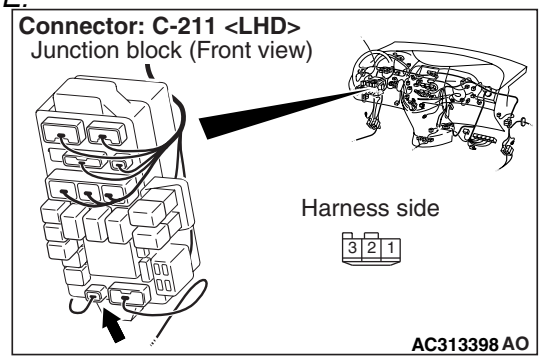

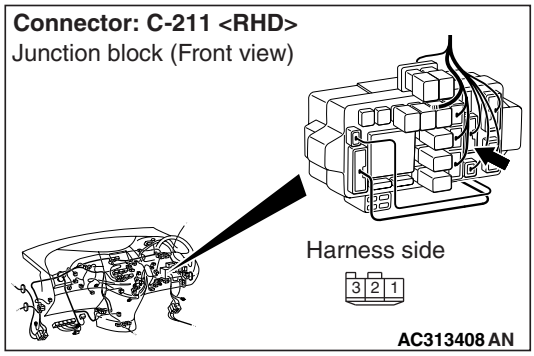

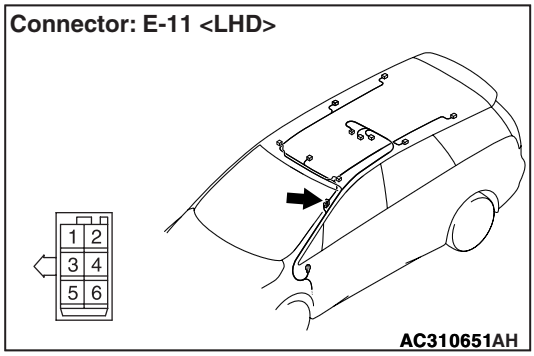

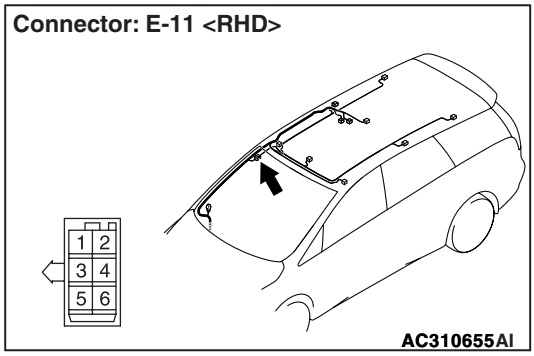

Prior to the wiring harness inspection, check intermediate connector E-11 and junction block connector C-211, and repair if necessary.

- Check the earth wires for open circuit.

Q: Is the check result normal?

YES : Replace the rear personal lamp.

NO : Repair the wiring harness.

Step 8. Connector check: E-09 rear personal lamp connector (for second seat: LH), E-04 rear personal lamp connector (for second seat: RH), E-08 rear personal lamp connector (for third seat: LH), E-06 rear personal lamp connector (for third seat: RH)

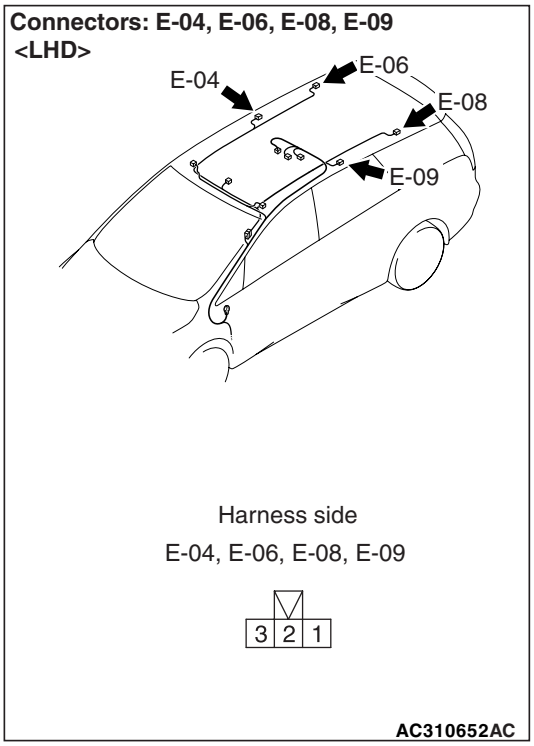

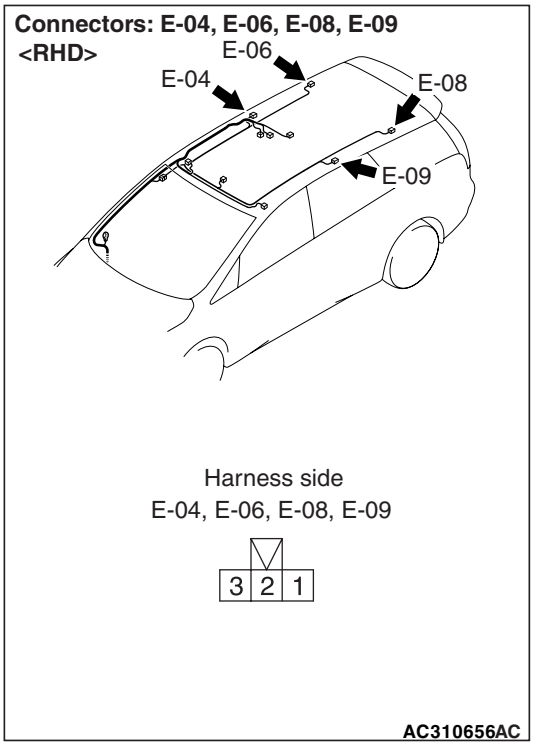

Q: Is the check result normal?
YES : Go to Step 9.
NO : Repair the defective connector.

Step 9. Check the bulbs of the rear personal lamp.
Check that the rear personal lamp bulbs are not burned out.

Q: Is the check result normal?
YES : Go to Step 10.
NO : Replace the rear personal lamp bulb.

Step 10. Check the rear personal lamp switches.
Check which switch position (ON or DOOR) does not activate the rear personal lamp.

Q: Which switch position does not activate the lamp?
The lamp illuminates at neither the ON nor DOOR position. : Go to Step 11.
The lamp does not illuminate at the DOOR position. : Go to Step 12.
The lamp does not illuminate at the ON position. : Go to Step 14.

Step 11. Check the wiring harness from C-219 ETACS-ECU connector terminal No.6 to E-09 rear personal lamp (for second seat: RH) connector terminal No.2, E-04 rear personal lamp (for second seat: LH) connector terminal No.2, E-08 rear personal lamp (for third seat: LH) connector terminal No.2, E-06 rear personal lamp (for third seat: RH) connector terminal No.2.

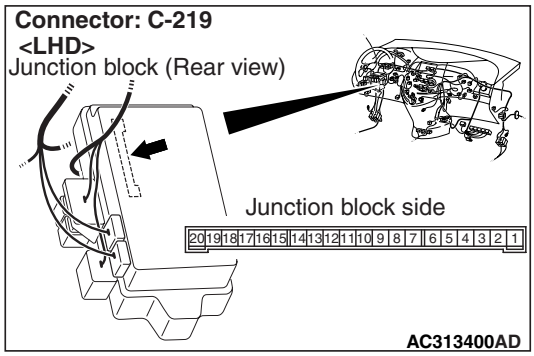

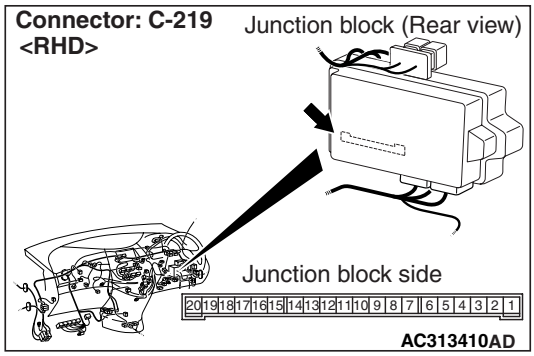

Main Index
Group TOC

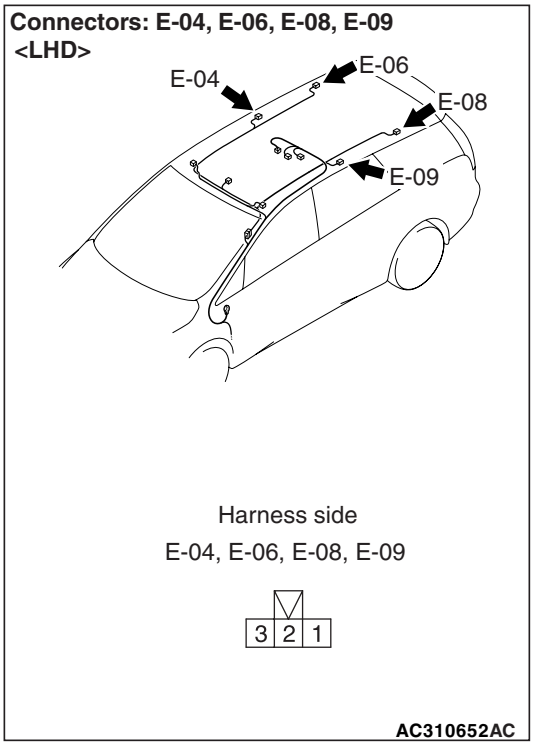

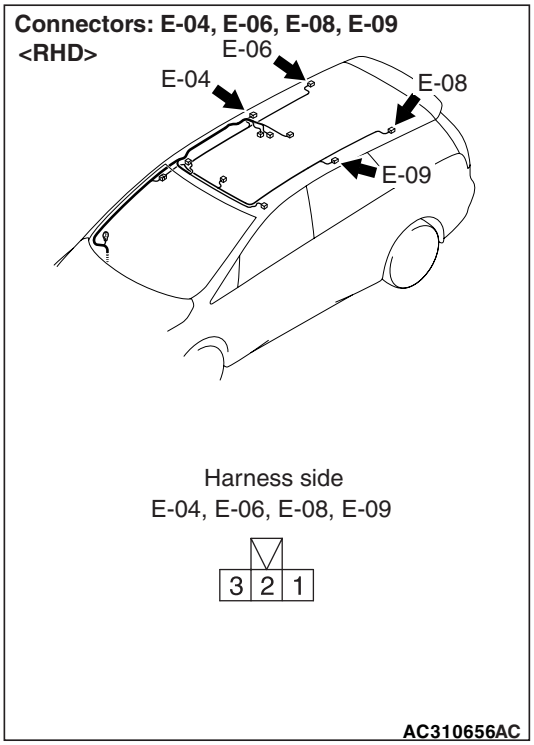

NOTE:

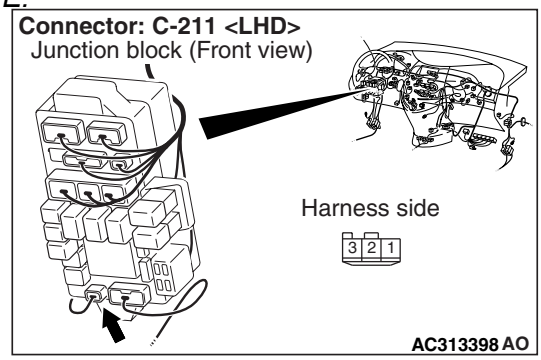

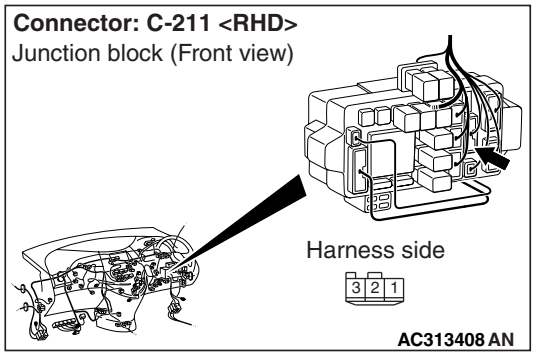

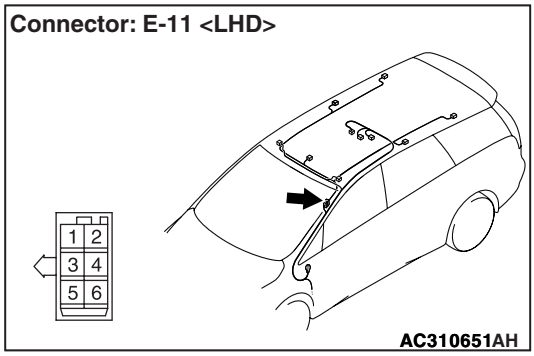

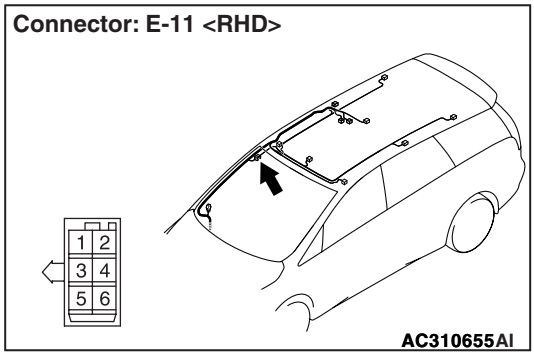

Prior to the wiring harness inspection, check intermediate connector E-11 and junction block connector C-211, and repair if necessary.

- Check the power supply line for open circuit.

Q: Is the check result normal?

YES : Replace the rear personal lamp.

NO : Repair the wiring harness.

Step 12. Connector check: E-02 room lamp connector

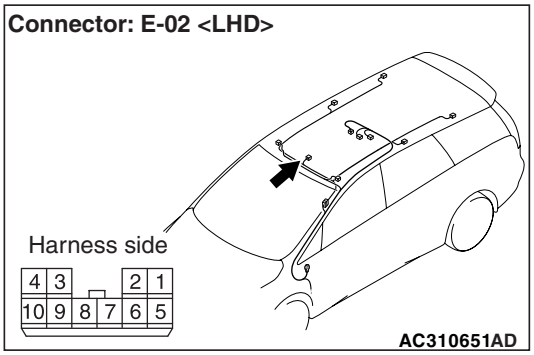

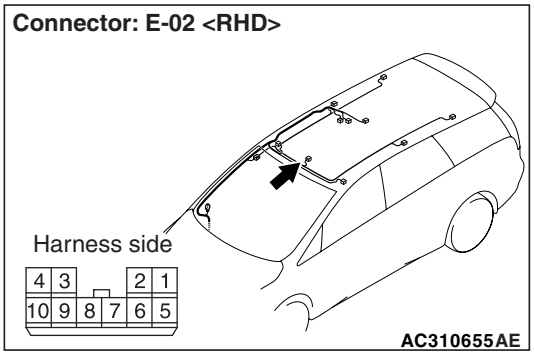

Q: Is the check result normal?

YES : Go to Step 13.

NO : Repair the defective connector.

Step 13. Check the wiring harness from E-02 room lamp connector terminal No.9 to E-09 rear personal lamp (for second seat: RH) connector terminal No.1, E-04 rear personal lamp (for second seat: LH) connector terminal No.1, E-08 rear personal lamp (for third seat: LH) connector terminal No.1, E-06 rear personal lamp (for third seat: RH) connector terminal No.1.

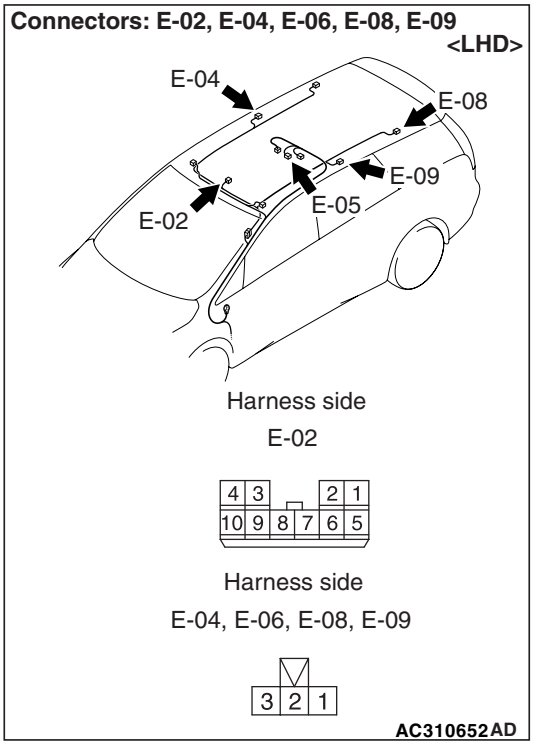

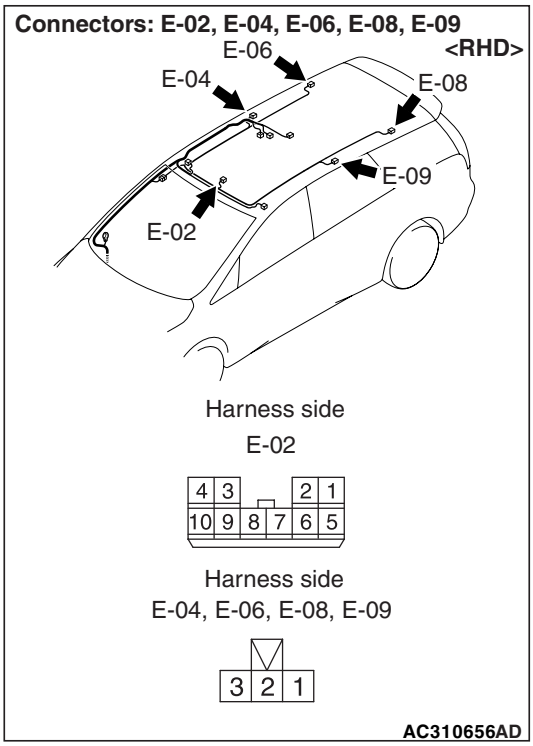

- Check the earth wires for open circuit.

Main Index
Group TOC

Q: Is the check result normal?
YES : Replace the rear personal lamp.
NO : Repair the wiring harness.

Step 14. Check the wiring harness from C-219 ETACS-ECU connector terminal No.5 to E-09 rear personal lamp (for second seat: RH) connector terminal No.3, E-04 rear personal lamp (for second seat: LH) connector terminal No.3, E-08 rear personal lamp (for third seat: LH) connector terminal No.3, E-06 rear personal lamp (for third seat: RH) connector terminal No.3.

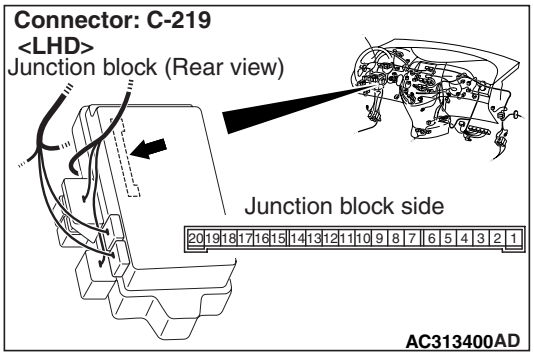

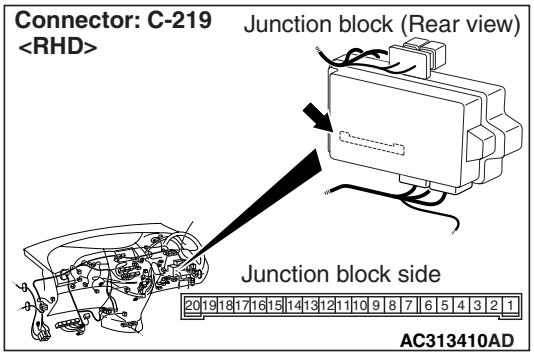

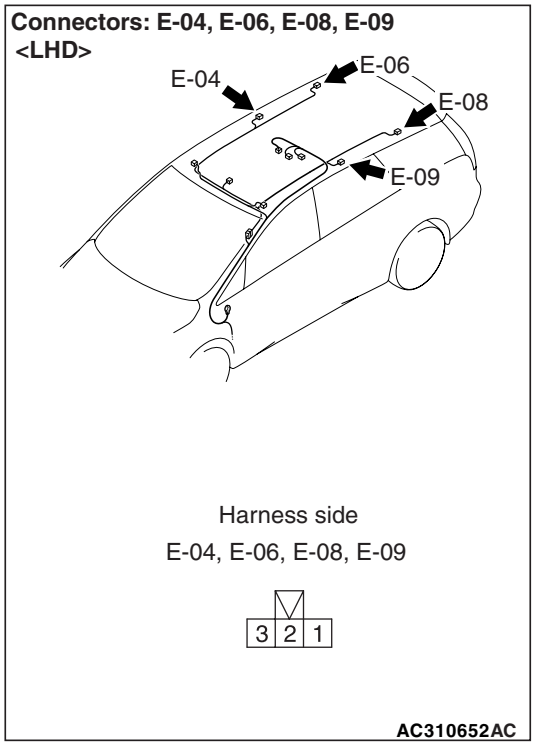

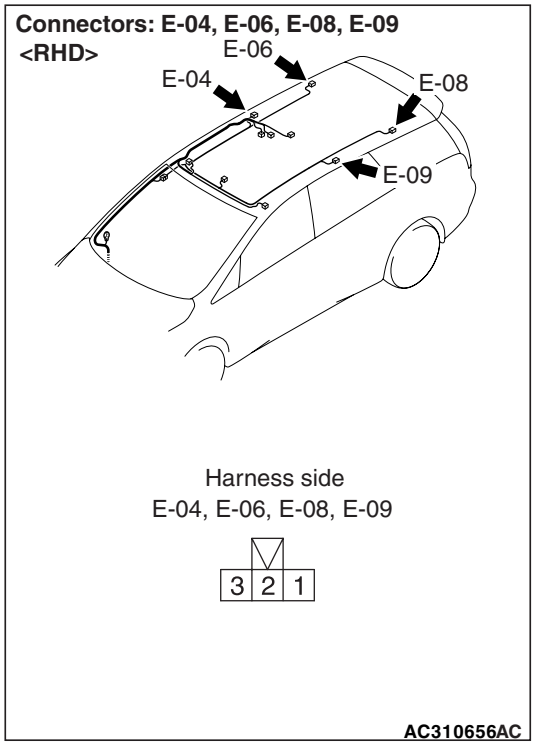

Main Index
Group TOC

NOTE:

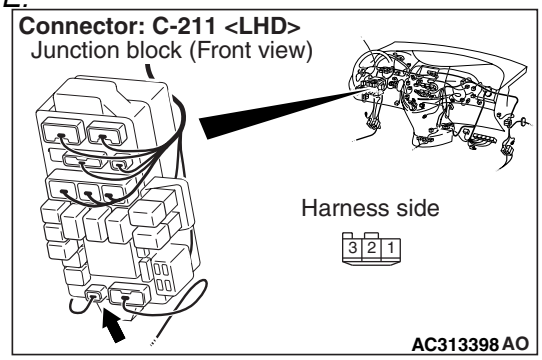

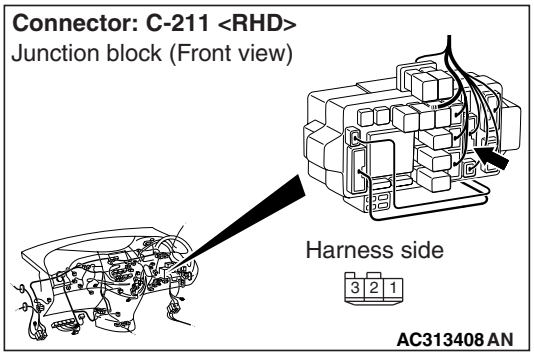

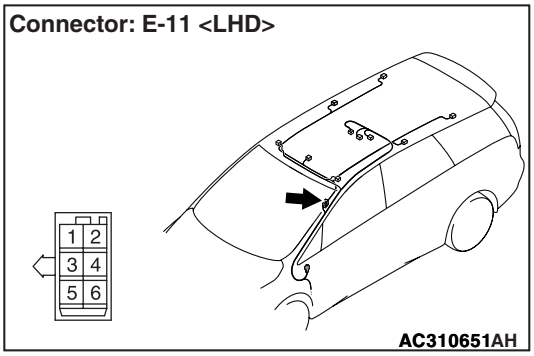

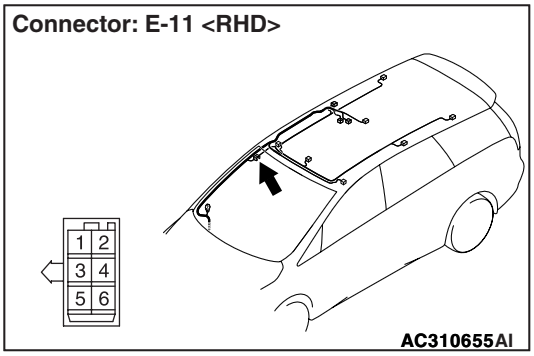

Prior to the wiring harness inspection, check intermediate connector E-11 and junction block connector C-211, and repair if necessary.

- Check the earth wires for open circuit.

Q: Is the check result normal?

YES : . Replace the rear personal lamp.

NO : . Repair the wiring harness.

Main Index
Group TOC

Inspection Procedure O-3: The rear personal lamp does not illuminate normally. <Vehicles without keyless entry system>

⚠ CAUTION

Whenever the ECU is replaced, ensure that the input and output signal circuits are normal.

Room Lamp and Rear Personal Lamp Circuit

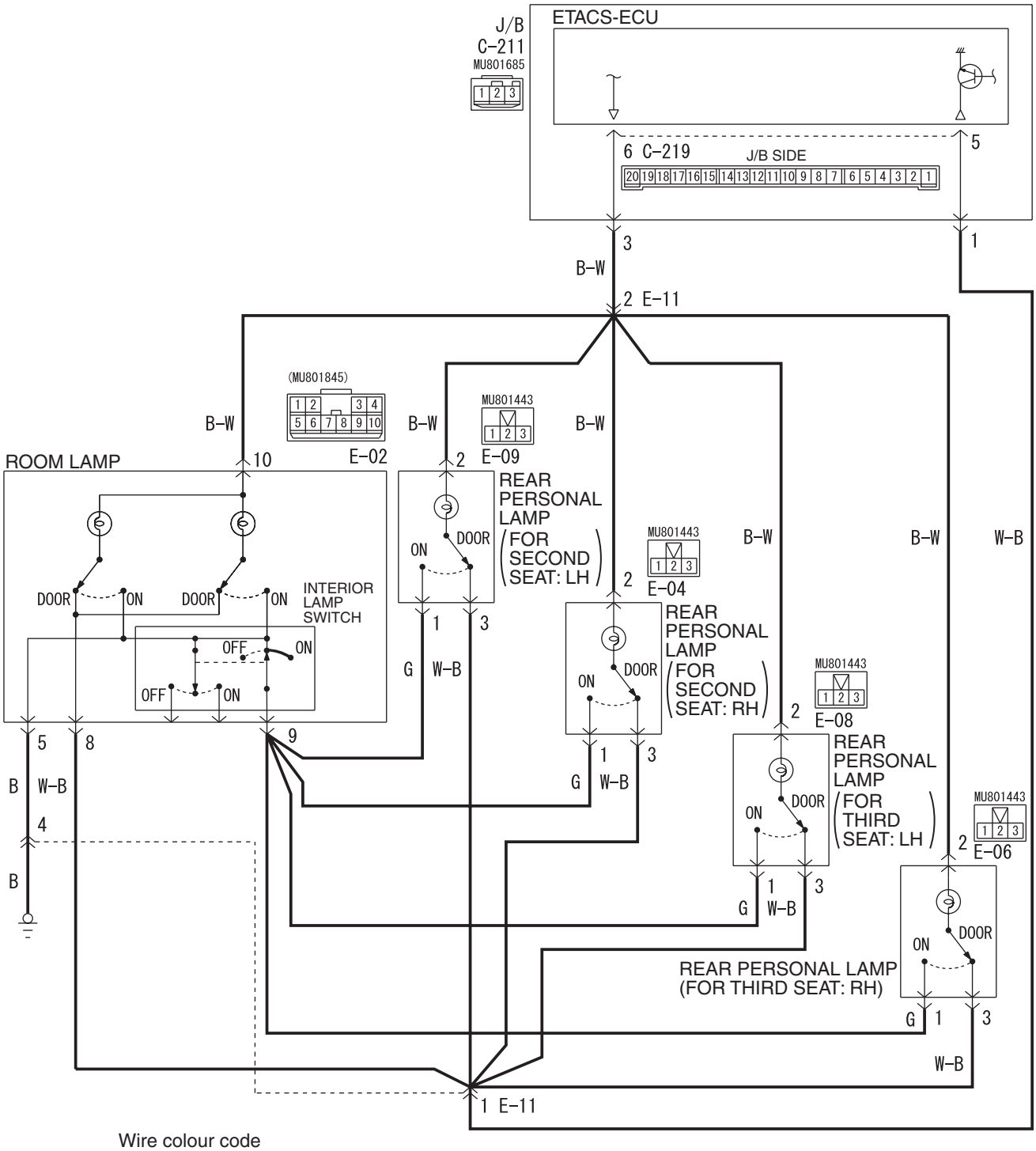

Wire colour code
B : Black LG : Light green G : Green L : Blue W : White Y : Yellow SB : Sky blue
BR : Brown O : Orange GR : Gray R : Red P : Pink V : Violet

W4X54E036A

Main Index
Group TOC

COMMENTS ON TROUBLE SYMPTOM

If the rear personal lamps do not illuminate or extinguish normally, wiring harness connector(s) or the bulb may be defective.

POSSIBLE CAUSES

- Malfunction of the interior lamp switches
- Malfunction of the rear personal lamp bulbs
- Damaged harness wires and connectors

DIAGNOSTIC PROCEDURE

Step 1. SWS monitor data list

<Selected item> ETACS ECU

- Driver's door is open

Item No.	Item name	Normal condition
Item 32	DR DOOR SW	ON

OK: Normal condition is displayed.

Q: Is the check result normal?

YES : Go to Step 2.

NO : Refer to inspection procedure P-5 "The driver's door switch signal is not received <LH drive vehicles>P.54C-346 or <RH drive vehicles>P.54C-348 ."

Step 2. ETACS switch data by using the SWS monitor

Check the ETACS-ECU signal related to the rear personal lamp illumination.

- Ignition switch: OFF (key inserted)

Item No.	Item name	Normal condition
Item 03	Key reminder switch	OFF

- Passenger's door: Close → Open

Item No.	Item name	Normal condition
Item 05	Passenger's door switch	from OFF to ON

- Tailgate: Close → Open

Item No.	Item name	Normal condition
Item 07	Trunk or lift gate switch	from OFF to ON

- Rear door (RH): Close → Open

Item No.	Item name	Normal condition
Item 41	Rear door (right side) switch	from OFF to ON

- Rear door (LH): Close → Open

Item No.	Item name	Normal condition
Item 42	Rear door (left side) switch	from OFF to ON

- Driver's door: Unlock → Lock

Item No.	Item name	Normal condition
Item 21	Dr door lock actuator lock SW	from OFF to ON
Item 22	Dr door lock actuator unlock SW	from ON to OFF

OK: Normal conditions displayed for all the items.

Main Index
Group TOC

Q: Is the check result normal?

Normal conditions are displayed for all the items. : Go to Step 3.

Normal condition is not displayed for item No.03 : Refer to inspection procedure P-10 "The key reminder switch signal is not received P.54C-364."

Normal condition is not displayed for item No.05, 07, 41or 42 : Refer to inspection procedure P-12 "All the door switch signals are not received P.54C-373."

Normal condition is not displayed for item No.21 and 22 : Refer to inspection procedure P-13 "The driver's door lock actuator switch signal is not received <LH drive vehicles>P.54C-379 or <RH drive vehicles>P.54C-383 ."

Step 3. Pulse check

Check the input signals below, which are related to the rear personal lamps.

System switch	Check condition
Interior lamp ON switch	When turned from OFF to ON
Interior lamp OFF switch	When turned from ON to OFF

OK: The M.U.T.-III sounds or the voltmeter needle fluctuates.

Q: Is the check result normal?

YES : Go to Step 4.

NO : Refer to inspection procedure P-20 "The interior lamp "all on" or "all off" switch signal is not sent to the ETACS-ECU P.54C-415."

Step 4. Retest the system.

Check which lamp does not illuminate when the lamp switches are operated.

Q: Which lamp does not illuminate?

No lamps illuminate : Go to Step 5.

One of the second seat lamps (RH or LH) or the third seat lamps (RH or LH) does not illuminate. : Go to Step 9.

Step 5. Check the rear personal lamp switches.

Check which position (ON or DOOR) of the rear personal lamp switch does not activate the relevant lamp.

Q: Which switch position does not activate the lamp?

The lamp illuminates at neither the ON nor DOOR position. : Go to Step 6.

The lamp does not illuminate at the DOOR position. : Go to Step 8.

The lamp does not illuminate at the ON position. : Replace the rear personal lamp.

Main Index
Group TOC

Step 6. Connector check: C-219 ETACS-ECU connector, E-09 rear personal lamp connector

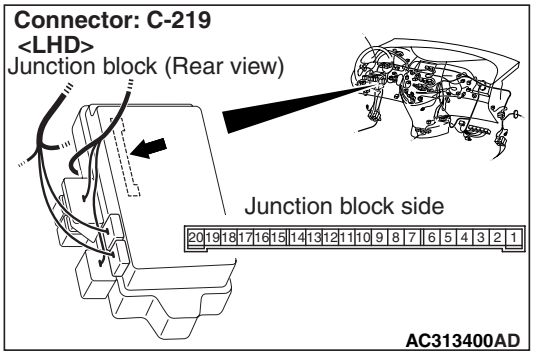

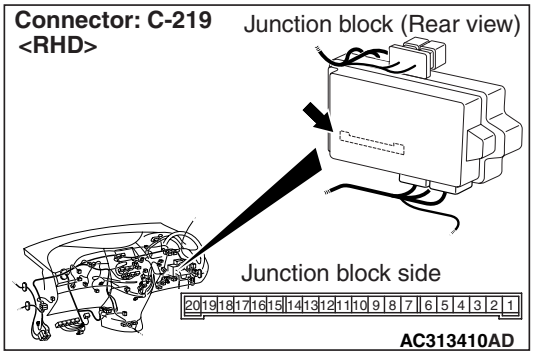

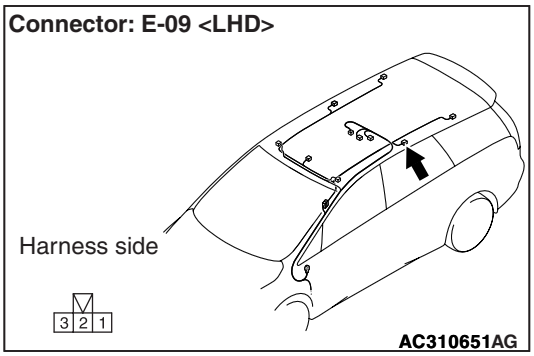

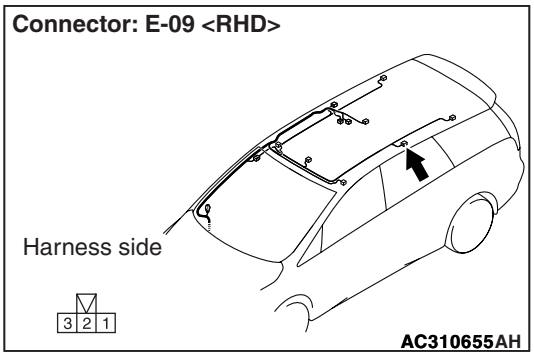

Q: Is the check result normal?

YES : Go to Step 7.

NO : Repair the defective connector.

Step 7. Check the wiring harness from C-219 ETACS-ECU connector terminal No.6 to E-09 rear personal lamp connector terminal No.2.

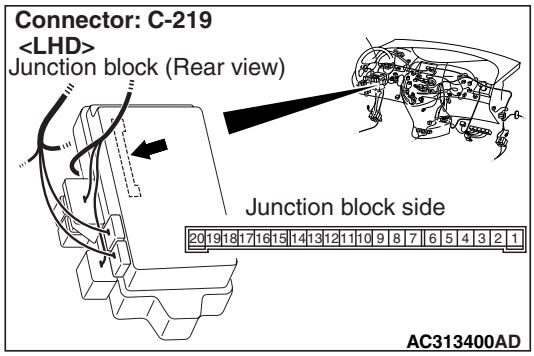

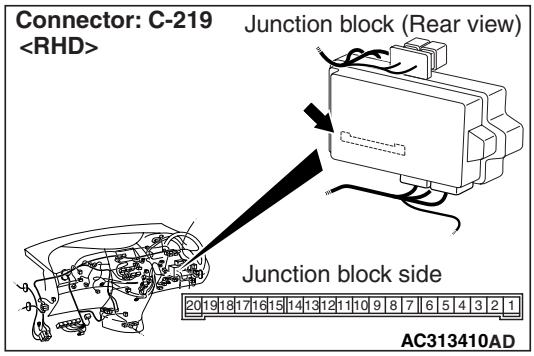

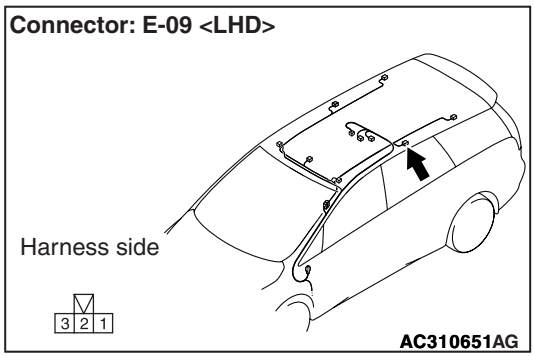

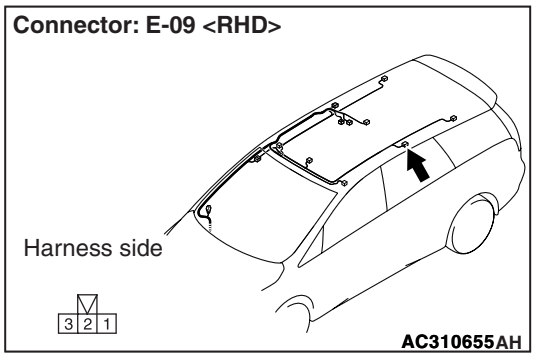

Main Index
Group TOC

NOTE:

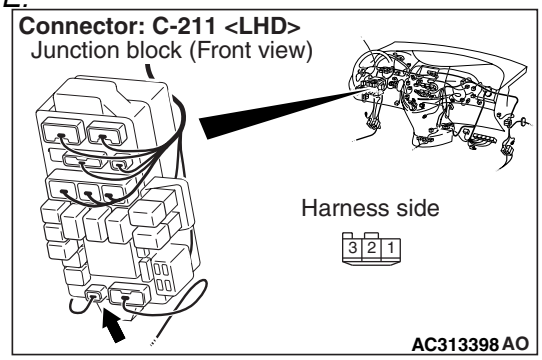

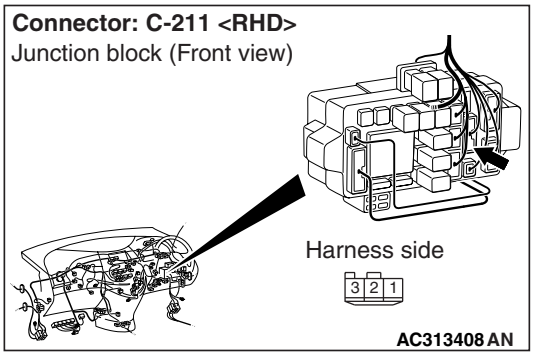

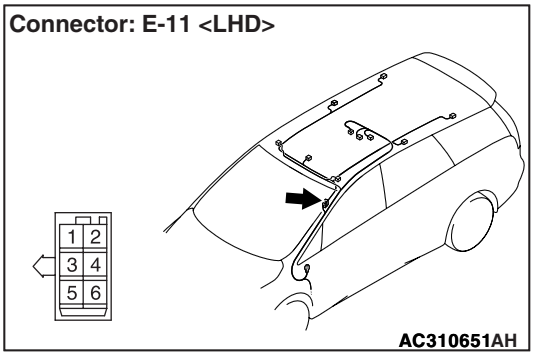

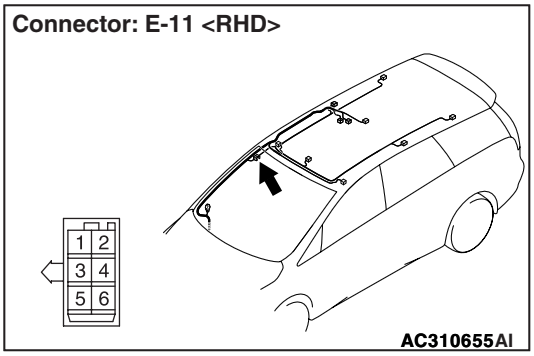

Prior to the wiring harness inspection, check intermediate connector E-11 and junction block connector C-211, and repair if necessary.

- Check the earth wires for open circuit.

Q: Is the check result normal?

YES : Replace the rear personal lamp.

NO : Repair the wiring harness.

Step 8. Check the wiring harness from C-219 ETACS-ECU connector terminal No.5 to E-09 rear personal lamp connector terminal No.3.

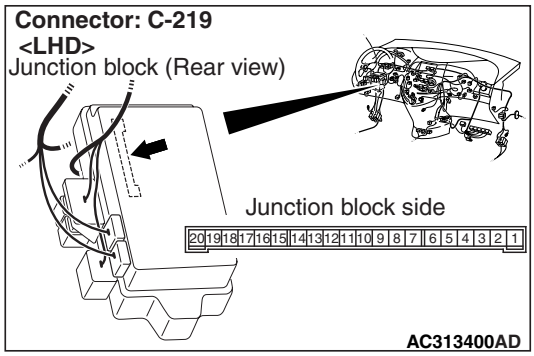

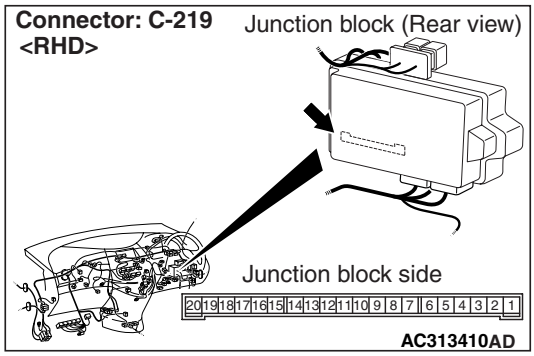

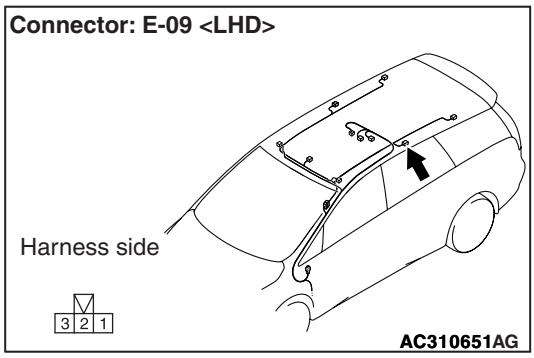

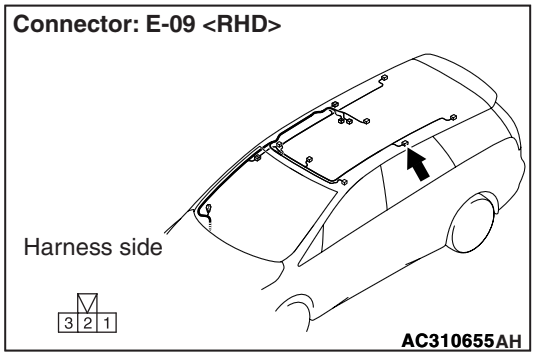

Main Index
Group TOC

NOTE:

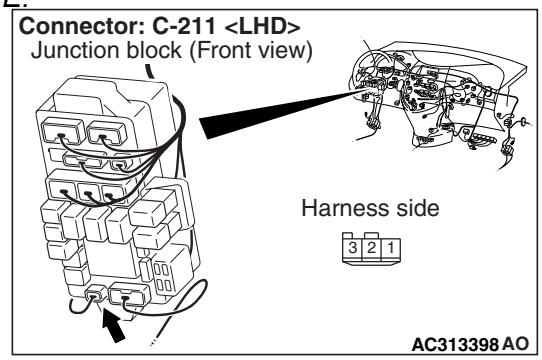

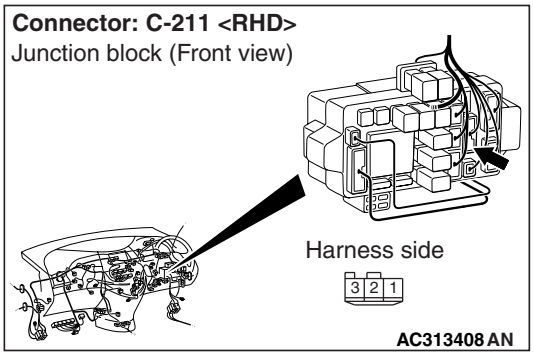

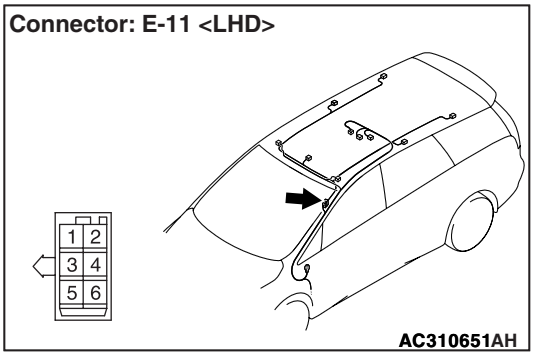

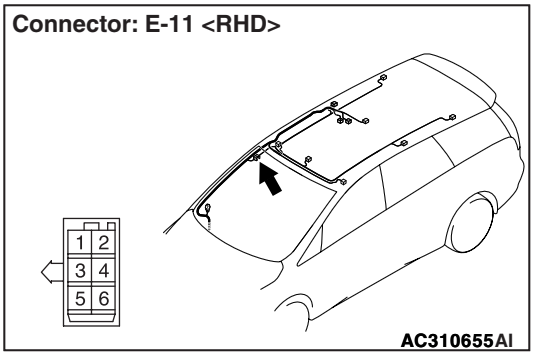

Prior to the wiring harness inspection, check intermediate connector E-11 and junction block connector C-211, and repair if necessary.

- Check the earth wires for open circuit.

Q: Is the check result normal?

YES : Replace the rear personal lamp.

NO : Repair the wiring harness.

Step 9. Connector check: E-09 rear personal lamp connector (for second seat: LH), E-04 rear personal lamp connector (for second seat: RH), E-08 rear personal lamp connector (for third seat: LH), E-06 rear personal lamp connector (for third seat: RH)

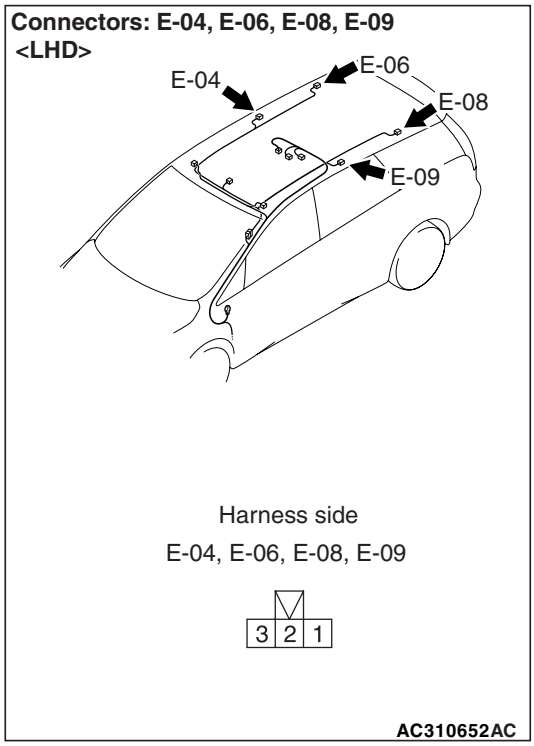

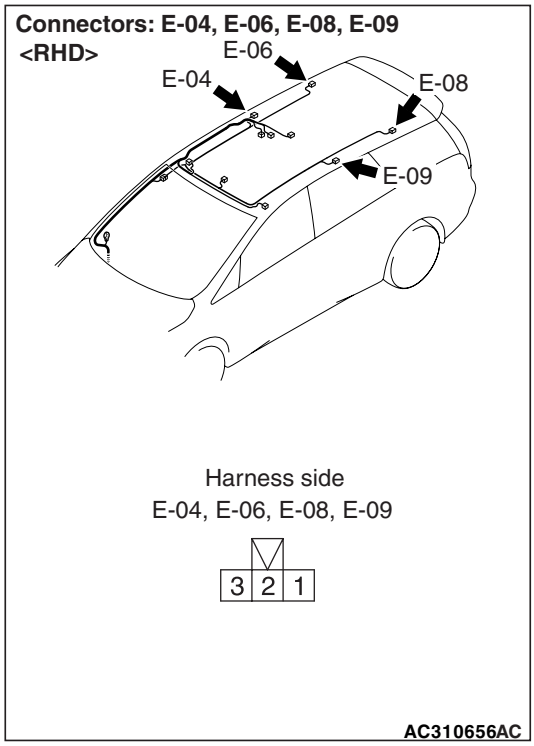

Q: Is the check result normal?

YES : Go to Step 10.

NO : Repair the defective connector.

Main Index
Group TOC

Step 10. Check the bulbs of the rear personal lamp.

Check that the rear personal lamp bulbs are not burned out.

Q: Is the check result normal?

YES : Go to Step 11.

NO : Replace the rear personal lamp bulb.

Step 11. Check the rear personal lamp switches.

Check which switch position (ON or DOOR) does not activate the rear personal lamp.

Q: Which switch position does not activate the lamp?

The lamp illuminates at neither the ON nor DOOR position. : Go to Step 12.

The lamp does not illuminate at the DOOR position. : Go to Step 13.

The lamp does not illuminate at the ON position. : Go to Step 15.

Step 12. Check the wiring harness from C-219 ETACS-ECU connector terminal No.6 to E-09 rear personal lamp (for second seat: RH) connector terminal No.2, E-04 rear personal lamp (for second seat: LH) connector terminal No.2, E-08 rear personal lamp (for third seat: LH) connector terminal No.2, E-06 rear personal lamp (for third seat: RH) connector terminal No.2.

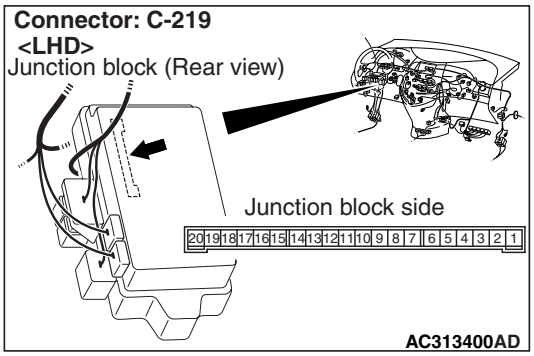

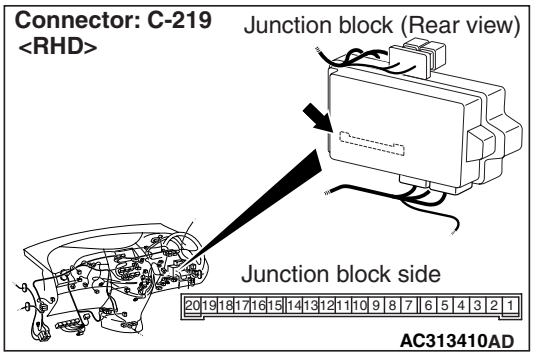

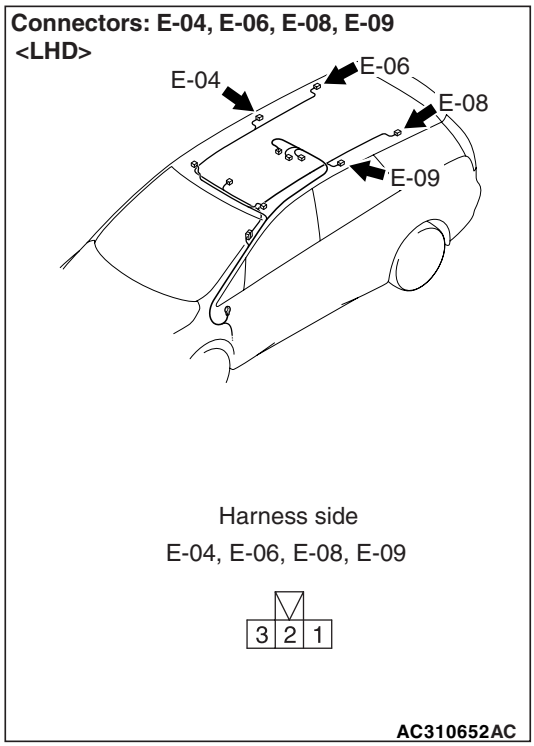

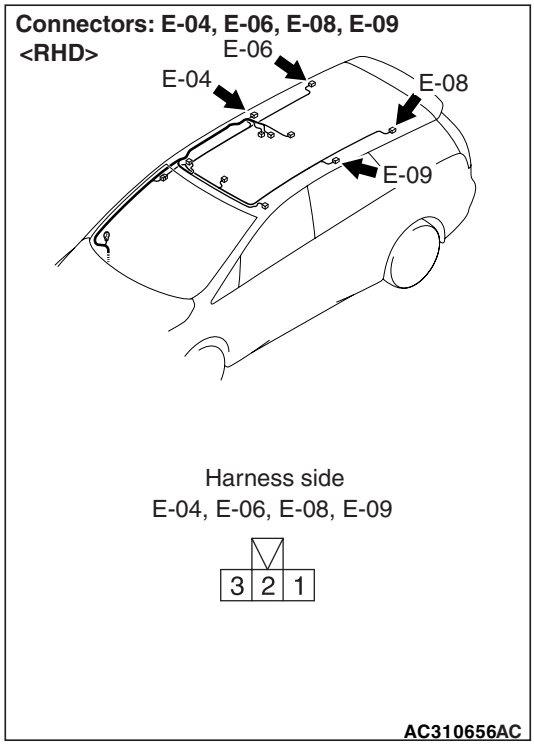

NOTE:

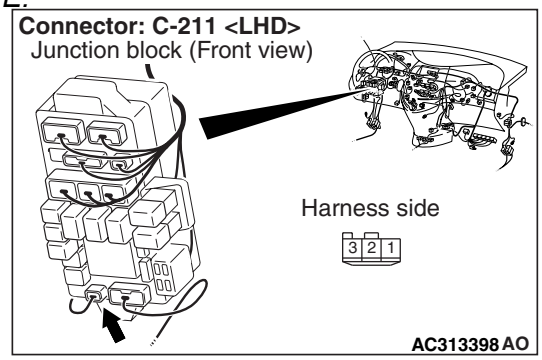

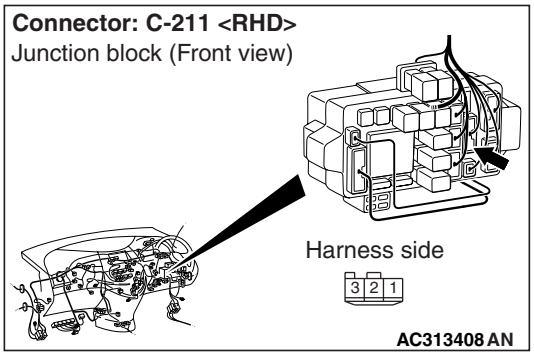

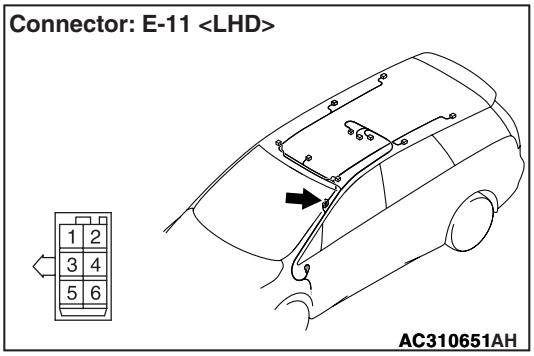

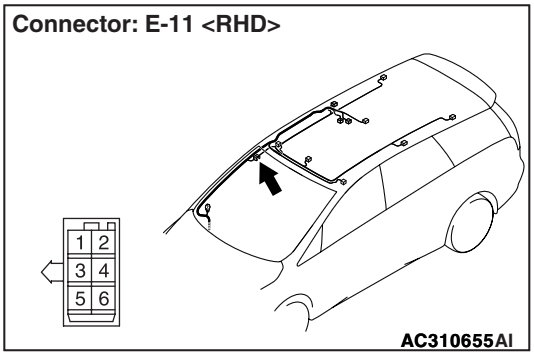

Prior to the wiring harness inspection, check intermediate connector E-11 and junction block connector C-211, and repair if necessary.

- Check the power supply line for open circuit.

Q: Is the check result normal?

YES : Replace the rear personal lamp.

NO : Repair the wiring harness.

Step 13. Connector check: E-02 room lamp connector

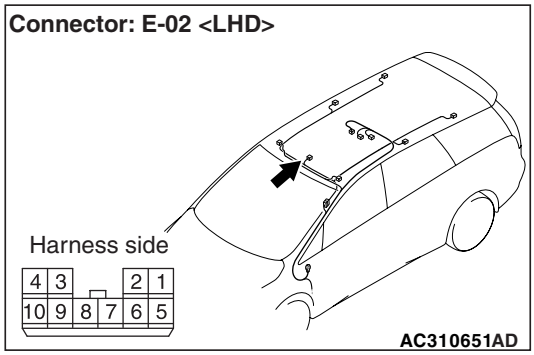

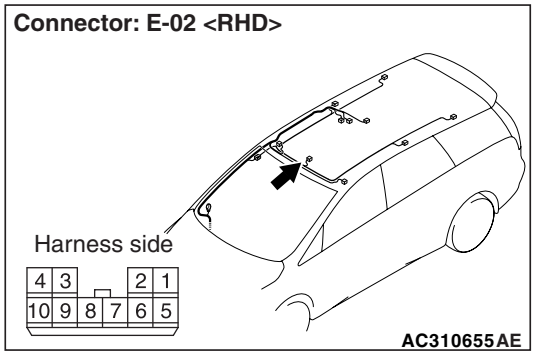

Q: Is the check result normal?

YES : Go to Step 14.

NO : Repair the defective connector.

Main Index
Group TOC

Step 14. Check the wiring harness from E-02 room lamp connector terminal No.9 to E-09 rear personal lamp (for second seat: RH) connector terminal No.1, E-04 rear personal lamp (for second seat: LH) connector terminal No.1, E-08 rear personal lamp (for third seat: LH) connector terminal No.1, E-06 rear personal lamp (for third seat: RH) connector terminal No.1.

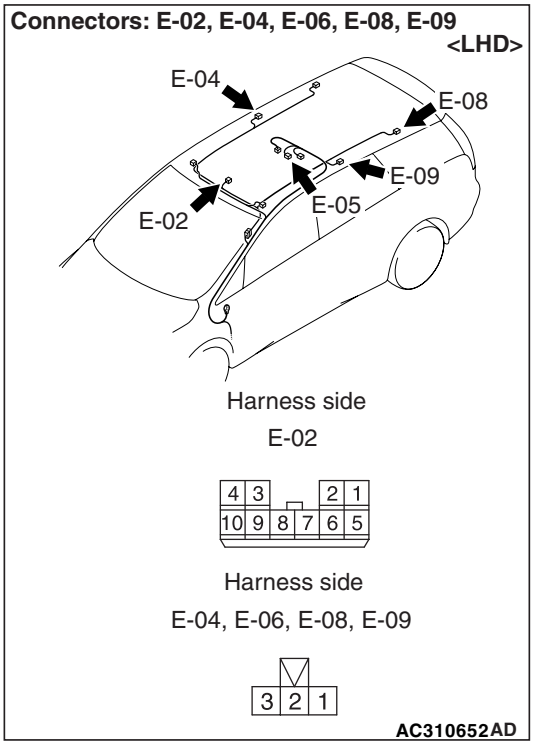

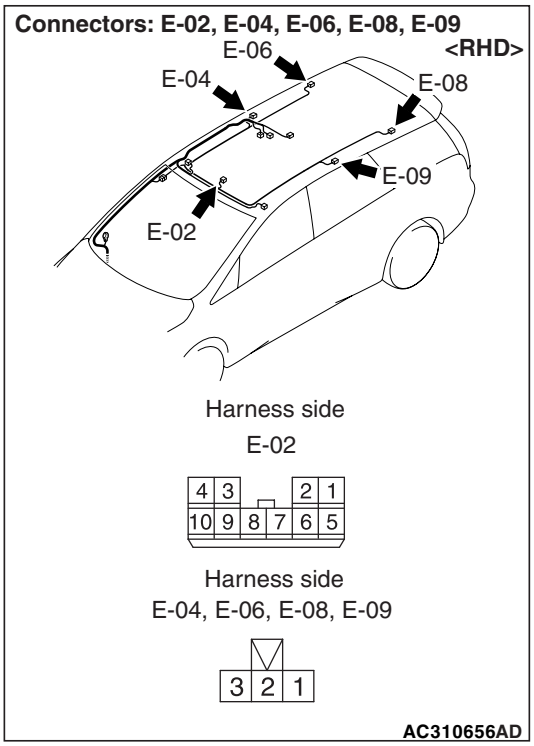

- Check the earth wires for open circuit.

Q: Is the check result normal?
YES : Replace the rear personal lamp.
NO : Repair the wiring harness.

Step 15. Check the wiring harness from C-219 ETACS-ECU connector terminal No.5 to E-09 rear personal lamp (for second seat: RH) connector terminal No.3, E-04 rear personal lamp (for second seat: LH) connector terminal No.3, E-08 rear personal lamp (for third seat: LH) connector terminal No.3, E-06 rear personal lamp (for third seat: RH) connector terminal No.3.

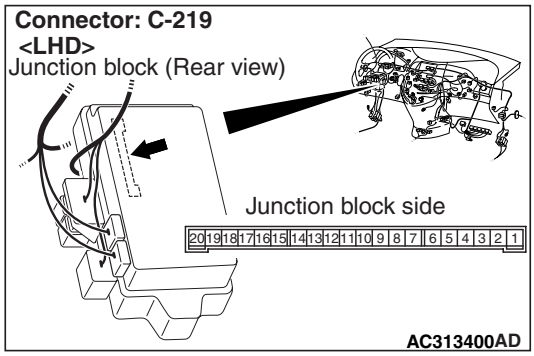

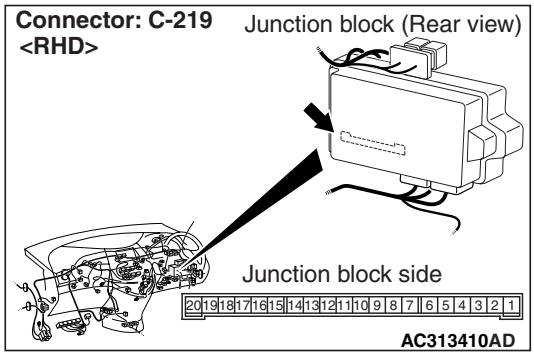

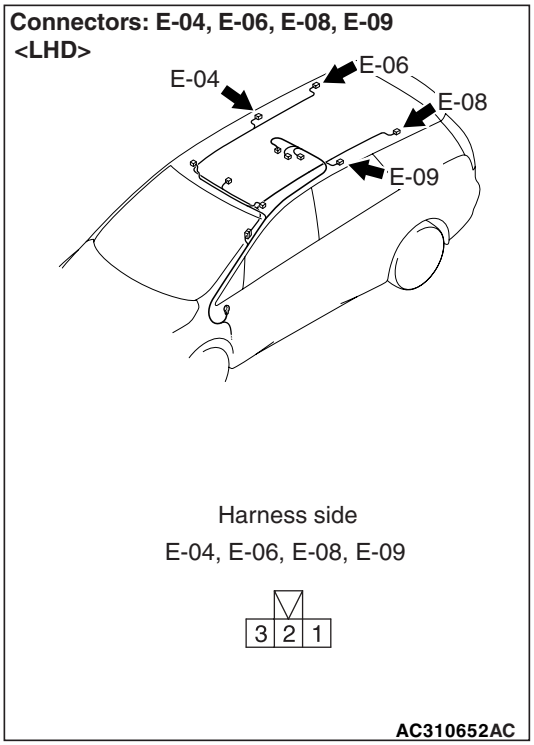

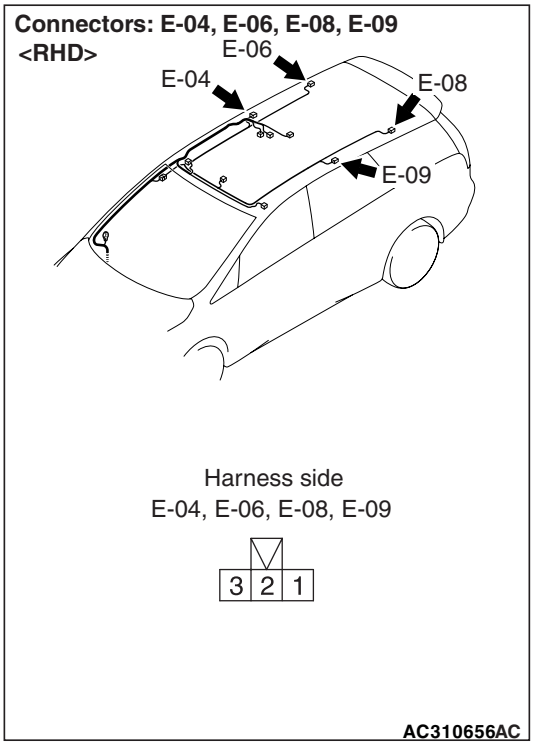

NOTE:

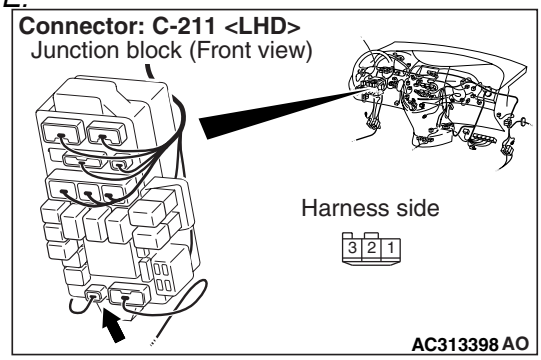

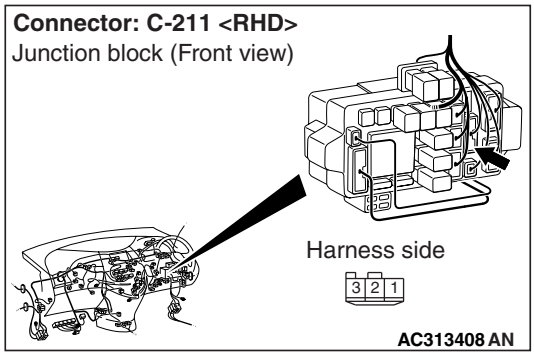

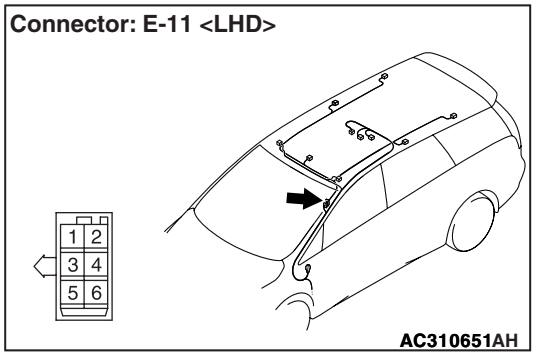

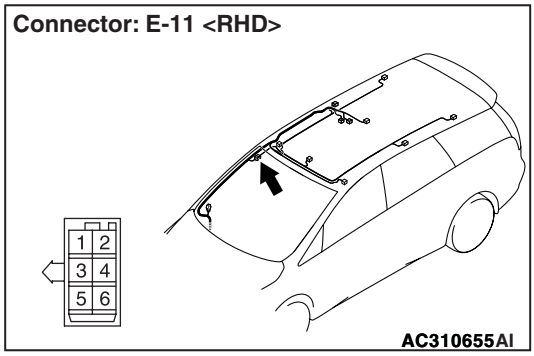

Prior to the wiring harness inspection, check intermediate connector E-11 and junction block connector C-211, and repair if necessary.

- Check the earth wires for open circuit.

Q: Is the check result normal?

YES : Replace the rear personal lamp.

NO : Repair the wiring harness.

Main Index
Group TOC

Inspection Procedure O-4: The luggage compartment lamp does not illuminate normally. <Vehicles with keyless entry system>

⚠ CAUTION
Whenever the ECU is replaced, ensure that the input and output signal circuits are normal.

Luggage Room Lamp Circuit

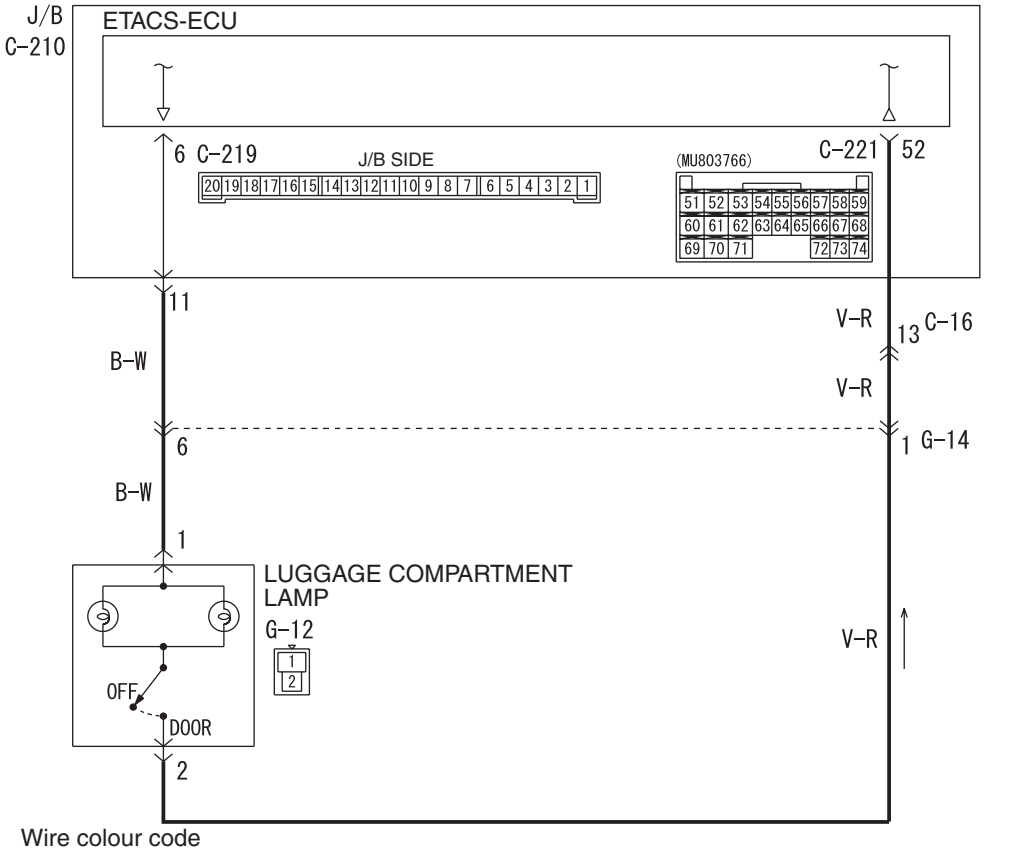

Wire colour code
B : Black LG : Light green G : Green L : Blue W : White Y : Yellow SB : Sky blue
BR : Brown O : Orange GR : Gray R : Red P : Pink V : Violet

W4X54E173A

COMMENTS ON TROUBLE SYMPTOM

If the luggage compartment lamp does not illuminate or extinguish normally, wiring harness connector(s) or the bulb may be defective.

POSSIBLE CAUSES

- Malfunction of the luggage compartment lamp bulbs
- Damaged harness wires and connectors

Main Index
Group TOC

DIAGNOSTIC PROCEDURE

Step 1. SWS monitor data list

<Selected item> ETACS ECU

- Driver's door is open

Item No.	Item name	Normal condition
Item 32	DR DOOR SW	ON

OK: Normal condition is displayed.

Q: Is the check result normal?

YES : Go to Step 2.

NO : Refer to inspection procedure P-5 "The driver's door switch signal is not received <LH drive vehicles>P.54C-346 or <RH drive vehicles>P.54C-348 ."

Step 2. ETACS switch data by using the SWS monitor

Check the ETACS-ECU signals related to the illumination of the luggage compartment lamp.

- Ignition switch: OFF (key inserted)

Item No.	Item name	Normal condition
Item 03	Key reminder switch	OFF

- Passenger's door: Close → Open

Item No.	Item name	Normal condition
Item 05	Passenger's door switch	from OFF to ON

- Tailgate: Close → Open

Item No.	Item name	Normal condition
Item 07	Trunk or lift gate switch	from OFF to ON

- Rear door (RH): Close → Open

Item No.	Item name	Normal condition
Item 41	Rear door (right side) switch	from OFF to ON

- Rear door (LH): Close → Open

Item No.	Item name	Normal condition
Item 42	Rear door (left side) switch	from OFF to ON

- Driver's door: Unlock → Lock

Item No.	Item name	Normal condition
Item 21	Dr door lock actuator lock SW	from OFF to ON
Item 22	Dr door lock actuator unlock SW	from ON to OFF

- Room lamp on switch: ON

Item No.	Item name	Normal condition
Item 31	Room lamp ALL ON switch	ON

- Room lamp off switch: ON

Item No.	Item name	Normal condition
Item 32	Room lamp ALL OFF switch	ON

Main Index
Group TOC

OK: Normal conditions displayed for all the items.

Q: Is the check result normal?

Normal conditions are displayed for all the items. : Go to Step 3.

Normal condition is not displayed for item No.03 : Refer to inspection procedure P-10 "The key reminder switch signal is not received P.54C-364."

Normal condition is not displayed for item No.05, 07, 41or 42 : Refer to inspection procedure P-12 "All the door switch signals are not received P.54C-373."

Normal condition is not displayed for item No.21 and 32 : Refer to inspection procedure P-13 "The driver's door lock actuator switch signal is not received <LH drive vehicles>P.54C-379 or <RH drive vehicles>P.54C-383 ."

Normal condition is not displayed for item No.31or 42 : Refer to inspection procedure P-20 "The interior lamp "all on" or "all off" switch signal is not sent to the ETACS-ECU P.54C-415."

Step 3. Connector check: G-12 luggage compartment lamp connector

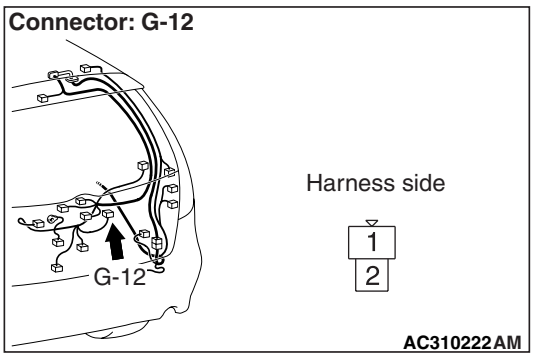

Q: Is the check result normal?

YES : Go to Step 4.

NO : Repair the defective connector.

Step 4. Check the bulbs of the luggage compartment lamp.

Check that the luggage compartment lamp bulbs are not burned out.

Q: Is the check result normal?

YES : Go to Step 5.

NO : Replace the luggage compartment lamp bulb.

Step 5. Connector check: C-221 ETACS-ECU connector

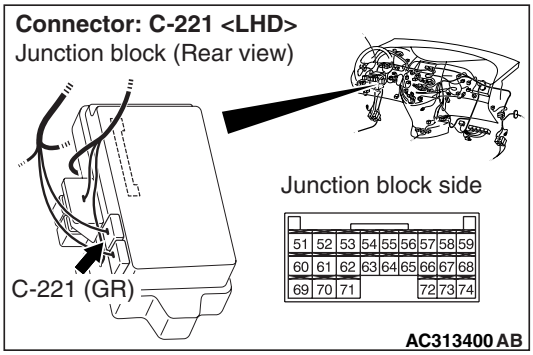

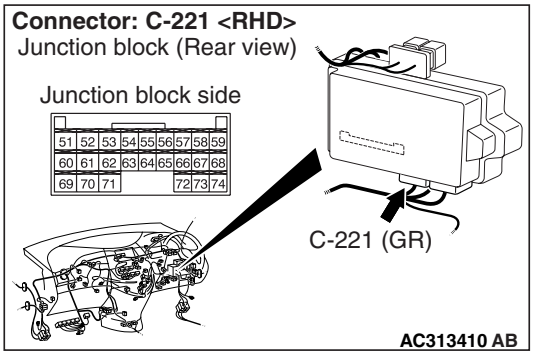

Q: Is the check result normal?

YES : Go to Step 6.

NO : Repair the defective connector.

Step 6. Check the wiring harness from C-221 ETACS-ECU connector terminal No.52 to G-12 luggage compartment lamp connector terminal No.2.

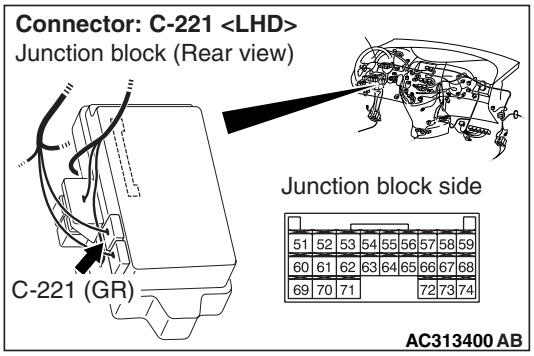

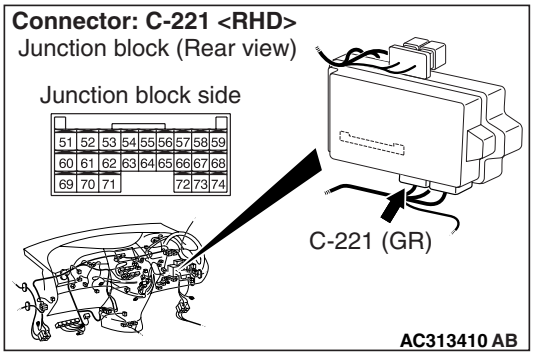

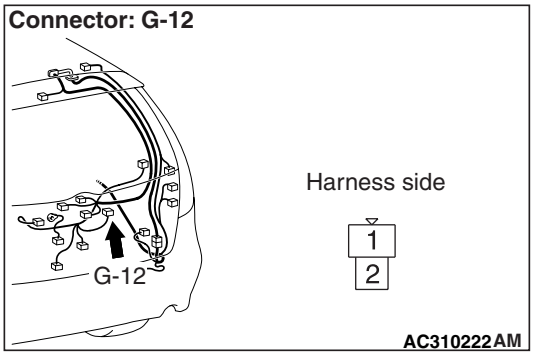

NOTE:

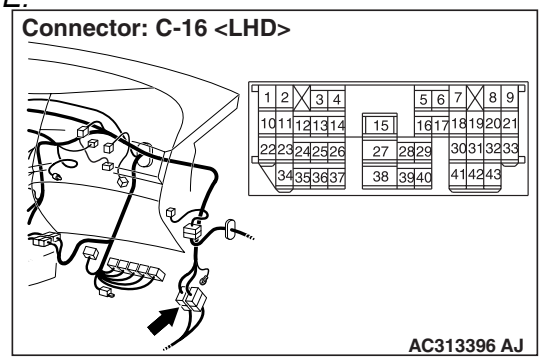

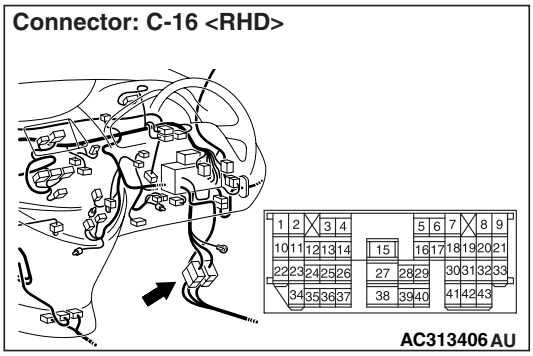

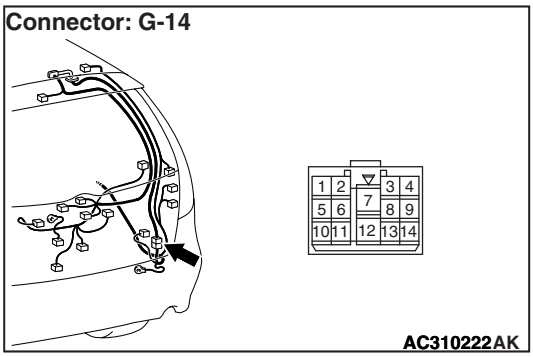

Prior to the wiring harness inspection, check intermediate connector C-16, G-14, and repair if necessary.

- Check the earth wires for open circuit.

Q: Is the check result normal?

YES : Go to Step 7.

NO : Repair the wiring harness.

Main Index
Group TOC

Step 7. Connector check: C-219 ETACS-ECU connector

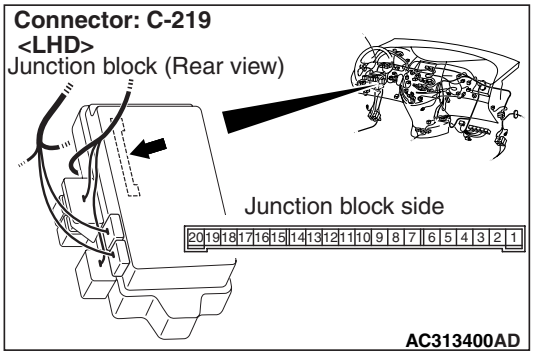

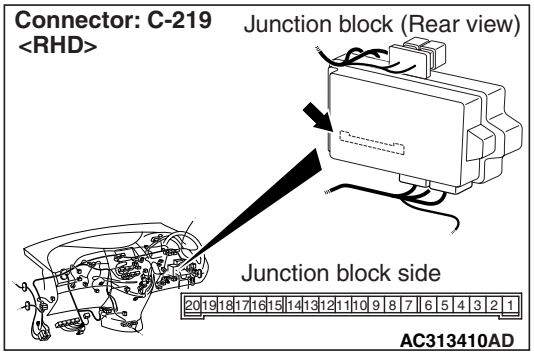

Q: Is the check result normal?

YES : Go to Step 8.

NO : Repair the defective connector.

Step 8. Check the wiring harness from C-219 ETACS-ECU connector terminal No.6 to G-12 luggage compartment lamp connector terminal No.1.

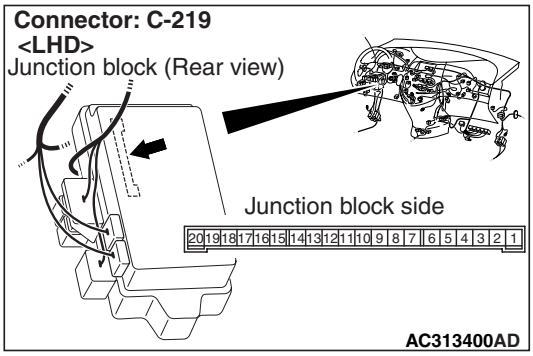

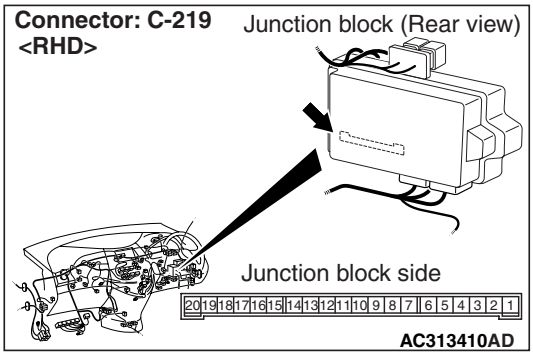

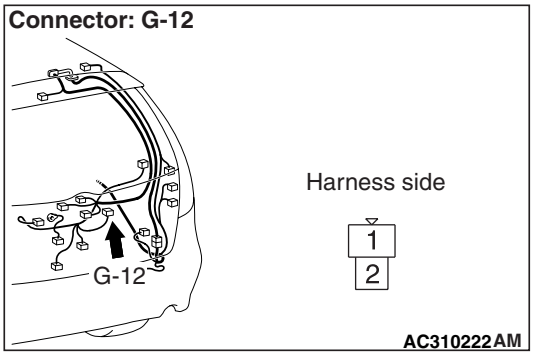

NOTE:

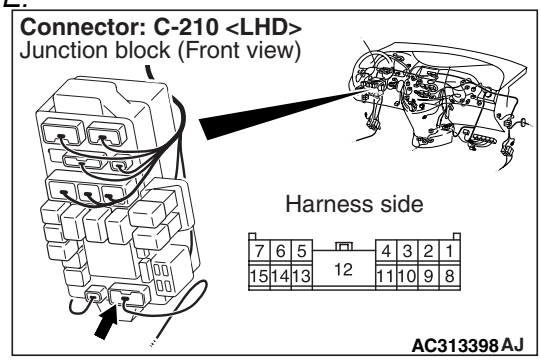

Main Index
Group TOC

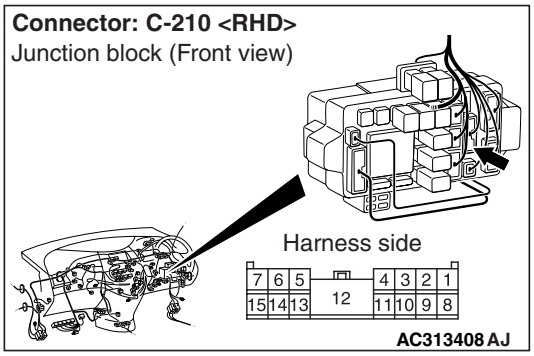

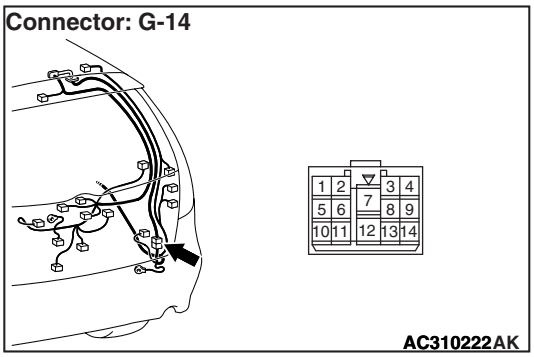

Prior to the wiring harness inspection, check intermediate connector G-14, junction block connector C-210, and repair if necessary.

- Check the power supply line for open circuit.

Q: Is the check result normal?

YES : Go to Step 9.

NO : Repair the wiring harness.

Step 9. Retest the system.

Check that the luggage compartment lamps illuminate and extinguish normally.

Q: Is the check result normal?

YES : The trouble can be an intermittent malfunction (Refer to GROUP 00 – How to Cope with Intermittent Malfunction P.00-5).

NO : Replace the luggage compartment lamp.

Main Index
Group TOC

Inspection Procedure O-4: The luggage compartment lamp does not illuminate normally. <Vehicles without keyless entry system>

⚠ CAUTION
Whenever the ECU is replaced, ensure that the input and output signal circuits are normal.

Luggage Room Lamp Circuit

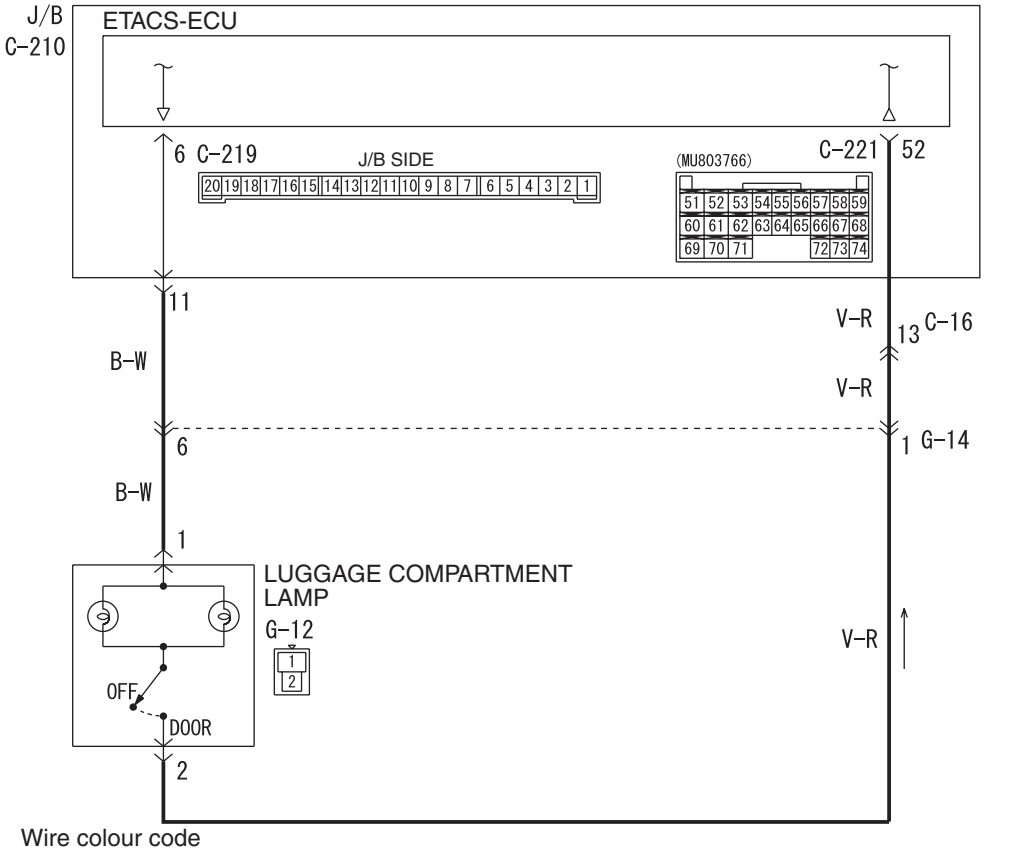

Wire colour code
B : Black LG : Light green G : Green L : Blue W : White Y : Yellow SB : Sky blue
BR : Brown O : Orange GR : Gray R : Red P : Pink V : Violet

W4X54E173A

COMMENTS ON TROUBLE SYMPTOM

If the luggage compartment lamp does not turn on and off normally, wiring harness connector(s) or the bulb may be defective.

POSSIBLE CAUSES

- Malfunction of the luggage compartment lamp bulbs
- Damaged harness wires and connectors

Main Index
Group TOC

DIAGNOSTIC PROCEDURE

Step 1. SWS monitor data list

<Selected item> ETACS ECU

- Driver's door is open

Item No.	Item name	Normal condition
Item 32	DR DOOR SW	ON

OK: Normal condition is displayed.

Q: Is the check result normal?

YES : Go to Step 2.

NO : Refer to inspection procedure P-5 "The driver's door switch signal is not received <LH drive vehicles>P.54C-346 or <RH drive vehicles>P.54C-348 ."

Step 2. ETACS switch data by using the SWS monitor

Check the ETACS-ECU signal related to the rear personal lamp illumination.

- Ignition switch: OFF (key inserted)

Item No.	Item name	Normal condition
Item 03	Key reminder switch	OFF

- Passenger's door: Close → Open

Item No.	Item name	Normal condition
Item 05	Passenger's door switch	from OFF to ON

- Tailgate: Close → Open

Item No.	Item name	Normal condition
Item 07	Trunk or lift gate switch	from OFF to ON

- Rear door (RH): Close → Open

Item No.	Item name	Normal condition
Item 41	Rear door (right side) switch	from OFF to ON

- Rear door (LH): Close → Open

Item No.	Item name	Normal condition
Item 42	Rear door (left side) switch	from OFF to ON

- Driver's door: Unlock → Lock

Item No.	Item name	Normal condition
Item 21	Dr door lock actuator lock SW	from OFF to ON
Item 22	Dr door lock actuator unlock SW	from ON to OFF

OK: Normal conditions displayed for all the items.

Q: Is the check result normal?

Normal conditions are displayed for all the items.

: . Go to Step 3.

Normal condition is not displayed for item No.03 : Refer to inspection procedure P-10 "The key reminder switch signal is not received P.54C-364."

Normal condition is not displayed for item No.05, 07, 41or 42 : Refer to inspection procedure P-12 "All the door switch signals are not received P.54C-373."

Normal condition is not displayed for item No.21 and 22 : Refer to inspection procedure P-13 "The driver's door lock actuator switch signal is not received <LH drive vehicles>P.54C-379 or <RH drive vehicles>P.54C-383 ."

Step 3. Pulse check

Check the input signals below, which is related to the luggage compartment lamp.

System switch	Check condition
Interior lamp ON switch	When turned from OFF to ON
Interior lamp OFF switch	When turned from ON to OFF

OK: The M.U.T.-III sounds or the voltmeter needle fluctuates.

Q: Is the check result normal?

YES : Go to Step 4.

NO : Refer to inspection procedure P-20 "The interior lamp "all on" or "all off" switch signal is not sent to the ETACS-ECU P.54C-415."

Main Index
Group TOC

Step 4. Connector check: G-12 luggage compartment lamp connector

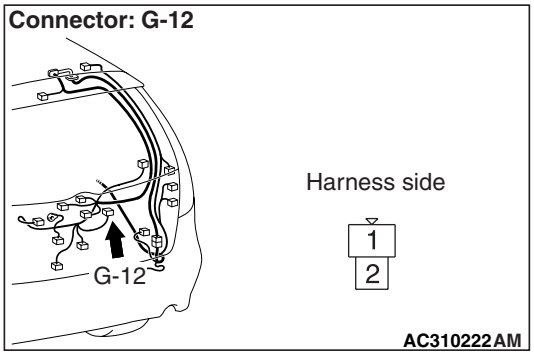

Q: Is the check result normal?
YES : Go to Step 5.
NO : Repair the defective connector.

Step 5. Check the bulbs of the luggage compartment lamp.

Check that the luggage compartment lamp bulbs are not burned out.

Q: Is the check result normal?
YES : Go to Step 6.
NO : Replace the luggage compartment lamp bulb.

Step 6. Connector check: C-221 ETACS-ECU connector

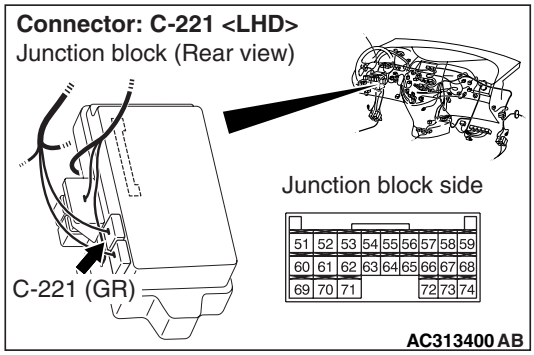

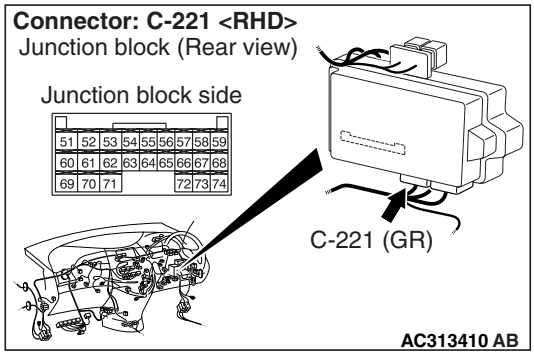

Q: Is the check result normal?
YES : Go to Step 7.
NO : Repair the defective connector.

Step 7. Check the wiring harness from C-221 ETACS-ECU connector terminal No.52 to G-12 luggage compartment lamp connector terminal No.2.

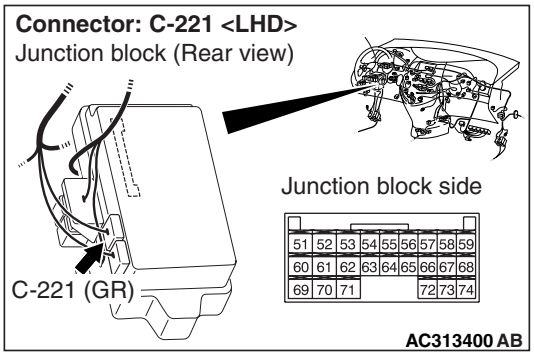

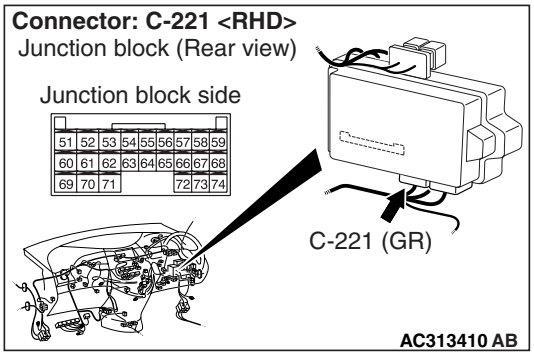

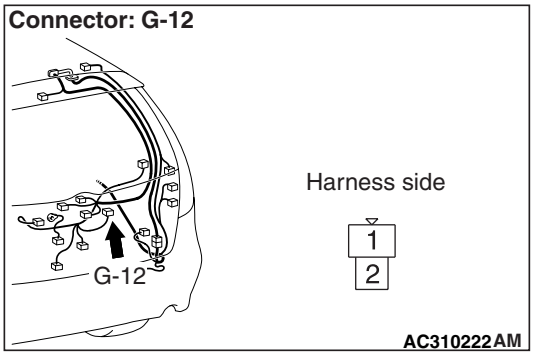

NOTE:

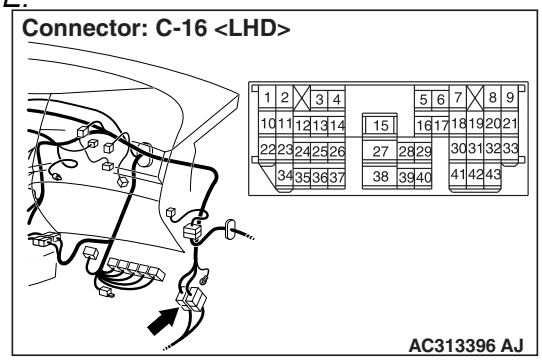

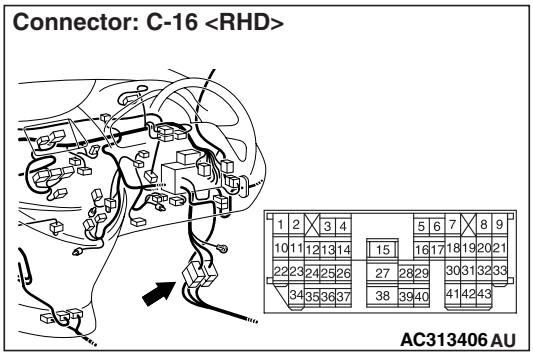

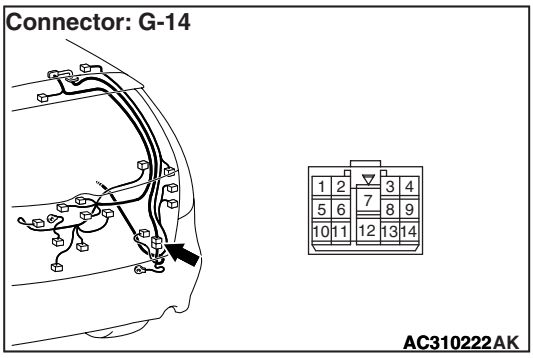

Prior to the wiring harness inspection, check intermediate connector C-16, G-14, and repair if necessary.

- Check the earth wires for open circuit.

Q: Is the check result normal?

YES : Go to Step 8.

NO : Repair the wiring harness.

Main Index
Group TOC

Step 8. Connector check: C-219 ETACS-ECU connector

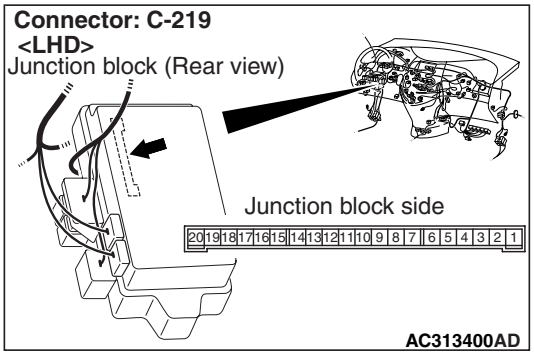

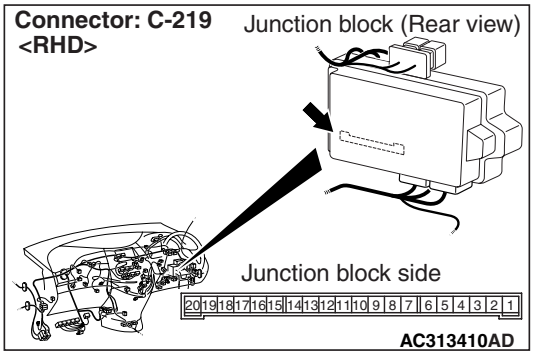

Q: Is the check result normal?

YES : Go to Step 9.

NO : Repair the defective connector.

Step 9. Check the wiring harness from C-219 ETACS-ECU connector terminal No.6 to G-12 luggage compartment lamp connector terminal No.1.

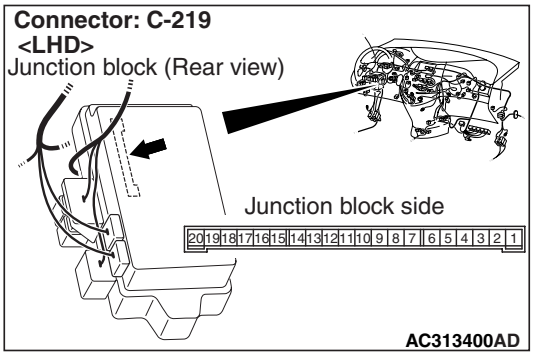

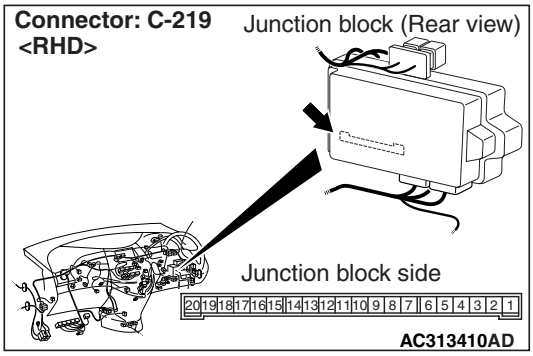

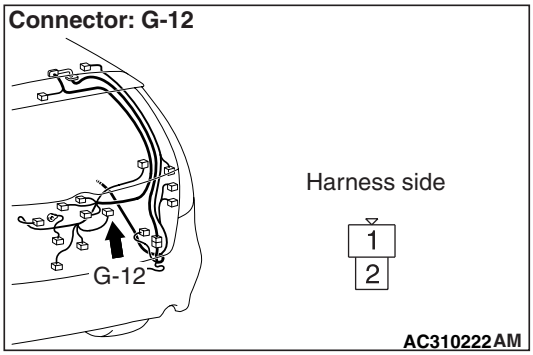

NOTE:

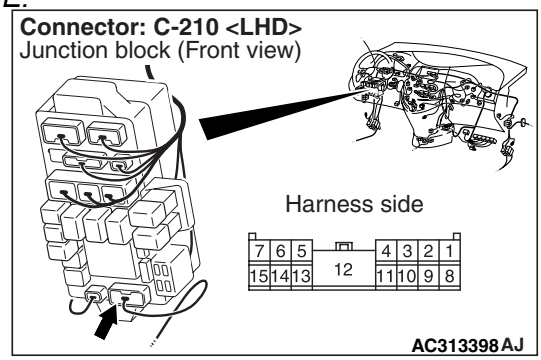

Main Index
Group TOC

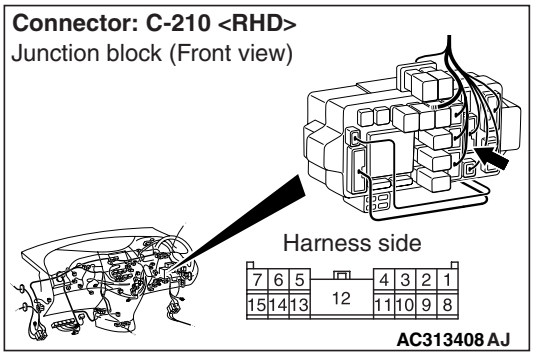

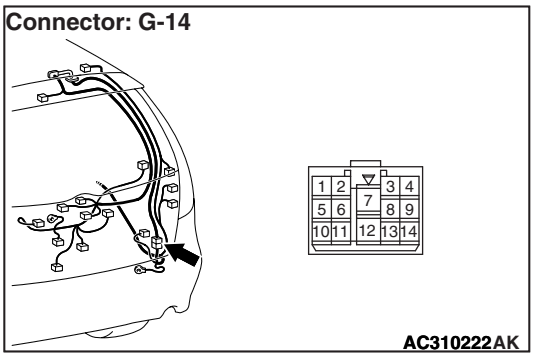

Prior to the wiring harness inspection, check intermediate connector G-14, junction block connector C-210, and repair if necessary.

- Check the power supply line for open circuit.

Q: Is the check result normal?

YES : . Go to Step 10.

NO : . Repair the wiring harness.

Step 10. Retest the system.

Check that the luggage compartment lamp illuminates and extinguishes normally.

Q: Is the check result normal?

YES : The trouble can be an intermittent malfunction (Refer to GROUP 00 – How to Cope with Intermittent Malfunction P.00-5).

NO : Replace the luggage compartment lamp.

Main Index
Group TOC

Inspection Procedure O-5: The door lamp does not illuminate normally.

⚠ CAUTION
Whenever the ECU is replaced, ensure that the input and output signal circuits are normal.

Door Lamp Circuit <LHD>

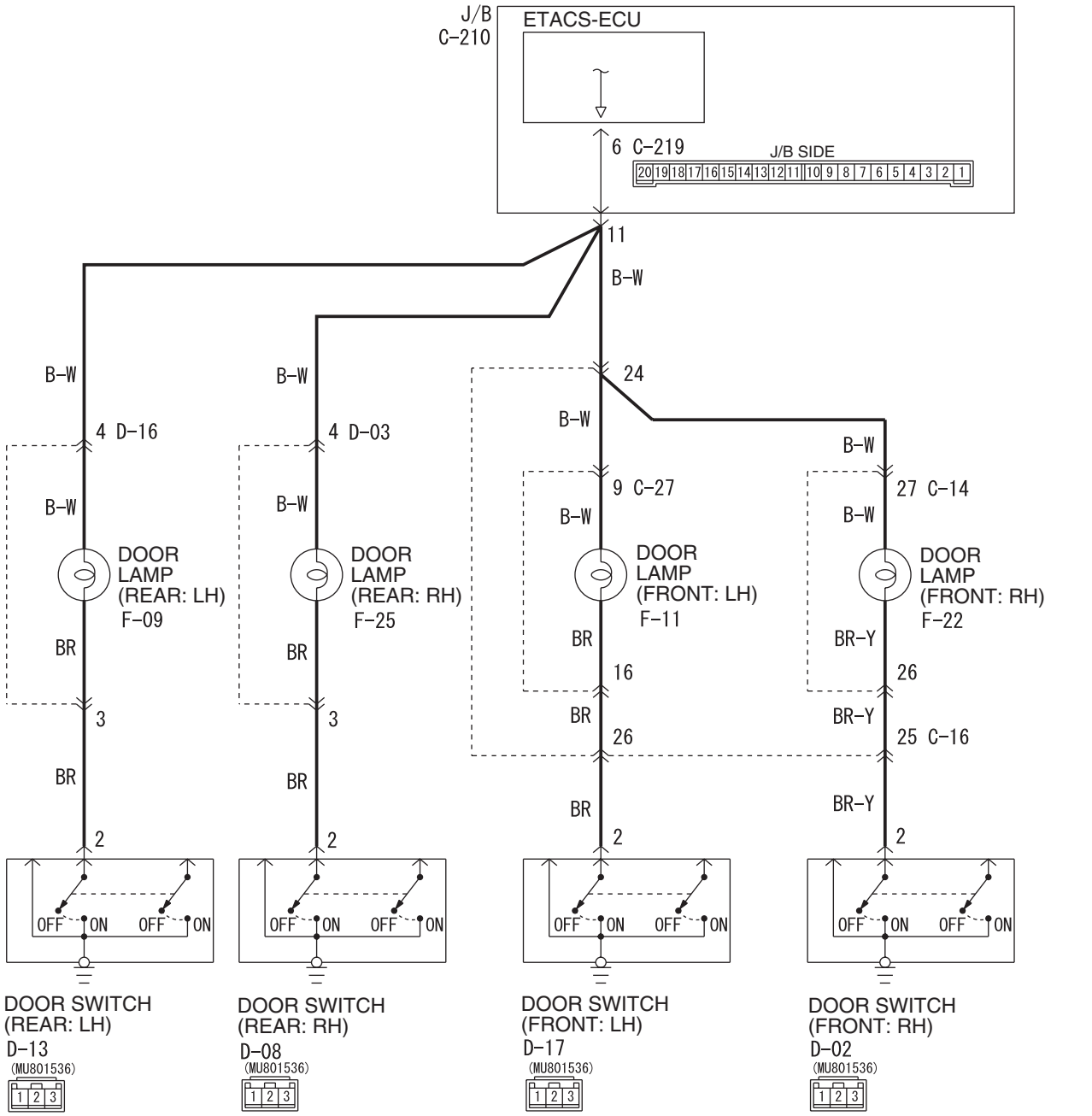

Wire colour code
B : Black LG : Light green G : Green L : Blue W : White Y : Yellow SB : Sky blue
BR : Brown O : Orange GR : Grey R : Red P : Pink V : Violet PU : Purple

W6X54X018A

Door Lamp Circuit <RHD>

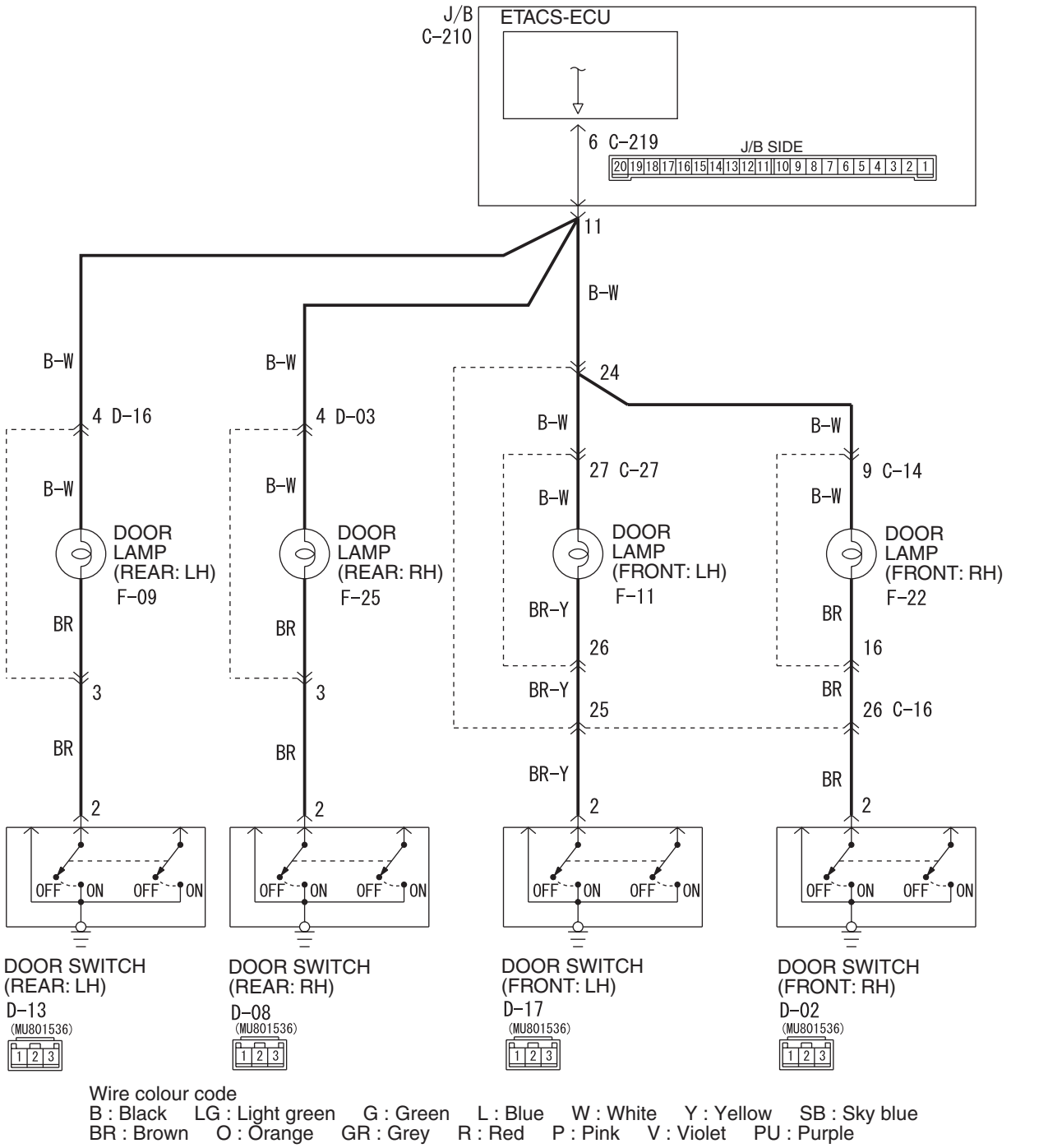

Wire colour code
B : Black LG : Light green G : Green L : Blue W : White Y : Yellow SB : Sky blue
BR : Brown O : Orange GR : Grey R : Red P : Pink V : Violet PU : Purple

W4X54X192A

COMMENTS ON TROUBLE SYMPTOM

The door lamps are energised through the ETACS-ECU. If a door is opened, the relevant door lamp will illuminate.
If this function does not work normally, these input signal circuit(s) or the ETACS-ECU may be defective.

POSSIBLE CAUSES

- Malfunction of the door lamp bulbs
- Malfunction of the door switch
- Malfunction of the ETACS-ECU
- Damaged harness wires and connectors

Main Index
Group TOC

DIAGNOSTIC PROCEDURE

Step 1. Connector check: F-11 door lamp (front: LH), F-22 door lamp (front: RH) connector, F-09 door lamp (rear: LH), F-25 door lamp (rear: RH)

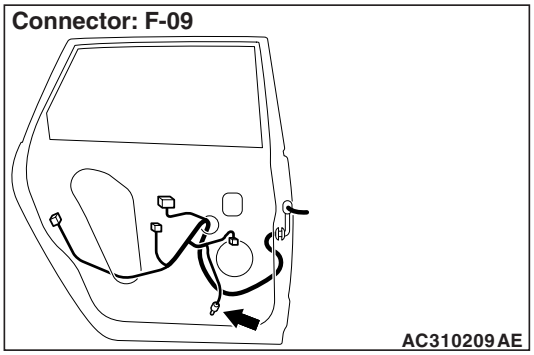

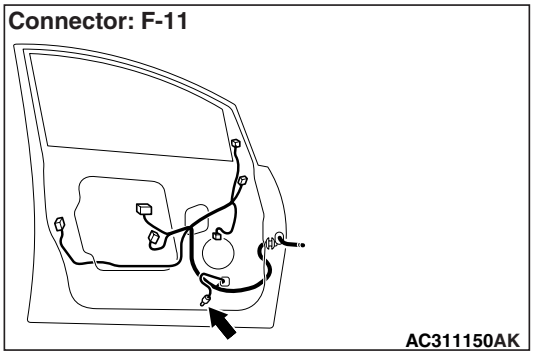

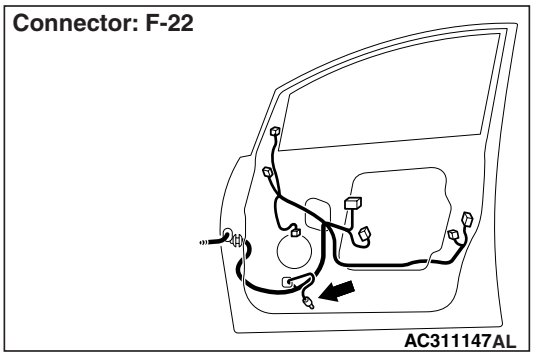

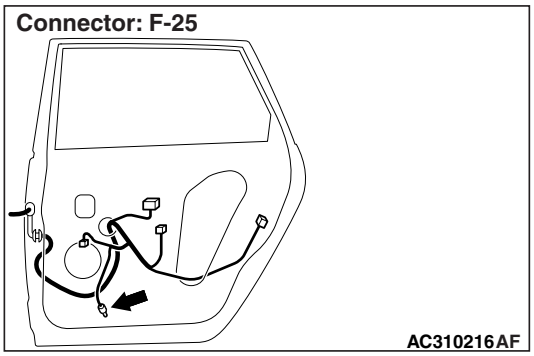

Q: Is the check result normal?
YES : Go to Step 2.
NO : Repair the defective connector.

Step 2. Check the bulbs of the door lamp.
Check that the door lamp bulbs are not burned out.

Q: Is the check result normal?
YES : Go to Step 3.
NO : Replace the door lamp bulb.

Step 3. Connector check: D-17 door switch (front: LH), D-02 door switch (front: RH) connector, D-13 door switch (rear: LH) connector, D-08 door switch (rear: RH) connector

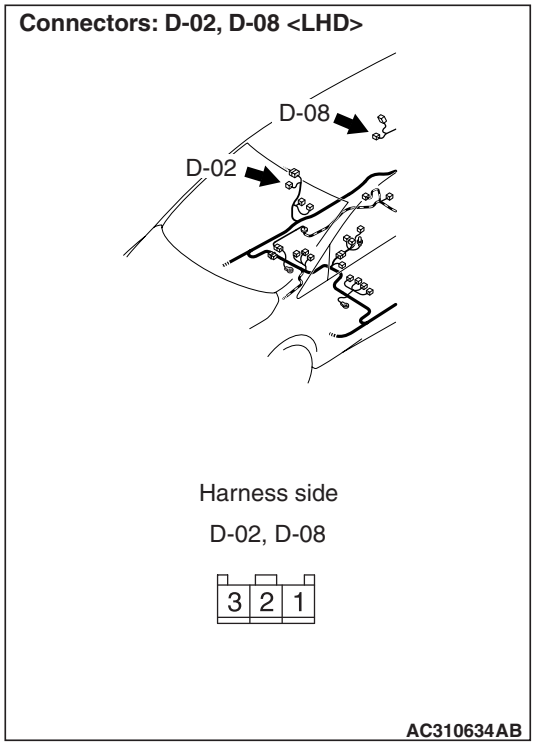

Main Index
Group TOC

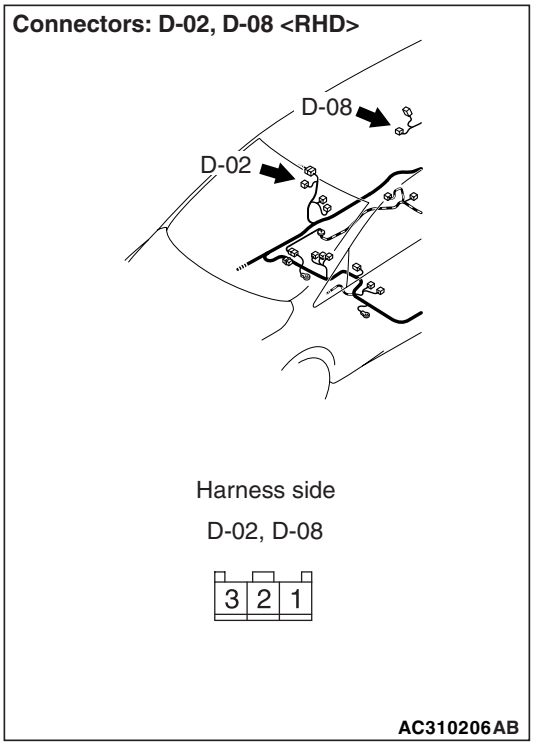

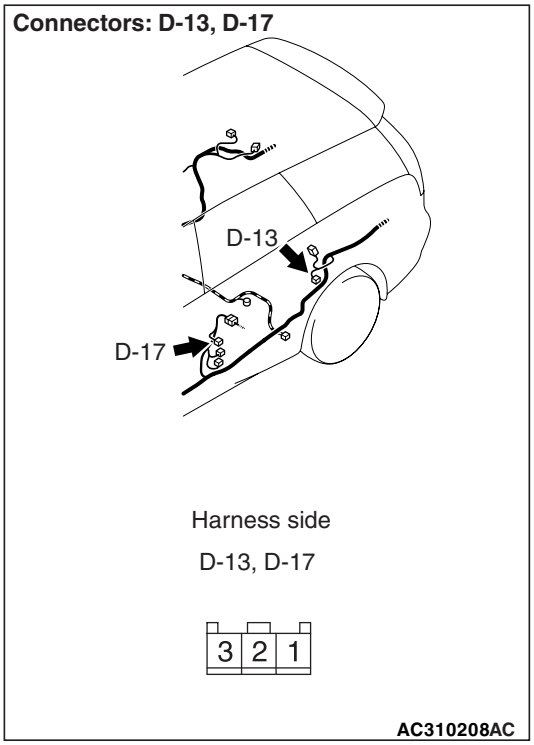

Q: Is the check result normal?
YES : Go to Step 4.
NO : Repair the defective connector.

Step 4. Check the door switch.
Check the door switch, which corresponds to the defective door lamp (Refer to GROUP 42 – Door P.42-36).

Q: Is the check result normal?
YES : Go to Step 5.
NO : Replace the door lamp bulb.

Step 5. Connector check: C-219 ETACS-ECU connector

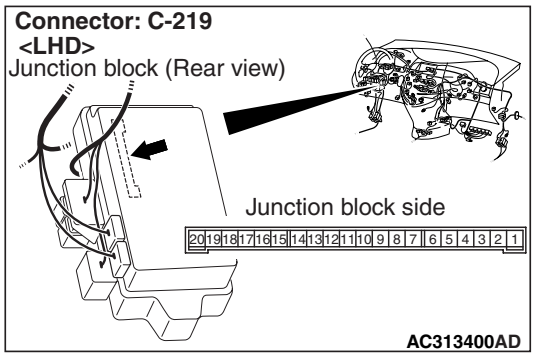

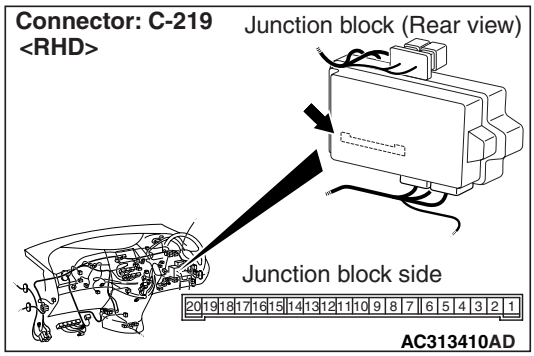

Q: Is the check result normal?
YES : Go to Step 6.
NO : Repair the defective connector.

Main Index
Group TOC

Step 6. Check the wiring harness from C-219 ETACS-ECU connector terminal No.6 to D-17 door switch (front: LH) or D-02 door switch (front: RH) connector, D-13 door switch (rear: LH) connector, D-08 door switch (rear: RH) connector terminal No.2.

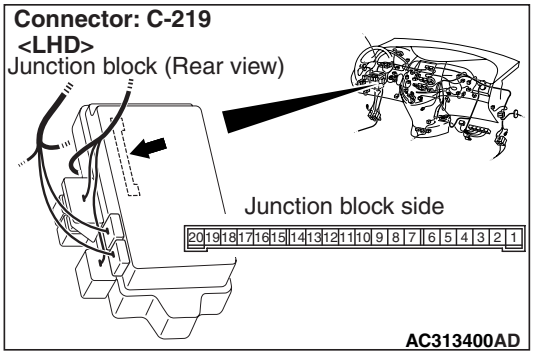

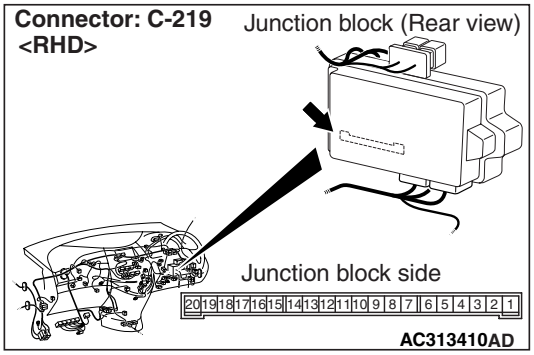

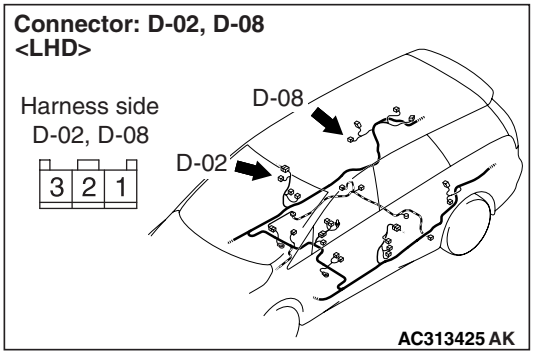

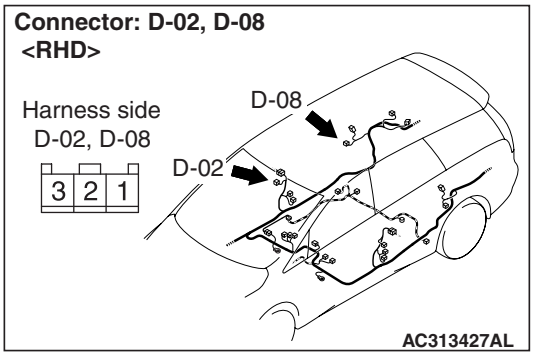

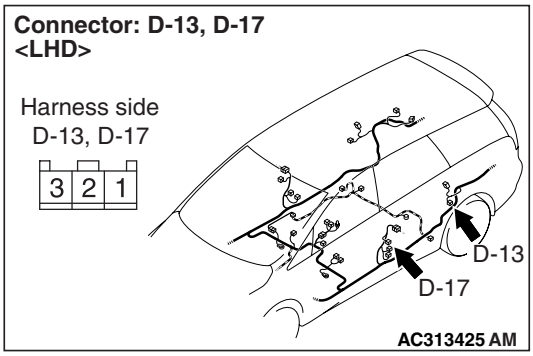

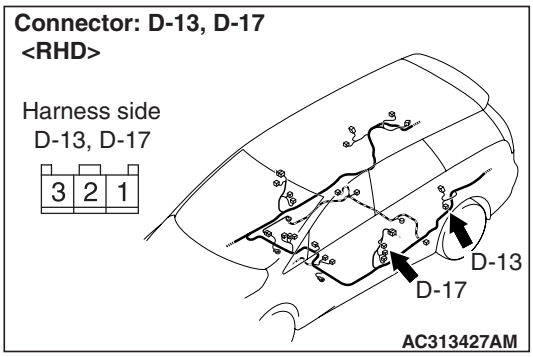

NOTE:

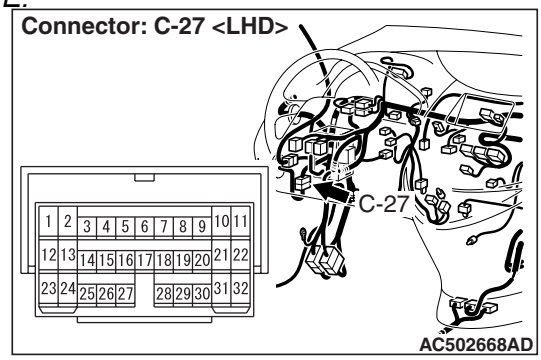

Main Index
Group TOC

Connectors: C-14, C-16

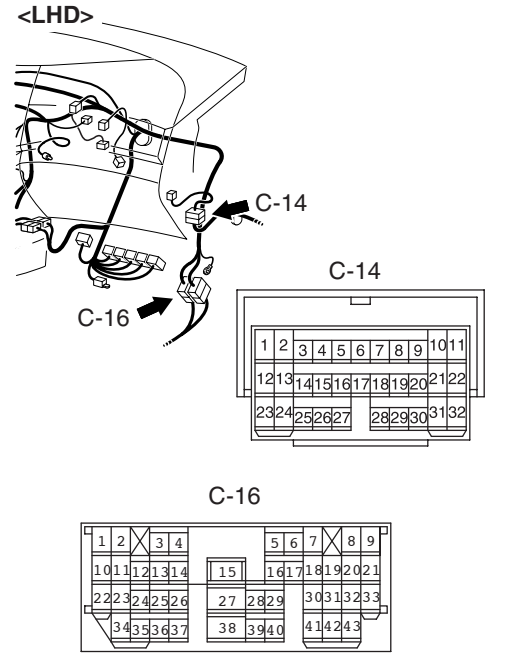

AC313397AD

Connectors: D-03, D-16 <LHD>

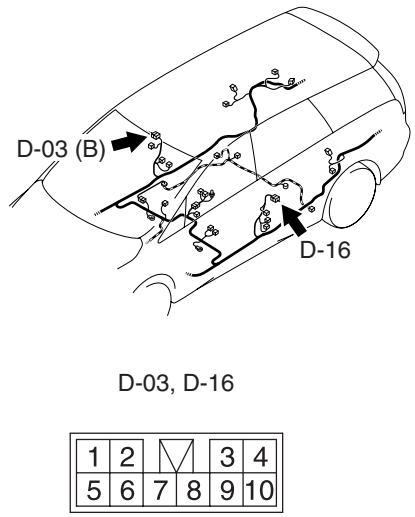

AC313426AC

Connector: C-210 <LHD>
Junction block (Front view)

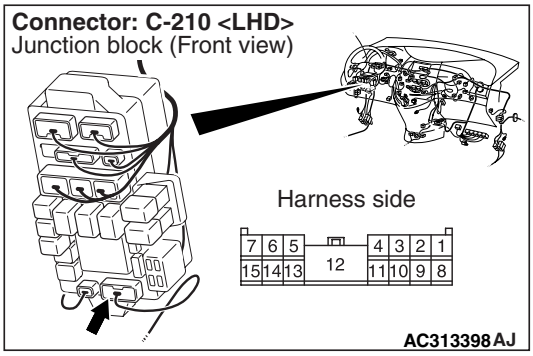

AC313398AJ

<LH drive vehicles>Prior to the wiring harness inspection, check intermediate connector C-14 <door switch (front: RH)>, C-16 <door switch (front: RH), door switch (front: LH)>, C-27 <door switch (front: LH)>, D-03 <door switch (rear: RH)>, D-16 <door switch (rear: LH)>, junction block connector C-210, and repair if necessary.

NOTE:

Connectors: C-14, C-16
<RHD>

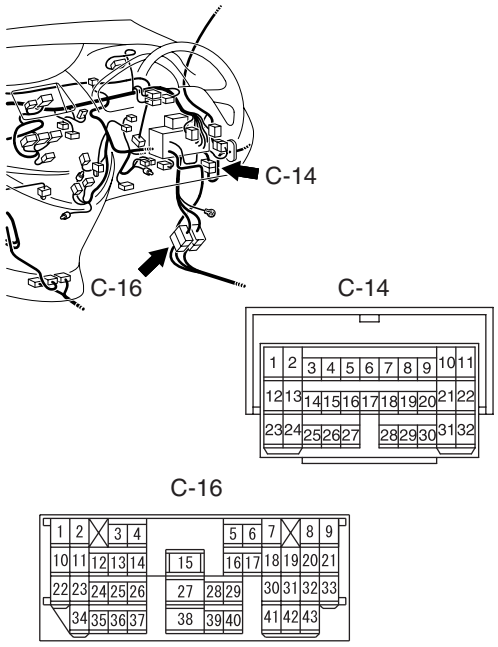

AC313407AY

Connector: C-27

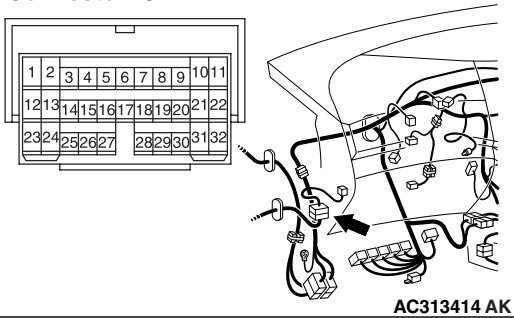

AC313414AK

Main Index
Group TOC

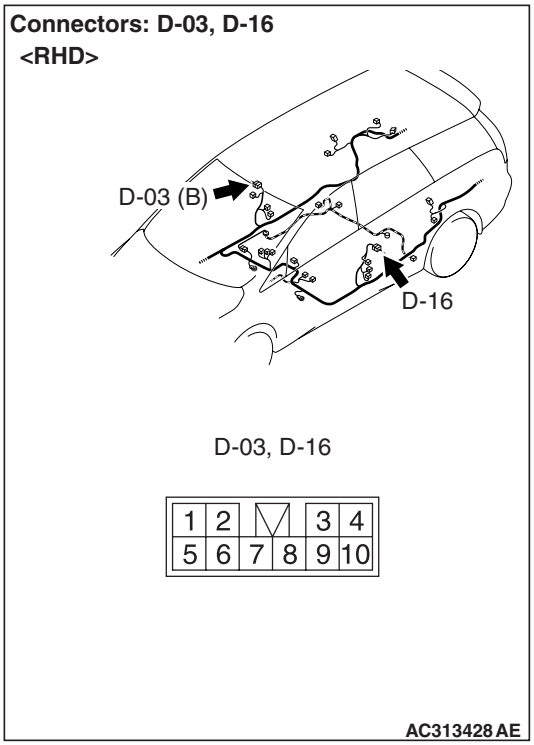

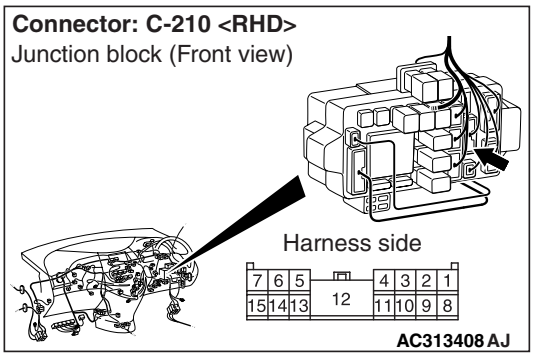

<RH drive vehicles> Prior to the wiring harness inspection, check intermediate connector C-14 <door switch (front: RH)>, C-16 <door switch (front: RH) and door switch (front: LH)>, C-27 <door switch (front: LH)>, D-03 <door switch (rear: RH)>, D-16 <door switch (rear: LH)>, junction block connector C-210, and repair if necessary.

Q: Is the check result normal?

YES : . Replace the door lamp.

NO : . Repair the wiring harness.

Main Index
Group TOC

Inspection Procedure O-6: Interior lamp automatic shutoff function does not work normally. <Vehicles with keyless entry system>

⚠ CAUTION
Whenever the ECU is replaced, ensure that the input and output signal circuits are normal.

Interior Lamp Automatic Shut-off Function Circuit

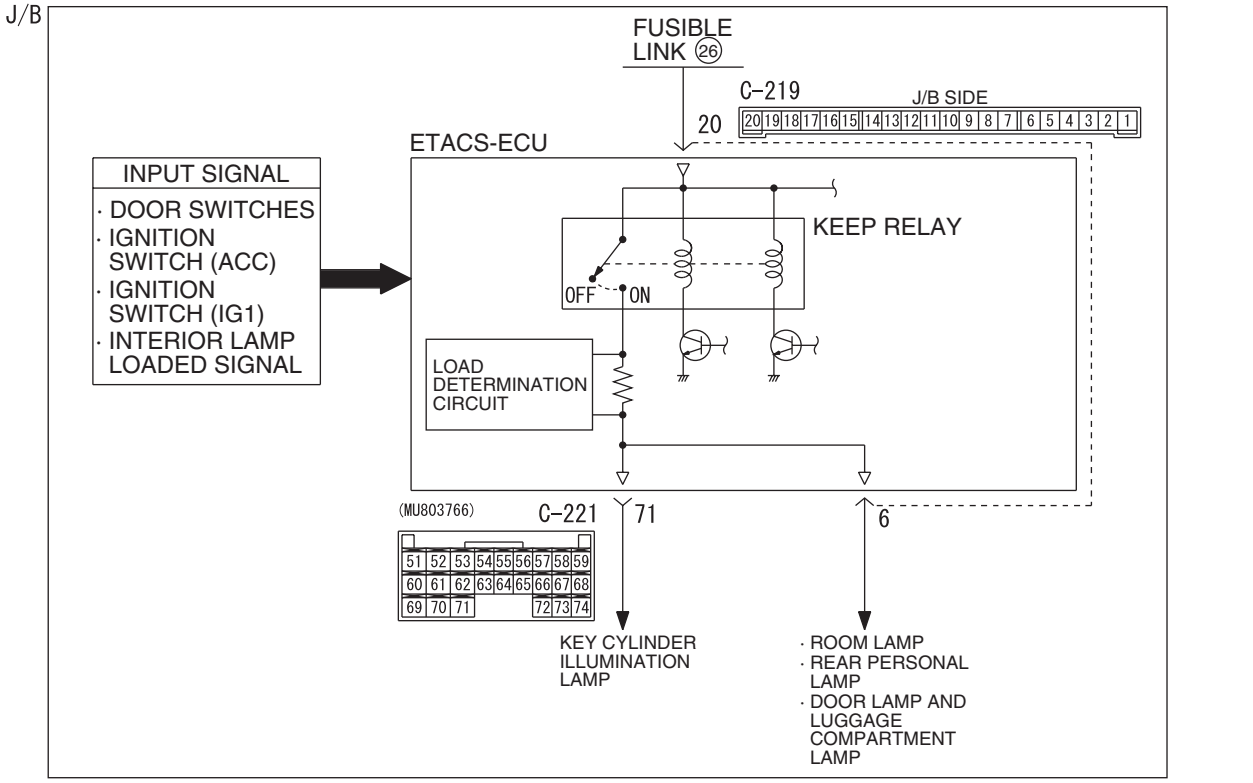

W4X54X048A

COMMENTS ON TROUBLE SYMPTOM

The ETACS-ECU operates the interior lamp automatic-shutdown function in accordance with the input signals below.

- Ignition switch (ACC)
- Ignition switch (IG1)
- Driver's door switch
- Tailgate switch
- All of the door switches
- Interior lamp loaded signal

If this function does not work normally, these input signal circuit(s) or the ETACS-ECU may be defective. Note that this function can be disabled/enabled by the adjustment function (default setting; enabled).

POSSIBLE CAUSES

- Malfunction of the door switches
- Malfunction of the tailgate switch
- Malfunction of the interior lamp
- Malfunction of the ETACS-ECU
- Damaged harness wires and connectors

Main Index
Group TOC

DIAGNOSIS PROCEDURE

Step 1. Customize function by using the SWS monitor

Use the SWS monitor customisation function to confirm that "Room lamp auto-cut" is set to other than "Without function" (one of the settings below).

- 3min.
- 30min.
- 60min.

Q: Is the check result normal?

YES : . Go to Step 2.

NO : . Use the SWS monitor customisation function to confirm that "Room lamp auto-cut" is set to other than "Without function" (Refer to P.54C-432).

Step 2. ECU check by using the SWS monitor

Check that the power supply and earth lines to the ETACS-ECU and the SWS communication lines are normal.

- Ignition switch: OFF

ECU TO BE CHECKED

- ETACS

OK: "OK" is displayed on the "ETACS ECU" menu.

Q: Is the check result normal?

YES : . Go to Step 3.

NO : . Refer to Inspection Procedure A-3 "Communication with ETACS-ECU is not possible P.54C-51."

Step 3. SWS monitor data list.

Check the input signals below, which are related to the interior lamp automatic-shutdown function.

<Selected item> ETACS ECU

- Ignition switch: OFF
- Driver's door: open

Item No.	Item name	Normal condition
Item 30	IG SW(IG1)	OFF
Item 31	IG SW(ACC)	OFF
Item 32	DR DOOR SW	ON

OK: Normal condition is displayed.

Q: Is the check result normal?

Normal conditions are displayed for all the items. : Go to Step 4.

Normal condition is not displayed for item No.30. : Refer to inspection procedure P-2 "The ignition switch (IG1) signal is not received P.54C-335."

Normal condition is not displayed for item No.31. : Refer to inspection procedure P-1 "The ignition switch (ACC) signal is not received P.54C-332."

Normal condition is not displayed for item No.32. : Refer to inspection procedure P-5 "The driver's door switch signal is not received P.54C-346 <LH drive vehicles> or P.54C-348 <RH drive vehicles."

Step 4. ETACS switch data by using the SWS monitor

Check the ETACS-ECU signals related to the operation of the interior lamp automatic-shutdown function.

- Passenger's door: Close → Open

Item No.	Item name	Normal condition
Item 05	Passenger's door switch	from OFF to ON

- Tailgate: Close → Open

Item No.	Item name	Normal condition
Item 07	Trunk or lift gate switch	from OFF to ON

- Rear door (RH): Close → Open

Item No.	Item name	Normal condition
Item 41	Rear door (right side) switch	from OFF to ON

- Rear door (LH): Close → Open

Item No.	Item name	Normal condition
Item 42	Rear door (left side) switch	from OFF to ON

OK: Normal conditions are displayed for all the items.

Q: Are the check result normal?

YES : Go to Step 5.

NO : Refer to inspection procedure P-12 "All the door switch signals are not received P.54C-373."

Step 5. Pulse check
Check the input signals below, which are related to the room lamp automatic-shutdown function.

System switch	Check condition
Interior lamp loaded signal	When a load is applied through multi-purpose fuse No.18

OK: The M.U.T.-III sounds or the voltmeter needle fluctuates.

Q: Is the check result normal?
YES : Go to Step 6.
NO : Refer to inspection procedure P-22 "The interior lamp loaded signal is not detected P.54C-421."

Step 6. Retest the system.
Check that the interior lamp automatic-shutdown function works normally.

Q: Is the check result normal?
YES : The trouble can be an intermittent malfunction (Refer to GROUP 00 – How to Cope with Intermittent Malfunction P.00-5).
NO : Replace the ETACS-ECU.

Inspection Procedure O-7: The door-ajar warning lamp does not illuminate/extinguish normally.

⚠ CAUTION
Whenever the ECU is replaced, ensure that the input and output signal circuits are normal.

Door-Ajar Warning Lamp Function

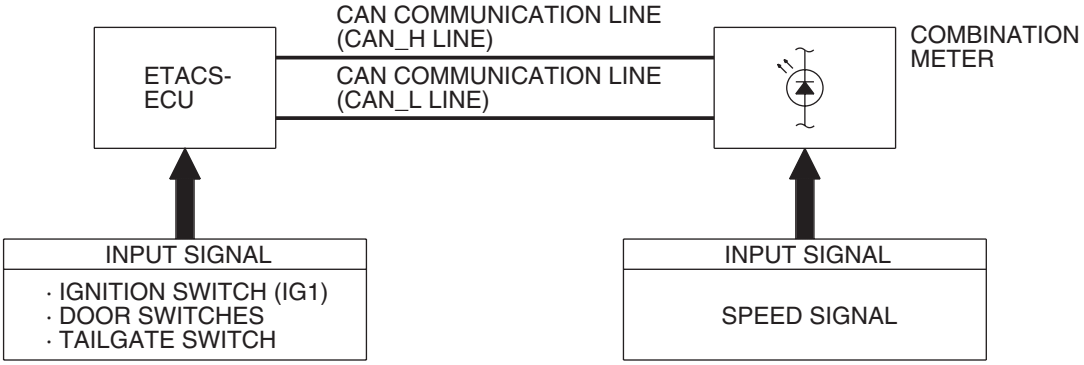

W4X54X049A

COMMENTS ON TROUBLE SYMPTOM
If the door-ajar warning lamp does not work normally, the input signal circuit, the CAN bus line, or the ETACS-ECU may be defective.

POSSIBLE CAUSES
- Malfunction of the combination meter
- The CAN bus line is defective.
- Malfunction of the ETACS-ECU
- Damaged harness wires and connectors

DIAGNOSIS PROCEDURE

Step 1. M.U.T.-III CAN bus diagnostics.
Use the M.U.T.-III to diagnose the CAN bus lines.

Q: Is the check result normal?
YES : Go to Step 2.
NO : Repair the CAN bus line (Refer to GROUP 54F, Diagnosis P.54F-13).

Main Index
Group TOC

Step 2. Check for combination meter diagnosis code.

Check whether the combination meter-related diagnosis code is set.

Q: Is the diagnosis code set?

YES : Diagnose the combination meter (Refer to GROUP 54A – Troubleshooting P.54A-55).

NO : Go to Step 3.

Step 3. ECU check by using the SWS monitor

Check that the power supply and earth lines to the ETACS-ECU and the SWS communication lines are normal.

- Ignition switch: OFF

ECUS TO BE CHECKED

- ETACS ECU

OK: "OK" is displayed on the "ETACS ECU" menu.

Q: Is the check result normal?

YES : Go to Step 4.

NO : Refer to Inspection Procedure A-3 "Communication with the ETACS-ECU is not possible P.54C-51."

Step 4. SWS monitor data list.

Check the input signal from the driver's door switch.

<Selected item> ETACS ECU

- Driver's door: open

Item No.	Item name	Normal condition
Item 32	DR DOOR SW	ON

OK: Normal condition is displayed.

Q: Is the check result normal?

YES : Go to Step 5.

NO : Refer to inspection procedure P-5 "The driver's door switch signal is not received P.54C-346 <LH drive vehicles> or P.54C-348 <RH drive vehicles."

Step 5. ETACS switch data by using the SWS monitor

Check the SWS communication signal, which is related to the door-ajar warning lamp.

- Passenger's door: Close → Open

Item No.	Item name	Normal condition
Item 05	Passenger's door switch	from OFF to ON

- Tailgate: Close → Open

Item No.	Item name	Normal condition
Item 07	Trunk or lift gate switch	from OFF to ON

- Rear door (RH): Close → Open

Item No.	Item name	Normal condition
Item 41	Rear door (right side) switch	from OFF to ON

- Rear door (LH): Close → Open

Item No.	Item name	Normal condition
Item 42	Rear door (left side) switch	from OFF to ON

OK: Normal conditions displayed for all the items.

Q: Is the check result normal?

YES : Go to Step 6.

NO : Refer to inspection procedure P-12 "All the door switch signals are not received P.54C-373."

Step 6. ETACS ANALOG data by using the SWS monitor.

Check the ETACS-ECU signal related to the door-ajar warning lamp.

- Set the simulated vehicle speed at approximately 10km/h.

Item No.	Item name	Normal condition
Item 03	Vehicle speed	8 – 10km/h

OK: Normal condition is displayed.

Q: Is the check result normal?

YES : Go to Step 7.

NO : Refer to inspection procedure P-23 "The vehicle speed signal is not received P.54C-425."

Main Index
Group TOC

Step 7. M.U.T.-III actuator test

Perform the actuator test for the combination meter, and check that the door-ajar warning lamp illuminates (Refer to GROUP 54A – Combination Meter P.54A-95).

Q: Is the check result normal?

YES : . Replace the ETACS-ECU.

NO : . Replace the combination meter.

INPUT SIGNAL PROCEDURES

Main Index
Group TOC

INSPECTION PROCEDURE P-1: The ignition switch (ACC) signal is not received.

⚠ CAUTION
Whenever the ECU is replaced, ensure that the input signal circuit is normal.

Ignition Switch (ACC) Input Circuit

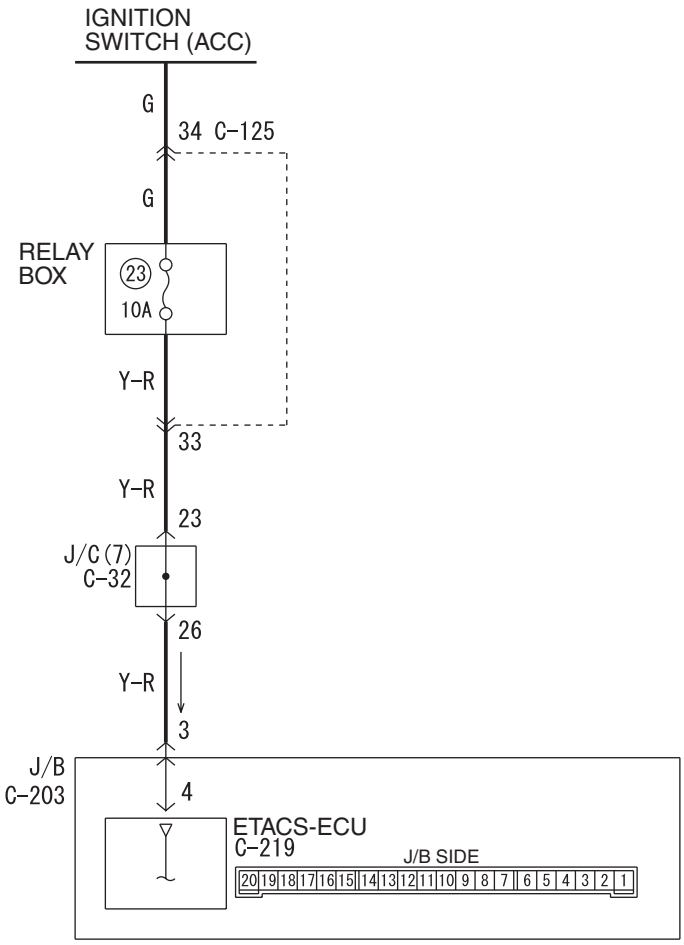

Wire colour code
B : Black LG : Light green G : Green L : Blue W : White Y : Yellow SB : Sky blue
BR : Brown O : Orange GR : Grey R : Red P : Pink V : Violet PU : Purple

W6X54X028A

COMMENTS ON TROUBLE SYMPTOM

Input signal from the ignition switch (ACC) is used to operate the functions below. If the signal is abnormal, these functions will not work normally.

- Sunroof
- Windshield wiper and washer
- Rear wiper and washer
- Electric retractable remote controlled door mirror
- Interior lamp automatic-shutdown

POSSIBLE CAUSES

- Malfunction of the ETACS-ECU
- Damaged harness wires and connectors

Main Index
Group TOC

DIAGNOSIS PROCEDURE

Step 1. Connector check: C-219 ETACS-ECU connector

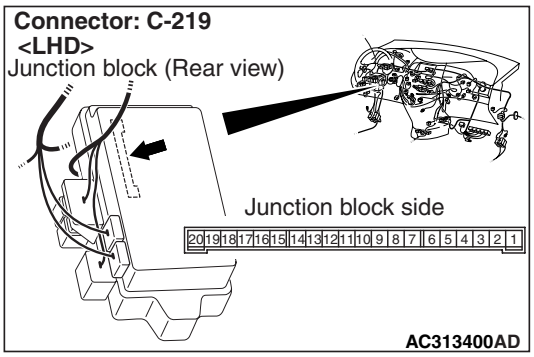

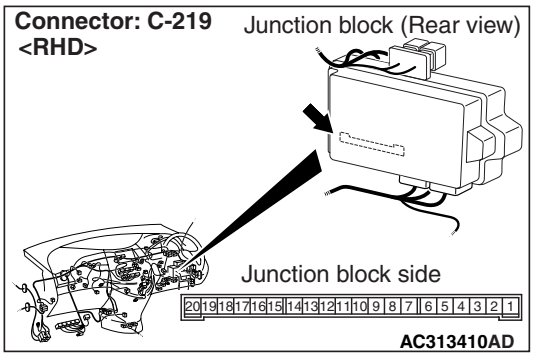

Q: Is the check result normal?
YES : Go to Step 2.
NO : Repair the defective connector.

Step 2. Voltage measurement at the C-219 ETACS-ECU connector.

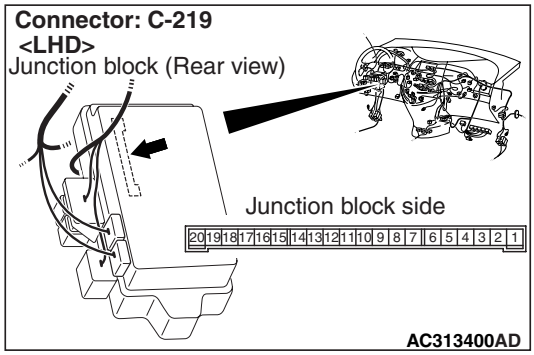

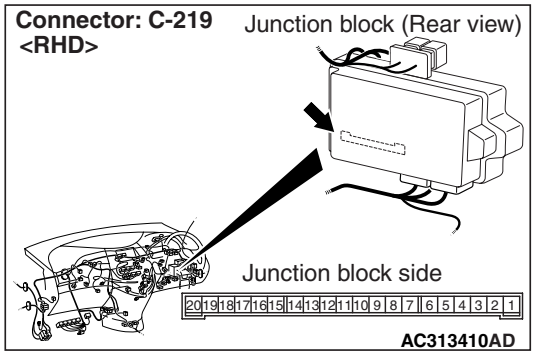

(1) Remove the ETACS-ECU, and measure at the junction block side.
(2) Ignition switch: ACC position

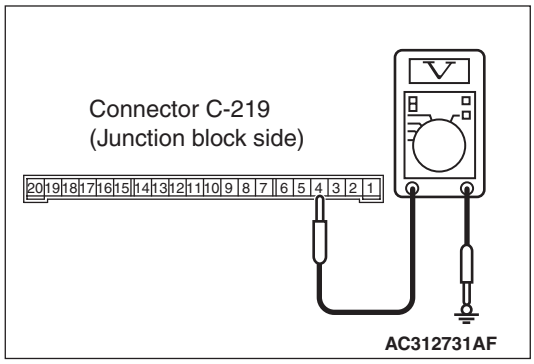

(3) Voltage between C-219 ETACS-ECU connector terminal No.4 and body earth

OK: System voltage

Q: Is the check result normal?
YES : Go to Step 4.
NO : Go to Step 3.

Main Index
Group TOC

Step 3. Check the wiring harness between C-219 ETACS-ECU connector terminal No.4 and the ignition switch (ACC).

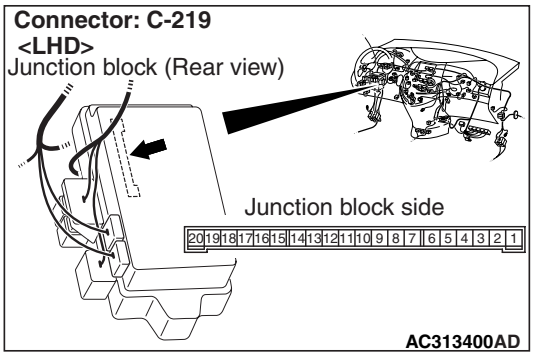

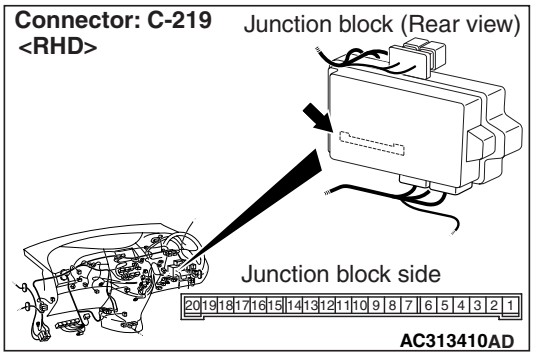

NOTE:

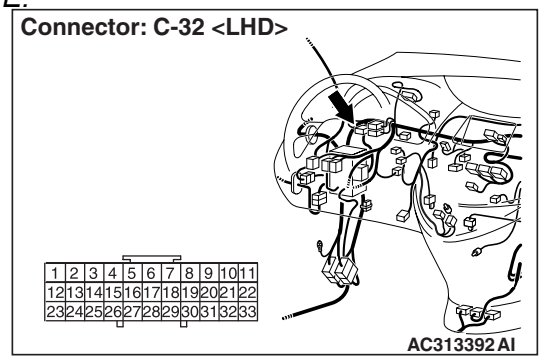

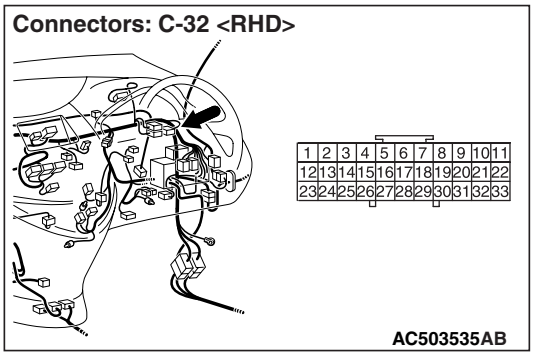

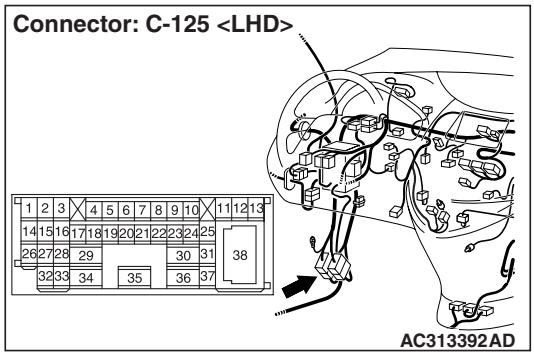

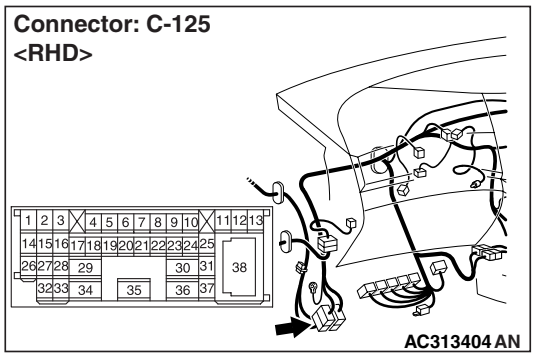

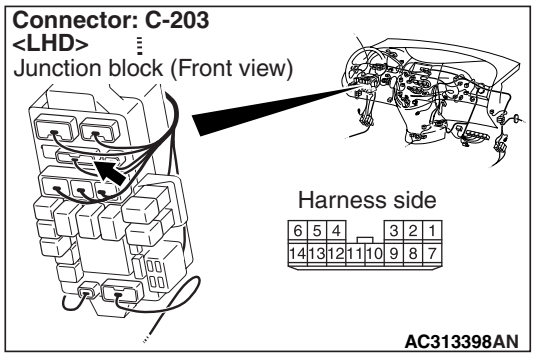

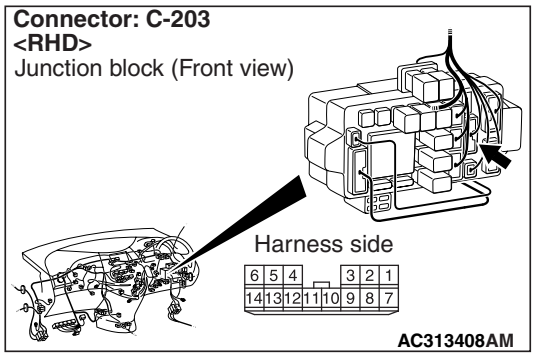

Prior to the wiring harness inspection, check intermediate connector C-125, and joint connector C-32, and junction block connector C-203, and repair if necessary.

- Check the power supply line for open circuit.

Q: Is the check result normal?

YES : The trouble can be an intermittent malfunction (Refer to GROUP 00 – How to Cope with Intermittent Malfunction P.00-5).

NO : Repair the wiring harness.

Main Index
Group TOC

Step 4. SWS monitor data list.

<Selected item> ETACS ECU

- Ignition switch: ACC

Item No.	Item name	Normal condition
Item 31	IG SW(ACC)	ON

OK: Normal condition is displayed.

Q: Is the check result normal?

YES : The trouble can be an intermittent malfunction (Refer to GROUP 00 – How to Cope with Intermittent Malfunction P.00-5).

NO : Replace the ETACS-ECU.

INSPECTION PROCEDURE P-2: The ignition switch (IG1) signal is not received.

⚠ CAUTION

Whenever the ECU is replaced, ensure that the input signal circuit is normal.

Ignition Switch (IG1) Input Circuit

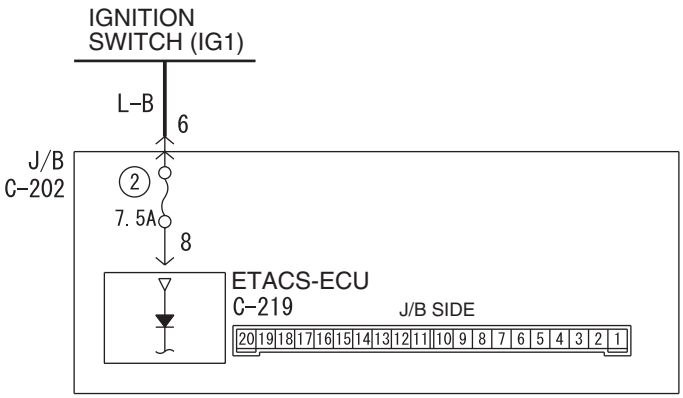

Wire colour code
B : Black LG : Light green G : Green L : Blue W : White Y : Yellow SB : Sky blue
BR : Brown O : Orange GR : Gray R : Red P : Pink V : Violet

W4X54E110A

COMMENTS ON TROUBLE SYMPTOM

Input signal from the ignition switch (IG1) is used to operate the functions below. If the signal is abnormal, these functions will not work normally.

- Lamp reminder function
- Door-ajar warning buzzer function
- Turn-signal lamp operation sound function
- Power window
- Ignition key cylinder illumination lamp
- Seat belt indicator
- Head and tail lamps
- Headlamp automatic-shutdown function
- Turn-signal lamp
- Interior lamps
- Interior lamp automatic-shutdown function

POSSIBLE CAUSES

- Malfunction of the ETACS-ECU
- Damaged harness wires and connectors

Main Index
Group TOC

DIAGNOSTIC PROCEDURE

Step 1. Connector check: C-219 ETACS-ECU connector

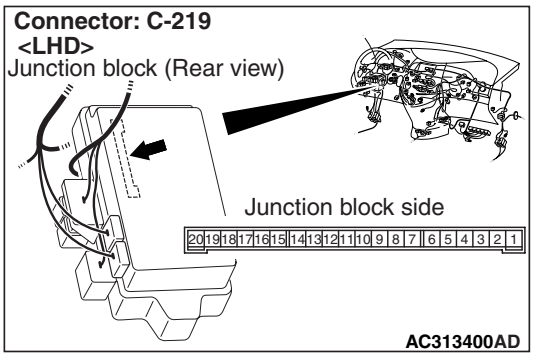

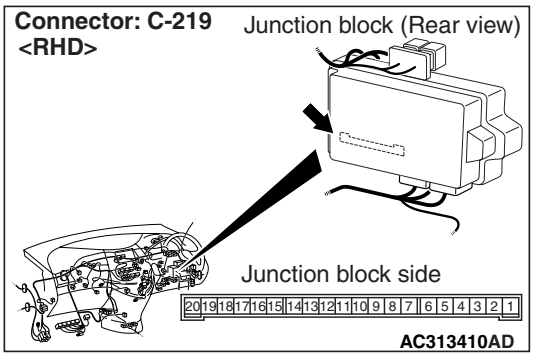

Q: Is the check result normal?
YES : Go to Step 2.
NO : Repair the defective connector.

Step 2. Voltage measurement at the C-219 ETACS-ECU connector.

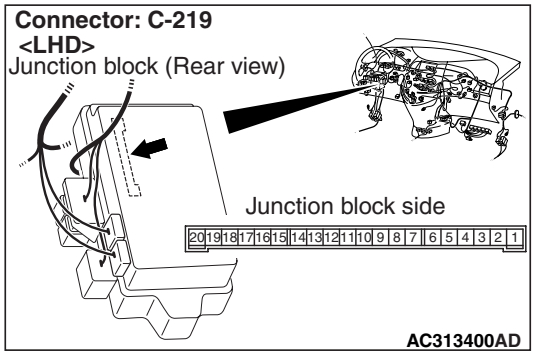

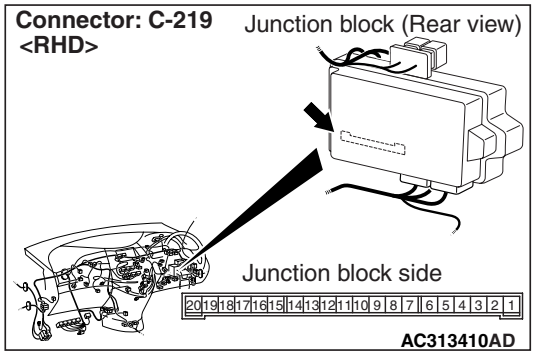

(1) Remove the ETACS-ECU, and measure at the junction block side.
(2) Ignition switch: ON position

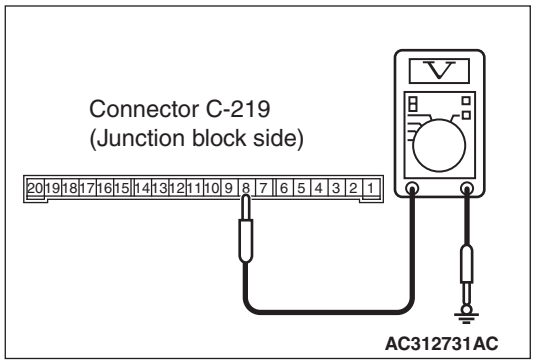

(3) Voltage between C-219 ETACS-ECU connector terminal No.8 and body earth

OK: System voltage

Q: Is the check result normal?
YES : Go to Step 4.
NO : Go to Step 3.

Main Index
Group TOC

Step 3. Check the wiring harness between C-219 ETACS-ECU connector terminal No.8 and the ignition switch (IG1).

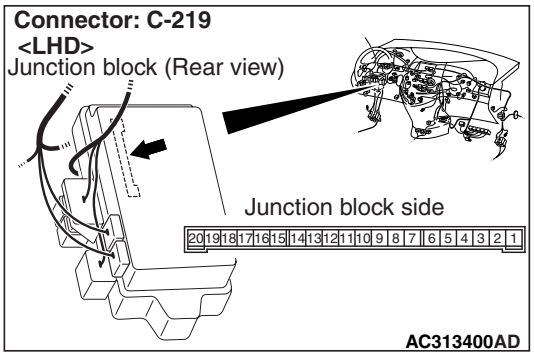

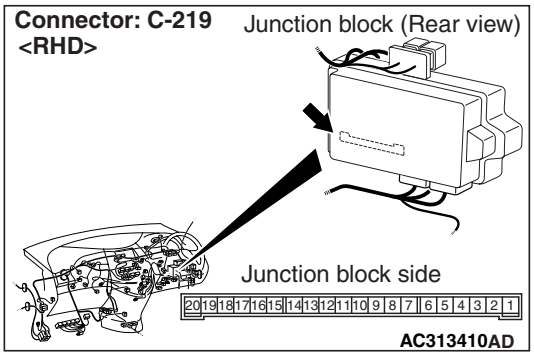

NOTE:

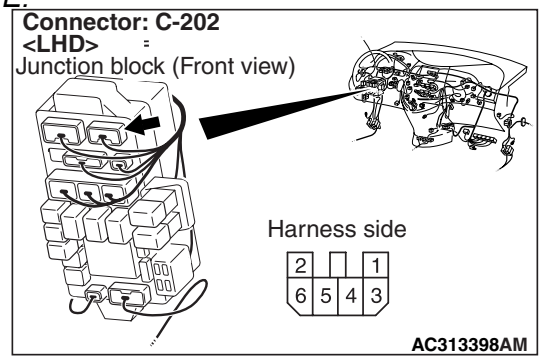

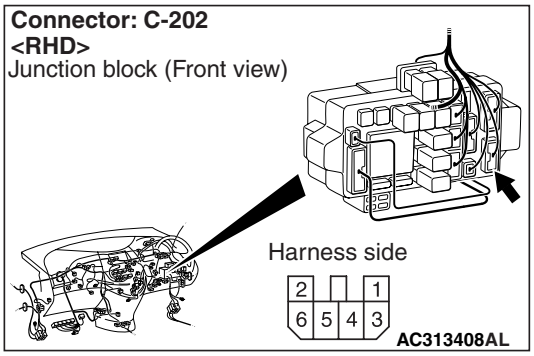

Prior to the wiring harness inspection, check junction block connector C-202, and repair if necessary.

- Check the power supply line for open circuit.

Q: Is the check result normal?

YES : The trouble can be an intermittent malfunction (Refer to GROUP 00 – How to Cope with Intermittent Malfunction P.00-5).

NO : Repair the wiring harness.

Step 4. Retest the system.

Check that the ignition switch (IG1) signal is received normally.

Q: Is the check result normal?

YES : The trouble can be an intermittent malfunction (Refer to GROUP 00 – How to Cope with Intermittent Malfunction P.00-5).

NO : Replace the ETACS-ECU.

Main Index
Group TOC

INSPECTION PROCEDURE P-3: The back-up lamp switch signal is not received. <M/T>

⚠ CAUTION
Whenever the ECU is replaced, ensure that the input signal circuit is normal.

Back-up Lamp Switch Input Circuit

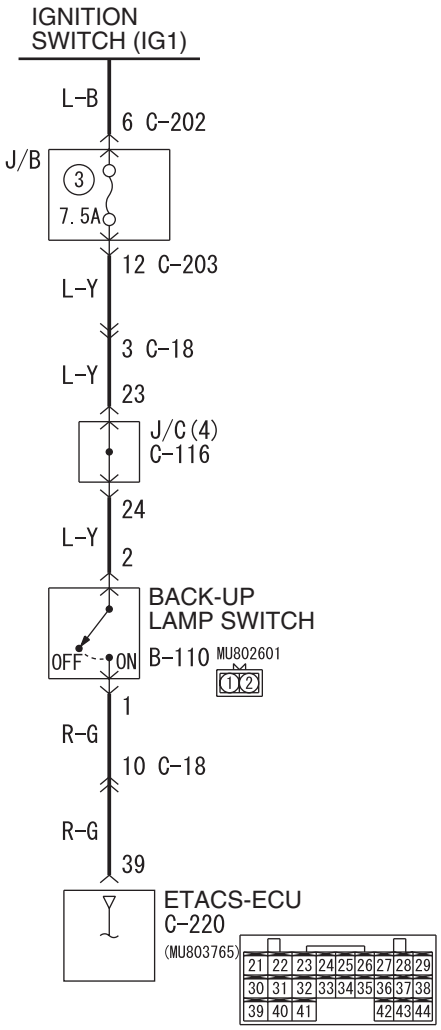

Wire colour code
B : Black LG : Light green G : Green L : Blue W : White Y : Yellow SB : Sky blue
BR : Brown O : Orange GR : Grey R : Red P : Pink V : Violet PU : Purple

W4X54X195A

COMMENTS ON TROUBLE SYMPTOM

Input signal from the back-up lamp switch is used to operate the rear wiper. If the signal is abnormal, the rear wiper will not work normally.

POSSIBLE CAUSES

- Malfunction of the back-up lamp switch
- Malfunction of the ETACS-ECU
- Damaged harness wires and connectors

Main Index
Group TOC

DIAGNOSIS PROCEDURE

Step 1. Connector check: B-110 back-up lamp switch connector and C-220 ETACS-ECU connector

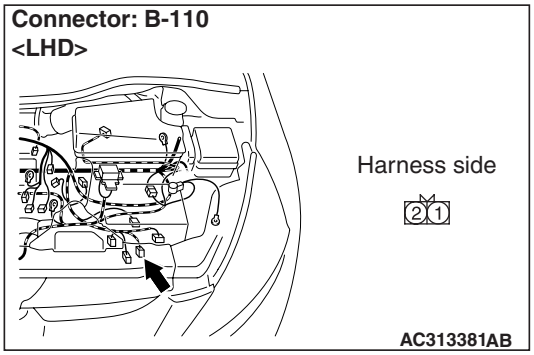

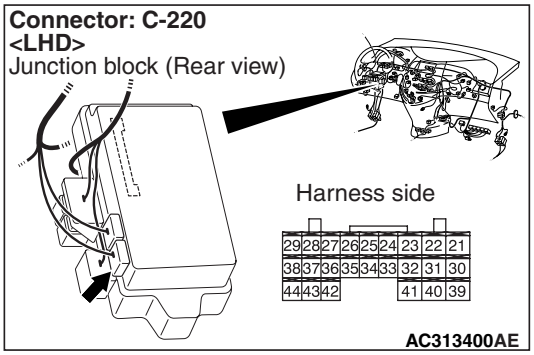

Q: Is the check result normal?
YES : Go to Step 2.
NO : Repair the defective connector.

Step 2. Check the back-up lamp switch

Check the back-up lamp switch (Refer to GROUP 22B – Transmission P.22B-18).

Q: Is the check result normal?
YES : Go to Step 3.
NO : Replace the inhibitor switch.

Step 3. Voltage measurement at the C-220 ETACS-ECU connector.

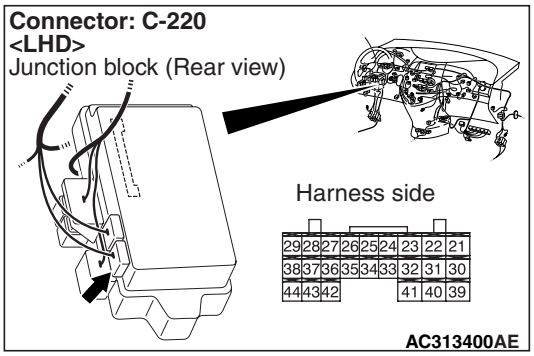

(1) Disconnect the connector, and measure at the wiring harness side.
(2) Ignition switch: ON
(3) Shift position: R position

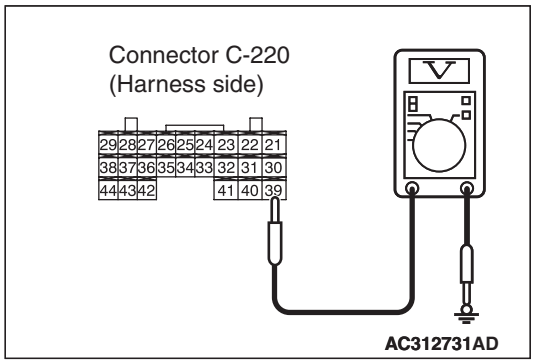

(4) Voltage between C-220 ETACS-ECU connector terminal No.39 and body earth

OK: System voltage

Q: Is the check result normal?
YES : Replace the ETACS-ECU.
NO : Go to Step 4.

Step 4. Voltage measurement at the B-110 back-up lamp switch connector.

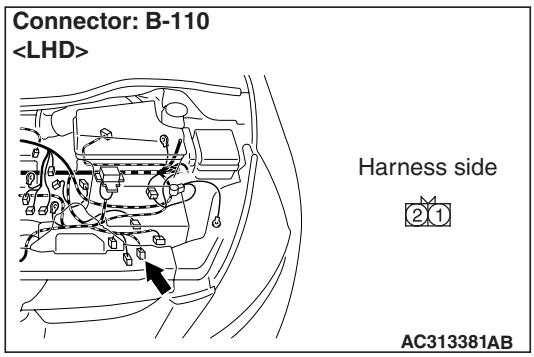

(1) Disconnect the connector, and measure at the wiring harness side.
(2) Ignition switch: ON

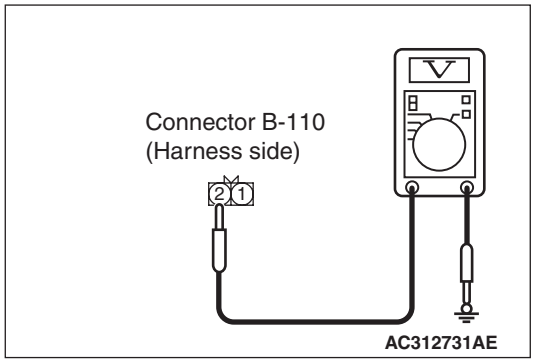

(3) Voltage between B-110 back-up lamp switch connector terminal No.2 and body earth

OK: System voltage

Q: Is the check result normal?
YES : Go to Step 5.
NO : Go to Step 6.

Main Index
Group TOC

Step 5. Check the wiring harness between B-110 back-up lamp switch connector terminal No.1 and C-220 ETACS-ECU connector terminal No.39.

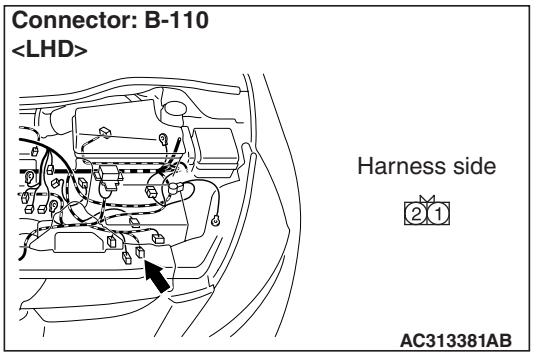

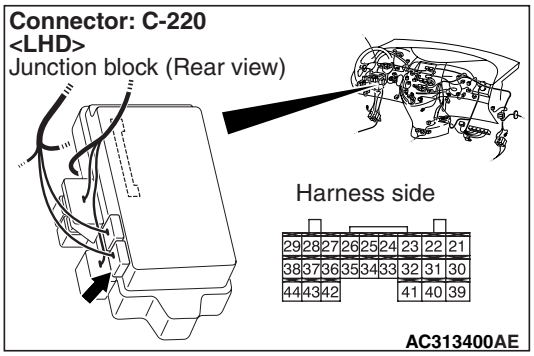

NOTE:

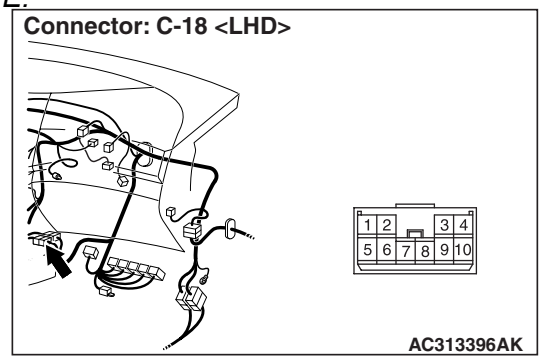

Prior to the wiring harness inspection, check intermediate connector C-18, and repair if necessary.

- Check the input line for open circuit.

Q: Is the check result normal?

YES : Go to Step 7.

NO : Repair the wiring harness.

Step 6. Check the wiring harness between B-110 back-up lamp switch connector terminal No.2 and the ignition switch (IG1).

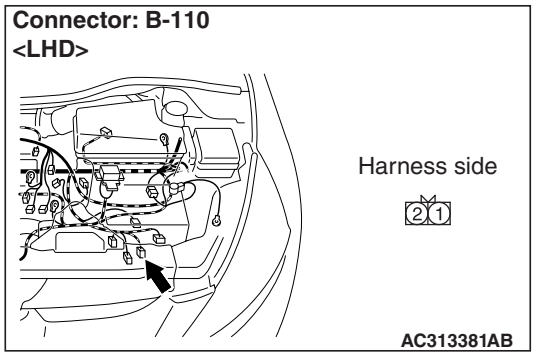

NOTE:

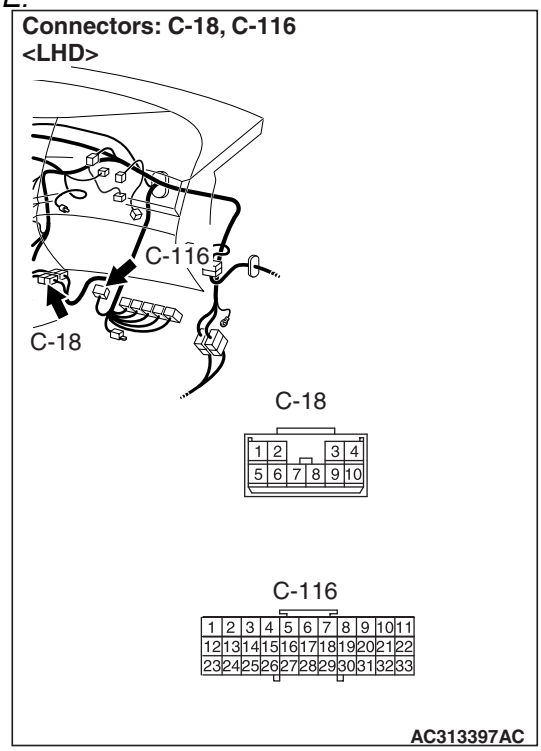

Main Index
Group TOC

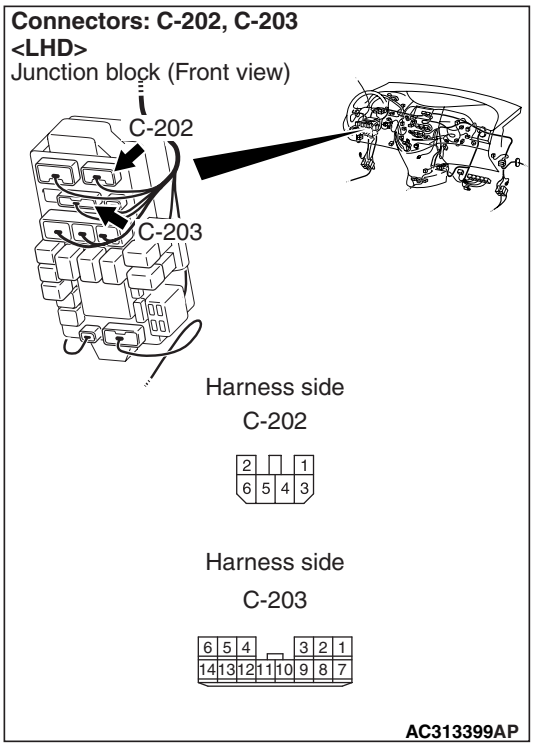

Prior to the wiring harness inspection, check joint connector C-116 and C-33 <RH drive vehicles>, intermediate connector C-18, junction block connectors C-202 and C-203, and repair if necessary.

- Check the power supply line to the ignition switch (IG1) for open circuit.

Q: Is the check result normal?

YES : . The trouble can be an intermittent malfunction (Refer to GROUP 00 – How to Cope with Intermittent Malfunction P.00-5).

NO : . Repair the wiring harness.

Step 7. SWS monitor data list.

<Selected item> ETACS ECU

- Ignition switch: ON
- Shift lever: R position

Item No.	Item name	Normal condition
Item 41	INHIBITOR SW	ON

OK: Normal condition is displayed.

Q: Is the check result normal?

YES : The trouble can be an intermittent malfunction (Refer to GROUP 00 – How to Cope with Intermittent Malfunction P.00-5).

NO : Replace the ETACS-ECU.

Main Index
Group TOC

INSPECTION PROCEDURE P-4: The front fog lamp switch signal is not received.

⚠ CAUTION
Whenever the ECU is replaced, ensure that the input signal circuit is normal.

Front Fog Lamp Switch Input Circuit

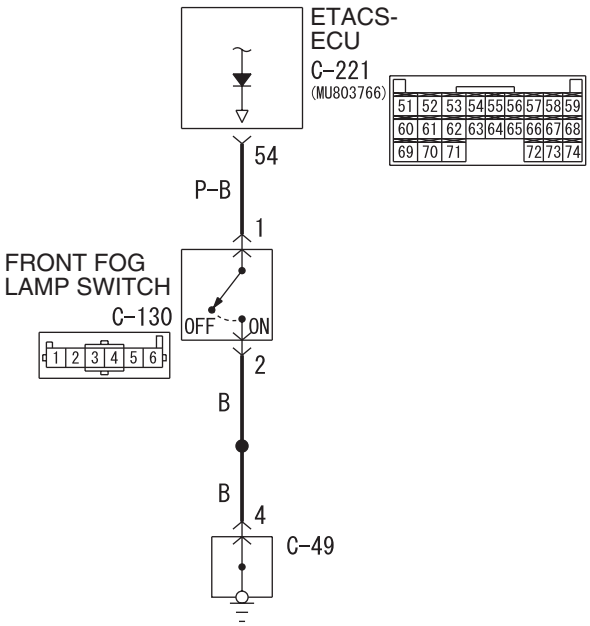

Wire colour code
B : Black LG : Light green G : Green L : Blue W : White Y : Yellow SB : Sky blue
BR : Brown O : Orange GR : Grey R : Red P : Pink V : Violet PU : Purple

W6X54X017A

COMMENTS ON TROUBLE SYMPTOM

Input signal from the fornt fog lamp switch is used to operate the front fog lamps. If the signal is abnormal, the front fog lamps will not illuminate and extinguish normally.

POSSIBLE CAUSES

- Malfunction of the fog lamp switch
- Malfunction of the ETACS-ECU
- Damaged harness wires and connectors

Main Index
Group TOC

DIAGNOSIS PROCEDURE

Step 1. Connector check: C-130 fog lamp switch connector

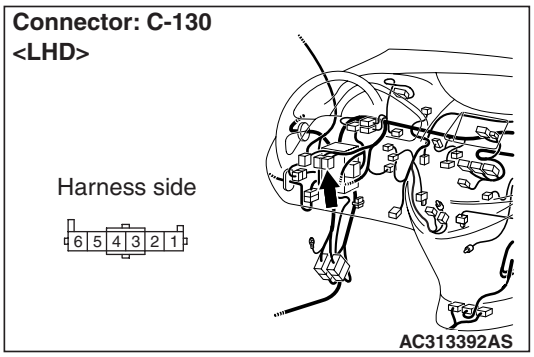

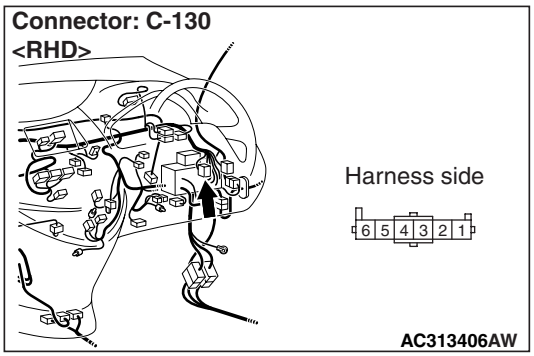

Q: Is the check result normal?
YES : Go to Step 2.
NO : Repair the defective connector.

Step 2. Check the front fog lamp switch.

Refer to GROUP 54A – Front fog lamp P.54A-149.

Q: Is the check result normal?
YES : Go to Step 3.
NO : Replace the fog lamp switch.

Step 3. Resistance measurement at the C-130 fog lamp switch connector.

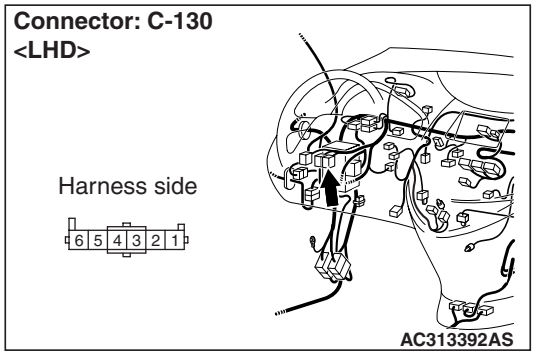

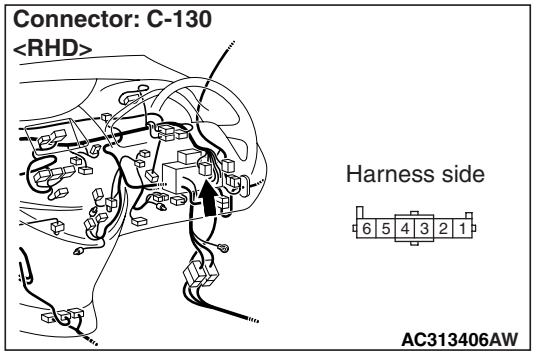

(1) Remove the fog lamp switch, and measure at the wiring harness side.

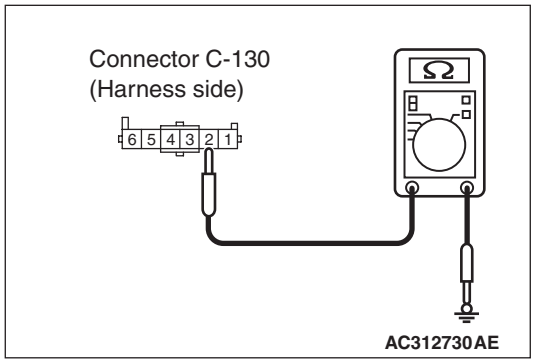

(2) Resistance between C-130 fog lamp switch connector terminal No.2 and body earth

OK: 2Ω or less

Q: Is the check result normal?
YES : Go to Step 6.
NO : Go to Step 4.

Main Index
Group TOC

Step 4. Connector check: C-49 earth connector

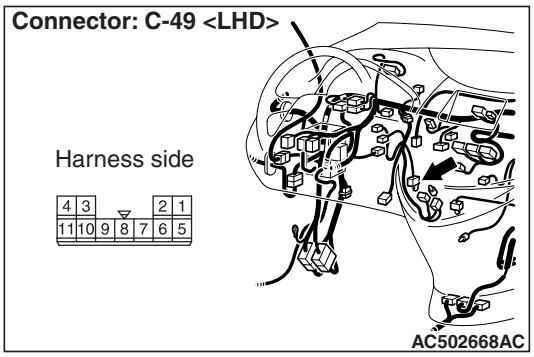

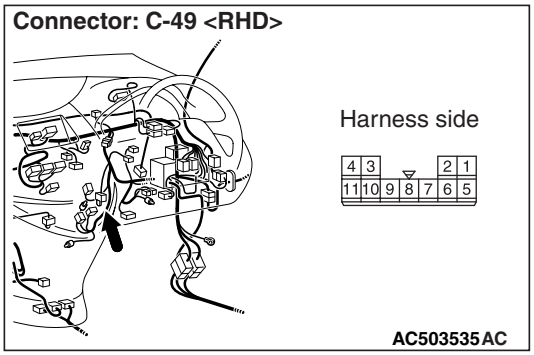

Q: Is the check result normal?
YES : Go to Step 5.
NO : Repair the connector.

Step 5. Check the wiring harness from C-130 fog lamp switch connector terminal No.2 to C-49 earth connector terminal No.4.

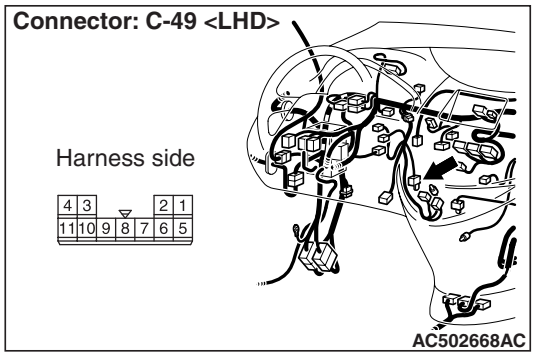

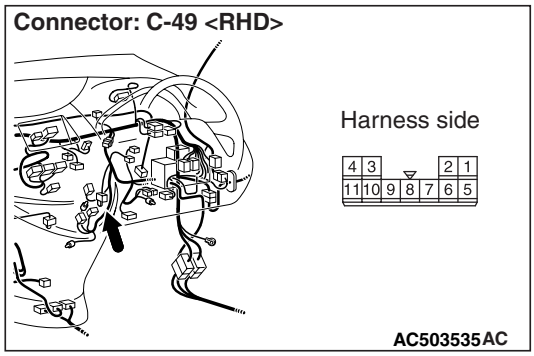

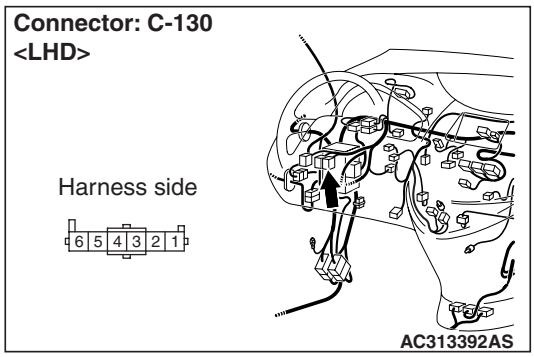

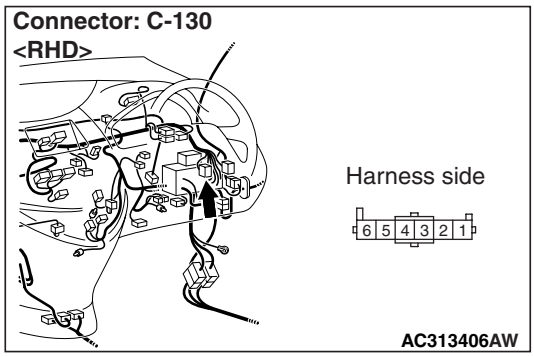

- Check the earth wires for open circuit.

Q: Is the check result normal?
YES : The trouble can be an intermittent malfunction (Refer to GROUP 00 – How to Cope with Intermittent Malfunction P.00-5).
NO : Repair the wiring harness.

Step 6. Connector check: C-221 ETACS-ECU connector

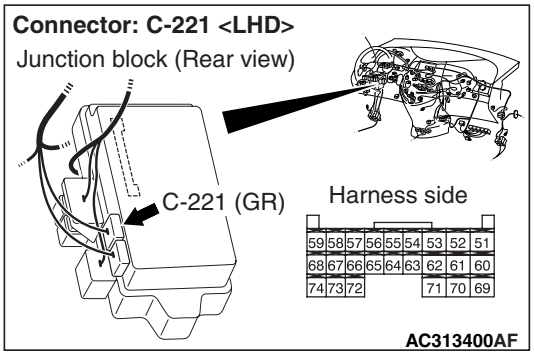

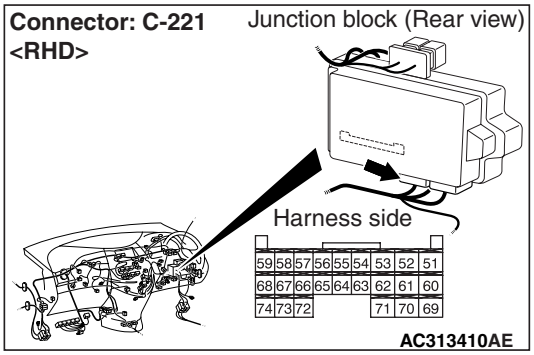

Q: Is the check result normal?
YES : Go to Step 7.
NO : Repair the defective connector.

Step 7. Check the wiring harness from C-221 ETACS-ECU connector No.54 to C-130 fog lamp switch connector terminal No.1.

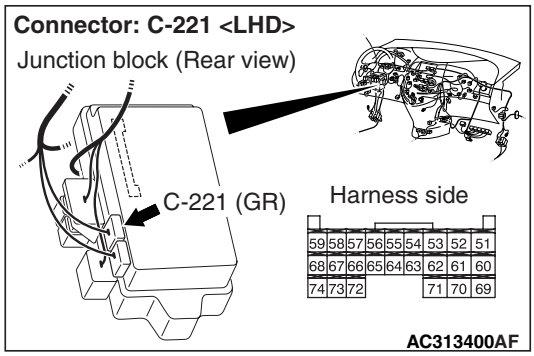

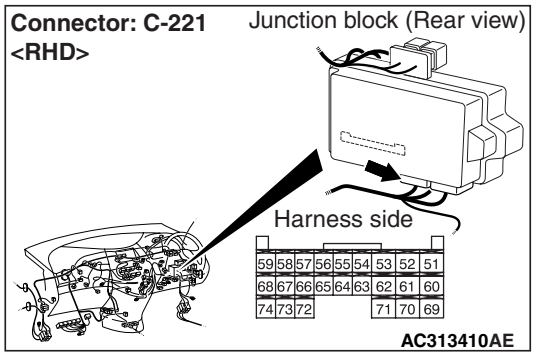

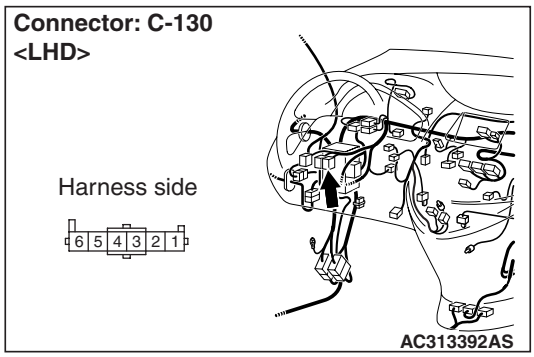

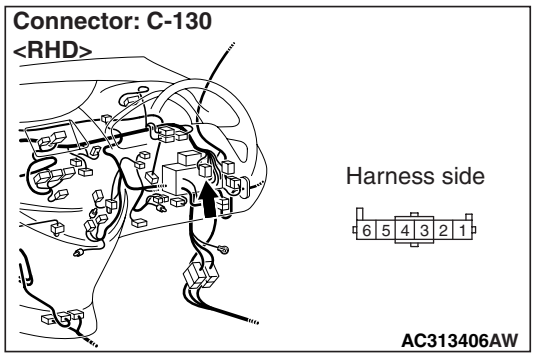

- Check the input line for open circuit.

Q: Is the check result normal?
YES : Go to Step 8.
NO : Repair the wiring harness.

Main Index
Group TOC

Step 8. SWS monitor data list

<Selected item> ETACS ECU

- Ignition switch: ON
- Lighting switch: "TAIL" or "HEAD"
- Front fog lamp switch: ON

Item No.	Item name	Normal condition
Item 36	F.FOG LAMP	ON

OK: Normal condition is displayed.

Q: Is the check result normal?

YES : The trouble can be an intermittent malfunction (Refer to GROUP 00 – How to Cope with Intermittent Malfunction P.00-5).

NO : Replace the ETACS-ECU.

INSPECTION PROCEDURE P-5: The driver's door switch signal is not received. <LH drive vehicles>

⚠ CAUTION

Whenever the ECU is replaced, ensure that the input signal circuit is normal.

Driver's Door Switch Input Circuit <LHD>

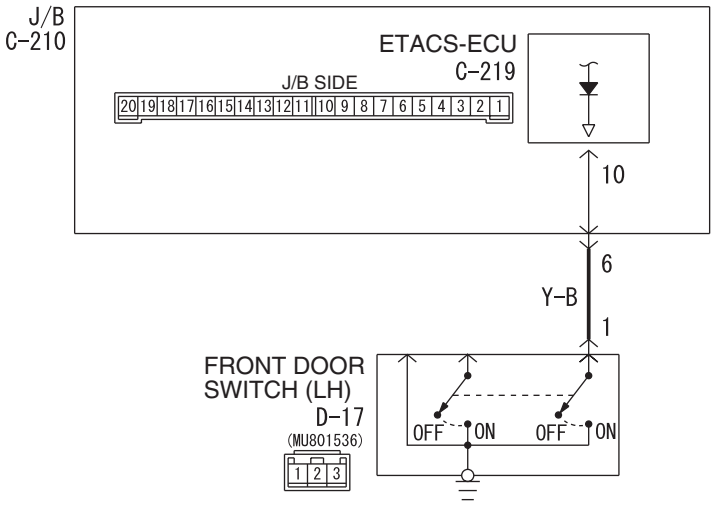

Wire colour code
B : Black LG : Light green G : Green L : Blue W : White Y : Yellow SB : Sky blue
BR : Brown O : Orange GR : Gray R : Red P : Pink V : Violet

W4X54E115A

COMMENTS ON TROUBLE SYMPTOM

Input signal from the driver's door switch is used to operate the functions below. If the signal is abnormal, these functions will not work normally.

- Lamp reminder function
- Door-ajar warning buzzer
- Keyless entry system
- Sunroof timer
- Electric retractable remote controlled door mirror
- Ignition key cylinder illumination lamp
- Head lamp automatic-shutdown
- Interior lamp
- Interior lamp automatic-shutdown
- Door-ajar warning lamp

POSSIBLE CAUSES

- Malfunction of the driver's door switch
- Malfunction of the ETACS-ECU
- Damaged harness wires and connectors

Main Index
Group TOC

DIAGNOSIS PROCEDURE

Step 1. Check the installation condition.
Check that the front door switch (LH) is installed on the body correctly.

Q: Is the check result normal?
YES : Go to Step 2.
NO : Correct the installation condition.

Step 2. Connector check: D-17 front door switch (LH) connector

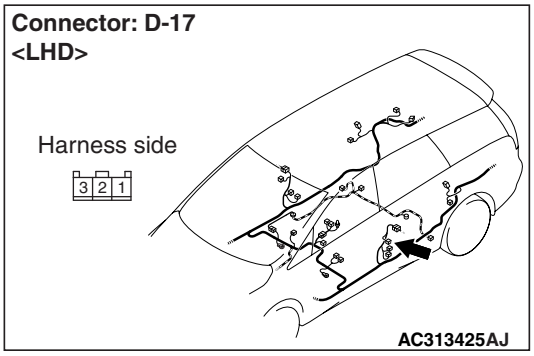

Q: Is the check result normal?
YES : Go to Step 3.
NO : Repair the defective connector.

Step 3. Check the front door switch (LH).
Refer to GROUP 42 – Door P.42-36.

Q: Is the check result normal?
YES : Go to Step 4.
NO : Replace the front door switch (LH).

Step 4. Connector check: C-219 ETACS-ECU connector

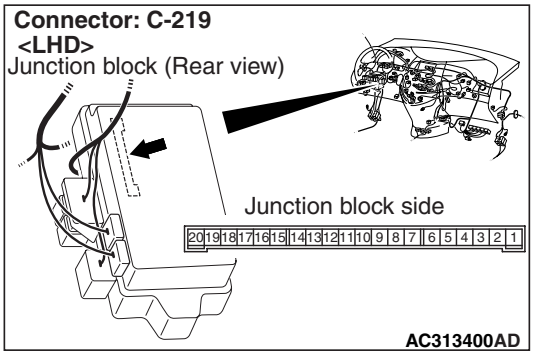

Q: Is the check result normal?
YES : Go to Step 5.
NO : Repair the defective connector.

Step 5. Check the wiring harness between D-17 front door switch (LH) connector terminal No.1 and C-219 ETACS-ECU connector terminal No.10.

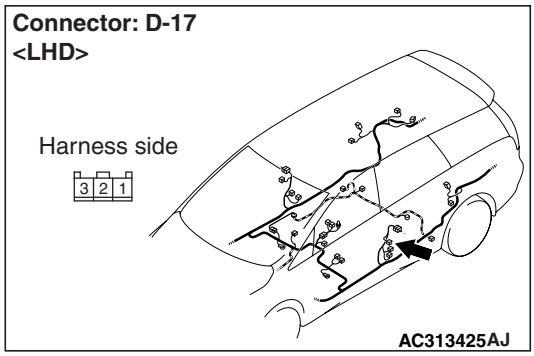

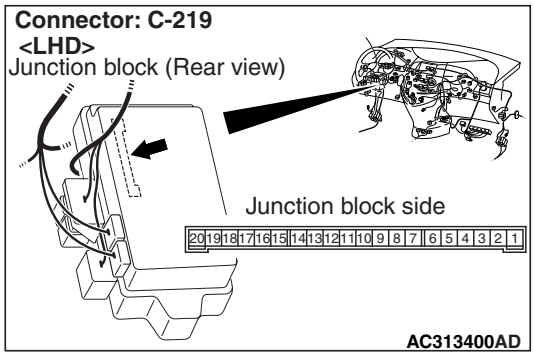

NOTE:

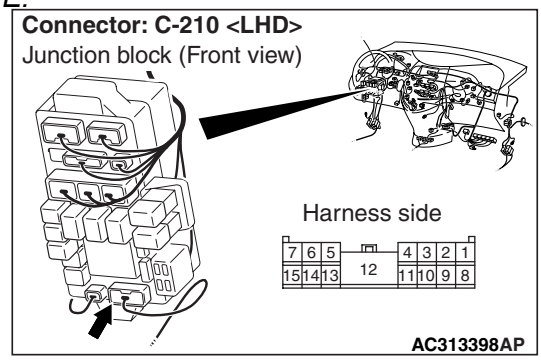

Prior to the wiring harness inspection, check joint connector C-210, and repair if necessary.

- Check the input line for open circuit.

Q: Is the check result normal?
YES : Go to Step 6.
NO : Repair the wiring harness.

Main Index
Group TOC

Step 6. SWS monitor data list.

<Selected item> ETACS ECU

- Driver's door: open

Item No.	Item name	Normal condition
Item 32	DR DOOR SW	ON

OK: Normal condition is displayed.

Q: Is the check result normal?

YES : The trouble can be an intermittent malfunction (Refer to GROUP 00 – How to Cope with Intermittent Malfunction P.00-5).

NO : Replace the ETACS-ECU.

INSPECTION PROCEDURE P-5: The driver's door switch signal is not received. <RH drive vehicles>

⚠ CAUTION

Whenever the ECU is replaced, ensure that the input signal circuit is normal.

Driver's Door Switch Input Circuit <RHD>

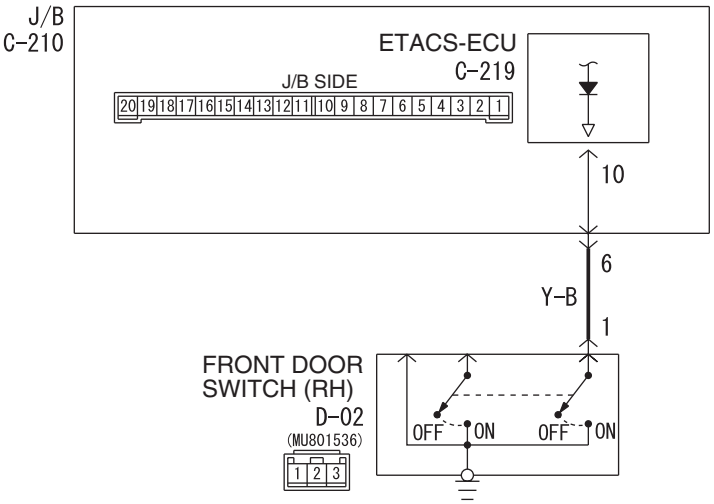

Wire colour code
B : Black LG : Light green G : Green L : Blue W : White Y : Yellow SB : Sky blue
BR : Brown O : Orange GR : Gray R : Red P : Pink V : Violet

W4X54E116A

COMMENTS ON TROUBLE SYMPTOM

Input signal from the driver's door switch is used to operate the functions below. If the signal is abnormal, these functions will not work normally.

- Lamp reminder function
- Door-ajar warning buzzer
- Keyless entry system
- Sunroof timer
- Electric retractable remote controlled door mirror
- Ignition key cylinder illumination lamp
- Head lamp automatic-shutdown
- Interior lamp
- Interior lamp automatic-shutdown
- Door-ajar warning lamp

POSSIBLE CAUSES

- Malfunction of the driver's door switch
- Malfunction of the ETACS-ECU
- Damaged harness wires and connectors

DIAGNOSIS PROCEDURE

Step 1. Check the installation condition.

Check that the front door switch (RH) is installed on the body correctly.

Q: Is the check result normal?

YES : Go to Step 2.

NO : Correct the installation condition.

Step 2. Connector check: D-02 front door switch (RH) connector

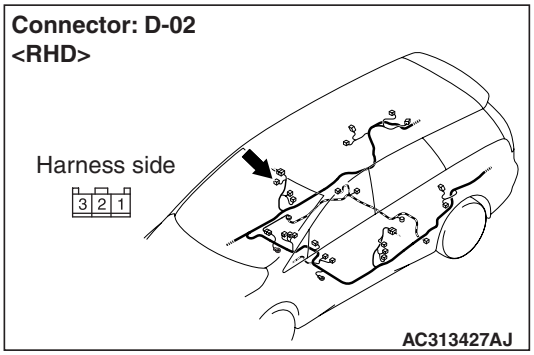

Q: Is the check result normal?
YES : Go to Step 3.
NO : Repair the defective connector.

Step 3. Check the front door switch (RH).

Refer to GROUP 42 – Door P.42-36.

Q: Is the check result normal?
YES : Go to Step 4.
NO : Replace the front door switch (RH).

Step 4. Connector check: C-219 ETACS-ECU connector

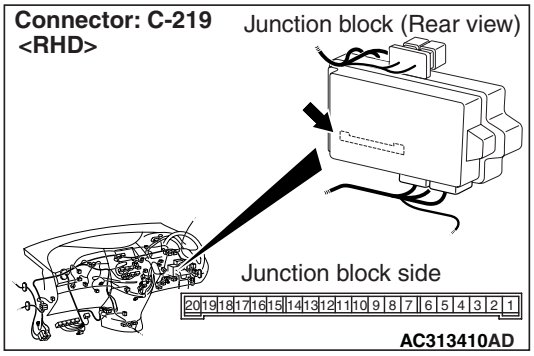

Q: Is the check result normal?
YES : Go to Step 5.
NO : Repair the defective connector.

Step 5. Check the wiring harness between D-02 front door switch (RH) connector terminal No.1 and C-219 ETACS-ECU connector terminal No.10.

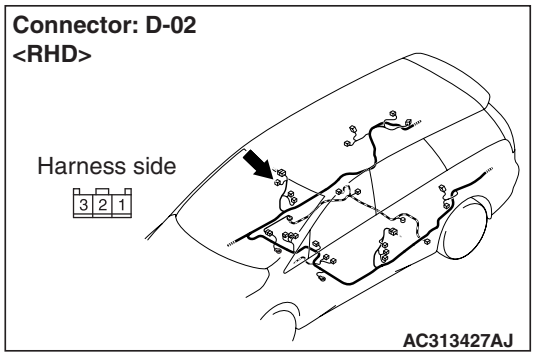

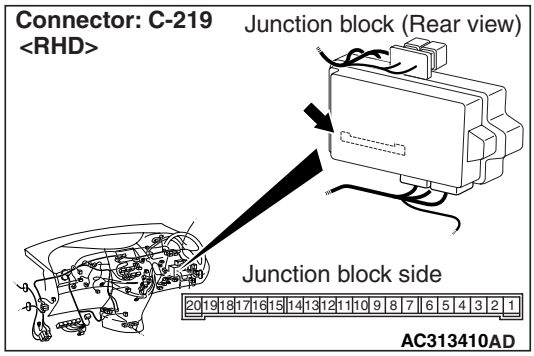

NOTE:

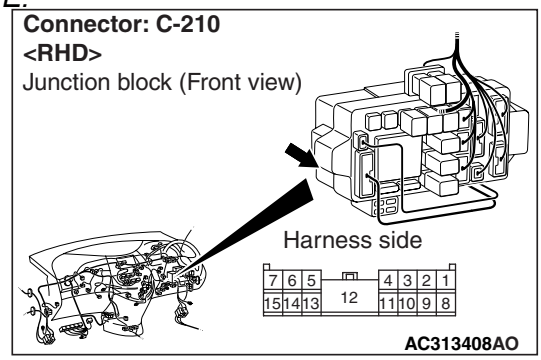

Prior to the wiring harness inspection, check joint connector C-210, and repair if necessary.

- Check the input line for open circuit.

Q: Is the check result normal?
YES : Go to Step 6.
NO : Repair the wiring harness.

Main Index
Group TOC

Step 6. SWS monitor data list.

<Selected item> ETACS ECU

- Driver's door: open

Item No.	Item name	Normal condition
Item 32	DR DOOR SW	ON

OK: Normal condition is displayed.

Q: Is the check result normal?

YES : The trouble can be an intermittent malfunction (Refer to GROUP 00 – How to Cope with Intermittent Malfunction P.00-5).

NO : Replace the ETACS-ECU.

INSPECTION PROCEDURE P-6: The column switch (lighting, turn-signal lamp switch) signal is not received.

⚠ CAUTION

Whenever the ECU is replaced, ensure that the input signal circuit is normal.

Lighting Switch Input Circuit <LHD>

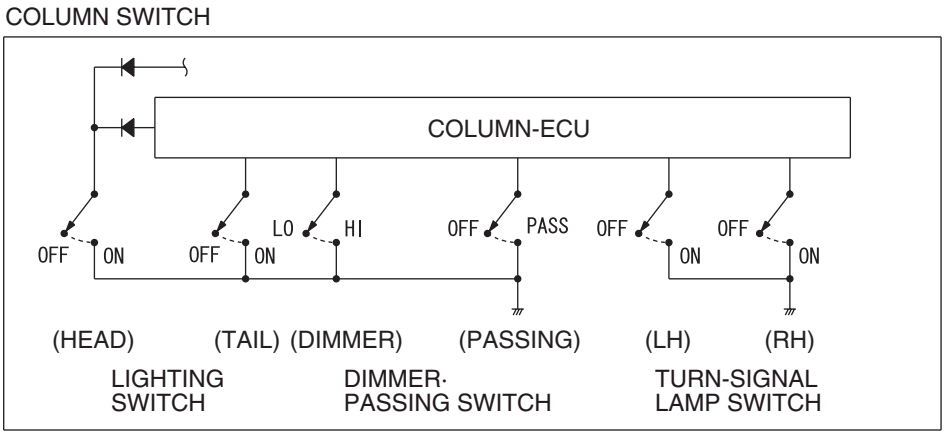

W4X54X103A

Main Index
Group TOC

Lighting Switch Input Circuit <RHD>

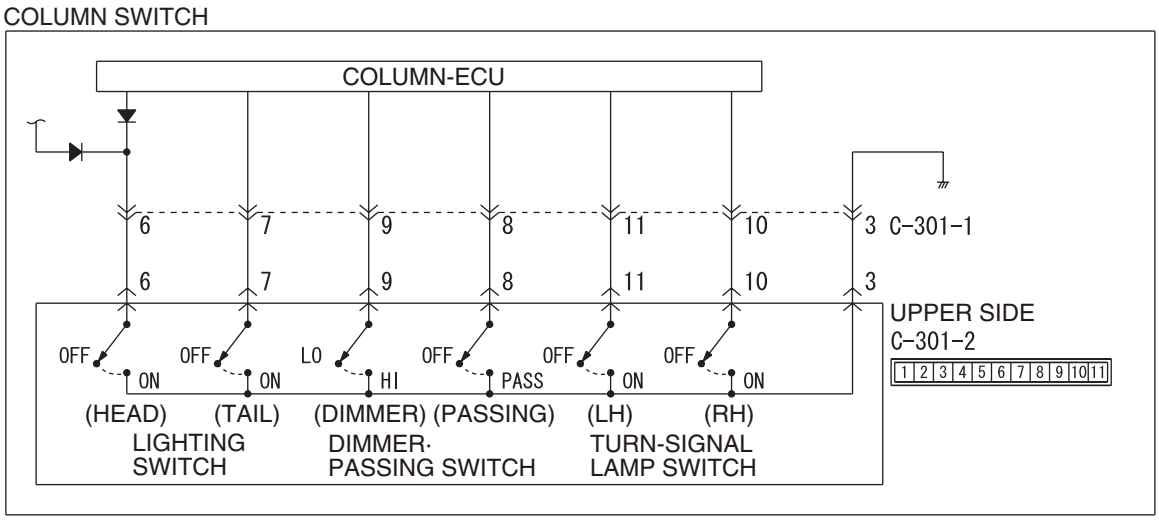

W4X54X108A

COMMENTS ON TROUBLE SYMPTOM

Input signal from the column switch (lighting, turn-signal lamp switch) is used to operate the functions below. If the signal is abnormal, these functions will not work normally.

- Lamp reminder function
- Headlamp washer
- Headlamp and tail lamp
- Headlamp automatic-shutdown function
- Front and rear fog lamp
- Turn signal lamp

POSSIBLE CAUSES

- Malfunction of the column switch
- Damaged harness wires and connectors

DIAGNOSIS PROCEDURE

Step 1. Check the vehicle model for which no column switch (lighting, turn-signal lamp switch) signal is received.

Q: Which vehicle model does not input any column switch (lighting, turn-signal lamp switch) signal, LHD or RHD?
<LH drive vehicles> : Go to Step 2.
<RH drive vehicles> : Go to Step 6.

Step 2. Check the column switch connector.
Check that the wiper and washer switch connector, the lighting switch connector and the switch body connector are in good condition.

Q: Is the check result normal?
YES : Go to Step 3.
NO : Repair the defective connector.

Step 3. Check the column switch (lighting switch and switch body).
Refer to GROUP 54A – Column switch P.54A-212.

Q: Is the check result normal?
YES : Go to Step 4.
NO : Replace the column switch.

Step 4. ECU check by using the SWS monitor
Check that the power supply and earth lines to the column switch (column-ECU) and the SWS communication lines are normal.

- Ignition switch: OFF

ECUS TO BE CHECKED

- COLUMN ECU

OK: "OK" is displayed on the "COLUMN ECU" menu.

Q: Is the check result normal?
YES : Go to Step 5.
NO : Refer to Inspection Procedure A-2 "Communication with column switch (column-ECU) is not possible P.54C-45."

Main Index
Group TOC

Step 5. SWS monitor data list

<Selected item> COLUMN ECU

- Operate each function of the switch.

Item No.	Item name	Normal condition
Item 00	HEADLAMP SW	ON
Item 01	TAIL LAMP SW	ON
Item 02	DIMMER SW	ON
Item 03	PASSING SW	ON
Item 10	TURN SIG.RH	ON
Item 11	TURN SIG.LH	ON

OK: Normal conditions are displayed for all the functions of the switch.

Q: Is the check result normal?

YES : The trouble can be an intermittent malfunction (Refer to GROUP 00 – How to Cope with Intermittent Malfunction P.00-5).

NO : Replace the column switch.

Step 6. ECU check by using the SWS monitor

Check that the power supply and earth lines to the column switch (column-ECU) and the SWS communication lines are normal.

- Ignition switch: OFF

ECUS TO BE CHECKED

- COLUMN ECU

OK: "OK" is displayed on the "COLUMN ECU" menu.

Q: Is the check result normal?

YES : Go to Step 7.

NO : Refer to Inspection Procedure A-2 "Communication with column switch (column-ECU) is not possible P.54C-45."

Step 7. SWS monitor data list

<Selected item> COLUMN ECU

- Operate each function of the switch.

Item No.	Item name	Normal condition
Item 00	HEADLAMP SW	ON
Item 01	TAIL LAMP SW	ON
Item 02	DIMMER SW	ON
Item 03	PASSING SW	ON
Item 10	TURN SIG.RH	ON
Item 11	TURN SIG.LH	ON

OK: Normal conditions are displayed for all the functions of the switch.

Q: Is the check result normal?

YES : The trouble can be an intermittent malfunction (Refer to GROUP 00 – How to Cope with Intermittent Malfunction P.00-5).

NO : Replace the column switch.

Main Index
Group TOC

INSPECTION PROCEDURE P-7: The column switch (windshield wiper washer and rear wiper washer switch) signal is not received.

⚠ CAUTION
Whenever the ECU is replaced, ensure that the input signal circuit is normal.

Windshield Wiper and Washer Switch Input Circuit <LHD>

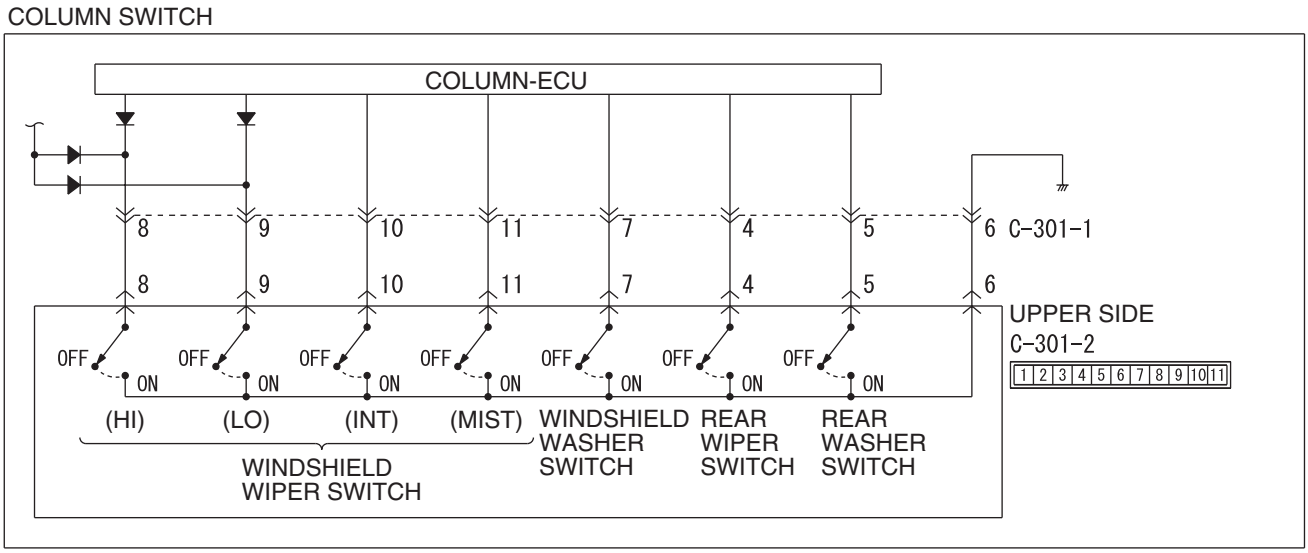

W4X54X105A

Windshield Wiper and Washer Switch Input Circuit <RHD>

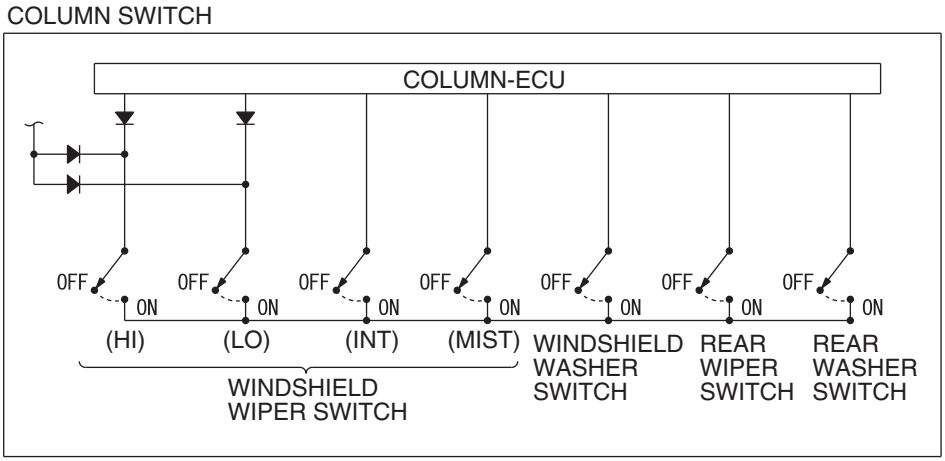

W4X54X106A

COMMENTS ON TROUBLE SYMPTOM

Input signal from the column switch (wiper switch) is used to operate the functions below. If the signal is abnormal, these functions will not work normally.

- Windshield wiper and washer
- Rear wiper and washer
- Headlamp washer

POSSIBLE CAUSES

- Malfunction of the column switch
- Damaged harness wires and connectors

Main Index
Group TOC

DIAGNOSIS PROCEDURE

Step 1. Check the vehicle model for which no column switch (windshield wiper washer and rear wiper washer switch) signal is received.

Q: Which vehicle model does not send any column switch (windshield wiper washer and rear wiper washer switch) signal, LHD or RHD?
<LH drive vehicles> : Go to Step 2.
<RH drive vehicles> : Go to Step 4.

Step 2. ECU check by using the SWS monitor
Check that the power supply and earth lines to the column switch (column-ECU) and the SWS communication lines are normal.
- Ignition switch: OFF

ECUS TO BE CHECKED
- COLUMN ECU

OK: "OK" is displayed on the "COLUMN ECU" menu.

Q: Is the check result normal?
YES : Go to Step 3.
NO : Refer to Inspection Procedure A-2 "Communication with column switch (column-ECU) is not possible P.54C-45."

Step 3. SWS monitor data list.

<Selected item> COLUMN ECU
Operate each function of the switch.

Item No.	Item name	Normal condition
Item 05	INT WIPER SW	ON
Item 06	LO WIPER SW	ON
Item 07	HI WIPER SW	ON
Item 08	MIST WIPER SW	ON
Item 09	FRONT WASH.SW	ON
Item 13	REAR WIPER SW	ON
Item 14	REAR WASH.SW	ON

OK: Normal conditions are displayed for all the functions of the switch.

Q: Is the check result normal?
YES : The trouble can be an intermittent malfunction (Refer to GROUP 00 – How to Cope with Intermittent Malfunction P.00-5).
NO : Replace the column switch.

Step 4. Check the column switch connector.
Check that the wiper and washer switch connector, the lighting switch connector and the switch body connector are in good condition.

Q: Is the check result normal?
YES : Go to Step 5.
NO : Repair the defective connector.

Step 5. Check the column switch (wiper switch and switch body).
Refer to GROUP 54A – Column switch P.54A-212.

Q: Is the check result normal?
YES : Go to Step 6.
NO : Replace the column switch.

Step 6. ECU check by using the SWS monitor
Check that the power supply and earth lines to the column switch (column-ECU) and the SWS communication lines are normal.
- Ignition switch: OFF

ECUS TO BE CHECKED
- COLUMN ECU

OK: "OK" is displayed on the "COLUMN ECU" menu.

Q: Is the check result normal?
YES : Go to Step 7.
NO : Refer to Inspection Procedure A-2 "Communication with column switch (column-ECU) is not possible P.54C-45."

Main Index
Group TOC

Step 7. SWS monitor data list.

<Selected item> COLUMN ECU
Operate each function of the switch.

Item No.	Item name	Normal condition
Item 05	INT WIPER SW	ON
Item 06	LO WIPER SW	ON
Item 07	HI WIPER SW	ON
Item 08	MIST WIPER SW	ON
Item 09	FRONT WASH.SW	ON
Item 13	REAR WIPER SW	ON
Item 14	REAR WASH.SW	ON

OK: Normal conditions are displayed for all the functions of the switch.

Q: Is the check result normal?
YES : The trouble can be an intermittent malfunction (Refer to GROUP 00 – How to Cope with Intermittent Malfunction P.00-5).
NO : Replace the column switch.

INSPECTION PROCEDURE P-8: The windshield intermittent wiper volume signal is not received.

⚠ CAUTION
Whenever the ECU is replaced, ensure that the input signal circuit is normal.

Windshield Intermittent Wiper Interval Adjusting Knob Input Circuit <LHD>

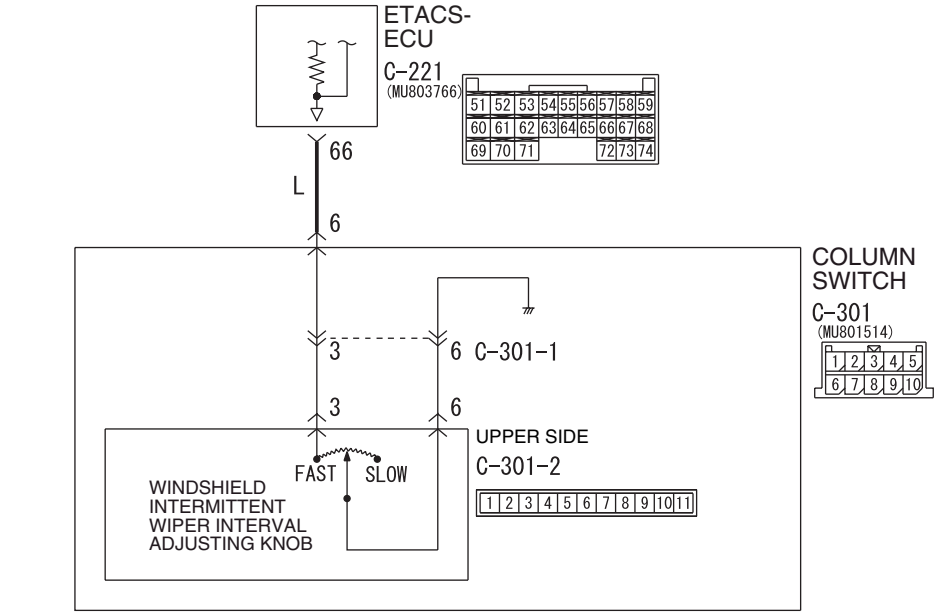

Wire colour code
B : Black LG : Light green G : Green L : Blue W : White Y : Yellow SB : Sky blue
BR : Brown O : Orange GR : Gray R : Red P : Pink V : Violet

W4X54X126A

Main Index
Group TOC

Windshield Intermittent Wiper Interval Adjusting Knob Input Circuit <RHD>

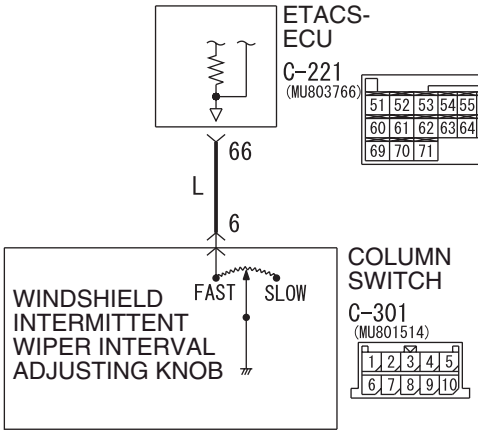

Wire colour code
B : Black LG : Light green G : Green L : Blue W : White Y : Yellow SB : Sky blue
BR : Brown O : Orange GR : Gray R : Red P : Pink V : Violet

W4X54X127A

COMMENTS ON TROUBLE SYMPTOM

The intermittent wiper interval is calculated in accordance with the input signal from the windshield intermittent wiper volume. If this signal is abnormal, the wiper interval can not be adjusted.

POSSIBLE CAUSES

- Malfunction of the column switch
- Malfunction of the ETACS-ECU
- Damaged harness wires and connectors

DIAGNOSIS PROCEDURE

Step 1. Connector check: C-301 column switch connector.

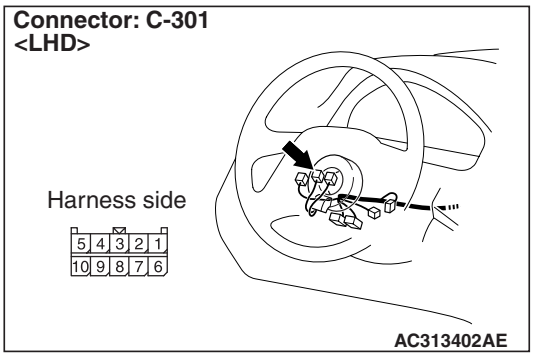

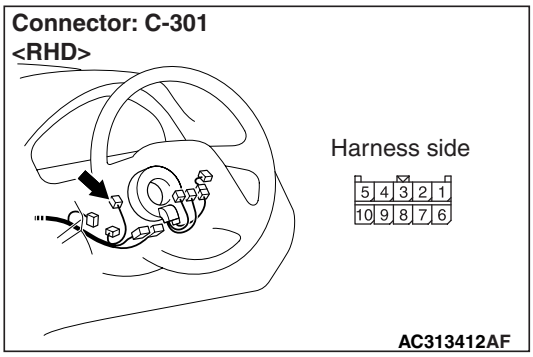

Q: Is the check result normal?

YES : Go to Step 2.

NO : Repair the defective connector.

Step 2. Resistance measurement at the C-301 column switch connector.

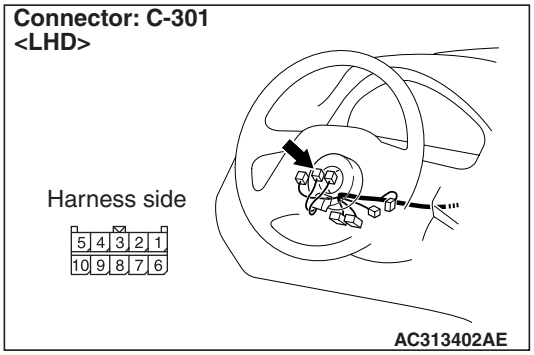

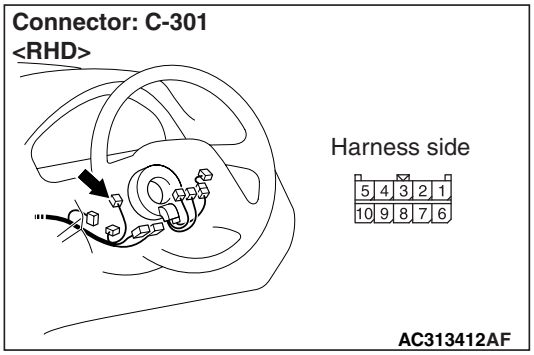

(1) Disconnect the connector, and measure at the column switch side.

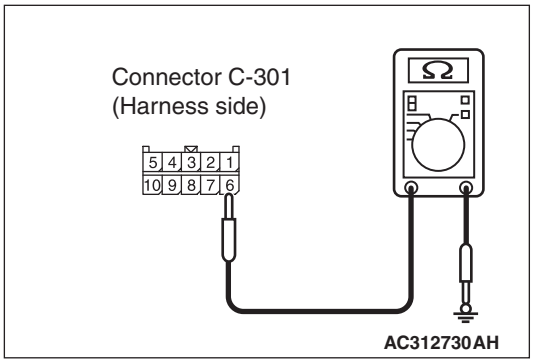

(2) Resistance between C-301 column switch connector terminal No.6 and body earth

OK: The resistance should rise from 0 to 1 kΩ when the windshield intermittent wiper volume is rotated from "Fast" to "Slow".

Q: Is the check result normal?
YES : Go to Step 3.
NO : Replace the column switch.

Step 3. Connector check: C-221 ETACS-ECU connector.

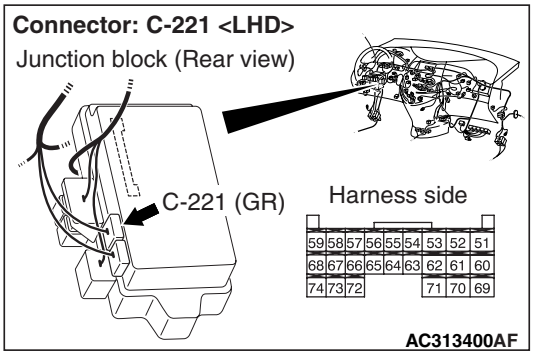

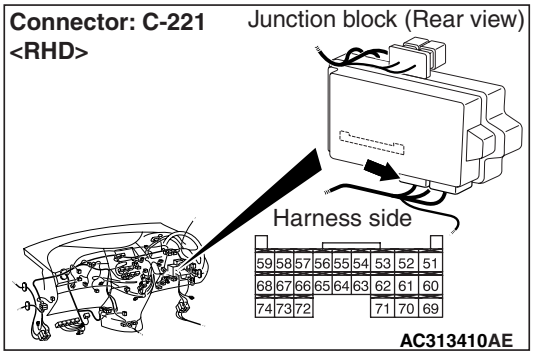

Q: Is the check result normal?
YES : Go to Step 4.
NO : Repair the defective connector.

Main Index
Group TOC

Step 4. Check the wiring harness between C-301 column switch connector terminal No.6 and C-221 ETACS-ECU connector terminal No.66.

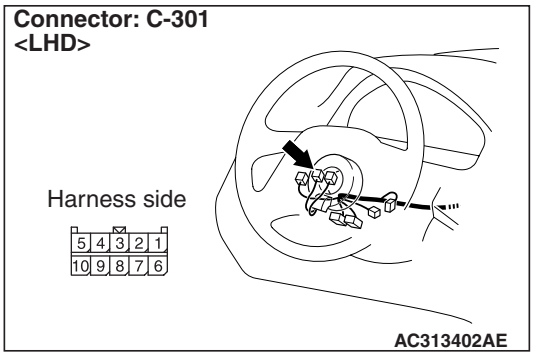

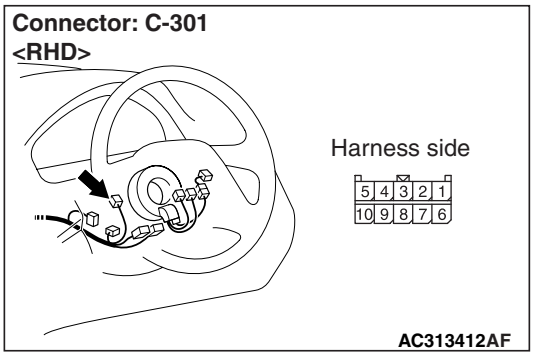

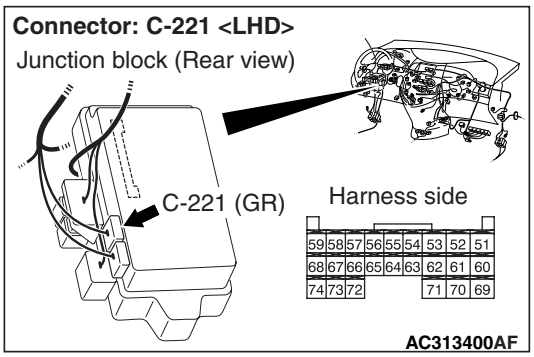

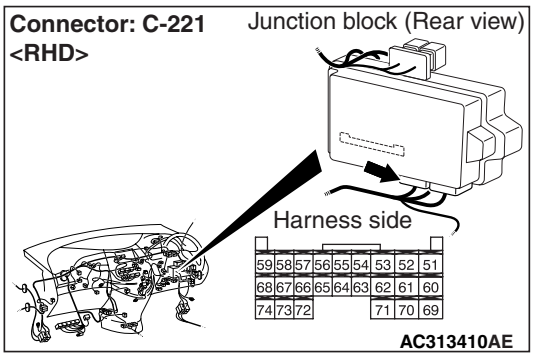

- Check the input line for open circuit.

Q: Is the check result normal?

YES : Go to Step 5.

NO : Repair the wiring harness.

Step 5. SWS monitor data list.

<Selected item> ETACS ECU

- Ignition switch: ACC
- Wiper switch: INT

Item No.	Item name	Normal condition
Item 37	INT WIPE TIME	4.6 – 32.0 s

OK: The display will be changed as the intermittent wiper volume is rotated.

Q: Is the check result normal?

YES : The trouble can be an intermittent malfunction (Refer to GROUP 00 – How to Cope with Intermittent Malfunction P.00-5).

NO : Replace the ETACS-ECU.

Main Index
Group TOC

INSPECTION PROCEDURE P-9: When the sunroof switch is operated, the switch signals are not received.

⚠ CAUTION

Whenever the ECU is replaced, ensure that the input signal circuit is normal.

Sunroof Switch Input Circuit <LHD>

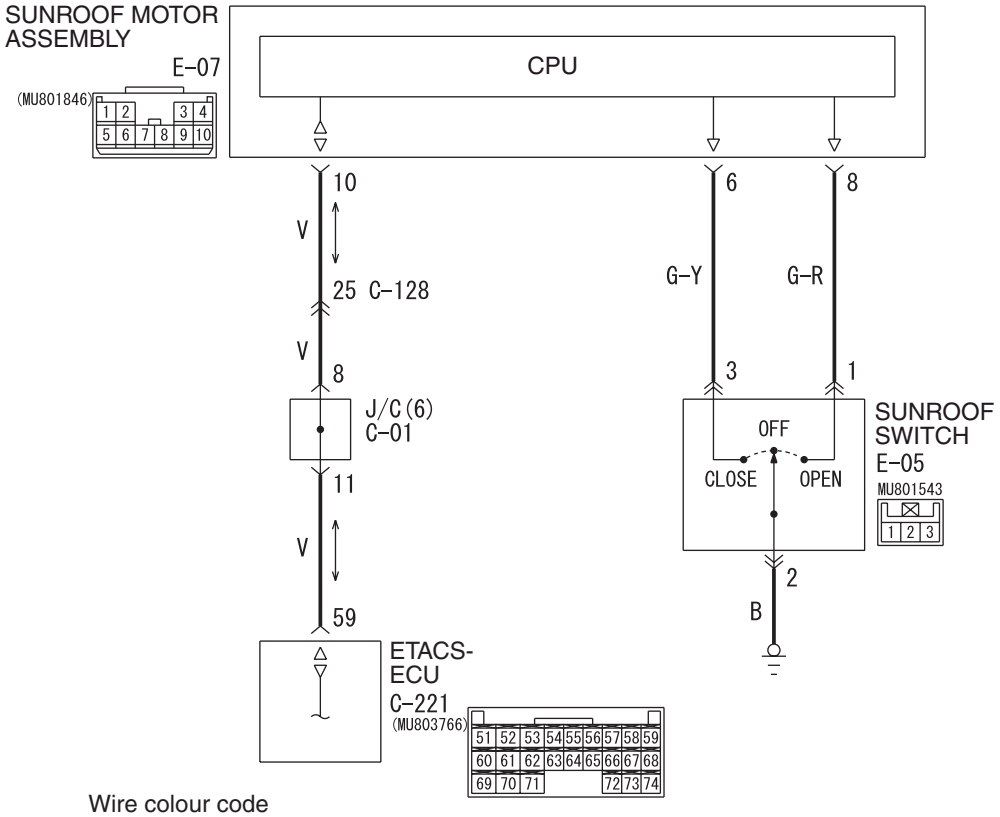

Wire colour code
B : Black LG : Light green G : Green L : Blue W : White Y : Yellow SB : Sky blue
BR : Brown O : Orange GR : Gray R : Red P : Pink V : Violet

W4X54E126A

Main Index
Group TOC

Sunroof Switch Input Circuit

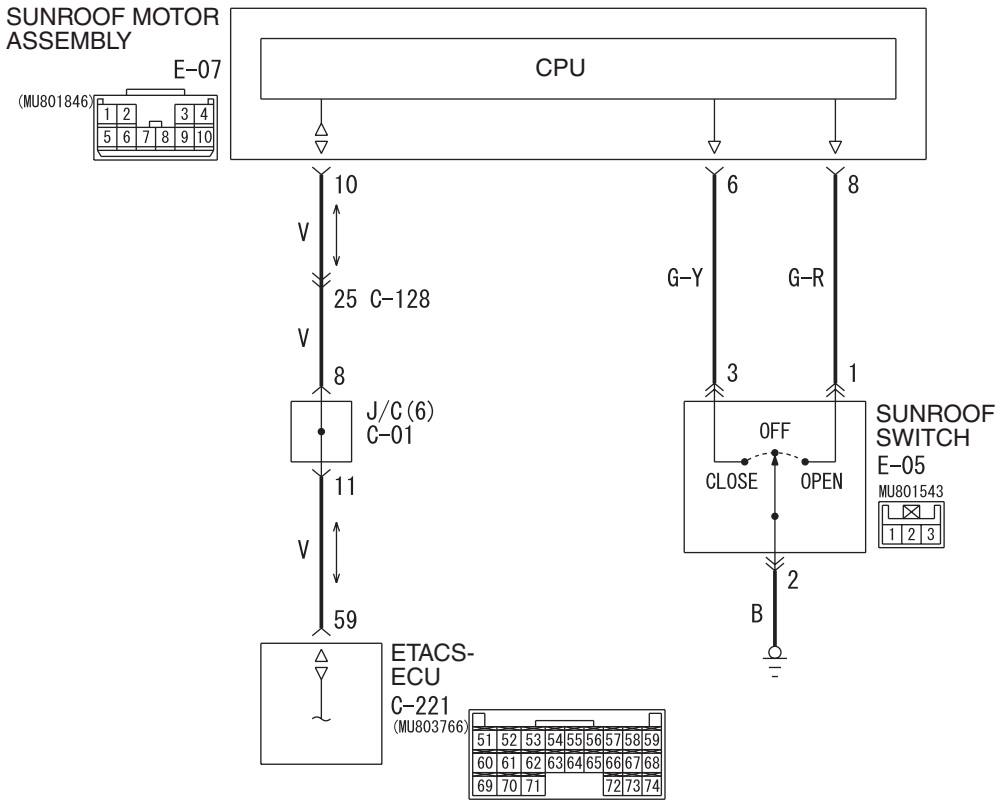

Wire colour code
B : Black LG : Light green G : Green L : Blue W : White Y : Yellow SB : Sky blue
BR : Brown O : Orange GR : Grey R : Red P : Pink V : Violet PU : Purple

W6X54X021A

COMMENTS ON TROUBLE SYMPTOM

If the input signal from the sunroof switch is abnormal, the sunroof input check response signal will not be sent to the SWS communication line.

POSSIBLE CAUSES

- Malfunction of the sunroof assembly
- Malfunction of the sunroof switch
- Damaged harness wires and connectors

DIAGNOSIS PROCEDURE

Step 1. ECU check on the SWS monitor

Check that the power supply and earth lines to the sunroof-ECU and the SWS communication lines are normal.

- Ignition switch: ON

ECUS TO BE CHECKED

- Sunroof-ECU

OK: "OK" is displayed on the "sunroof-ECU" menu.

Q: Is the check result normal?

YES : Go to Step 2.

NO : Refer to Inspection Procedure A-5 "Communication with the sunroof motor assembly (sunroof-ECU) is not possible P.54C-63."

Step 2. Connector check: E-05 sunroof switch connector

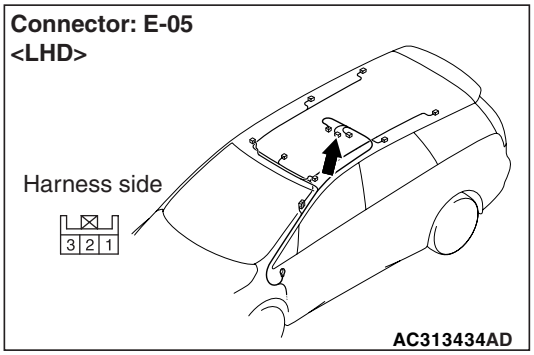

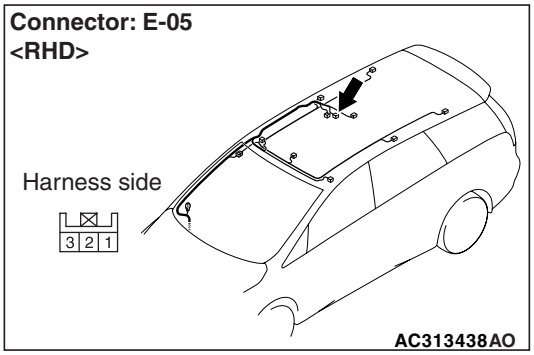

Q: Is the check result normal?
YES : Go to Step 3.
NO : Repair the defective connector.

Step 3. Check the sunroof switch.

Refer to GROUP 42 – Sunroof P.42-78.

Q: Is the check result normal?
YES : Go to Step 4.
NO : Replace the sunroof switch.

Step 4. Resistance measurement at the E-05 sunroof switch connector.

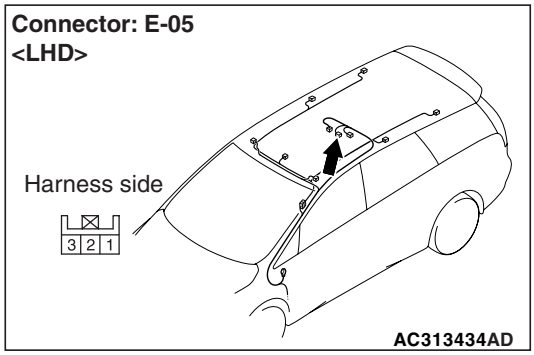

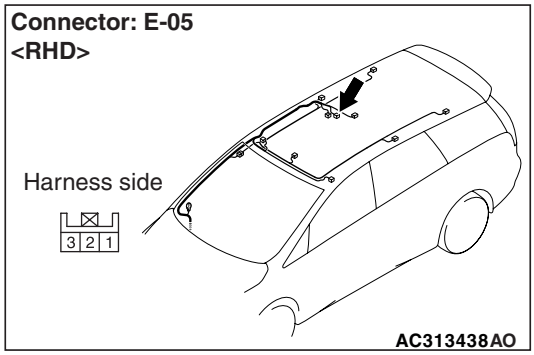

(1) Disconnect the connector, and measure at the wiring harness side.

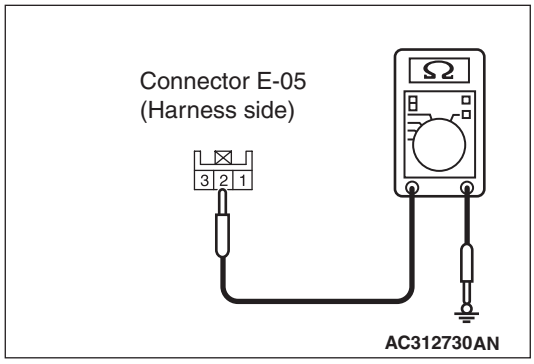

(2) Continuity between E-05 sunroof switch connector terminal No.2 and body earth

OK: 2Ω or less

Q: Is the check result normal?
YES : Go to Step 6.
NO : Go to Step 5.

Main Index
Group TOC

Step 5. Check the wiring harness between E-05 sunroof motor switch connector terminal No.2 and body earth.

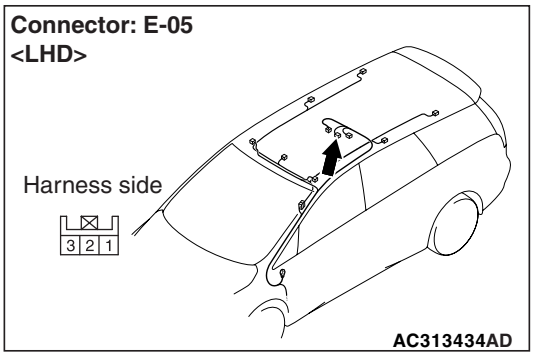

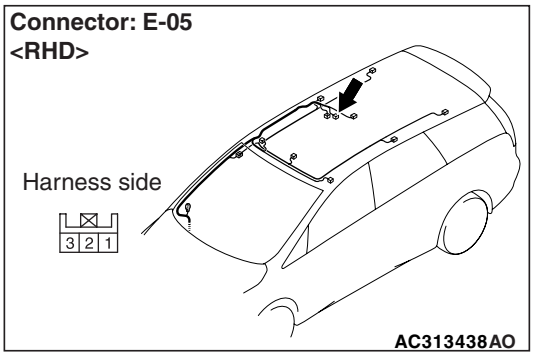

- Check the earth wires for open circuit.

Q: Is the check result normal?

YES : The trouble can be an intermittent malfunction (Refer to GROUP 00 – How to Cope with Intermittent Malfunction P.00-5).

NO : Repair the wiring harness.

Step 6. Connector check: E-07 sunroof motor assembly connector

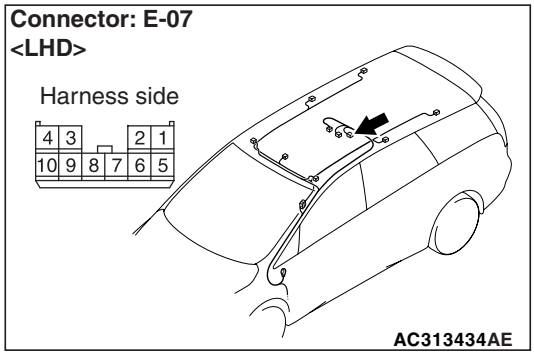

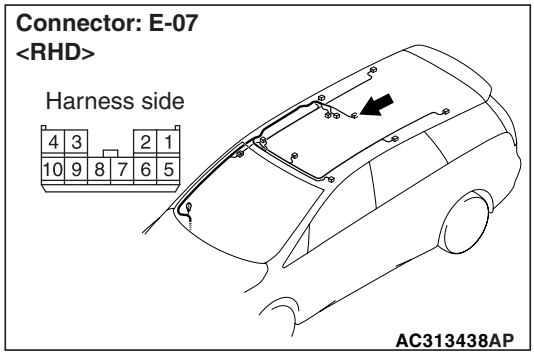

Q: Is the check result normal?

YES : Go to Step 7.

NO : Repair the defective connector.

Main Index
Group TOC

Step 7. Check the wiring harness from E-07 sunroof motor assembly connector terminal Nos. 6 and 8 to E-05 sunroof switch connector terminal Nos. 3 and 1.

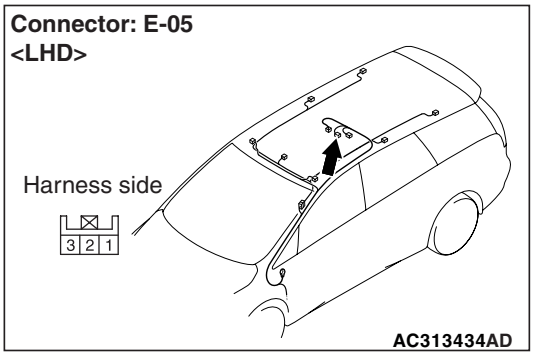

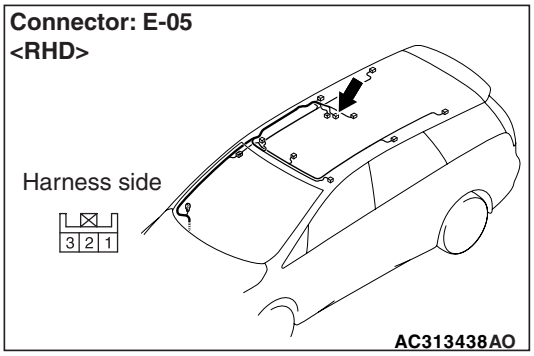

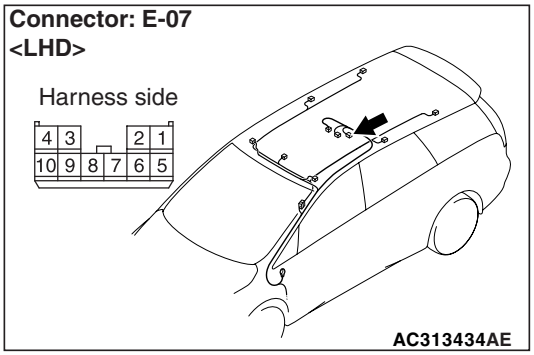

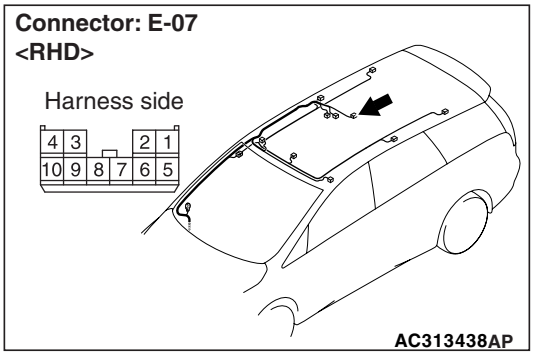

- Check the input line for open circuit.

Q: Is the check result normal?
YES : Go to Step 8.
NO : Repair the wiring harness.

Step 8. SWS monitor data list.

<Selected item> SUNROOF ECU

- Operate the sunroof switch.

Item No.	Item name	Normal condition
Item 72	S/R ECU ACK	INPUT CHECK (only momentarily when switch is operated)

OK: Normal condition is displayed.

Q: Is the check result normal?
YES : The trouble can be an intermittent malfunction (Refer to GROUP 00 – How to Cope with Intermittent Malfunction P.00-5).
NO : Replace the sunroof motor assembly.

Main Index
Group TOC

INSPECTION PROCEDURE P-10: The key reminder switch signal is not received.

⚠ CAUTION

Whenever the ECU is replaced, ensure that the input signal circuit is normal.

Key Reminder Switch Input Circuit

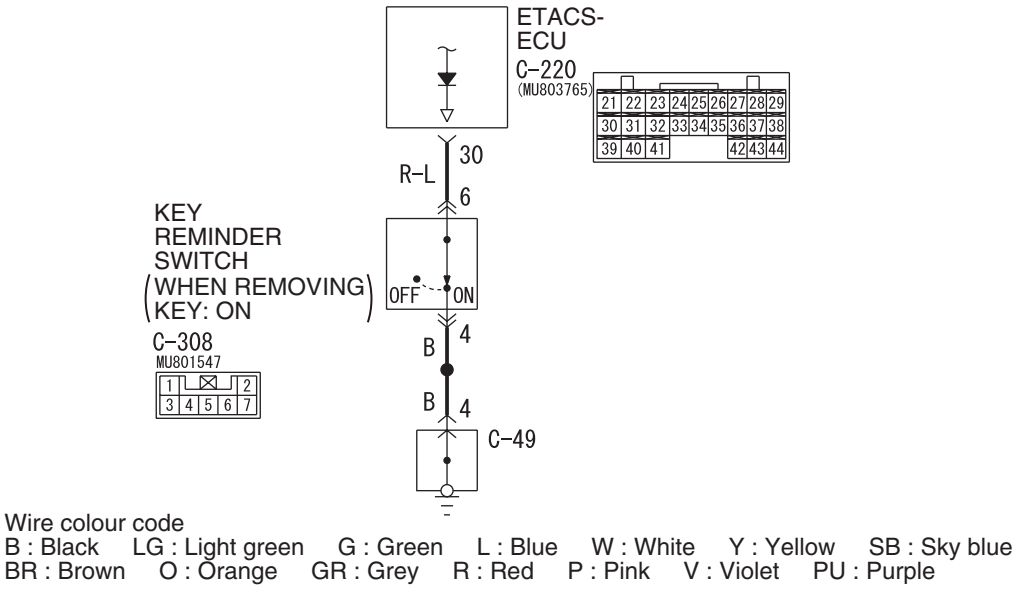

COMMENTS ON TROUBLE SYMPTOM

Input signal from the key reminder switch is used to operate the functions below. If the signal is abnormal, these functions will not work normally.

- Keyless entry system
- Keyless entry hazard answerback
- Ignition key cylinder illumination lamp
- Interior lamps

POSSIBLE CAUSES

- Malfunction of the key reminder switch
- Malfunction of the ETACS-ECU
- Damaged harness wires and connectors

Main Index
Group TOC

DIAGNOSIS PROCEDURE

Step 1. Connector check: C-308 key reminder switch connector

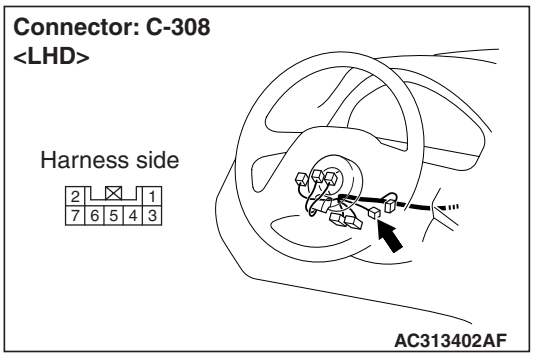

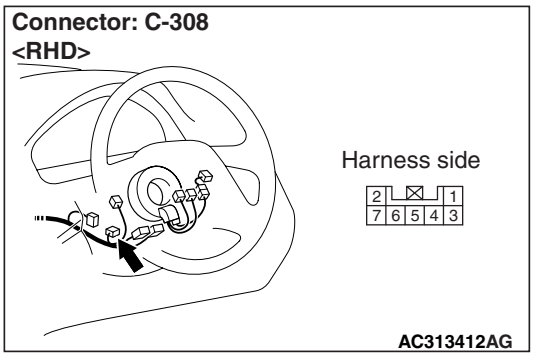

Q: Is the check result normal?
YES : Go to Step 2.
NO : Repair the defective connector.

Step 2. Check the key reminder switch.

Refer to GROUP 54A – Ignition switch P.54A-49.

Q: Is the check result normal?
YES : Go to Step 3.
NO : Replace the key reminder switch.

Step 3. Resistance measurement at the C-308 key reminder switch connector.

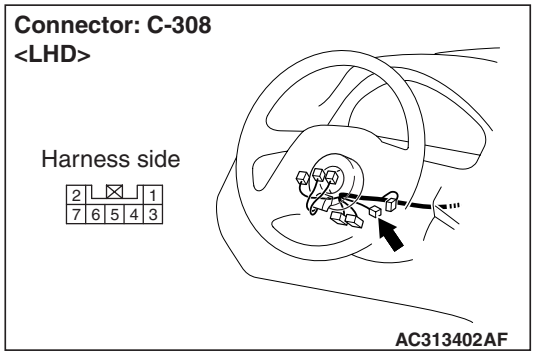

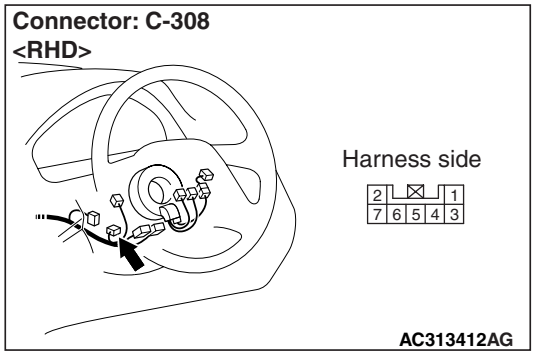

(1) Disconnect the connector, and measure at the wiring harness side.

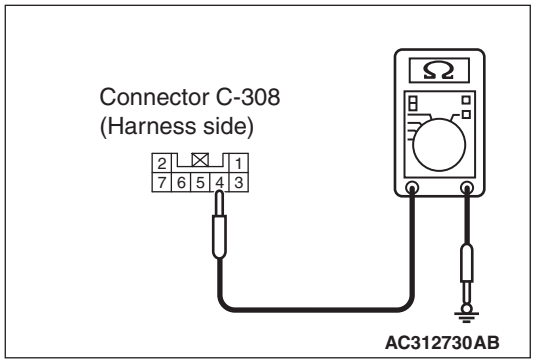

(2) Resistance between C-308 key reminder switch connector terminal No.4 and body earth

OK: 2 Ω or less

Q: Is the check result normal?
YES : Go to Step 6.
NO : Go to Step 4.

Main Index
Group TOC

Step 4. Connector check: C-49 earth connector

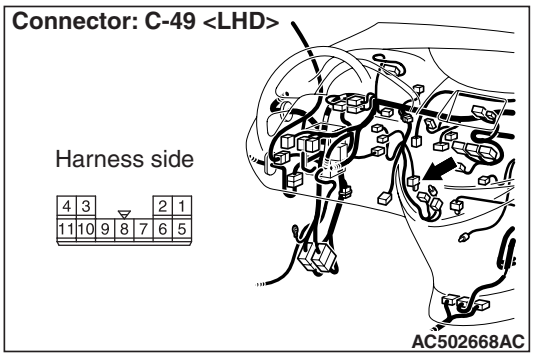

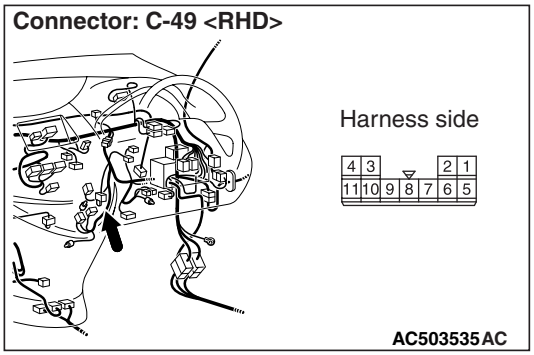

Q: Is the check result normal?
YES : Go to Step 5.
NO : Repair the connector.

Step 5. Check the wiring harness between C-308 key reminder switch connector terminal No.4 and the C-49 earth connector terminal No.4.

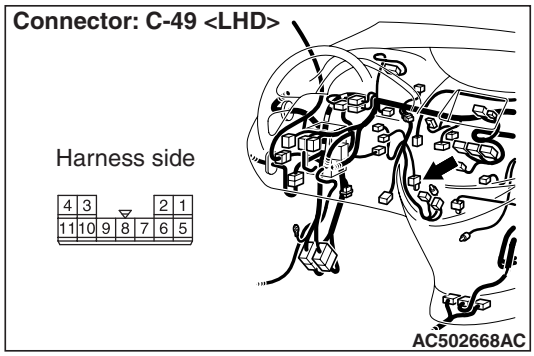

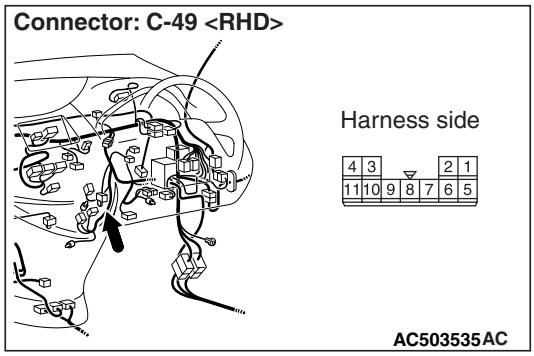

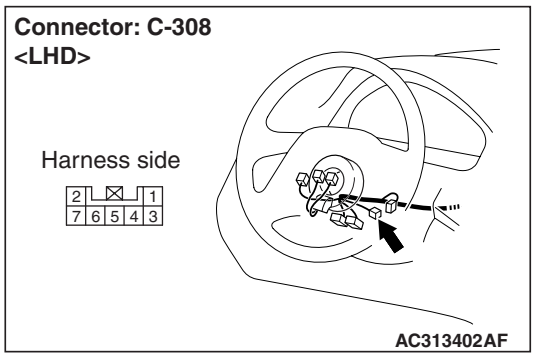

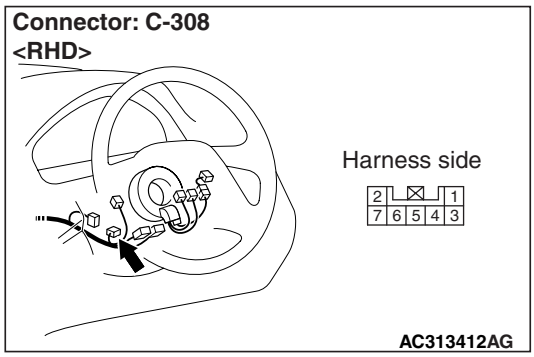

- Check the earth wires for open circuit.

Q: Is the check result normal?
YES : The trouble can be an intermittent malfunction (Refer to GROUP 00 – How to Cope with Intermittent Malfunction P.00-5).
NO : Repair the wiring harness.

Step 6. Connector check: C-220 ETACS-ECU connector

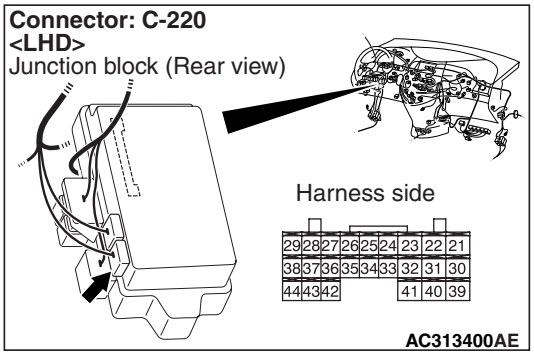

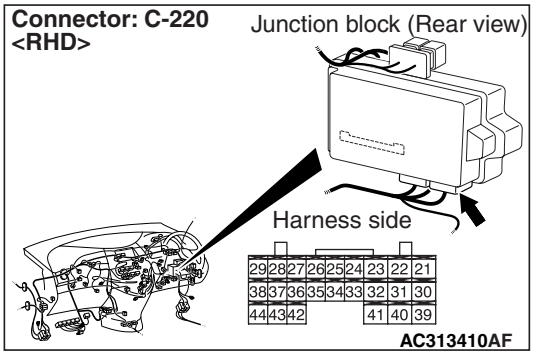

Q: Is the check result normal?

YES : Go to Step 7.

NO : Repair the defective connector.

Step 7. Check the wiring harness between C-308 key reminder switch connector terminal No.6 and C-220 ETACS-ECU connector terminal No.30.

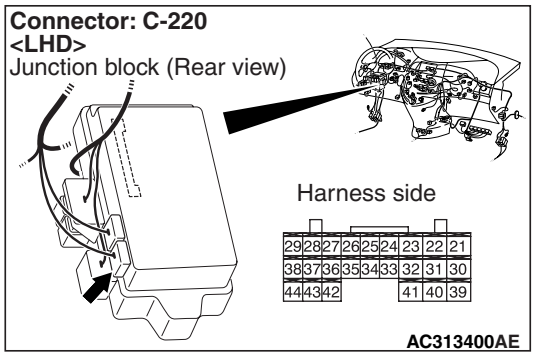

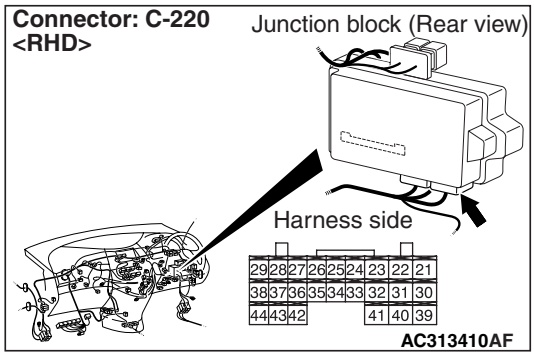

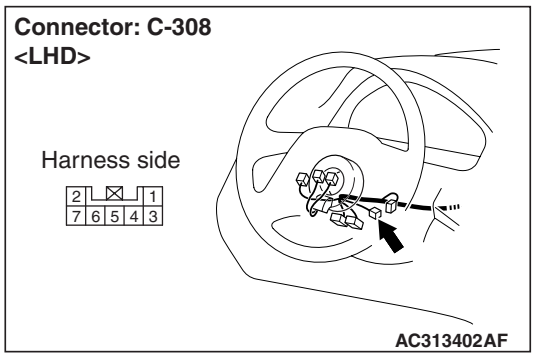

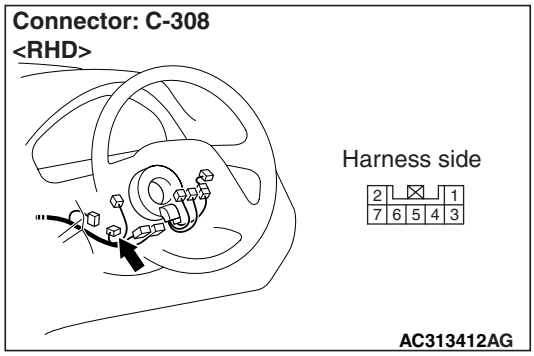

- Check the input line for open circuit.

Q: Is the check result normal?

YES : Go to Step 8.

NO : Repair the wiring harness.

Main Index
Group TOC

Step 8. ETACS switch data by using the SWS monitor

Check the input signal from the key reminder switch.

- Key reminder switch: OFF (key inserted) to ON (key removed)

Item No.	Item name	Normal condition
Item 03	Key reminder switch	from OFF to ON

OK: Normal condition is displayed.

Q: Is the check result normal?

YES : The trouble can be an intermittent malfunction (Refer to GROUP 00 – How to Cope with Intermittent Malfunction P.00-5).

NO : Replace the ETACS-ECU.

INSPECTION PROCEDURE P-11: The hazard warning lamp switch signal is not received.

⚠ CAUTION

Whenever the ECU is replaced, ensure that the input signal circuit is normal.

Hazard Warning Lamp Switch Input Circuit

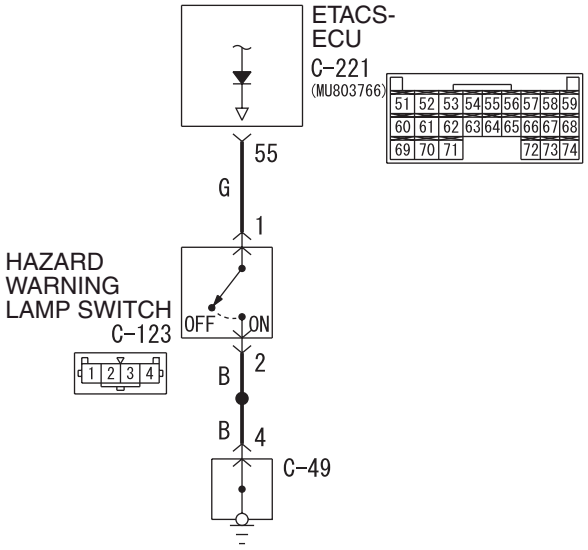

Wire colour code
B : Black LG : Light green G : Green L : Blue W : White Y : Yellow SB : Sky blue
BR : Brown O : Orange GR : Grey R : Red P : Pink V : Violet PU : Purple

W6X54X023A

COMMENTS ON TROUBLE SYMPTOM

Input signal from the hazard warning lamp switch is used to operate the functions below. If the signal is abnormal, these functions will not work normally.

- Turn-signal lamp operation sound
- Keyless entry system (encrypted code registration)
- Keyless entry hazard answerback
- Hazard warning lamp

POSSIBLE CAUSES

- Malfunction of the hazard warning lamp switch
- Malfunction of the ETACS-ECU
- Damaged harness wires and connectors

Main Index
Group TOC

DIAGNOSIS PROCEDURE

Step 1. Connector check: C-123 hazard warning lamp switch connector

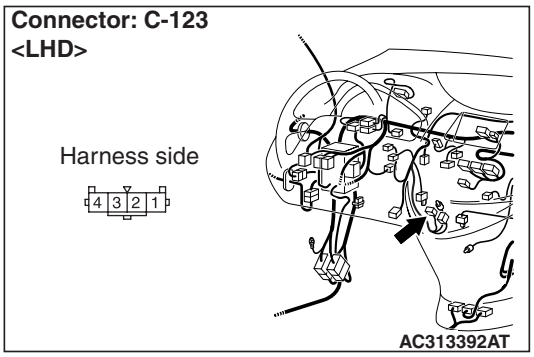

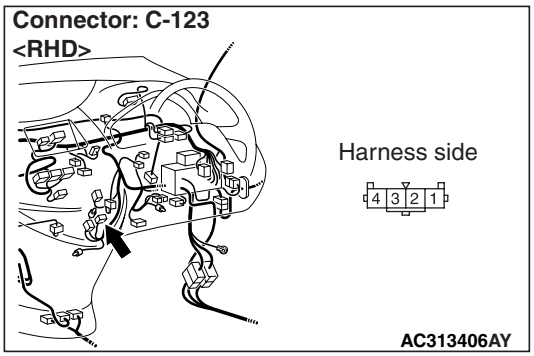

Q: Is the check result normal?
YES : Go to Step 2.
NO : Repair the defective connector.

Step 2. Check the hazard warning lamp switch.

Refer to GROUP 54A – Hazard warning lamp switch P.54A-158.

Q: Is the check result normal?
YES : Go to Step 3.
NO : Replace the hazard warning lamp switch.

Step 3. Resistance measurement at the C-123 hazard warning lamp switch connector.

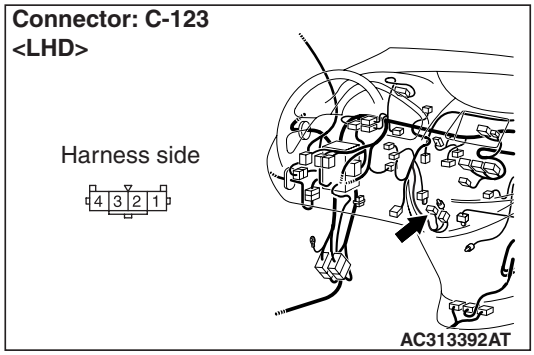

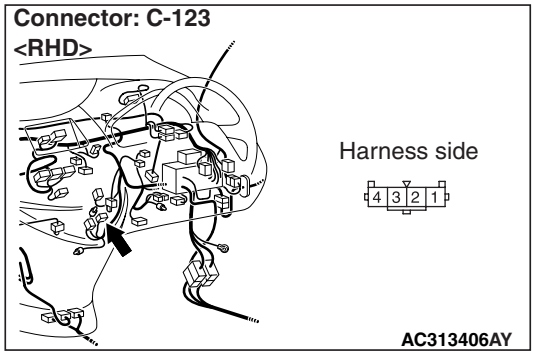

(1) Disconnect the connector, and measure at the wiring harness side.

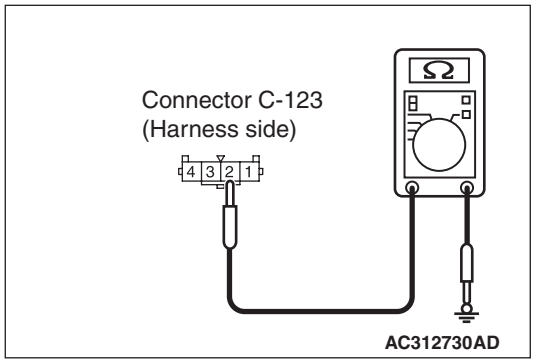

(2) Resistance between C-123 hazard warning lamp switch connector terminal No.2 and body earth

OK: 2 Ω or less

Q: Is the check result normal?
YES : Go to Step 6.
NO : Go to Step 4.

Main Index
Group TOC

Step 4. Connector check: C-49 earth connector

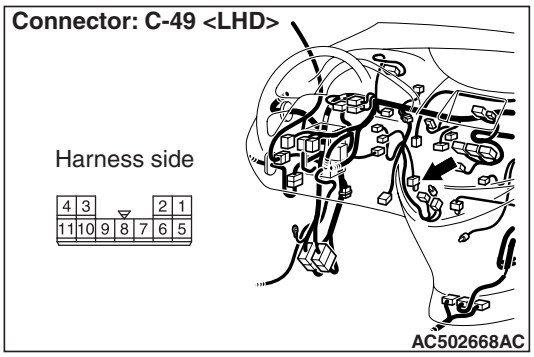

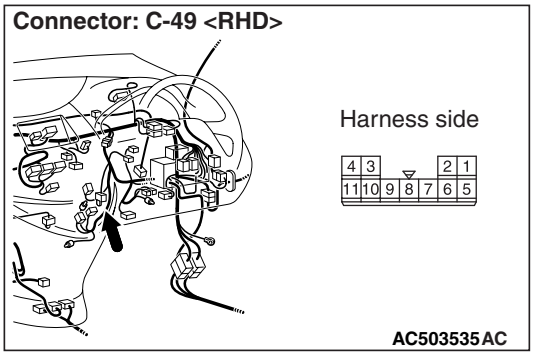

Q: Is the check result normal?

YES : Go to Step 5.

NO : Repair the connector.

Step 5. Check the wiring harness between C-123 hazard warning lamp switch connector terminal No.2 and C-49 earth connector terminal No.4.

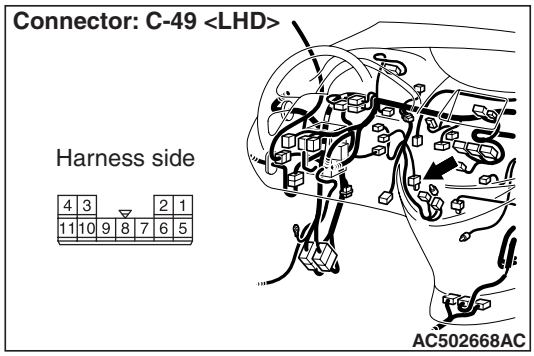

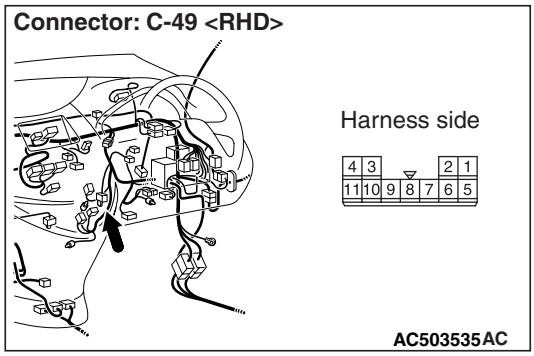

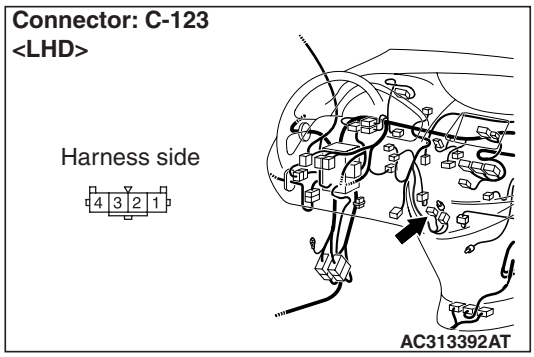

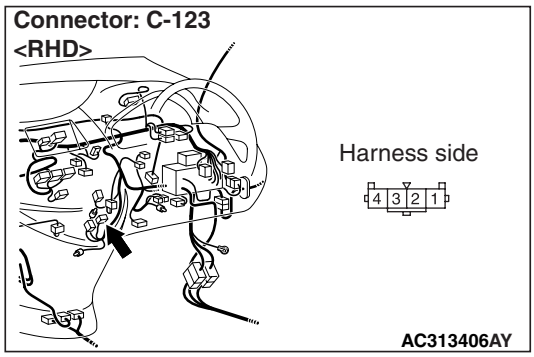

- Check the earth wires for open circuit.

Q: Is the check result normal?

YES : The trouble can be an intermittent malfunction (Refer to GROUP 00 – How to Cope with Intermittent Malfunction P.00-5).

NO : Repair the wiring harness.

Step 6. Connector check: C-221 ETACS-ECU connector

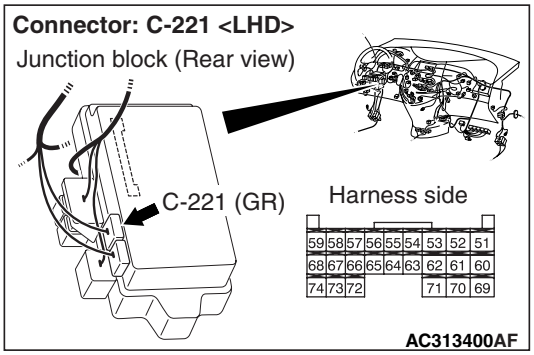

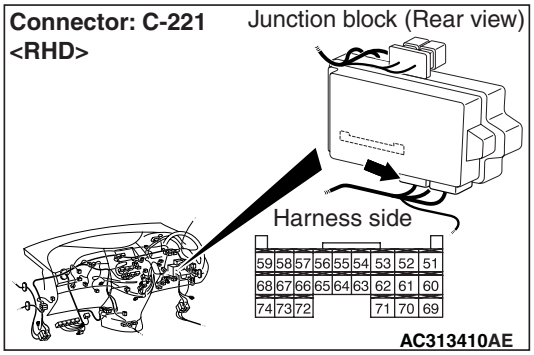

Q: Is the check result normal?
YES : Go to Step 7.
NO : Repair the defective connector.

Step 7. Check the wiring harness between C-221 ETACS-ECU connector terminal No.55 and C-123 hazard warning lamp switch connector terminal No.1.

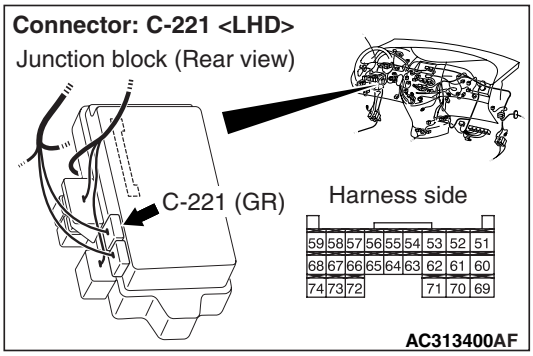

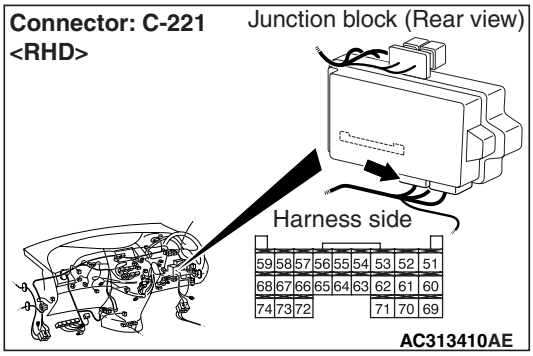

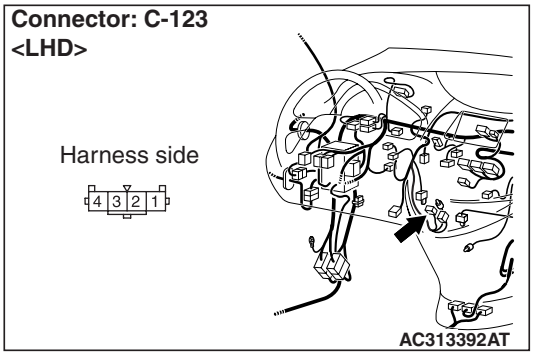

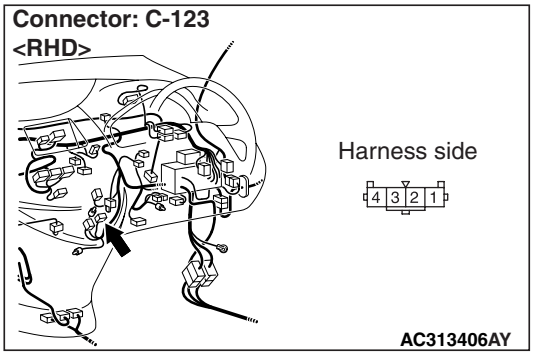

- Check the input line for open circuit.

Q: Is the check result normal?
YES : Go to Step 8.
NO : Repair the wiring harness.

Main Index
Group TOC

Step 8. ETACS switch data by using the SWS monitor

Check the input signal from the hazard warning lamp switch.

- hazard warning lamp switch: from OFF to ON

Item No.	Item name	Normal condition
Item 04	Hazard lamp switch	OFF to ON (only when switch is operated)

OK: Normal condition is displayed.

Q: Is the check result normal?

YES : . The trouble can be an intermittent malfunction (Refer to GROUP 00 – How to Cope with Intermittent Malfunction P.00-5).

NO : . Replace the ETACS-ECU.

Main Index
Group TOC

INSPECTION PROCEDURE P-12: All the door switch signals are not received.

⚠ CAUTION

Whenever the ECU is replaced, ensure that the input signal circuit is normal.

Door Switches Input Circuit <LHD>

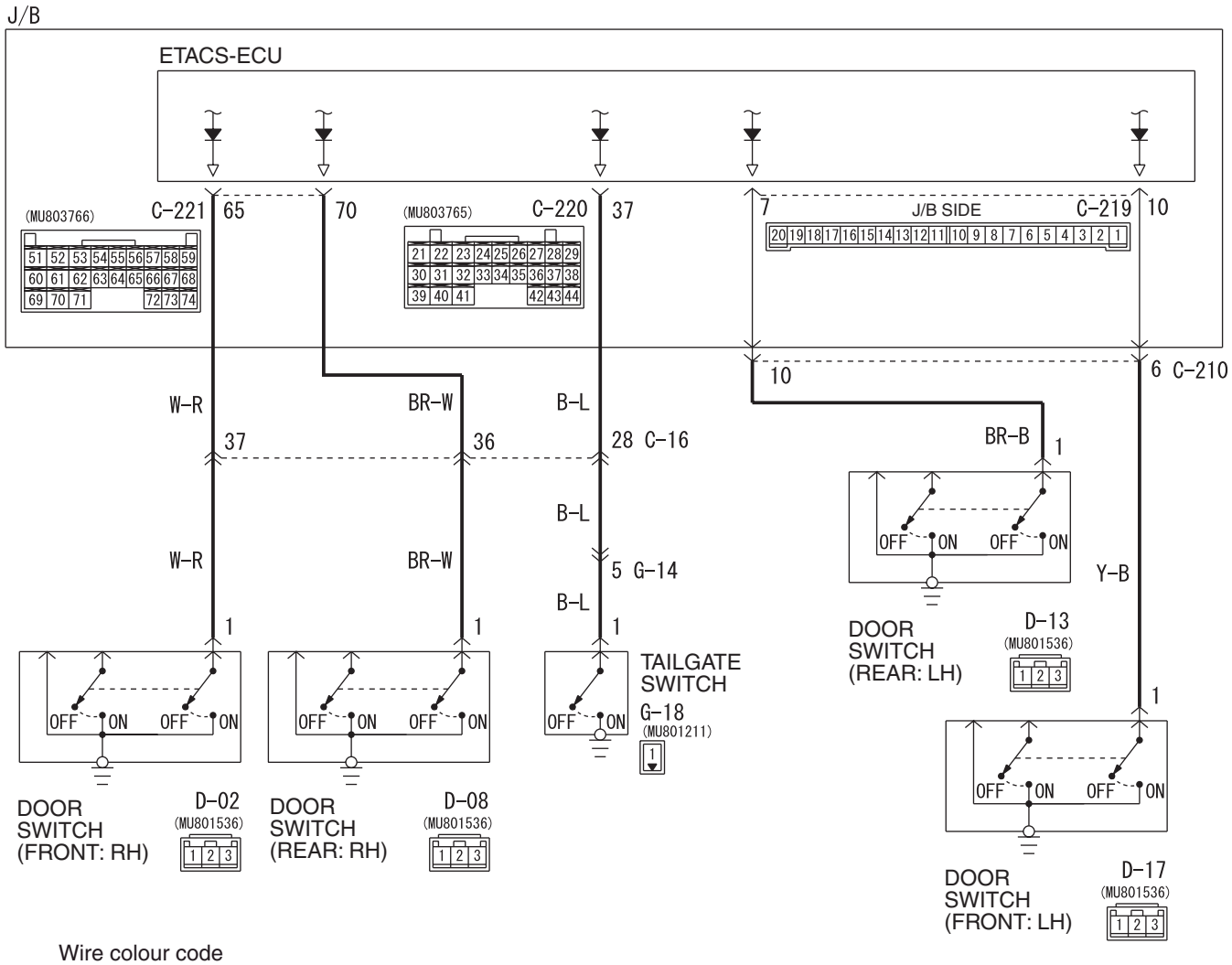

Wire colour code
B : Black LG : Light green G : Green L : Blue W : White Y : Yellow SB : Sky blue
BR : Brown O : Orange GR : Gray R : Red P : Pink V : Violet

W4X54E137A

Main Index
Group TOC

Door Switches Input Circuit <RHD>

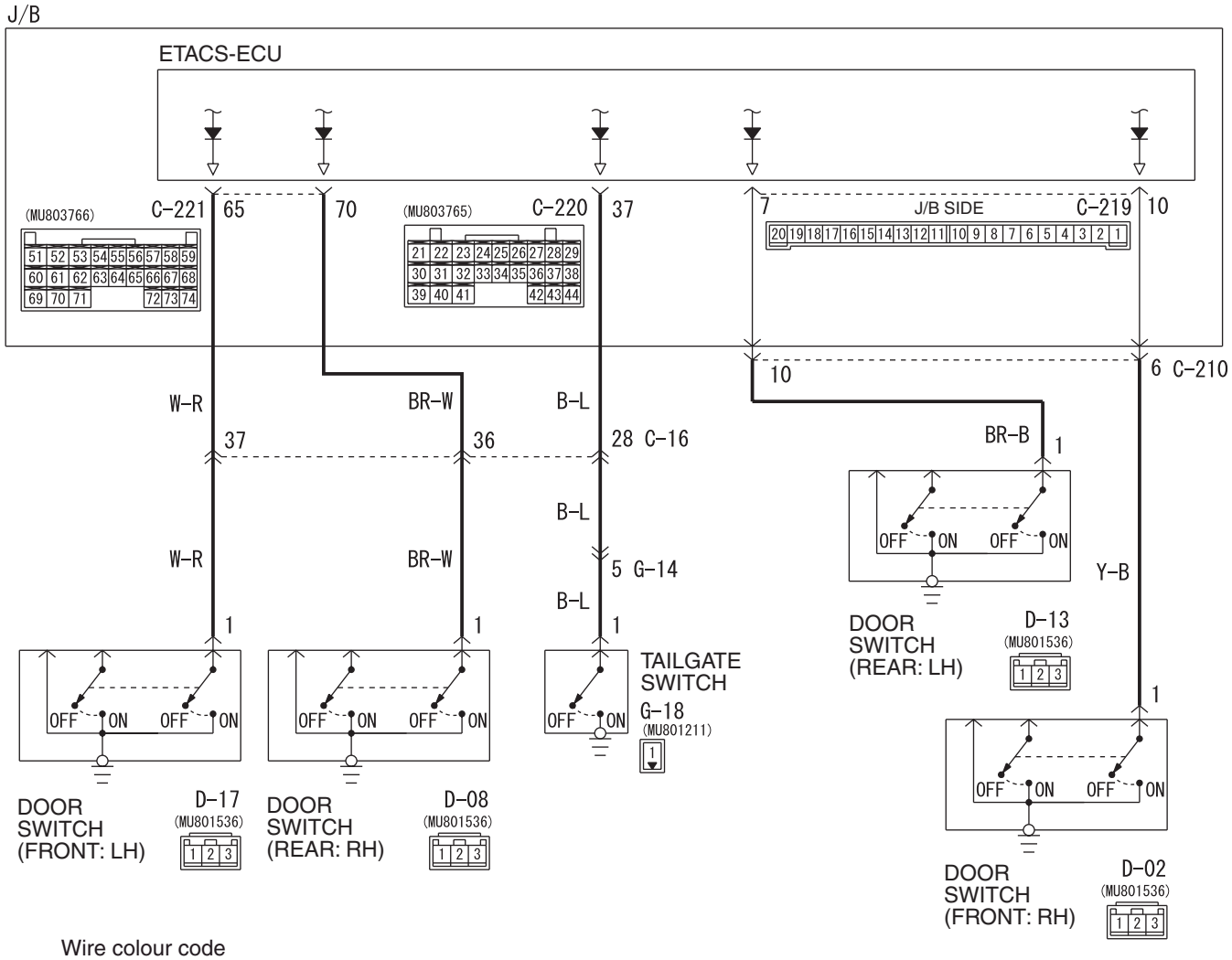

Wire colour code
B : Black LG : Light green G : Green L : Blue W : White Y : Yellow SB : Sky blue
BR : Brown O : Orange GR : Gray R : Red P : Pink V : Violet

W4X54E138A

COMMENTS ON TROUBLE SYMPTOM

Input signals from all the door switches are used to operate the functions below. If the signal(s) are abnormal, these functions will not work normally.

- Door-ajar warning buzzer
- Keyless entry system
- Interior lamps
- Interior lamp automatic-shutdown
- Door-ajar warning lamp

POSSIBLE CAUSES

- Malfunction of the door switches
- Malfunction of the ETACS-ECU
- Damaged harness wires and connectors

DIAGNOSIS PROCEDURE

Step 1. SWS monitor data list

<Selected item> ETACS ECU

- Driver's door is open

Item No.	Item name	Normal condition
Item 32	DR DOOR SW	ON

OK: Normal condition is displayed.

Q: Is the check result normal?

YES : Go to Step 2.

NO : Refer to inspection procedure P-5 "The driver's door switch signal is not received <LH drive vehicles>P.54C-346 or <RH drive vehicles>P.54C-348 ."

Step 2. Connector check: D-17 (front: LH), D-02 (front: RH), D-08 (rear: RH) or D-13 (rear: LH) door switch connectors or G-18 tailgate switch connector, and C-219, C-220 and C-221 ETACS-ECU connector

Connectors: C-219, C-220, C-221 <LHD>

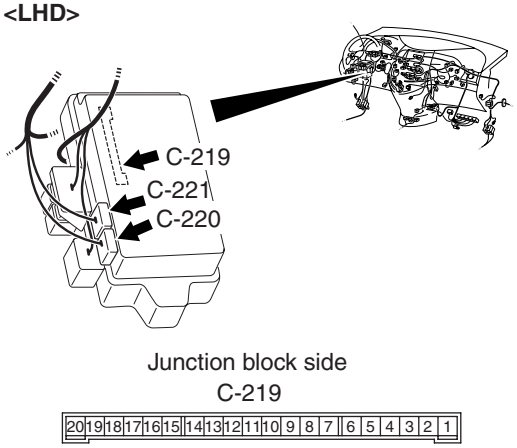

AC313401AC

Connectors: C-219, C-220, C-221 <RHD>

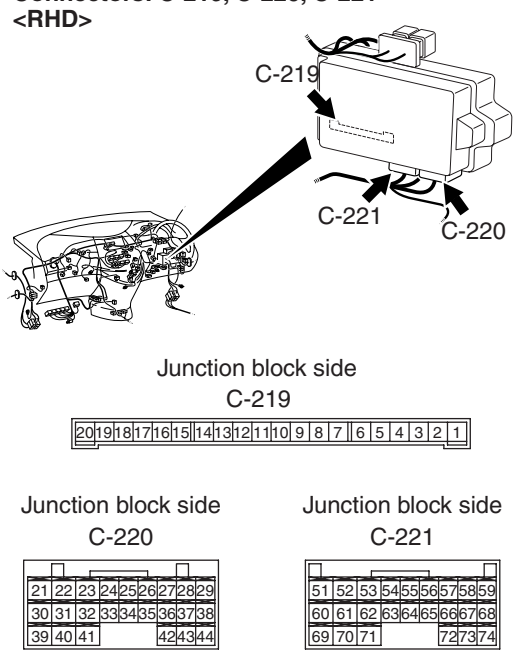

AC313411AC

Connectors: D-02, D-08, D-13, D-17 <LHD>

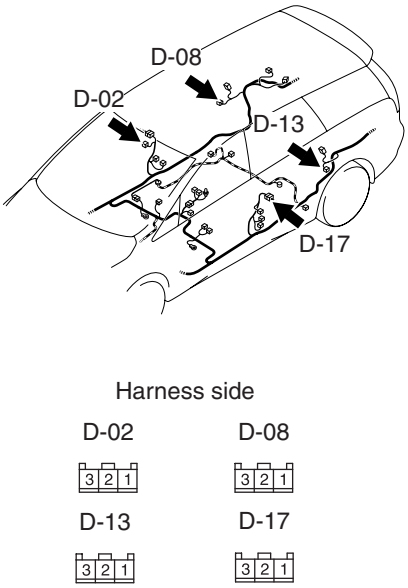

AC313426AD

Connectors: D-02, D-08, D-13, D-17 <RHD>

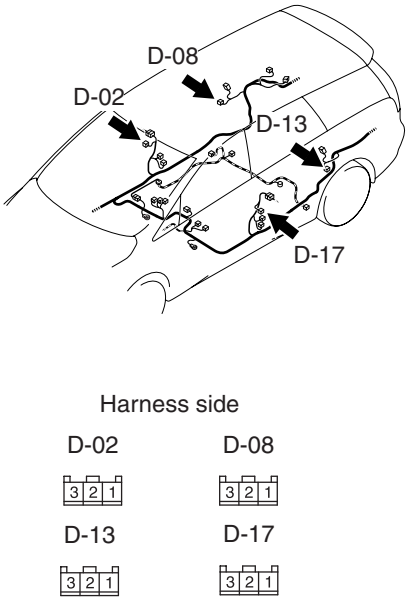

AC313428AD

Main Index
Group TOC

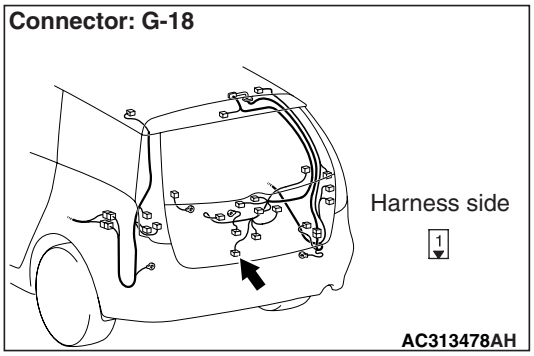

Q: Is the check result normal?
YES : Go to Step 3.
NO : Repair the defective connector.

Step 3. Check the installation condition.
Check that the door switch is installed on the body correctly.

Q: Is the check result normal?
YES : Go to Step 4.
NO : Correct the installation condition.

Step 4. Check the door switch.
Refer to GROUP 42 – Door P.42-36.

Q: Is the check result normal?
YES : Go to Step 5.
NO : Replace the door switch.

Step 5. Check the wiring harness from terminal No.1 of the D-17 (front: LH), D-02 (front: RH), D-08 (rear: RH) or D-13 (rear: LH) door switch connector or terminal No.1 of the G-18 tailgate switch connector to terminal No.65 (front: LH and RH), No.70 (rear: RH), No.7 (rear: LH) or No.37 (tailgate) of the C-219, C-220 and C-221 ETACS-ECU connector.

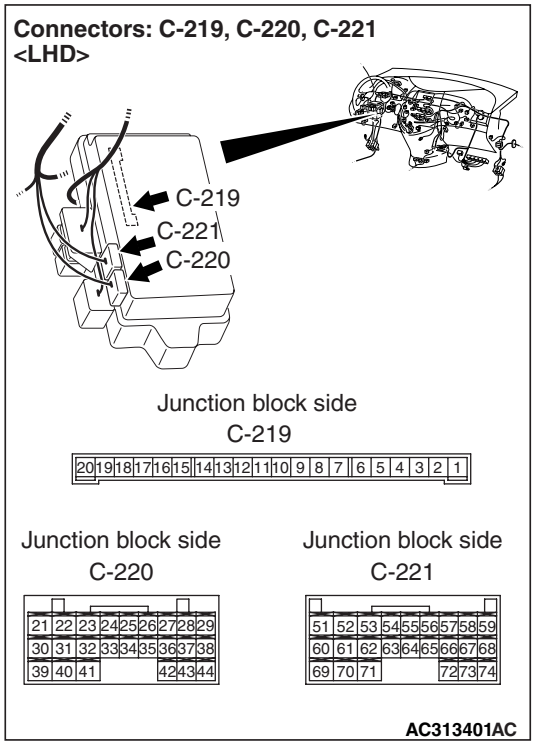

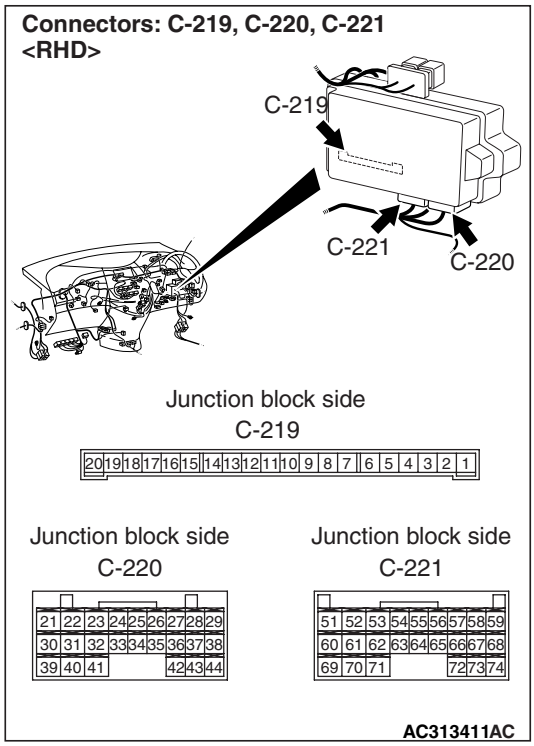

Main Index
Group TOC

Connectors: D-02, D-08, D-13, D-17 <LHD>

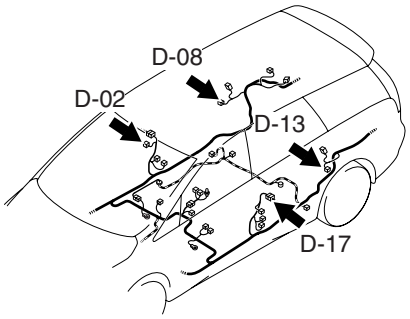

Harness side

D-02 D-08

D-13 D-17

AC313426AD

Connector: G-18

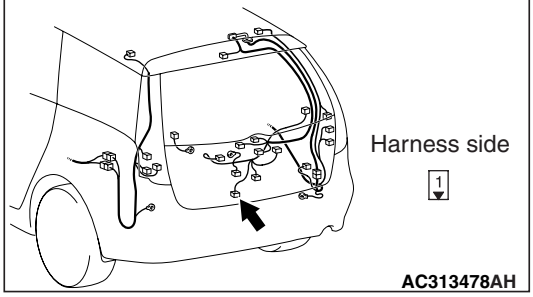

AC313478AH

NOTE:

Connector: C-16 <LHD>

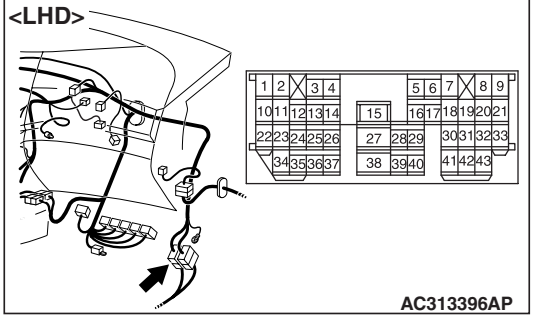

AC313396AP

Connectors: D-02, D-08, D-13, D-17 <RHD>

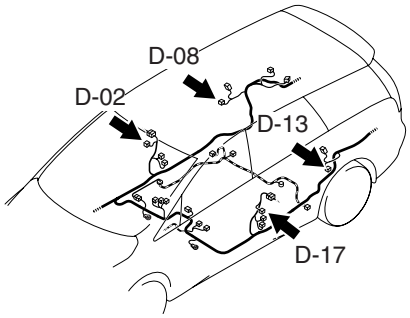

Harness side

D-02 D-08

D-13 D-17

AC313428AD

Connector: C-16 <RHD>

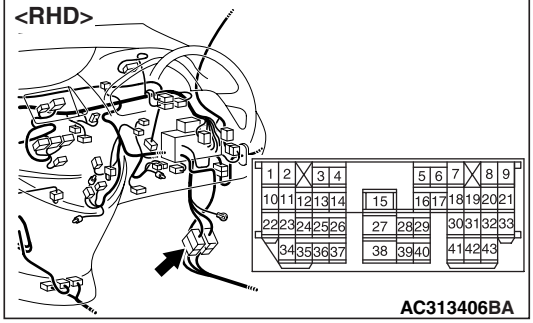

AC313406BA

Connector: C-210 <LHD>

Junction block (Front view)

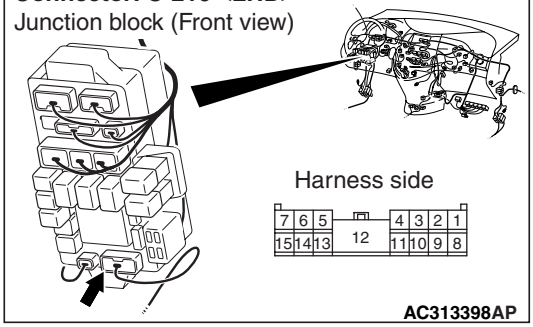

AC313398AP

Main Index
Group TOC

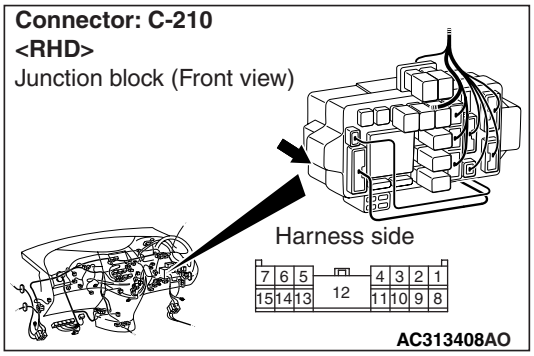

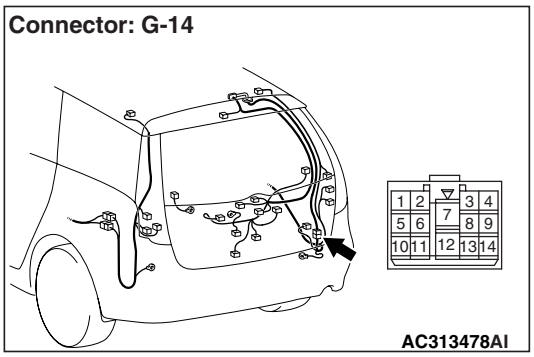

Prior to the wiring harness inspection, check intermediate connector C-16 (front: RH <LH drive vehicles>, front: LH <RH drive vehicles>, rear: RH and tailgate) or G-14 (tailgate) and junction block connector C-210 (rear: LH) and repair if necessary.

- Check the input line for open circuit.

Q: Is the check result normal?

YES : Go to Step 6.

NO : Repair the wiring harness between each of the door switches and the ETACS-ECU.

Step 6. ETACS switch data by using the SWS monitor

Check the input signals from the door switches.

- Doors other than the driver's door: Closed to open

Item No.	Item name	Normal condition
Item 05	Passenger’s door switch	from OFF to ON
Item 41	Rear door (right side) switch	from OFF to ON
Item 42	Rear door (left side) switch	from OFF to ON

OK: Normal conditions are displayed for all the items.

Q: Is the check result normal?

YES : The trouble can be an intermittent malfunction (Refer to GROUP 00 – How to Cope with Intermittent Malfunction P.00-5).

NO : Replace the ETACS-ECU.

Main Index
Group TOC

INSPECTION PROCEDURE P-13: The driver's door lock actuator switch signal is not received. <LH drive vehicles>

⚠ CAUTION
Whenever the ECU is replaced, ensure that the input signal circuit is normal.

Door Lock Actuator Input Circuit <LHD>

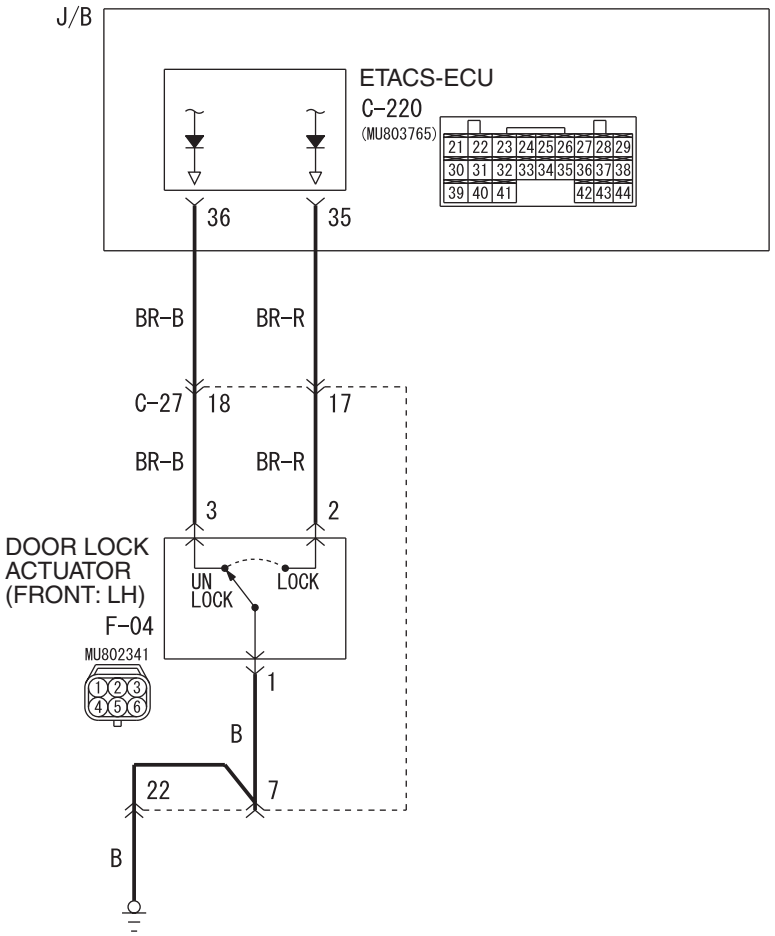

Wire colour code
B : Black LG : Light green G : Green L : Blue W : White Y : Yellow SB : Sky blue
BR : Brown O : Orange GR : Gray R : Red P : Pink V : Violet

W4X54E140A

COMMENTS ON TROUBLE SYMPTOM

Input signal from the driver's door lock actuator is used to operate the functions below. If the signal is abnormal, these functions will not work normally.

- Central door locking
- Interior lamps

POSSIBLE CAUSES

- Malfunction of the front door lock actuator (LH)
- Malfunction of the ETACS-ECU
- Damaged harness wires and connectors

Main Index
Group TOC

DIAGNOSIS PROCEDURE

Step 1. Connector check: F-04 front door lock actuator (LH) connector

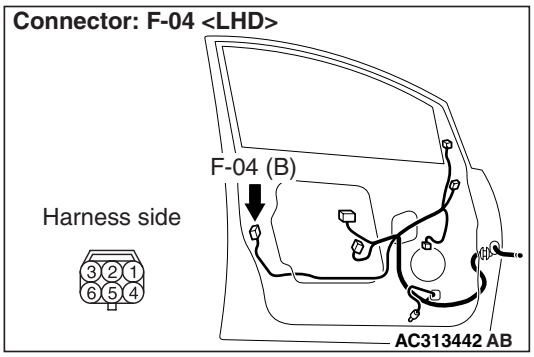

Q: Is the check result normal?
YES : Go to Step 2.
NO : Repair the defective connector.

Step 2. Check the front door lock actuator (LH).
Refer to GROUP 42 – Door P.42-45.

Q: Is the check result normal?
YES : Go to Step 3.
NO : Replace the front door lock actuator (RH).

Step 3. Resistance measurement at the F-04 front door lock actuator (LH) connector.

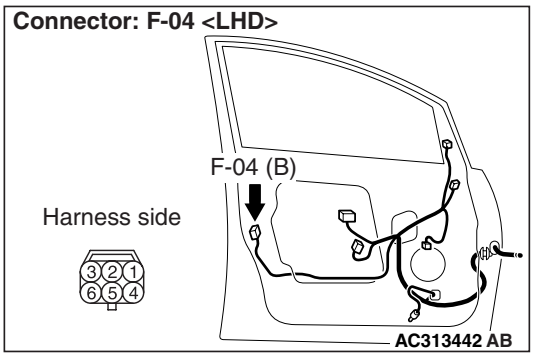

(1) Disconnect the connector, and measure at the wiring harness side.

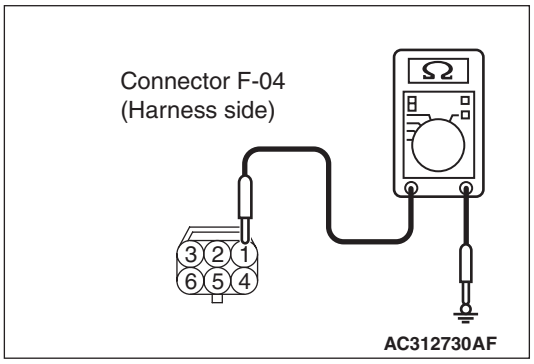

(2) Resistance between F-04 front door lock actuator (LH) connector terminal No.1 and body earth

OK: 2 Ω or less

Q: Is the check result normal?
YES : Go to Step 5.
NO : Go to Step 4.

Step 4. Check the wiring harness between F-04 front door lock actuator (LH) connector terminal No.1 and body earth

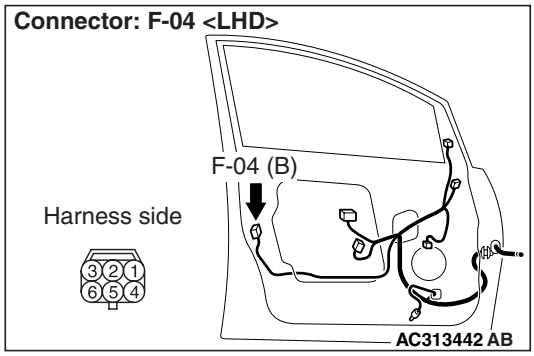

NOTE:

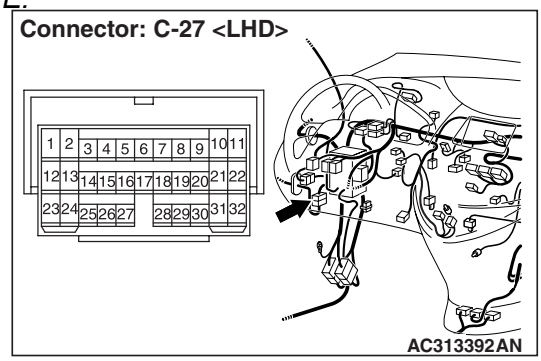

Prior to the wiring harness inspection, check intermediate connector C-27, and repair if necessary.

- Check the earth wires for open circuit.

Q: Is the check result normal?
YES : The trouble can be an intermittent malfunction (Refer to GROUP 00 – How to Cope with Intermittent Malfunction P.00-5).
NO : Repair the wiring harness.

Step 5. Connector check: C-220 ETACS-ECU connector

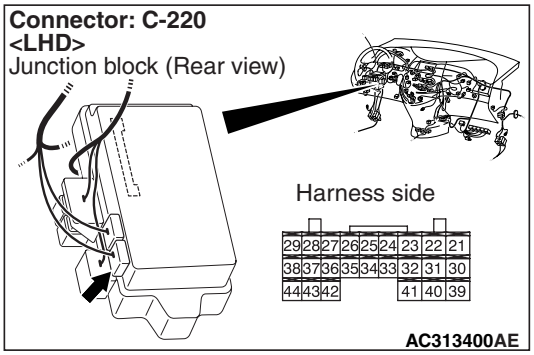

Q: Is the check result normal?
YES : Go to Step 6.
NO : Repair the defective connector.

Step 6. Check the wiring harness from F-04 front door lock actuator (LH) connector terminal Nos. 2 and 3 to C-220 ETACS-ECU connector terminal Nos. 35 and 36.

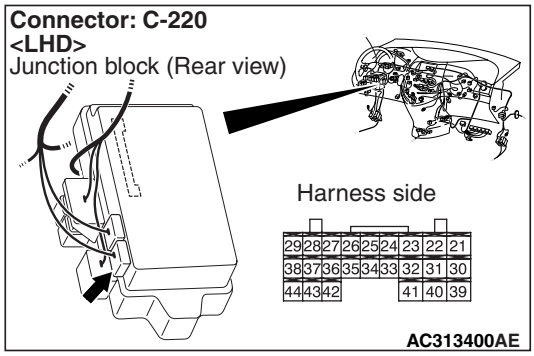

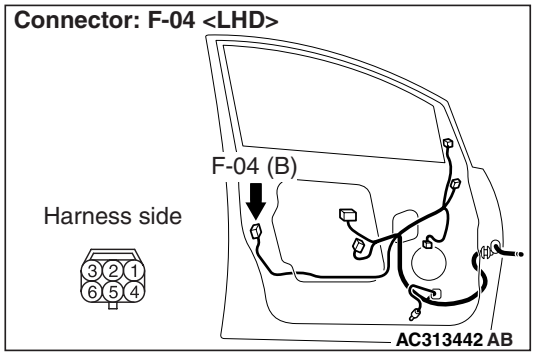

NOTE:

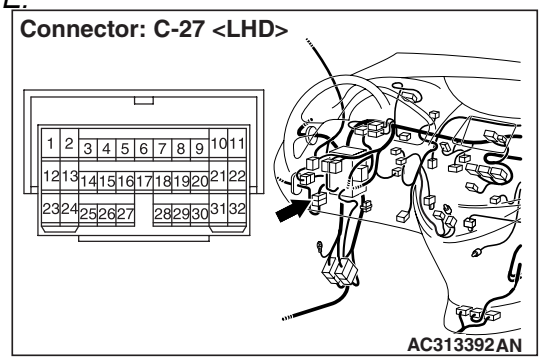

Prior to the wiring harness inspection, check intermediate connector C-27, and repair if necessary.

- Check the input line for open circuit.

Q: Is the check result normal?
YES : Go to Step 7.
NO : Repair the wiring harness.

Main Index
Group TOC

Step 7. ETACS switch data by using the SWS monitor

Check the input signal from the driver's door lock actuator switch.

- Driver's door lock actuator switch: LOCK → UNLOCK

Item No.	Item name	Normal condition
Item 21	Dr door lock actuator lock SW	from ON to OFF
Item 22	Dr door lock actuator unlock SW	from OFF to ON

OK: Normal conditions are displayed for all the items.

Q: Is the check result normal?

YES : . The trouble can be an intermittent malfunction (Refer to GROUP 00 – How to Cope with Intermittent Malfunction P.00-5).

NO : . Replace the ETACS-ECU.

Main Index
Group TOC

INSPECTION PROCEDURE P-13: The driver's door lock actuator switch signal is not received. <RH drive vehicles>

⚠ CAUTION

Whenever the ECU is replaced, ensure that the input signal circuit is normal.

Door Lock Actuator Input Circuit <RHD>

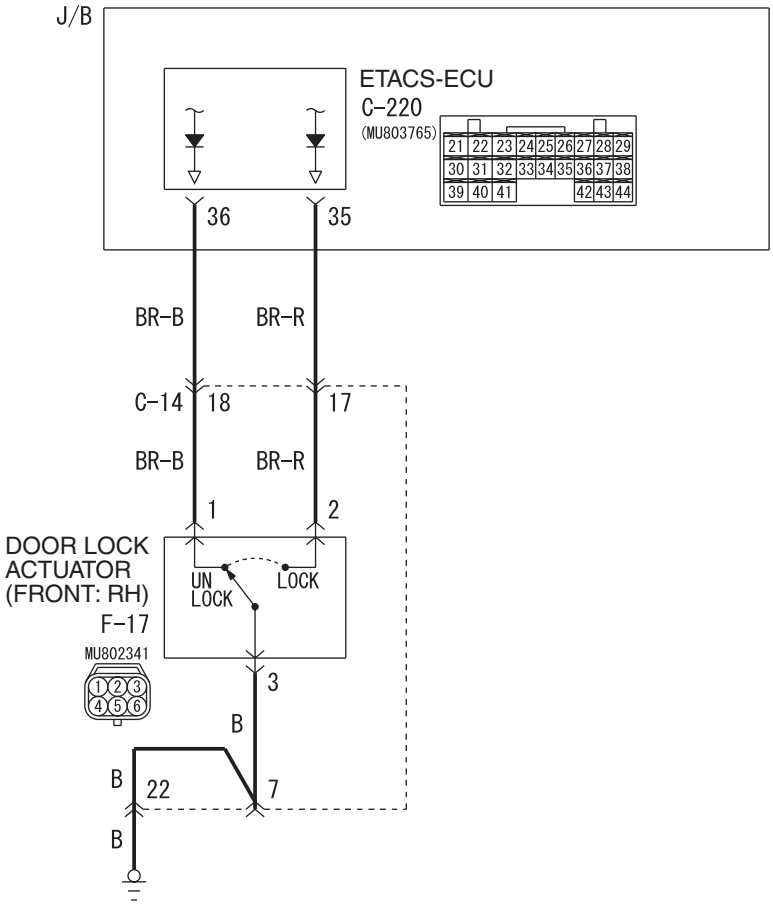

Wire colour code
B : Black LG : Light green G : Green L : Blue W : White Y : Yellow SB : Sky blue
BR : Brown O : Orange GR : Gray R : Red P : Pink V : Violet

W4X54E146A

COMMENTS ON TROUBLE SYMPTOM

Input signal from the driver's door lock actuator is used to operate the functions below. If the signal is abnormal, these functions will not work normally.

- Central door locking
- Interior lamps

POSSIBLE CAUSES

- Malfunction of the front door lock actuator (RH)
- Malfunction of the ETACS-ECU
- Damaged harness wires and connectors

Main Index
Group TOC

DIAGNOSIS PROCEDURE

Step 1. Connector check: F-17 front door lock actuator (RH) connector

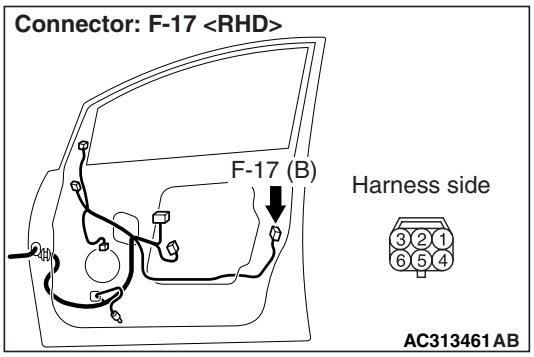

Q: Is the check result normal?
YES : Go to Step 2.
NO : Repair the defective connector.

Step 2. Check the front door lock actuator (RH).

Refer to GROUP 42 – Door P.42-45.

Q: Is the check result normal?
YES : Go to Step 3.
NO : Replace the front door lock actuator (RH).

Step 3. Resistance measurement at the F-17 front door lock actuator (RH) connector

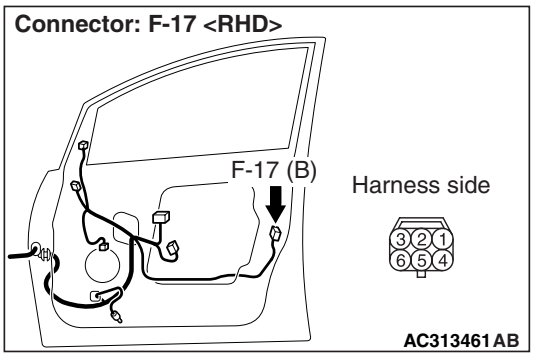

(1) Disconnect the connector, and measure at the wiring harness side.

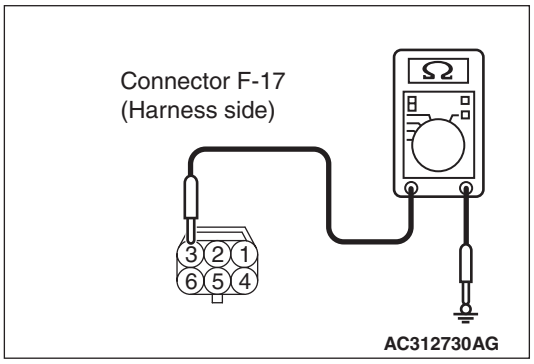

(2) Resistance between F-17 front door lock actuator (RH) connector terminal No.3 and body earth

OK: 2 Ω or less

Q: Is the check result normal?
YES : Go to Step 5.
NO : Go to Step 4.

Step 4. Check the wiring harness between F-17 front door lock actuator (RH) connector terminal No.3 and body earth

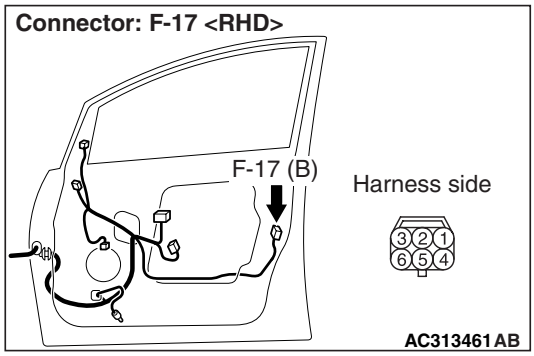

NOTE:

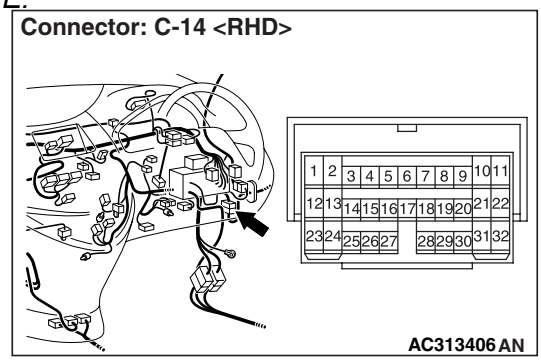

Prior to the wiring harness inspection, check intermediate connector C-14, and repair if necessary.

- Check the earth wires for open circuit.

Q: Is the check result normal?
YES : The trouble can be an intermittent malfunction (Refer to GROUP 00 – How to Cope with Intermittent Malfunction P.00-5).
NO : Repair the wiring harness.

Main Index
Group TOC

Step 5. Connector check: C-220 ETACS-ECU connector

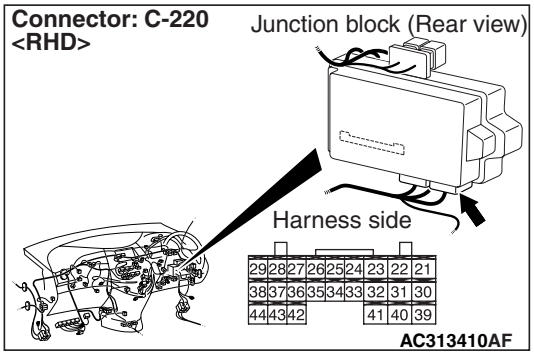

Q: Is the check result normal?
YES : Go to Step 6.
NO : Repair the defective connector.

Step 6. Check the wiring harness from F-17 front door lock actuator (RH) connector terminal Nos. 1 and 2 to C-220 ETACS-ECU connector terminal Nos. 35 and 36.

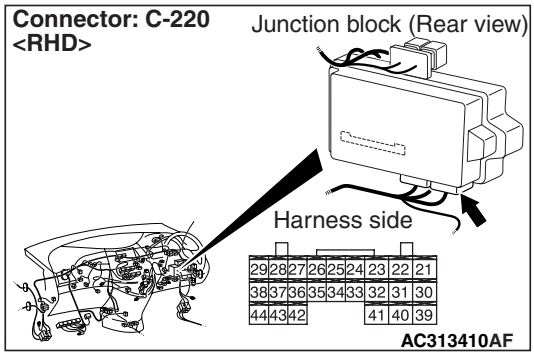

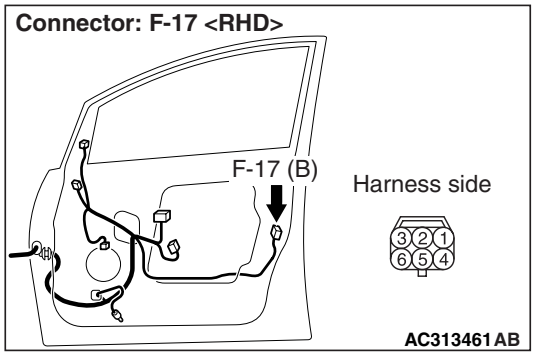

NOTE:

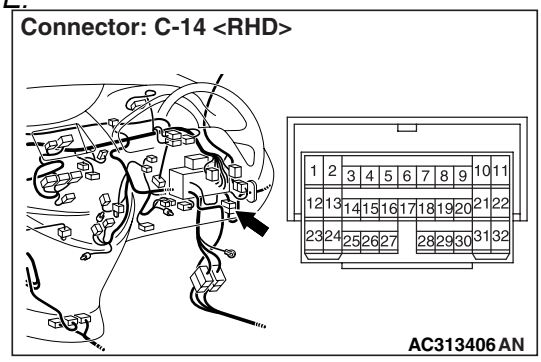

Prior to the wiring harness inspection, check intermediate connector C-14, and repair if necessary.

- Check the input line for open circuit.

Q: Is the check result normal?
YES : Go to Step 7.
NO : Repair the wiring harness.

Main Index
Group TOC

Step 7. ETACS switch data by using the SWS monitor

Check the input signal from the driver's door lock actuator switch.

- Driver's door lock actuator switch: LOCK → UNLOCK

Item No.	Item name	Normal condition
Item 21	Dr door lock actuator lock SW	from ON to OFF
Item 22	Dr door lock actuator unlock SW	from OFF to ON

OK: Normal conditions are displayed for all the items.

Q: Is the check result normal?

YES : The trouble can be an intermittent malfunction (Refer to GROUP 00 – How to Cope with Intermittent Malfunction P.00-5).

NO : Replace the ETACS-ECU.

INSPECTION PROCEDURE P-14: The passenger's door lock key switch signal is not detected. <LH drive vehicles>

⚠ CAUTION

Whenever the ECU is replaced, ensure that the input signal circuit is normal.

Door Lock Key Cylinder Switch Input Circuit <LHD>

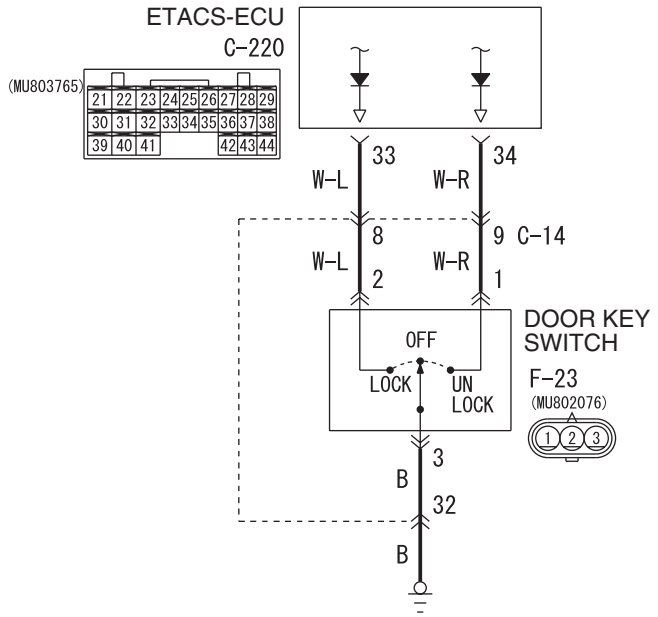

Wire colour code
B : Black LG : Light green G : Green L : Blue W : White Y : Yellow SB : Sky blue
BR : Brown O : Orange GR : Gray R : Red P : Pink V : Violet

W4X54E144A

Main Index
Group TOC

COMMENTS ON TROUBLE SYMPTOM

Input signal from the front passenger's door lock key switch is used to operate the central door locking function. If the signal is abnormal, the central door locking function will not work normally.

POSSIBLE CAUSES

- Malfunction of the front passenger's door lock key switch
- Malfunction of the ETACS-ECU
- Damaged harness wires and connectors

DIAGNOSIS PROCEDURE

Step 1. Connector check: F-23 door key switch connector

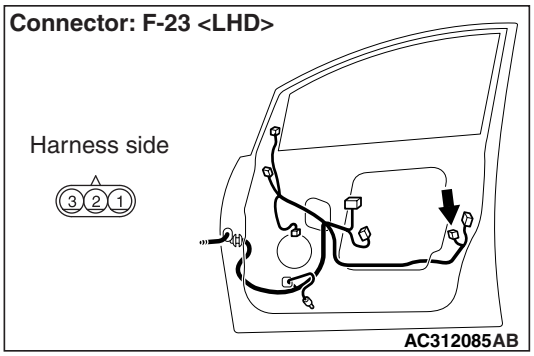

Q: Is the check result normal?
YES : Go to Step 2.
NO : Repair the defective connector.

Step 2. Check the door key switch.

Refer to GROUP 42 – Door P.42-45.

Q: Is the check result normal?
YES : Go to Step 3.
NO : Replace the door key switch.

Step 3. Resistance measurement at the F-23 door key switch connector.

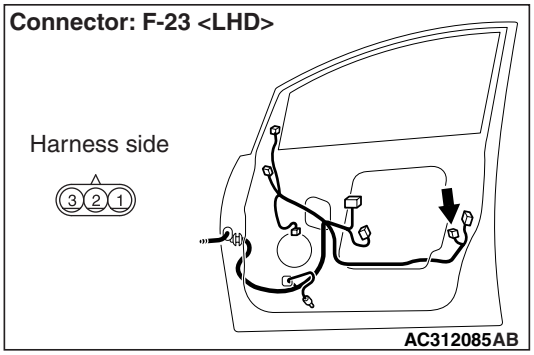

(1) Disconnect the connector, and measure at the wiring harness side.

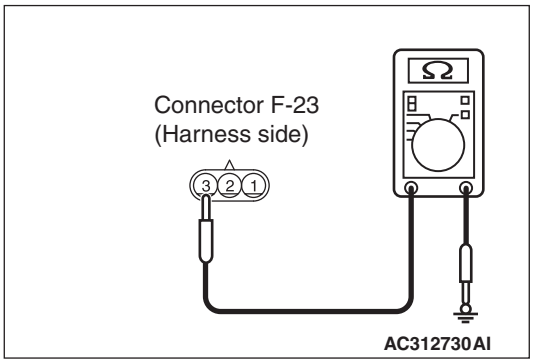

(2) Resistance between F-23 door key switch connector terminal No.3 and body earth

OK: 2 Ω or less

Q: Is the check result normal?
YES : Go to Step 5.
NO : Go to Step 4.

Step 4. Check the wiring harness between F-23 door key switch connector terminal No.3 and body earth.

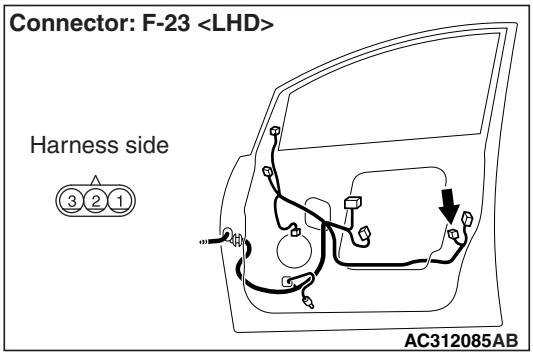

NOTE:

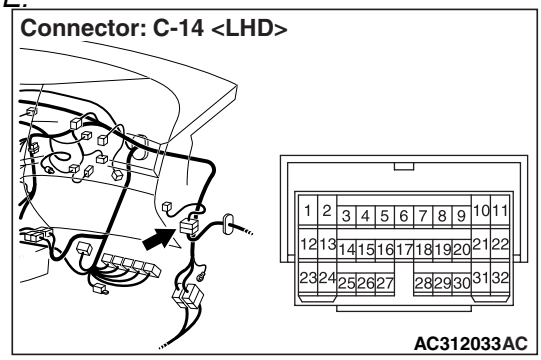

Prior to the wiring harness inspection, check intermediate connector C-14, and repair if necessary.

- Check the earth wires for open circuit.

Q: Is the check result normal?
YES : Intermittent malfunction. (Refer to GROUP 00 – How to Cope with Intermittent Malfunction P.00-5).
NO : Repair the wiring harness.

Main Index
Group TOC

Step 5. Connector check: C-220 ETACS-ECU connector

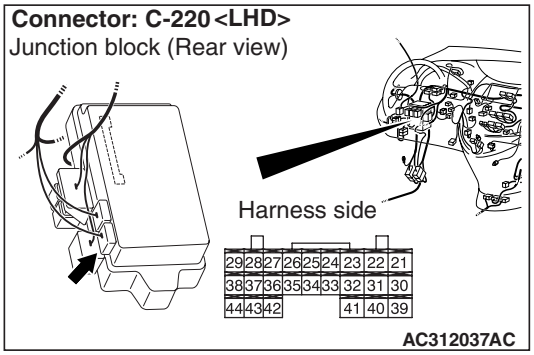

Q: Is the check result normal?
YES : Go to Step 6.
NO : Repair the defective connector.

Step 6. Check the wiring harness from F-23 door key switch connector terminal Nos. 1 and 2 to C-220 ETACS-ECU connector terminal Nos. 34 and 33.

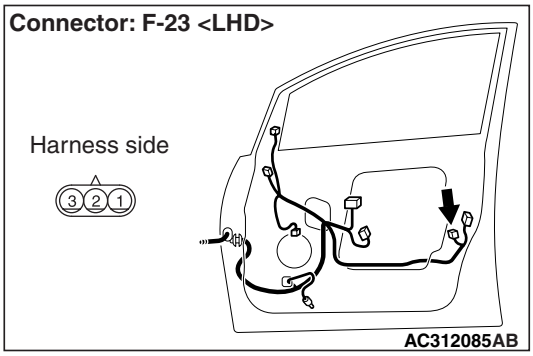

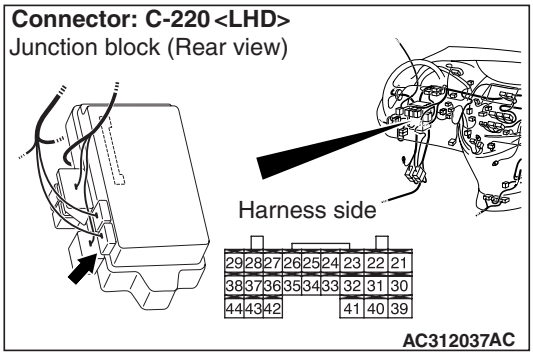

NOTE:

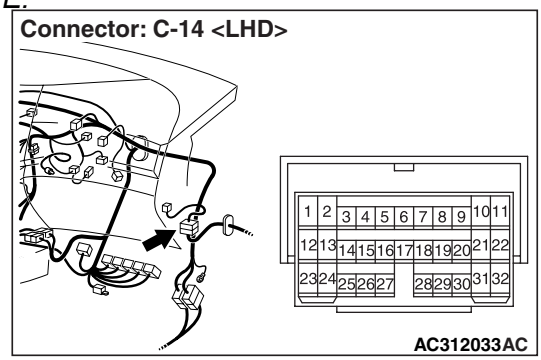

Prior to the wiring harness inspection, check intermediate connector C-14, and repair if necessary.

- Check the input line for open circuit.

Q: Is the check result normal?
YES : Go to Step 7.
NO : Repair the wiring harness.

Main Index
Group TOC

Step 7. ETACS switch data by using the SWS monitor

Check the input signal from the passenger's door lock key switch.

- passenger's door lock key cylinder: Neutral to lock

Item No.	Item name	Normal condition
Item 26	Center door lock switch	ON (only when operated to lock)
Item 27	Center door unlock switch	OFF

- passenger's door lock key cylinder: Neutral to Unlock

Item No.	Item name	Normal condition
Item 26	Center door lock switch	OFF
Item 27	Center door unlock switch	ON (only when operated to lock)

OK: Normal conditions are displayed for all the items.

Q: Is the check result normal?

YES : . The trouble can be an intermittent malfunction (Refer to GROUP 00 – How to Cope with Intermittent Malfunction P.00-5).

NO : . Replace the ETACS-ECU.

Main Index
Group TOC

INSPECTION PROCEDURE P-14: The passenger's door lock key switch signal is not detected. <R.H. drive vehicles>

⚠ CAUTION
Whenever the ECU is replaced, ensure that the input signal circuit is normal.

Door Lock Key Cylinder Switch Input Circuit <RHD>

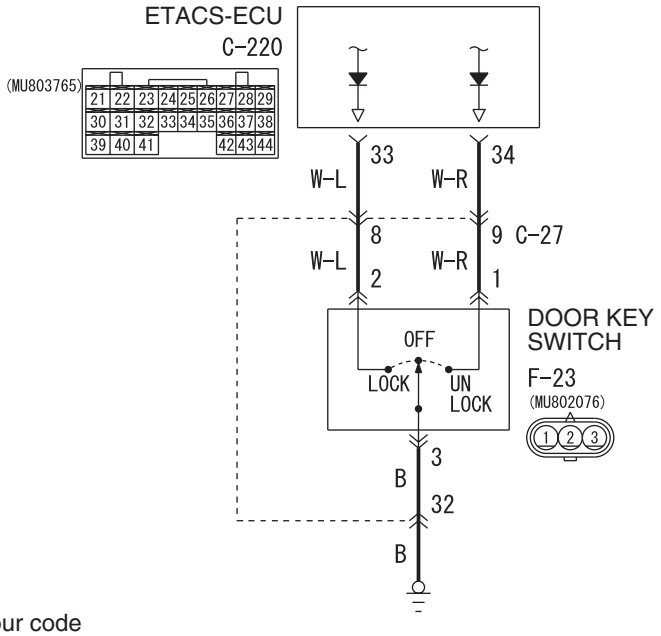

Wire colour code
B : Black LG : Light green G : Green L : Blue W : White Y : Yellow SB : Sky blue
BR : Brown O : Orange GR : Gray R : Red P : Pink V : Violet

W4X54X090A

COMMENTS ON TROUBLE SYMPTOM

Input signal from the front passenger's door lock key switch is used to operate the central door locking function. If the signal is abnormal, the central door locking function will not work normally.

POSSIBLE CAUSES

- Malfunction of the front passenger's door lock key switch
- Malfunction of the ETACS-ECU
- Damaged harness wires and connectors

DIAGNOSIS PROCEDURE

Step 1. Connector check: F-23 door key switch connector

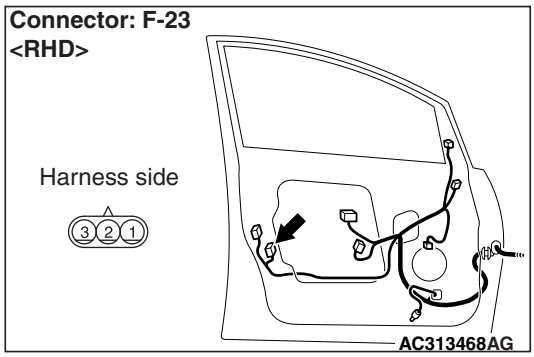

Q: Is the check result normal?
YES : Go to Step 2.
NO : Repair the defective connector.

Step 2. Check the door key switch.
Refer to GROUP 42 – Door P.42-45.

Q: Is the check result normal?
YES : Go to Step 3.
NO : Replace the door key switch.

Step 3. Resistance measurement at the F-23 door key switch connector.

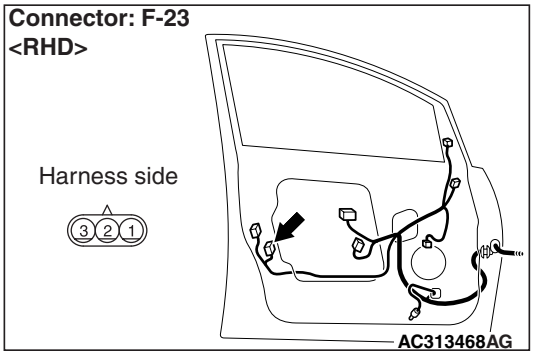

(1) Disconnect the connector, and measure at the wiring harness side.

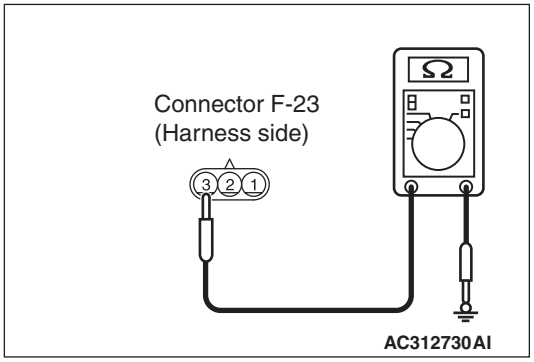

(2) Resistance between F-23 door key switch connector terminal No.3 and body earth

OK: 2 Ω or less

Q: Is the check result normal?
YES : Go to Step 5.
NO : Go to Step 4.

Step 4. Check the wiring harness between F-23 door key switch connector terminal No.3 and body earth.

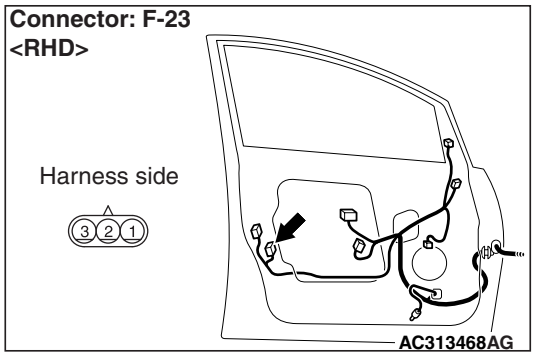

NOTE:

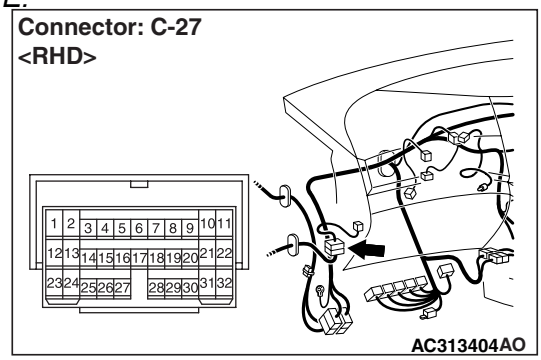

Prior to the wiring harness inspection, check intermediate connector C-27, and repair if necessary.

- Check the earth wires for open circuit.

Q: Is the check result normal?
YES : Intermittent malfunction. (Refer to GROUP 00 – How to Cope with Intermittent Malfunction P.00-5).
NO : Repair the wiring harness.

Step 5. Connector check: C-220 ETACS-ECU connector

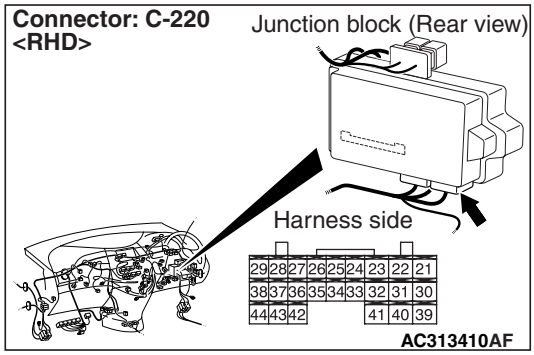

Q: Is the check result normal?
YES : Go to Step 6.
NO : Repair the defective connector.

Main Index
Group TOC

Step 6. Check the wiring harness from F-23 door key switch connector terminal Nos. 1 and 2 to C-220 ETACS-ECU connector terminal Nos. 34 and 33.

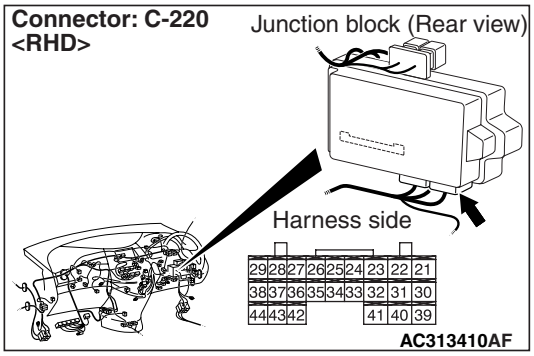

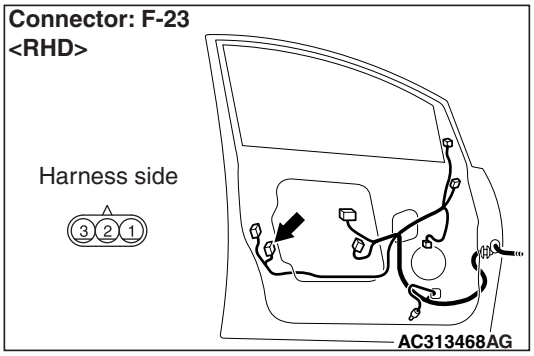

NOTE:

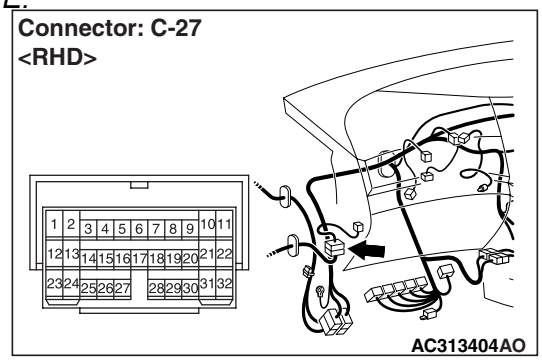

Prior to the wiring harness inspection, check intermediate connector C-27, and repair if necessary.

- Check the input line for open circuit.

Q: Is the check result normal?

YES : Go to Step 7.

NO : Repair the wiring harness.

Step 7. ETACS switch data by using the SWS monitor

Check the input signal from the passenger's door lock key switch.

- passenger's door lock key cylinder: Neutral to lock

Item No.	Item name	Normal condition
Item 26	Center door lock switch	ON (only when operated to lock)
Item 27	Center door unlock switch	OFF

- passenger's door lock key cylinder: Neutral to UNLock

Item No.	Item name	Normal condition
Item 26	Center door lock switch	OFF
Item 27	Center door unlock switch	ON (only when operated to lock)

OK: Normal conditions are displayed for all the items.

Q: Are the check result normal?

YES : The trouble can be an intermittent malfunction (Refer to GROUP 00 – How to Cope with Intermittent Malfunction P.00-5).

NO : Replace the ETACS-ECU.

Main Index
Group TOC

INSPECTION PROCEDURE P-15: The tailgate key switch signal is not detected.

⚠ CAUTION
Whenever the ECU is replaced, ensure that the input signal circuit is normal.

Tailgate Key Switch Input Circuit

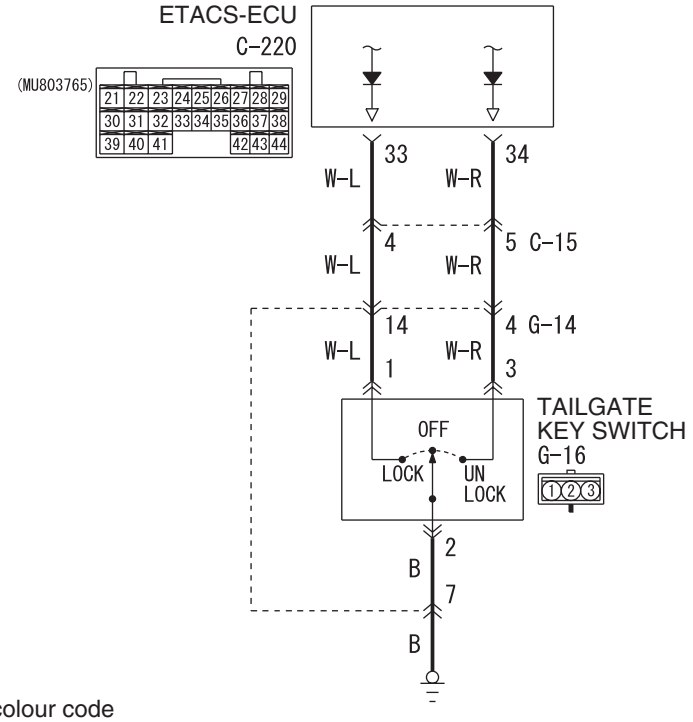

Wire colour code
B : Black LG : Light green G : Green L : Blue W : White Y : Yellow SB : Sky blue
BR : Brown O : Orange GR : Gray R : Red P : Pink V : Violet

W4X54X091A

COMMENTS ON TROUBLE SYMPTOM

Input signal from the tailgate key switch is used to operate the central door locking function. If the signal is abnormal, the central door locking function will not work normally.

POSSIBLE CAUSES

- Malfunction of the tailgate key switch
- Malfunction of the ETACS-ECU
- Damaged harness wires and connectors

DIAGNOSIS PROCEDURE

Step 1. Connector check: G-16 tailgate key switch connector

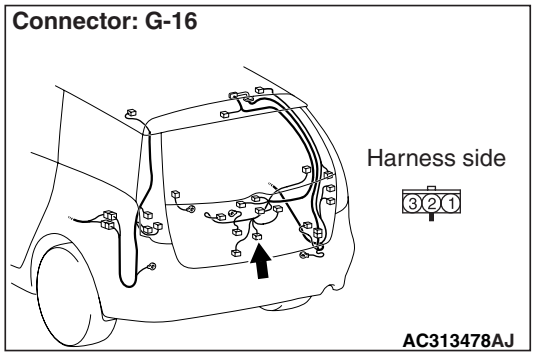

Q: Is the check result normal?
YES : Go to Step 2.
NO : Repair the defective connector.

Main Index
Group TOC

Step 2. Check the tailgate key switch.
Refer to GROUP 42 – Door P.42-45.

Q: Is the check result normal?
YES : Go to Step 3.
NO : Replace the tailgate lock key switch.

Step 3. Resistance measurement at the G-16 tailgate key switch connector.

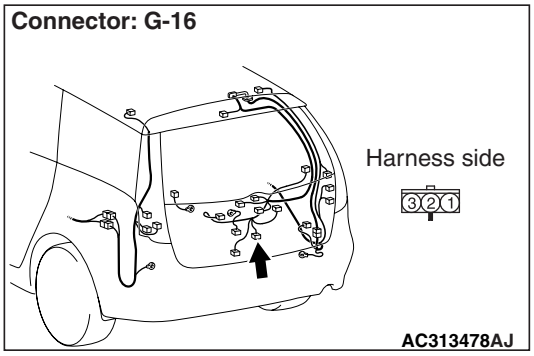

(1) Disconnect the connector, and measure at the wiring harness side.

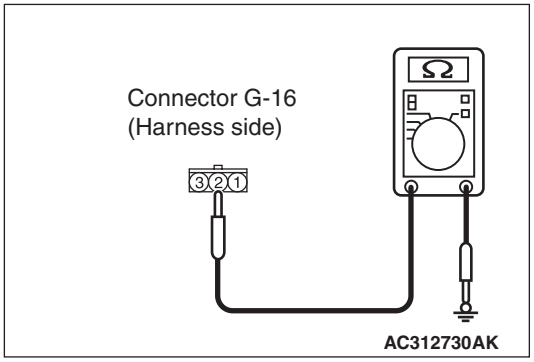

(2) Resistance between G-16 tailgate key switch connector terminal No.2 and body earth

OK: 2 Ω or less

Q: Is the check result normal?
YES : Go to Step 5.
NO : Go to Step 4.

Step 4. Check the wiring harness between G-16 tailgate key switch connector terminal No.2 and body earth.

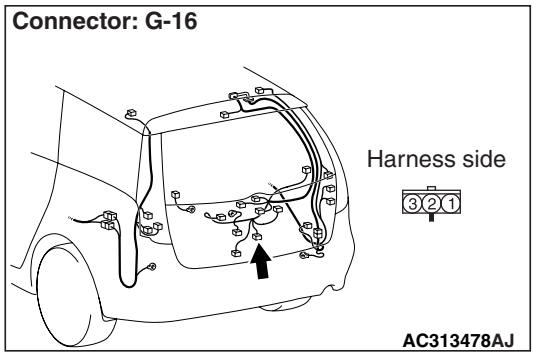

NOTE:

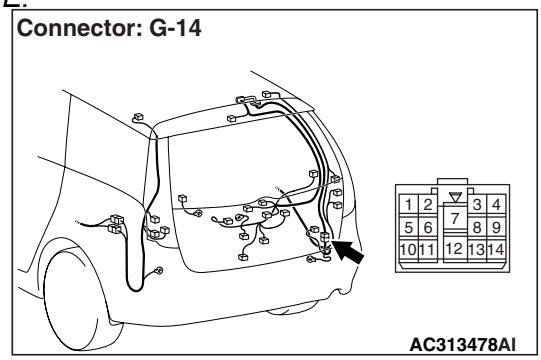

Prior to the wiring harness inspection, check intermediate connector G-14, and repair if necessary.

- Check the earth wires for open circuit.

Q: Is the check result normal?
YES : The trouble can be an intermittent malfunction (Refer to GROUP 00 – How to Cope with Intermittent Malfunction P.00-5).
NO : Repair the wiring harness.

Main Index
Group TOC

Step 5. Connector check: C-220 ETACS-ECU connector

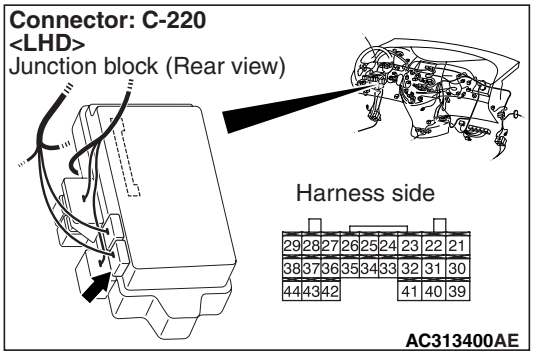

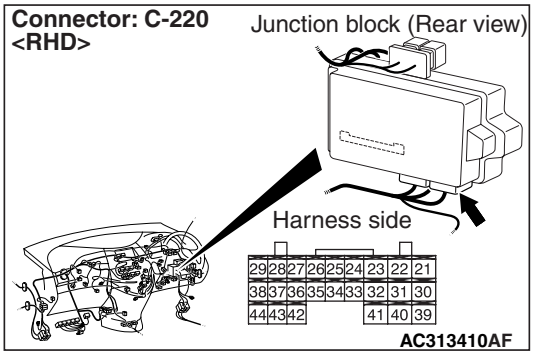

Q: Is the check result normal?

YES : Go to Step 6.

NO : Repair the defective connector.

Step 6. Check the wiring harness from G-16 tailgate key switch connector terminal Nos. 1 and 3 to C-220 ETACS-ECU connector terminal Nos. 33 and 34.

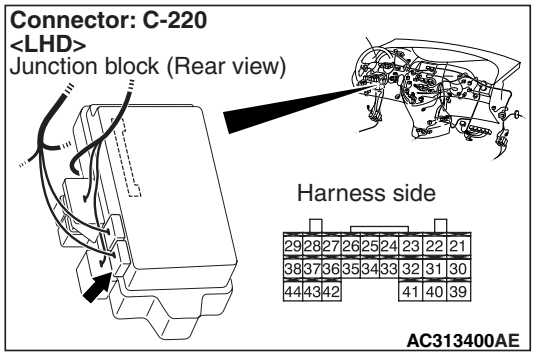

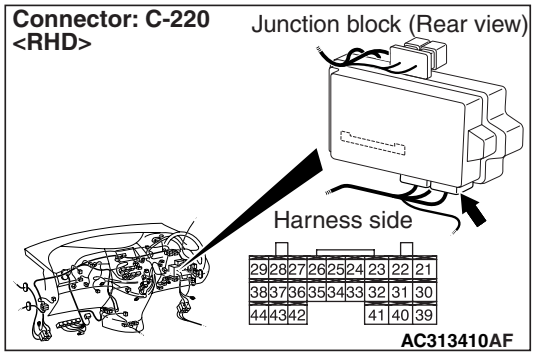

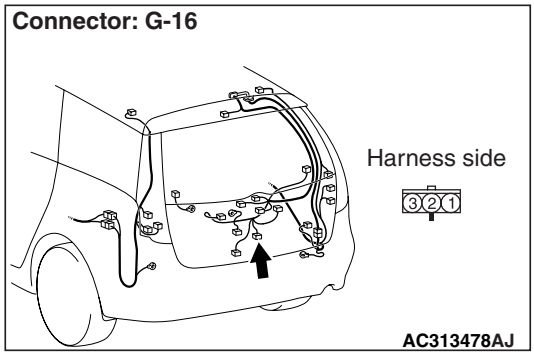

NOTE:

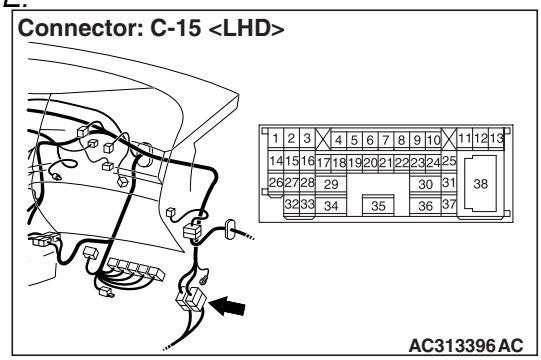

Main Index
Group TOC

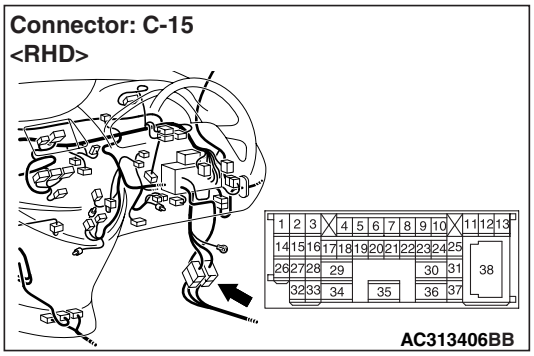

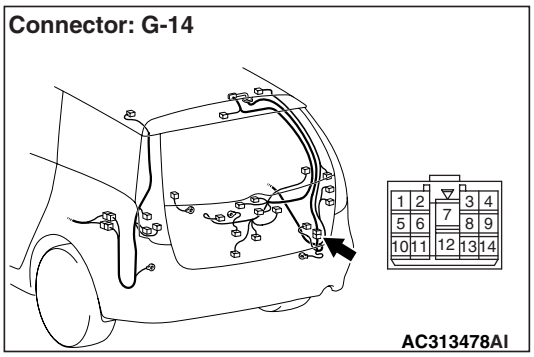

Prior to the wiring harness inspection, check intermediate connector C-15 and G-14, and repair if necessary.

- Check the input line for open circuit.

Q: Is the check result normal?

YES : Go to Step 7.

NO : Repair the wiring harness.

Step 7. ETACS switch data by using the SWS monitor

Check the input signal from the tailgate key switch.

- Tailgate key switch: Neutral to lock

Item No.	Item name	Normal condition
Item 18	Trunk key unlock switch	OFF
Item 19	Rear gate key lock switch	ON (only when operated to lock)

- Tailgate key switch: Neutral to unlock

Item No.	Item name	Normal condition
Item 18	Trunk key unlock switch	ON (only when operated to unlock)
Item 19	Rear gate key lock switch	OFF

OK: Normal conditions are displayed for all the items.

Q: Is the check result normal?

YES : The trouble can be an intermittent malfunction (Refer to GROUP 00 – How to Cope with Intermittent Malfunction P.00-5).

NO : Replace the ETACS-ECU.

Main Index
Group TOC

INSPECTION PROCEDURE P-16: The tailgate lock release handle signal is not received.

⚠ CAUTION
Whenever the ECU is replaced, ensure that the input signal circuit is normal.

Tailgate Lock Release Handle Input Circuit

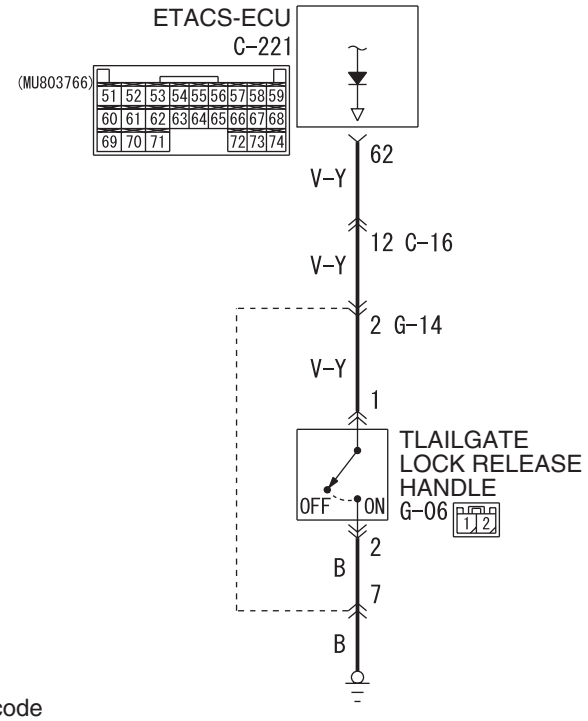

Wire colour code
B : Black LG : Light green G : Green L : Blue W : White Y : Yellow SB : Sky blue
BR : Brown O : Orange GR : Gray R : Red P : Pink V : Violet

W4X54E188A

COMMENTS ON TROUBLE SYMPTOM

Input signal from the tailgate lock release handle is used to operate the central door locking function. If the signal is abnormal, the central door locking function will not work normally.

POSSIBLE CAUSES

- Malfunction of the tailgate lock release handle
- Malfunction of the ETACS-ECU
- Damaged harness wires and connectors

DIAGNOSIS PROCEDURE

Step 1. Connector check: G-06 tailgate lock release handle connector

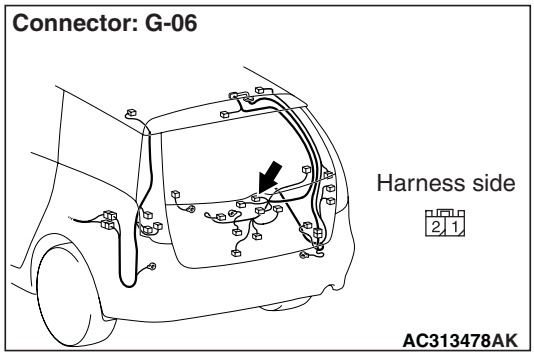

Q: Is the check result normal?
YES : Go to Step 2.
NO : Repair the defective connector.

Main Index
Group TOC

Step 2. Check the tailgate lock release handle.
Refer to GROUP 42 – Tailgate P.42-60.

Q: Is the check result normal?
YES : Go to Step 3
NO : Replace the tailgate lock release handle.

Step 3. Resistance measurement at the G-06 tailgate lock release handle connector

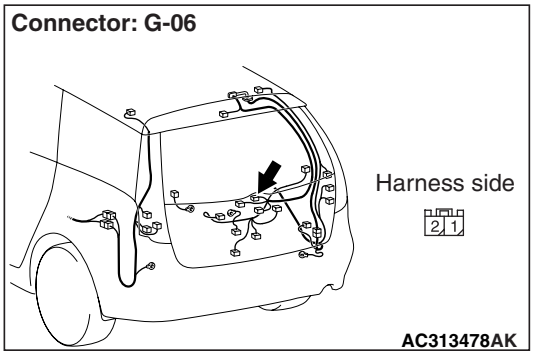

(1) Disconnect the connector, and measure at the wiring harness side.

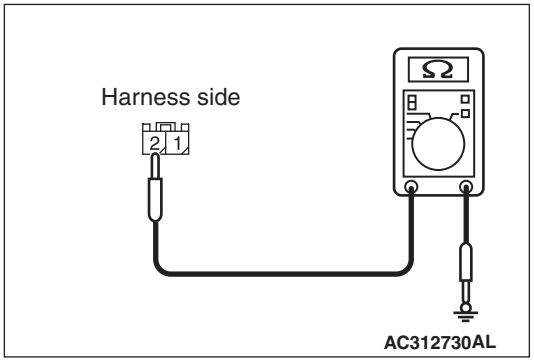

(2) Resistance between G-06 tailgate lock release handle connector terminal No.2 and body earth

OK: 2 Ω or less

Q: Is the check result normal?
YES : Go to Step 5.
NO : Go to Step 4.

Step 4. Check the wiring harness between G-06 tailgate lock release handle connector terminal No.3 and body earth

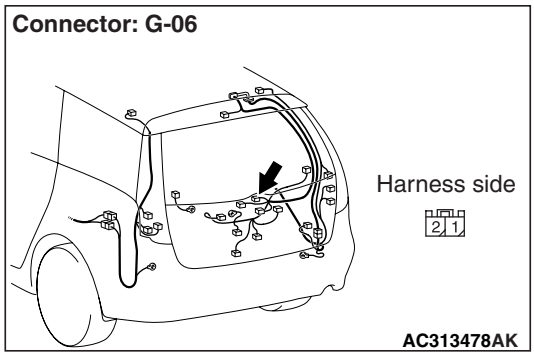

NOTE:

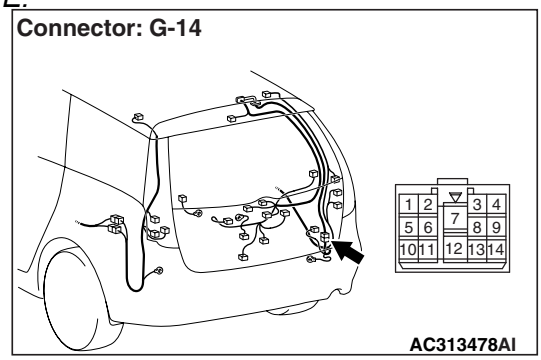

Prior to the wiring harness inspection, check intermediate connector G-14, and repair if necessary.

- Check the earth wires for open circuit.

Q: Is the check result normal?
YES : The trouble can be an intermittent malfunction (Refer to GROUP 00 – How to Cope with Intermittent Malfunction P.00-5).
NO : Repair the wiring harness.

Main Index
Group TOC

Step 5. Connector check: C-221 ETACS-ECU connector

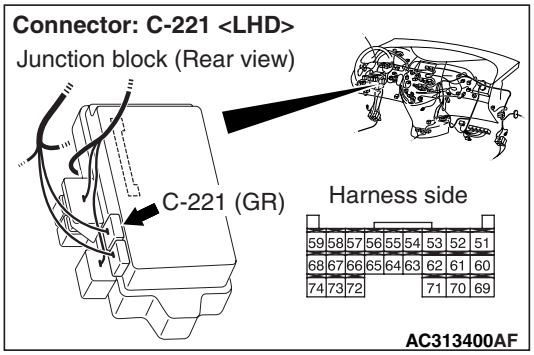

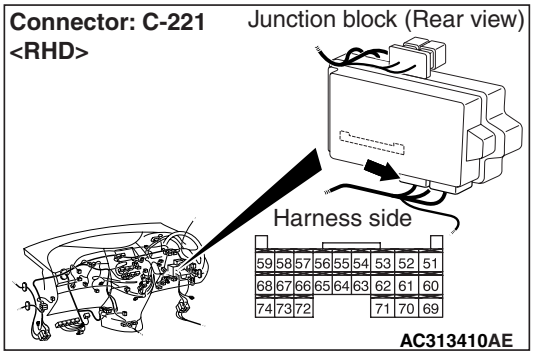

Q: Is the check result normal?

YES : Go to Step 6.

NO : Repair the defective connector.

Step 6. Check the wiring harness from G-06 tailgate lock release handle connector terminal No.1 to C-221 ETACS-ECU connector terminal No.62.

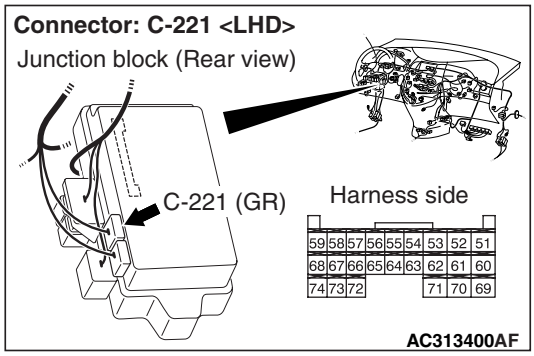

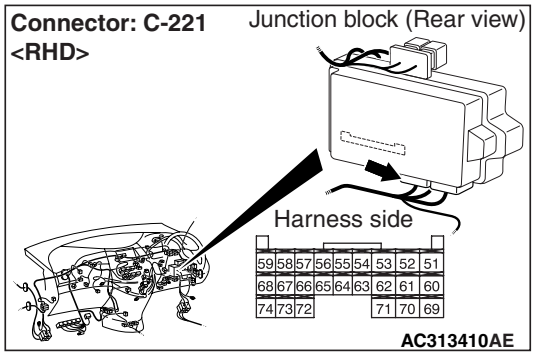

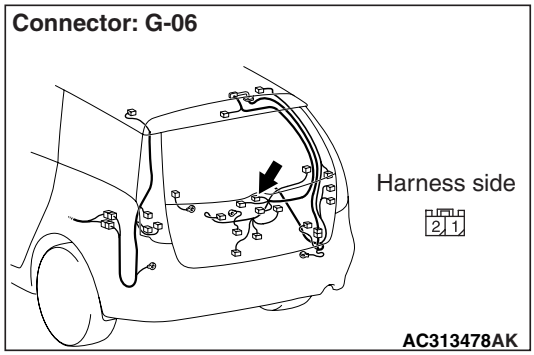

NOTE:

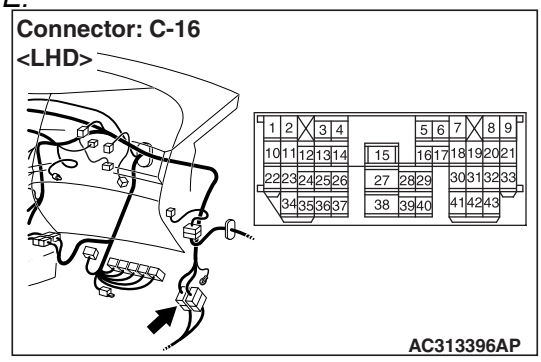

Main Index
Group TOC

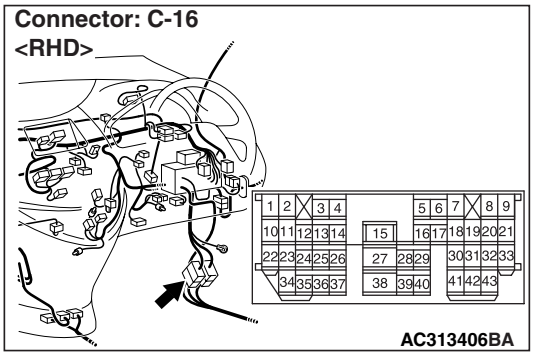

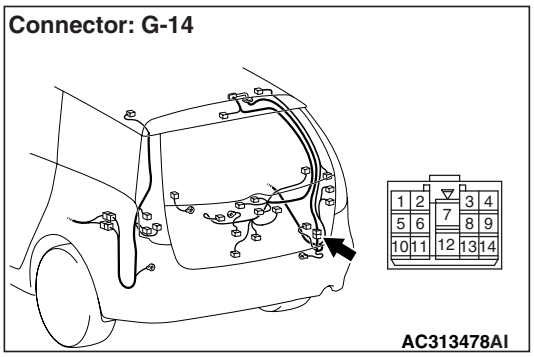

Prior to the wiring harness inspection, check intermediate connector C-16, G-14 and repair if necessary.

- Check the input line for open circuit.

Q: Is the check result normal?

YES : Go to Step 7.

NO : Repair the wiring harness.

Step 7. ETACS switch data by using the SWS monitor

Check the input signal from the Tailgate lock release handle.

- Tailgate lock release handle: from OFF to ON

Item No.	Item name	Normal condition
Item 30	Gate opener switch	OFF to ON (only when switch is operated)

OK: Normal condition is displayed.

Q: Is the check result normal?

YES : The trouble can be an intermittent malfunction (Refer to GROUP 00 – How to Cope with Intermittent Malfunction P.00-5).

NO : Replace the ETACS-ECU.

Main Index
Group TOC

INSPECTION PROCEDURE P-17: The driver's seat belt switch signal is not received. <LH drive vehicles>

⚠ CAUTION
Whenever the ECU is replaced, ensure that the input signal circuit is normal.

Driver's Seat Belt Switch Input Circuit <LHD>

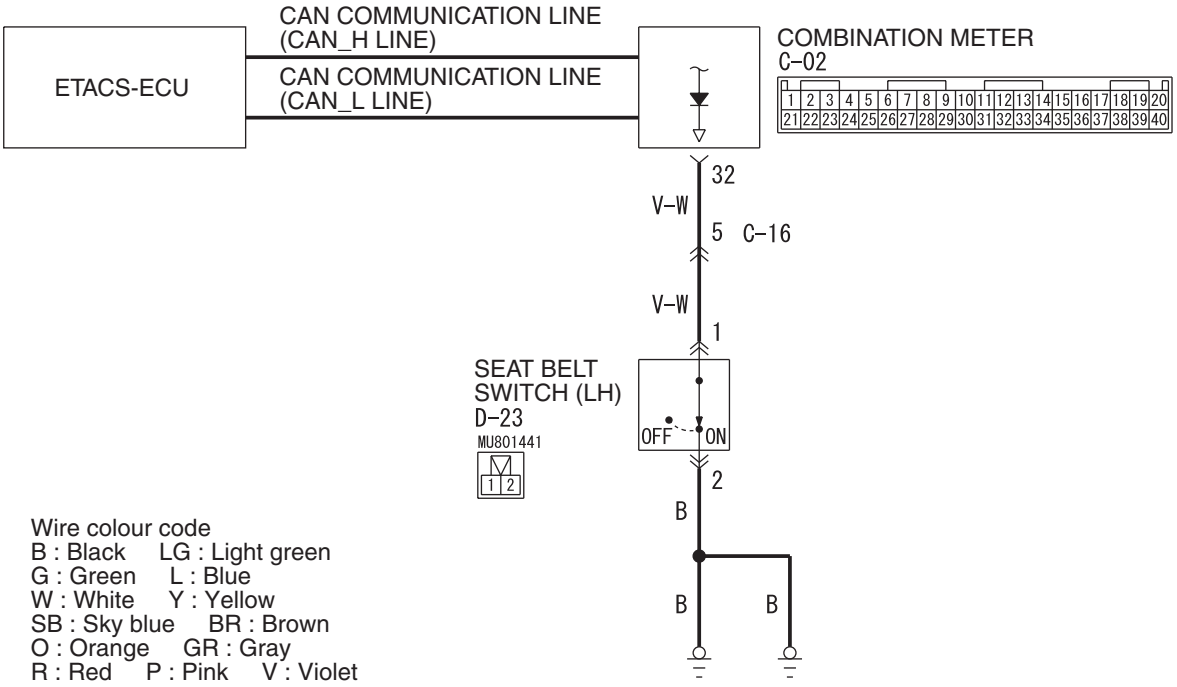

COMMENTS ON TROUBLE SYMPTOM

Input signal from the driver's seat belt switch signal is used to operate the central door locking function. If the signal is abnormal, the central door locking function will not work normally.

POSSIBLE CAUSES

- Malfunction of the driver's seat belt switch
- Malfunction of the ETACS-ECU
- Malfunction of the combination meter
- Damaged harness wires and connectors

DIAGNOSTIC PROCEDURE

Step 1. M.U.T.-III CAN bus diagnostics

Use the M.U.T.-III to diagnose the CAN bus lines.

Q: Is the check result normal?
YES : Go to Step 2.
NO : Repair the CAN bus line (Refer to GROUP 54F – Troubleshooting P.54F-13).

Step 2. M.U.T.-III diagnosis code

Check whether the combination meter-related diagnosis code is set.

Q: Is the diagnosis code set?
YES : Diagnose the combination meter (Refer to GROUP 54A – Combination meter P.54A-55).
NO : Go to Step 3.

Main Index
Group TOC

Step 3. Connector check: D-23 seat belt switch (LH) connector

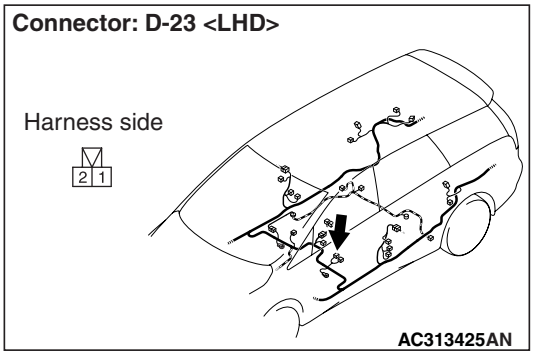

Q: Is the check result normal?
YES : Go to Step 4.
NO : Repair the defective connector.

Step 4. Check the seat belt switch (LH).

Refer to GROUP 52A – Front seat belt P.52A-38.

Q: Is the check result normal?
YES : Go to Step 5.
NO : Replace the inner seat belt (driver's side).

Step 5. Resistance measurement at the D-23 seat belt switch (LH) connector.

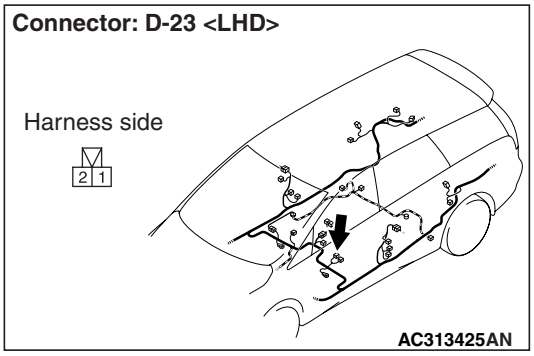

(1) Disconnect the connector, and measure at the wiring harness side.

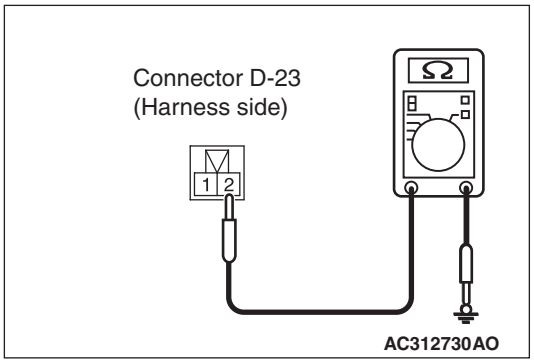

(2) Resistance between D-23 seat belt switch (LH) connector terminal No.2 and body earth

OK: 2 Ω or less

Q: Is the check result normal?
YES : Go to Step 7.
NO : Go to Step 6.

Step 6. Check the wiring harness between D-23 seat belt switch (LH) connector terminal No.2 and body earth.

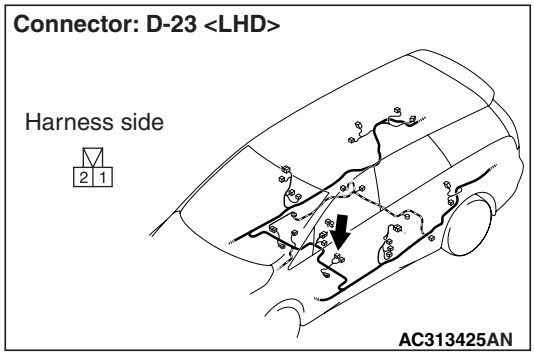

- Check the earth wires for open circuit.

Q: Is the check result normal?
YES : Replace the inner seat belt (driver's side).
NO : Repair the wiring harness.

Step 7. Connector check: C-02 combination meter connector

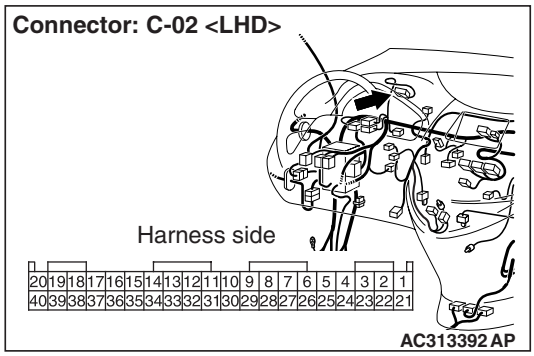

Q: Is the check result normal?
YES : Go to Step 8.
NO : Repair the defective connector.

Main Index
Group TOC

Step 8. Check the wiring harness from D-23 seat belt switch (LH) terminal No.1 to C-02 combination meter connector terminal No.32.

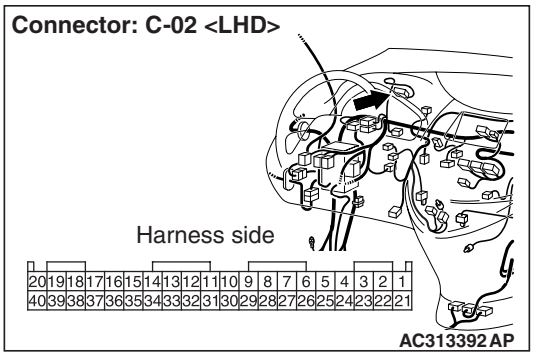

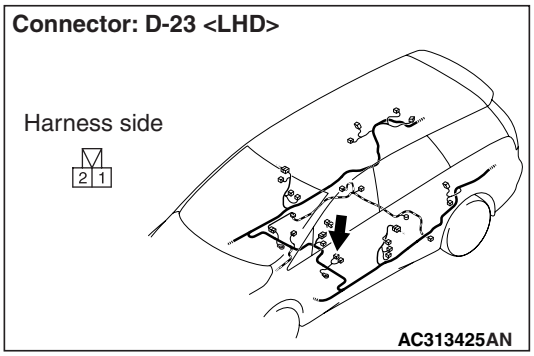

NOTE:

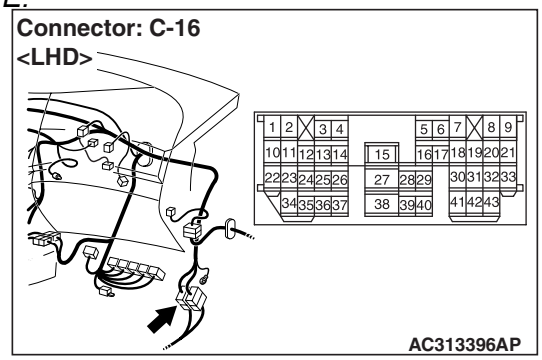

Prior to the wiring harness inspection, check intermediate connector C-16, and repair if necessary.

- Check the input line for open circuit.

Q: Is the check result normal?

YES : Go to Step 9.

NO : Repair the wiring harness.

Step 9. ETACS switch data by using the SWS monitor

Check the input signal from the driver's seat belt switch.

- Ignition switch: ON
- Driver's seat belt switch: ON (Unfastened) → OFF (Fastened)

Item No.	Item name	Normal condition
Item 12	Driver's seat belt switch	from ON to OFF

OK: Normal condition is displayed.

Q: Is the check result normal?

YES : The trouble can be an intermittent malfunction (Refer to GROUP 00 – How to Cope with Intermittent Malfunction P.00-5).

NO : Go to Step 10.

Step 10. Retest the system.

After the ETACS-ECU is replaced, check that the driver's seat belt switch signal is received.

(1) Replace the ETACS-ECU.

(2) Check that the driver's seat belt switch signal is received.

Q: Is the check result normal?

YES : The trouble can be an intermittent malfunction (Refer to GROUP 00 – How to Cope with Intermittent Malfunction P.00-5).

NO : Replace the combination meter.

Main Index
Group TOC

INSPECTION PROCEDURE P-17: The driver's seat belt switch signal is not received. <RH drive vehicles>

⚠ CAUTION
Whenever the ECU is replaced, ensure that the input signal circuit is normal.

Driver's Seat Belt Switch Input Circuit <RHD>

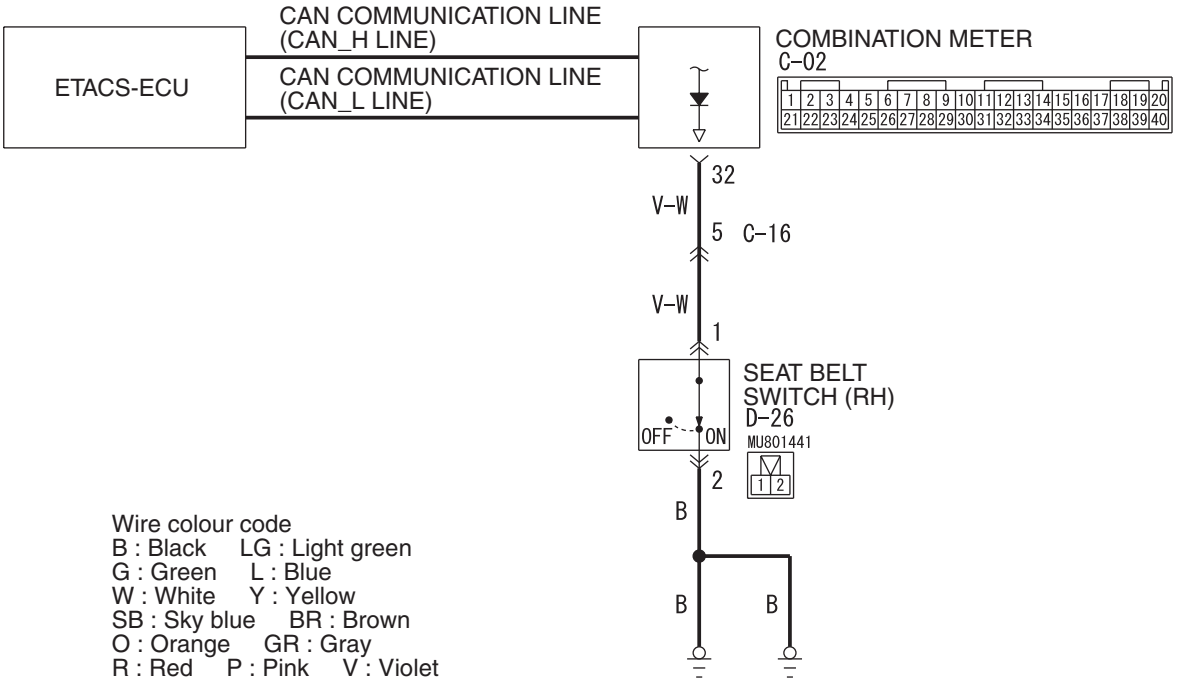

COMMENTS ON TROUBLE SYMPTOM

Input signal from the driver's seat belt switch signal is used to operate the central door locking function. If the signal is abnormal, the central door locking function will not work normally.

POSSIBLE CAUSES

- Malfunction of the driver's seat belt switch
- Malfunction of the ETACS-ECU
- Malfunction of the combination meter
- Damaged harness wires and connectors

DIAGNOSTIC PROCEDURE

Step 1. M.U.T.-III CAN bus diagnostics

Use the M.U.T.-III to diagnose the CAN bus lines.

Q: Is the check result normal?
YES : Go to Step 2.
NO : Repair the CAN bus line (Refer to GROUP 54F – Troubleshooting P.54F-13).

Step 2. M.U.T.-III diagnosis code

Check whether the combination meter-related diagnosis code is set.

Q: Is the diagnosis code set?
YES : Diagnose the combination meter (Refer to GROUP 54A – Combination meter P.54A-55).
NO : Go to Step 3.

Main Index
Group TOC

Step 3. Connector check: D-26 seat belt switch (RH) connector

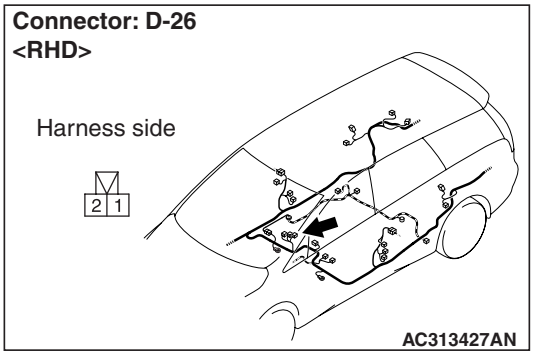

Q: Is the check result normal?
YES : Go to Step 4.
NO : Repair the defective connector.

Step 4. Check the seat belt switch (RH).

Refer to GROUP 52A – Front seat belt P.52A-38.

Q: Is the check result normal?
YES : Go to Step 5.
NO : Replace the inner seat belt (driver's side).

Step 5. Resistance measurement at the D-26 seat belt switch (RH) connector.

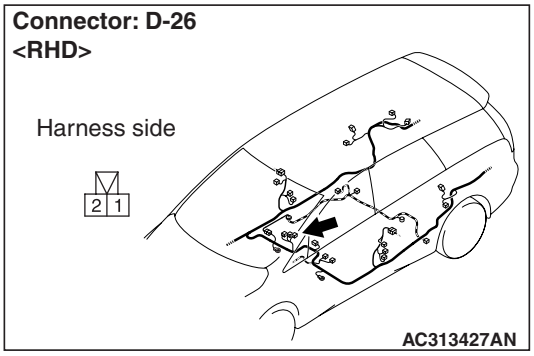

(1) Disconnect the connector, and measure at the wiring harness side.

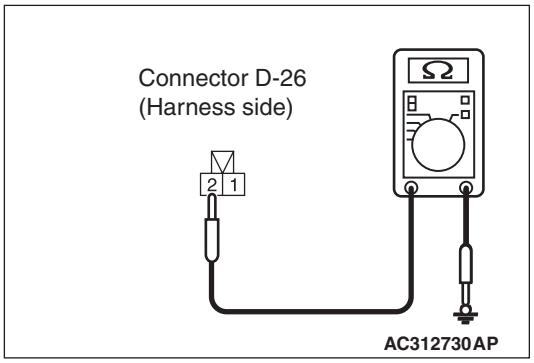

(2) Resistance between D-26 seat belt switch (LH) connector terminal No.2 and body earth

OK: 2 Ω or less

Q: Is the check result normal?
YES : Go to Step 7.
NO : Go to Step 6.

Step 6. Check the wiring harness between D-26 seat belt switch (RH) connector terminal No.2 and body earth.

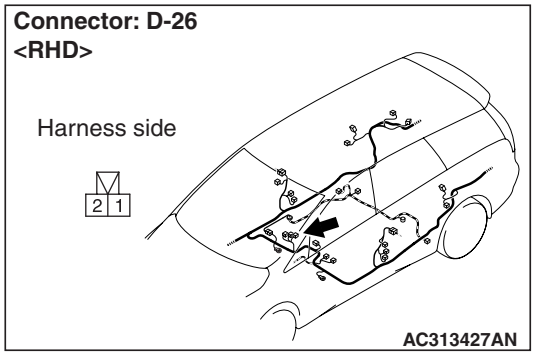

- Check the earth wires for open circuit.

Q: Is the check result normal?
YES : Replace the inner seat belt (driver's side).
NO : Repair the wiring harness.

Step 7. Connector check: C-02 combination meter connector

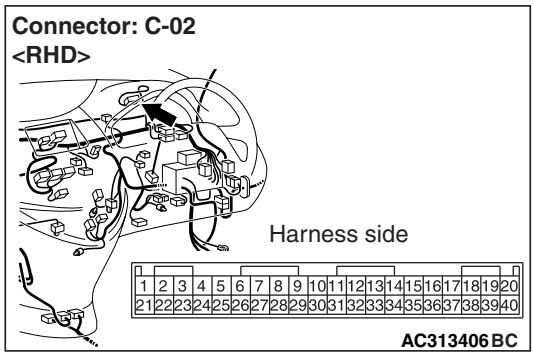

Q: Is the check result normal?
YES : Go to Step 8.
NO : Repair the defective connector.

Main Index
Group TOC

Step 8. Check the wiring harness from D-26 seat belt switch (RH) terminal No.1 to C-02 combination meter connector terminal No.32.

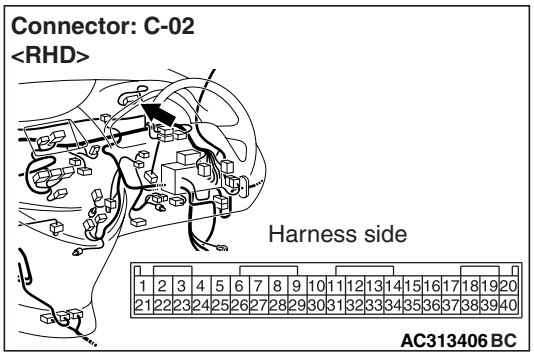

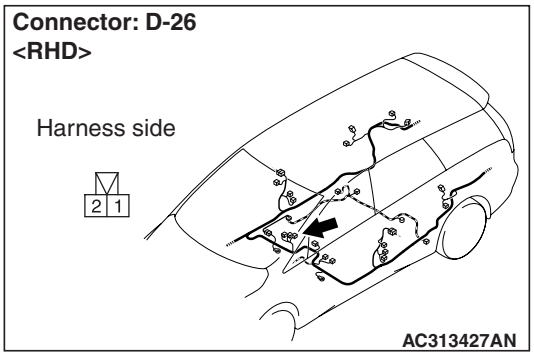

NOTE:

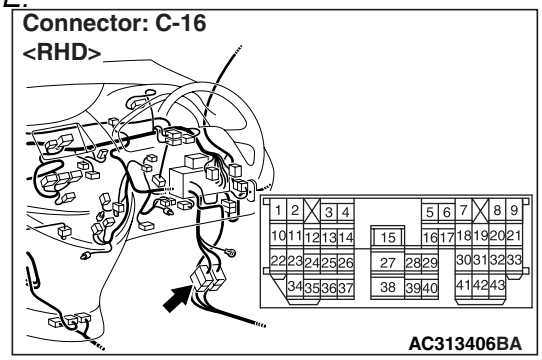

Prior to the wiring harness inspection, check intermediate connector C-16, and repair if necessary.

- Check the input line for open circuit.

Q: Is the check result normal?

YES : Go to Step 9.

NO : Repair the wiring harness.

Step 9. ETACS switch data by using the SWS monitor

Check the input signal from the driver's seat belt switch.

- Ignition switch: ON
- Driver's seat belt switch: ON (Unfastened) → OFF (Fastened)

Item No.	Item name	Normal condition
Item 12	Driver's seat belt switch	from ON to OFF

OK: Normal condition is displayed.

Q: Is the check result normal?

YES : The trouble can be an intermittent malfunction (Refer to GROUP 00 – How to Cope with Intermittent Malfunction P.00-5).

NO : Go to Step 10.

Step 10. Retest the system.

After the ETACS-ECU is replaced, check that the driver's seat belt switch signal is received.

(1) Replace the ETACS-ECU.

(2) Check that the driver's seat belt switch signal is received.

Q: Is the check result normal?

YES : The trouble can be an intermittent malfunction (Refer to GROUP 00 – How to Cope with Intermittent Malfunction P.00-5).

NO : Replace the combination meter.

Main Index
Group TOC

INSPECTION PROCEDURE P-18: The front passenger's seat belt switch signal is not received. <Vehicles for Australia and New Zealand >

⚠ CAUTION

Whenever the ECU is replaced, ensure that the input signal circuit is normal.

Passenger's Seat Belt Switch Input Circuit

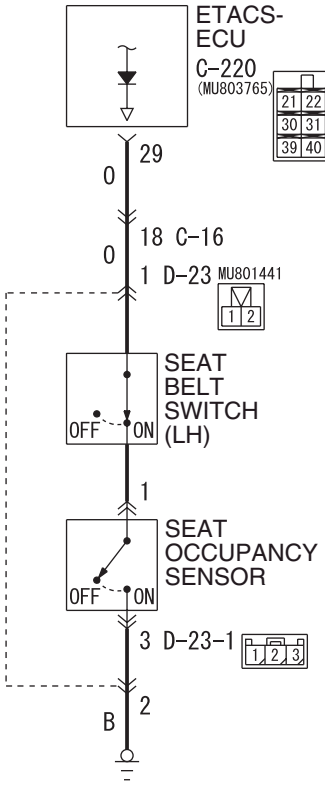

Wire colour code
B : Black LG : Light green G : Green L : Blue W : White Y : Yellow SB : Sky blue
BR : Brown O : Orange GR : Gray R : Red P : Pink V : Violet

W4X54X092A

COMMENTS ON TROUBLE SYMPTOM

Input signal from the front passenger's seatbelt switch is used to operate the central door locking function. If the signal is abnormal, the central door locking function will not work normally.

POSSIBLE CAUSES

- Malfunction of the passenger's seat belt switch
- Malfunction of the seat occupancy sensor
- Malfunction of the ETACS-ECU
- Damaged harness wires and connectors

Main Index
Group TOC

DIAGNOSTIC PROCEDURE

Step 1. Connector check: D-23 seat belt switch (LH) connector

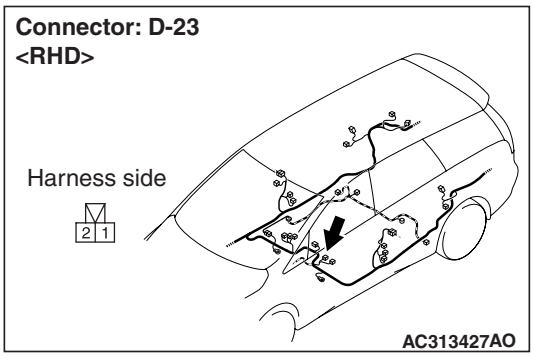

Q: Is the check result normal?
YES : Go to Step 2.
NO : Repair the defective connector.

Step 2. Check the seat belt switch (LH).

Refer to GROUP 52A – Front seat belt P.52A-38.

Q: Is the check result normal?
YES : Go to Step 3.
NO : Replace the inner seat belt (front passenger's side).

Step 3. Connector check: D-23-1 seat occupancy sensor connector

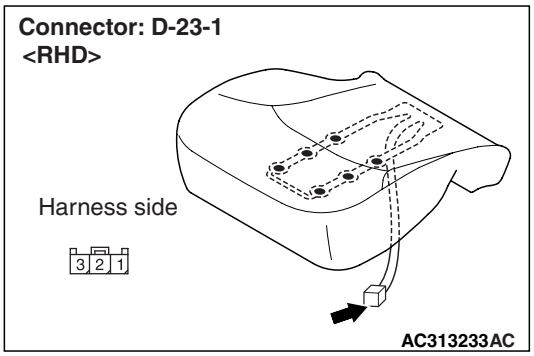

Q: Is the check result normal?
YES : Go to Step 4.
NO : Repair the defective connector.

Step 4. Check the seat occupancy sensor.

Refer to GROUP 52A – Front seat P.52A-22.

Q: Is the check result normal?
YES : Go to Step 5.
NO : Replace the seat occupancy sensor.

Step 5. Resistance measurement at the D-23-1 seat occupancy sensor connector.

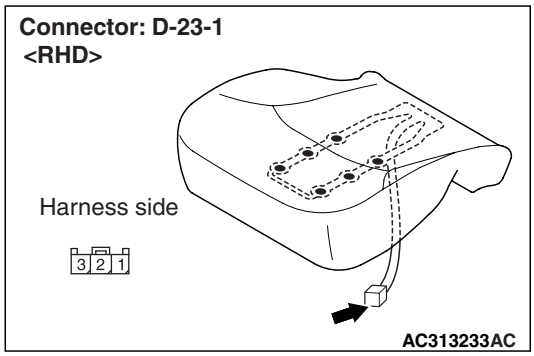

(1) Disconnect the connector, and measure at the wiring harness side.

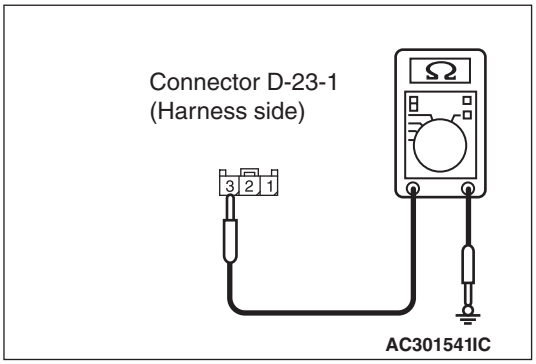

(2) Resistance between D-23-1 seat occupancy sensor connector terminal No.3 and body earth

OK: 2 Ω or less

Q: Is the check result normal?
YES : Go to Step 7.
NO : Go to Step 6.

Step 6. Check the wiring harness between D-23-1 seat occupancy sensor connector terminal No.3 and body earth.

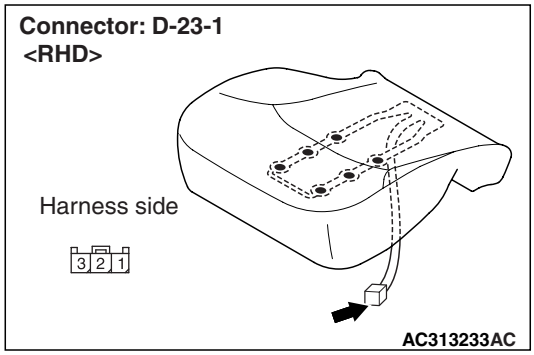

- Check the earth wires for open circuit.

Q: Is the check result normal?
YES : Replace the inner seat belt (front passenger's side).
NO : Repair the wiring harness.

Main Index
Group TOC

Step 7. Connector check: C-220 ETACS-ECU connector

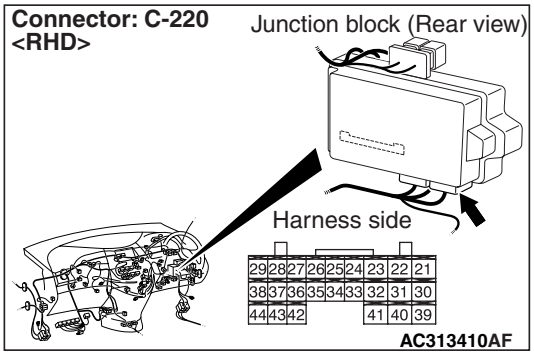

Q: Is the check result normal?
YES : Go to Step 8.
NO : Repair the defective connector.

Step 8. Check the wiring harness from D-23-1 seat occupancy sensor connector terminal No.1 to C-220 ETACS-ECU connector terminal No.29.

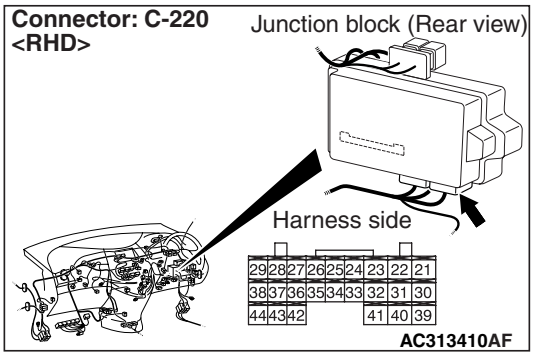

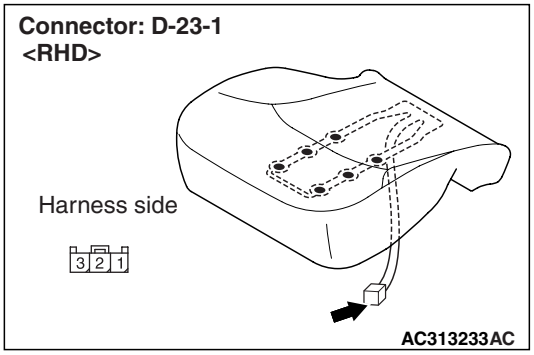

NOTE:

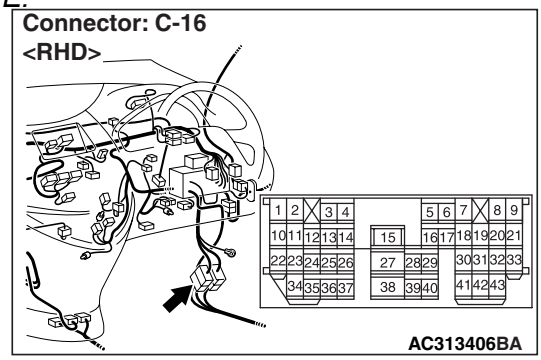

Prior to the wiring harness inspection, check intermediate connector C-16, and repair if necessary.

- Check the input line for open circuit.

Q: Is the check result normal?
YES : Go to Step 9.
NO : Repair the wiring harness or replace the inner seat belt (front passenger's side).

Step 9. ETACS switch data by using the SWS monitor

Check the input signal from the front passenger's seat belt switch.

- Ignition switch: ON
- Passenger’s seat belt switch: ON (Unfastened)
- Seat occupancy sensor: ON (Seat occupied)

Item No.	Item name	Normal condition
Item 43	Passenger’s seat belt switch	ON

Check that the M.U.T.-III displays normal condition when the condition above is changed to the condition below.

- Passenger’s seat belt switch: OFF (seat belt fastened) or seat occupancy sensor: OFF (seat not occupied)

Item No.	Item name	Normal condition
Item 43	Passenger’s seat belt switch	OFF

OK: Normal condition is displayed.

Q: Is the check result normal?
YES : The trouble can be an intermittent malfunction (Refer to GROUP 00 – How to Cope with Intermittent Malfunction P.00-5).
NO : Replace the ETACS-ECU.

Main Index
Group TOC

Inspection Procedure P-19: Signal is not received from the electric remote controlled mirror switch (folding/unfolding switch).

⚠ CAUTION
Whenever the ECU is replaced, ensure that the input signal circuit is normal.

Remote Controlled Mirror Switch Input Circuit

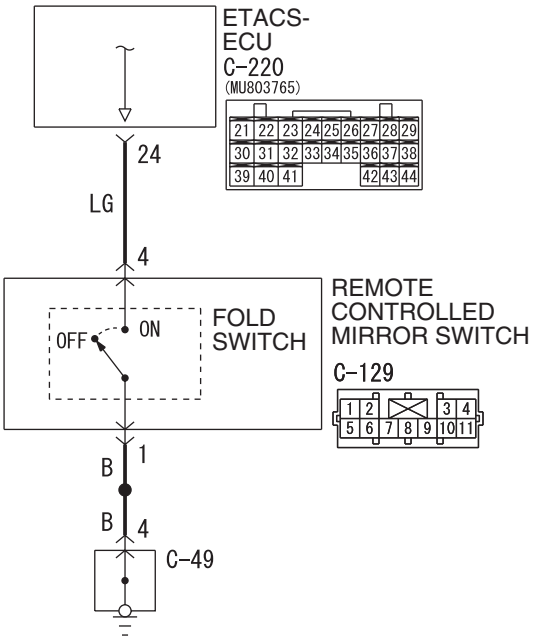

Wire colour code
B : Black LG : Light green G : Green L : Blue W : White Y : Yellow SB : Sky blue
BR : Brown O : Orange GR : Grey R : Red P : Pink V : Violet PU : Purple

W6X54X024A

COMMENTS ON TROUBLE SYMPTOM

The electric-folding door mirrors work in accordance with the input signal from the remote controlled mirror switch. If the input signal is abnormal, the door mirrors will not work normally.

POSSIBLE CAUSES

- Malfunction of the remote controlled mirror switch
- Malfunction of the ETACS-ECU
- Damaged harness wires and connectors

Main Index
Group TOC

DIAGNOSIS PROCEDURE

Step 1. Connector check: C-129 remote controlled mirror switch connector

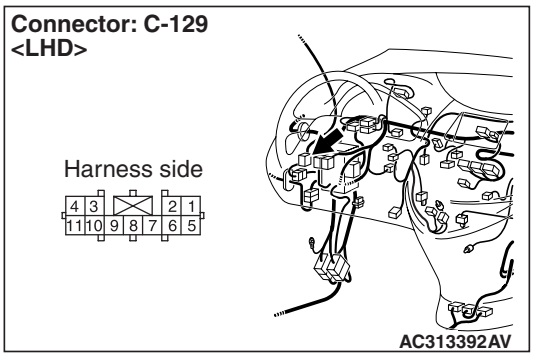

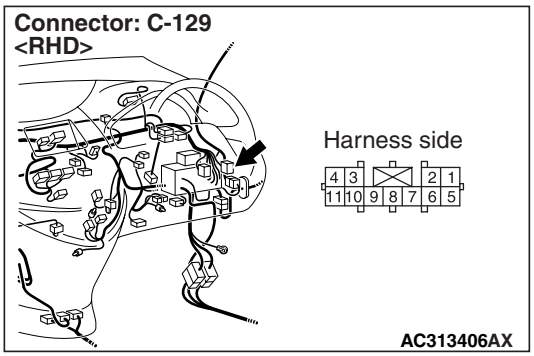

Q: Is the check result normal?
YES : Go to Step 2.
NO : Repair the connector.

Step 2. Check the remote controlled mirror switch.

Refer to GROUP 51 – Door mirror P.51-38.

Q: Is the check result normal?
YES : Go to Step 3.
NO : Replace the remote controlled mirror switch.

Step 3. Resistance measurement at the C-129 remote controlled mirror switch connector.

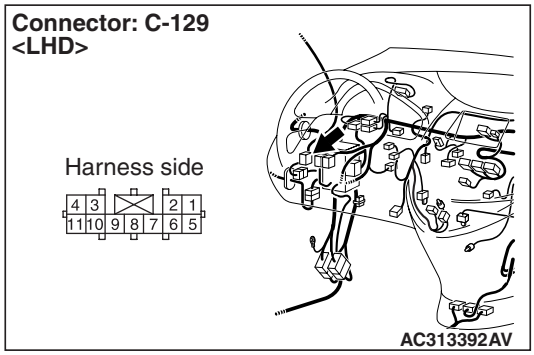

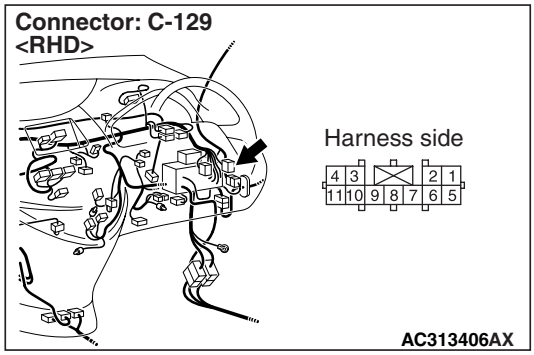

(1) Disconnect the connector, and measure at the wiring harness side.

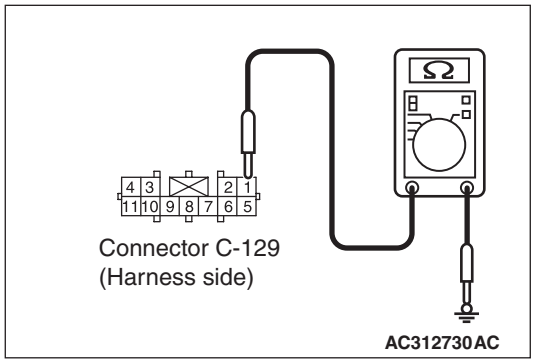

(2) Continuity between C-129 remote controlled mirror switch connector terminal No.1 and body earth

OK: 2Ω or less

Q: Is the check result normal?
YES : Go to Step 6.
NO : Go to Step 4.

Main Index
Group TOC

Step 4. Connector check: C-49 earth connector

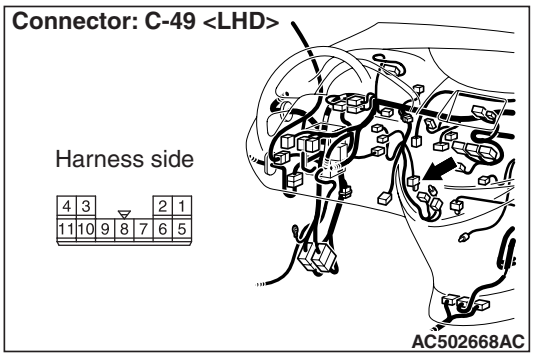

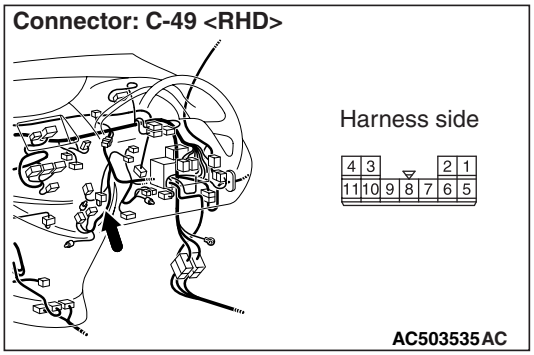

Q: Is the check result normal?
YES : Go to Step 5.
NO : Repair the connector.

Step 5. Check the wiring harness between C-129 remote controlled mirror switch connector terminal No.1 to C-49 earth connector terminal No.4.

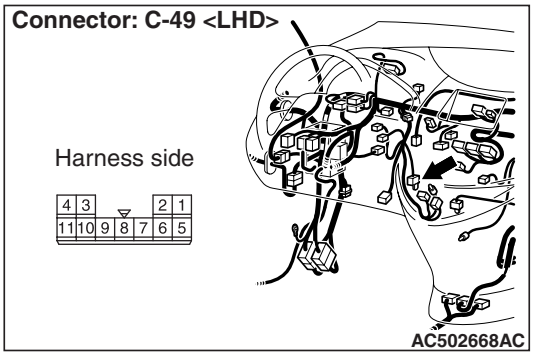

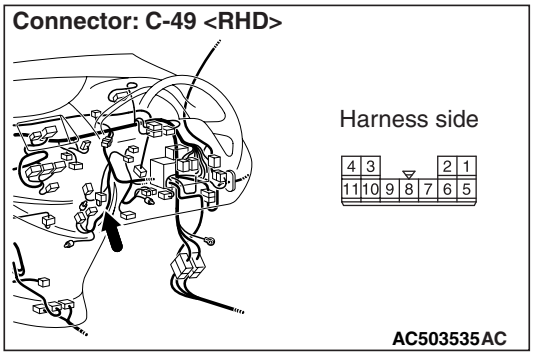

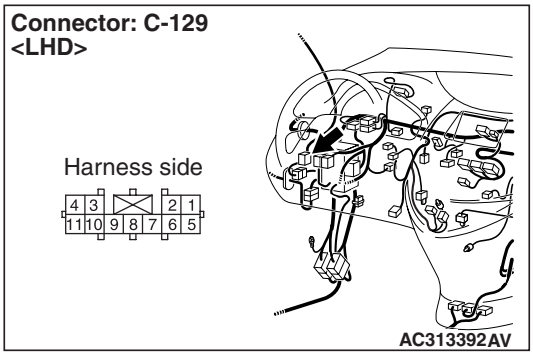

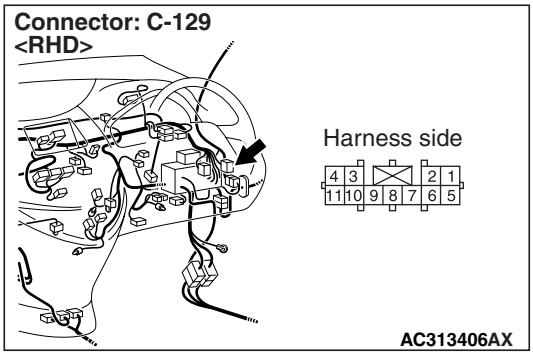

- Check the earth wires for open circuit.

Q: Is the check result normal?
YES : The trouble can be an intermittent malfunction (Refer to GROUP 00 – How to Cope with Intermittent Malfunction P.00-5).
NO : Repair the wiring harness.

Step 6. Connector check: C-220 ETACS-ECU connector

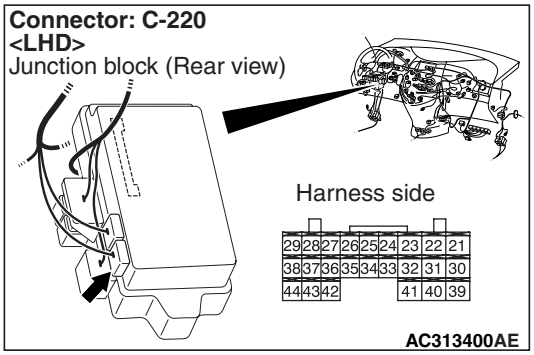

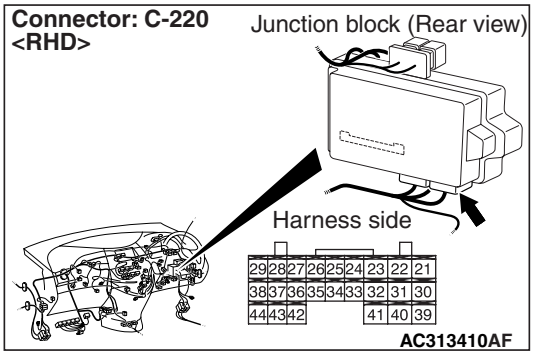

Q: Is the check result normal?
YES : Go to Step 7.
NO : Repair the connector.

Step 7. Check the wiring harness between C-129 remote controlled mirror switch connector terminal No.4 to C-220 ETACS-ECU connector terminal No.24.

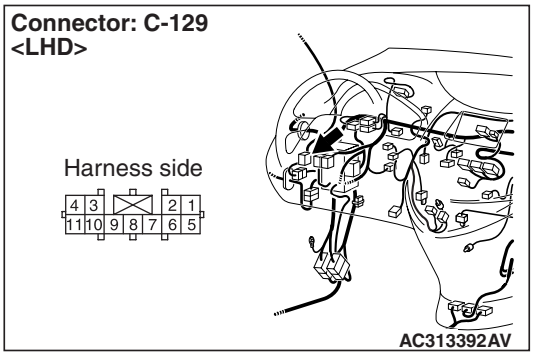

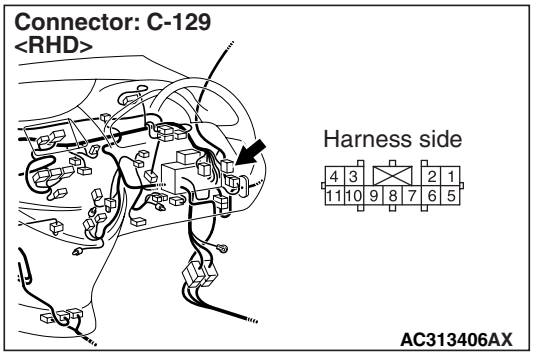

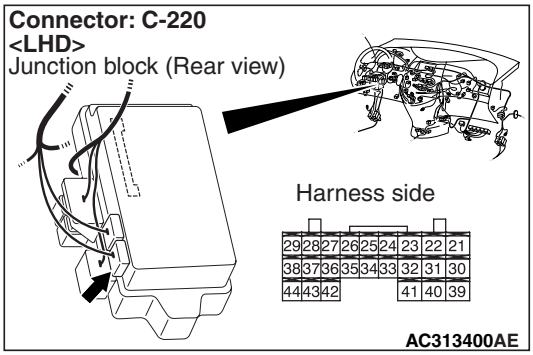

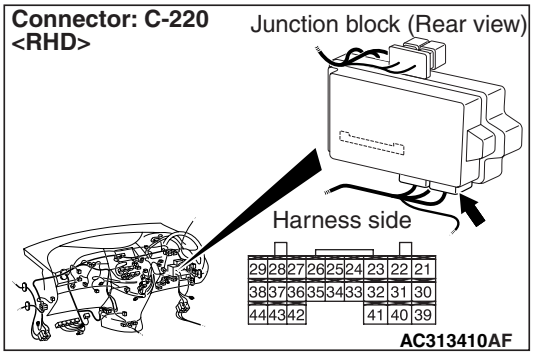

- Check the input line for open circuit.

Q: Is the check result normal?
YES : Go to Step 8.
NO : Repair the wiring harness.

Main Index
Group TOC

Step 8. ETACS switch data by using the SWS monitor

Check the input signal from the remote controlled mirror switch.

- Ignition switch: ON
- Remote controlled mirror (folding/unfolding) switch: from OFF to ON

Item No.	Item name	Normal condition
Item 14	Retractable mirror switch	OFF to ON (only when switch is operated)

OK: Normal condition is displayed.

Q: Is the check result normal?

YES : . The trouble can be an intermittent malfunction (Refer to GROUP 00 – How to Cope with Intermittent Malfunction P.00-5).

NO : . Replace the ETACS-ECU.

Main Index
Group TOC

INSPECTION PROCEDURE P-20: The interior lamp "all on" or "all off" switch signal is not sent to the ETACS-ECU.

⚠ CAUTION

Whenever the ECU is replaced, ensure that the input signal circuit is normal.

Interior Lamp Input Circuit

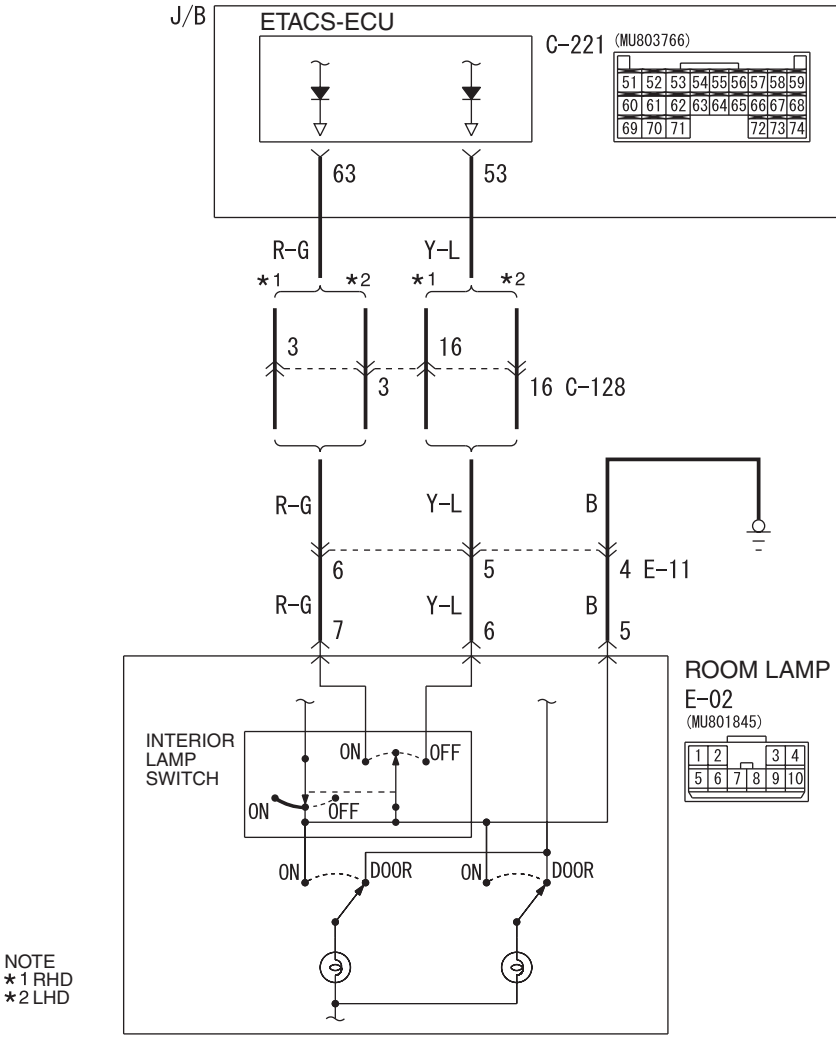

Wire colour code
B : Black LG : Light green G : Green L : Blue W : White Y : Yellow SB : Sky blue
BR : Brown O : Orange GR : Gray R : Red P : Pink V : Violet

W4X54E169A

COMMENTS ON TROUBLE SYMPTOM

Input signals from the interior lamp switches are used to operate the interior lamps. If the signals are abnormal, the interior lamps will not illuminate and extinguish normally.

POSSIBLE CAUSES

- Malfunction of the room lamp
- Malfunction of the ETACS-ECU
- Damaged harness wires and connectors

Main Index
Group TOC

DIAGNOSIS PROCEDURE

Step 1. Connector check: E-02 room lamp connector

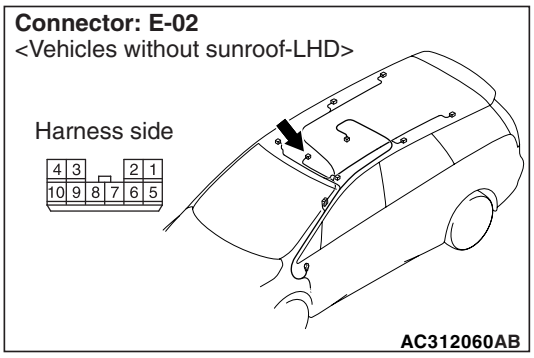

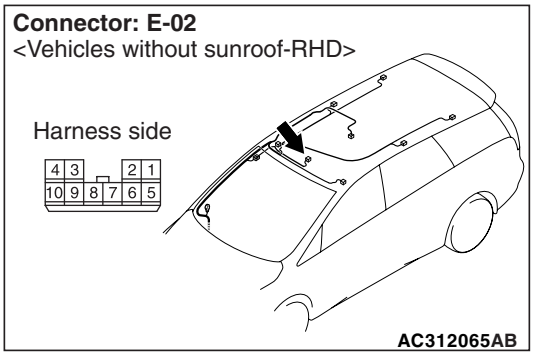

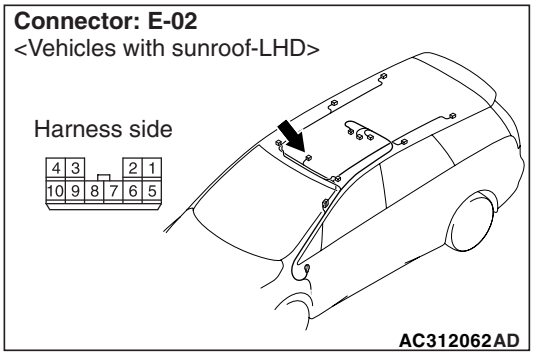

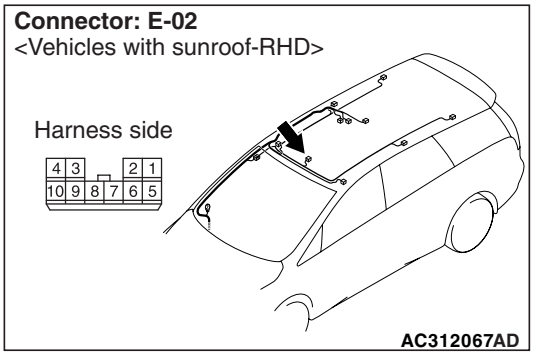

Q: Is the check result normal?
YES : Go to Step 2.
NO : Repair the defective connector.

Step 2. Check the room lamp.

Refer to GROUP 54A – Room lamp P.54A-151.

Q: Is the check result normal?
YES : Go to Step 3
NO : Replace the room lamp.

Step 3. Resistance measurement at the E-02 room lamp connector

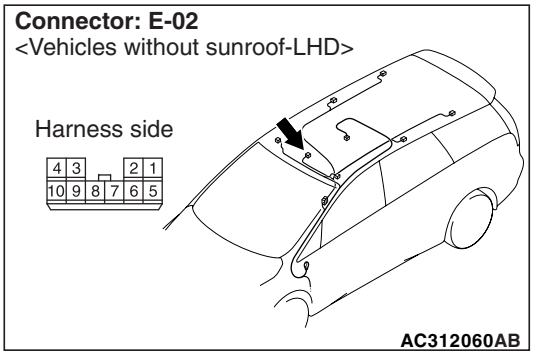

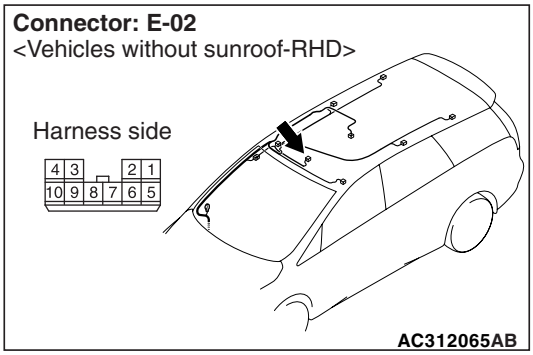

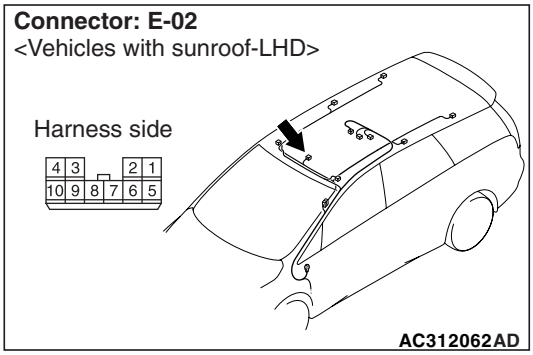

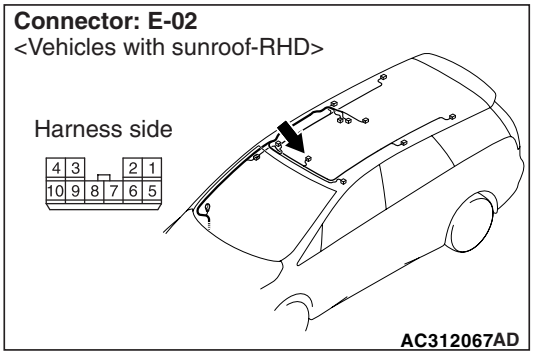

(1) Disconnect the connector, and measure at the wiring harness side.

Main Index
Group TOC

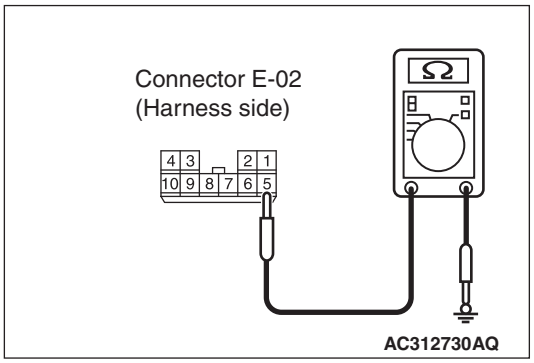

(2) Resistance between E-02 room lamp connector terminal No.5 and body earth

OK: 2 Ω or less

Q: Is the check result normal?

YES : Go to Step 5.

NO : Go to Step 4.

Step 4. Check the wiring harness between E-02 room lamp connector terminal No.5 and body earth

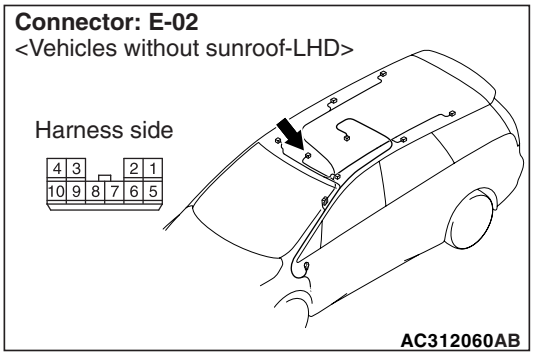

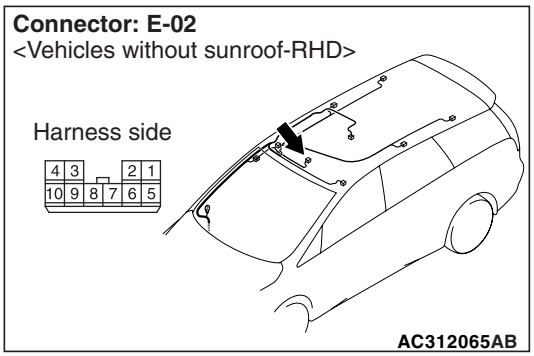

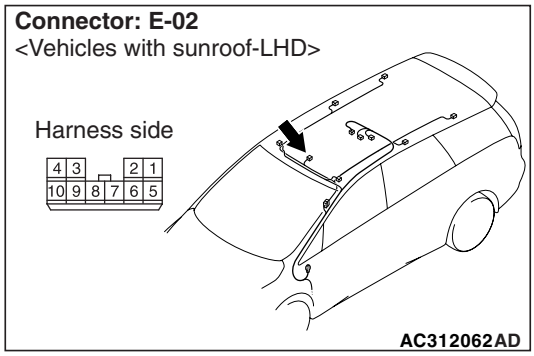

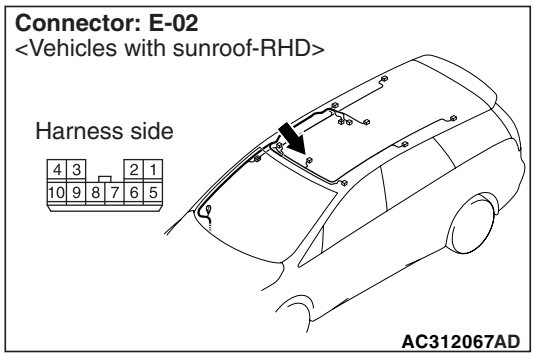

NOTE:

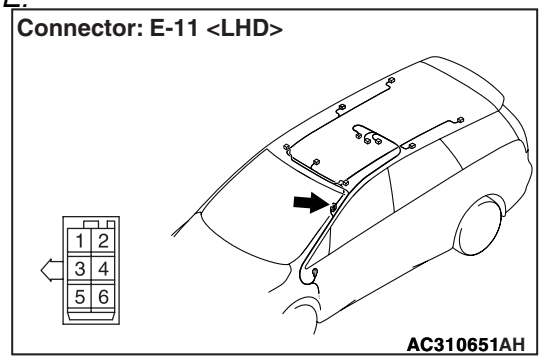

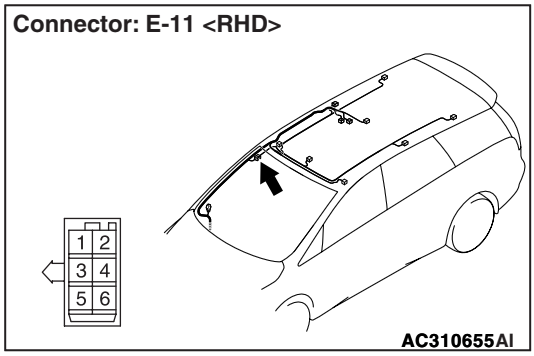

Prior to the wiring harness inspection, check intermediate connector E-11, and repair if necessary.

- Check the earth wires for open circuit.

Q: Is the check result normal?

YES : The trouble can be an intermittent malfunction (Refer to GROUP 00 – How to Cope with Intermittent Malfunction P.00-5).

NO : Repair the wiring harness.

Main Index
Group TOC

Step 5. Connector check: C-221 ETACS-ECU connector

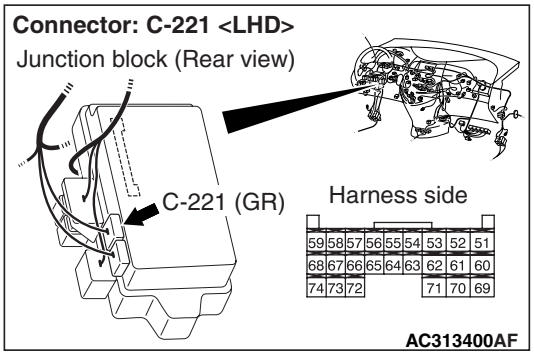

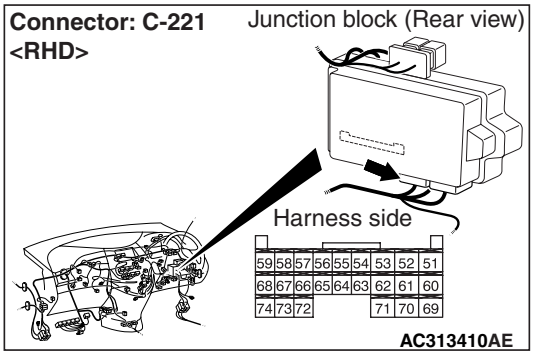

Q: Is the check result normal?

YES : Go to Step 6.

NO : Repair the defective connector.

Step 6. Check the wiring harness from E-02 room lamp connector terminal Nos. 6 and 7 to C-221 ETACS-ECU connector terminal Nos. 53 and 63.

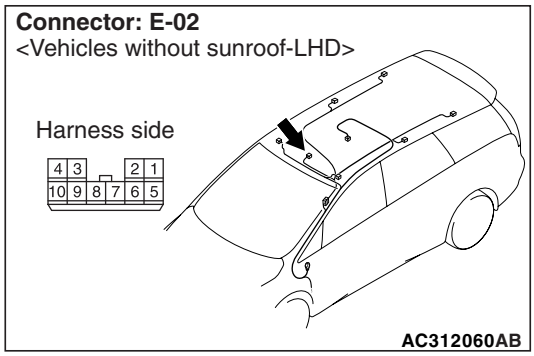

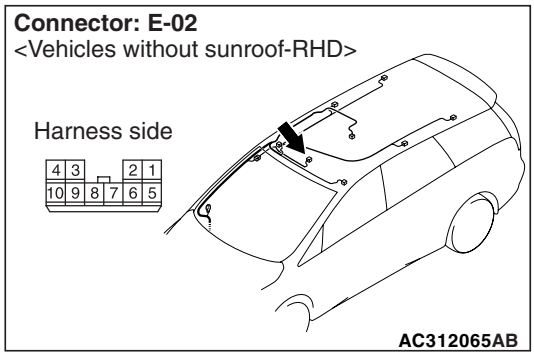

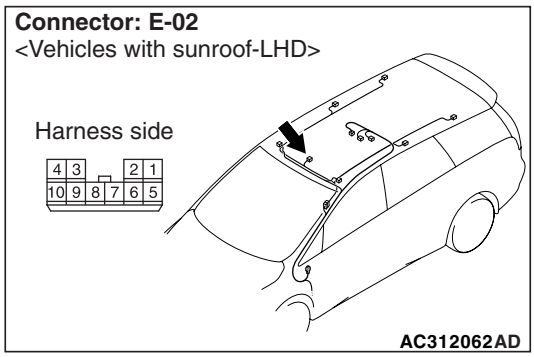

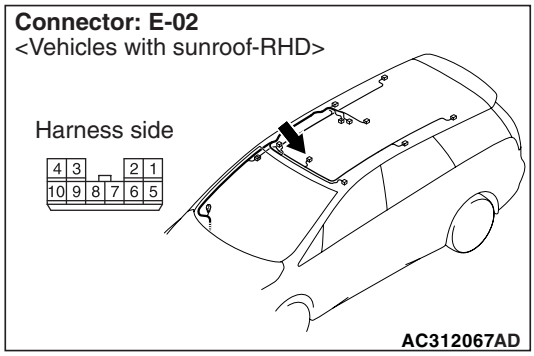

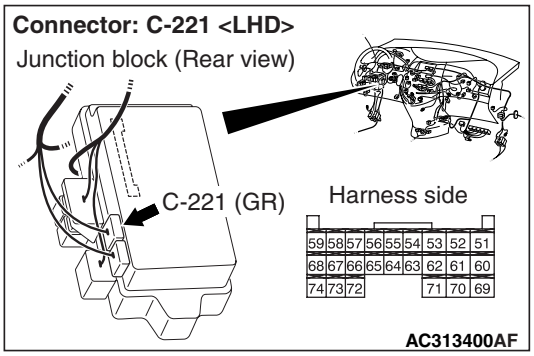

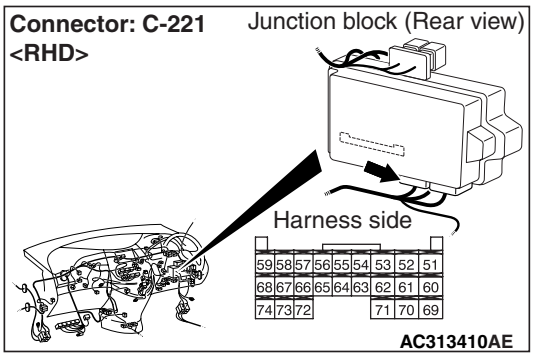

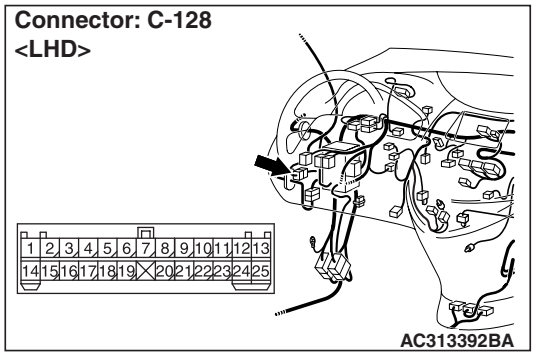

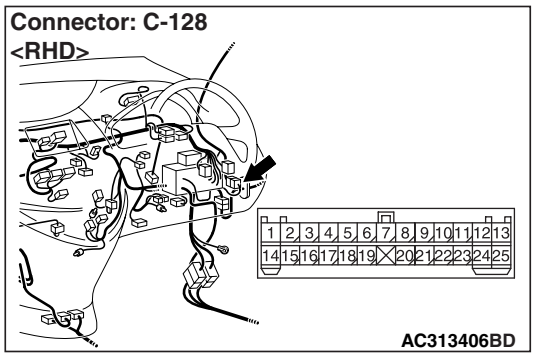

NOTE:

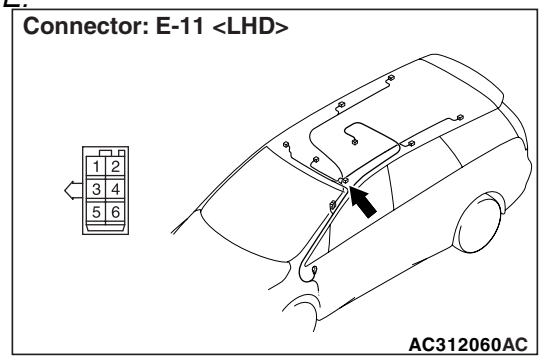

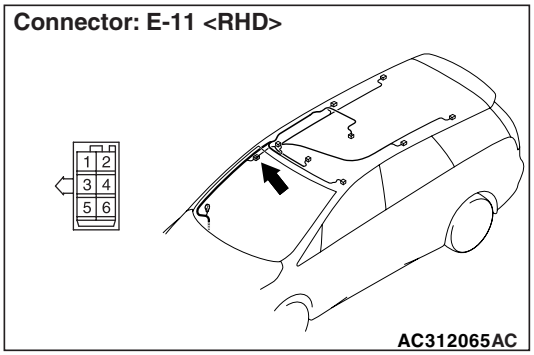

Prior to the wiring harness inspection, check intermediate connector E-11 and C-128, and repair if necessary.

- Check the input line for open circuit.

Q: Is the check result normal?

YES : Go to Step 7.

NO : Repair the wiring harness.

Step 7. ETACS switch data by using the SWS monitor

Check the input signal from the interior lamp switch.

- Interior lamp switch: from ON to OFF

Item No.	Item name	Normal condition
Item 31	Room lamp ALL ON switch	from ON to OFF
Item 32	Room lamp ALL OFF switch	from OFF to ON

OK: Normal condition is displayed.

Q: Is the check result normal?

YES : The trouble can be an intermittent malfunction (Refer to GROUP 00 – How to Cope with Intermittent Malfunction P.00-5).

NO : Replace the ETACS-ECU.

Main Index
Group TOC

INSPECTION PROCEDURE P-21: Each switch signal of the keyless entry transmitter is not received.

⚠ CAUTION
Whenever the ECU is replaced, ensure that the input signal circuit is normal.

Transmitter Input Circuit

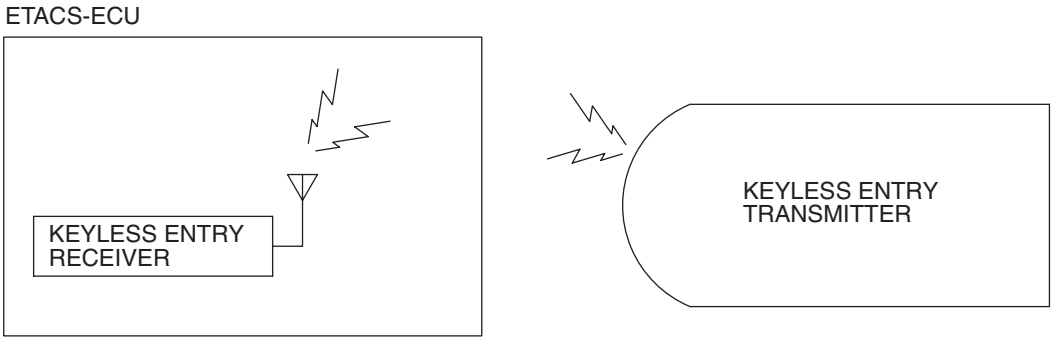

W3Z10E39AA

COMMENTS ON TROUBLE SYMPTOM

Input signal from the keyless entry transmitter is used to operate the keyless entry system. If the signal is abnormal, the keyless entry system will not work normally.

- Keyless entry system
- Keyless entry hazard answerback
- Multimode keyless entry system

POSSIBLE CAUSES

- Malfunction of the keyless entry transmitter
- Defective battery of the keyless entry transmitter
- Malfunction of the ETACS-ECU

DIAGNOSIS PROCEDURE

Step 1. Pulse check

Check whether the ETACS-ECU receives signal from a transmitter or not. For this check, you should use the 2-button-type transmitter (integrated with a key), which cover screw is silver and has already been registered.

NOTE: For how to register the keyless entry transmitter encrypted code, refer to GROUP 42 – On-vehicle Service P.42-65.

System switch	Check condition
Keyless entry transmitter "LOCK/UNLOCK" switch	When the switch is turned from off to on

OK: The M.U.T.-III sounds or the voltmeter needle fluctuates.

Q: Is the check result normal?
YES : Go to Step 2.
NO : Go to Step 4.

Step 2. Check the transmitter battery.

Refer to GROUP 42 – Keyless entry system P.42-69.

Q: Is the check result normal?
YES : Go to Step 3.
NO : Replace the keyless entry transmitter battery.

Step 3. Register the encrypted code, and then retest the system.

(1) Register the keyless entry transmitter again.
(2) Check that each signal is received from the keyless entry transmitter.

Q: Is the check result normal?
YES : The trouble can be an intermittent malfunction (Refer to GROUP 00 – How to Cope with Intermittent Malfunction P.00-5).
NO : Replace the keyless entry transmitter.

Step 4. Retest the system.

Check that each signal is received from the keyless entry transmitter.

Q: Is the check result normal?
YES : The trouble can be an intermittent malfunction (Refer to GROUP 00 – How to Cope with Intermittent Malfunction P.00-5).
NO : Replace the ETACS-ECU.

Main Index
Group TOC

INSPECTION PROCEDURE P-22: The interior lamp loaded signal is not detected.

⚠ CAUTION
Whenever the ECU is replaced, ensure that the input signal circuit is normal.

Interior Lamp Automatic Shut-off Function Circuit

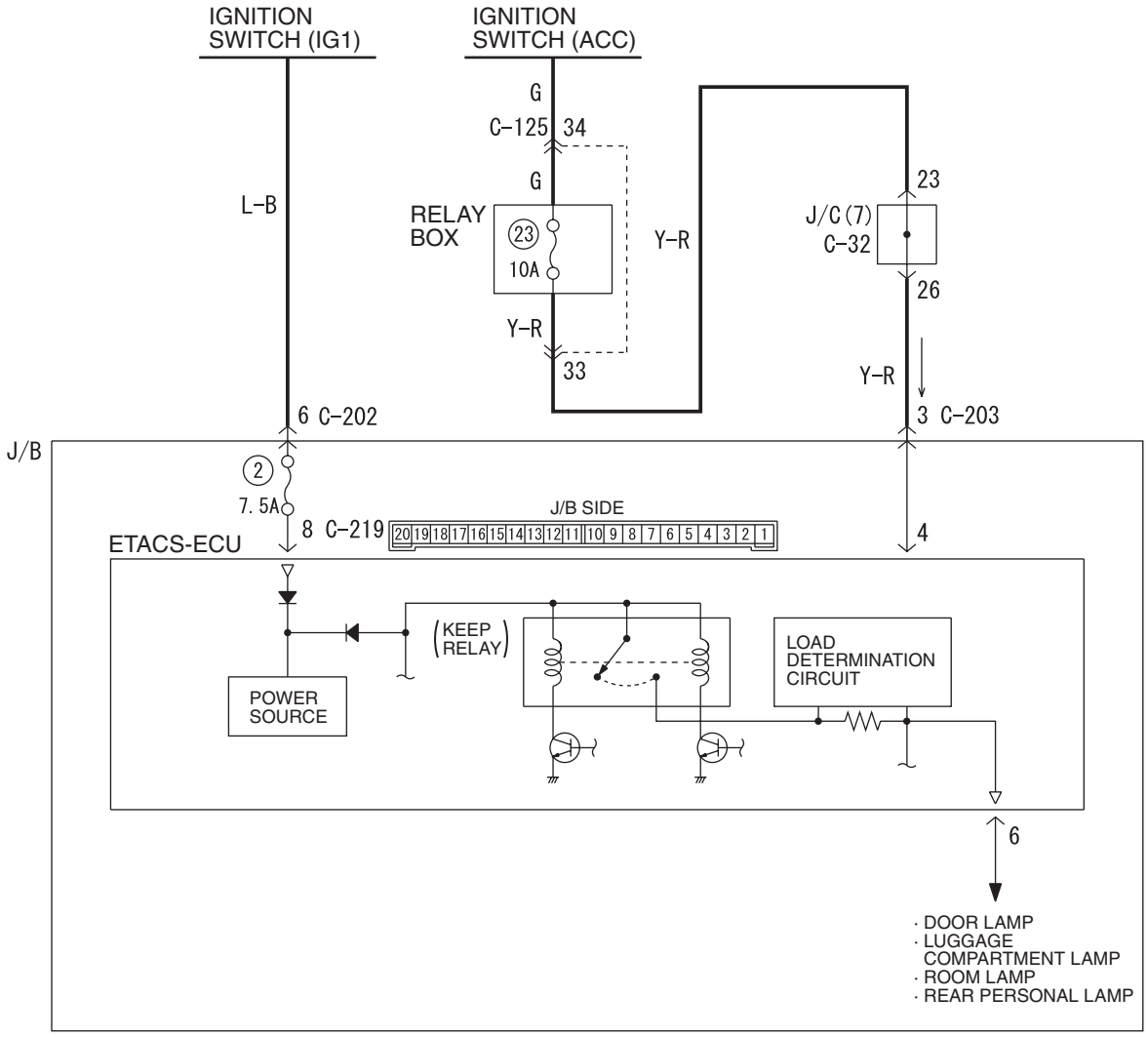

Wire colour code
B : Black LG : Light green G : Green L : Blue W : White Y : Yellow SB : Sky blue
BR : Brown O : Orange GR : Grey R : Red P : Pink V : Violet PU : Purple

W6X54X025A

COMMENTS ON TROUBLE SYMPTOM

The interior lamp automatic-shutdown function operates in accordance with the interior lamp loaded signal. If this signal is abnormal, the functions below will not work normally.

- Interior lamps
- Interior lamp automatic-shutdown function

POSSIBLE CAUSES

- Malfunction of the ETACS-ECU
- Damaged wiring harness or connector(s)

Main Index
Group TOC

DIAGNOSIS PROCEDURE

Step 1. ECU check by using the SWS monitor

Check that the power supply and earth lines to the ETACS-ECU and the SWS communication lines are normal.

- Ignition switch: OFF

ECUS TO BE CHECKED

- ETACS ECU

OK: "OK" is displayed on the "ETACS ECU" menu.

Q: Is the check result normal?

YES : Go to Step 2.

NO : Refer to Inspection Procedure A-3 "Communication with ETACS-ECU is impossible P.54C-51."

Step 2. Connector check: C-219 ETACS-ECU connector

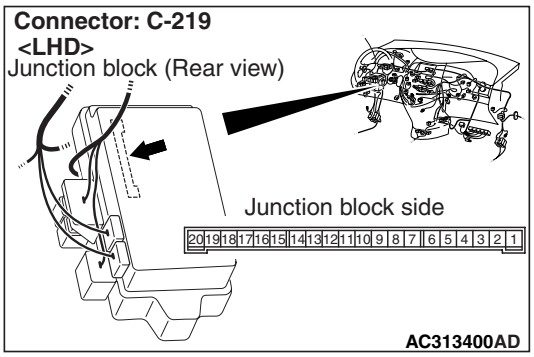

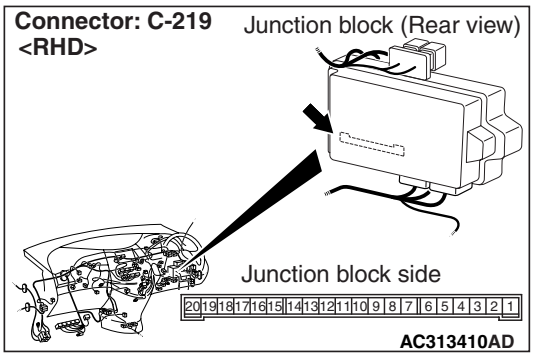

Q: Is the check result normal?

YES : Go to Step 3.

NO : Repair the defective connector.

Step 3. Voltage measurement at the C-219 ETACS-ECU connector.

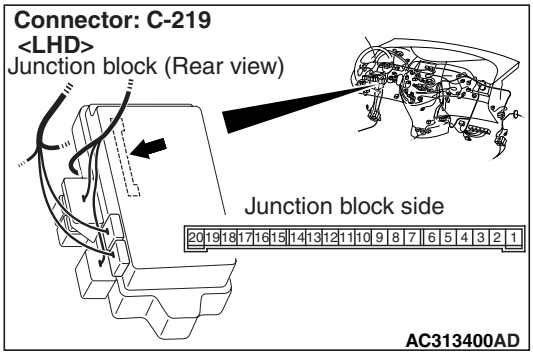

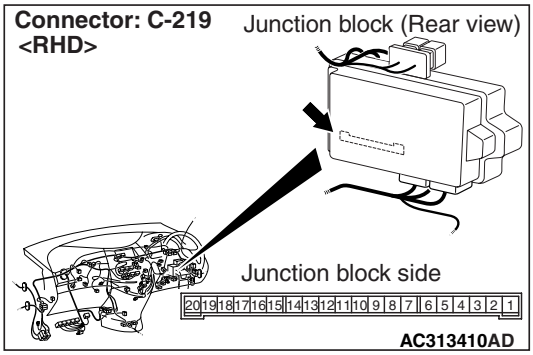

(1) Remove the ETACS-ECU, and measure at the junction block side.

(2) Turn the ignition switch to the ON position.

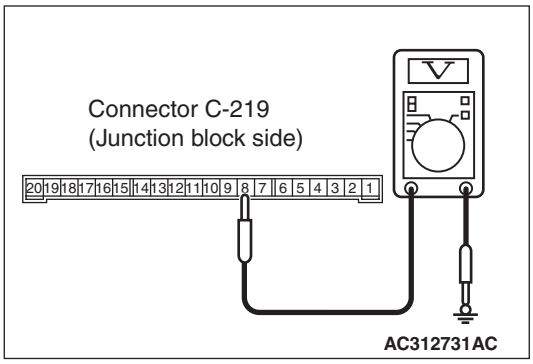

(3) Voltage between C-219 ETACS-ECU connector terminal No.8 and body earth

OK: System voltage

Q: Is the check result normal?

YES : Go to Step 5.

NO : Go to Step 4.

Step 4. Check the wiring harness between C-219 ETACS-ECU connector terminal No.8 and the ignition switch (IG1).

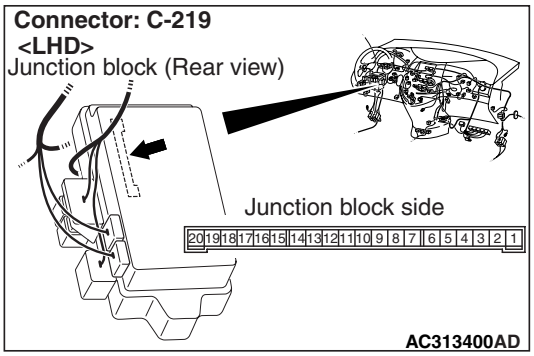

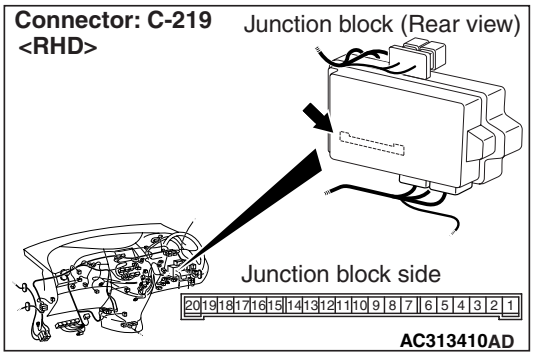

NOTE:

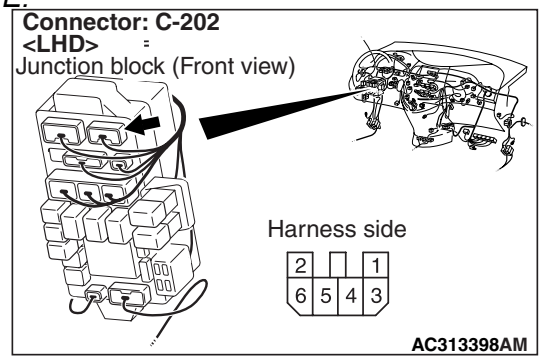

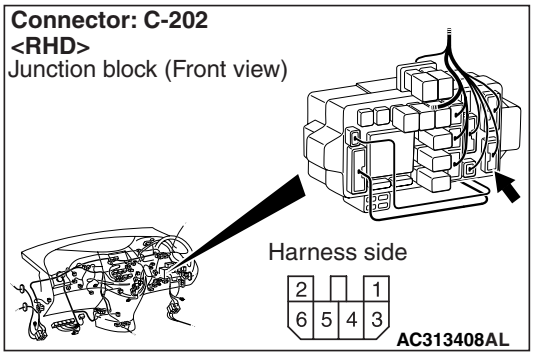

Prior to the wiring harness inspection, check junction block connector C-202, and repair if necessary.

- Check the power supply line to the ignition switch (IG1) for open circuit.

Q: Is the check result normal?

YES : The trouble can be an intermittent malfunction (Refer to GROUP 00 – How to Cope with Intermittent Malfunction P.00-5).

NO : Repair the wiring harness.

Step 5. Voltage measurement at the C-219 ETACS-ECU connector.

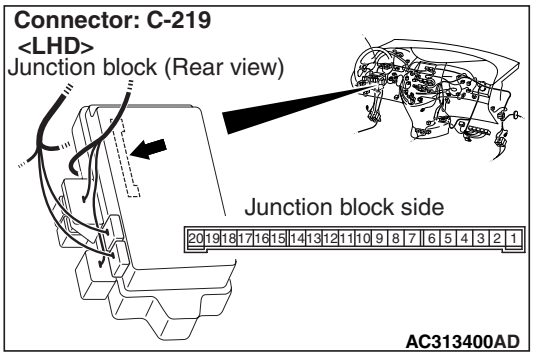

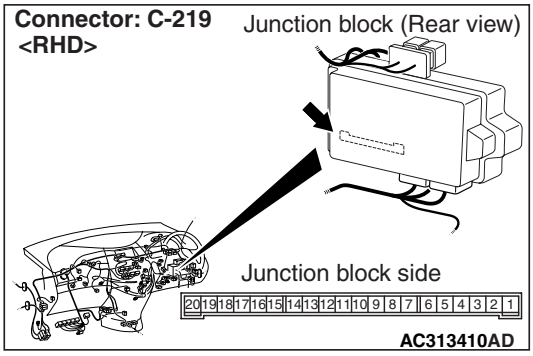

(1) Remove the ETACS-ECU, and measure at the junction block side.

(2) Turn the ignition switch to the ACC position.

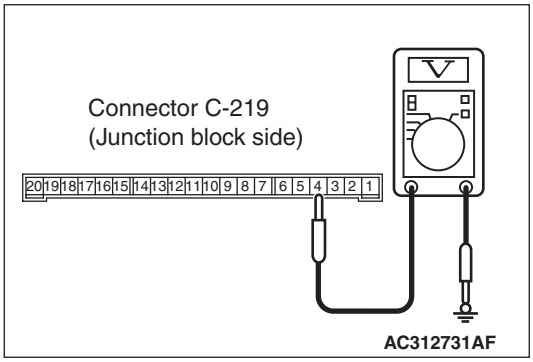

(3) Voltage between terminal 4 and body earth

OK: System voltage

Q: Is the check result normal?

YES : Go to Step 7.

NO : Go to Step 6.

Main Index
Group TOC

Step 6. Check the wiring harness between C-219 ETACS-ECU connector terminal No.4 and the ignition switch (ACC).

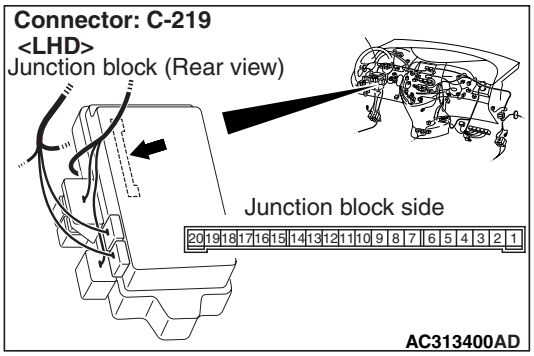

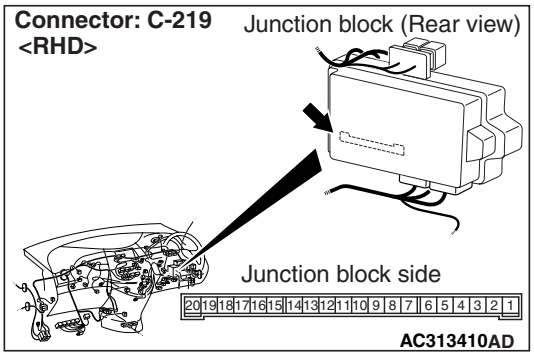

NOTE:

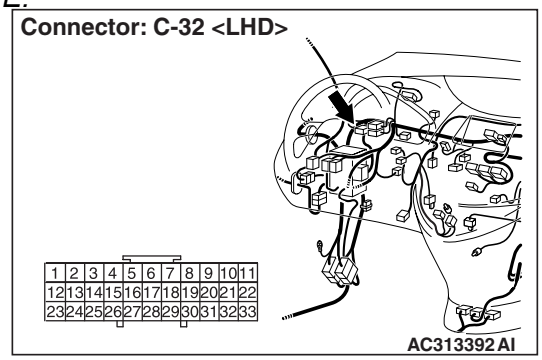

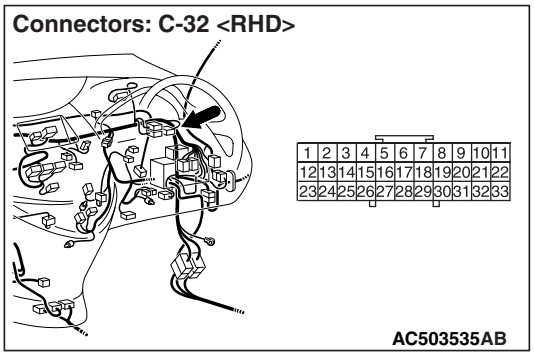

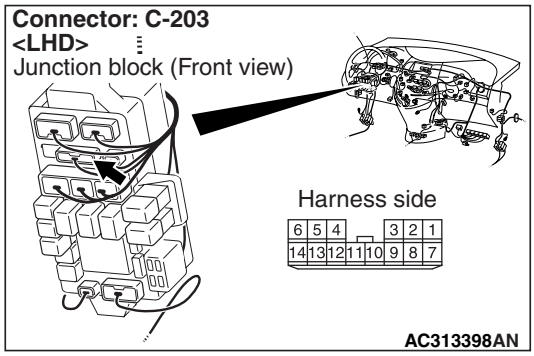

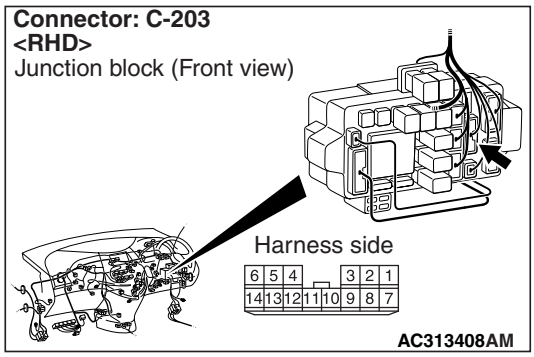

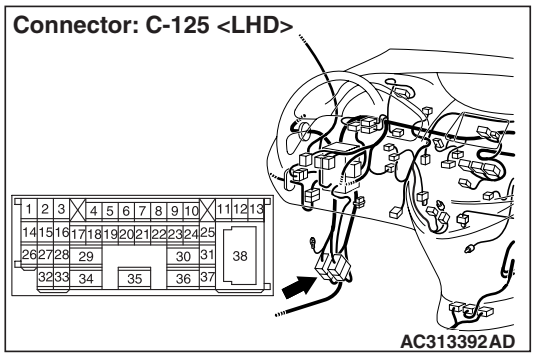

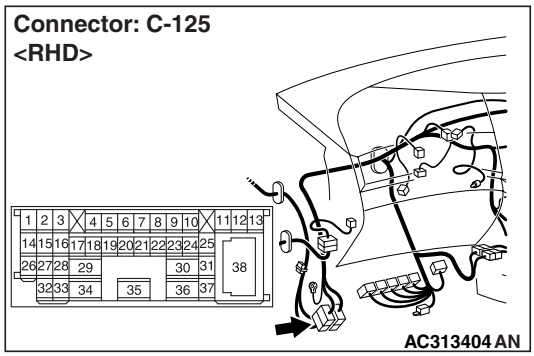

Prior to the wiring harness inspection, check joint connector C-32, junction block connector C-203 or intermediate connector C-125, and repair if necessary.

- Check the power supply line to the ignition switch (ACC) for open circuit.

Q: Is the check result normal?

YES : The trouble can be an intermittent malfunction (Refer to GROUP 00 – How to Cope with Intermittent Malfunction P.00-5).

NO : Repair the wiring harness.

Main Index
Group TOC

Step 7. Pulse check
Check the input of the interior lamp loaded signal.

System switch	Check condition
Interior lamp loaded signal	When a load is applied through multi-purpose fuse No.18

OK: The M.U.T.-III sounds or the voltmeter needle fluctuates.

Q: Is the check result normal?
YES : The trouble can be an intermittent malfunction (Refer to GROUP 00 – How to Cope with Intermittent Malfunction P.00-5).
NO : Replace the ETACS-ECU.

INSPECTION PROCEDURE P-23: The vehicle speed signal is not received.

⚠ CAUTION
Whenever the ECU is replaced, ensure that the input signal circuit is normal.

Speed Signal Input Circuit

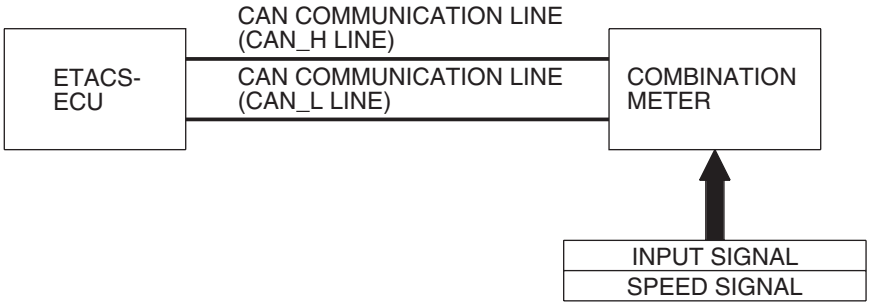

W4X54E218A

COMMENTS ON TROUBLE SYMPTOM

The vehicle speed signal is used to operate the functions below. If the signal is abnormal, these functions will not work normally.

- Windshield wiper and washer (vehicle speed-dependent wiper function)
- Seat belt warning buzzer function
- Door ajar warning buzzer function
- Seat belt indicator lamp
- Door ajar indicator lamp

POSSIBLE CAUSES

- Malfunction of the vehicles speed sensor
- Malfunction of the ETACS-ECU
- Damaged harness wires and connectors

DIAGNOSTIC PROCEDURE

Step 1. M.U.T.-III CAN bus diagnostics
Use the M.U.T.-III to diagnose the CAN bus lines.

Q: Is the check result normal?
YES : Go to Step 2.
NO : Repair the CAN bus line (Refer to GROUP 54F – Troubleshooting P.54F-13).

Step 2. Check for combination meter diagnosis code.
Check whether the combination meter-related diagnosis code is set.

Q: Is the diagnosis code set?
YES : Diagnose the combination meter (Refer to GROUP 54A – Combination meter P.54A-55).
NO : Go to Step 3.

Main Index
Group TOC

Step 3. ETACS ANALOG data by using the SWS monitor.

- Enter a simulated vehicle speed.

Item No.	Item name	Normal condition
Item 03	Vehicle speed	Displays the speed which fluctuates within ± 2 km/h from the entered vehicle speed.

OK: Normal condition is displayd.

Q: Is the check result normal?

YES : . The trouble can be an intermittent malfunction (Refer to GROUP 00 – How to Cope with Intermittent Malfunction P.00-5).

NO : . Replace the ETACS-ECU.

Main Index
Group TOC

CHECK AT ECU TERMINAL

M1549001200919

ETACS-ECU

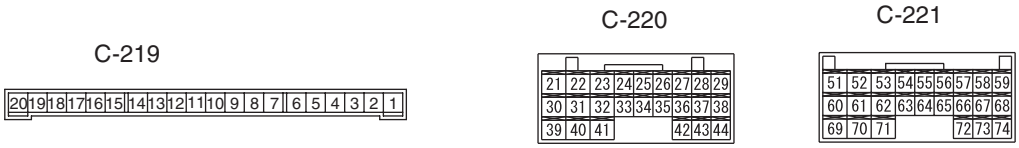

AC312902 AB

NOTE: Terminal numbers 1 to 20 can not be measured as the ETACS-ECU is mounted on the junction block directly. The values are for reference only.

Terminal No.	Check item	Check condition	Normal condition
1	Output to the power window relay	When the power windows are operative	System voltage
2	Power supply to the central door locking system (battery positive voltage)	Always	System voltage
3	Earth (for ECU)	Always	0 V
4	Ignition switch (ACC)	Ignition switch: ACC	System voltage
5	Output to room lamp	When the room lamp is on	2 V or less
6	Power supply to interior lamp (battery positive voltage)	Always (when the interior lamp off function is off)	System voltage
7	Input from left rear door switch	Left rear door switches: ON (left rear door open)	0 V
8	Power supply from ignition switch (IG1)	Ignition switch: ON	System voltage
9	Output to right turn-signal lamps	When right turn-signal lamps are on	System voltage
10	Input from driver's door switch	Driver's door switch: ON (door open)	0 V
11	Power supply to hazard warning lamp (battery positive voltage)	Always	System voltage
12	Output to central door locking (for locking the doors)	When the door lock actuators lock the doors	System voltage
13	Output to central door locking (for unlocking the doors other than the driver's door)	When the door lock actuators unlock the doors	System voltage
14	Output to left turn-signal lamps	When the left turn-signal lamps are on	System voltage
15	–	–	–
16	Output to rear wiper	When rear wiper is operating	System voltage
17	Input of rear wiper automatic stop signal	When rear wiper is operating	System voltage
18	Power supply from ignition switch (ACC)	Ignition switch: ACC	System voltage

Main Index
Group TOC

Terminal No.	Check item	Check condition	Normal condition
19	–	–	–
20	Battery power supply (for ECU)	Always	System voltage
21	–	–	–
22	Output to central door locking (for unlocking the driver's door)	When the door lock actuators unlock the doors	System voltage
23	Rear washer output	When rear washer is operating	System voltage
24	Input from remote controlled mirror switch (fold switch)	Remote controlled mirror switch (fold switch): ON	0 V
29	Input from passenger’s seat belt switch	When passenger’s seat belt switch is on	–
30	Input to key reminder switch	Key reminder switch: ON (ignition key removed)	0 V
31	Output to electric retractable remote controlled mirror (unfold)	When the door mirrors are folding	System voltage
33	Input to door key switch or tailgate key switch (lock switch)	All doors and tailgate: Locked	0 V
34	Input to door key switch or tailgate key switch (unlock switch)	All doors and tailgate: Unlocked	0 V
35	Input to driver's door lock actuator (lock switch)	Driver's door lock: Locked	0 V
36	Input to driver's door lock actuator (unlock switch)	Driver's door lock: Unlocked	0 V
37	Input from tailgate switch	Tailgate switch: ON (tailgate open)	0 V
39	Input to back-up lamp switch	Sift lever: R Ignition switch: ON	System voltage
40	Output to electric retractable remote controlled mirror (unfold)	When the door mirrors are unfolding	System voltage
51	Setting diagnosis code or sending input check signal	When diagnosis code is set (the M.U.T.-III is connected or the diagnosis connector No.1 is earthed)	0 to 12 V (pulse signal)
		When input check signal is sent	0 V, 12 V (input signal is fluctuating)
52	Input from luggage compartment lamp switch	Luggage compartment lamp switch: ON	0 V
53	Input from interior lamp off switch	Interior lamp switch: OFF	0 V
54	Input from fog lamp switch	Fog lamp switch: ON	0 V
55	Input from hazard warning lamp switch	Hazard warning lamp switch: ON	0 V
56	Earth (for sensor)	Always	0 V
57, 58	–	–	–
59	SWS communication line	Always	0 to 12 V (pulse signal)

Main Index
Group TOC

Terminal No.	Check item	Check condition	Normal condition
60	Power supply to automatic air conditioner control (A/C-ECU) illumination and radio illumination (battery positive voltage)	Always	System voltage
61	Input to tailgate lock actuator	Tailgate lock: Locked	0 V
62	Input to tailgate lock release handle	Tailgate lock release handle: ON	0 V
63	Input from interior lamp on switch	Interior lamp switch: ON	0 V
64	–	–	–
65	Input from passenger's door switch	Passenger's door switch: ON (door open)	0 V
66	Input from windshield intermittent wiper volume	Turn the ignition switch to the ACC position, and move the wiper volume from "Fast" to "Slow."	0 to 2.5 V
67	Input from diagnosis control	When M.U.T.-III is connected	0 V
68	Input of SWS request signal	Always	0 to 12 V (pulse signal)
69	Output to ignition key cylinder illumination lamp	When ignition key cylinder illumination is on	2 V or less
70	Input from right rear door switch	Right rear door switches: ON (right rear door open)	0 V
71	Power supply to interior lamp	Always (when the interior lamp off function is off)	System voltage
72 – 74	–	–	–

COLUMN SWITCH

C-301

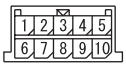

AC312903 AB

Terminal No.	Check item	Check condition	Normal condition
1	System voltage	Always	System voltage
2	Input of SWS request signal	Always	0 to 12 V (pulse signal)
3	SWS communication line	Always	0 to 12 V (pulse signal)
4	Earth	Always	0 V
5	–	–	–
6	Output to windshield intermittent wiper volume	Ignition switch: ACC Move the wiper volume from "Fast" to "Slow."	0 to 2.5 V
7	–	–	–

Main Index
Group TOC

Terminal No.	Check item	Check condition	Normal condition
8	Back-up output to windshield wiper switch	Windshield low-speed wiper switch or windshield high-speed wiper switch: ON	0 V
9	Power supply from ignition switch (IG1)	Ignition switch: ON	System voltage
10	Back-up output to headlamp switch	Headlamp switch: ON	0 V

FRONT-ECU

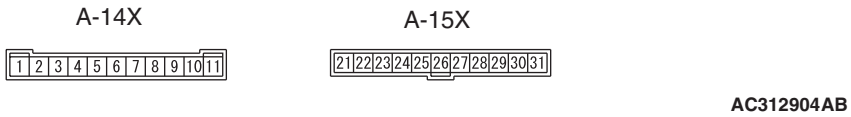

NOTE: Measurement is not possible as the front-ECU is mounted on the relay box directly. The values are for reference only.

Terminal No.	Check item	Check condition	Normal condition
1 – 2	–	–	–
3	Battery power supply (for headlamp washer)	Always	System voltage
4	Output to tail lamps	When the tail lamps are on	System voltage
5	Battery power supply (for ECU)	Always	System voltage
6	Output to low-beam headlamps	When low-beam headlamps are on	System voltage
7	Battery power supply (for tail lamps)	Always	System voltage
8, 9	Battery power supply (for headlamps)	Always	System voltage
10	Output to high-beam headlamps	When high-beam headlamps are on	System voltage
11	Output to front fog lamps	When front fog lamps are on	System voltage
21	Earth	Always	0 V
22	Power supply to the ignition switch (IG2)	Ignition switch: ON	System voltage
23	–	–	–
24	Output to windshield wiper (high speed operation)	When windshield wipers are operating at high speed	System voltage
25	Output to windshield wiper (low speed operation)	When windshield wipers are operating at low speed	System voltage
26	Back-up input from windshield wiper switch	Windshield low-speed wiper switch or windshield high-speed wiper switch: ON	0 V
27	Back-up input from headlamp switch	Headlamp switch: ON	0 V
28	Power supply from ignition switch (ACC)	Ignition switch: ACC	System voltage

Main Index
Group TOC

Terminal No.	Check item	Check condition	Normal condition
29	Input of windshield wiper automatic stop signal	When windshield wipers are operating	System voltage
30	SWS communication line	Always	0 to 12 V (pulse signal)
31	Output to windshield washer	When windshield washer is operating	System voltage

SUNROOF MOTOR ASSEMBLY

E-07

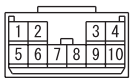

AC312932AB

Terminal No.	Check item	Check condition	Normal condition
1	System voltage (for motor)	Always	System voltage
2	Power supply from ignition switch (IG2)	Ignition switch: ON	System voltage
3, 4	–	–	–
5	Earth	Always	0 V
6	Input from sunroof switch (close)	Sunroof switch: Close	0 V
7	–	–	–
8	Input from sunroof switch (open)	Sunroof switch: Open	0 V
9	–	–	–
10	SWS communication line (to ETACS-ECU)	Always	0 to 12 V (pulse signal)

Main Index
Group TOC

ON-VEHICLE SERVICE

CUSTOMIZE FUNCTION

M1549002501239

Using M.U.T.-III adjusts the following function. The programmed information is held even when the battery is disconnected.

- Headlamp automatic-shutdown function

To prevent the headlamp from being left illuminated, the headlamp is turned off automatically when opening the driver's door, if the ignition switch is turned to the LOCK (OFF) position with the lighting switch in the TAIL or HEAD position.

- Vehicle speed-dependent wiper function

With the windshield wiper switch in the intermittent position, the intermittent duration changes depending on the intermittent adjusting knob position and the vehicle speed.

- Turn-signal lamp operation sound function

Synchronized with the hazard lamp and the turn signal lamp, the buzzer sounds.

- Dimmer interior lamp control duration

When the door is closed with the ignition switch LOCK (OFF), the interior lamp is turned OFF automatically in the specified time.

- Timer lock time after executing the keyless entry unlock

If any door including a tailgate is not opened after being unlocked with the keyless transmitter, doors are locked automatically within the specified time.

- Door-ajar warning function

Driving with any door, including a tailgate, not properly closed sounds the buzzer to let the driver know the door-ajar state.

- Rear wiper intermittent duration

When the rear wiper switch is turned ON, the rear wiper operates in the intermittent action. When the rear wiper switch is turned from OFF to ON two cycles, the rear wiper makes continuous operation regardless of the intermittent operation duration setting.

- Operation duration of interior lamp automatic-shutdown function

This function automatically turns OFF the interior lamp after a specified time has elapsed, if the interior lamp is ON with the ignition switch in the LOCK (OFF) position.

- Wiper-linked washer function

When this function is active, the windshield wiper operates if the washer switch is turned ON.

- Keyless entry system hazard answerback function

When lock/unlock is operated with the keyless entry transmitter, the hazard lamp flashes, so that the driver can recognize the lock/unlock status of the vehicle even if the driver is away from it.

- initialising all functions (Returning to the initial condition)

All adjusting functions are returned to the settings at the time of factory shipment.

ADJUSTMENT POSSIBILITY CHART FOR INDIVIDUAL MARKET

Item No.	Item	For General Export and GCC	For Australia and New Zealand
2	Headlamp automatic-shutdown function	×	
4	Vehicle speed-dependent wiper function	×	×
15	Turn-signal lamp operation sound function	×	×
16	The delay-off time of the room lamp	×	×
24	Timer lock time after executing the keyless entry unlock	×	×
26	Door-ajar warning function	×	×
28	Rear wiper intermittent duration	×	×
30	Operation duration of interior lamp automatic-shutdown function	×	×
37	Wiper-linked washer function	×	×
39	Turn signal lamp operation condition adjustment function	×	×
40	Flashing pattern adjustment function of keyless entry system hazard answer-back	×	×

Main Index
Group TOC

Item No.	Items shown on M.U.T.-III screen	Item	Adjustment items shown on M.U.T.-III screen	Adjusting contents
2	Headlamp auto-cut	Headlamp automatic-shutdown function	Spec.A(Old)	With function: The automatic tail lamp turn-off function with the ignition switch OFF (LOCK) is available.
			Spec.D(DOM)	With function: The automatic tail lamp turn-off function with the ignition switch OFF (LOCK) is not available. (Initial setting)
			Without function	Without function
4	Wiper speed-sensitive operation	Vehicle speed-dependent wiper function	With function	With function (Initial setting)
			Without function	Without function
15	Turn-signal buzzer	Turn-signal lamp operation sound function	With function	With function
			Without function	Without function (the initial condition)
16	Room lamp delay timer	Dimmer interior lamp control duration	30sec.	30 seconds
			15sec.	15 seconds (the initial condition)
			7.5sec.	7.5 seconds
			Without function	0 second (no delay action)
24	Timer relock after unlocking	Timer lock time after executing the keyless entry unlock	30sec.	30 seconds (the initial condition)
			60sec.	1 minute
			120sec.	2 minutes
			180sec.	3 minutes
26	Door ajar buzzer	Door-ajar warning function	With function	With function (Initial setting)
			Without function	Without function
			Sequential ope.	Continuous operation
28	Rear wiper intermittent time	Rear wiper intermittent duration	8sec.	8 seconds: Without continuous operation (Initial setting)
			4s(Sequential)	4 seconds: With continuous operation
			8s(Sequential)	8 seconds: With continuous operation
			16s(Sequential)	16 seconds: With continuous operation
			Sequential ope.	Continuous operation (without the intermittence)
			4sec.	4 seconds: Without continuous operation
			16sec.	16 seconds: Without continuous operation

Main Index
Group TOC

Item No.	Items shown on M.U.T.-III screen	Item	Adjustment items shown on M.U.T.-III screen	Adjusting contents
30	Room lamp auto-cut	Operation duration of interior lamp automatic-shutdo wn function	3min.	3 minutes
			30min.	30 minutes (the initial condition)
			60min.	60 minutes
			Without function	Without function
37	Wiper synchronized washer	Wiper linked with washer function	With function	With function (Initial setting)
			Without function	Without function
39	Turn-signal operation	Turn signal lamp operation condition adjustment function	When IG ON	Turn signal lamp can be operated when the ignition switch is turned ON (Initial setting).
			When IG ACC	Turn signal lamp can be operated when the ignition switch 1 is in ACC or ON position.
40	Hazard answer-back operation	Keyless entry hazard answer-back flashing pattern adjustment function	LOCK:1/UNLOCK:2	LOCK: Flash once, UNLOCK: Flash twice (Initial setting)
			LOCK:1/UNLOCK:0	LOCK: Flash once, UNLOCK: No flash
			LOCK:0/UNLOCK:2	LOCK: No flash, UNLOCK: Flash twice
			LOCK:2/UNLOCK:1	LOCK: Flash twice, UNLOCK: Flash once
			LOCK:2/UNLOCK:0	LOCK: Flash twice, UNLOCK: No flash
			LOCK:0/UNLOCK:1	LOCK: No flash, UNLOCK: Flash once
			Without function	No flashing

NOTE: Adjustment items other than the above will also be shown on M.U.T.-III screen. However, they cannot be reconfigured.