GROUP 54E

# SMART WIRING SYSTEM (SWS) USING SWS MONITOR <Vehicles for Hong Kong and Singapore>

## CONTENTS

**GENERAL INFORMATION** . . . . . **54E-3**

**SPECIAL TOOLS**. . . . . **54E-3**

**TROUBLESHOOTING** . . . . . **54E-5**

PRIOR TO TROUBLESHOOTING . . . . . 54E-5

STANDARD FLOW OF DIAGNOSTIC TROUBLESHOOTING . . . . . 54E-5

HOW TO CONNECT THE SWS MONITOR . . . . . 54E-6

ECU CHECK. . . . . 54E-10

DATA LIST CHECK . . . . . 54E-10

PULSE CHECK. . . . . 54E-24

M.U.T.-III DRIVE RECORDER FUNCTION . . . . . 54E-25

**DIAGNOSIS CODE CHART** . . . . . **54E-25**

**DIAGNOSTIC TROUBLE CODE PROCEDURES** . . . . . **54E-26**

**TROUBLE SYMPTOM CHART** . . . . . **54E-40**

**CHECK TROUBLE BY USING THE INPUT SIGNAL CHECK** . . . . . **54E-45**

**OPERATION AND FUNCTION QUICK-REFERENCE TABLE FOR INPUT SIGNAL INSPECTION PROCEDURES** . . . . . **54E-47**

**Continued on next page**

Main Index
Group TOC

**SYMPTOM PROCEDURES . . . . . 54E-48**
BUZZER . . . . . 54E-76
CENTRAL DOOR LOCKING SYSTEM. . . . 54E-84
POWER WINDOW . . . . . 54E-99
KEYLESS ENTRY SYSTEM. . . . . 54E-132
SUNROOF . . . . . 54E-139
WINDSHIELD WIPER AND WASHER . . . . 54E-147
REAR WIPER AND WASHER . . . . . 54E-165
ELECTRIC RETRACTABLE REMOTE CONTROLLED DOOR MIRROR . . . . . 54E-177
IGNITION KEY CYLINDER ILLUMINATION LAMP . . . . . 54E-190
HEADLAMP AND TAIL LAMP . . . . . 54E-193
FLASHER TIMER . . . . . 54E-223
FOG LAMP . . . . . 54E-241
INTERIOR LAMP. . . . . 54E-248
SECURITY ALARM . . . . . 54E-278
SEAT BELT REMAINDER FUNCTION . . . . 54E-290

**INPUT SIGNAL PROCEDURES. . . . . 54E-291**

**CHECK AT ECU TERMINAL . . . . . 54E-346**

**ON-VEHICLE SERVICE . . . . . 54E-353**
CUSTOMISE FUNCTION . . . . . 54E-353

Main Index
Group TOC

# GENERAL INFORMATION

M1549000100629

For the general information regarding the SWS, refer to GROUP 54D – General Information P.54D-3.

# SPECIAL TOOLS

M1549000301336

| Tool | Number | Name | Use |
|---|---|---|---|
| a 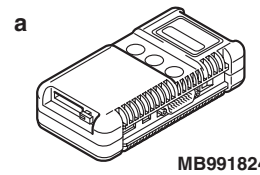 MB991824<br>b 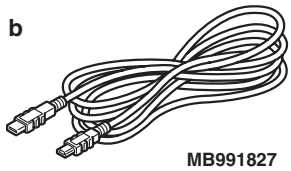 MB991827<br>c 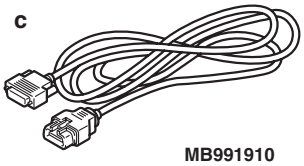 MB991910<br>d 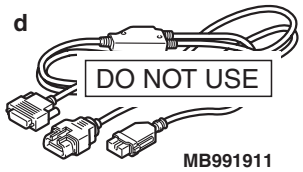  MB991911<br>e 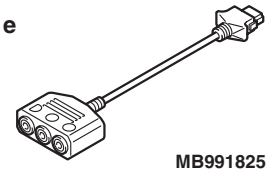 MB991825<br>f 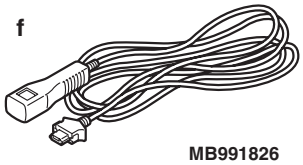 MB991826<br>MB991955 | MB991955<br>a. MB991824<br>b. MB991827<br>c. MB991910<br>d. MB991911<br>e. MB991825<br>f. MB991826 | M.U.T.-III sub-assembly<br>a. Vehicle Communication Interface (V.C.I.)<br>b. M.U.T.-III USB cable<br>c. M.U.T.-III main harness A (Vehicles with CAN communication system)<br>d. M.U.T.-III main harness B (Vehicles without CAN communication system)<br>e. M.U.T.-III measure adapter<br>f. M.U.T.-III trigger harness | SWS communication line check (ECU check and service data)<br>**⚠ CAUTION**<br>**M.U.T.-III main harness B (MB991911) should be used. M.U.T.-III main harness A should not be used for this vehicle.** |
| 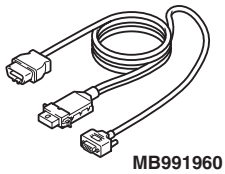 MB991960 | MB991960 | Intermediate wiring harness for SWS customisation | SWS communication line check (ECU check, service data) |

Main Index
Group TOC

| Tool | Number | Name | Use |
|---|---|---|---|
| 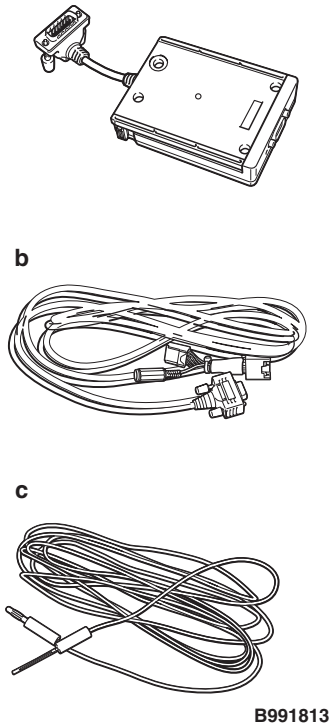 | MB991813<br>a. MB991806<br>b. MB991812<br>c. MB991822 | SWS monitor kit<br>a. SWS monitor cartridge<br>b. SWS monitor harness (for column-ECU)<br>c. Probe harness | SWS communication line check (ECU check and service data) |
| 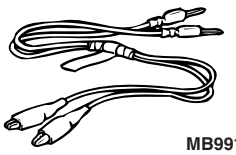 | MB991529 | Diagnosis code check harness | Input signal check by using a voltmeter |
| 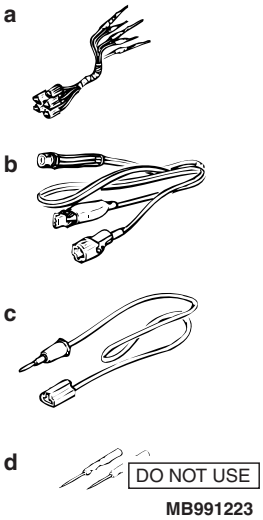 | MB991223<br>a. MB991219<br>b. MB991220<br>c. MB991221<br>d. MB991222 | Harness set<br>a. Check harness<br>b. LED harness<br>c. LED harness adapter<br>d. Probe | Continuity check and voltage measurement at harness wire or connector<br>a. For checking connector pin contact pressure<br>b. For checking power supply circuit<br>c. For checking power supply circuit<br>d. For connecting a locally sourced tester |
| 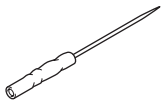 | MB992006 | Extra fine probe | Continuity check and voltage measurement at harness wire or connector |

Main Index
Group TOC

| Tool | Number | Name | Use |
|---|---|---|---|
| 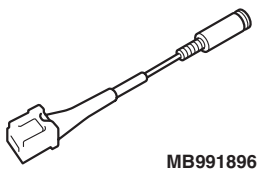 MB991896 | MB991896 | Adapter harness for door communication | Door communication line check (service data) |

# TROUBLESHOOTING

## PRIOR TO TROUBLESHOOTING

M1549014700561

Before carrying out troubleshooting, check the following two items.

- Make sure that the ETACS-ECU, the junction block (J/B), the front-ECU and the engine compartment relay box are connected securely.
- Check that the system fuses and fusible links are not burned out.

## STANDARD FLOW OF DIAGNOSTIC TROUBLESHOOTING

M1549000500757

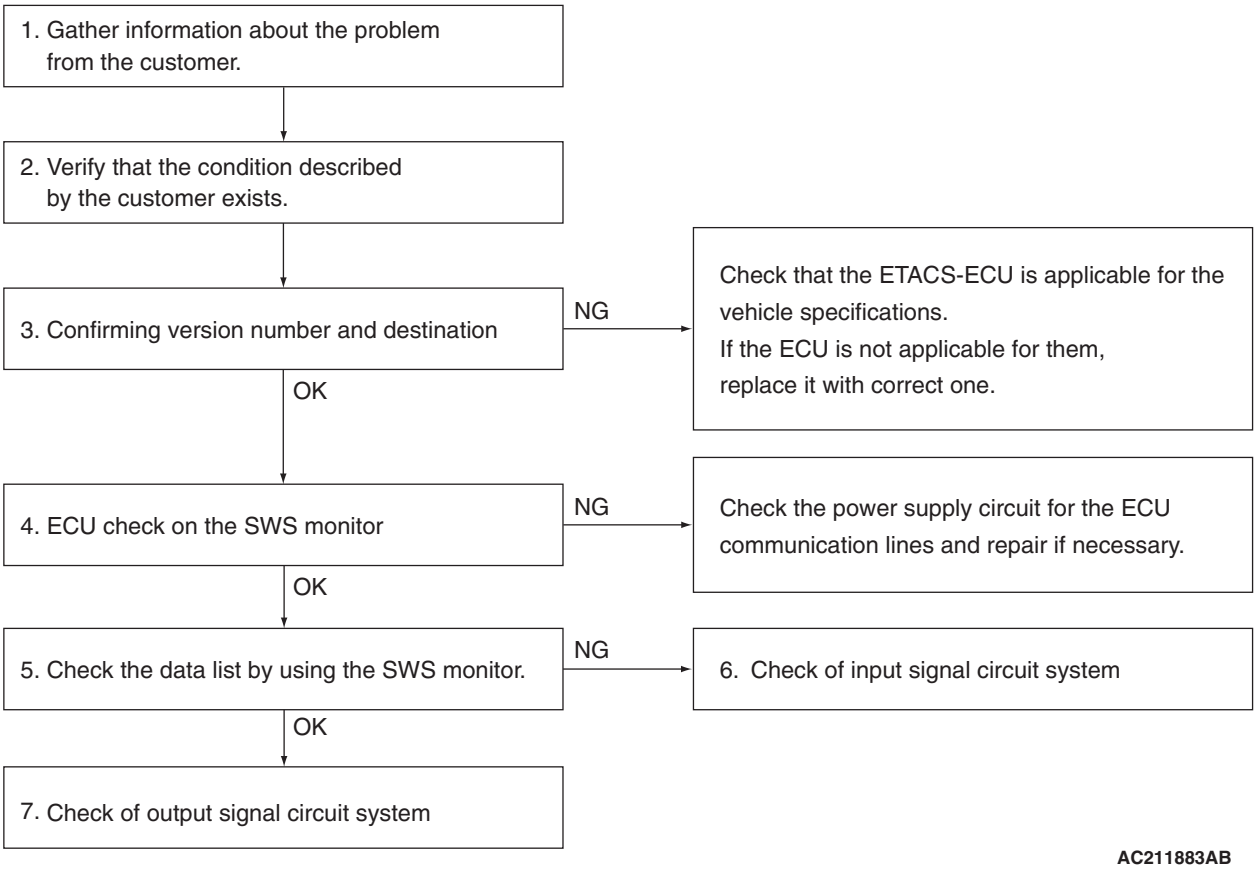


AC211883AB

1. Gather information about the problem from the customer.
2. Verify that the condition described by the customer exists.

*NOTE: If an error occurs in the SWS communication line, the ECU isolated from the communication line performs a fail-safe or backup operation, so the problem may not match the one shown in the Trouble Symptom Chart. However, the cause of the failure can be tracked down by performing the following troubleshooting with the SWS monitor.*

Main Index
Group TOC

3. Confirming version number and destination

   Check whether the SWS version number (0) and destination (EU W/O DRL) meet the vehicle specifications. If they are different, replace the ETACS-ECU with a correct one.

4. ECU check by using the SWS monitor

   Check whether the communication status of the input- or output-signal-side ECU associated with the defective function is normal.

- If "OK " is displayed for all related ECUs, they communicate with each other normally and the input or output signal circuit system may be defective. Therefore, check SWS monitor service data.
- If "NG" is displayed for any of the related ECUs, something may be wrong with the ECU for which "NG" appears, its power supply or earthing system, or a wiring harness or connector between the SWS monitor and the ECU. Check the wiring harness and connectors associated with the ECU and examine the ECU itself.

5. SWS monitor data list

   Select the defective function from the function-specific diagnostic menu, and check the service data that appears for each function item. This allows you to check whether the transmission data is normal or not. You can judge which circuit is the cause of the trouble, input circuit or output circuit.

   *NOTE: In addition to the function-specific diagnostic menu, a service data menu is available for SWS monitor service data to check all items for each ECU.*

- The switch condition does not meet the service data display: Input signal system related to defective functions
- The switch condition meets the service data display: Output signal system related to defective functions

6. Check of input signal circuit system

   Check relevant switch, sensor, input signal-side ECU and their wiring harness and connector.

7. Check of output signal circuit system

   Check an output signal-side ECU, electrical load components and their wiring harness and connector.

## HOW TO CONNECT THE SWS MONITOR

M1549014800580

**⚠ CAUTION**

**Always turn the ignition switch to the "LOCK" (OFF) position before connecting or disconnecting the SWS monitor and the M.U.T.-III.**

## HOW TO CONNECT THE SWS COMMUNICATION LINE <SPECIAL TOOL SWS MONITOR HARNESS (FOR COLUMN-ECU) MB991812>

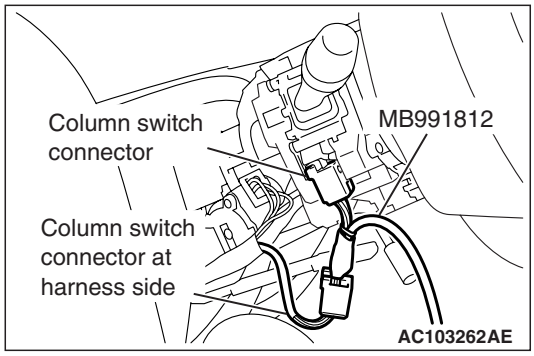


1. Remove the steering column cover.
2. Remove the steering column switch connector.
3. Connect special tool SWS monitor harness (for column-ECU) MB991812.

Main Index
Group TOC

## <WHEN CONNECTING THE DIAGNOSIS CONNECTOR BY USING THE INTERMEDIATE WIRES FOR SWS MONITOR CUSTOMISATION>

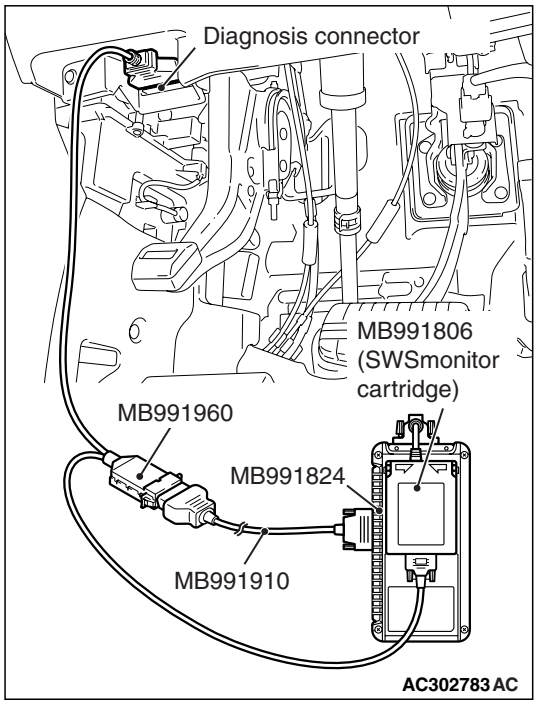


1. Connect the special tool Intermediate wires (MB991960) for SWS monitor customisation to the special tool M.U.T.-III main harness A (MB991910).
2. Connect the M.U.T.-III main harness A (with the intermediate wires) to the special tool V.C.I. (MB991824) .
3. Connect the intermediate wires for SWS monitor customisation to the the diagnosis connector and the SWS monitor cartridge.

## HOW TO ESTABLISH COMMUNICATION BETWEEN DOORS

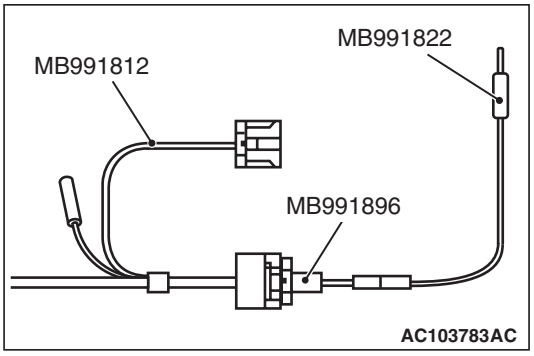


1. Connect special tool SWS monitor harness (for column-ECU) MB991812 to special tool adapter harness for door communication MB991896.
2. Connect special tool Probe harness MB991822 to special tool adapter harness for door communication MB991896 assembled in step 1.
3. Confirm that all the harnesses are connected. Then insert the probe of special probe harness MB991822 to each female connector terminal on special tool adapter harness for door communication MB991896 by backprobing.

   *NOTE: For the connectors and their terminal numbers on the door communication line for the probe to insert, refer to the reference table.*

Main Index
Group TOC

## Reference table of connectors and their terminal numbers on door communication line

Insert the probe of the probe harness to each female connector terminal on the door communication line by backprobing.

| Connector name | | Connector number | Terminal No. |
|---|---|---|---|
| Intermediate connector | Instrument panel wiring harness and front door wiring harness (RH) combination | C-14 [Front door wiring harness (RH) side] | 3 |
| | Instrument panel wiring harness and floor wiring harness combination | C-16 (Instrument panel wiring harness side) | 29 |
| | Instrument panel wiring harness and front door wiring harness (LH) combination | C-27 [Front door wiring harness (LH) side] | 5 |
| | Floor wiring harness and rear door wiring harness (RH) combination | D-03 [Floor wiring harness side] | 8 |
| | Floor wiring harness and rear door wiring harness (LH) combination | D-16 [Floor wiring harness side] | 8 |
| Power window main switch | | E-05 | 11 |
| Power window sub switch (front, LH) | | E-26 | 6 |
| Power window sub switch (rear RH) | | E-18 | 6 |
| Power window sub switch (rear LH) | | E-02 | 6 |

Main Index
Group TOC

**Connectors: C-14, C-16**

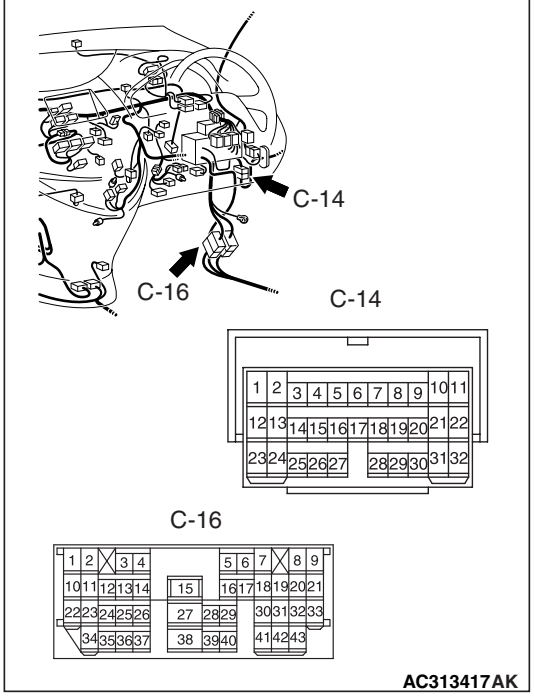


**Connector: C-27**

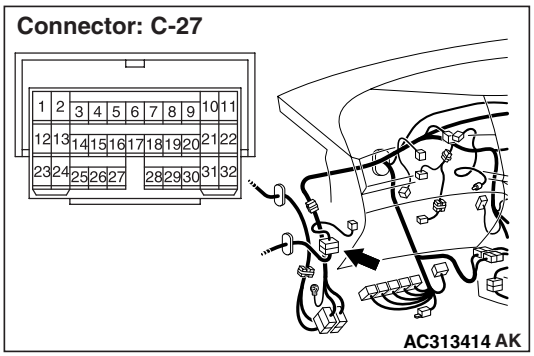


**Connectors: D-03, D-16**

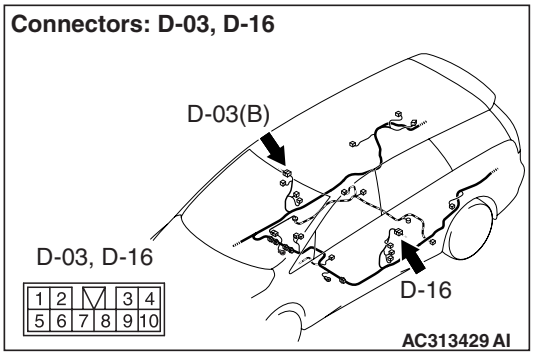


**Connector: F-02**

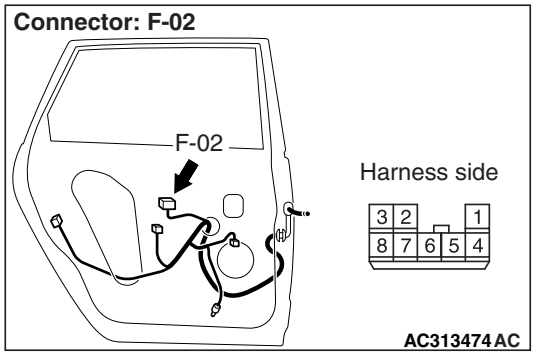


**Connector: F-05**

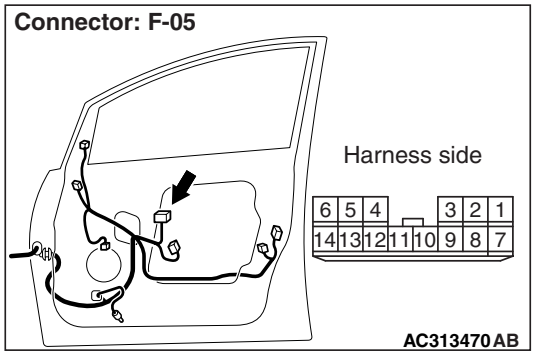


**Connector: F-18**

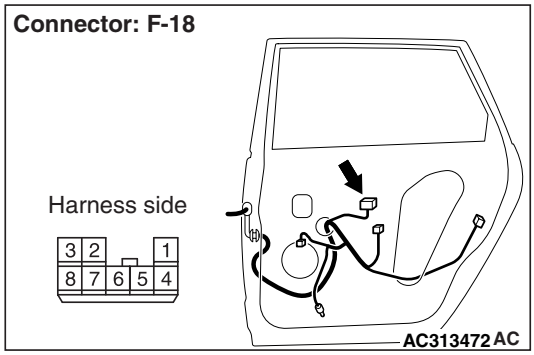


**Connector: F-26**

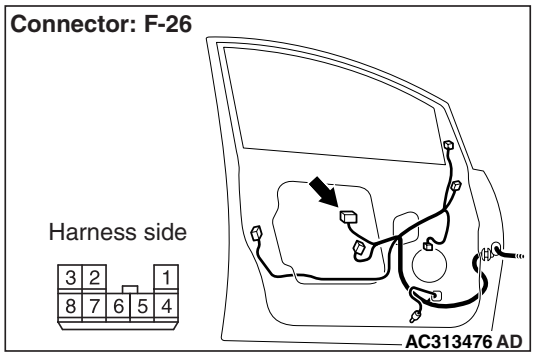

Main Index
Group TOC

## ECU CHECK

M1549014900521

1. Use the M.U.T.-III and the SWS monitor to check ECUs (Refer to M.U.T.-III User's Manual).
2. The following ECUs can be checked by using the M.U.T.-III and the SWS monitor.

*NOTE: If a malfunction is found by the "ECU CHECK", proceed "Symptom Procedure" (Refer to P.54E-40).*

## SWS MONITOR-COMPATIBLE ECUS AND THEIR CONDITIONS

| Item No. | ECUs to be checked | Display on M.U.T.-III | Normal condition | ECU conditions |
|---|---|---|---|---|
| 80 | Column switch (column-ECU) | COLUMN ECU | OK*1 | All of the column switch, power supply, earth and interconnecting communication line are normal |
| 83 | ETACS-ECU | ETACS ECU | OK | All of the ETACS-ECU switch, power supply, earth and interconnecting communication line are normal |
| 84 | Front-ECU | FRONT ECU | OK*2 | All of the front-ECU, power supply, earth and interconnecting communication line are normal |
| 85 | Power window main switch (power window module) | P/W MODULE | OK*2 (when the ignition switch is ON) | All of the power window main switch, power supply, earth and interconnecting communication line are normal |
| – | Other SWS-related ECUs | Other ECUs | NG | ECUs are not used |

*NOTE:*

- **1: If "NG" is displayed beside the ETACS-ECU while the ignition switch is off, "NG" is also displayed beside the column-ECU.*
- **2: If "NG" is displayed beside the ETACS-ECU, "NG" is also displayed beside the front-ECU and the power window main switch (power window module).*

## DATA LIST CHECK

M1549015000907

1. Use the M.U.T.-III and the SWS monitor to check "DATA LIST." This "DATA LIST" check is applicable for signals, which are transmitted and received through the SWS communication line and the communication lines routed from one door to another. For the input signals which are not applicable for the SWS monitor check, refer to pulse check procedure P.54E-45.

*NOTE: If a problem is found in the "DATA LIST" check, refer to the Problems during Input Signal Check <Service data, function diagnosis or pulse check> (Refer to P.54E-45).*

2. The following input signals can be checked by using the M.U.T.-III and the SWS monitor.

Main Index
Group TOC

## DATA LIST REFERENCE TABLE
## COLUMN SWITCH (COLUMN-ECU)

| Item No. | Check item | Display on M.U.T.-III | Check condition | Normal condition |
|---|---|---|---|---|
| 00 | Headlamp switch | HEADLAMP SW | lighting switch: HEAD | ON |
| | | | lighting switch: Other than HEAD | OFF |
| 01 | Tail lamp switch | TAIL LAMP SW | Lighting switch: TAIL | ON |
| | | | Lighting itch: OFF | OFF |
| 02 | Dimmer switch | DIMMER SW | Dimmer switch: ON | ON |
| | | | Dimmer switch: OFF | OFF |
| 03 | Passing lamp switch | PASSING SW | Passing lamp which: ON | ON |
| | | | Passing lamp which: OFF | OFF |
| 05 | Windshield intermittent wiper switch | INT WIPER SW | Wiper switch: INT | ON |
| | | | Wiper switch: Other than INT | OFF |
| 06 | Windshield low-speed wiper switch | LO WIPER SW | Wiper switch: LO | ON |
| | | | Wiper switch: Other than LO | OFF |
| 07 | Windshield high-speed wiper switch | HI WIPER SW | Wiper switch: HI | ON |
| | | | Wiper switch: Other than HI | OFF |
| 08 | Wind shield mist wiper switch | MIST WIPER SW | Wiper switch: Mist | ON |
| | | | Wiper switch: Other than mist | OFF |
| 09 | Windshield washer switch | FRONT WASH. SW | Windshield washer switch: ON | ON |
| | | | Windshield washer switch: OFF | OFF |
| 10 | Turn-signal lamp switch (RH) | TURN SIG. RH | Turn-signal lamp switch: RH | ON |
| | | | Turn-signal lamp switch: Other than RH | OFF |
| 11 | Turn-signal lamp switch (LH) | TURN SIG. LH | Turn-signal lamp switch: LH | ON |
| | | | Turn-signal lamp switch: Other than LH | OFF |
| 13 | Rear wiper switch | REAR WIPER SW | Rear wiper switch: INT | ON |
| | | | Rear wiper switch: Other than INT | OFF |
| 14 | Rear washer switch | REAR WASH. SW | Rear wiper switch: Washer | ON |
| | | | Rear wiper switch: Other than washer | OFF |
| 15 | With or without windshield intermittent wiper control | INT WIP KNOB | Vehicles with intermittent wiper control | EQUIP |
| | | | Vehicles without intermittent wiper control | NONE |

Main Index
Group TOC

## ETACS-ECU

| Item No. | Check item | Display on M.U.T.-III | Check condition | Normal condition |
|---|---|---|---|---|
| 30 | Ignition switch (IG1) | IG SW(IG1) | Ignition switch: ON or START | ON |
| | | | Ignition switch: LOCK (OFF) or ACC | OFF |
| 31 | Ignition switch (ACC) | IG SW(ACC) | Ignition switch: ACC or ON | ON |
| | | | Ignition switch: LOCK (OFF) or START | OFF |
| 32 | Driver's door switch | DR DOOR SW | Driver's door switch ON (The driver's door is open). | ON |
| | | | Driver's door switch OFF (The driver's door is closed). | OFF |
| 33 | Reception of power window switch | P/W SW ACCEPT | Ignition switch: ON or START | PERMIT |
| | | | Ignition switch: from ON or START to LOCK (OFF) or ACC | from PERMIT to PROHIBIT (after approximately 30 seconds) |
| 34 | Multimode keyless entry system | KEYLESS ENTRY | 1. Keyless entry transmitter LOCK switch: ON<br>2. Turn ON the keyless entry transmitter LOCK switch again (For the second switch operation, hold pressing the switch for at least one second within 30 seconds after the switch is turned on at first) | Multi-close (only momentarily when switch is operated) |
| | | | Other than the conditions above | WAITING |
| 35 | Headlamp automatic-shutdown function | HD AUTO-CUT | 1. Lighting switch: Other than OFF<br>2. Ignition switch: from ON or START to LOCK (OFF) or ACC<br>3. Driver's door switch: ON (driver's door open) | OFF to ON (after approximately one second) |
| | | | When requirements for the headlamp automatic-shutdown are not satisfied | OFF |
| 36 | Request of front fog lamp illumination | F.FOG LAMP | 1. Lighting switch: "TAIL" or "HEAD"<br>2. Front fog lamp switch: ON | ON |
| | | | Other than the conditions above | OFF |
| 37 | Windshield intermittent wiper interval | INT WIPE TIME | 1. Ignition switch: ACC or ON<br>2. Operate the intermittent wiper control, and change the wiper interval | The M.U.T.-III displays intermittent wiper interval in response to the intermittent wiper control positions |
| 42 | Wiper activation command | WIPER ON COM | Set | YES |
| | | | Not set | NO |

Main Index
Group TOC

| Item No. | Check item | Display on M.U.T.-III | Check condition | Normal condition |
|---|---|---|---|---|
| 43 | Buzzer | BUZZER | 1. Ignition switch: LOCK (OFF) position<br>2. Tail lamp or headlamp switch: ON<br>3. Driver's door switch: ON (driver's door open) | ON |
| | | | When requirements for sounding each warning buzzer are not satisfied | OFF |
| 52 | Support for rear sunroof lock | REAR S/R LOCK | Action | SUPPORT |
| | | | Not supported | NON SUPPORT |
| 54 | Intermittent wiper operation period | INT TIME SPEC | Maximum 32 seconds | MAX.32s Spec |
| | | | Maximum 19 seconds | MAX.19s Spec |
| 56 | Washer-linked wiper | WIP-LINK WASH | Set | EQUIP |
| | | | Not set | NONE |

*NOTE: For item number 43 "BUZZER", the M.U.T.-III also displays "ON" when the lamp reminder buzzer is triggered.*

## FRONT-ECU

| Item No. | Check item | Display on M.U.T.-III | Check condition | Normal condition |
|---|---|---|---|---|
| 70 | Response by the front-ECU | FRONT ECU ACK | lighting switch: Other than OFF (excluding when high-beam is on) or the wiper switch is at position other than OFF | NORMAL ACK |
| | | | • Ignition switch: ON or START<br>• Lighting switch: OFF | SLEEP ACK |
| | | | • Lighting switch: HEAD<br>• Headlamps: at high beam | HI BEAM ACK |
| | | | – | NO ACK |

*NOTE: For item number 70, the M.U.T.-III also displays "NG" under the "ECU Check" when it displays "No response" under the front-ECU check.*

## POWER WINDOW MAIN SWITCH (POWER WINDOW MODULE)

| Item No. | Check item | Display on M.U.T.-III | Check condition | Normal condition |
|---|---|---|---|---|
| 71 | Response from power window module | P/W ECU ACK | Ignition switch: ON or START | NORMAL ACK |
| | | | 1. Ignition switch: ON or START<br>2. Operate any switch of the power window main switch. | INPUT CHECK (only momentarily when switch is operated) |
| | | | – | NO ACK |

*NOTE: For item number 71, the M.U.T.-III also displays "NG" under the "ECU CHECK" when it displays "NO ACK" under the "P/W ECU ACK" check.*

Main Index
Group TOC

## Sunroof motor assembly (sunroof-ECU)

| Item No. | Check item | Display on M.U.T.-III | Check condition | Normal condition |
|---|---|---|---|---|
| 72 | Response by the sunroof-ECU | S/R ECU ACK | 1. Ignition switch: from ON to OFF<br>2. While sunroof is off | NORMAL ACK to SLEEP ACK (after approximately 30 seconds) |
| | | | 1. Ignition switch: ON or START<br>2. Sunroof switch: Any button of the switch is on | INPUT CHECK to NORMAL ACK |
| | | | – | NO ACK |

*NOTE: For item number 72 "S/R ECU ACK", the M.U.T.-III also displays "NG" under the "ECU Check" when it displays "NO ACK" under the "S/R ECU ACK" check.*

## COMMUNICATION BETWEEN DOORS

| Item No. | Check item | Display on M.U.T.-III | Check condition | Normal condition |
|---|---|---|---|---|
| C0 | Front passenger's power window UP switch | Pass door UP SW | Front passenger's power window switch: UP | ON |
| | | | Front passenger's power window switch: Other than "UP" | OFF |
| C1 | Front passenger's power window DOWN switch | Pas door DOWN SW | Front passenger's power window switch: DOWN | ON |
| | | | Front passenger's power window switch: Other than "DOWN" | OFF |
| C2 | Front passenger's power window AUTO switch | Pas door AUTO SW | Front passenger's power window switch: AUTO | ON |
| | | | Front passenger's power window switch: Other than "AUTO" | OFF |
| C4 | Rear right power window UP switch | Rear RH UP SW | Rear right power window switch: UP | ON |
| | | | Rear right power window switch: Other than "UP" | OFF |
| C5 | Rear right power window DOWN switch | Rear RH DOWN SW | Rear right power window switch: DOWN | ON |
| | | | Rear right power window switch: Other than "DOWN" | OFF |
| C6 | Rear right power window AUTO switch | Rear RH AUTO SW | Rear right power window switch: AUTO | ON |
| | | | Rear right power window switch: Other than "AUTO" | OFF |

Main Index
Group TOC

| Item No. | Check item | Display on M.U.T.-III | Check condition | Normal condition |
|---|---|---|---|---|
| C8 | Rear left power window UP switch | Rear LH UP SW | Rear left power window switch: UP | ON |
| | | | Rear left power window switch: Other than "UP" | OFF |
| C9 | Rear left power window DOWN switch | Rear LH DOWN SW | Rear left power window switch: DOWN | ON |
| | | | Rear left power window switch: Other than "DOWN" | OFF |
| CA | Rear left power window AUTO switch | Rear LH AUTO SW | Rear left power window switch: AUTO | ON |
| | | | Rear left power window switch: Other than "AUTO" | OFF |
| CB | Power window lock switch | P/W LOCK SW | Power window lock switch: ON | ON |
| | | | Power window lock switch: OFF | OFF |
| CD | Multi-stop | MLT-MODE STOP | 1. When multimode is working<br>2. Either function of keyless entry transmitter: ON | ON (only momentarily when switch is operated) |
| | | | Other than the conditions above | OFF |
| CE | Reception of power window switch | P/W SW Recept | Ignition switch: ON or START | PERMIT |
| | | | Ignition switch: from ON or START to LOCK (OFF) or ACC | from PERMIT to PROHIBIT (after approximately 30 seconds) |
| CF | Ignition switch (IG1) | IG1 | Ignition switch: ON or START | ON |
| | | | Ignition switch: LOCK (OFF) or ACC | OFF |

*NOTE: Service data of door communication will be sent from the power window main switch to the door communication line. Therefore, the display will remain "OFF" unless the probe is inserted.*

Main Index
Group TOC

## FUNCTION DIAGNOSIS

The table below shows the service data and their normal condition, which are displayed during the "FUNCTION DIAG." The row "Normal condition" shows values, which are shown when each operation is made.

## WIPER

| Item | Input signal | Item No. | Display on M.U.T.-III | Normal condition |
|---|---|---|---|---|
| F.WIPER INT (intermittent) | Windshield intermittent wiper switch | 05 | INT WIPER SW | ON |
| | Windshield low-speed wiper switch | 06 | LO WIPER SW | OFF |
| | Windshield high-speed wiper switch | 07 | HI WIPER SW | OFF |
| | Wind shield mist wiper switch | 08 | MIST WIPER SW | OFF |
| | Windshield washer switch | 09 | FRONT WASH. SW | OFF |
| | Ignition switch (ACC) | 31 | IG SW(ACC) | ON |
| | Windshield intermittent wiper interval | 37 | INT WIPE TIME | The M.U.T.-III displays intermittent wiper interval in response to the intermittent wiper control positions |
| | Response by the front-ECU | 70 | FRONT ECU ACK | NORMAL ACK or HI-BEAM ACK |
| F.WIPER LO (low speed) | Windshield intermittent wiper switch | 05 | INT WIPER SW | OFF |
| | Windshield low-speed wiper switch | 06 | LO WIPER SW | ON |
| | Windshield high-speed wiper switch | 07 | HI WIPER SW | OFF |
| | Wind shield mist wiper switch | 08 | MIST WIPER SW | OFF |
| | Windshield washer switch | 09 | FRONT WASH. SW | OFF |
| | Ignition switch (ACC) | 31 | IG SW(ACC) | ON |
| | Response by the front-ECU | 70 | FRONT ECU ACK | NORMAL ACK or HI-BEAM ACK |

Main Index
Group TOC

| Item | Input signal | Item No. | Display on M.U.T.-III | Normal condition |
|---|---|---|---|---|
| F.WIPER HI (high speed) | Windshield intermittent wiper switch | 05 | INT WIPER SW | OFF |
| | Windshield low-speed wiper switch | 06 | LO WIPER SW | OFF |
| | Windshield high-speed wiper switch | 07 | HI WIPER SW | ON |
| | Wind shield mist wiper switch | 08 | MIST WIPER SW | OFF |
| | Windshield washer switch | 09 | FRONT WASH. SW | OFF |
| | Ignition switch (ACC) | 31 | IG SW(ACC) | ON |
| | Response by the front-ECU | 70 | FRONT ECU ACK | NORMAL ACK or HI-BEAM ACK |
| F.WIPER MIST | Windshield intermittent wiper switch | 05 | INT WIPER SW | OFF |
| | Windshield low-speed wiper switch | 06 | LO WIPER SW | OFF |
| | Windshield high-speed wiper switch | 07 | HI WIPER SW | OFF |
| | Wind shield mist wiper switch | 08 | MIST WIPER SW | ON |
| | Windshield washer switch | 09 | FRONT WASH. SW | OFF |
| | Ignition switch (ACC) | 31 | IG SW(ACC) | ON |
| | Response by the front-ECU | 70 | FRONT ECU ACK | NORMAL ACK or HI-BEAM ACK |
| F.WIPER WASH | Wind shield mist wiper switch | 08 | MIST WIPER SW | OFF |
| | Windshield washer switch | 09 | FRONT WASH. SW | ON |
| | Ignition switch (ACC) | 31 | IG SW(ACC) | ON |
| | Response by the front-ECU | 70 | FRONT ECU ACK | NORMAL ACK or HI-BEAM ACK |

Main Index
Group TOC

## REAR WIPER

| Item | Input signal | Item No. | Display on M.U.T.-III | Normal condition |
|---|---|---|---|---|
| REAR WIPER | Rear wiper switch | 13 | REAR WIPER SW | ON |
| | Rear washer switch | 14 | REAR WASH. SW | OFF |
| | Ignition switch (ACC) | 31 | IG SW(ACC) | ON |
| REV. INTERLOCK | Rear wiper switch | 13 | REAR WIPER SW | ON |
| | Ignition switch (ACC) | 31 | IG SW(ACC) | ON |
| REAR WASHER | Rear washer switch | 14 | REAR WASH. SW | ON |
| | Ignition switch (ACC) | 31 | IG SW(ACC) | ON |

Main Index
Group TOC

## LIGHTING

| Item | Input signal | Item No. | Display on M.U.T.-III | Normal condition |
|---|---|---|---|---|
| OFF | Headlamp switch | 00 | HEADLAMP SW | OFF |
| | Tail lamp switch | 01 | TAIL LAMP SW | OFF |
| | Passing lamp switch | 03 | PASSING SW | OFF |
| | Ignition switch (IG1) | 30 | IG SW(IG1) | ON |
| | Headlamp automatic-shutdown function | 35 | HD AUTO-CUT | OFF |
| | Response by the front-ECU | 70 | FRONT ECU ACK | NORMAL ACK or HI-BEAM ACK |
| TAIL LAMP | Headlamp switch | 00 | HEADLAMP SW | OFF |
| | Tail lamp switch | 01 | TAIL LAMP SW | ON |
| | Passing lamp switch | 03 | PASSING SW | OFF |
| | Ignition switch (IG1) | 30 | IG SW(IG1) | ON |
| | Headlamp automatic-shutdown function | 35 | HD AUTO-CUT | OFF |
| | Response by the front-ECU | 70 | FRONT ECU ACK | NORMAL ACK |
| HEADLAMP LO (low-beam) | Headlamp switch | 00 | HEADLAMP SW | ON |
| | Passing lamp switch | 03 | PASSING SW | OFF |
| | Ignition switch (IG1) | 30 | IG SW(IG1) | ON |
| | Headlamp automatic-shutdown function | 35 | HD AUTO-CUT | OFF |
| | Response by the front-ECU | 70 | FRONT ECU ACK | NORMAL ACK |
| HEADLAMP HI (high-beam) | Headlamp switch | 00 | HEADLAMP SW | ON |
| | Dimmer switch | 02 | DIMMER SW | ON |
| | Ignition switch (IG1) | 30 | IG SW(IG1) | ON |
| | Headlamp automatic-shutdown function | 35 | HD AUTO-CUT | OFF |
| | Response by the front-ECU | 70 | FRONT ECU ACK | HI-BEAM ACK |

Main Index
Group TOC

| Item | Input signal | Item No. | Display on M.U.T.-III | Normal condition |
|---|---|---|---|---|
| PASSING LAMP | Passing lamp switch | 03 | PASSING SW | ON |
| | Response by the front-ECU | 70 | FRONT ECU ACK | NORMAL ACK or HI-BEAM ACK |
| F.FOG LAMP | Headlamp switch | 00 | HEADLAMP SW | Either of items is ON |
| | Tail lamp switch | 01 | TAIL LAMP SW | |
| | Ignition switch (IG1) | 30 | IG SW(IG1) | ON |
| | Headlamp automatic-shutdown function | 35 | HD AUTO-CUT | OFF |
| | Request of front fog lamp illumination | 36 | F.FOG LAMP | ON |
| | Response by the front-ECU | 70 | FRONT ECU ACK | NORMAL ACK |
| HD AUTO-CUT | Headlamp switch | 00 | HEADLAMP SW | Either is on |
| | Tail lamp switch | 01 | TAIL LAMP SW | |
| | Ignition switch (IG1) | 30 | IG SW(IG1) | OFF |
| | Driver's door switch | 32 | DR DOOR SW | ON |
| | Headlamp automatic-shutdown function | 35 | HD AUTO-CUT | ON |
| | Response by the front-ECU | 70 | FRONT ECU ACK | NORMAL ACK or HI-BEAM ACK |

*NOTE:*

1. *When checking the input signals (off, tail, low-beam or high-beam), turn the ignition switch to the "ON" position in order to disable the headlamp automatic-shutdown function. However, the titles on the M.U.T.-III screen will not be highlighted as this has nothing to do with actual lamp operation.*
2. *For checking item "HEADLAMP HI", the M.U.T.-III displays "OFF" on the item No.2 "DIMMER SW" when the headlamps are at high-beam. Therefore, the M.U.T.-III should display "ON" momentarily when the dimmer switch is operated.*

Main Index
Group TOC

## TURN SIGNAL LAMP

| Item | Input signal | Item No. | Display on M.U.T.-III | Normal condition |
|---|---|---|---|---|
| Turn-signal lamp (RH) | Turn-signal lamp switch (RH) | 10 | TURN SIG.RH | ON |
| | Turn-signal lamp switch (LH) | 11 | TURN SIG.LH | OFF |
| | Ignition switch (IG1) | 30 | IGNITION SW IG1 | ON |
| Turn-signal lamp (LH) | Turn-signal lamp switch (RH) | 10 | TURN SIG.RH | OFF |
| | Turn-signal lamp switch (LH) | 11 | TURN SIG.LH | ON |
| | Ignition switch (IG1) | 30 | IGNITION SW IG1 | ON |

## BUZZER

| Item | Input signal | Item No. | Display on M.U.T.-III | Normal condition |
|---|---|---|---|---|
| Lighting monitor buzzer | Headlamp switch | 00 | HEADLAMP SW | Either is on |
| | Tail lamp switch | 01 | TAIL LAMP SW | |
| | Ignition switch (IG1) | 30 | IGNITION SW IG1 | OFF |
| | Driver's door switch | 32 | DR DOOR SW | ON |
| | Headlamp automatic-shutdow n function | 35 | HD LAMP AUTOCUT | OFF |
| | Buzzer | 43 | BUZZER | ON |
| KEY REMND.ALM | Ignition switch (IG1) | 30 | IG SW(IG1) | OFF |
| | Driver's door switch | 32 | DR DOOR SW | ON |
| | Buzzer | 43 | BUZZER | ON |

*NOTE: The headlamp automatic-shutdown function works in approximately one second after the lamping monitor buzzer starts sounding, and then the buzzer ceases sounding.*

## Keyless entry system

| Item | Input signal | Item No. | Display on M.U.T.-III | Normal condition |
|---|---|---|---|---|
| Multi-close | Reception of power window switch | 33 | P/W SW ACCEPT | PERMIT |
| | Multimode keyless entry system | 34 | KEYLESS ENTRY | Multi-close (only momentarily when switch is operated) |
| | Response by power window module | 71 | P/W ECU ACK | NORMAL ACK or P/WLOCK ACK |
| | Response by the sunroof-ECU | 72 | S/R ECU ACK | NORMAL ACK to INPUT CHECK (only when the switch is operated) |

Main Index
Group TOC

## Sunroof

| Item | Input signal | Item No. | Display on M.U.T.-III | Normal condition |
|---|---|---|---|---|
| SUNROOF OPE. | Ignition switch (IG1) | 30 | IG SW (IG1) | ON |
| | Response by power window module | 71 | P/W ECU ACK | NORMAL ACK |
| | Response by the sunroof-ECU | 72 | S/R ECU ACK | INPUT CHECK (only momentarily when switch is operated) |
| REAR S/R LOCK | Ignition switch (IG1) | 30 | IG SW (IG1) | ON |
| | Buzzer | 43 | BUZZER | ON |
| | Response by power window module | 71 | P/W ECU ACK | P/W LOCK ACK |
| | Response by the sunroof-ECU | 72 | S/R ECU ACK | BUZZER ACK |

## ETACS SWITCH DATA CHART

| Item No. | Check items | Display on M.U.T.-III | Check conditions | Normal conditions |
|---|---|---|---|---|
| 1* | Specification switching terminal | Destination switch 1 | OFF: Vehicles for Europe | OFF |
| 2* | Specification switching terminal | Destination switch 2 | ON: Vehicles for Europe | ON |
| 3 | Key reminder switch | Key reminder switch | Key reminder switch: ON (when the ignition key is pulled off) | ON |
| | | | Key reminder switch: OFF (Insert the ignition key) | OFF |
| 4 | Hazard warning lamp switch | Hazard lamp switch | Hazard warning lamp switch: ON (when the switch is operated) | ON |
| | | | Hazard warning lamp switch: ON (when the switch is not operated) | OFF |
| 5 | Passenger's door switch | Passenger’s door switch | Front passenger's door: open | ON |
| | | | Front passenger's door: Closed | OFF |
| 7 | Tailgate switch | Trunk or lift gate switch | Tailgate: OPEN | ON |
| | | | Tailgate: CLOSE | OFF |
| 9 | Rear wiper auto-stop switch | Rear wiper auto stop switch | When rear wiper is operating | ON |
| | | | When the rear wiper is not working | OFF |
| 10 | Front fog lamp switch | Front fog lamp switch | Front fog lamp switch: ON (when the switch is operated) | ON |
| | | | Front fog lamp switch: ON (when the switch is not operated) | OFF |

Main Index
Group TOC

| Item No. | Check items | Display on M.U.T.-III | Check conditions | Normal conditions |
|---|---|---|---|---|
| 12 | Driver’s seatbelt switch | Driver’s seat belt switch | Driver’s seat belt switch: ON (when the driver’s seat belt is unfastened) | ON |
| | | | Driver’s seat belt switch: OFF (when the driver’s seat belt is fastened) | OFF |
| 14 | Electric remote-controlled door mirror (folding/unfolding) switch | Retractable mirror switch | Electric remote-controlled door mirror (folding/unfolding) switch: ON (when the switch is operated) | ON |
| | | | Electric remote-controlled door mirror (folding/unfolding) switch: ON (when the switch is not operated) | OFF |
| 18 | Tailgate key unlock switch | Trunk key unlock switch | Tailgate key unlock switch: ON (when the key is turned) | ON |
| | | | Tailgate key unlock switch: OFF | OFF |
| 19 | Tailgate key lock switch | Rear gate key lock switch | Tailgate key lock switch: ON (when the key is turned) | ON |
| | | | Tailgate key lock switch: OFF | OFF |
| 21 | Driver's door lock actuator lock switch | Dr door lock actuator lock SW | Driver's door: Locked | ON |
| | | | Driver's door: Other than "locked" | OFF |
| 22 | Driver's door lock actuator unlock switch | Dr door lock actuator unlock SW | Driver's door: Unlocked | ON |
| | | | Driver's door: Other than "Unlocked" | OFF |
| 26 | Central door locking | Centre door lock switch | When the central door locking operates | ON |
| | | | When the central door locking does not operate | OFF |
| 27 | Central door unlock | Centre door unlock switch | When the central door unlocking operates | ON |
| | | | When the central door unlocking does not operate | OFF |
| 30 | Tailgate lock release handle switch | Gate opener switch | Tailgate lock release handle switch: When being operated | ON |
| | | | Tailgate lock release handle switch: When not being operated | OFF |
| 31 | Room lamp "ON" switch | Room lamp ALL ON switch | Room lamp "ON" switch: ON | ON |
| | | | Room lamp "ON" switch: OFF | OFF |
| 32 | Room lamp "OFF" switch | Room lamp ALL OFF switch | Room lamp "OFF" switch: ON | ON |
| | | | Room lamp "OFF" switch: OFF | OFF |
| 35 | DRL changeover terminal | Daytime running lamp switch | When DRL is equipped: ON | ON |
| | | | When DRL is not equipped: OFF | OFF |
| 36 | Diagnosis connector | M.U.T. diagnosis connector | Diagnosis control line: Earthed | ON |
| | | | Diagnosis control line: Not earthed | OFF |
| 41 | Rear door (RH) switch | Rear door (right side) switch | Rear door (RH): open | ON |
| | | | Rear door (RH): Closed | OFF |

Main Index
Group TOC

| Item No. | Check items | Display on M.U.T.-III | Check conditions | Normal conditions |
|---|---|---|---|---|
| 42 | Rear door (LH) switch | Rear door (left side) switch | Rear door (LH): open | ON |
| | | | Rear door (LH): Closed | OFF |
| 43 | Front passenger's seat belt switch | Passenger's seat belt switch | Front passenger's seat belt switch: ON (when the seat is occupied but the seat belt is unfastened) | ON |
| | | | Front passenger's seat belt switch: OFF (when the seat belt is fastened) | OFF |

*: Market can be changed by combination of item Nos. 01 and 02.

## ETACS ANALOGUE DATA CHART

| Item No. | Check items | Display on M.U.T.-III | How to check |
|---|---|---|---|
| 2 | Windshield intermittent wiper volume | Wiper int. time volume voltage | Displays the voltage in the windshield wiper intermittent volume.<br>Changes in accordance with the position of the windshield wiper intermittent volume. |
| 3 | Vehicle speed signal | Vehicle speed | Displays the vehicle speed<br>Changes in accordance with the vehicle speed. |
| 4 | Room lamp timer period | Room lamp auto-cut timer | Displays room lamp timer period. |
| 5 | Headlamp automatic shutdown timer period | Headlamp auto-cut timer | Displays headlamp automatic shutdown period (timing). |
| 6 | Power window key-off timer period | Power window delay timer | Displays power window key-off timer period (timing). |
| 8 | Windshield intermittent wiper interval | Wiper intermittent time | Displays windshield intermittent wiper interval (with chart)<br>Changes according to the windshield wiper intermittent volume position and the vehicle speed. |

## PULSE CHECK

M1549015100454

**⚠ CAUTION**

**Before connecting or disconnecting the M.U.T.-III, turn the ignition switch to the "LOCK" (OFF) position.**

1. The input signals (signals other than communication line signals), which are compatible with the SWS monitor by using the M.U.T.-III or voltmeter, can be confirmed by the Pulse Check.

*NOTE: If a problem is found in the "Pulse Check", refer to the Problems during Input Signal Check <Service data, function diagnosis or pulse check> (Refer to P.54E-45).*

2. Use the M.U.T.-III or voltmeter to check the following input signals.

## SWITCHES WHICH ARE APPLICABLE TO INPUT SIGNAL CHECK, AND THEIR CHECK CONDITIONS

| Input signal | Requirements for sounding buzzer |
|---|---|
| Inhibitor switch ("R" position) | When the ignition switch is turned ON and the selector lever is moved to the R position. |

Main Index
Group TOC

## M.U.T.-III DRIVE RECORDER FUNCTION

M1549017800200

1. The SWS monitor cartridge memory can store the ECU check results, the service data, the communication data obtained by the function diagnosis. This communication data can be displayed as a chart or graphical form.
2. If data obtained by the drive recorder function has to be stored for long time, the data can be transferred to the SWS monitor cartridge. By doing this, you can disconnect the M.U.T.-III to prevent excessive battery drain.

   *NOTE: For the details about the M.U.T.-III drive recorder function, refer to M.U.T.-III User's Manual.*

# DIAGNOSIS CODE CHART

M1549000700698

| Diagnosis code No. | Diagnostic item | Reference page |
|---|---|---|
| 01 | Trouble in SWS communication line system or ETACS-ECU | P.54E-26 |
| 02 | Communication error with column switch | P.54E-28 |
| 03 | Communication error with front-ECU | P.54E-29 |
| 04*1 | Communication error with sunroof-ECU | P.54E-30 |
| 05 | Communication error with power window main switch | P.54E-31 |
| 10 | Bus off | P.54E-32 |
| 11 | Engine-A/T-ECU time-out (related to engine) | P.54E-33 |
| 12 | Engine-A/T-ECU time-out (related to A/T) | P.54E-34 |
| 13 | A/C-ECU time-out | P.54E-35 |
| 14 | Meter time-out | P.54E-37 |
| 15*2 | Centre display unit time-out | – |
| 21 | Meter failure information | P.54E-38 |
| 23*2 | Communication error with electric tailgate control unit | – |

*NOTE:*

- **1: For vehicles without sunroof, diagnosis code No.4 does not mean that there is a problem.*
- **2: Diagnosis code Nos. 15 and 23 does not mean that there is a problem.*

Main Index
Group TOC

# DIAGNOSTIC TROUBLE CODE PROCEDURES

## Diagnosis code No.01 Trouble in SWS communication line system or ETACS-ECU

**⚠ CAUTION**

**If diagnosis code No. 01 is set in the ETACS-ECU, diagnose the CAN bus lines.**

**SWS Communication Line**

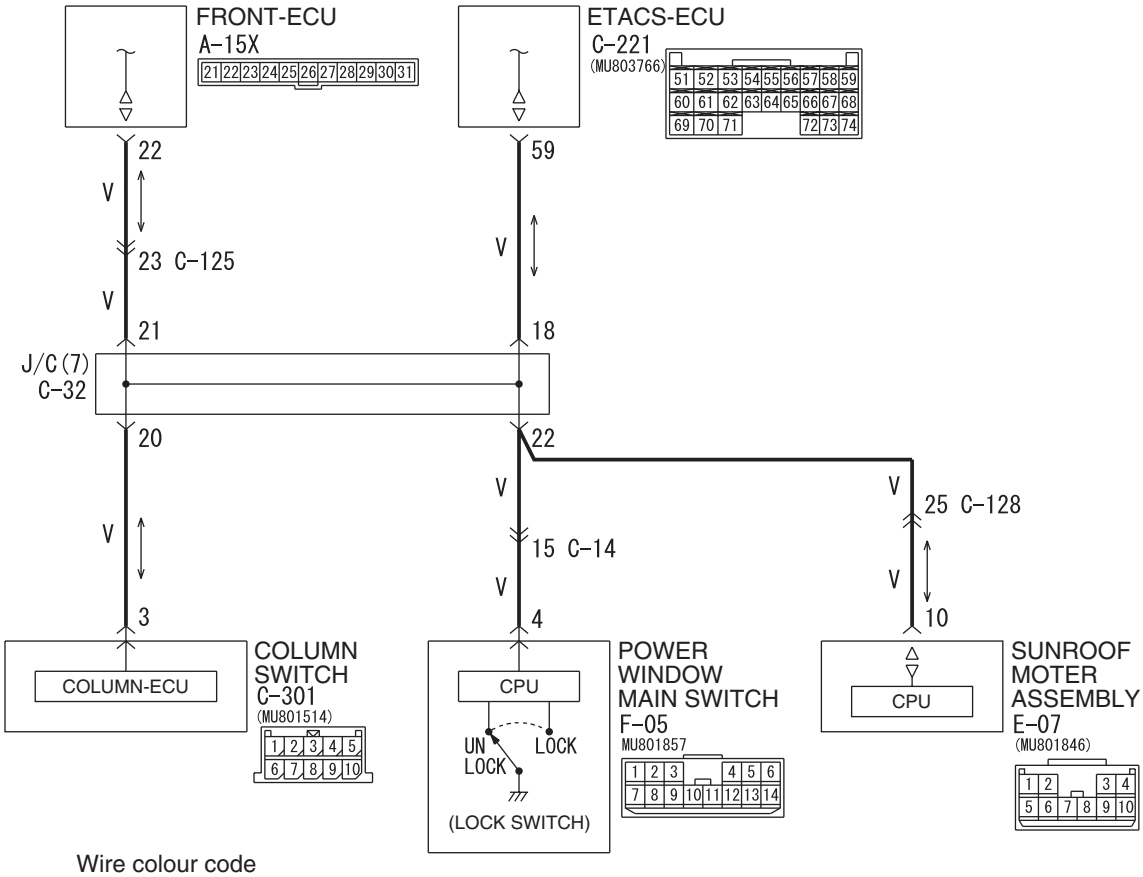


W6X54X067A

## TROUBLE JUDGMENT

The ETACS-ECU communicates with the column switch, the front-ECU, the sunroof motor assembly and the power window main switch through the SWS communication line. If there is any trouble in the ETACS-ECU or the SWS communication lines, diagnosis code No. 01 will be set.

## COMMENT ON TROUBLE SYMPTOM

The wiring harness wire or connectors may have loose, corroded, or damage terminals, or terminals pushed back in the connector, or the ETACS-ECU may be defective.

## POSSIBLE CAUSES

- Malfunction of the ETACS-ECU
- Damaged harness wires and connectors

Main Index
Group TOC

## DIAGNOSIS PROCEDURE

**Step 1. M.U.T.-III CAN bus diagnostics**
Use the M.U.T.-III to diagnose the CAN bus lines.

**Q: Is the check result normal?**
**YES :** Go to Step 2.
**NO :** Repair the CAN bus line (Refer to GROUP 54F – Troubleshooting P.54F-13).

**Step 2. Check whether the diagnosis code is reset.**
Check again if the diagnosis code is set.
(1) Ignition switch: LOCK (OFF) position to ON
(2) Erase the diagnosis code.
(3) On completion, check that the diagnosis code is not reset.

**Q: Is the check result normal?**
**YES :** If a trouble is solved, it is determined that there is an intermittent malfunction such as poor engaged connector(s) or open circuit (Refer to GROUP 00 – How to use troubleshooting/Inspection Service Points P.00-5).
**NO :** Go to Step 3.

**Step 3. ECU check by using the SWS monitor**
Check that the SWS communication lines are in good condition.
- Ignition switch: ON

**ECUS TO BE CHECKED**
- Column ECU
- ETACS-ECU
- Front ECU
- P/W MODULE
- Sunroof-ECU

**OK: "OK" is displayed for all the items**

**Q: Are the check result normal?**
**Normal conditions are displayed for all the items. :** Intermittent malfunction (Refer to GROUP 00 – How to Use Troubleshooting/Inspection Service Points P.00-5).
**"NG" is displayed on the "COLUMN ECU" menu. :** Refer to Inspection Procedure A-2 "Communication with the column switch (column-ECU) is not possible P.54E-51."
**"NG" is displayed on the "ETACS ECU" menu. :** Refer to Inspection Procedure A-3 "Communication with the ETACS-ECU is not possible P.54E-55."
**"NG" is displayed on the "FRONT ECU" menu. :** Refer to Inspection Procedure A-4 "Communication with the front-ECU is not possible P.54E-60."
**"NG" is displayed on the "P/W MODULE" menu. :** Refer to Inspection Procedure A-5 "Communication with the power window main switch (power window module) is not possible P.54E-64."
**"NG" is displayed on the "Sunroof ECU" menu. :** Refer to Inspection Procedure A-6 "Communication with the sunroof motor assembly (sunroof-ECU) is not possible P.54E-71."

Main Index
Group TOC

## Diagnosis code No.02 Communication error with column switch

⚠ CAUTION

**If diagnosis code No. 02 is set in the ETACS-ECU, diagnose the CAN bus lines.**

## TROUBLE JUDGMENT

The ETACS-ECU communicates with the column switch through the SWS communication lines. If there is any trouble in that communication, diagnosis code No. 02 will be set.

## COMMENT ON TROUBLE SYMPTOM

The column switch, the ETACS-ECU, connector(s), or wiring harness between the two may be defective.

## POSSIBLE CAUSES

- Malfunction of the column switch
- Malfunction of the ETACS-ECU
- Damaged harness wires and connectors

## DIAGNOSIS PROCEDURE

**Step 1. M.U.T.-III CAN bus diagnostics**

Use the M.U.T.-III to diagnose the CAN bus lines.

**Q: Is the check result normal?**

**YES :** Go to Step 2.

**NO :** Repair the CAN bus line (Refer to GROUP 54F – Troubleshooting P.54F-13).

**Step 2.Check whether the diagnosis code is reset.**

Check again if the diagnosis code is set.

(1) Erase the diagnosis code.
(2) Ignition switch: LOCK (OFF) position to ON
(3) On completion, check that the diagnosis code is not reset.

**Q: Is the check result normal?**

**YES : .** If a trouble is solved, it is determined that there is an intermittent malfunction such as poor engaged connector(s) or open circuit (Refer to GROUP 00 – How to use troubleshooting/Inspection Service Points P.00-5).

**NO : .** Go to Step 3.

**Step 3. ECU check by using the SWS monitor**

Check that the power supply and earth lines to the ETACS-ECU and the column switch (column-ECU) and the SWS communication lines are normal.

- Ignition switch: OFF

**ECUS TO BE CHECKED**

- Column ECU
- ETACS-ECU

**OK: "OK" is displayed for all the items**

**Q: Are the check result normal?**

**Normal conditions are displayed for all the items. :** The trouble can be an intermittent malfunction (Refer to GROUP 00 – How to Cope with Intermittent Malfunction P.00-5).

**"NG" is displayed on the "COLUMN ECU" menu. :** Refer to Inspection Procedure A-2 "Communication with the column switch (column-ECU) is not possible P.54E-51."

**"NG" is displayed on the "ETACS ECU" menu. :** Refer to Inspection Procedure A-3 "Communication with the ETACS-ECU is not possible P.54E-55."

## Diagnosis code No.03 Communication error with front-ECU

**⚠ CAUTION**
**If diagnosis code No. 03 is set in the ETACS-ECU, diagnose the CAN bus lines.**

### TROUBLE JUDGMENT

The ETACS-ECU communicates with the front-ECU through the SWS communication line. If there is any trouble in that communication, diagnosis code No. 03 will be set.

### COMMENTS ON TROUBLE SYMPTOM

The front-ECU, the ETACS-ECU, connector(s), or wiring harness between the two may be defective.

### POSSIBLE CAUSES

- Malfunction of the front ECU
- Malfunction of the ETACS-ECU
- Damaged harness wires and connectors

### DIAGNOSIS PROCEDURE

**Step 1. M.U.T.-III CAN bus diagnostics**
Use the M.U.T.-III to diagnose the CAN bus lines.

**Q: Is the check result normal?**

**YES :** Go to Step 2.
**NO :** Repair the CAN bus line (Refer to GROUP 54F – Troubleshooting P.54F-13).

**Step 2.Check whether the diagnosis code is reset.**
Check again if the diagnosis code is set.
(1) Erase the diagnosis code.
(2) Ignition switch: LOCK (OFF) position to ON
(3) On completion, check that the diagnosis code is not reset.

**Q: Is the check result normal?**
**YES : .** If a trouble is solved, it is determined that there is an intermittent malfunction such as poor engaged connector(s) or open circuit (Refer to GROUP 00 – How to use troubleshooting/Inspection Service Points P.00-5).
**NO : .** Go to Step 3.

**Step 3. ECU check by using the SWS monitor**
Check that the power supply and earth lines to the ETACS-ECU and the front-ECU and the SWS communication lines are normal.
- Ignition switch: OFF

**ECUS TO BE CHECKED**
- Front ECU
- ETACS-ECU

**OK: "OK" are displayed for all the items**

**Q: Are the check result normal?**
**Normal conditions are displayed for all the items. :** Intermittent malfunction (Refer to GROUP 00 – How to Use Troubleshooting/Inspection Service Points P.00-5).
**"NG" is displayed on the "FRONT ECU" menu. :** Refer to Inspection Procedure A-4 "Communication with the front-ECU is not possible P.54E-60."
**"NG" is displayed on the "ETACS ECU" menu. :** Refer to Inspection Procedure A-3 "Communication with the ETACS-ECU is not possible P.54E-55."

Main Index
Group TOC

## Diagnosis code No.04 Communication error with sunroof-ECU

**⚠ CAUTION**
**If diagnosis code No. 04 is set in the ETACS-ECU, diagnose the CAN bus lines.**

### TROUBLE JUDGMENT

The ETACS-ECU communicates with the sunroof motor assembly (sunroof-ECU) through the SWS communication line. If there is any trouble in that communication, diagnosis code No. 04 will be set.

*NOTE: For vehicles without sunroof, diagnosis code No. 04 does not mean that there is a problem.*

### COMMENTS ON TROUBLE SYMPTOM

The sunroof motor assembly (sunroof-ECU), the ETACS-ECU, connector(s), or wiring harness between the two may be defective.

### POSSIBLE CAUSES

- Malfunction of the sunroof motor assembly (snuroof-ECU)
- Malfunction of the ETACS-ECU
- Damaged harness wires and connectors

### DIAGNOSIS PROCEDURE

**Step 1. M.U.T.-III CAN bus diagnostics**
Use the M.U.T.-III to diagnose the CAN bus lines.

**Q: Is the check result normal?**
**YES :** Go to Step 2.
**NO :** Repair the CAN bus line (Refer to GROUP 54F – Troubleshooting P.54F-13).

**Step 2.Check whether the diagnosis code is reset.**
Check again if the diagnosis code is set.
(1) Erase the diagnosis code.
(2) Ignition switch: LOCK (OFF) position to ON
(3) On completion, check that the diagnosis code is not reset.

**Q: Is the check result normal?**
**YES :** If a trouble is solved, it is determined that there is an intermittent malfunction such as poor engaged connector(s) or open circuit (Refer to GROUP 00 – How to use troubleshooting/Inspection Service Points P.00-5).
**NO :** Go to Step 3.

**Step 3. ECU check by using the SWS monitor**
Check that the power supply and earth lines to the ETACS-ECU and the sunroof motor assembly (sunroof-ECU) and the SWS communication lines are normal.
- Ignition switch: OFF

**ECUS TO BE CHECKED**
- Sunroof ECU
- ETACS-ECU

**OK: "OK" are displayed for all the items**

**Q: Are the check result normal?**
**Normal conditions are displayed for all the items. :** Intermittent malfunction (Refer to GROUP 00 – How to Use Troubleshooting/Inspection Service Points P.00-5).
**"NG" is displayed on the "SUNROOF ECU" menu. :** Refer to Inspection Procedure A-6 "Communication with the sunroof motor assembly (sunroof-ECU) is not possible P.54E-71."
**"NG" is displayed on the "ETACS ECU" menu. :** Refer to Inspection Procedure A-3 "Communication with the ETACS-ECU is not possible P.54E-55."

## Diagnosis code No.05 Communication error with power window main switch

**⚠ CAUTION**

**If diagnosis code No. 05 is set in the ETACS-ECU, diagnose the CAN bus lines.**

## TROUBLE JUDGMENT

The ETACS-ECU communicates with the power window main switch through the SWS communication lines. If there is any trouble in that communication, diagnosis code No. 05 will be set.

## COMMENTS ON TROUBLE SYMPTOM

If the power window main switch, the ETACS-ECU or the CAN bus line fails, this diagnosis code will be set.

## POSSIBLE CAUSES

- Malfunction of the power window main switch
- Malfunction of the ETACS-ECU switch
- Malfunction of the CAN bus

## DIAGNOSIS PROCEDURE

**Step 1. M.U.T.-III CAN bus diagnostics**

Use the M.U.T.-III to diagnose the CAN bus lines.

**Q: Is the check result normal?**

**YES :** Go to Step 2.

**NO :** Repair the CAN bus line (Refer to GROUP 54F – Troubleshooting P.54F-13).

**Step 2. Check whether the diagnosis code is reset.**

Check again if the diagnosis code is set.

(1) Erase the diagnosis code.
(2) Ignition switch: LOCK (OFF) position to ON
(3) On completion, check that the diagnosis code is not reset.

**Q: Is the diagnosis code set?**

**YES : .** Go to Step 3.

**NO : .** Intermittent malfunction (Refer to GROUP 00 – How to Use Troubleshooting/Inspection Service Points P.00-5).

**Step 3. ECU check by using the SWS monitor**

Check that the power supply and earth lines to the ETACS-ECU and the power window main switch (power window module) and the SWS communication lines are normal.

- Ignition switch: ON

**ECUS TO BE CHECKED**

- P/W MODULE
- ETACS-ECU

**OK: "OK" are displayed for all the items**

**Q: Are the check result normal?**

**Normal conditions are displayed for all the items. :** Intermittent malfunction (Refer to GROUP 00 – How to Use Troubleshooting/Inspection Service Points P.00-5).

**"NG" is displayed on the "P/W MODULE" menu. :** Refer to Inspection Procedure A-5 "Communication with power window main switch (power window module) is impossible P.54E-64."

**"NG" is displayed on the "ETACS ECU" menu. :** Refer to Inspection Procedure A-3 "Communication with ETACS-ECU is impossible P.54E-55."

Main Index
Group TOC

## Diagnosis code No.10 Bus off

⚠ CAUTION
**If diagnosis code No. 10 is set in the ETACS-ECU, diagnose the CAN bus lines.**

⚠ CAUTION
**Whenever the ECU is replaced, ensure that the input and output signal circuits are normal.**

### TROUBLE JUDGMENT

Diagnosis code No. 10 will be stored when the ETACS-ECU ceases CAN communication (bus off) and then resumes the communication by turning the ignition switch to the "LOCK" (OFF) position.

### COMMENTS ON TROUBLE SYMPTOM

The wiring harness wire or connectors may have loose, corroded, or damage terminals, or terminals pushed back in the connector, or the SWS communication lines may be defective.

### POSSIBLE CAUSES

Damaged harness wires and connectors

### DIAGNOSIS PROCEDURE

**Step 1. M.U.T.-III CAN bus diagnostics**
Use the M.U.T.-III to diagnose the CAN bus lines.

**Q: Is the check result normal?**
**YES :** Go to Step 2.
**NO :** Repair the CAN bus line (Refer to GROUP 54F – Troubleshooting P.54F-13). Repair the CAN bus line and go to Step 3.

**Step 2. Check whether the diagnosis code is reset.**
Check again if the diagnosis code is set.
(1) Erase the diagnosis code.
(2) Ignition: LOCK (OFF) position to ON
(3) On completion, check that the diagnosis code is not reset.

**Q: Is the check result normal?**
**YES :** If a trouble is solved, it is determined that there is an intermittent malfunction such as poor engaged connector(s) or open circuit (Refer to GROUP 00 – How to use troubleshooting/Inspection Service Points P.00-5).
**NO :** Replace the ETACS-ECU, and then go to Step 3.

**Step 3. Check whether the diagnosis code is reset.**
Recheck if the diagnosis code is set.
(1) Erase the diagnosis code.
(2) Ignition switch: LOCK (OFF) position to ON
(3) Check if the diagnosis code is set.

**Q: Is the check result normal?**
**YES :** The procedure is complete.
**NO :** Return to Step 1.

Main Index
Group TOC

## Diagnosis code No.11 Engine-A/T-ECU time-out (related to engine)

**⚠ CAUTION**
**If diagnosis code No. 11 is set in the ETACS, diagnose the CAN main bus line.**

**⚠ CAUTION**
**Whenever the ECU is replaced, ensure that the communication circuit is normal.**

### TROUBLE JUDGMENT

- The ETACS-ECU receives engine and transmission control-related signals from the engine-A/T-ECU via the CAN bus lines. If the ECU can not receive the engine control system-related signal at all, diagnosis code No. 11 will be set.

### COMMENTS ON TROUBLE SYMPTOM

**Current trouble**

- Connector(s) or wiring harness in the CAN bus lines between the ETACS-ECU and the engine-A/T-ECU, the power supply system to the engine-A/T-ECU, or the ETACS-ECU itself may be defective.

**Past trouble**

- If diagnosis code No.11 is stored as a past trouble, carry out diagnosis with particular emphasis on wiring and connector(s) in the CAN bus line between the ETACS-ECU and the engine-A/T-ECU, and the power supply system to the engine-A/T-ECU. For diagnosis procedures, refer to "How to treat past trouble" (Refer to GROUP 00 – How to Use Troubleshooting/Inspection Service Points P.00-5).

*NOTE: For a past trouble, you can not find it by the M.U.T.-III CAN bus diagnostics even if there is any failure in CAN bus lines. In this case, refer to GROUP 00, How to Use Troubleshooting/Inspection Service Points P.00-5 and check the CAN bus lines. You can narrow down the possible cause of the trouble by referring to the diagnosis code, which is set regarding the CAN communication-linked ECUs (Refer to GROUP 54F – CAN Bus Line Diagnostic Flow P.54F-7).*

### POSSIBLE CAUSES

- Malfunction of the engine-A/T-ECU
- Malfunction of the ETACS-ECU
- Malfunction of the CAN bus

### DIAGNOSTIC PROCEDURE

**Step 1. M.U.T.-III CAN bus diagnostics**
Use the M.U.T.-III to diagnose the CAN bus lines.

**Q: Is the check result normal?**
**YES :** Go to Step 2.
**NO :** Repair the CAN bus line (Refer to GROUP 54F – Troubleshooting P.54F-13). Repair the CAN bus line and go to Step 6.

**Step 2. Check for engine control diagnosis code.**
Check that the engine control system sets a diagnosis code.

**Q: Is the check result normal?**
**YES :** Go to Step 3.
**NO :** Engine (Refer to GROUP 13B – Troubleshooting P.13B-15).

**Step 3. M.U.T.-III diagnosis code**
Check if a diagnosis code, which relates to CAN communication-linked systems below, is set.

- Combination meter

U1100: Engine-related time-out diagnosis code

- Multi-display

U1100: Engine-related time-out diagnosis code

**Q: Is the check result normal?**
**YES :** Go to Step 5.
**NO :** Go to Step 4.

**Step 4. Check whether the diagnosis code is reset.**
Check again if the diagnosis code is set.
(1) Erase the diagnosis code.
(2) Ignition switch: LOCK (OFF) position to ON
(3) On completion, check that the diagnosis code is not reset.

**Q: Is the check result normal?**
**YES :** A poor connection, open circuit or other intermittent malfunction is present in the CAN bus lines between the Engine-A/T-ECU and the ETACS-ECU (Refer to GROUP 00 – How to Use Troubleshooting/Inspection Service Points P.00-5).
**NO :** Replace the engine-A/T-ECU, and then go to Step 6.

Main Index
Group TOC

**Step 5. Check whether the diagnosis code is reset.**

Check again if the diagnosis code is set.
(1) Erase the diagnosis code.
(2) Ignition switch: LOCK (OFF) position to ON
(3) On completion, check that the diagnosis code is not reset.

**Q: Is the check result normal?**
**YES :** A poor connection, open circuit or other intermittent malfunction is present in the CAN bus lines between the Engine-A/T-ECU and the ETACS-ECU (Refer to GROUP 00 – How to Use Troubleshooting/Inspection Service Points P.00-5).
**NO :** Replace the ETACS-ECU, and then go to Step 6.

**Step 6. Check whether the diagnosis code is reset.**

Recheck if the diagnosis code is set.
(1) Erase the diagnosis code.
(2) Ignition switch: LOCK (OFF) position to ON
(3) On completion, check that the diagnosis code is not reset.

**Q: Is the check result normal?**
**YES :** The procedure is complete.
**NO :** Return to Step 1.

## Diagnosis code No.12 Engine-A/T-ECU time-out (related to A/T)

**⚠ CAUTION**
**If diagnosis code No. 12 is set in the ETACS, diagnose the CAN main bus line.**

**⚠ CAUTION**
**Whenever the ECU is replaced, ensure that the communication circuit is normal.**

### TROUBLE JUDGMENT

- The ETACS-ECU receives engine and transmission control-related signals from the engine-A/T-ECU via the CAN bus lines. If the ECU cannot receive the transmission control signal at all, diagnosis code No. 12 will be set.

### COMMENTS ON TROUBLE SYMPTOM

**Current trouble**

- Connector(s) or wiring harness in the CAN bus lines between the ETACS-ECU and the engine-A/T-ECU, the power supply system to the engine-A/T-ECU, or the ETACS-ECU itself may be defective.

**Past trouble**

- If diagnosis code No.12 is stored as a past trouble, carry out diagnosis with particular emphasis on wiring and connector(s) in the CAN bus line between the ETACS-ECU and the engine-A/T-ECU, and the power supply system to the engine-A/T-ECU. For diagnosis procedures, refer to "How to treat past trouble" (Refer to GROUP 00 – How to Use Troubleshooting/Inspection Service Points P.00-5).

*NOTE: For a past trouble, you can not find it by the M.U.T.-III CAN bus diagnostics even if there is any failure in CAN bus lines. In this case, refer to GROUP 00, How to Use Troubleshooting/Inspection Service Points P.00-5 and check the CAN bus lines. You can narrow down the possible cause of the trouble by referring to the diagnosis code, which is set regarding the CAN communication-linked ECUs (Refer to GROUP 54F – CAN Bus Line Diagnostic Flow P.54F-7).*

### POSSIBLE CAUSES

- Malfunction of the engine-A/T-ECU
- Malfunction of the ETACS-ECU
- Malfunction of the CAN bus

### DIAGNOSTIC PROCEDURE

**Step 1. M.U.T.-III CAN bus diagnostics**

Use the M.U.T.-III to diagnose the CAN bus lines.

**Q: Is the check result normal?**
**YES :** Go to Step 2.
**NO :** Repair the CAN bus line (Refer to GROUP 54F – Troubleshooting P.54F-13). Repair the CAN bus line and go to Step 6.

Main Index
Group TOC

**Step 2. Check for A/T control-related diagnosis code.**

Check if an A/T system diagnosis code is set.

**Q: Is the check result normal?**

**YES :** Go to Step 3.

**NO :** Diagnose the automatic transmission system (Refer to GROUP 23 – Troubleshooting P.23A-17).

**Step 3. M.U.T.-III diagnosis code**

Check if a diagnosis code, which relates to CAN communication-linked systems below, is set.

- Combination meter

U1101: Engine-related time-out diagnosis code

**Q: Is the check result normal?**

**YES :** Go to Step 5.

**NO :** Go to Step 4.

**Step 4. Check whether the diagnosis code is reset.**

Check again if the diagnosis code is set.

(1) Erase the diagnosis code.
(2) Ignition switch: LOCK (OFF) position to ON
(3) On completion, check that the diagnosis code is not reset.

**Q: Is the check result normal?**

**YES :** A poor connection, open circuit or other intermittent malfunction is present in the CAN bus lines between the engine-A/T-ECU and the ETACS-ECU (Refer to GROUP 00 – How to Use Troubleshooting/Inspection Service Points P.00-5).

**NO :** Replace the engine-A/T-ECU, and then go to Step 6.

**Step 5. Check whether the diagnosis code is reset.**

Check again if the diagnosis code is set.

(1) Erase the diagnosis code.
(2) Ignition switch: LOCK (OFF) position to ON
(3) On completion, check that the diagnosis code is not reset.

**Q: Is the check result normal?**

**YES :** A poor connection, open circuit or other intermittent malfunction is present in the CAN bus lines between the engine-A/T-ECU and the ETACS-ECU (Refer to GROUP 00 – How to Use Troubleshooting/Inspection Service Points P.00-5).

**NO :** Replace the ETACS-ECU, and then go to Step 6.

**Step 6. Check whether the diagnosis code is reset.**

Recheck if the diagnosis code is set.

(1) Erase the diagnosis code.
(2) Ignition switch: LOCK (OFF) position to ON
(3) On completion, check that the diagnosis code is not reset.

**Q: Is the check result normal?**

**YES :** The procedure is complete.

**NO :** Return to Step 1.

## Diagnosis code No.13 A/C-ECU time-out

**⚠ CAUTION**

**If diagnosis code No. 13 is set in the ETACS-ECU, diagnose the CAN bus lines.**

**⚠ CAUTION**

**Whenever the ECU is replaced, ensure that the input and output signal circuits are normal.**

### TROUBLE JUDGMENT

The ETACS-ECU receives air conditioner system-related signal from the A/C-ECU. If air conditioner control system-related signal can not be received at all, diagnosis code No.13 will be set.

### COMMENT ON TROUBLE SYMPTOM

**Current trouble**

- Connector(s) or wiring harness in the CAN bus lines between the A/C-ECU and the ETACS-ECU, the power supply system to the combination meter, the combination meter itself, or the ETACS-ECU may be defective.

Main Index
Group TOC

**Past trouble**

- If diagnosis code No.13 is stored as a past trouble, carry out diagnosis with particular emphasis on wiring and connector(s) in the CAN bus line between the ETACS-ECU and the A/C-ECU, and the power supply system to the A/C-ECU. For diagnosis procedures, refer to "How to treat past trouble" (Refer to GROUP 00 – How to Use Troubleshooting/Inspection Service Points P.00-5).

*NOTE: For a past trouble, you can not find it by the M.U.T.-III CAN bus diagnostics even if there is any failure in CAN bus lines. In this case, refer to GROUP 00, How to Use Troubleshooting/Inspection Service Points P.00-5 and check the CAN bus lines. You can narrow down the possible cause of the trouble by referring to the diagnosis code, which is set regarding the CAN communication-linked ECUs (Refer to GROUP 54F – CAN Bus Line Diagnostic Flow P.54F-7).*

## POSSIBLE CAUSES

- Malfunction of the A/C-ECU
- Malfunction of the ETACS-ECU
- Damaged harness wires and connectors

## DIAGNOSIS PROCEDURE

**Step 1. M.U.T.-III CAN bus diagnostics**

Use the M.U.T.-III to diagnose the CAN bus lines.

**Q: Is the check result normal?**

**YES :** Go to Step 2.

**NO :** Repair the CAN bus line (Refer to GROUP 54F – Troubleshooting P.54F-13). Repair the CAN bus line and go to Step 5.

**Step 2. M.U.T.-III diagnosis code**

Check if an A/C-ECU diagnosis code is set.

**Q: Is the diagnosis code set?**

**YES :** Diagnose the A/C-ECU (Refer to GROUP 55 – Troubleshooting P.55-8).

**NO :** Go to Step 3.

**Step 3. Check whether the diagnosis code is reset.**

Check again if the diagnosis code is set.

(1) Erase the diagnosis code.
(2) Ignition switch: ON → LOCK (OFF) → ON
(3) On completion, check that the diagnosis code is not reset.

**Q: Is the check result normal?**

**YES :** A poor connection, open circuit or other intermittent malfunction is present in the CAN bus lines between the A/C-ECU and the ETACS-ECU (Refer to GROUP 00 – How to Use Troubleshooting/Inspection Service Points P.00-5).

**NO :** Replace the A/C-ECU, and then go to Step 4.

**Step 4. Check whether the diagnosis code is reset.**

Check again if the diagnosis code is set.

(1) Erase the diagnosis code.
(2) Ignition switch: ON → LOCK (OFF) → ON
(3) On completion, check that the diagnosis code is not reset.

**Q: Is the check result normal?**

**YES :** A poor connection, open circuit or other intermittent malfunction is present in the CAN bus lines between the A/C-ECU and the ETACS-ECU (Refer to GROUP 00 – How to Use Troubleshooting/Inspection Service Points P.00-5).

**NO :** Replace the ETACS-ECU, and then go to Step 5.

**Step 5. Check whether the diagnosis code is reset.**

Recheck if the diagnosis code is set.

(1) Erase the diagnosis code.
(2) Ignition switch: ON → LOCK (OFF) → ON
(3) On completion, check that the diagnosis code is not reset.

**Q: Is the check result normal?**

**YES :** The procedure is complete.

**NO :** Return to Step 1.

Main Index
Group TOC

## Diagnosis code No.14 Meter time-out

**⚠ CAUTION**
**If diagnosis code No. 14 is set in the ETACS-ECU, diagnose the CAN bus lines.**

**⚠ CAUTION**
**Whenever the ECU is replaced, ensure that the input and output signal circuits are normal.**

## TROUBLE JUDGMENT

The ETACS-ECU receives combination meter-related signal from the combination meter. If meter-related signal can not be received at all, diagnosis code No.14 will be set.

## COMMENT ON TROUBLE SYMPTOM

**Current trouble**

- Connector(s) or wiring harness in the CAN bus lines between the combination meter and the ETACS-ECU, the power supply system to the combination meter, the combination meter itself, or the ETACS-ECU may be defective.

**Past trouble**

- If diagnosis code No.14 is stored as a past trouble, carry out diagnosis with particular emphasis on wiring and connector(s) in the CAN bus line between the combination meter and the ETACS-ECU, and the power supply system to the combination meter. For diagnosis procedures, refer to "How to treat past trouble" (Refer to GROUP 00 – How to Use Troubleshooting/Inspection Service Points P.00-5).

*NOTE: For a past trouble, you can not find it by the M.U.T.-III CAN bus diagnostics even if there is any failure in CAN bus lines. In this case, refer to GROUP 00, How to Use Troubleshooting/Inspection Service Points P.00-5 and check the CAN bus lines. You can narrow down the possible cause of the trouble by referring to the diagnosis code, which is set regarding the CAN communication-linked ECUs (Refer to GROUP 54F – CAN Bus Line Diagnostic Flow P.54F-7).*

## POSSIBLE CAUSES

- Malfunction of the combination meter
- Malfunction of the ETACS-ECU
- Damaged harness wires and connectors

## DIAGNOSIS PROCEDURE

**Step 1. M.U.T.-III CAN bus diagnostics**
Use the M.U.T.-III to diagnose the CAN bus lines.

**Q: Is the check result normal?**
**YES :** Go to Step 2.
**NO :** Repair the CAN bus line (Refer to GROUP 54F – Troubleshooting P.54F-13). Repair the CAN bus line and go to Step 6.

**Step 2. M.U.T.-III diagnosis code**
Check whether the combination meter-related diagnosis code is set.

**Q: Is the diagnosis code set?**
**YES :** Diagnose the combination meter (Refer to GROUP 54A – Troubleshooting P.54A-12).
**NO :** Go to Step 3.

**Step 3. M.U.T.-III diagnosis code**
Check if a diagnosis code, which relates to CAN communication-linked systems below, is set.

- Engine

U1108: Combination meter time-out diagnosis code

**Q: Is the diagnosis code set?**
**YES :** Go to Step 4.
**NO :** Go to Step 5.

**Step 4. Check whether the diagnosis code is reset.**
Check again if the diagnosis code is set.
(1) Erase the diagnosis code.
(2) Ignition switch: LOCK (OFF) position to ON
(3) On completion, check that the diagnosis code is not reset.

**Q: Is the check result normal?**
**YES :** A poor connection, open circuit or other intermittent malfunction is present in the CAN bus lines between the combination meter and the ETACS-ECU (Refer to GROUP 00 – How to Use Troubleshooting/Inspection Service Points P.00-5).
**NO :** Replace the combination meter, and then go to Step 6.

Main Index
Group TOC

**Step 5. Check whether the diagnosis code is reset.**

Check again if the diagnosis code is set.
(1) Erase the diagnosis code.
(2) Ignition switch: LOCK (OFF) position to ON
(3) On completion, check that the diagnosis code is not reset.

**Q: Is the check result normal?**
**YES :** A poor connection, open circuit or other intermittent malfunction is present in the CAN bus lines between the combination meter and the ETACS-ECU (Refer to GROUP 00 – How to Use Troubleshooting/Inspection Service Points P.00-5).
**NO :** Replace the ETACS-ECU, and then go to Step 6.

**Step 6. Check whether the diagnosis code is reset.**

Recheck if the diagnosis code is set.
(1) Erase the diagnosis code.
(2) Ignition switch: LOCK (OFF) position to ON
(3) On completion, check that the diagnosis code is not reset.

**Q: Is the check result normal?**
**YES :** The procedure is complete.
**NO :** Return to Step 1.

## Diagnosis code No.21 Meter failure information

**⚠ CAUTION**
**If diagnosis code No. 21 is set in the ETACS-ECU, diagnose the CAN bus lines.**

**⚠ CAUTION**
**Whenever the ECU is replaced, ensure that the input and output signal circuits are normal.**

### TROUBLE JUDGMENT

The ETACS-ECU receives vehicle speed-related signal from the combination meter via the CAN bus lines. If failure information is sent to the vehicle speed-related signal, diagnosis code No.21 will be set.

### COMMENT ON TROUBLE SYMPTOM

**Current trouble**

- Connector(s) or wiring harness in the CAN bus lines, the engine-A/T-ECU <A/T> or the engine-ECU <M/T>, the combination meter, the ETACS-ECU or the output shaft speed sensor may be defective.

**Past trouble**

- If diagnosis code 21 is stored as a past trouble, carry out diagnosis with particular emphasis on wiring and connector(s) between the engine-A-M/T-ECU and the output shaft speed sensor. For diagnosis procedures, refer to "How to treat past trouble" (Refer to GROUP 00 – How to Use Troubleshooting/Inspection Service Points P.00-5).

### POSSIBLE CAUSES

- Malfunction of the engine-A/T-ECU
- Defective combination meter
- Malfunction of the ETACS-ECU

### DIAGNOSIS PROCEDURE

**Step 1. M.U.T.-III CAN bus diagnostics**

Use the M.U.T.-III to diagnose the CAN bus lines.

**Q: Is the check result normal?**
**YES :** Go to Step 2.
**NO :** Repair the CAN bus line (Refer to GROUP 54F – Troubleshooting P.54F-13). Repair the CAN bus line and go to Step 6.

**Step 2. M.U.T.-III diagnosis code**

Check whether the combination meter-related diagnosis code is set.

**Q: Is the diagnosis code set?**
**YES :** Diagnose the combination meter (Refer to GROUP 54A – Troubleshooting P.54A-74).
**NO :** Go to Step 3.

Main Index
Group TOC

**Step 3. M.U.T.-III diagnosis code**

Check if a diagnosis code, which relates to CAN communication-linked systems below, is set.

- Multi-centre display

U1113: Combination meter failure information diagnosis code

**Q: Is the diagnosis code set?**

**YES :** Go to Step 4.
**NO :** Go to Step 5.

**Step 4. Check whether the diagnosis code is reset.**

Check again if the diagnosis code is set.
(1) Erase the diagnosis code.
(2) Ignition switch: LOCK (OFF) position to ON
(3) On completion, check that the diagnosis code is not reset.

**Q: Is the check result normal?**

**YES :** A poor connection, open circuit or other intermittent malfunction is present in the CAN bus lines between the Engine-A/T-ECU and the output shaft speed sensor (Refer to GROUP 00 – How to Use Troubleshooting/Inspection Service Points P.00-5).
**NO :** Replace the combination meter, and then go to Step 6 .

**Step 5. Check whether the diagnosis code is reset.**

Recheck if the diagnosis code is set.
(1) Erase the diagnosis code.
(2) Ignition switch: LOCK (OFF) position to ON
(3) On completion, check that the diagnosis code is not reset.

**Q: Is the check result normal?**

**YES :** A poor connection, open circuit or other intermittent malfunction is present in the CAN bus lines between the Engine-A/T-ECU and the output shaft speed sensor (Refer to GROUP 00 – How to Use Troubleshooting/Inspection Service Points P.00-5).
**NO :** Replace the ETACS-ECU, and then go to Step 6.

**Step 6. Check whether the diagnosis code is reset.**

Recheck if the diagnosis code is set.
(1) Erase the diagnosis code.
(2) Ignition switch: LOCK (OFF) position to ON
(3) On completion, check that the diagnosis code is not reset.

**Q: Is the check result normal?**

**YES :** The procedure is complete.
**NO :** Return to Step 1.

Main Index
Group TOC

# TROUBLE SYMPTOM CHART

M1549000801795

| Symptom | Inspection procedure number | Reference page |
|---|---|---|
| Communication with the SWS monitor is not possible. | A-1 | P.54E-48 |
| Communication with the column switch (column-ECU) is not possible. | A-2 | P.54E-51 |
| Communication with the ETACS-ECU is not possible. | A-3 | P.54E-55 |
| Communication with the front-ECU is not possible. | A-4 | P.54E-60 |
| Communication with the power window main switch (power window module) is not possible. | A-5 | P.54E-64 |
| Communication with the sunroof motor assembly (sunroof-ECU) is not possible. | A-6 | P.54E-71 |

## <FUNCTION SYSTEM>

| Symptom | | Inspection procedure number | Reference page |
|---|---|---|---|
| Alarm Function | Ignition key reminder buzzer function does not work. | B-1 | P.54E-76 |
| | Lamp reminder buzzer function does not work normally. | B-2 | P.54E-77 |
| | R (reverse) position warning function does not work. | B-3 | P.54E-79 |
| | Door-ajar warning buzzer function does not work. | B-4 | P.54E-80 |
| | Turn-signal lamp operation sound function does not work normally. | B-5 | P.54E-82 |
| Central door locking | Central door locking system does not work. | C-1 | P.54E-84 |
| | The central door locking system does not function by using the driver's door lock switch. | C-2 | P.54E-86 |
| | The central door lock switch (incorporated with the power window main switch) fails to perform central door locking operation. | C-3 | P.54E-87 |
| | A door can not be locked or unlocked by the central door locking system. | C-4 | P.54E-89 |
| | The tailgate cannot be opened or closed. | C-5 | P.54E-95 |
| | Selector "P" position-linked door unlock function does not operate. | C-6 | P.54E-98 |

Main Index
Group TOC

| Symptom | | Inspection procedure number | Reference page |
|---|---|---|---|
| Power window | Power windows do not work at all. | D-1 | P.54E-99 |
| | Driver's power window does not work by means of the power window main switch. | D-2 | P.54E-101 |
| | Relevant power window(s) do not work by means of the front and rear power window sub switches. | D-3 | P.54E-103 |
| | Passenger's and/or rear power window(s) do not work by means of the power window main switch. | D-4 | P.54E-114 |
| | The window glass lowers automatically while it is rising. | D-5 | P.54E-122 |
| | Power window anti-trap function does not work normally. | D-6 | P.54E-123 |
| | The power window timer function does not work normally. | D-7 | P.54E-130 |
| Keyless entry system | Keyless entry system does not Work. | E-1 | P.54E-132 |
| | Keyless entry hazard lamp answerback function or the room lamp answerback function does not work normally. | E-2 | P.54E-134 |
| | Encrypted code cannot be registered. | E-3 | P.54E-135 |
| | The timer lock function does not work after the doors have been unlocked by the keyless entry system. | E-4 | P.54E-136 |
| | Multi-mode keyless entry system function does not work at all. | E-5 | P.54E-137 |
| Sunroof | The sunroof does not work at all. | F-1 | P.54E-139 |
| | Any of the sunroof switch positions is defective. | F-2 | P.54E-141 |
| | Sunroof timer function does not work normally. | F-3 | P.54E-142 |
| | The sunroof inhibition function does not work normally (The sunroof operation lock warning buzzer does not sound). | F-4 | P.54E-144 |
| | Sunroof anti-trap function does not work normally. | F-5 | P.54E-146 |

Main Index
Group TOC

| Symptom | | Inspection procedure number | Reference page |
|---|---|---|---|
| Windshield wiper and washer | The windshield wipers do not work at all. | G-1 | P.54E-147 |
| | The windshield wipers do not work when the wiper switch is at "INT", "WASHER" or "MIST" position. However, the wipers work at low speed when the switch is at "LO" and "HI" position. | G-2 | P.54E-151 |
| | The windshield wipers do not stop at the specified park position. | G-3 | P.54E-152 |
| | The windshield wipers do not work normally. | G-4 | P.54E-155 |
| | The intermittent wiper interval can not be adjusted by operating the windshield intermittent wiper volume control. | G-5 | P.54E-158 |
| | The intermittent wiper interval is not changed according to the vehicle speed. | G-6 | P.54E-159 |
| | The windshield washer does not work. | G-7 | P.54E-161 |
| Rear wiper and washer | The rear wiper does not work at all. | H-1 | P.54E-165 |
| | The rear wiper does not stop at the specified park position. | H-2 | P.54E-168 |
| | When the selector lever is moved to "R" position during the rear wiper operation, the rear wiper does not operate at the continuous mode. | H-3 | P.54E-172 |
| | The rear washer does not work. | H-4 | P.54E-173 |
| Electric retractable remote controlled door mirror | Electric retractable remote controlled door mirror does not work at all. | I-1 | P.54E-177 |
| | Left or right side electric retractable remote controlled door mirror does not work at all. | I-2 | P.54E-181 |
| | Electric retractable remote controlled door mirror timer function does not at all. | I-3 | P.54E-186 |
| | Vehicle speed-dependent unfolding function does not work normally. | I-4 | P.54E-187 |
| | Ignition-linked fold/unfold function does not work normally. | I-5 | P.54E-188 |
| | Keyless entry system-linked fold/unfold function does not work normally. | I-6 | P.54E-189 |
| Ignition key cylinder illumination lamp | The ignition key cylinder illumination lamp does not illuminate/extinguish normally. | J-1 | P.54E-190 |

Main Index
Group TOC

| Symptom | | Inspection procedure number | Reference page |
|---|---|---|---|
| Headlamp and tail lamp | The tail/stop lamps do not illuminate normally. | K-1 | P.54E-193 |
| | The low-beam headlamps do not illuminate normally. | K-2 | P.54E-195 |
| | The high-beam headlamps do not illuminate normally. | K-3 | P.54E-198 |
| | The high-beam and low-beam headlamps do not illuminate when the passing switch is operated. | K-4 | P.54E-199 |
| | The headlamp automatic-shutdown function does not work normally. | K-5 | P.54E-200 |
| | The auto lamp function does not work normally. | K-6 | P.54E-202 |
| | The wiper-linked auto lamp function does not work normally. | K-7 | P.54E-204 |
| | Any of tail lamps, position lamps or licence plate lamp does not illuminate. | K-8 | P.54E-205 |
| | The headlamp(s) do not illuminate. <Vehicles with halogen type headlamp> | K-9 | P.54E-211 |
| | The headlamp(s) do not illuminate. <Vehicles with discharge type headlamp> | K-10 | P.54E-216 |
| | The high-beam indicator lamp does not illuminate. | K-11 | P.54E-221 |
| | The headlamps do not illuminate when the lamping switch is at "TAIL" or "PASSING" position, but illuminate only at low beam when the switch is at "HEAD" position. However, the headlamps do not illuminate at high beam. | K-12 | P.54E-222 |
| Flasher timer | The turn-signal lamps do not illuminate. | L-1 | P.54E-223 |
| | The hazard warning lamps do not illuminate. | L-2 | P.54E-226 |
| | Any of the turn-signal lamps does not illuminate. | L-3 | P.54E-228 |
| | The turn-signal indicator lamp does not illuminate. | L-4 | P.54E-240 |
| Front fog lamp | The front fog lamps do not illuminate normally. | M-1 | P.54E-241 |
| | Any of the front fog lamps does not illuminate. | M-2 | P.54E-244 |
| | The front fog lamp indicator does not illuminate normally. | M-3 | P.54E-247 |

Main Index
Group TOC

| Symptom | | Inspection procedure number | Reference page |
|---|---|---|---|
| Interior lamp | The interior lamps (room ramp, rear personal lamps, door lamps, luggage compartment lamp, key cylinder illumination lamp) do not illuminate or extinguish normally. | N-1 | P.54E-248 |
| | The room lamp does not illuminate normally. | N-2 | P.54E-252 |
| | The rear personal lamp does not illuminate normally. | N-3 | P.54E-259 |
| | The luggage compartment lamp does not illuminate normally. | N-4 | P.54E-265 |
| | The door lamp does not illuminate normally. | N-5 | P.54E-268 |
| | Interior lamp automatic shutoff function does not work normally. | N-6 | P.54E-273 |
| | The door-ajar warning lamp does not illuminate/extinguish normally. | N-7 | P.54E-275 |
| Security alarm | The security alarm is not armed (the security indicator lamp does not illuminate). | O-1 | P.54E-278 |
| | The interior alarm does not work normally while the security alarm is triggered. | O-2 | P.54E-282 |
| | The hazard warning lights do not flash while the security alarm is triggered. | O-3 | P.54E-284 |
| | The horns do not sound while the security alarm is triggered. | O-4 | P.54E-285 |
| Seat belt reminder function does not work normally. | | Q-1 | P.54E-290 |

Main Index
Group TOC

# CHECK TROUBLE BY USING THE INPUT SIGNAL CHECK

M1549024200794

<Data list, function diagnosis or pulse check>

If a problem is found in the Service Data or Pulse Check inspection, observe the table below.

| Symptom | | Inspection procedure number | Reference page |
|---|---|---|---|
| The ignition switch (ACC) signal is not received. | | P-1 | P.54E-291 |
| The ignition switch (IG1) signal is not received. | | P-2 | P.54E-293 |
| The front fog lamp switch signal is not received. | | P-3 | P.54E-295 |
| The driver's door switch signal is not received. | | P-4 | P.54E-298 |
| Column switch (lighting and turn-signal lamp switch) | The tail lamp switch signal is not received. | P-5 | P.54E-300 |
| | The headlamp switch signal is not received. | | |
| | The dimmer switch signal is not received. | | |
| | The passing switch signal is not received. | | |
| | The turn-signal lamp switch (LH) signal is not received. | | |
| | The turn-signal lamp switch (RH) signal is not received. | | |
| Column switch (windshield wiper/washer and rear wiper washer switch) | The windshield mist wiper switch signal is not received. | P-6 | P.54E-302 |
| | The windshield intermittent wiper switch signal is not received. | | |
| | The windshield low-speed wiper switch signal is not received. | | |
| | The windshield high-speed wiper switch signal is not received. | | |
| | The windshield washer switch signal is not received. | | |
| | The rear wiper switch signal is not received. | | |
| | The rear washer switch signal is not received. | | |
| | The windshield intermittent wiper volume signal is not received. | P-7 | P.54E-303 |
| Power window main switch | When the power window main switch is operated, the switch signals are not received. | P-8 | P.54E-305 |
| Sunroof | When the sunroof switch is operated, the switch signals are not received. | P-9 | P.54E-307 |
| The key reminder switch signal is not received. | | P-10 | P.54E-310 |
| The hazard warning lamp switch signal is not received. | | P-11 | P.54E-313 |

Main Index
Group TOC

| Symptom | Inspection procedure number | Reference page |
|---|---|---|
| All the door switch signals are not received. | P-12 | P.54E-316 |
| The driver's door lock actuator switch signal is not received. | P-13 | P.54E-320 |
| The signal from the central door lock switch (incorporated with the power windows main switch) is not received. | P-14 | P.54E-323 |
| The tailgate lock release handle signal is not received. | P-15 | P.54E-326 |
| Signal is not received from the remote controlled mirror switch (folding/unfolding switch). | P-16 | P.54E-329 |
| The interior lamp "all on" or "all off" switch signal is not sent to the ETACS-ECU. | P-17 | P.54E-332 |
| The hood switch signal is not received. | P-18 | P.54E-336 |
| Each switch signal of the keyless entry transmitter is not received. | P-19 | P.54E-339 |
| Interior lamp loaded signal is not detected. | P-20 | P.54E-340 |
| The vehicle speed signal is not received. | P-21 | P.54E-343 |
| No photo sensor signal is received. | P-22 | P.54E-344 |

Main Index
Group TOC

# OPERATION AND FUNCTION QUICK-REFERENCE TABLE FOR INPUT SIGNAL INSPECTION PROCEDURES

M1549020300711

If troubles have occurred in the functions which use the SWS simultaneously, observe the table below to check input signals.

(This table shows only the input signals which will cause troubles in at least two functions simultaneously).

| Function | P-1 | P-2 | P-4 | P-5 | P-6 | P-11 | P-13 | P-14 | P-16 |
|---|---|---|---|---|---|---|---|---|---|
| Lamp reminder function | – | × | × | × | – | – | – | – | – |
| Control of central door locking | – | – | – | – | – | – | – | – | – |
| Key reminder function | – | – | × | – | – | × | – | – | – |
| Door locking released due to impact detection. | – | – | – | – | – | – | – | – | – |
| Keyless entry system | – | – | × | – | – | × | × | – | – |
| Keyless entry hazard warning lamp answerback | – | – | – | – | – | – | – | – | – |
| Power window control | – | × | – | – | – | – | – | – | – |
| Control of windshield wiper washer | × | – | – | – | × | – | – | × | – |
| Rear wiper washer control | × | – | – | – | × | – | – | – | – |
| Ignition key cylinder illumination lamp function | – | × | × | – | – | × | – | – | × |
| Headlamp control | – | × | – | × | – | – | – | – | – |
| Tail lamp control | – | × | – | × | – | – | – | – | – |
| Headlamp automatic-shutdown function | – | × | × | × | – | – | – | – | – |
| Fog lamp control | – | – | – | × | – | – | – | – | – |
| Turn-signal lamp control | – | × | – | × | – | – | – | – | – |
| Dome lamp control | – | × | × | – | – | × | × | – | × |
| Interior lamp automatic-shutdown function | × | – | – | – | – | – | – | – | × |
| Door-ajar indicator lamp | – | – | × | – | – | – | × | – | – |

Main Index
Group TOC

# SYMPTOM PROCEDURES

## INSPECTION PROCEDURE A-1: Communication with the SWS monitor is not possible.

**⚠ CAUTION**

**Whenever the ECU is replaced, ensure that the power supply circuit, the earthing circuit and the communication circuit are normal.**

**MUT-III Communication and ETACS-ECS Ground Circuit**

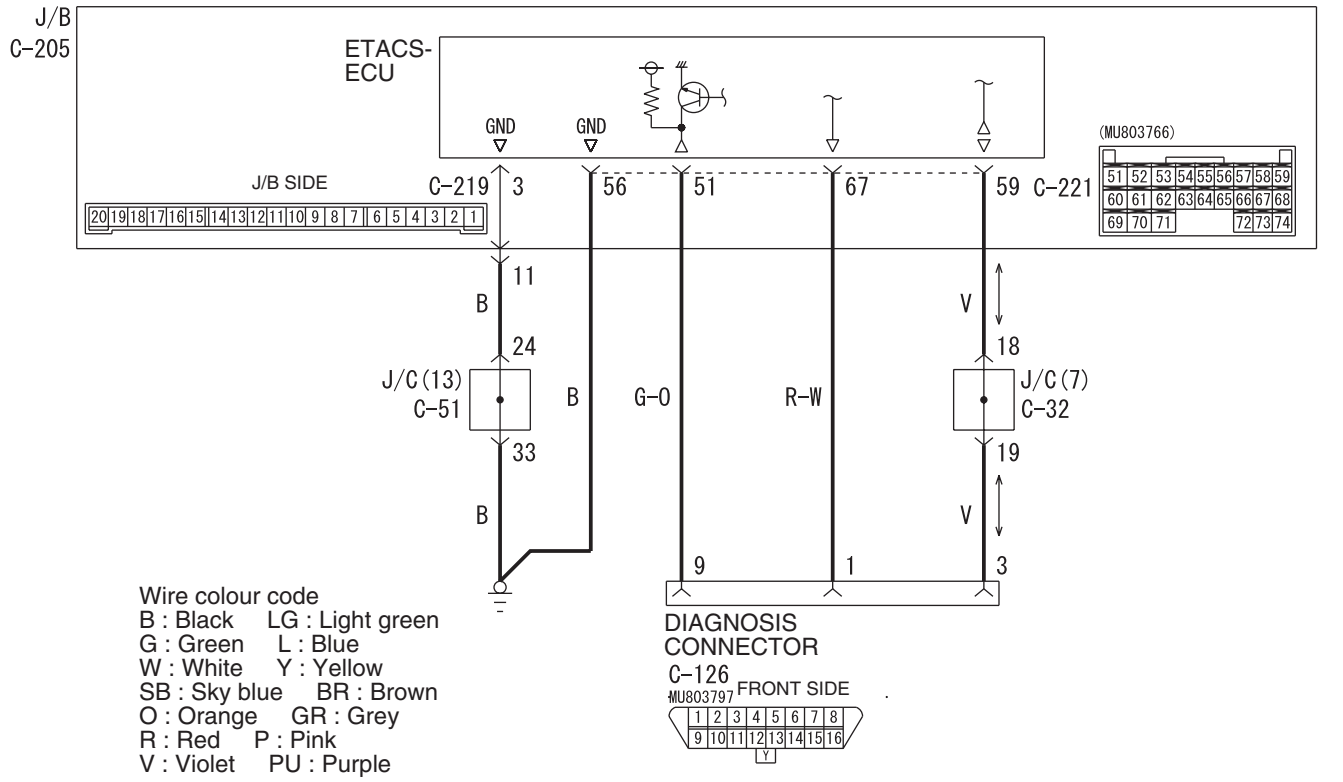


## COMMENTS ON TROUBLE SYMPTOM

The SWS monitor may be connected improperly.

## POSSIBLE CAUSES

- Malfunction of the SWS monitor body (I/F cartridge)
- Malfunction of the SWS monitor harness
- Malfunction of the ETACS-ECU
- Damaged harness wires and connectors

## DIAGNOSIS PROCEDURE

**Step 1. Check that the M.U.T.-III communicates with the other systems.**

Check whether the M.U.T.-III can communicate with the other systems.

**Q: Is the check result normal?**

**YES :** Go to Step 2.

**NO :** Diagnose the system, which cannot communicate with the M.U.T.-III.

Main Index
Group TOC

**Step 2. Check that the M.U.T.-III can communicate with the system.**

When the ignition switch is turned ON, check if the M.U.T.-III can communicate with the system.

**Q: Is the check result normal?**

**YES :** Refer to Inspection Procedure A-3 "Communication with the ETACS-ECU is not possible P.54E-55."

**NO :** Go to Step 3.

**Step 3. Connector check: C-221 ETACS-ECU connector**

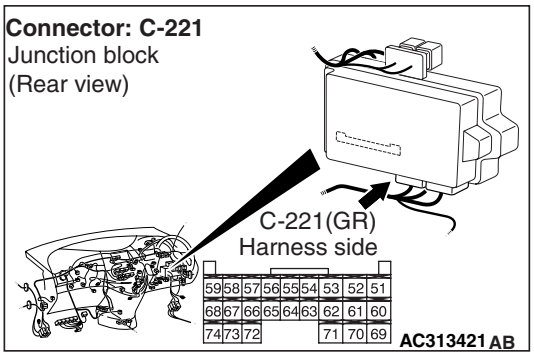


**Q: Is the check result normal?**

**YES :** Go to Step 4.

**NO :** Repair the defective connector.

**Step 4. Resistance measurement at the C-221 ETACS-ECU connector.**

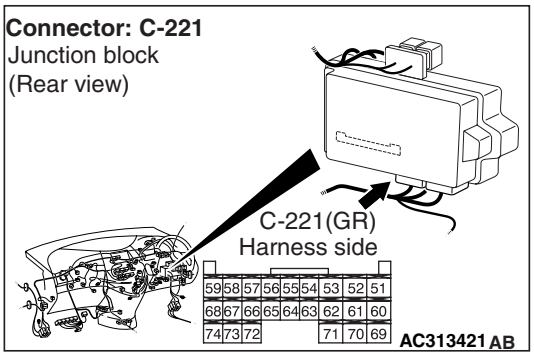


(1) Disconnect the connector, and measure at the wiring harness side.

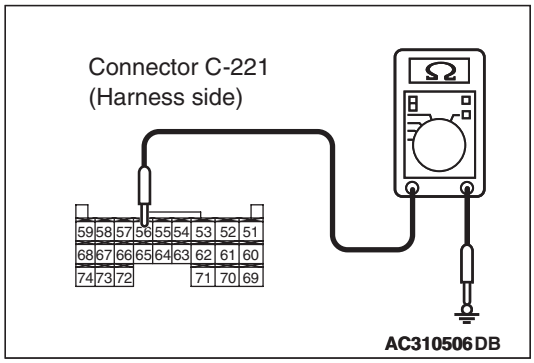


(2) Resistance between C-221 ETACS-ECU connector terminal No.56 and body earth

**OK: 2 Ω or less**

**Q: Is the check result normal?**

**YES :** Go to Step 6.

**NO :** Go to Step 5.

**Step 5. Check the wiring harness between C-221 ETACS-ECU connector terminal No.56 to body earth.**

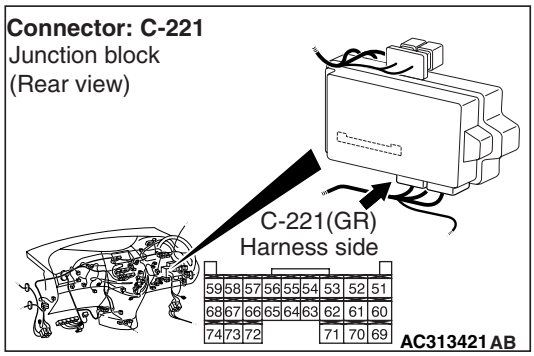


- Check the earth wires for open circuit.

**Q: Are the check results normal?**

**YES :** The trouble can be an intermittent malfunction (Refer to GROUP 00 – How to Cope with Intermittent Malfunction P.00-5).

**NO :** Repair the wiring harness.

Main Index
Group TOC

### Step 6. Connector check: C-126 diagnosis connector

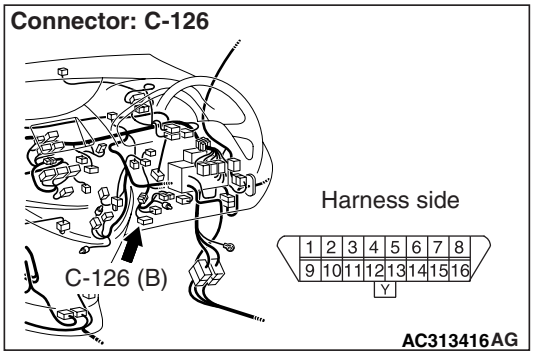


**Q: Is the check result normal?**
**YES :** Go to Step 7.
**NO :** Repair the defective connector.

### Step 7. Check the wiring harness from C-221 ETACS-ECU connector terminal Nos. 51 and 67 to C-126 diagnosis connector terminal Nos. 9 and 1.

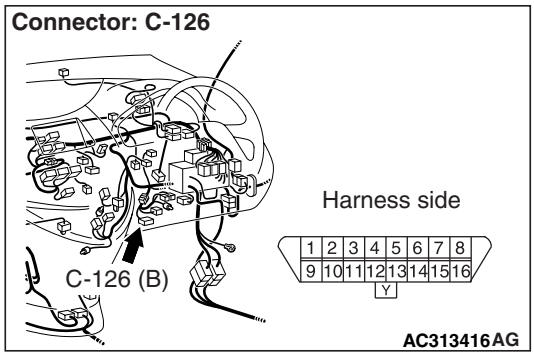


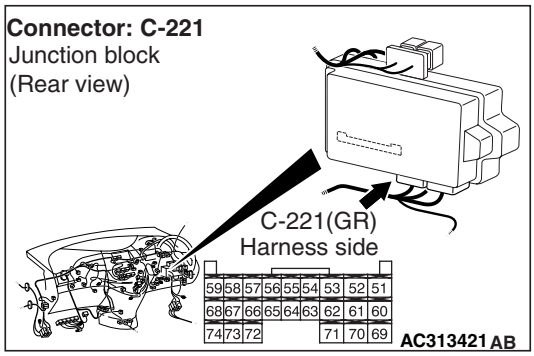


- Check the communication lines for open circuit.

**Q: Are the check results normal?**
**YES :** Replace the ETACS-ECU.
**NO :** Repair the wiring harness.

Main Index
Group TOC

## INSPECTION PROCEDURE A-2: Communication with the column switch (column-ECU) is not possible.

**⚠ CAUTION**

**Whenever the ECU is replaced, ensure that the power supply circuit, the earthing circuit and the communication circuit are normal.**

**Column Switch Power Supply and SWS Communication Circuit**

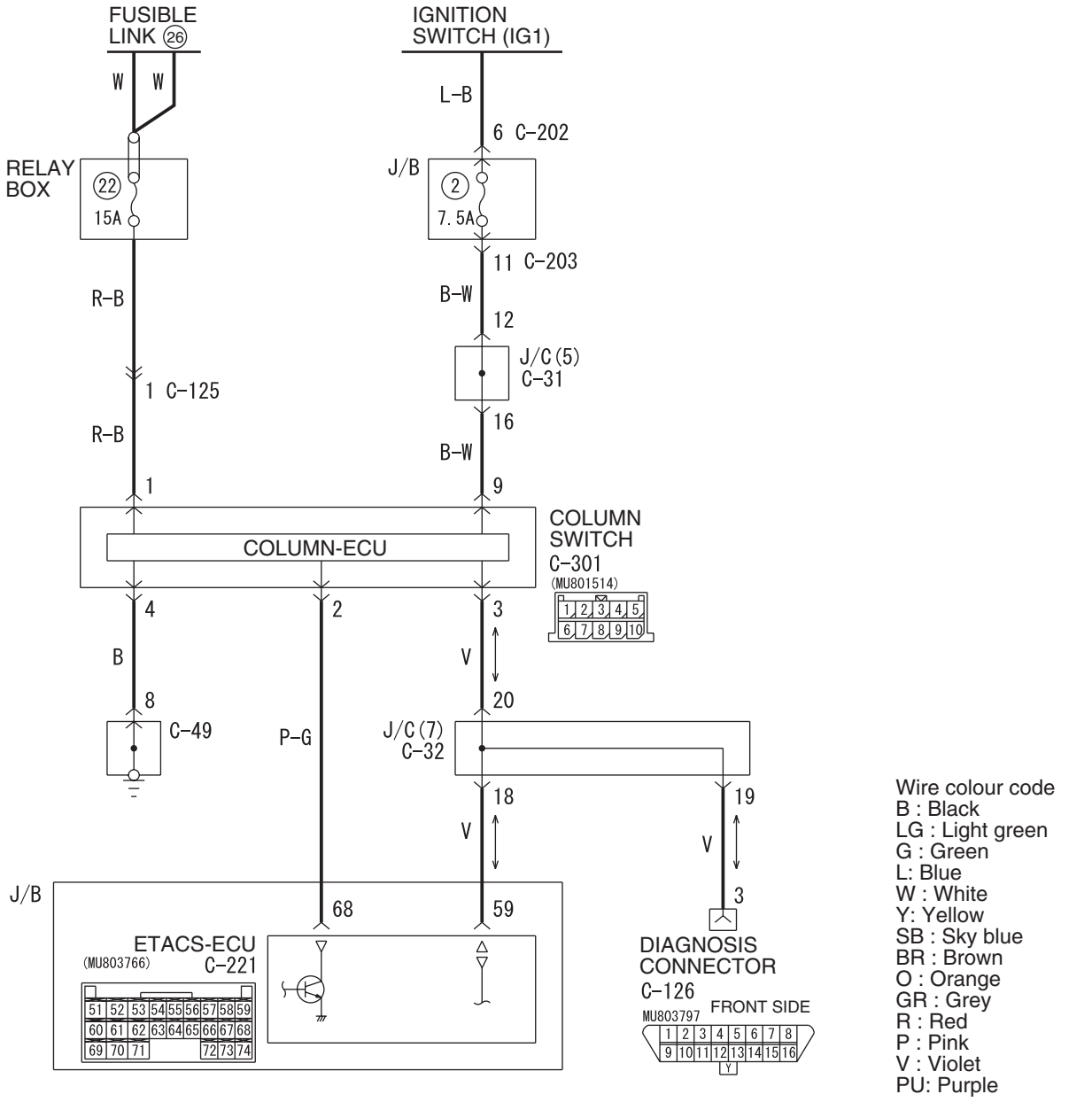


## COMMENTS ON TROUBLE SYMPTOM

The power supply circuit to the column switch (column-ECU) may be defective. If the wiring harness of the battery power supply circuit for the ECU (column switch terminal No.1) is defective, also check the power supply circuit to the ignition switch (IG1) (column switch terminal No.9) and repair if necessary.

## POSSIBLE CAUSES

- Malfunction of the ETACS-ECU
- Malfunction of the column switch
- Damaged harness wires and connectors

Main Index
Group TOC

## DIAGNOSIS PROCEDURE

**Step 1. ECU check by using the SWS monitor**
Check that the power supply and earth lines to the ETACS-ECU and the SWS communication lines are normal.
- Ignition switch: OFF

**ECUS TO BE CHECKED**
- ETACS ECU

**OK: "OK" is displayed on the "ETACS ECU" menu.**

**Q: Is the check result normal?**
**YES :** Go to Step 2.
**NO :** Refer to Inspection Procedure A-3 "Communication with the ETACS-ECU is not possible P.54E-55."

**Step 2. Connector check: C-301 column switch connector**

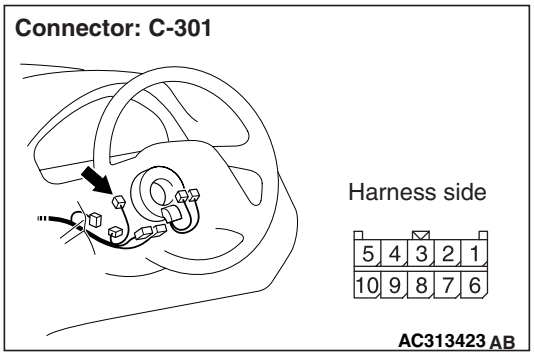


**Q: Is the check result normal?**
**YES :** Go to Step 3.
**NO :** Repair the defective connector.

**Step 3. Voltage measurement at the C-301 column switch connector.**

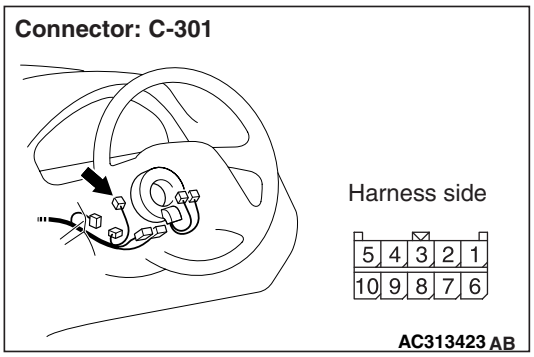


(1) Disconnect the connector, and measure at the wiring harness side.

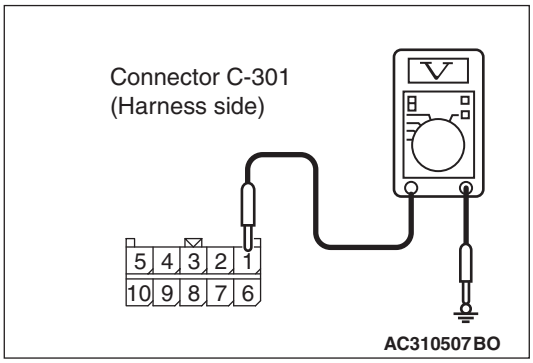


(2) Voltage between C-301 column switch connector No.1 and body earth

**OK: System voltage**

**Q: Is the check result normal?**
**YES :** Go to Step 5.
**NO :** Go to Step 4.

**Step 4. Check the wiring harness between C-301 column switch connector terminal No.1 to fusible link (26).**

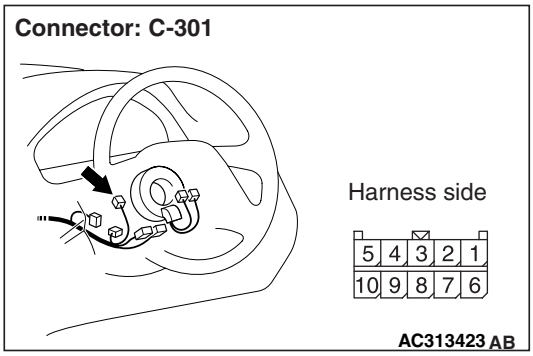


*NOTE:*

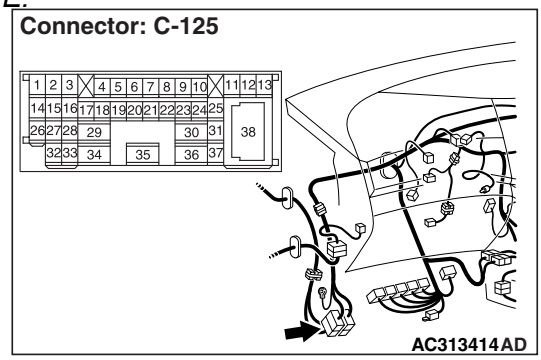


*Prior to the wiring harness inspection, check intermediate connectors C-125, and repair if necessary.*
- Check the power supply line for open circuit.

**Q: Is the check result normal?**
**YES :** The trouble can be an intermittent malfunction (Refer to GROUP 00 – How to Cope with Intermittent Malfunction P.00-5).
**NO :** Repair the wiring harness.

Main Index
Group TOC

### Step 5. Resistance measurement at the C-301 column switch connector.

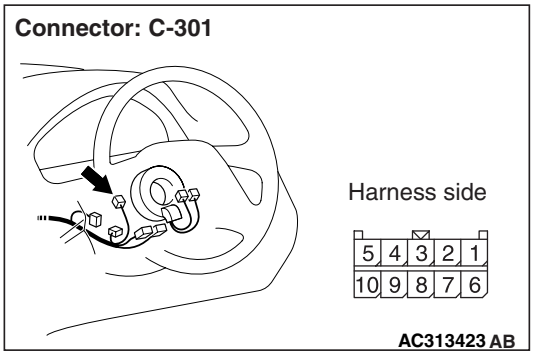


(1) Disconnect the connector, and measure at the wiring harness side.

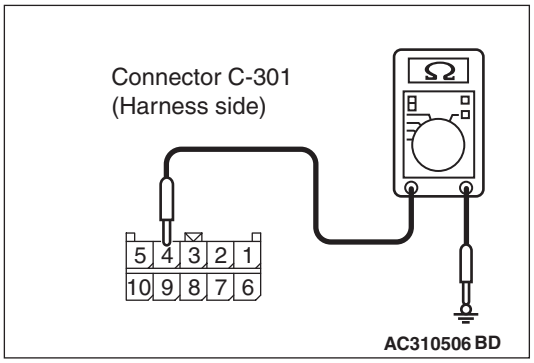


(2) Continuity between C-301 column switch connector No.4 and body earth

**OK: 2 Ω or less**

**Q: Is the check result normal?**
**YES :** Go to Step 8.
**NO :** Go to Step 6.

### Step 6. Connector check: C-49 earth connector

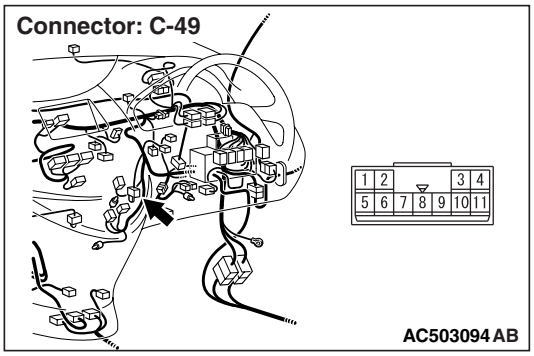


**Q: Is the check result normal?**
**YES :** Go to Step 7.
**NO :** Repair the defective connector.

### Step 7. Check the wiring harness between C-301 column switch connector terminal No.4 to C-49 earth connector terminal No.8.

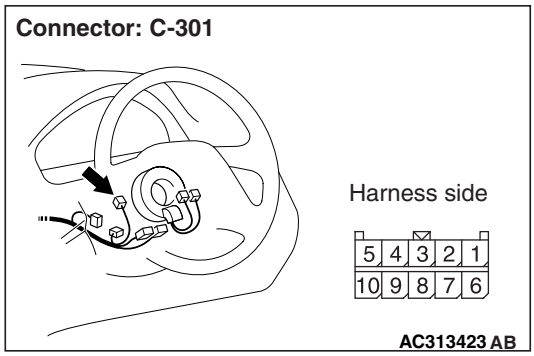


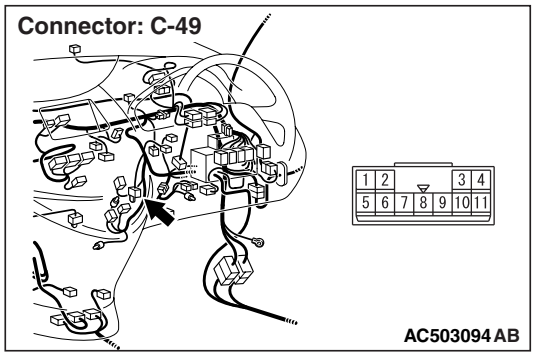


- Check the earth wires for open circuit.

**Q: Is the check result normal?**
**YES :** The trouble can be an intermittent malfunction (Refer to GROUP 00 – How to Cope with Intermittent Malfunction P.00-5).
**NO :** Repair the wiring harness.

### Step 8. Connector check: C-221 ETACS-ECU connector

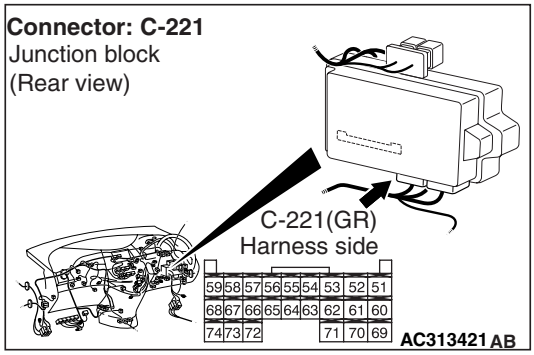


**Q: Is the check result normal?**
**YES :** Go to Step 9.
**NO :** Repair the defective connector.

Main Index
Group TOC

**Step 9. Check the wiring harness from C-221 ETACS-ECU connector terminal Nos. 59 and 68 to C-301 column switch connector terminal Nos. 3 and 2.**

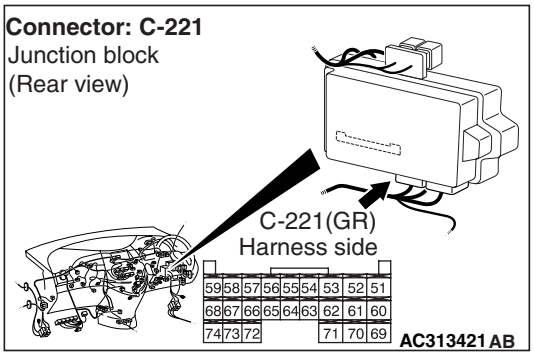


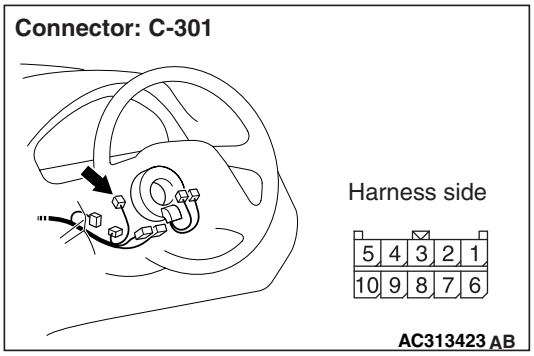


*NOTE:*

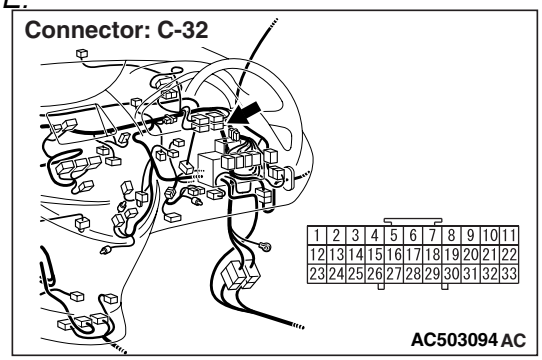


*Prior to the wiring harness inspection, check joint connector C-32, and repair if necessary.*

- Check the communication lines for open circuit.

**Q: Is the check result normal?**
**YES :** Go to Step 10.
**NO :** Repair the wiring harness.

**Step 10. ECU check by using the SWS monitor**

- Ignition switch: OFF

**ECUS TO BE CHECKED**

- COLUMN ECU

**OK: "OK" is displayed on the "COLUMN ECU" menu.**

**Q: Is the check result normal?**
**YES :** Go to Step 11.
**NO :** Replace the column switch.

**Step 11. Retest the system.**

Check that the ETACS-ECU communicates with the column switch.

**Q: Is the check result normal?**
**YES :** The trouble can be an intermittent malfunction (Refer to GROUP 00 – How to Cope with Intermittent Malfunction P.00-5).
**NO :** Replace the ETACS-ECU.

Main Index
Group TOC

## INSPECTION PROCEDURE A-3: Communication with the ETACS-ECU is not possible.

**⚠ CAUTION**

**Whenever the ECU is replaced, ensure that the power supply circuit, the earthing circuit and the communication circuit are normal.**

**ETACS-ECU Power Supply and SWS Communication Circuit**

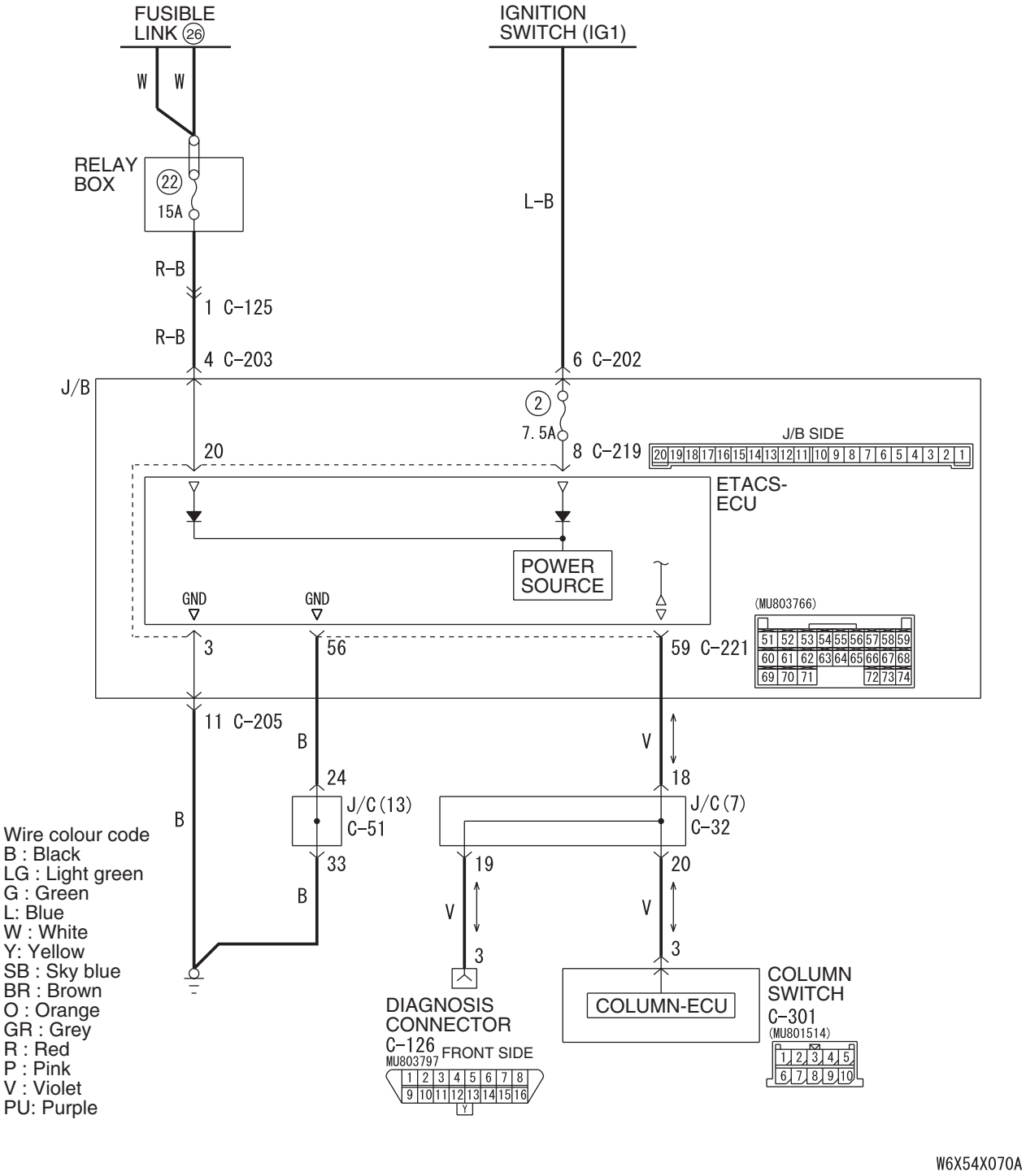

Main Index
Group TOC

## COMMENTS ON TROUBLE SYMPTOM

It is suspected that the power supply circuit to the ETACS-ECU is defective, or the wiring harness between the SWS monitor and the ETACS-ECU or their connector(s) is damaged. If the battery power supply circuit to the ECU (terminal No.20 of the ETACS-ECU) is damaged, also check the power supply circuit from the ignition switch (IG1) (terminal No.8 of the ETACS-ECU), and repair if necessary. If the earth circuit to the ECU (terminal No.3 of the ETACS-ECU) is defective, also check the earth circuit to the sensor (terminal No.56 of the ETACS-ECU), and repair if necessary.

## POSSIBLE CAUSES

- Malfunction of the ETACS-ECU
- Damaged harness wires and connectors

## DIAGNOSIS PROCEDURE

### Step 1. Connector check: C-219 ETACS-ECU connector

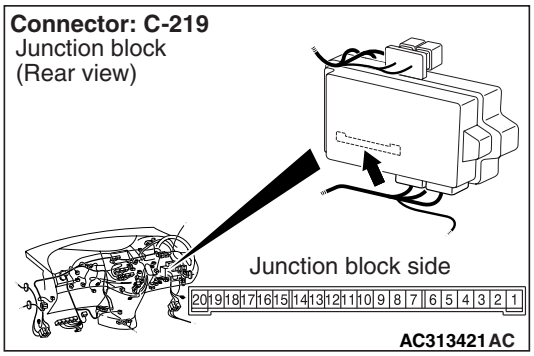


**Q: Is the check result normal?**
**YES :** Go to Step 2.
**NO :** Repair the defective connector.

### Step 2. Voltage measurement at the C-219 ETACS-ECU connector.

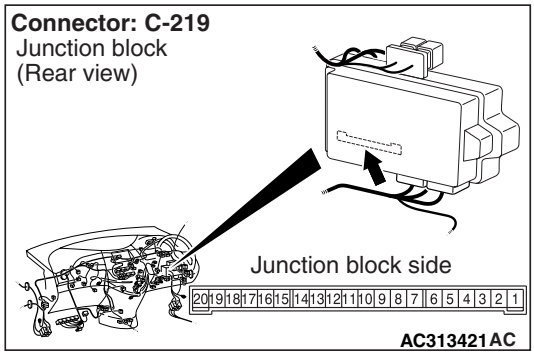


(1) Remove the ETACS-ECU, and measure at the junction block side.

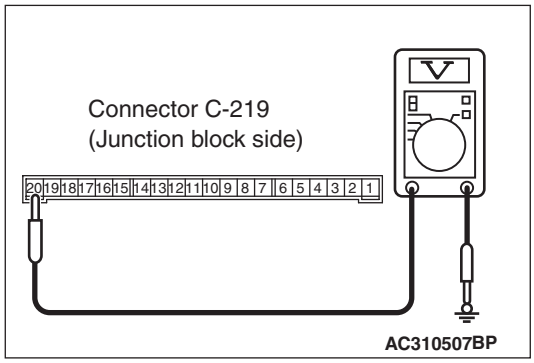


(2) Voltage between C-219 ETACS-ECU connector terminal No.20 and body earth

**OK: System voltage**

**Q: Is the check result normal?**
**YES :** Go to Step 4.
**NO :** Go to Step 3.

Main Index
Group TOC

**Step 3. Check the wiring harness between C-219 ETACS-ECU connector terminal No.20 to fusible link (26).**

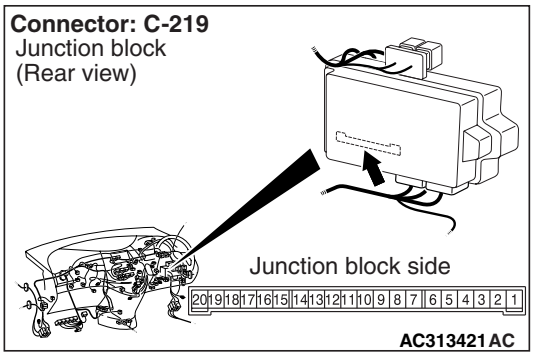


*NOTE:*

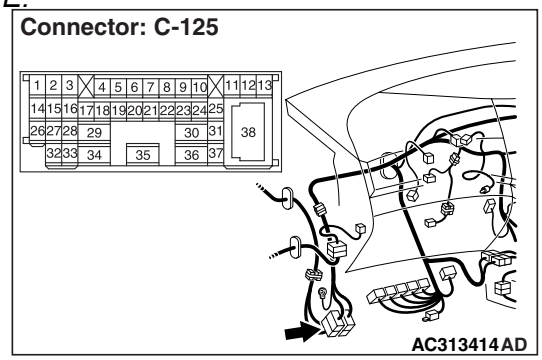


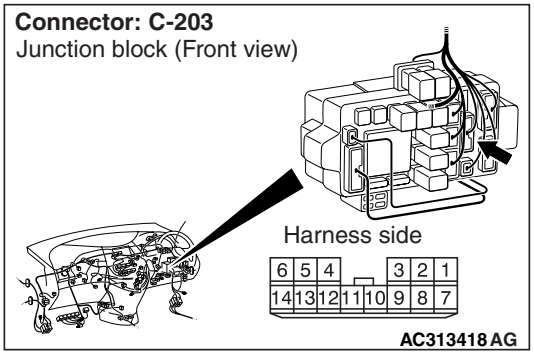


*Prior to the wiring harness inspection, check intermediate connector C-125 and junction block connector C-203, and repair if necessary.*

- Check the power supply line for open circuit.

**Q: Is the check result normal?**

**YES :** The trouble can be an intermittent malfunction (Refer to GROUP 00 – How to Cope with Intermittent Malfunction P.00-5).

**NO :** Repair the wiring harness.

**Step 4. Resistance measurement at the C-219 ETACS-ECU connector.**

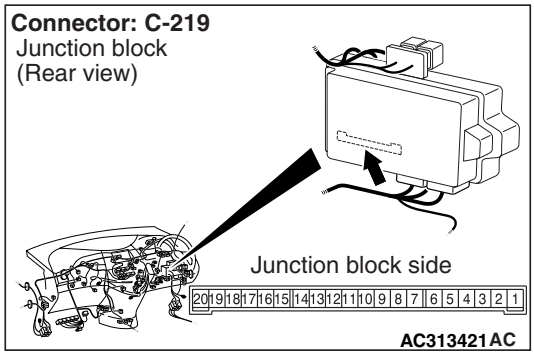


(1) Remove the ETACS-ECU, and measure at the junction block side.

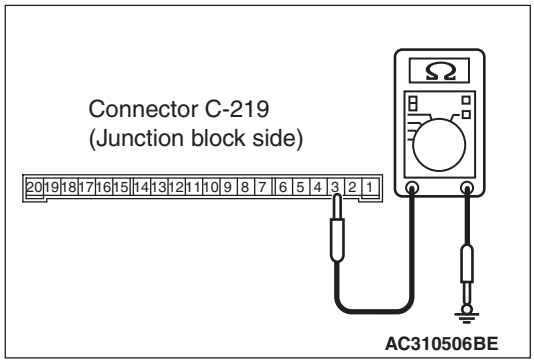


(2) Resistance between C-219 ETACS-ECU connector terminal No.3 and body earth

**OK: 2 Ω or less**

**Q: Is the check result normal?**

**YES :** Go to Step 6.

**NO :** Go to Step 5.

Main Index
Group TOC

**Step 5. Check the wiring harness between C-219 ETACS-ECU connector terminal No.3 to body earth.**

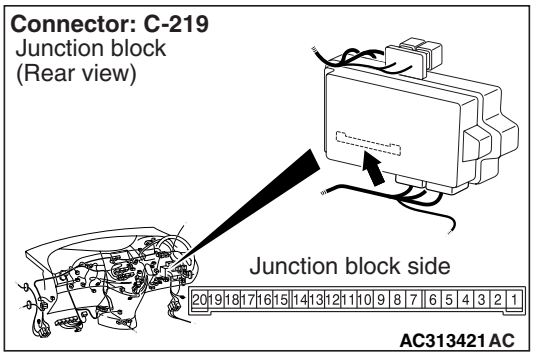


*NOTE:*

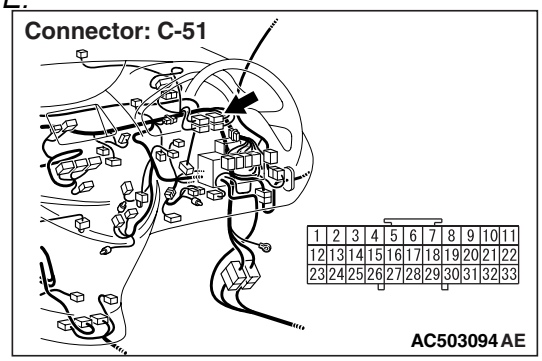


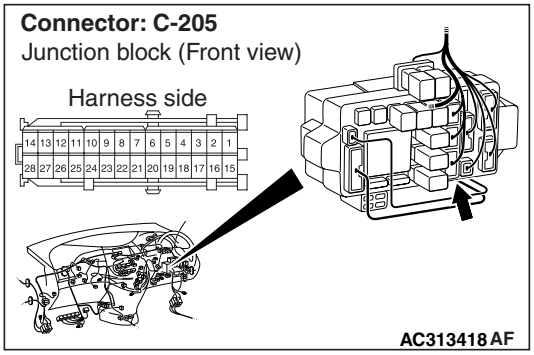


*Prior to the wiring harness inspection, check junction block connector C-205 and joint connector C-51, and repair if necessary.*

- Check the earth wires for open circuit.

**Q: Is the check result normal?**

**YES :** The trouble can be an intermittent malfunction (Refer to GROUP 00 – How to Cope with Intermittent Malfunction P.00-5).

**NO :** Repair the wiring harness.

**Step 6. Connector check: C-221 ETACS-ECU connector and C-301 column switch connector**

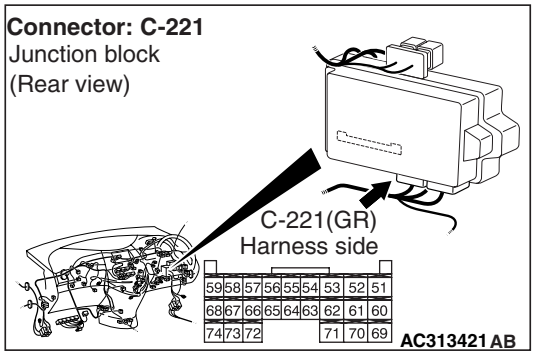


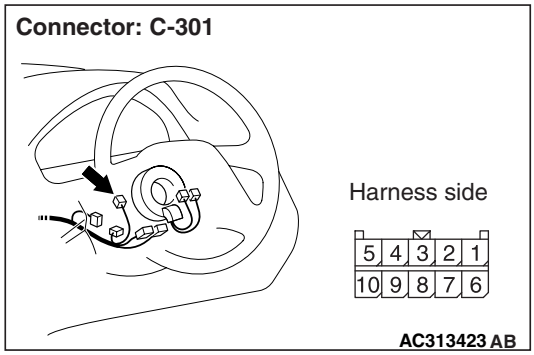


**Q: Is the check result normal?**

**YES :** Go to Step 7.

**NO :** Repair the defective connector.

Main Index
Group TOC

**Step 7. Check the wiring harness from C-221 ETACS-ECU connector terminal Nos. 59 and 68 to C-301 column switch connector terminal Nos. 3 and 2.**

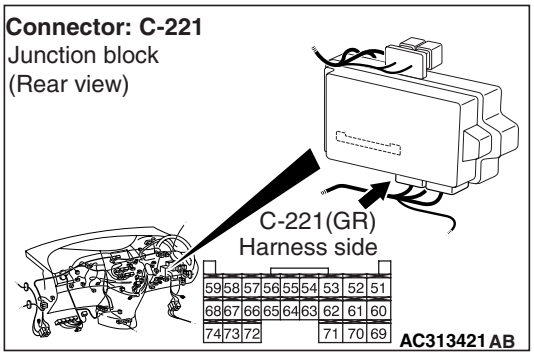


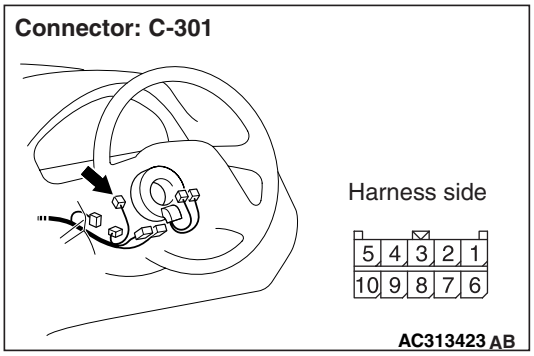


*NOTE:*

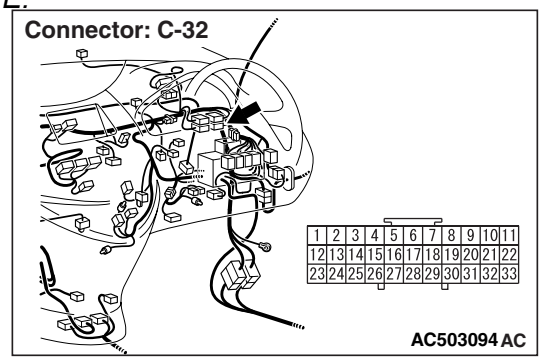


*Prior to the wiring harness inspection, check joint connector C-32, and repair if necessary.*

- Check the communication lines for open circuit.

**Q: Is the check result normal?**

**YES :** Go to Step 8.

**NO :** Repair the wiring harness.

**Step 8. ECU check by using the SWS monitor**

- Ignition switch: OFF

**ECUS TO BE CHECKED**

- ETACS ECU

**OK: "OK" is displayed on the "ETACS ECU" menu.**

**Q: Is the check result normal?**

**YES :** The trouble can be an intermittent malfunction (Refer to GROUP 00 – How to Cope with Intermittent Malfunction P.00-5).

**NO :** Replace the ETACS-ECU.

Main Index
Group TOC

## INSPECTION PROCEDURE A-4: Communication with the front-ECU is not possible.

**⚠ CAUTION**

**Whenever the ECU is replaced, ensure that the power supply circuit, the earthing circuit and the communication circuit are normal.**

**Front-ECU Power Supply and SWS Communication Circuit**

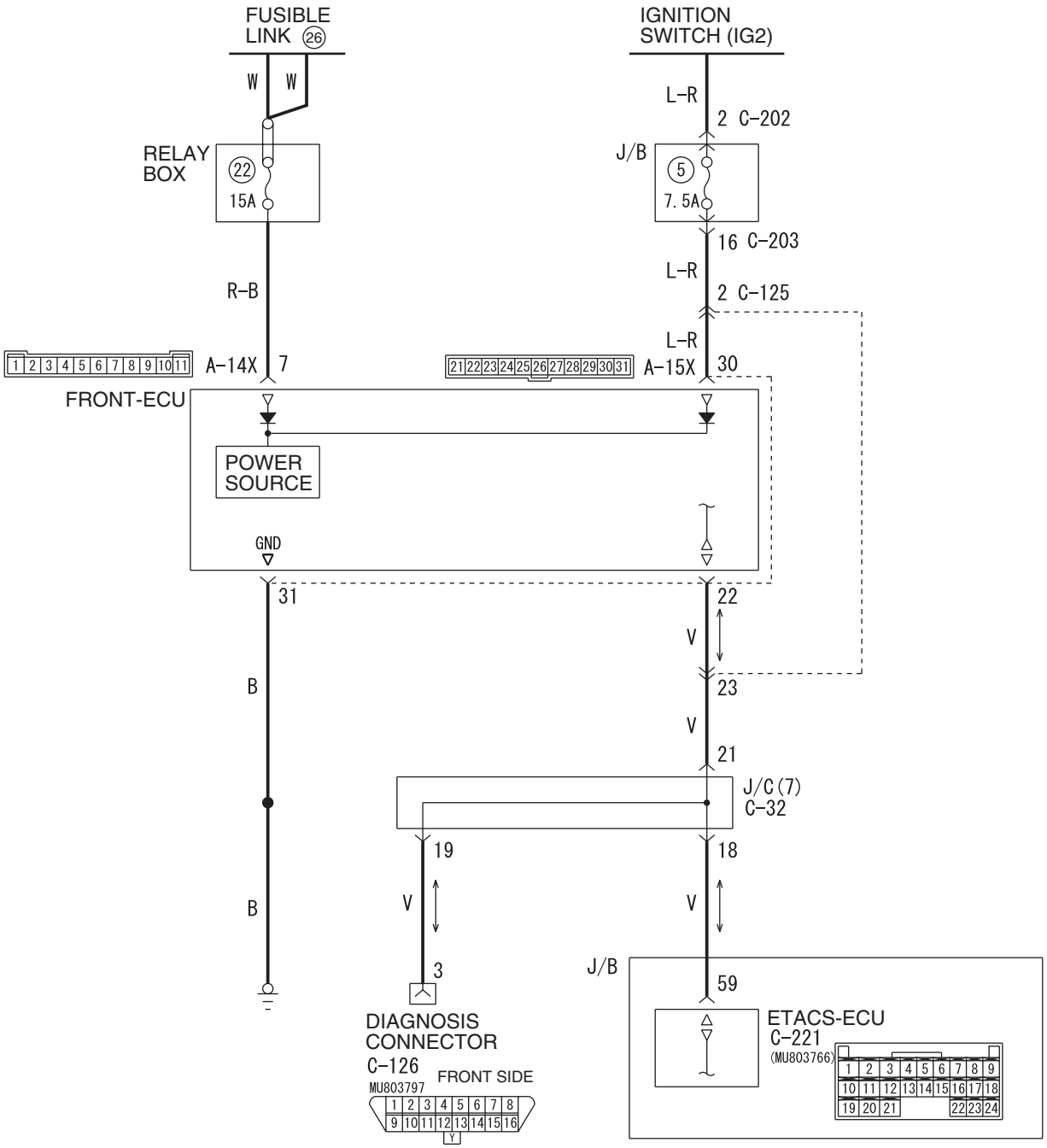


Wire colour code
B : Black LG : Light green G : Green L : Blue W : White Y : Yellow SB : Sky blue
BR : Brown O : Orange GR : Grey R : Red P : Pink V : Violet PU : Purple

W6X54X071A

Main Index
Group TOC

## COMMENTS ON TROUBLE SYMPTOM

It is suspected that the power supply circuit to the front-ECU is defective, or the wiring harness between the SWS monitor and the front-ECU or their connector(s) is damaged. If the battery power supply circuit to the ECU (terminal No.7 of the front-ECU) is damaged, also check the power supply circuit from the ignition switch (IG2) (terminal No.30 of the front-ECU), and repair if necessary.

## POSSIBLE CAUSES

- Malfunction of the front-ECU
- Malfunction of the ETACS-ECU
- Damaged harness wires and connectors

## DIAGNOSIS PROCEDURE

### Step 1. ECU check by using the SWS monitor

Check that the power supply and earth lines to the ETACS-ECU and the SWS communication lines are normal.

- Ignition switch: OFF

**ECUS TO BE CHECKED**

- ETACS ECU

  **OK: "OK" is displayed on the "ETACS ECU" menu.**

**Q: Is the check result normal?**

**YES :** Go to Step 2.

**NO :** Refer to Inspection Procedure A-3 "Communication with the ETACS-ECU is not possible P.54E-55."

### Step 2. Connector check: A-14X front-ECU connector

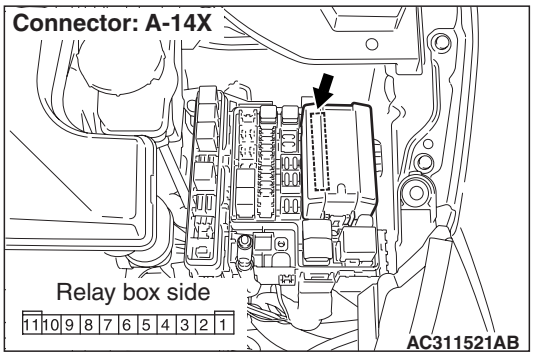


**Q: Is the check result normal?**

**YES :** Go to Step 3.

**NO :** Repair the defective connector.

### Step 3. Voltage measurement at the A-14X front-ECU connector.

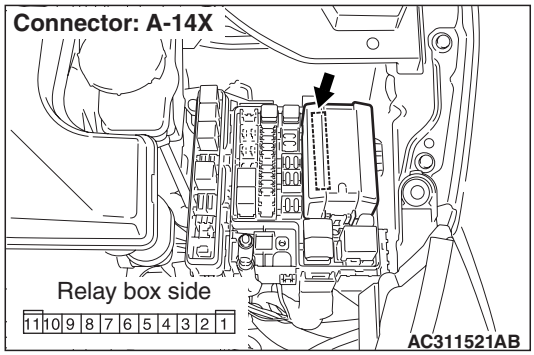


(1) Disconnect the connector, and measure at the relay box side.

(2) Ignition switch: ON

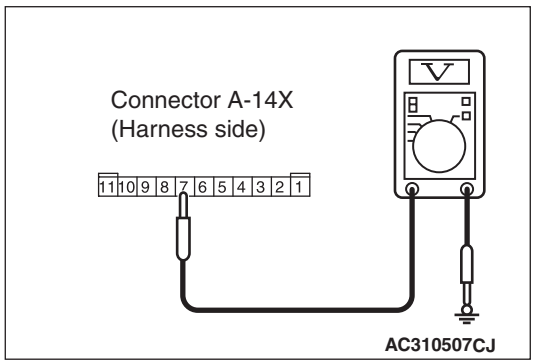


(3) Voltage between A-14X front-ECU connector No.7 and body earth

**OK: System voltage**

**Q: Is the check result normal?**

**YES :** Go to Step 5.

**NO :** Go to Step 4.

### Step 4. Check the wiring harness between A-14X front-ECU connector terminal No.7 to the fusible link (26).

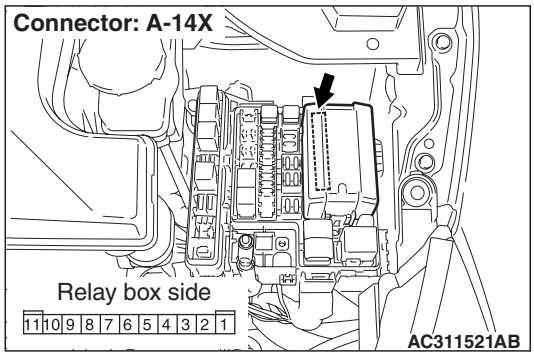


- Check the power supply line for open circuit.

Main Index
Group TOC

**Q: Is the check result normal?**
**YES :** The trouble can be an intermittent malfunction (Refer to GROUP 00 – How to Cope with Intermittent Malfunction P.00-5).
**NO :** Repair the wiring harness.

### Step 5. Connector check: A-15X front-ECU connector

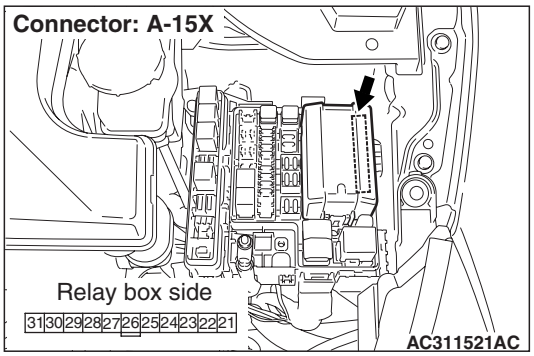


**Q: Is the check result normal?**
**YES :** Go to Step 6.
**NO :** Repair the defective connector.

### Step 6. Resistance measurement at the A-15X front-ECU connector.

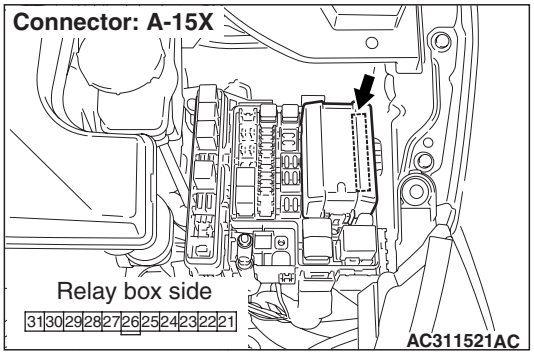


(1) Disconnect the connector, and measure at the relay box side.

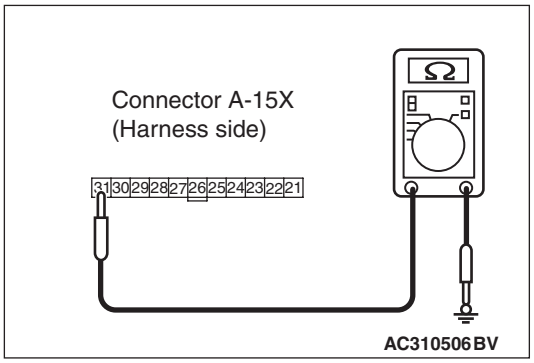


(2) Resistance between A-15X front-ECU connector terminal No.31 and body earth

**OK: 2 Ω or less**

**Q: Is the check result normal?**
**YES :** Go to Step 8.
**NO :** Go to Step 7.

### Step 7. Check the wiring harness between A-15X front-ECU terminal connector terminal No.31 to body earth.

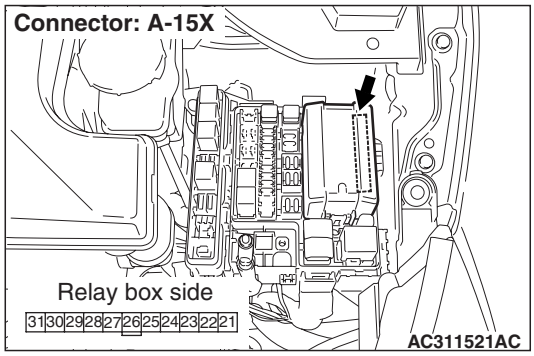


- Check the earth wires for open circuit.

**Q: Is the check result normal?**
**YES :** The trouble can be an intermittent malfunction (Refer to GROUP 00 – How to Cope with Intermittent Malfunction P.00-5).
**NO :** Repair the wiring harness.

### Step 8. Connector check: C-221 ETACS-ECU connector

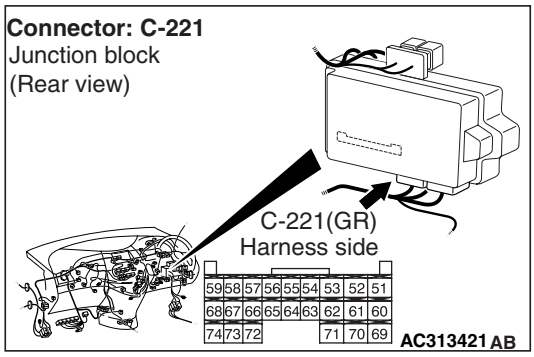


**Q: Is the check result normal?**
**YES :** Go to Step 9.
**NO :** Repair the defective connector.

Main Index
Group TOC

**Step 9. Check the wiring harness between A-15X front-ECU connector terminal No.22 to C-221 ETACS-ECU connector terminal No.59.**

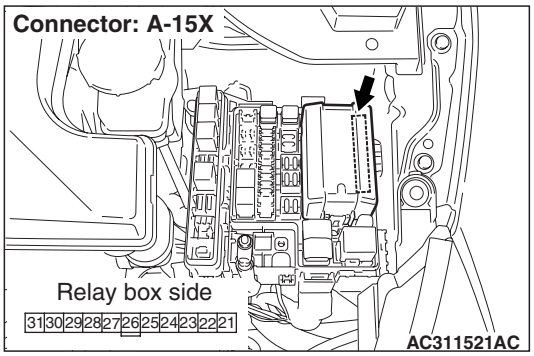


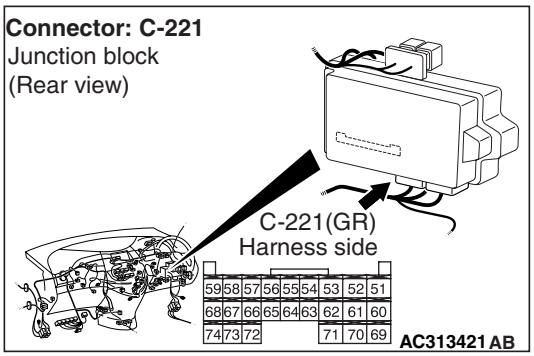


*NOTE:*

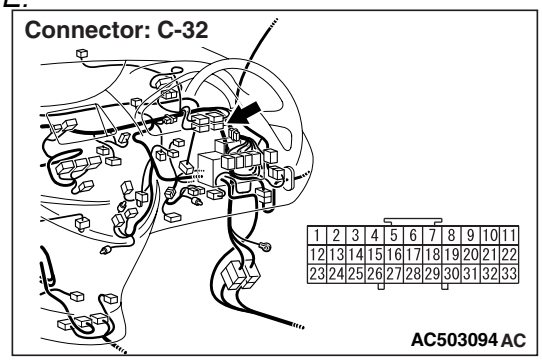


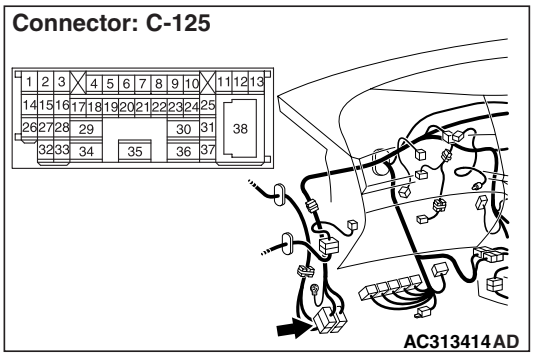


*Prior to the wiring harness inspection, check joint connector C-32 and intermediate connector C-125, and repair if necessary.*

- Check the communication lines for open circuit.

**Q: Is the check result normal?**

**YES :** Go to Step 10.

**NO :** Repair the wiring harness.

**Step 10. ECU check by using the SWS monitor**

Check that the power supply and earth lines to the front-ECU and the SWS communication lines are normal.

- Ignition switch: ON

**ECUS TO BE CHECKED**

- FRONT ECU

  **OK: "OK" is displayed on the "FRONT ECU" menu.**

**Q: Is the check result normal?**

**YES :** The trouble can be an intermittent malfunction (Refer to GROUP 00 – How to Cope with Intermittent Malfunction P.00-5).

**NO :** Replace the front-ECU.

Main Index
Group TOC

## INSPECTION PROCEDURE A-5: Communication with the power window main switch (power window module) is not possible.

**⚠ CAUTION**

**Whenever the ECU is replaced, ensure that the power supply circuit, the earthing circuit and the communication circuit are normal.**

**Power Window Main Switch and SWS Communication Circuit**

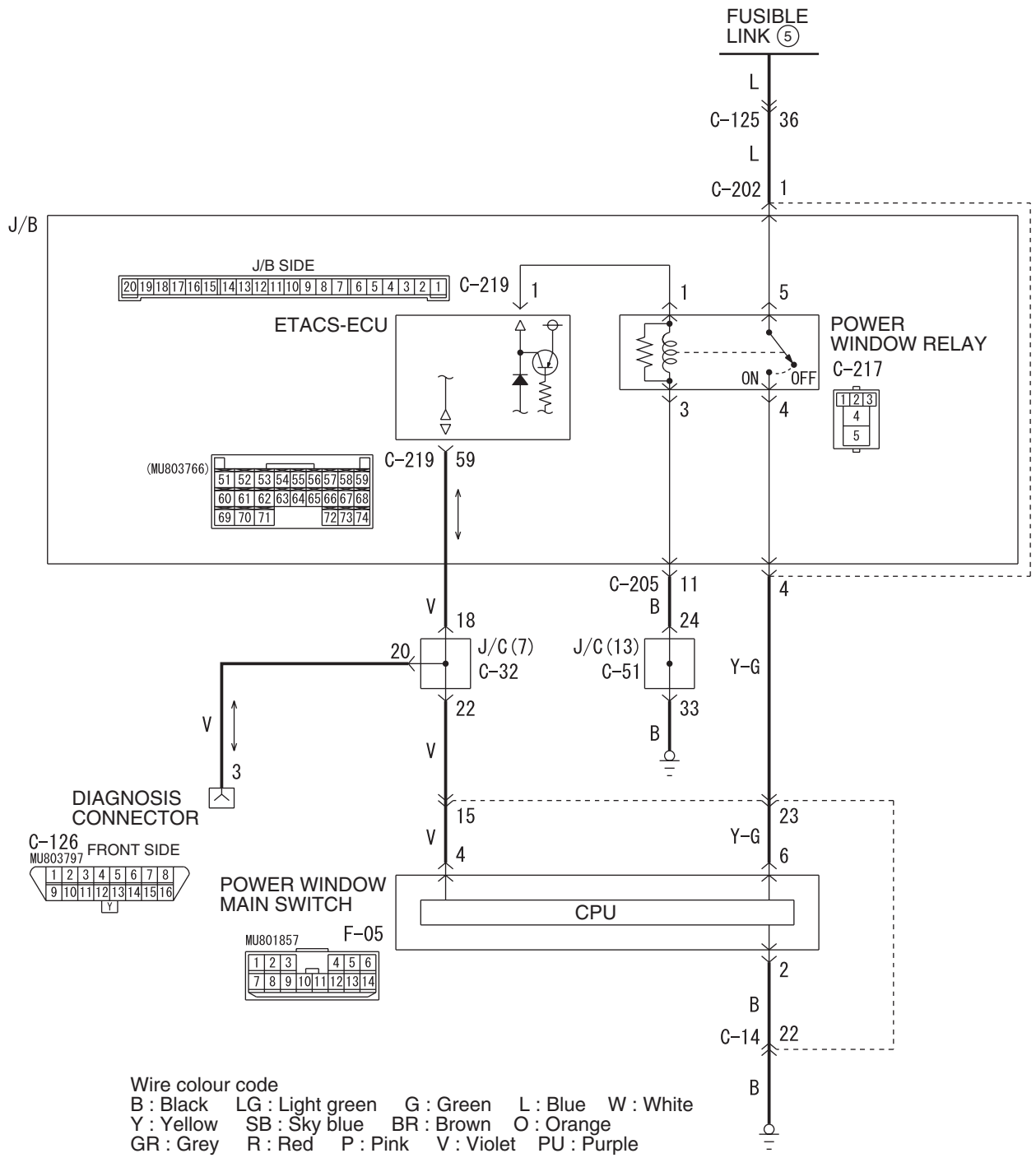

Main Index
Group TOC

## COMMENTS ON TROUBLE SYMPTOM

The power window main switch, the power supply circuit (power window relay driving circuit) or communication circuit for that switch may be defective.

## POSSIBLE CAUSES

- Malfunction of the power window main switch
- Malfunction of the power window relay
- Malfunction of the ETACS-ECU
- Damaged harness wires and connectors

## DIAGNOSIS PROCEDURE

**Step 1. ECU check by using the SWS monitor**

Check that the power supply and earth lines to the ETACS-ECU and the SWS communication lines are normal.

- Ignition switch: OFF

**ECUS TO BE CHECKED**

- ETACS ECU

**OK: "OK" is displayed on the "ETACS ECU" menu.**

**Q: Is the check result normal?**

**YES :** Go to Step 2.

**NO :** Refer to Inspection Procedure A-3 "Communication with the ETACS-ECU is not possible P.54E-55."

**Step 2. SWS monitor data list**

**<Selected item> ETACS ECU**

- Ignition switch: ON

| Item No. | Item name | Normal condition |
|---|---|---|
| Item 30 | IG SW(IG1) | ON |

**OK: Normal condition is displayed.**

**Q: Is the check result normal?**

**YES :** Go to Step 3.

**NO :** Refer to inspection procedure P-2 "The ignition switch (IG1) signal is not received P.54E-293."

**Step 3. Connector check: F-05 power window main switch connector.**

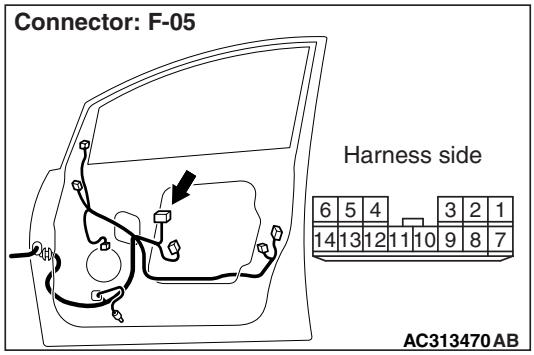


**Q: Is the check result normal?**

**YES :** Go to Step 4.

**NO :** Repair the defective connector.

**Step 4. Voltage measurement at the F-05 power window main switch connector.**

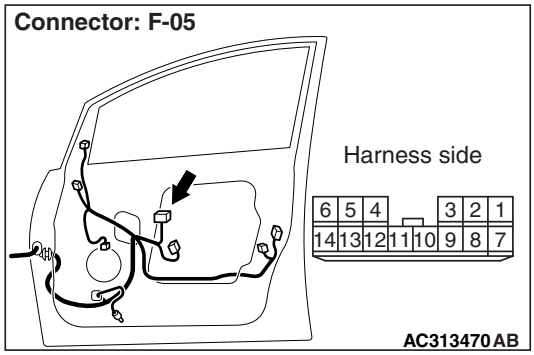


(1) Disconnect the connector, and measure at the wiring harness side.

(2) Ignition switch: ON

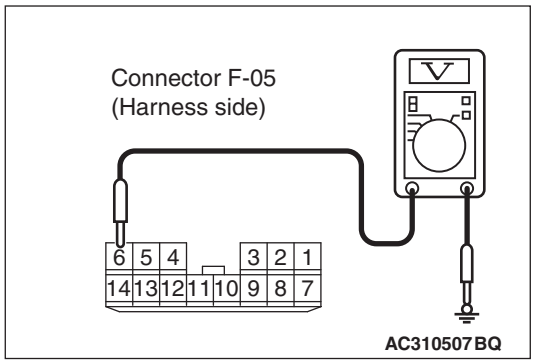


(3) Voltage between F-05 power window main switch connector terminal No.6 and body earth.

**OK: System voltage**

**Q: Is the check result normal?**

**YES :** Go to Step 13.

**NO :** Go to Step 5.

Main Index
Group TOC

**Step 5. Connector check: C-217 power window relay connector.**

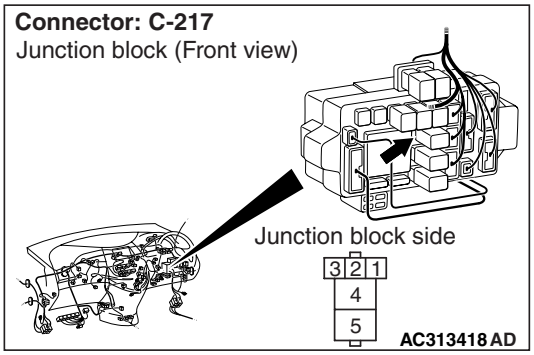


**Q: Is the check result normal?**
**YES :** Go to Step 6.
**NO :** Repair the defective connector.

**Step 6. Check the power window relay.**
Refer to GROUP 42 – Door P.42-32.

**Q: Is the check result normal?**
**YES :** Go to Step 7.
**NO :** Replace the power window relay.

**Step 7. Voltage measurement at the C-217 power window relay connector.**

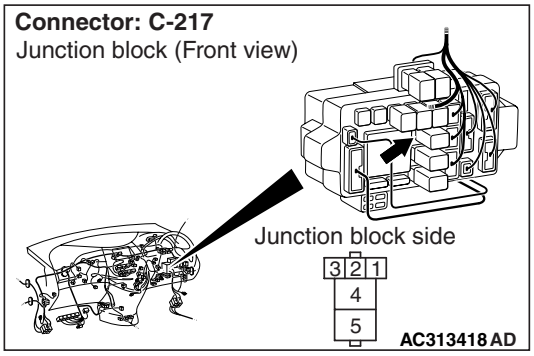


(1) Remove the power window relay, and measure at the junction block side.

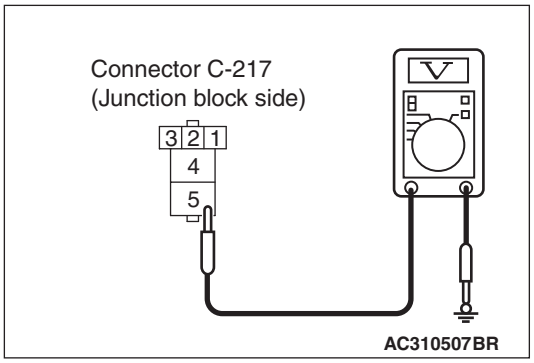


(2) Voltage between C-217 power window relay connector terminal No.5 and body earth.

**OK: System voltage**

**Q: Is the check result normal?**
**YES :** Go to Step 9.
**NO :** Go to Step 8.

**Step 8. Check the wiring harness between C-217 power window relay connector terminal No.5 to fusible link (5).**

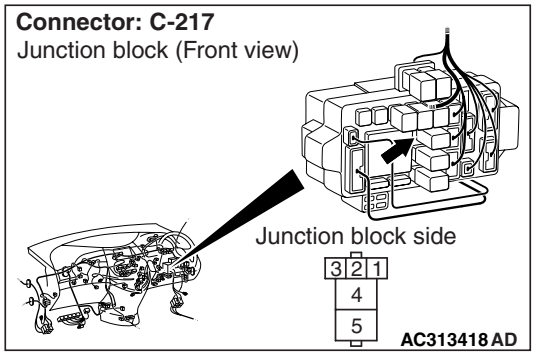


*NOTE:*

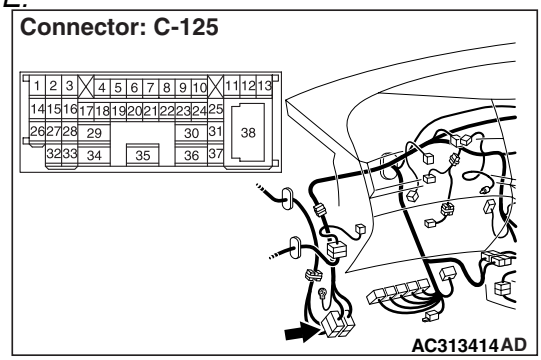


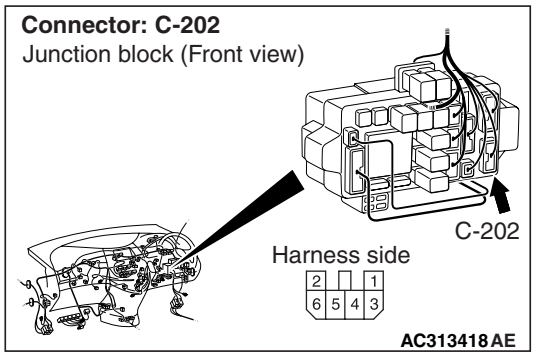


*Prior to the wiring harness inspection, check intermediate connectors C-125 and junction block connector C-202, and repair if necessary.*

- Check the power supply line for open circuit.

**Q: Is the check result normal?**
**YES :** The trouble can be an intermittent malfunction (Refer to GROUP 00 – How to Cope with Intermittent Malfunction P.00-5).
**NO :** Repair the wiring harness.

Main Index
Group TOC

### Step 9. Resistance measurement at the C-217 power window relay connector.

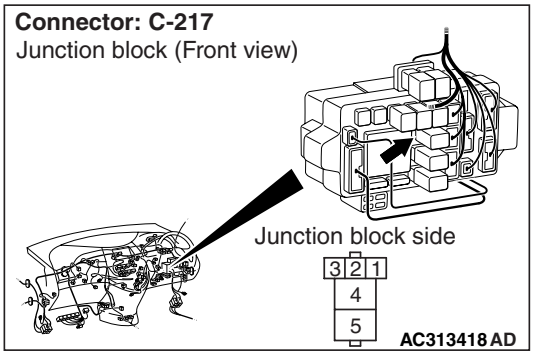


(1) Remove the power window relay, and measure at the junction block side.

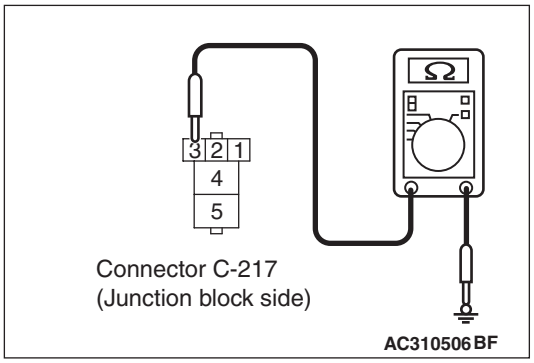


(2) Resistance between C-217 power window relay connector terminal No.3 and body earth.

**OK: 2 Ω or less**

**Q: Is the check result normal?**
**YES :** Go to Step 11.
**NO :** Go to Step 10.

### Step 10. Check the wiring harness between C-217 power window relay connector terminal No.3 to body earth.

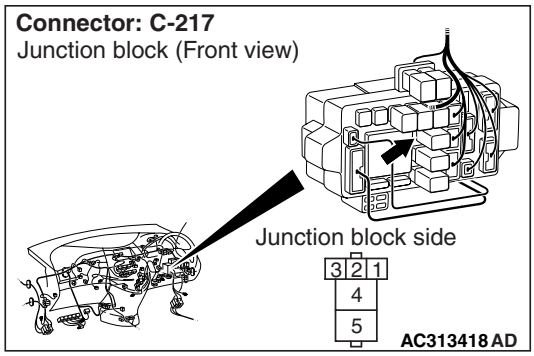


*NOTE:*

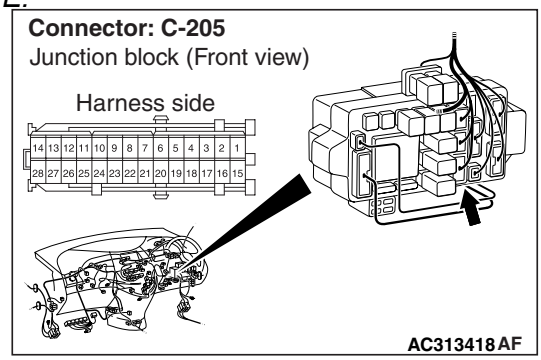


*Prior to the wiring harness inspection, check junction block connector C-205 and joint connector C-51, and repair if necessary.*

- Check the earth wires for open circuit.

**Q: Is the check result normal?**
**YES :** The trouble can be an intermittent malfunction (Refer to GROUP 00 – How to Cope with Intermittent Malfunction P.00-5).
**NO :** Repair the wiring harness.

### Step 11. Connector check: C-219 ETACS-ECU connector.

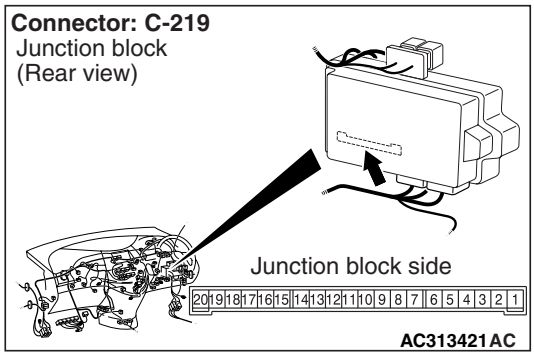


**Q: Is the check result normal?**
**YES :** Go to Step 12.
**NO :** Repair the defective connector.

Main Index
Group TOC

**Step 12. Check the wiring harness between C-217 power window relay connector terminal No.4 to F-05 power window main switch connector terminal No.6.**

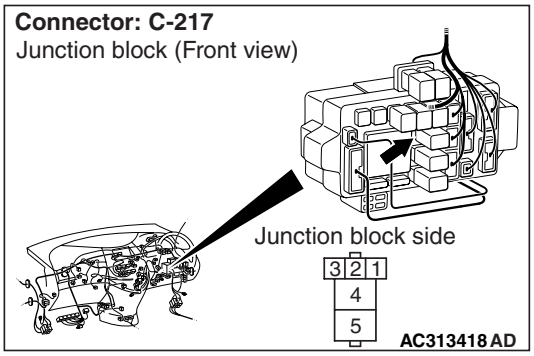


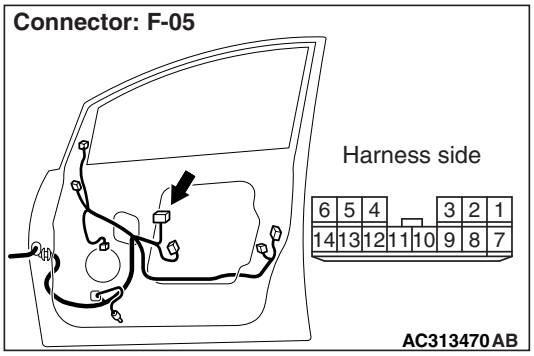


*NOTE:*

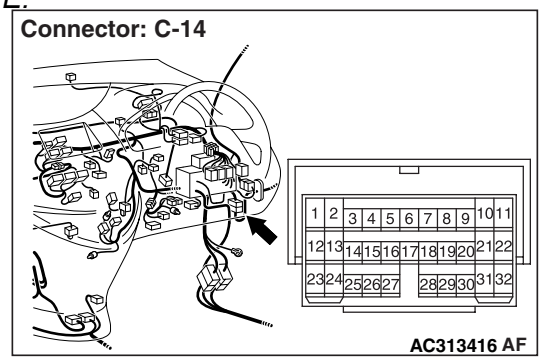


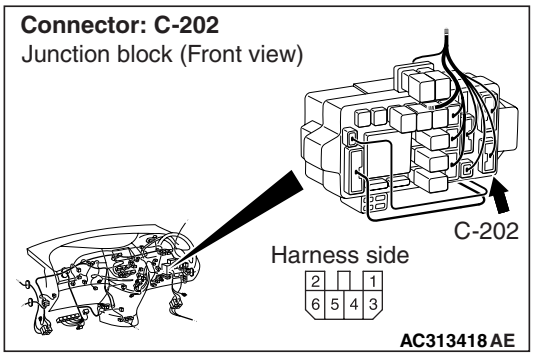


*Prior to the wiring harness inspection, check intermediate connectors C-14 and junction block connector C-202, and repair if necessary.*

- Check the power supply line for open circuit.

**Q: Is the check result normal?**

**YES :** The trouble can be an intermittent malfunction (Refer to GROUP 00 – How to Cope with Intermittent Malfunction P.00-5).

**NO :** Repair the wiring harness.

**Step 13. Resistance measurement at the F-05 power window main switch connector.**

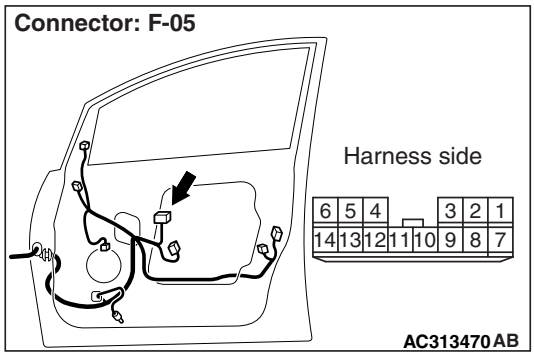


(1) Disconnect the connector, and measure at the wiring harness side.

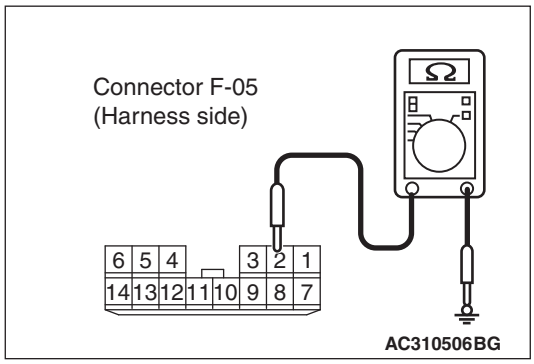


(2) Resistance between F-05 power window main switch connector terminal No.2 and body earth.

**OK: 2 Ω or less**

**Q: Is the check result normal?**

**YES :** Go to Step 15.

**NO :** Go to Step 14.

**Step 14. Check the wiring harness between F-05 power window main switch connector terminal No.2 to body earth.**

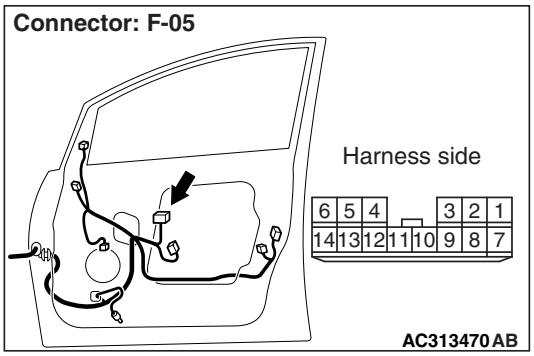


*NOTE:*

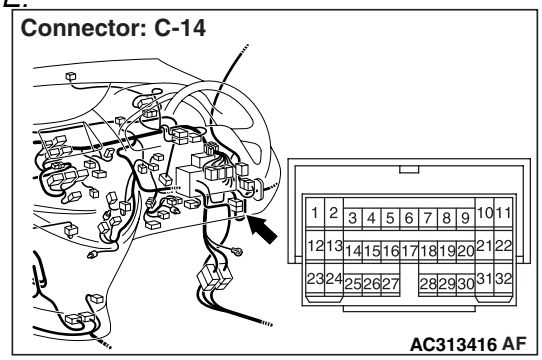


*Prior to the wiring harness inspection, check intermediate connectors C-14, and repair if necessary.*

- Check the earth wires for open circuit.

**Q: Is the check result normal?**

**YES :** The trouble can be an intermittent malfunction (Refer to GROUP 00 – How to Cope with Intermittent Malfunction P.00-5).

**NO :** Repair the wiring harness.

**Step 15. Connector check: C-221 ETACS-ECU connector.**

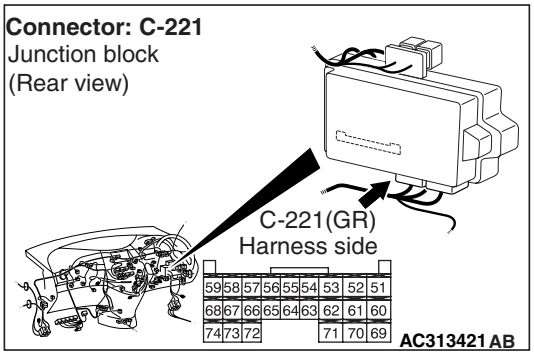


**Q: Is the check result normal?**

**YES :** Go to Step 16.

**NO :** Repair the defective connector.

**Step 16. Check the wiring harness between C-221 ETACS-ECU connector terminal No.59 to F-05 power window main switch connector terminal No.4.**

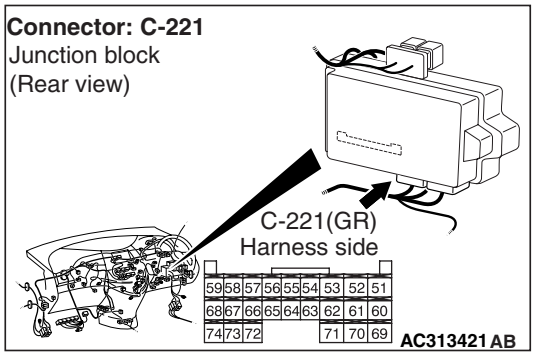


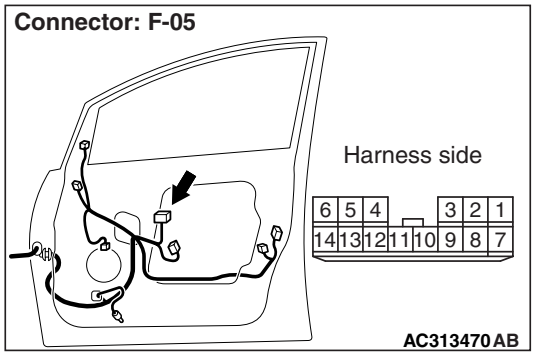


*NOTE:*

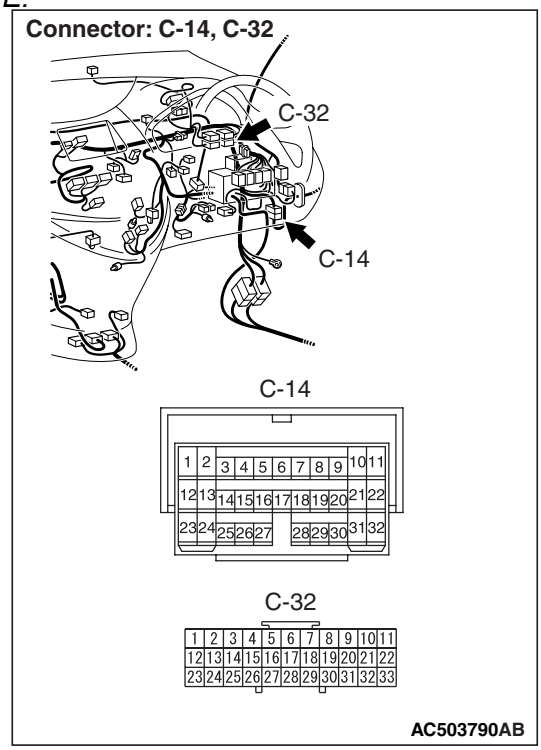


*Prior to the wiring harness inspection, check intermediate connectors C-14 and joint connector C-32, and repair if necessary.*

- Check the communication lines for open circuit.

Main Index
Group TOC

**Q: Is the check result normal?**
**YES :** Go to Step 17.
**NO :** Repair the wiring harness.

---

**Step 17. ECU check by using the SWS monitor.**
Check that the power supply and earth lines to the power window main switch (power window module) and the SWS communication lines are normal.

- Ignition switch: ON

**ECUS TO BE CHECKED**

- P/W MODULE

**OK: "OK" is displayed on the "P/W MODULE" menu.**

**Q: Is the check result normal?**
**YES : .** The trouble can be an intermittent malfunction (Refer to GROUP 00 – How to Cope with Intermittent Malfunction P.00-5).
**NO :** Replace the power window main switch.

Main Index
Group TOC

## INSPECTION PROCEDURE A-6: Communication with the sunroof motor assembly (sunroof-ECU) is not possible.

**⚠ CAUTION**

**Whenever the ECU is replaced, ensure that the power supply circuit, the grounding circuit and the communication circuit are normal.**

**Sunroof Motor Assembly and SWS Communication Circuit**

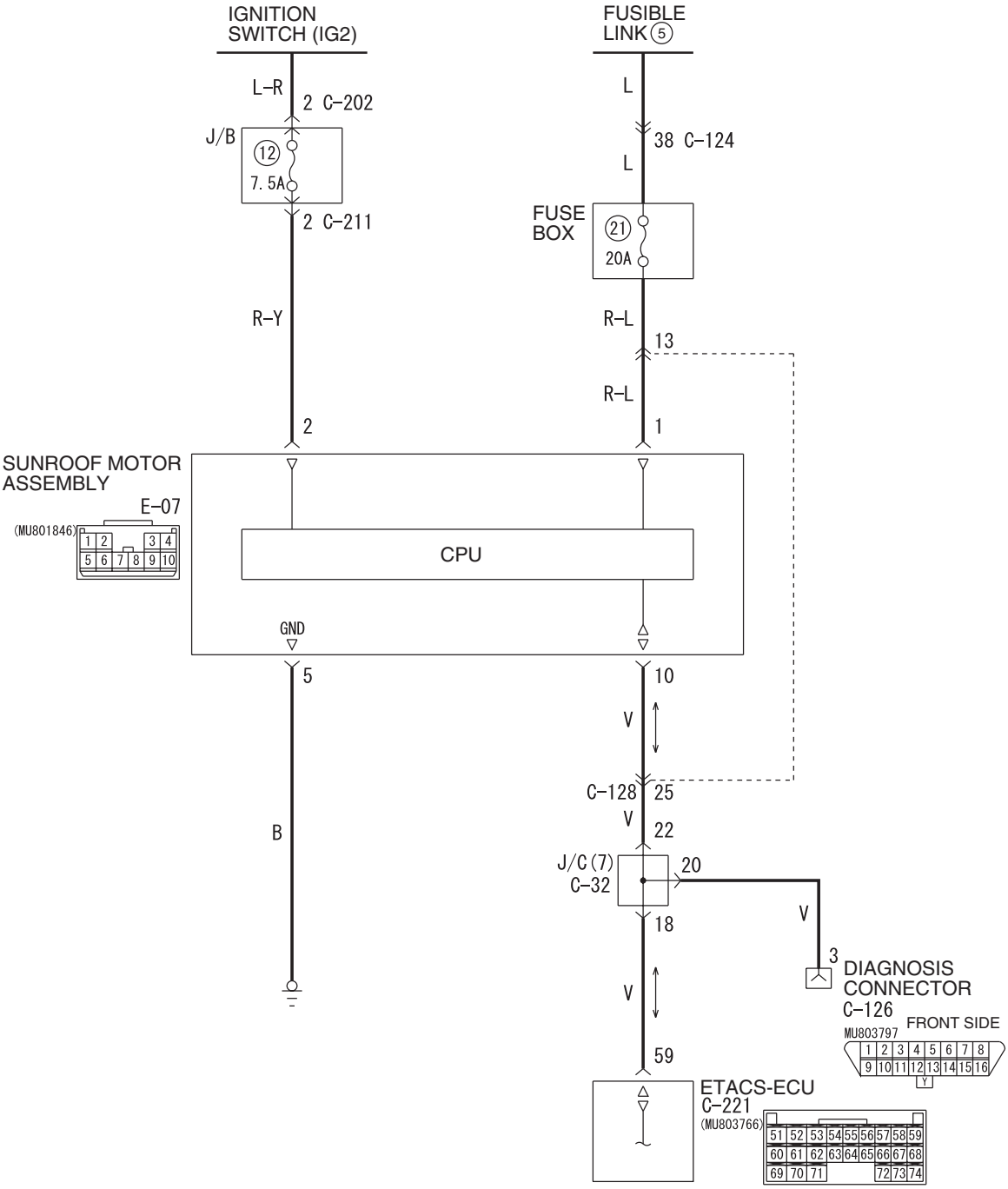


Wire colour code
B : Black LG : Light green G : Green L : Blue W : White Y : Yellow SB : Sky blue
BR : Brown O : Orange GR : Grey R : Red P : Pink V : Violet PU : Purple

W6X54X073A

Main Index
Group TOC

## COMMENTS ON TROUBLE SYMPTOM

The sunroof motor assembly, the power supply circuit or the communication circuit for that assembly may be defective.

## POSSIBLE CAUSES

- Malfunction of the sunroof motor assembly
- Damaged harness wires and connectors

## DIAGNOSIS PROCEDURE

**Step 1. ECU check on the SWS monitor**

Check that the power supply and earth lines to the ETACS-ECU and the SWS communication lines are normal.

- Ignition switch: OFF

**ECUS TO BE CHECKED**

- ETACS

  **OK: "OK" is displayed on the "ETACS ECU" menu.**

**Q: Is the check result normal?**

**YES :** Go to Step 2.

**NO :** Refer to Inspection Procedure A-3 "Communication with the ETACS-ECU is not possible P.54E-55."

**Step 2. Connector check: E-07 sunroof motor assembly connector**

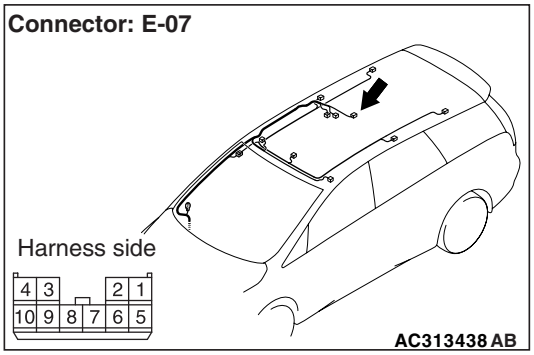


**Q: Is the check result normal?**

**YES :** Go to Step 3.

**NO :** Repair the defective connector.

**Step 3. Voltage measurement at the E-07 sunroof motor assembly connector.**

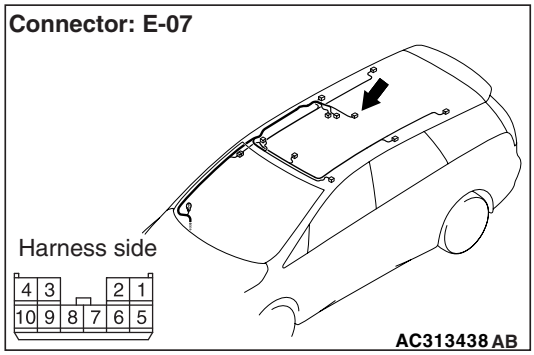


(1) Disconnect the connector, and measure at the wiring harness side.

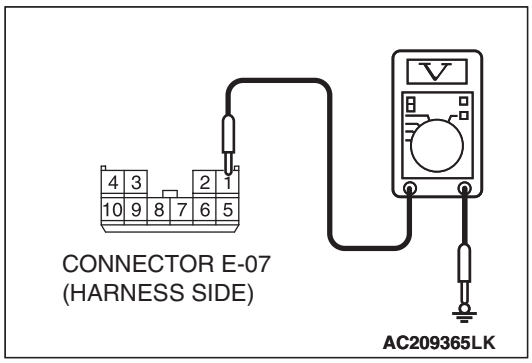


(2) Voltage between E-07 sunroof motor assembly connector terminal No.1 and body earth

**OK: System voltage**

**Q: Is the check result normal?**

**YES :** Go to Step 5.

**NO :** Go to Step 4.

Main Index
Group TOC

**Step 4. Check the wiring harness between E-07 sunroof motor assembly connector terminal No.1 to fusible link (5).**

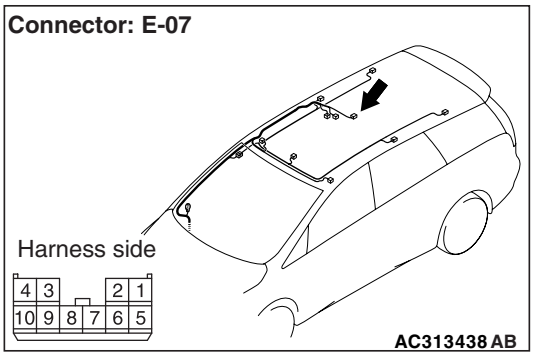


*NOTE:*

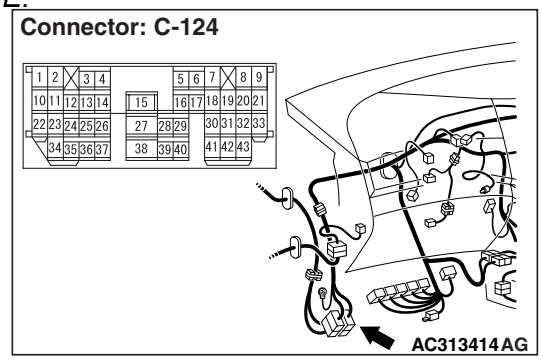


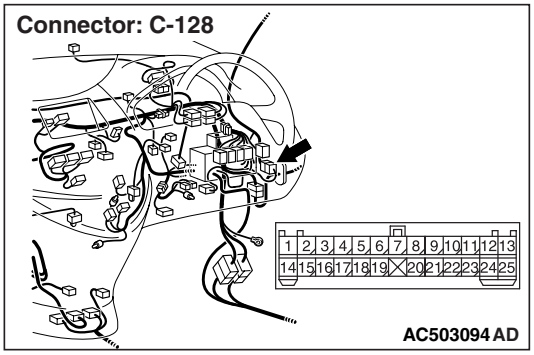


*Prior to the wiring harness inspection, check intermediate connectors C-124, C-128, and repair if necessary.*

- Check the power supply line for open circuit.

**Q: Is the check result normal?**

**YES :** The trouble can be an intermittent malfunction (Refer to GROUP 00 – How to Cope with Intermittent Malfunction P.00-5).

**NO :** Repair the wiring harness.

**Step 5. Voltage measurement at the E-07 sunroof motor assembly connector.**

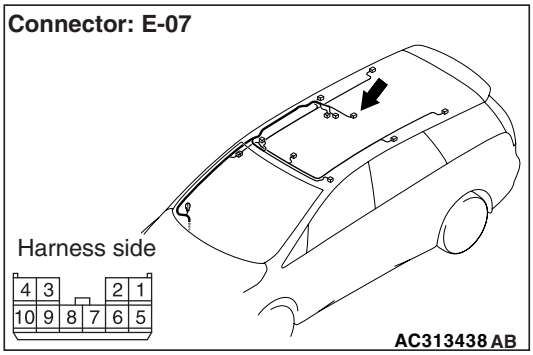


(1) Disconnect the connector, and measure at the wiring harness side.

(2) Turn the ignition switch to the ON position.

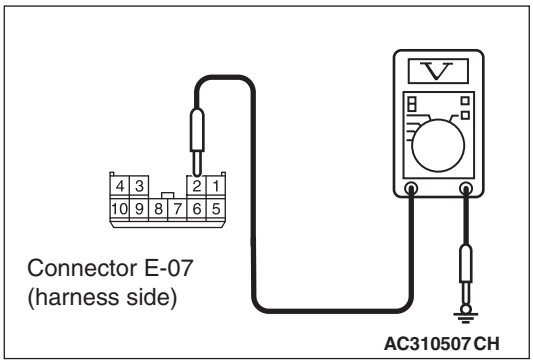


(3) Voltage between E-07 sunroof motor assembly connector terminal No.2 and body earth

**OK: System voltage**

**Q: Is the check result normal?**

**YES :** Go to Step 7.

**NO :** Go to Step 6.

Main Index
Group TOC

**Step 6. Check the wiring harness between E-07 sunroof motor assembly connector terminal No.2 to ignition switch (IG2).**

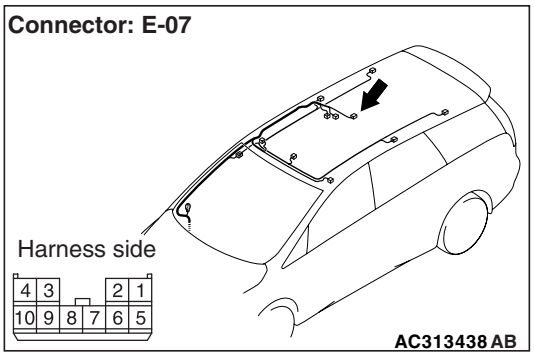


*NOTE:*

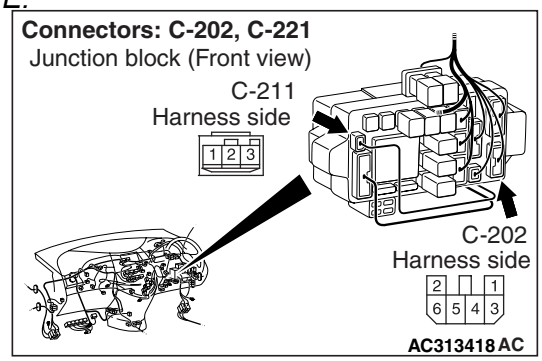


*Prior to the wiring harness inspection, check junction block connectors C-202 and C-211, and repair if necessary.*

- Check the power supply line to the ignition switch (IG2) for open circuit.

**Q: Is the check result normal?**
**YES :** The trouble can be an intermittent malfunction (Refer to GROUP 00, How to Cope with Intermittent Malfunction P.00-5).
**NO :** Repair the wiring harness.

**Step 7. Resistance measurement at the E-07 sunroof motor assembly connector.**

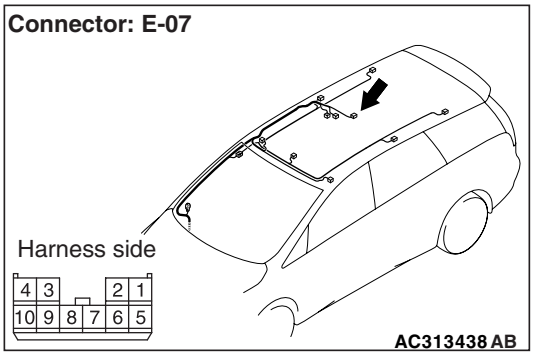


(1) Disconnect the connector, and measure at the wiring harness side.

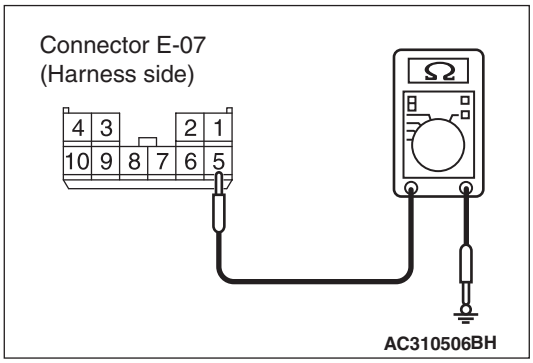


(2) Continuity between E-07 sunroof motor assembly connector terminal No.5 and body earth

**OK: 2Ω or less**

**Q: Is the check result normal?**
**YES :** Go to Step 9.
**NO :** Go to Step 8.

**Step 8. Check the wiring harness between E-07 sunroof motor assembly connector terminal No.5 to body earth.**

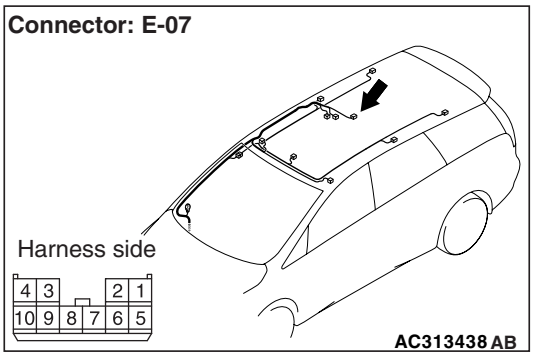


- Check the earth wires for open circuit.

**Q: Is the check result normal?**
**YES :** The trouble can be an intermittent malfunction (Refer to GROUP 00, How to Cope with Intermittent Malfunction P.00-5).
**NO :** Repair the wiring harness.

Main Index
Group TOC

### Step 9. Connector check: C-221 ETACS-ECU connector

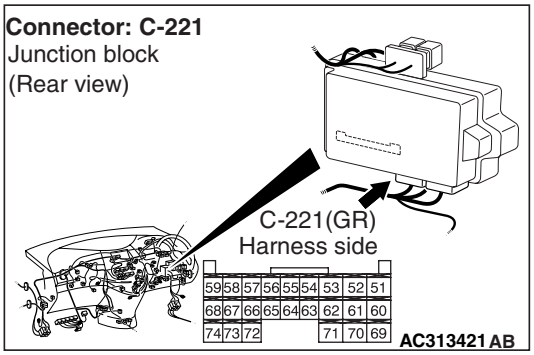


**Q: Is the check result normal?**
**YES :** Go to Step 10.
**NO :** Repair the defective connector.

### Step 10. Check the wiring harness between E-07 sunroof motor assembly connector terminal No.10 to C-221 ETACS-ECU connector terminal No.59.

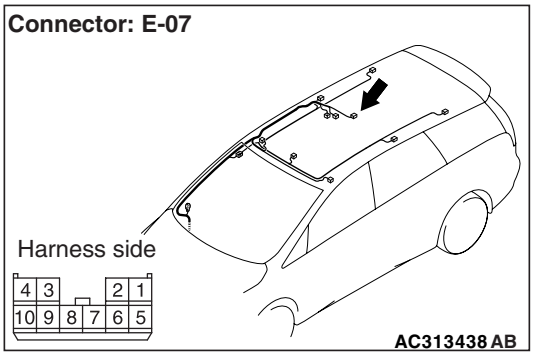


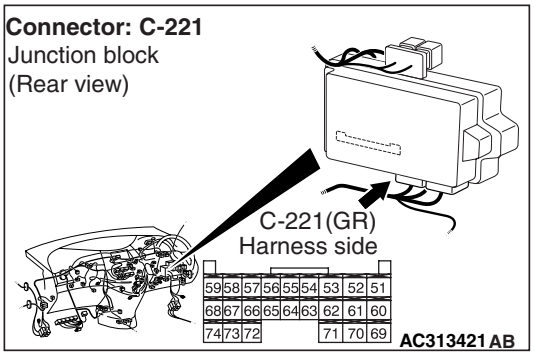


*NOTE:*

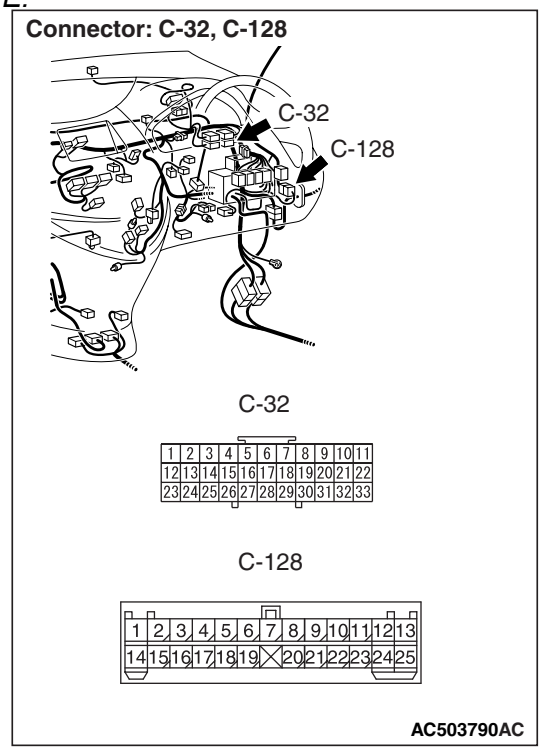


*Prior to the wiring harness inspection, check joint connector C-32 and intermediate connector C-128, and repair if necessary.*

- Check the communication lines for open circuit.

**Q: Is the check result normal?**
**YES :** Go to Step 11.
**NO :** Repair the wiring harness.

### Step 11. ECU check on the SWS monitor

Check that the power supply and earth lines to the sunroof motor assembly and the SWS communication lines are normal.

- Turn the ignition switch to the ON position.

**ECUS TO BE CHECKED**

- SUNROOF ECU

  **OK: "OK" is displayed on the "SUNROOF ECU" menu.**

**Q: Is the check result normal?**
**YES :** The trouble can be an intermittent malfunction (Refer to GROUP 00, How to Cope with Intermittent Malfunction P.00-5).
**NO :** Replace the sunroof motor assembly.

Main Index
Group TOC

# BUZZER

## INSPECTION PROCEDURE B-1: Ignition key reminder buzzer function does not work.

**⚠ CAUTION**
**Whenever the ECU is replaced, ensure that the input and output signal circuits are normal.**

**Ignition Key Reminder Buzzer**

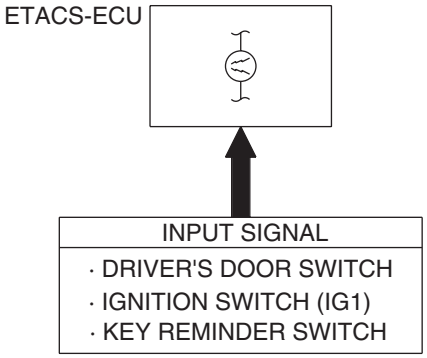


W4X54X101A

## COMMENTS ON TROUBLE SYMPTOM

If the ignition key reminder function does not work normally, the input signal circuits below or the ETACS-ECU may be defective.

- Ignition switch (IG1)
- Key reminder switch
- Front door switch (RH)

## POSSIBLE CAUSES

- Malfunction of the key reminder switch
- Malfunction of the driver's door switch
- Malfunction of the ETACS-ECU
- Damaged harness wires and connectors

## DIAGNOSIS PROCEDURE

**Step 1. ECU check by using the SWS monitor**

Check that the power supply and earth lines to the ETACS-ECU and the SWS communication lines are normal.

- Ignition switch: OFF

**ECU TO BE CHECKED**

- ETACS

  **OK: "OK" is displayed on the "ETACS ECU" menu.**

**Q: Is the check result normal?**

**YES :** Go to Step 2.
**NO :** Refer to Inspection Procedure A-3

Main Index
Group TOC

**Step 2. Function diagnosis by using the SWS monitor**

Check the SWS communication signals, which are related to the ignition key reminder function.

**<Selected item> BUZZER - KEY REMND.ALM**

- Ignition switch: OFF (key inserted)
- Driver's door: open

| Item No. | Item name | Normal condition |
|---|---|---|
| Item 30 | IG SW(IG1) | OFF |
| Item 32 | DR DOOR SW | ON |
| Item 43 | BUZZER | ON |

**OK: Normal conditions are displayed for all the items.**

**Q: Is the check result normal?**

**Normal conditions are displayed for all the items :** Replace the ETACS-ECU.

**Normal condition is not displayed for item No.30 :** Refer to inspection procedure P-2 "The ignition switch (IG1) signal is not received P.54E-293."

**Normal condition is not displayed for item No.32 :** Refer to inspection procedure P-4 "The driver's door switch signal is not received P.54E-298."

**Normal condition is not displayed for item No.43 :** Go to Step 3.

**Step 3. ETACS switch data by using the SWS monitor**

Check the ETACS communication signals, which are related to the ignition key reminder function.

- Ignition switch: OFF (key inserted)

| Item No. | Item name | Normal condition |
|---|---|---|
| Item 3 | Key reminder switch | OFF |

**OK: Normal condition is displayed.**

**Q: Is the check result normal?**

**YES :** Go to Step 4.

**NO :** Refer to inspection procedure P-10 "The key reminder switch signal is not received P.54E-310."

**Step 4. Retest the system.**

The ignition key reminder buzzer function should work normally.

**Q: Is the check result normal?**

**YES :** The trouble can be an intermittent malfunction (Refer to GROUP 00 – How to Cope with Intermittent Malfunction P.00-5).

**NO :** Replace the ETACS-ECU.

## INSPECTION PROCEDURE B-2: Lamp reminder buzzer function does not work normally.

**⚠ CAUTION**

**Whenever the ECU is replaced, ensure that the input and output signal circuits are normal.**

**Lamp Reminder Tone Alarm Function**

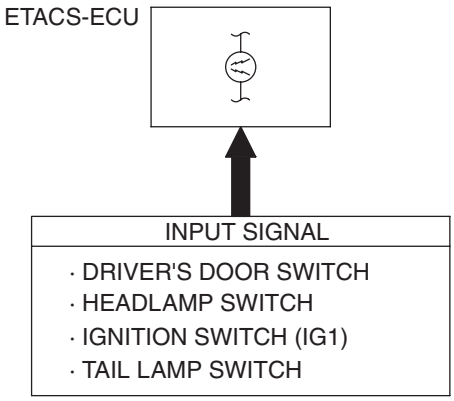


W3Z10E07AA

Main Index
Group TOC

## COMMENTS ON TROUBLE SYMPTOM

The ETACS-ECU operates this function in accordance with the input signals below.

- Ignition switch (IG1)
- Driver's door switch
- Tail lamp switch

If this function does not work normally, these input signal circuit(s) or the ETACS-ECU may be defective.

## POSSIBLE CAUSES

- Malfunction of the driver's door switch
- Malfunction of the column switch
- Malfunction of the ETACS-ECU
- Damaged harness wires and connectors

## DIAGNOSIS PROCEDURE

**Step 1. ECU check by using the SWS monitor**

Check that the power supply and earth lines to the ETACS-ECU and the column switch (column-ECU) and the SWS communication lines are normal.

- Ignition switch: OFF

**ECUS TO BE CHECKED**

- ETACS ECU
- COLUMN ECU

**OK: "OK" are displayed for all the items**

**Q: Are the check result normal?**

**"OK" is displayed for all the items :** Go to Step 2.

**"NG" is displayed on the "ETACS ECU" menu. :** Refer to Inspection Procedure A-3 "Communication with the ETACS-ECU is not possible P.54E-55."

**"NG" is displayed on the "COLUMN ECU" menu. :** Refer to Inspection Procedure A-2 "Communication with the column switch (column-ECU) is not possible P.54E-51."

**Step 2. Function diagnosis by using the SWS monitor**

Check the SWS communication signal, which are related to the lamp reminder function.

**<Selected item> BUZZER - LGT MONI. ALRM**

- Ignition switch: OFF (key removed)
- lighting switch: HEAD
- Driver's door: open

| Item No. | Item name | Normal condition |
|---|---|---|
| Item 00 | HEADLAMP SW | ON when the lighting switch is at HEAD |
| Item 01 | TAIL LAMP SW | ON when the lighting switch is at TAIL |
| Item 30 | IG SW(IG1) | OFF |
| Item 32 | DR DOOR SW | ON |
| Item 43 | BUZZER | ON |

**OK: Normal conditions are displayed for all the items.**

**Q: Are the check result normal?**

**Normal conditions are displayed for all the items :** Go to Step 3.

**Normal condition is not displayed for item No.00 or No.01 :** Refer to inspection procedure P-5 "Column switch (lighting and turn-signal lamp switch) signal is not received P.54E-300."

**Normal condition is not displayed for item No.30 :** Refer to inspection procedure P-2 "The ignition switch (IG1) signal is not received P.54E-293."

**Normal condition is not displayed for item No.32 :** Refer to inspection procedure P-4 "The driver's door switch signal is not received P.54E-298."

**Normal condition is not displayed for item No.43 :** Replace the ETACS-ECU.

**Step 3. Retest the system.**

The lamp reminder buzzer function should work normally.

**Q: Is the check result normal?**

**YES :** The trouble can be an intermittent malfunction (Refer to GROUP 00 – How to Cope with Intermittent Malfunction P.00-5).

**NO :** Replace the ETACS-ECU.

Main Index
Group TOC

## INSPECTION PROCEDURE B-3: R (reverse) position warning function does not work.

**⚠ CAUTION**
**Whenever the ECU is replaced, ensure that the input and output signal circuits are normal.**

**R (reverse) Position Warning Function**

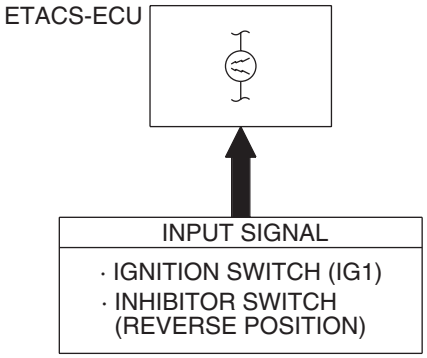


W4X54X102A

## COMMENTS ON TROUBLE SYMPTOM

If the R (Reverse) position alarm function does not work normally, the input signal circuits to the components below or the ETACS-ECU may be defective.

- Ignition switch (IG1)
- Shift lever IND (R illuminated)

## POSSIBLE CAUSES

- Malfunction of the ETACS-ECU

## DIAGNOSIS PROCEDURE

**Step 1. ECU check by using the SWS monitor**
Check that the power supply and earth lines to the ETACS-ECU and the SWS communication lines are normal.

- Ignition switch: ON

**ECU TO BE CHECKED**

- ETACS

**OK: "OK" is displayed on the "ETACS ECU" menu.**

**Q: Is the check result normal?**
**YES :** Go to Step 2.
**NO :** Refer to Inspection Procedure A-3 "Communication with the ETACS-ECU is not possible P.54E-55."

**Step 2. Function diagnosis by using the SWS monitor**
Check the SWS communication signal, which are related to the R (reverse) position warning function.

**<Selected item> BUZZER - REVERSE ALRM**

- Ignition switch: ON
- Inhibitor switch: R (reverse) position

| Item No. | Item name | Normal condition |
|---|---|---|
| Item 30 | IG SW(IG1) | OFF |
| Item 43 | BUZZER | ON |

**OK: Normal conditions are displayed for all the items.**

**Q: Are the check result normal?**
**Normal conditions are displayed for all the items :** Go to Step 4.
**Normal condition is not displayed for item No.30 :** Refer to inspection procedure P-2 "The ignition switch (IG1) signal is not received P.54E-293."
**Normal condition is not displayed for item No.43 :** Go to Step 3.

Main Index
Group TOC

**Step 3. Pulse check.**
Check the input signal, which are related to the R (reverse) position warning function.

| System switch | Check condition |
|---|---|
| Inhibitor switch (reverse position) | When the ignition switch is turned ON and the selector lever is moved to the R position. |

**OK: The M.U.T.-III sounds or the voltmeter needle fluctuates.**

**Q: Is the check result normal?**
**YES :** Go to Step 4.
**NO :** Refer to diagnosis code No.11 inspection procedure "Engine-A/T-ECU time-out (related to engine) P.54E-33 ."

**Step 4. Retest the system.**
Check that the R (reverse) position alarming function works normally.

**Q: Is the check result normal?**
**YES :** The trouble can be an intermittent malfunction (Refer to GROUP 00 – How to Cope with Intermittent Malfunction P.00-5).
**NO :** Replace the ETACS-ECU.

## INSPECTION PROCEDURE B-4: Door-ajar warning buzzer function does not work.

**⚠ CAUTION**
**Whenever the ECU is replaced, ensure that the input and output signal circuits are normal.**

**Door-Ajar Warning Buzzer Function**

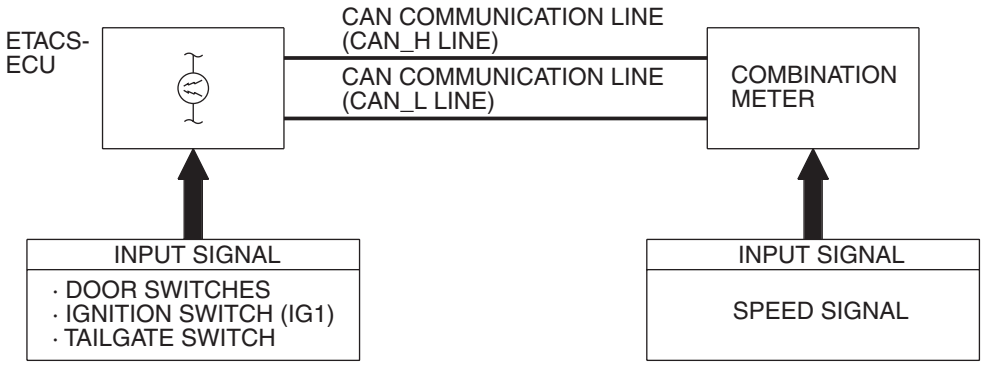


W4X54E220A

## COMMENTS ON TROUBLE SYMPTOM

The ETACS-ECU operates this function in accordance with the input signals below.

- Ignition switch (IG1)
- All of the door switches
- Vehicle speed signal

If this function does not work normally, these input signal circuit(s) or the ETACS-ECU may be defective. Note that this function can be disabled/enabled by the customise function (default setting; enabled). In order to change the setting, the SWS monitor is required.

## POSSIBLE CAUSES

- Malfunction of the door switches
- Malfunction of the ETACS-ECU
- Damaged harness wires and connectors

Main Index
Group TOC

## DIAGNOSTIC PROCEDURE

**Step 1. Customise function by using the SWS monitor**

Use the SWS monitor customisation function to confirm that "Door ajar buzzer" is set to other than "Without function" (one of the settings below).

- With function
- Sequential ope.

**Q: Is the check result normal?**

**YES :** Go to Step 2.

**NO :** Use the SWS monitor customisation function to set "Door ajar buzzer" to other than "Without function" ((Refer to Customise adjustment P.54E-353).

**Step 2. M.U.T.-III CAN bus diagnostics**

Use the M.U.T.-III to diagnose the CAN bus lines.

**Q: Is the check result normal?**

**YES :** Go to Step 3.

**NO :** Repair the CAN bus line (Refer to GROUP 54F, Diagnosis P.54F-13).

**Step 3. ECU check by using the SWS monitor**

Check that the power supply and earth lines to the ETACS-ECU and the SWS communication lines are normal.

- Ignition switch: ON

**ECU TO BE CHECKED**

- ETACS ECU

**OK: "OK" is displayed on the "ETACS ECU" menu.**

**Q: Is the check result normal?**

**YES :** Go to Step 4.

**NO :** Refer to Inspection Procedure A-3 "Communication with the ETACS-ECU is not possible P.54E-55."

**Step 4. SWS monitor data list**

Check the SWS communication signal, which is related to the door-ajar warning buzzer function.

**<Selected item> ETACS**

- Ignition switch: ON
- Driver's door: Open

| Item No. | Item name | Normal condition |
|---|---|---|
| Item 30 | IG SW(IG1) | ON |
| Item 32 | DR DOOR SW | ON |
| Item 43 | BUZZER | ON |

**OK: Normal conditions are displayed for all the items.**

**Q: Are the check result normal?**

**Normal conditions are displayed for all the items :** Go to Step 5.

**Normal condition is not displayed for item No.30. :** Refer to inspection procedure P-2 "The ignition switch (IG1) signal is not received P.54E-293."

**Normal condition is not displayed for item No.32. :** Refer to inspection procedure P-4 "The driver's door switch signal is not received P.54E-298."

**Normal condition is not displayed for item No.43. :** Replace the ETACS-ECU.

**Step 5. ETACS switch data by using the SWS monitor**

Check the ETACS-ECU input signal related to the door-ajar warning buzzer function.

- Doors other than the driver's door (including the tailgate): Closed to open

| Item No. | Item name | Normal condition |
|---|---|---|
| Item 5 | Passenger's door switch | from OFF to ON |
| Item 7 | Trunk or lift gate switch | from OFF to ON |
| Item 41 | Rear door (right side) switch | from OFF to ON |
| Item 42 | Rear door (left side) switch | from OFF to ON |

**OK: Normal conditions are displayed for all the items.**

**Q: Are the check result normal?**

**YES :** Go to Step 6.

**NO :** Refer to inspection procedure P-12 "All the door switch signals are not received P.54E-316."

Main Index
Group TOC

**Step 6. ETACS ANALOG data by using the SWS monitor.**

Check the ETACS-ECU signal related to the door-ajar warning buzzer function.

- Set the simulated vehicle speed at approximately 10km/h.

| Item No. | Item name | Normal condition |
|---|---|---|
| Item 3 | Vehicle speed | 8 to 10 km/h |

**OK: Normal condition is displayed.**

**Q: Is the check result normal?**

**YES :** Go to Step 7.

**NO :** Refer to inspection procedure P-21 "The vehicle speed signal is not received P.54E-343."

**Step 7. Retest the system.**

Check that the door-ajar warning buzzer function works normally.

**Q: Is the check result normal?**

**YES :** The trouble can be an intermittent malfunction (Refer to GROUP 00 – How to Cope with Intermittent Malfunction P.00-5).

**NO :** Replace the ETACS-ECU

## INSPECTION PROCEDURE B-5: Turn-signal lamp operation sound function does not work normally.

**⚠ CAUTION**

**Whenever the ECU is replaced, ensure that the input and output signal circuits are normal.**

**Turn-Signal Lamp Operation Sound Function**

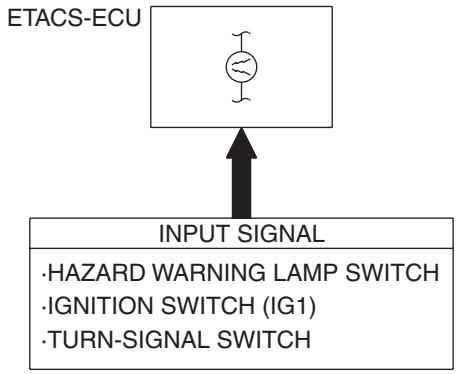


W4X54E225A

## COMMENTS ON TROUBLE SYMPTOM

The ETACS-ECU operates this function in accordance with the input signals below.

- Turn-signal lamp switch
- Hazard warning lamp switch

If this function does not work normally, these input signal circuit(s) or the ETACS-ECU may be defective. Note that this function can be disabled/enabled by the customise function (default setting; disabled). In order to change the setting, the SWS monitor is required.

## POSSIBLE CAUSES

- Malfunction of the column switch
- Malfunction of the ETACS-ECU
- Damaged harness wires and connectors

Main Index
Group TOC

## DIAGNOSTIC PROCEDURE

**Step 1. Check that the turn-signal lamps operate.**
When the turn-signal lamp switch or the hazard warning lamp switch is operated, check that the turn-signal lamps flash.

**Q: Is the check result normal?**
**YES :** Go to Step 2.
**NO :** First, repair the turn-signal lamp(s) (Refer to Trouble Symptom Chart P.54E-40).

**Step 2. Customise function by using the SWS monitor**
Use the SWS monitor customisation function to confirm that "Turn-signal buzzer" is set to "With function".

**Q: Is the check result normal?**
**YES :** Go to Step 3.
**NO :** Use the SWS monitor customisation function to set "Turn-signal buzzer" to "With function" (Refer to P.54E-353).

**Step 3. M.U.T.-III CAN bus diagnostics**
Use the M.U.T.-III to diagnose the CAN bus lines.

**Q: Is the check result normal?**
**YES :** Go to Step 4.
**NO :** Repair the CAN bus line (Refer to GROUP 54F, Diagnosis P.54F-13).

**Step 4. ECU check by using the SWS monitor**
Check that the power supply and earth lines to the ETACS-ECU and the column switch (column-ECU) and the SWS communication lines are normal.
- Ignition switch: ON

**ECUS TO BE CHECKED**
- ETACS-ECU
- Column ECU

**OK: "OK" is displayed for all the items**

**Q: Are the check result normal?**
**Normal conditions are displayed for all the items. : .** Go to Step 5.
**"NG" is displayed on the "ETACS ECU" menu. : .** Refer to Inspection Procedure A-3 "Communication with the ETACS-ECU is not possible P.54E-55."
**"NG" is displayed on the "COLUMN ECU" menu. : .** Refer to Inspection Procedure A-2 "Communication with the column switch (column-ECU) is not possible P.54E-51."

**Step 5. SWS monitor data list**
Check the SWS communication input signal, which are related to the turn-signal lamp operation sound function.

**<Selected item> ETACS-ECU**
- Hazard warning switch: ON

| Item No. | Item name | Normal condition |
|---|---|---|
| Item 43 | BUZZER | ON |

**OK: Normal condition is displayed.**

**Q: Is the check result normal?**
**YES :** Go to Step 6.
**NO :** Replace the ETACS-ECU.

**Step 6. Retest the system.**
Check that the turn-signal lamp operation sound function works normally.

**Q: Is the check result normal?**
**YES :** The trouble can be an intermittent malfunction (Refer to GROUP 00 – How to Cope with Intermittent Malfunction P.00-5).
**NO :** Replace the ETACS-ECU.

Main Index
Group TOC

# CENTRAL DOOR LOCKING SYSTEM

## INSPECTION PROCEDURE C-1: Central door locking system does not work.

**⚠ CAUTION**

**Whenever the ECU is replaced, ensure that the input and output signal circuits are normal.**

**Central Door Lock Power Supply Circuit**

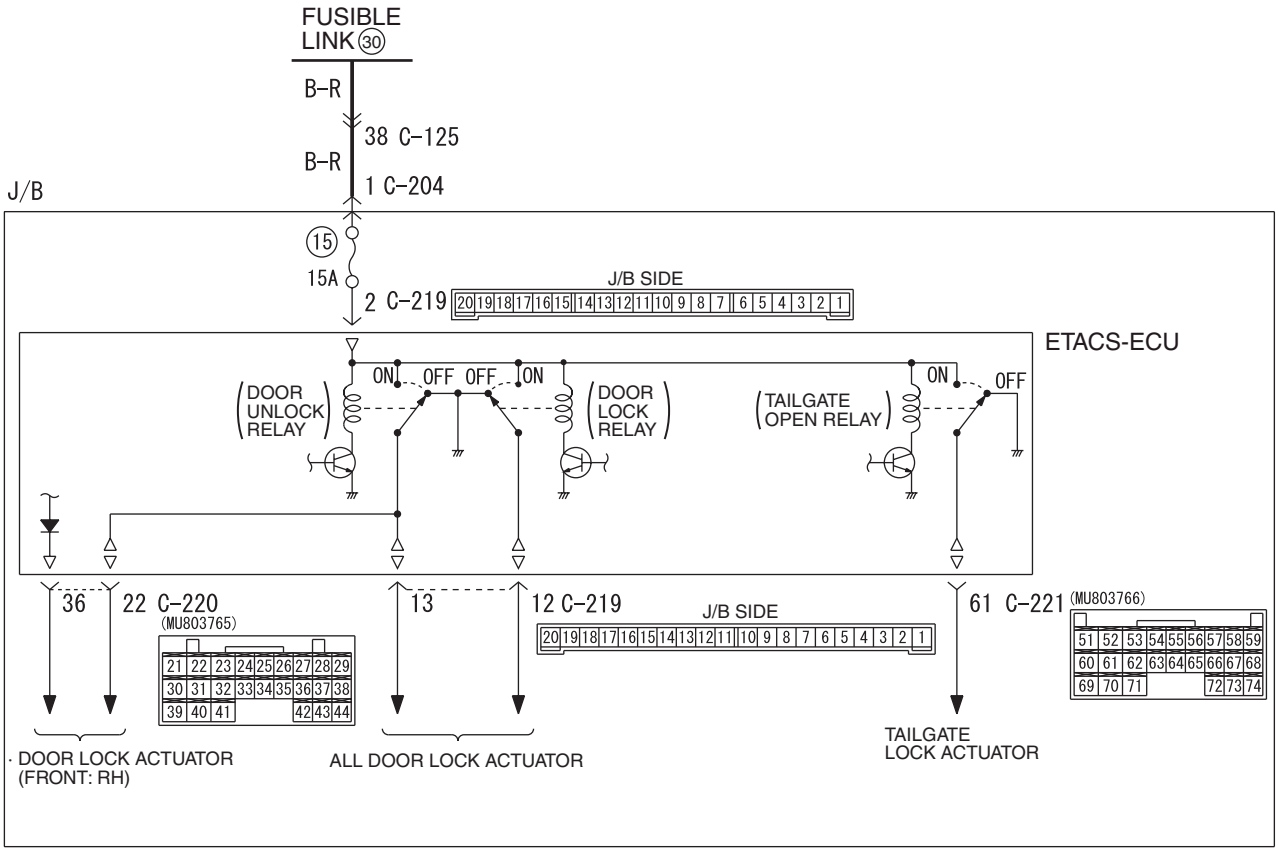


W4X54X115A

## COMMENT ON TROUBLE SYMPTOM

If the central door locking system does not work at all, the ETACS-ECU may be defective.

## POSSIBLE CAUSES

- Malfunction of the ETACS-ECU
- Damaged harness wires and connectors

## DIAGNOSIS PROCEDURE

### Step 1. Check the central door lock operation with door lock switch

Use the door lock switch to check that the central door locking system works normally.

**Q: Is the check result normal?**

**YES :** Go to Step 2 .

**NO :** Refer to Inspection Procedure C-2 "The central door locking system does not function by using the driver's door lock switch. P.54E-86".

Main Index
Group TOC

**Step 2. ECU check by using the SWS monitor**

Check that the power supply and earth lines to the ETACS-ECU and the SWS communication lines are normal.

- Ignition switch: OFF

**ECU TO BE CHECKED**

- ETACS ECU

**OK: "OK" is displayed on the "ETACS ECU" menu.**

**Q: Is the check result normal?**

**YES :** Go to Step 3.

**NO :** Refer to Inspection Procedure A-3 "Communication with the ETACS-ECU is not possible P.54E-55."

**Step 3. Connector check: C-219 ETACS-ECU connector**

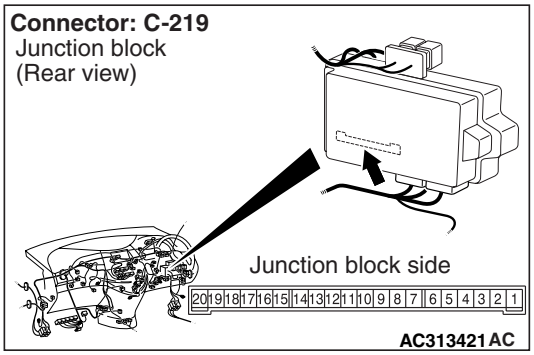


**Q: Is the check result normal?**

**YES :** Go to Step 4.

**NO :** Repair the defective connector.

**Step 4. Check the wiring harness between C-219 ETACS-ECU connector terminal No.2 to fusible link (30).**

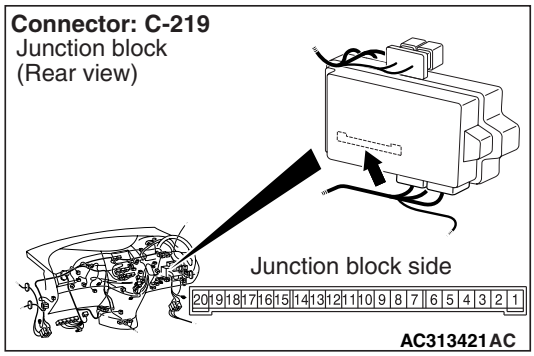


*NOTE:*

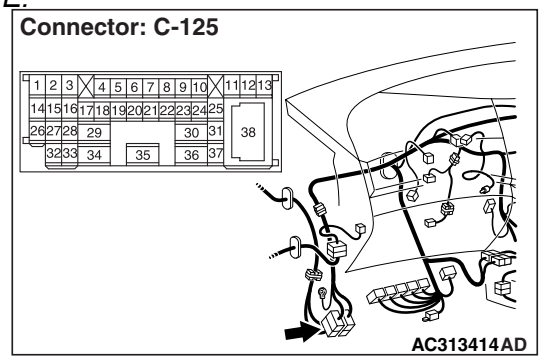


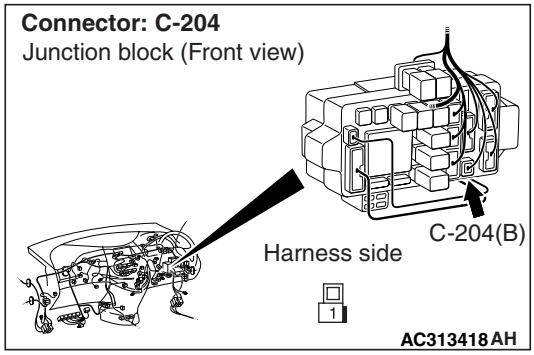


*Prior to the wiring harness inspection, check intermediate connector C-125 and junction block connector C-204, and repair if necessary.*

- Check the power supply line for open or short circuit.

**Q: Is the check result normal?**

**YES :** Go to Step 5.

**NO :** Repair the wiring harness.

**Step 5. Retest the system.**

Check that the central door locking system works normally.

**Q: Is the check result normal?**

**YES :** The trouble can be an intermittent malfunction (Refer to GROUP 00 – How to Cope with Intermittent Malfunction P.00-5).

**NO :** Replace the ETACS-ECU.

Main Index
Group TOC

## INSPECTION PROCEDURE C-2: The central door locking system does not function by using the driver's door lock switch.

**⚠ CAUTION**
**Whenever the ECU is replaced, ensure that the input and output signal circuits are normal.**

**Central Door Lock (Driver's Door Lock Actuator Switch) Circuit**

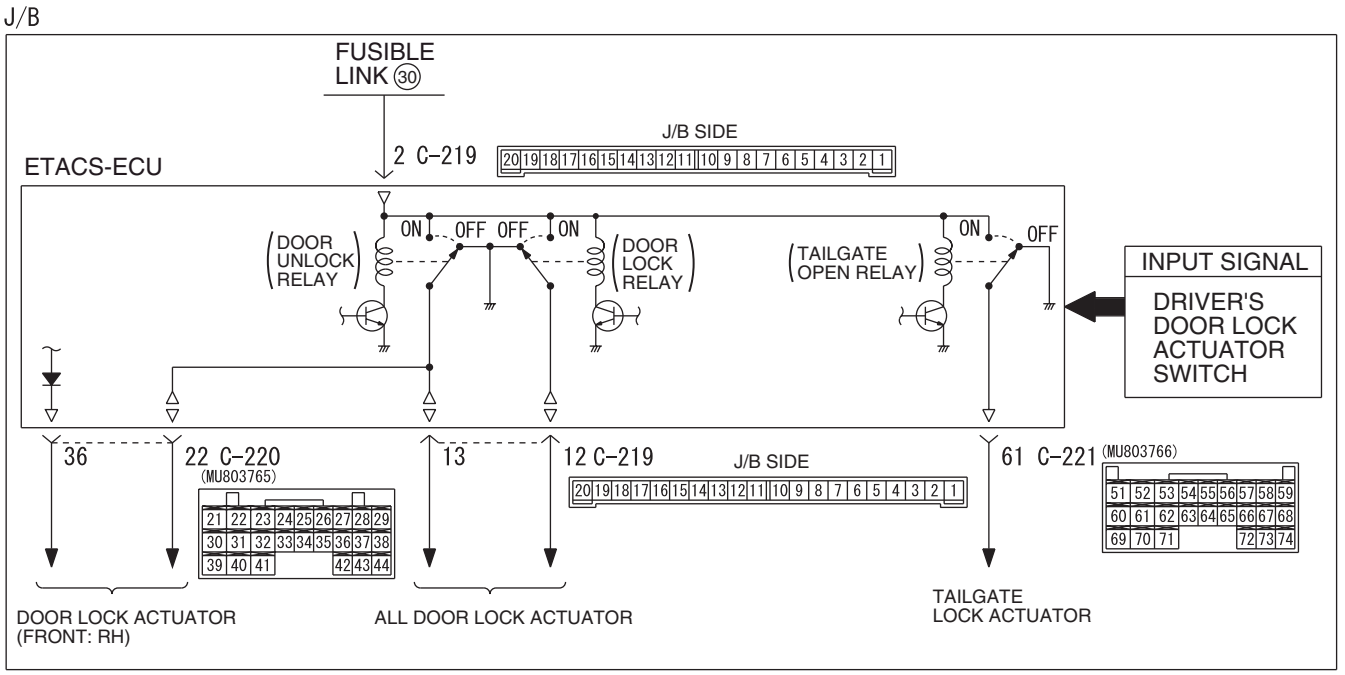


## COMMENT ON TROUBLE SYMPTOM

If the central door locking system does not work normally only when the driver's door lock switch is operated, the driver's door lock actuator or the ETACS-ECU may be defective.

## POSSIBLE CAUSES

- Malfunction of the driver’s door lock actuator
- Malfunction of the ETACS-ECU
- Damaged harness wires and connectors

## DIAGNOSIS PROCEDURE

**Step 1. ETACS switch data by using the SWS monitor**

Check the ETACS-ECU signal, which is related to the driver's door lock operation.

- Driver’s door: Unlock → Lock

| Item No. | Item name | Normal condition |
|---|---|---|
| Item 21 | Dr door lock actuator switch | from OFF to ON |
| Item 22 | Dr door unlock actuator switch | from ON to OFF |

**OK: Normal condition are displayed for all the items.**

**Q: Are the check result normal?**

**YES :** Go to Step 2.

**NO :** Refer to inspection procedure P-13 "The driver's door lock actuator switch signal is not received P.54E-320."

Main Index
Group TOC

**Step 2. Retest the system.**
Check that the central door locking system works normally by the driver's door lock operation.

**Q: Is the check result normal?**
**YES :** The trouble can be an intermittent malfunction (Refer to GROUP 00 – How to Cope with Intermittent Malfunction P.00-5).
**NO :** Replace the ETACS-ECU.

## INSPECTION PROCEDURE C-3: The central door lock switch (incorporated with the power window main switch) fails to perform central door locking operation.

**⚠ CAUTION**
**Whenever the ECU is replaced, ensure that the input and output signal circuits are normal.**

**Central Door Lock (Central Door Switch) Circuit**

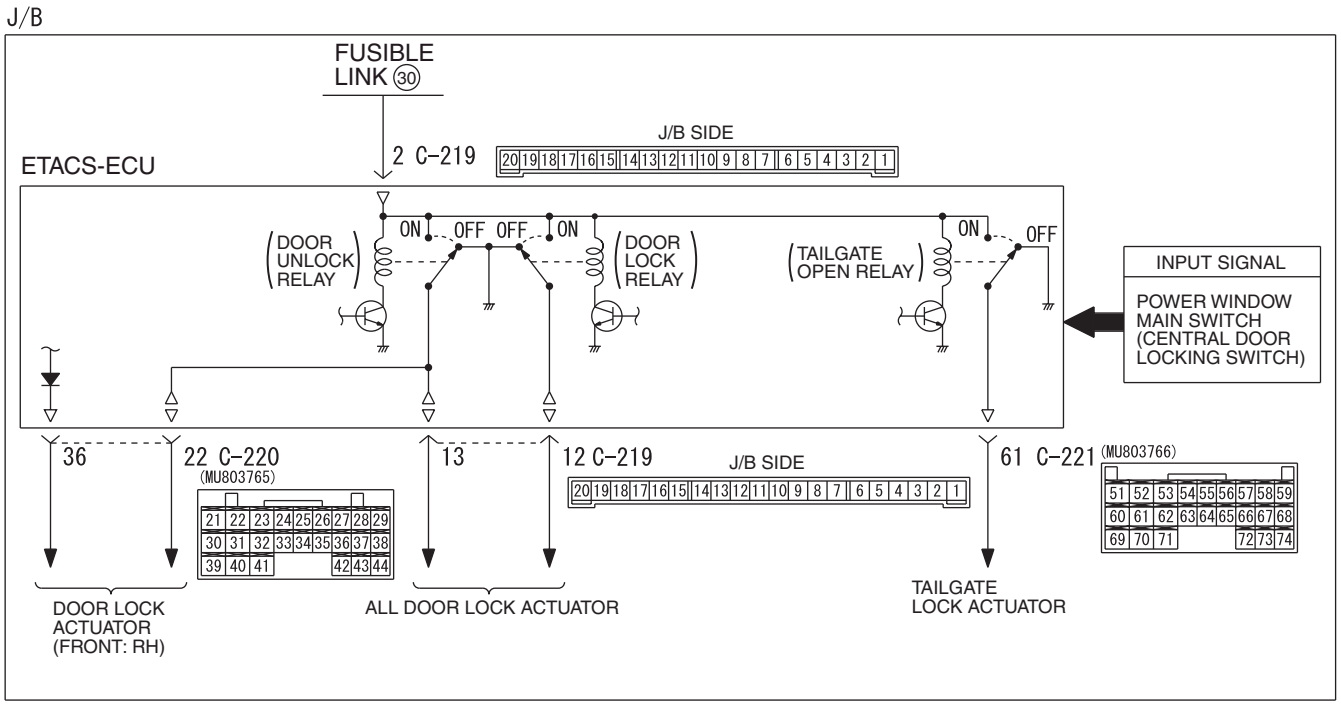


W4X54X140A

## COMMENTS ON TROUBLE SYMPTOM

If this function does not work normally, the input signal circuit(s) of the central door lock switch (incorporated with the power window main switch) or the ETACS-ECU may be defective.

## POSSIBLE CAUSES

- The central door lock switch (incorporated with the power window main switch) is defective.
- Malfunction of the ETACS-ECU
- Damaged harness wires and connectors

Main Index
Group TOC

## DIAGNOSIS PROCEDURE

**Step 1. ETACS switch data by using the SWS monitor**

Check the ETACS-ECU signal, which is related to the central door locking system.

- Door lock switch: Neutral to lock

| Item No. | Item name | Normal condition |
|---|---|---|
| Item 26 | Centre door lock switch | ON (only when operated to lock) |
| Item 27 | Centre door unlock switch | OFF |

**OK: Normal conditions are displayed for all the items.**

**Q: Are the check result normal?**

**YES :** Go to step 2.

**NO :** Refer to Inspection Procedure P-15 "The signals from the central door locking switch (integrated in power window main switch) are not received P.54E-323."

**Step 2. Retest the system.**

Check that the central door lock switch (incorporated with the power window main switch) works normally.

**Q: Is the check result normal?**

**YES :** The trouble can be an intermittent malfunction (Refer to GROUP 00 – How to Cope with Intermittent Malfunction P.00-5).

**NO :** Replace the ETACS-ECU.

Main Index
Group TOC

## INSPECTION PROCEDURE C-4: A door can not be locked or unlocked by the central door locking system.

### Central Door Lock Circuit

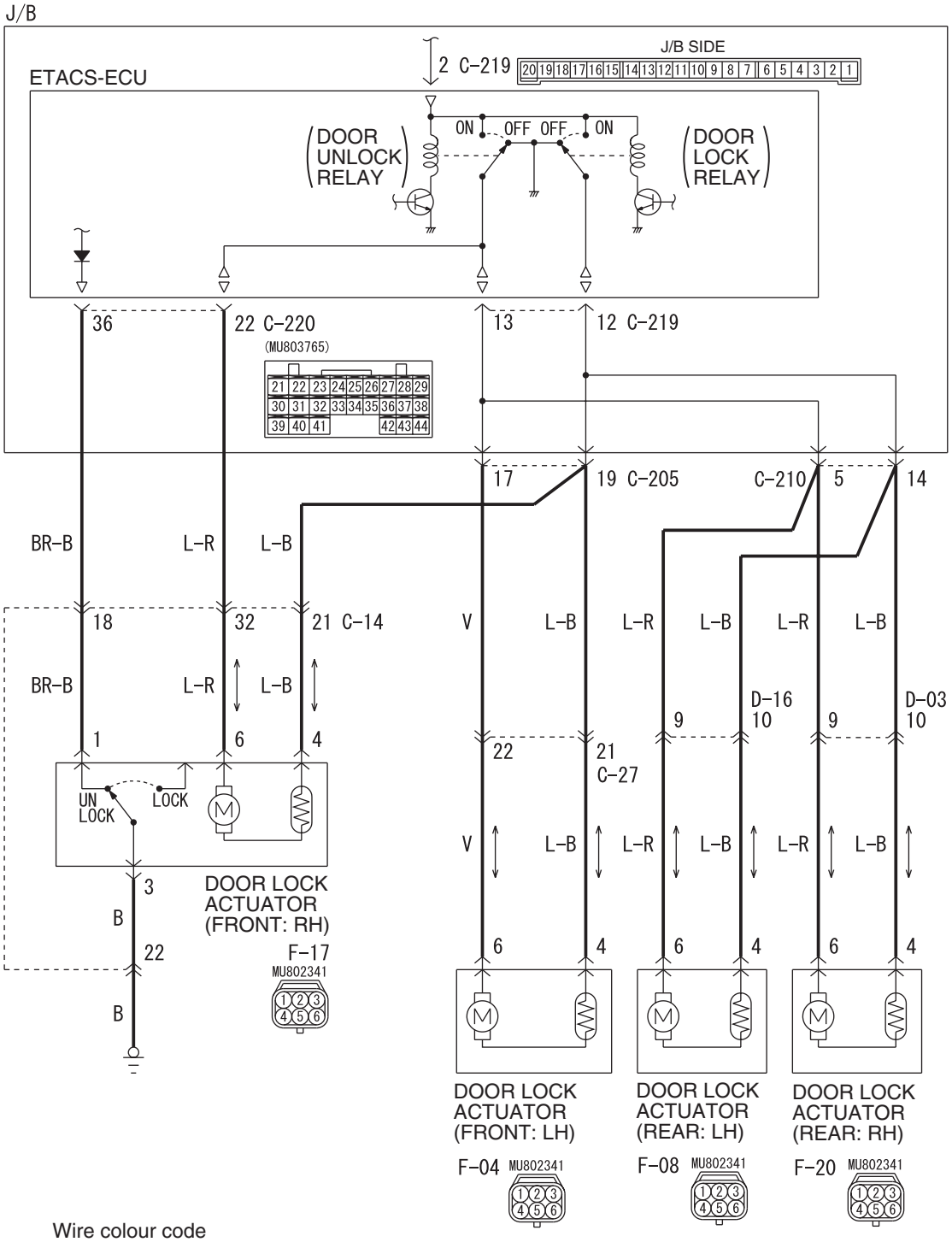


Wire colour code
B : Black LG : Light green G : Green L : Blue W : White Y : Yellow SB : Sky blue
BR : Brown O : Orange GR : Grey R : Red P : Pink V : Violet PU : Purple

W6X54X048A

Main Index
Group TOC

## COMMENT ON TROUBLE SYMPTOM

If a door can not be locked or unlocked by the central door locking system, the door lock actuator may be defective.

## POSSIBLE CAUSES

- Malfunction of the door lock actuator
- Damaged harness wires and connectors

## DIAGNOSIS PROCEDURE

### Step 1. Confirm which door lock actuator is defective.

**Q: Which door fails to lock correctly?**
**Driver's door :** Go to Step 2.
**Front passenger's door :** Go to Step 6.
**Rear right door :** Go to Step 10.
**Rear left door :** Go to Step 14.

### Step 2. Connector check: F-17 door lock actuator (front: RH) connector

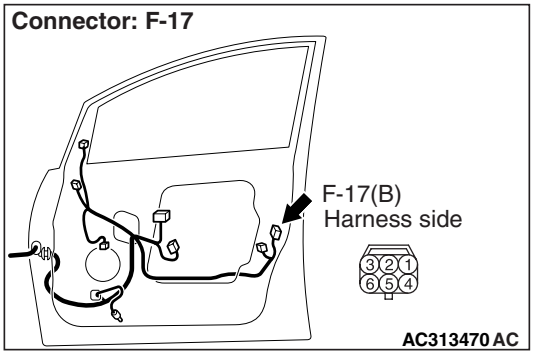


**Q: Is the check result normal?**
**YES :** Go to Step 3.
**NO :** Repair the defective connector.

### Step 3. Check the door lock actuator (front: RH)

Check that the door lock actuator (front: RH) works normally. Refer to GROUP 42 – Door P.42-45.

**Q: Is the check result normal?**
**YES :** Go to Step 4.
**NO :** Replace the door lock actuator (front: RH).

### Step 4. Connector check: C-219, C-220 ETACS-ECU connector

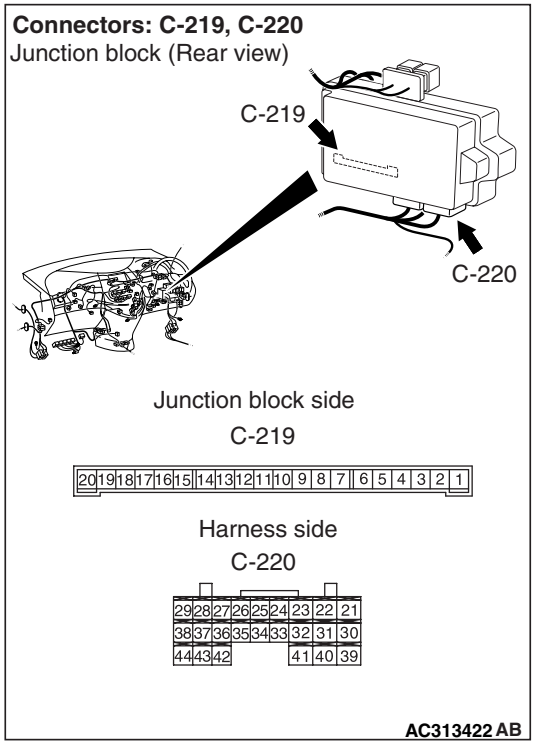


**Q: Is the check result normal?**
**YES :** Go to Step 5.
**NO :** Repair the defective connector.

Main Index
Group TOC

**Step 5. Check the wiring harness from C-219 ETACS-ECU connector terminal No.12 and C-220 ETACS-ECU connector No.22 to F-17 door lock actuator (front: RH) connector terminal Nos. 4 and 6.**

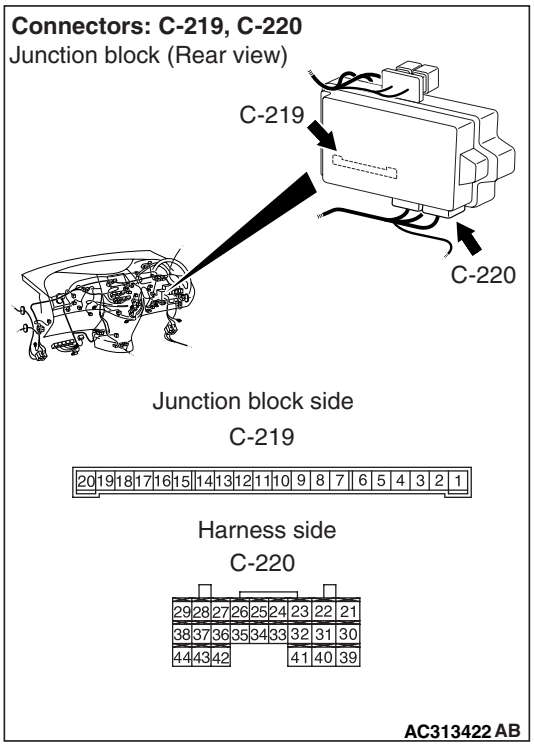


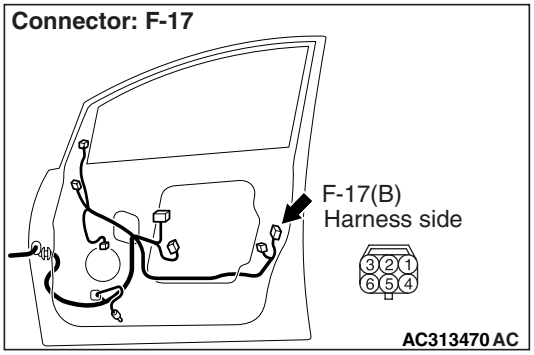


*NOTE:*

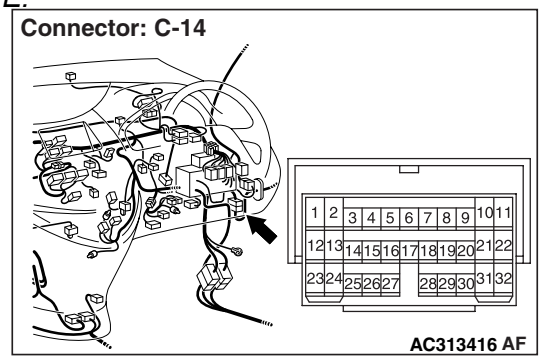


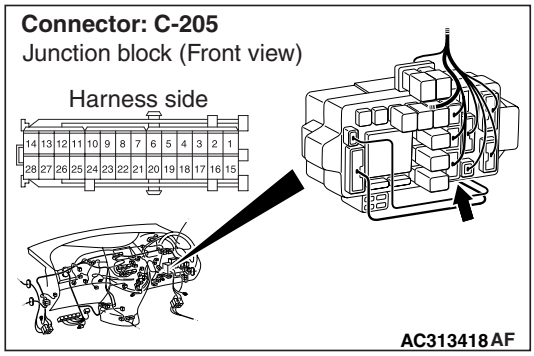


*Prior to the wiring harness inspection, check intermediate connector C-14 and junction block connector C-205, and repair if necessary.*

- Check the input and output lines for open circuit.

**Q: Is the check result normal?**

**YES :** The trouble can be an intermittent malfunction (Refer to GROUP 00 – How to Cope with Intermittent Malfunction P.00-5).

**NO :** Repair the wiring harness.

**Step 6. Connector check: F-04 door lock actuator (front: LH) connector**

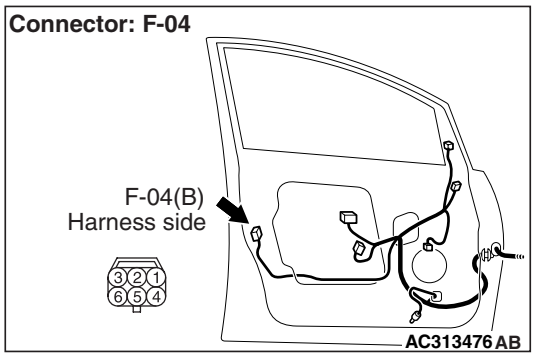


**Q: Is the check result normal?**

**YES :** Go to Step 7.

**NO :** Repair the defective connector.

Main Index
Group TOC

**Step 7. Check the door lock actuator (front: LH).**
Check that the door lock actuator (front: LH) works normally. Refer to GROUP 42 – Door P.42-45.

**Q: Is the check result normal?**
**YES :** Go to Step 8.
**NO :** Replace the door lock actuator (front: LH).

**Step 8. Connector check: C-219 ETACS-ECU connector**

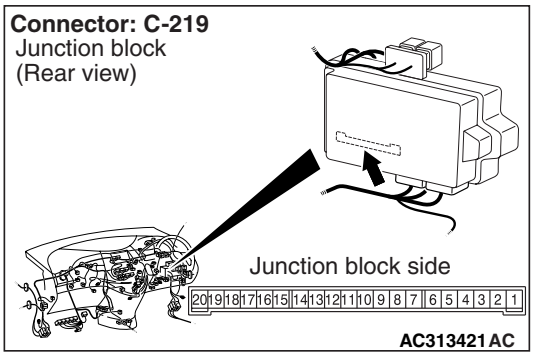


**Q: Is the check result normal?**
**YES :** Go to Step 9.
**NO :** Repair the defective connector.

**Step 9. Check the wiring harness from C-219 ETACS-ECU connector terminal Nos. 12 and 13 to F-04 door lock actuator (front: LH) connector terminal Nos. 4 and 6.**

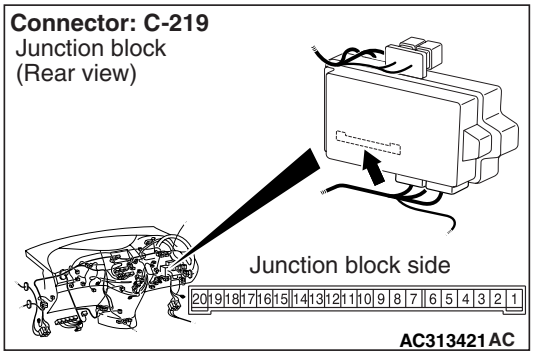


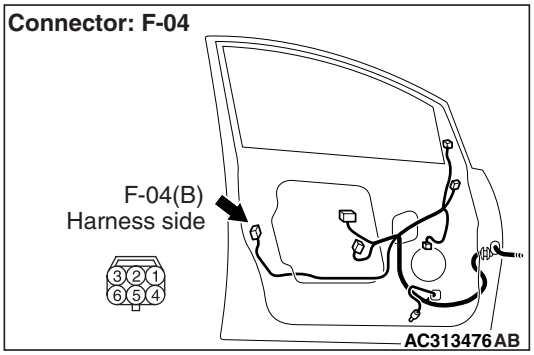


*NOTE:*

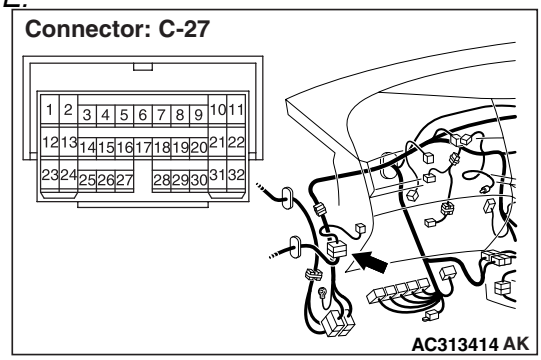


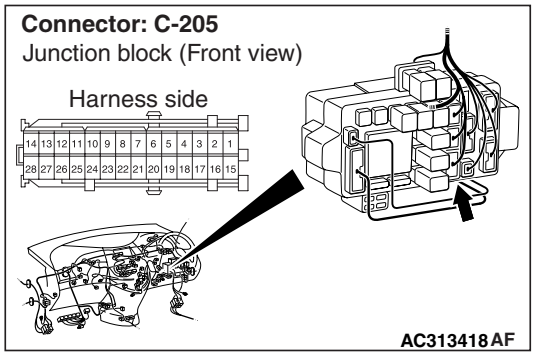


*Prior to the wiring harness inspection, check intermediate connector C-27 and junction block connector C-205, and repair if necessary.*

- Check the input and output lines for open circuit.

**Q: Is the check result normal?**
**YES :** The trouble can be an intermittent malfunction (Refer to GROUP 00 – How to Cope with Intermittent Malfunction P.00-5).
**NO :** Repair the wiring harness.

**Step 10. Connector check: F-20 door lock actuator (rear: RH) connector**

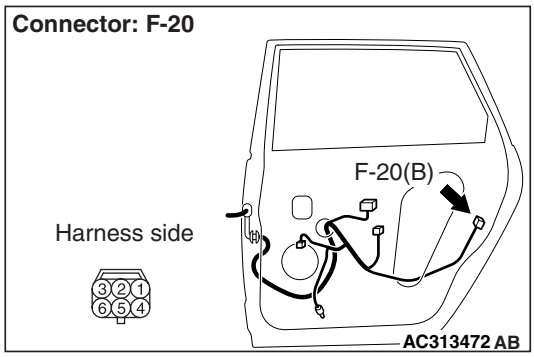


**Q: Is the check result normal?**
**YES :** Go to Step 11.
**NO :** Repair the defective connector.

Main Index
Group TOC

**Step 11. Check the door lock actuator (rear: RH).**
Check that the door lock actuator (rear: RH) is in good condition. Refer to GROUP 42 – Door P.42-45.

**Q: Is the check result normal?**
**YES :** Go to Step 12.
**NO :** Replace the door lock actuator (rear: RH).

**Step 12. Connector check: C-219 ETACS-ECU connector**

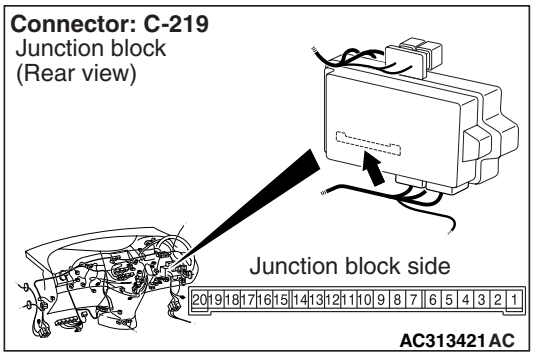


**Q: Is the check result normal?**
**YES :** Go to Step 13.
**NO :** Repair the defective connector.

**Step 13. Check the wiring harness from C-219 ETACS-ECU connector terminal Nos. 12 and 13 to F-20 door lock actuator (rear: RH) connector terminal Nos. 4 and 6.**

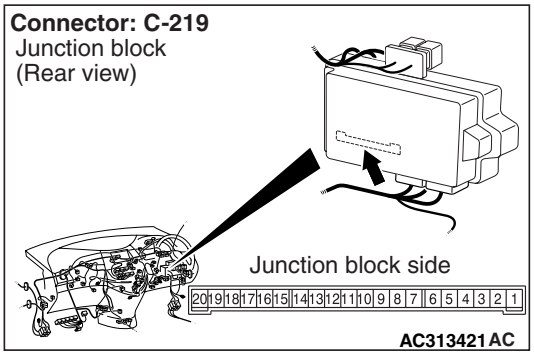


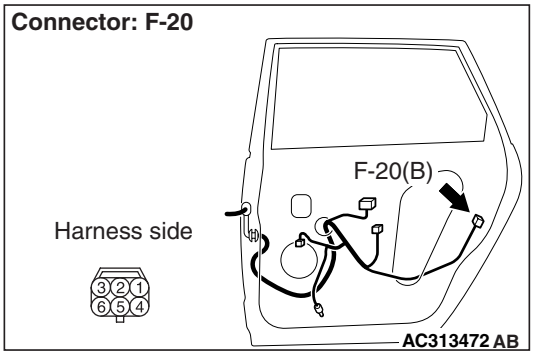


*NOTE:*

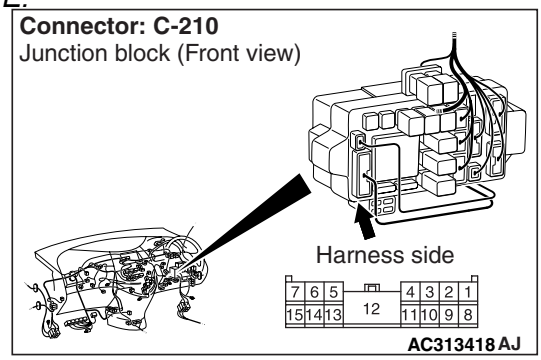


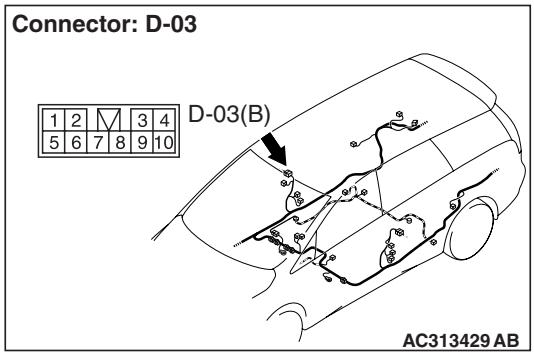


*Prior to the wiring harness inspection, check intermediate connector D-03 and junction block connector C-210, and repair if necessary.*

- Check the input and output lines for open circuit.

**Q: Is the check result normal?**
**YES :** The trouble can be an intermittent malfunction (Refer to GROUP 00 – How to Cope with Intermittent Malfunction P.00-5).
**NO :** Repair the wiring harness.

**Step 14. Connector check: F-08 door lock actuator (rear: LH) connector**

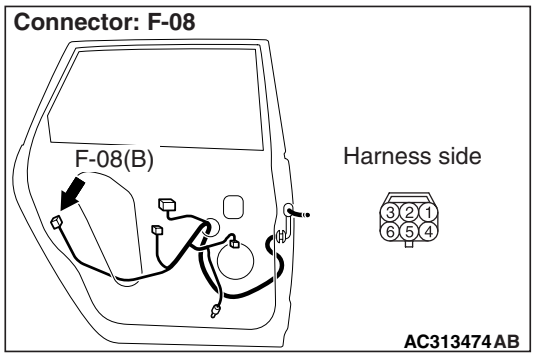


**Q: Is the check result normal?**
**YES :** Go to Step 15.
**NO :** Repair the defective connector.

Main Index
Group TOC

**Step 15. Check the door lock actuator (rear: LH).**
Check that the door lock actuator (rear: LH) is in good condition. Refer to GROUP 42 – Door P.42-45.

**Q: Is the check result normal?**
**YES :** Go to Step 16.
**NO :** Replace the door lock actuator (rear: LH).

**Step 16. Connector check: C-219 ETACS-ECU connector**

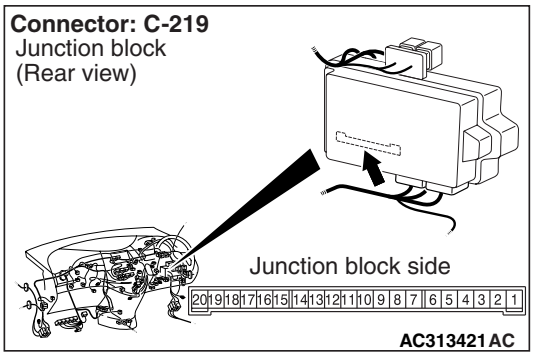


**Q: Is the check result normal?**
**YES :** Go to Step 17.
**NO :** Repair the defective connector.

**Step 17. Check the wiring harness from C-219 ETACS-ECU connector terminal Nos. 12 and 13 to F-08 door lock actuator (rear: LH) connector terminal Nos. 4 and 6.**

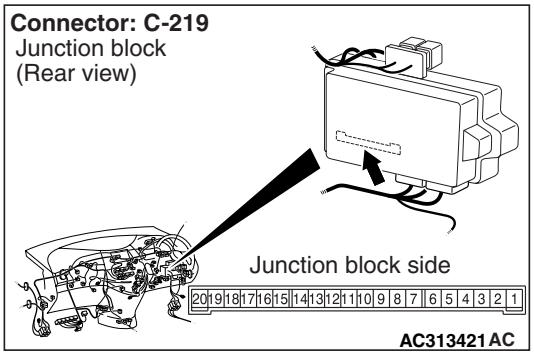


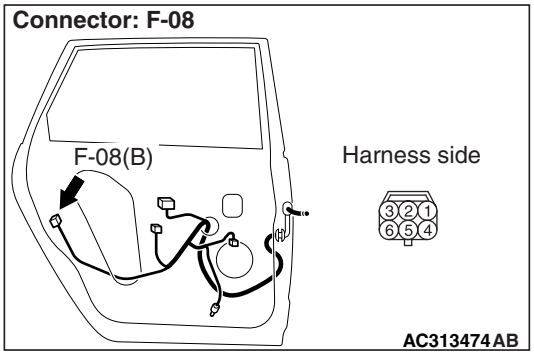


*NOTE:*

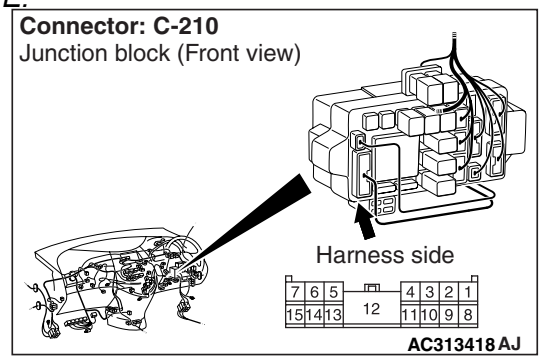


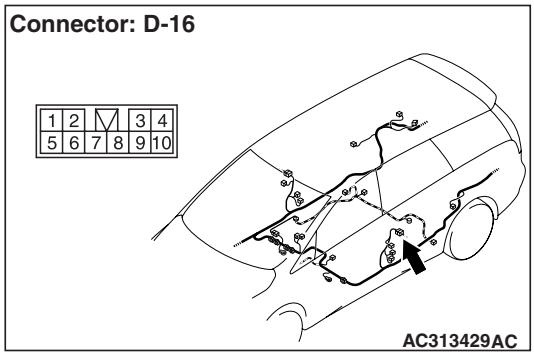


*Prior to the wiring harness inspection, check intermediate connectors D-16 and junction block connector C-210, and repair if necessary.*

- Check the input and output lines for open circuit.

**Q: Is the check result normal?**
**YES :** The trouble can be an intermittent malfunction (Refer to GROUP 00 – How to Cope with Intermittent Malfunction P.00-5).
**NO :** Repair the wiring harness.

Main Index
Group TOC

## INSPECTION PROCEDURE C-5: The tailgate cannot be opened or closed.

**Tailgate Open Circuit**

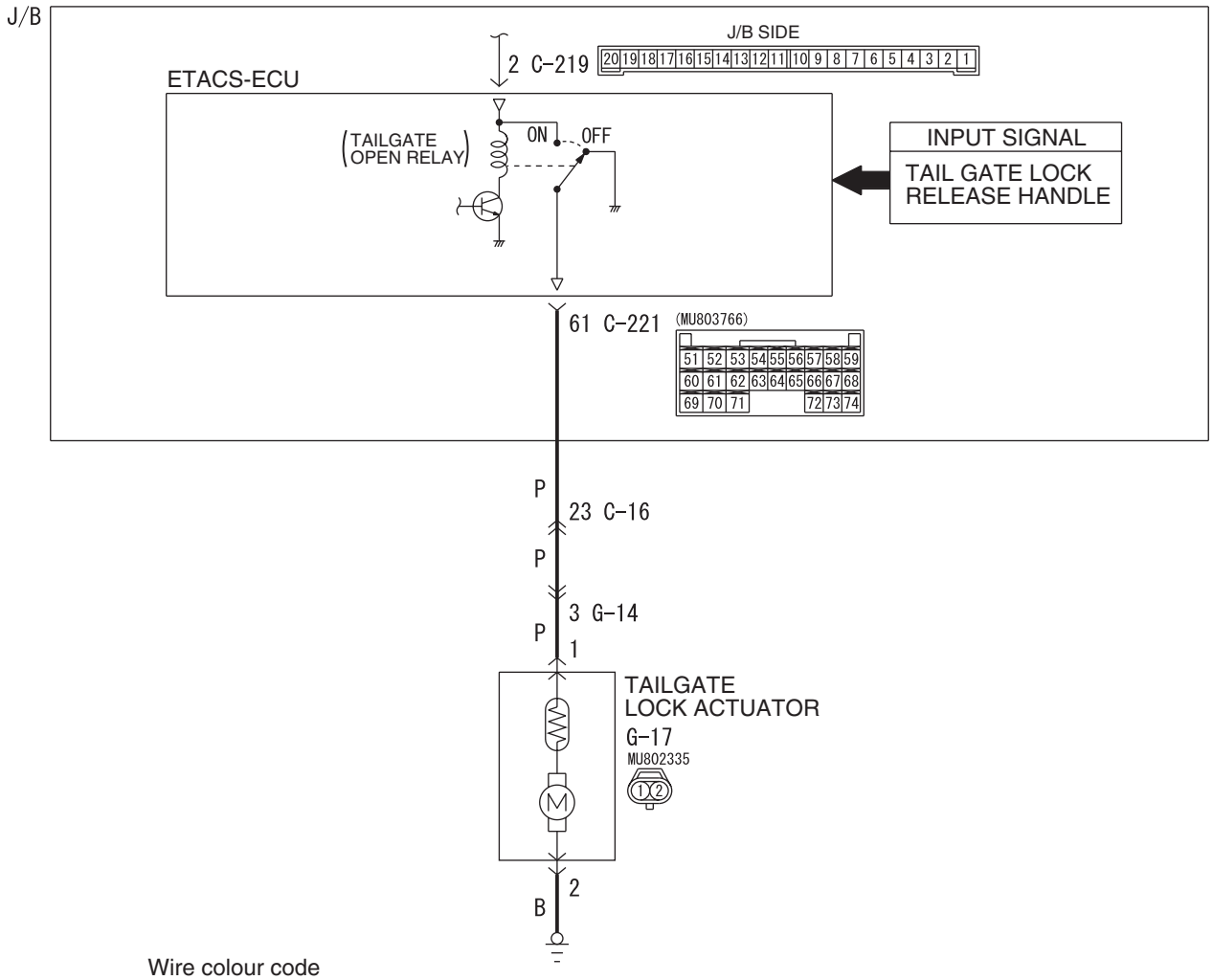


Wire colour code
B : Black LG : Light green G : Green L : Blue W : White Y : Yellow SB : Sky blue
BR : Brown O : Orange GR : Grey R : Red P : Pink V : Violet PU : Purple

W6X54X049A

## COMMENT ON TROUBLE SYMPTOM

If the tailgate can not be locked or unlocked by the central door locking system, the tailgate lock actuator or the ETACS-ECU may be defective.

## POSSIBLE CAUSES

- Malfunction of the tailgate lock actuator
- Malfunction of the ETACS-ECU
- Damaged harness wires and connectors

Main Index
Group TOC

## DIAGNOSIS PROCEDURE

**Step 1. Check that the central door locking system and the keyless entry system operate.**
Check that the doors (excluding the tailgate) are locked and unlocked normally when the central door locking and keyless entry systems are operated.

**Q: Is the check result normal?**
**YES :** Go to Step 2
**NO :** <When the central door locking does not operate normally> Refer to Inspection Procedure C-1 "Central door locking system does not work P.54E-84." <When the keyless entry system does not operate normally> Refer to Inspection Procedure E-1 "Keyless Entry System does not Work P.54E-132."

**Step 2. SWS monitor data list**
Check the SWS communication input signal, which are related to the tailgate opening and closing.

**<Selected item> ETACS ECU**
- Ignition switch: from OFF to ON

| Item No. | Item name | Normal condition |
|---|---|---|
| Item 30 | IG SW(IG1) | from OFF to ON |

**OK: Normal condition is displayed.**

**Q: Is the check result normal?**
**YES :** Go to Step 3.
**NO :** Refer to Inspection Procedure P-2 "The ignition switch (IG1) signal is not received P.54E-293."

**Step 3. ETACS switch data by using the SWS monitor**
Check the ETACS-ECU signal related to the tailgate opening and closing.
- Tailgate lock release handle: from OFF to ON

| Item No. | Item name | Normal conditions |
|---|---|---|
| Item 30 | Gate opener switch | OFF to ON (only when switch is operated) |

**OK: Normal condition is displayed.**

**Q: Is the check result normal?**
**YES :** Go to Step 4.
**NO :** Replace the ETACS-ECU.

**Step 4. Connector check: G-17 tailgate lock actuator connector**

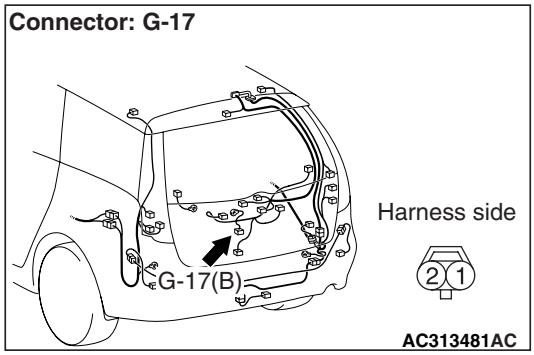


**Q: Is the check result normal?**
**YES :** Go to Step 5.
**NO :** Repair the defective connector.

**Step 5. Check the tailgate lock actuator.**
Check that the tailgate lock actuator is in good condition. Refer to GROUP 42 – Tailgate P.42-60.

**Q: Is the check result normal?**
**YES :** Go to Step 6.
**NO :** Replace the tailgate lock actuator.

**Step 6. Resistance measurement at the G-17 tailgate lock actuator connector.**

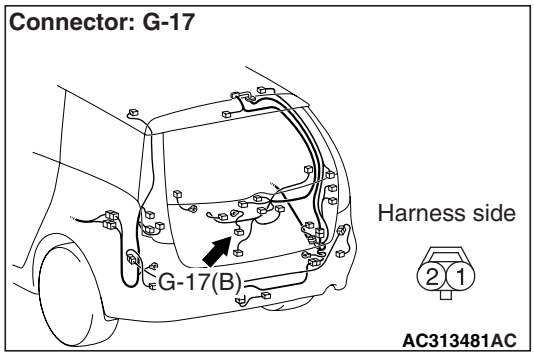


(1) Disconnect the connector, and measure at the wiring harness side.

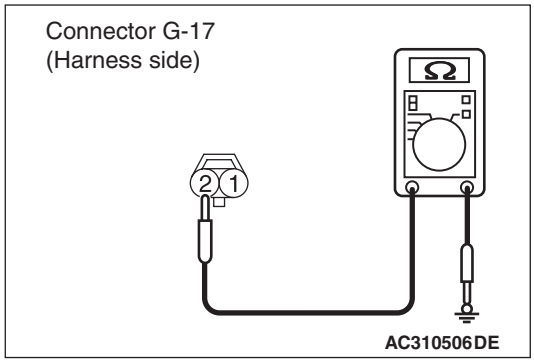


(2) Resistance between G-17 tailgate lock actuator connector terminal No.2 and body earth

**OK: 2 Ω or less**

Main Index
Group TOC

**Q: Is the check result normal?**
**YES :** Go to Step 8.
**NO :** Go to Step 7.

## Step 7. Check the wiring harness between G-17 tailgate lock actuator connector terminal No.2 to the body earth.

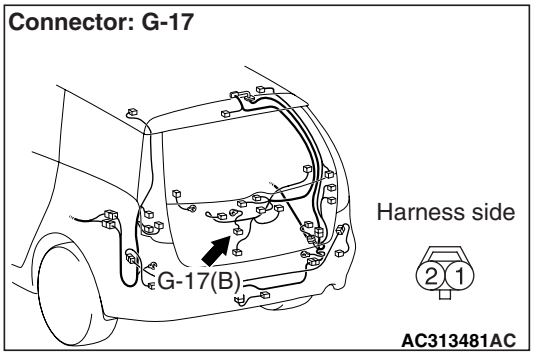


- Check the earth wires for open circuit.

**Q: Is the check result normal?**
**YES :** The trouble can be an intermittent malfunction (Refer to GROUP 00 – How to Cope with Intermittent Malfunction P.00-5).
**NO :** Repair the wiring harness.

## Step 8. Connector check: C-221 ETACS-ECU connector

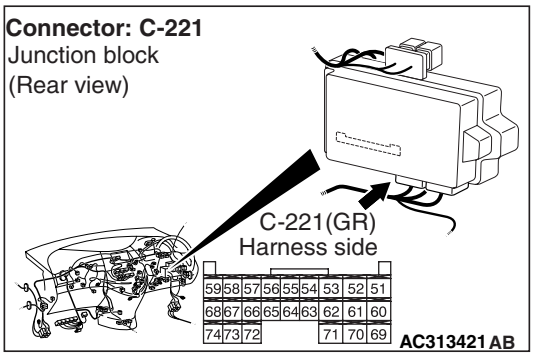


**Q: Is the check result normal?**
**YES :** Go to Step 9.
**NO :** Repair the defective connector.

## Step 9. Check the wiring harness from C-221 ETACS-ECU connector terminal No.61 to G-17 tailgate lock actuator connector terminal No.1.

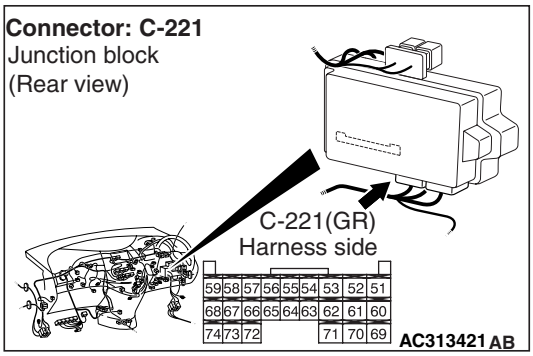


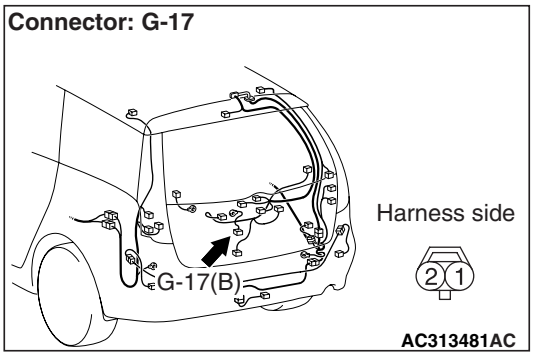


*NOTE:*

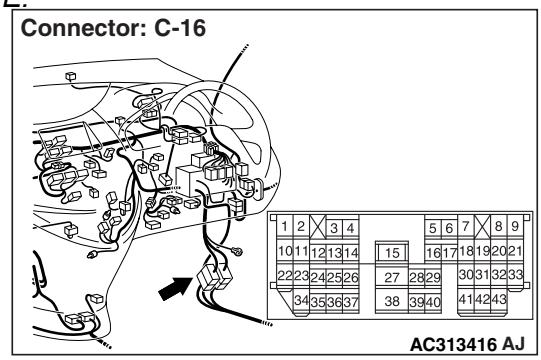


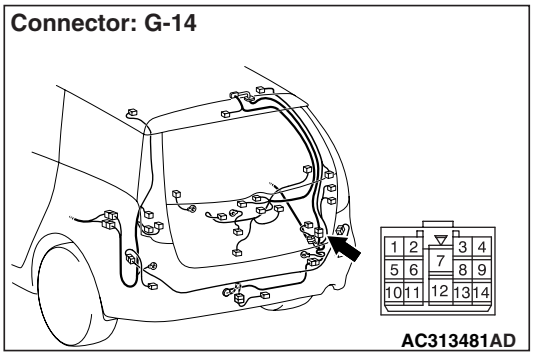


*Prior to the wiring harness inspection, check intermediate connector C-16, G-14, and repair if necessary.*

- Check the input and output lines for open circuit.

**Q: Is the check result normal?**
**YES :** Go to Step 10.
**NO :** Repair the wiring harness.

Main Index
Group TOC

**Step 10. Retest the system.**
Check that the tailgate lock works normally.

**Q: Is the check result normal?**
**YES :** The trouble can be an intermittent malfunction (Refer to GROUP 00 – How to Cope with Intermittent Malfunction P.00-5).
**NO :** Replace the ETACS-ECU.

## INSPECTION PROCEDURE C-6: Selector "P" position-linked door unlock function does not operate.

**⚠ CAUTION**
**Whenever the ECU is replaced, ensure that the input and output signal circuits are normal.**

### COMMENT ON TROUBLE SYMPTOM

If the doors are not unlocked when the selector lever is shifted to the P position, the shift position signal input circuit(s) or the ETACS-ECU may be defective. Also, the function to interlock the shift P position with door unlocking may have been disabled with a customisation function.

### POSSIBLE CAUSES

- Malfunction of the ETACS-ECU
- Damaged harness wires and connectors

### DIAGNOSIS PROCEDURE

**Step 1. Checking central door unlocking operation**
Check that the central door locking system works normally.

**Q: Is the check result normal?**
**YES :** Go to Step 2.
**NO :** Refer to Inspection Procedure C-1 "Central door locking system does not work P.54E-84."

**Step 2. Customise function by using the SWS monitor**
Use the SWS monitor customisation function to confirm that "Door unlock ope. synch P range" is set other than to "Without function" (one of the settings below).

- With function
- Power window lock switch OFF, with function

**Q: Is the check result normal?**
**YES :** Go to Step 3.
**NO :** Use the SWS monitor customisation function to set "Door unlock ope. synch P range" to other than "Without function", one of the settings below. (Refer to P.54E-353.)

**Step 3. M.U.T.-III CAN bus diagnostics**
Use the M.U.T.-III to diagnose the CAN bus lines.

**Q: Is the check result normal?**
**YES :** Go to Step 4.
**NO :** Repair the CAN bus line (Refer to GROUP 54F, Diagnosis P.54F-13).

**Step 4. M.U.T.-III other system diagnosis code**
Check if the diagnosis code is set.

**Q: Is the diagnosis code set?**
**YES :** Diagnose the automatic transmission system (Refer to GROUP 23A – Troubleshooting P.23A-6).
**NO :** Go to Step 5.

**Step 5. Retest the system.**
Check that shifting the selector lever to the P position unlocks the doors.

**Q: Is the check result normal?**
**YES :** Intermittent malfunction (Refer to GROUP 00 – How to Use Troubleshooting/Inspection Service Points P.00-5).
**NO :** Replace the ETACS-ECU.

Main Index
Group TOC

# POWER WINDOW

## INSPECTION PROCEDURE D-1: Power windows do not work at all.

**⚠ CAUTION**

**Whenever the ECU is replaced, ensure that the input and output signal circuits are normal.**

**Power Window Relay Circuit**

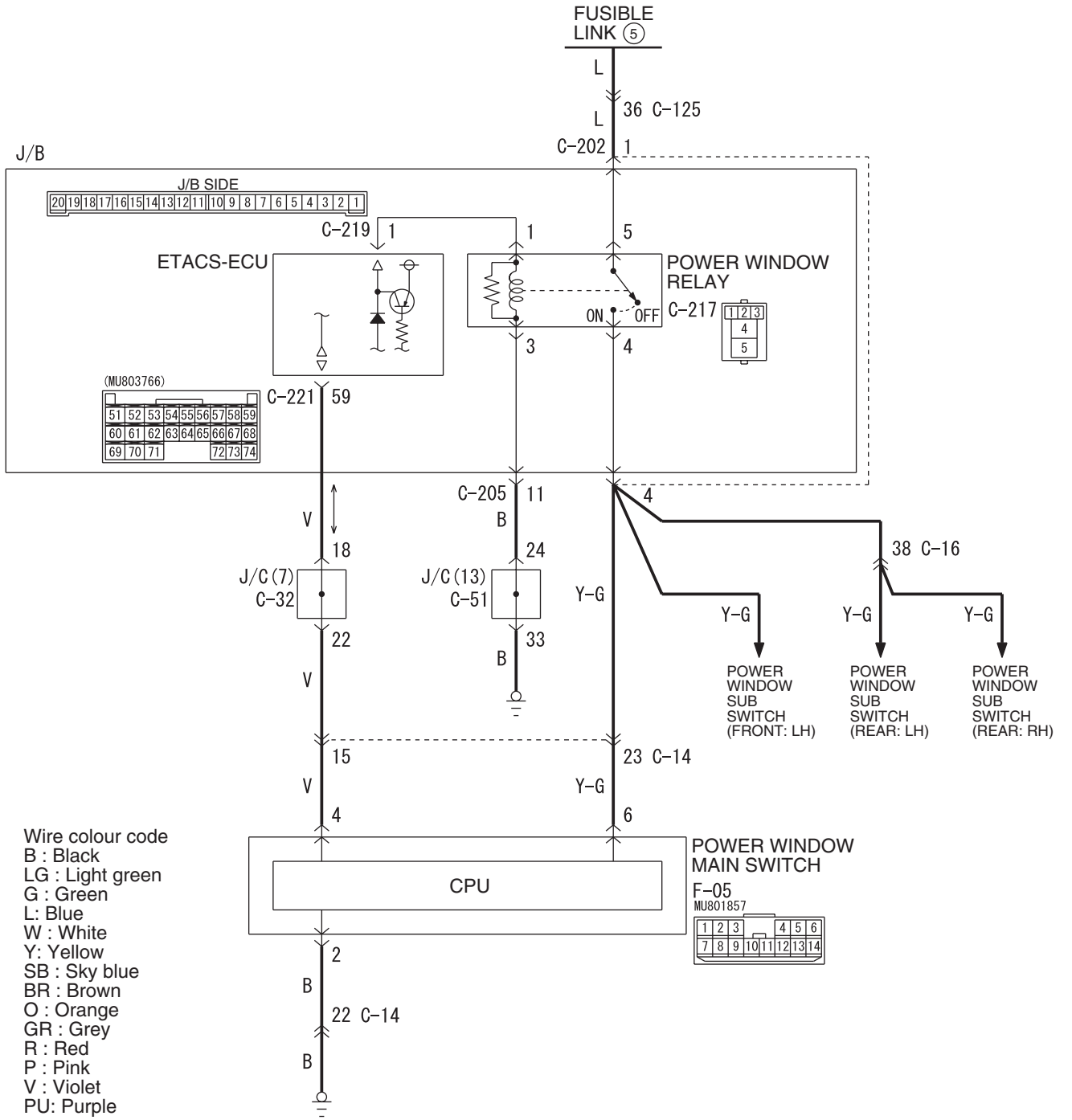


W6X54X050A

Main Index
Group TOC

## COMMENTS ON TROUBLE SYMPTOM

If the power windows do not work at all, the power window relay, the power window main switch or the ETACS-ECU may be defective.

## PROBABLE CAUSES

- Malfunction of the power window relay
- Malfunction of the power window main switch
- Malfunction of the ETACS-ECU
- Damaged harness wires and connectors

## DIAGNOSIS PROCEDURE

**Step 1. ECU check by using the SWS monitor**

Check that the power supply and earth lines to the ETACS-ECU and the power window main switch (power window module) and the SWS communication lines are normal.

- Turn the ignition switch to the ON position.

**ECUS TO BE CHECKED**

- ETACS ECU
- P/W MODULE

**OK: "OK" is displayed for all the items**

**Q: Is the check result normal?**

**"OK" is displayed for all the items :** Go to Step 2.

**"NG" is displayed on the "ETACS ECU" menu. :** Refer to Inspection Procedure A-3 "Communication with the ETACS-ECU is not possible P.54E-55."

**"NG" is displayed on the "P/W MODULE" menu. :** Refer to Inspection Procedure A-5 "Communication with the power window main switch (power window module) is not possible P.54E-64."

**Step 2. Function diagnosis by using the SWS monitor**

Check the SWS communication signal, which are related to the power windows.

**<Selected item> POWER WINDOW**

- Turn the ignition switch to the ON position.
- Power window main switch: UP

| Item No. | Item name | Normal condition |
|---|---|---|
| Item 30 | IG SW (IG1) | ON |
| Item 33 | P/W SW ACCEPT | PERMIT |
| Item 71 | P/W ECU ACK | INPUT CHECK (only momentarily when switch is operated) |

**OK: Normal conditions are displayed for all the items.**

**Q: Is the check result normal?**

**Normal conditions are displayed for all the items :** Go to Step 3.

**Normal condition is not displayed for item No.30 :** Refer to inspection procedure P-2 "The ignition switch (IG1) signal is not received P.54E-293."

**Normal condition is not displayed for item No.33 :** Replace the ETACS-ECU.

**Normal condition is not displayed for item No.71 :** Replace the power window main switch.

**Step 3. SWS monitor data list**

Check the SWS communication signal, which are related to the power windows.

**<Selected item> DOOR CNT. COM.**

- Insert the probe (For the insertion point, refer to P.54E-6).
- Turn the ignition switch to the ON position.
- Power window main switch: UP

| Item No. | Item name | Normal condition |
|---|---|---|
| C0 | Pass door UP SW | ON |

**OK: Normal condition is displayed.**

**Q: Is the check result normal?**

**YES :** Go to Step 4.

**NO :** Replace the power window main switch.

**Step 4. Retest the system.**

Check that the all the power windows work.

**Q: Is the check result normal?**

**YES :** The trouble can be an intermittent malfunction (Refer to GROUP 00 – How to Cope with Intermittent Malfunction P.00-5).

**NO :** Replace the power window main switch.

Main Index
Group TOC

## INSPECTION PROCEDURE D-2: Driver's power window does not work by means of the power window main switch.

**Power Window (Front: RH) Circuit**

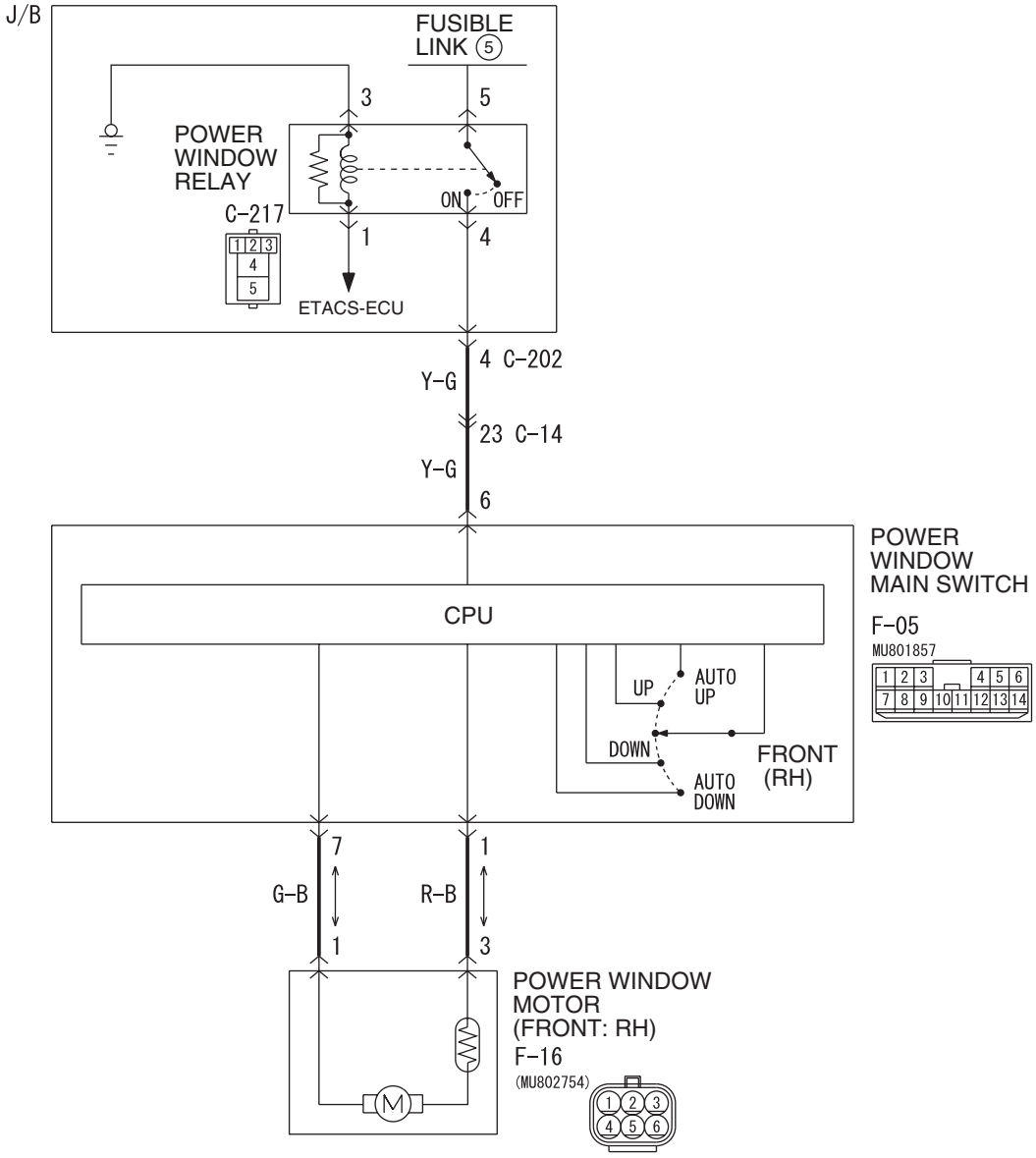


Wire colour code
B : Black LG : Light green G : Green L : Blue W : White Y : Yellow SB : Sky blue
BR : Brown O : Orange GR : Gray R : Red P : Pink V : Violet

W4X54X059A

## COMMENTS ON TROUBLE SYMPTOM

If the driver's power window does not work by means of the power window main switch, the power window main switch or the driver's door power window motor may be defective.

## POSSIBLE CAUSES

- Malfunction of the power window main switch
- Malfunction of the power window motor (front: RH)
- Damaged harness wires and connectors

Main Index
Group TOC

## DIAGNOSIS PROCEDURE

**Step 1. Check the power window main switch.**
Check that all of the front passenger's and rear door power windows can operate by means of the power window main switch.

**Q: Is the check result normal?**
**YES :** Go to Step 2.
**NO :** Refer to Inspection Procedure D-1 "Power windows do not work at all P.54E-99."

**Step 2. Connector check: F-05 power window main switch connector and F-16 power window motor (front: RH) connector**

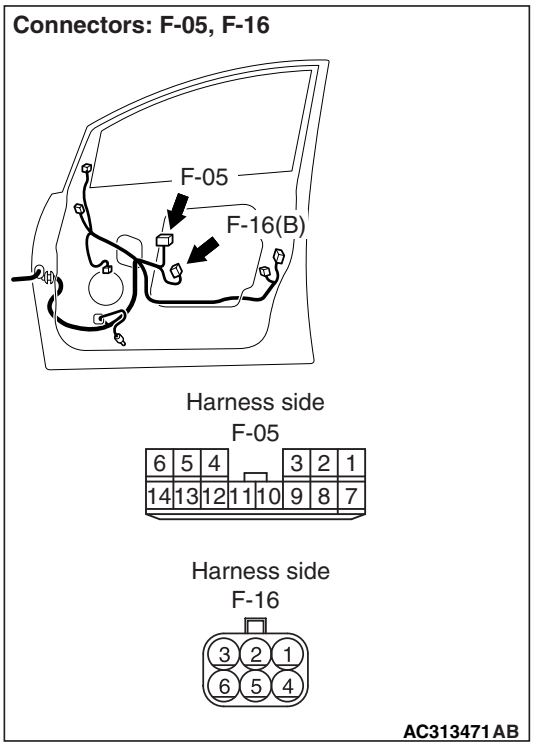


**Q: Are the check result normal?**
**YES :** Go to Step 3.
**NO :** Repair the connector.

**Step 3. Check the wiring harness from F-16 power window motor (front: RH) connector terminal Nos. 1 and 3 to F-05 power window main switch connector terminal Nos. 7 and 1.**

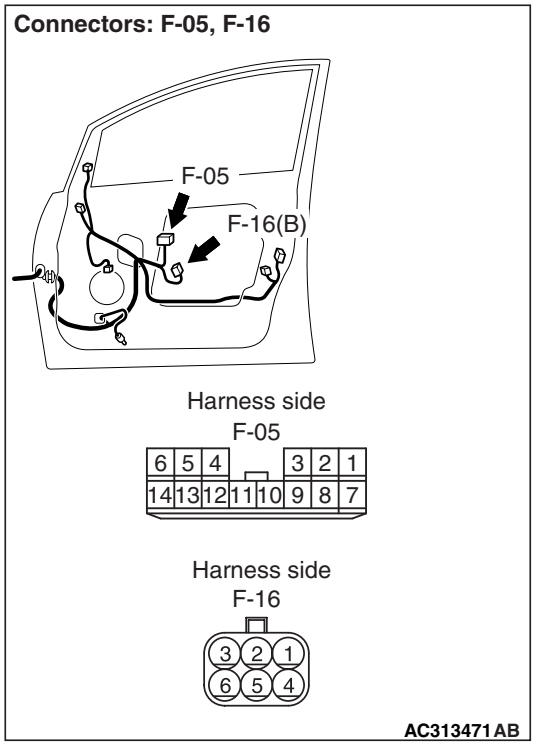


- Check the input and output lines for open or short circuit.

**Q: Is the check result normal?**
**YES :** Go to Step 4.
**NO :** Repair the wiring harness.

**Step 4. Retest the system.**
After the power window main switch is replaced, check that the driver's door power window can be operated by the power window main switch.
(1) Replace the power window main switch.
(2) Check that the driver's power window works by means of the power window main switch.

**Q: Is the check result normal?**
**YES :** The trouble can be an intermittent malfunction (Refer to GROUP 00 – How to Cope with Intermittent Malfunction P.00-5).
**NO :** Replace the power window motor assembly (front: LH).

Main Index
Group TOC

## INSPECTION PROCEDURE D-3: Relevant power window(s) do not work by means of the front and rear power window sub switches.

**Power Window (Front: LH) Circuit**

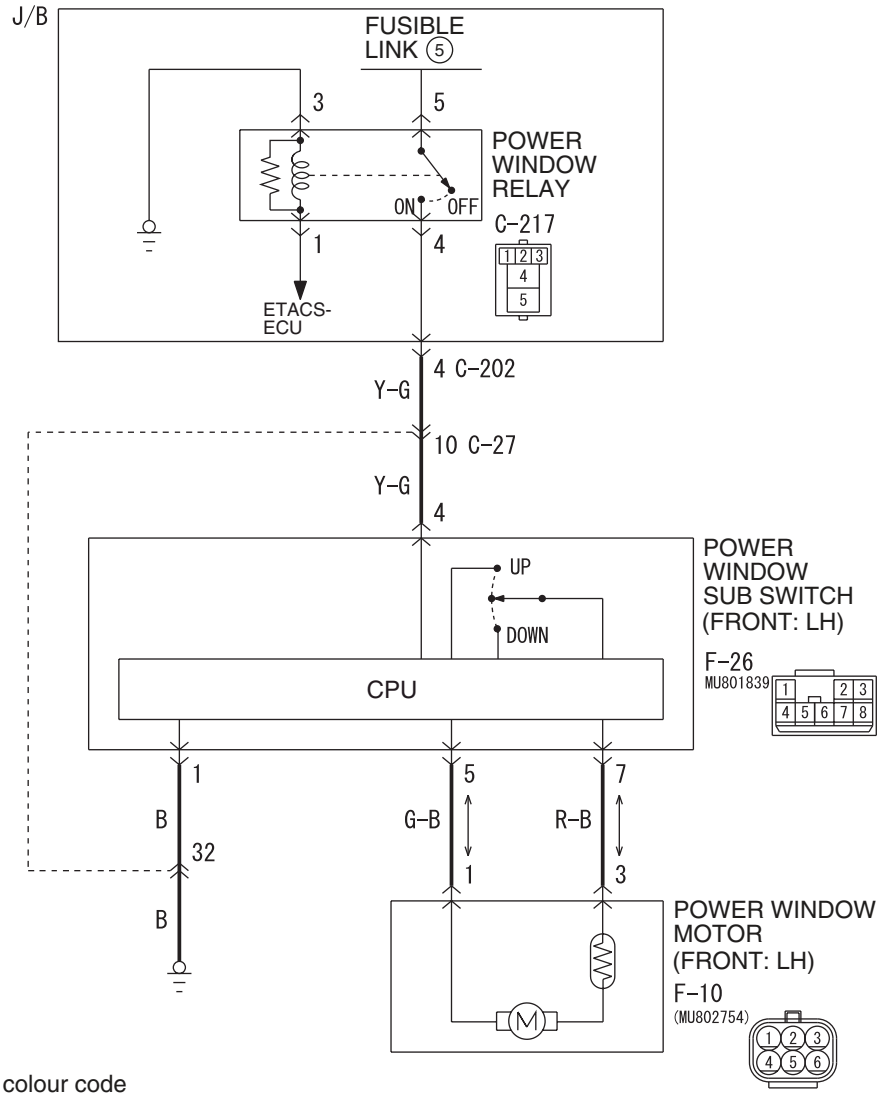


Wire colour code
B : Black LG : Light green G : Green L : Blue W : White Y : Yellow SB : Sky blue
BR : Brown O : Orange GR : Gray R : Red P : Pink V : Violet

W4X54X060A

Main Index
Group TOC

**Power Window (rear) Circuit**

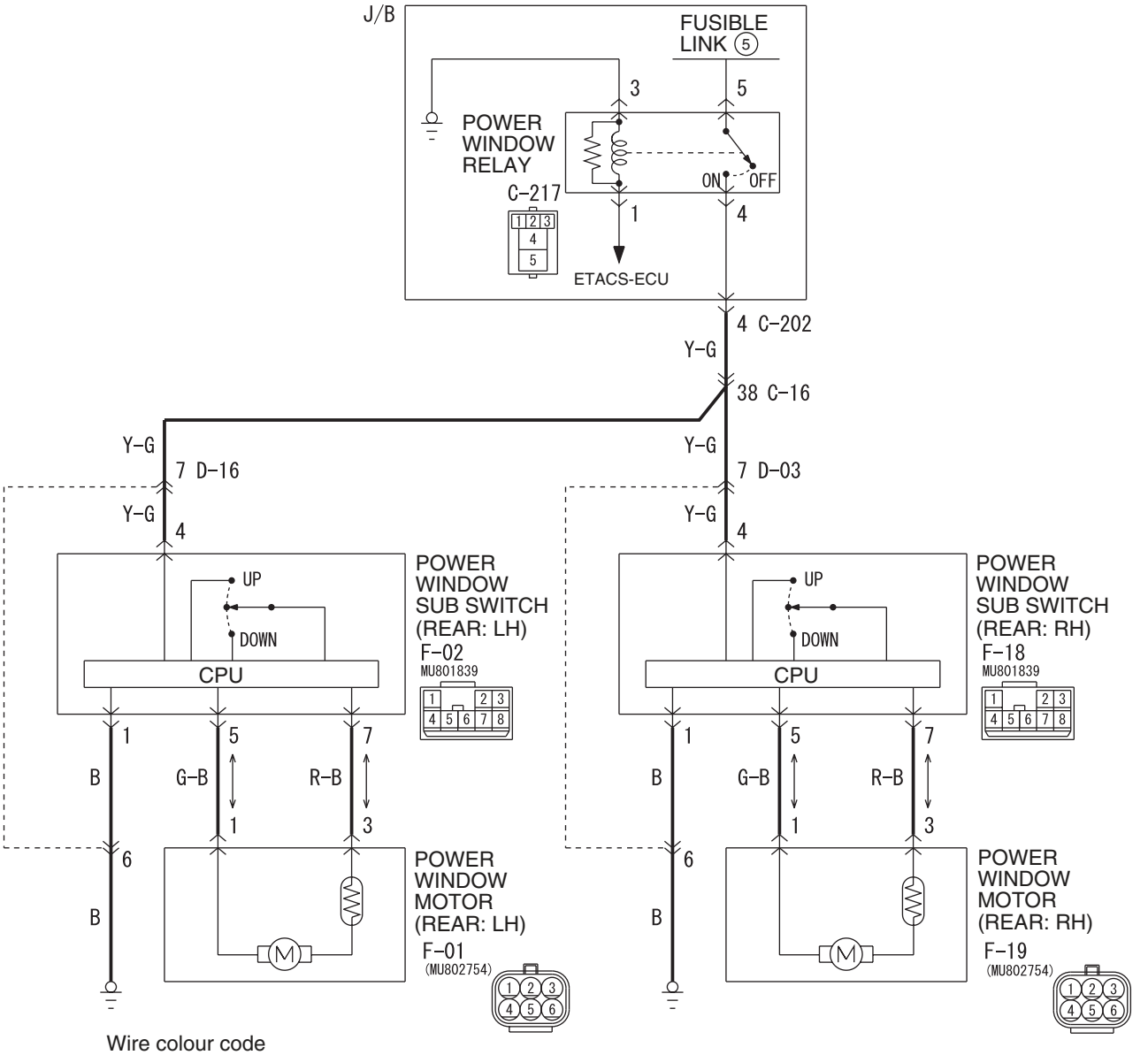


## COMMENTS ON TROUBLE SYMPTOM

If the front passenger's or rear power window does not work by means of the respective power window sub switch, the power window sub switch or the power window motor may be defective.

## POSSIBLE CAUSES

- Malfunction of the power window sub switch (front: LH), the power window sub switch (rear: RH) or the power window sub switch (rear: LH)
- Malfunction of the power window motor (front: LH), the power window motor (rear: RH) or the power window motor (rear: LH)
- Damaged harness wires and connectors

Main Index
Group TOC

## DIAGNOSIS PROCEDURE

**Step 1. Check the power window main switch.**
Check that the power window lock switch is turned off.

**Q: Is the check result normal?**
**YES :** Go to Step 2.
**NO :** Turn off the power window lock switch.

**Step 2. Determine a trouble spot.**

**Q: Which power window does not work?**
**Passenger's door :** Go to Step 3.
**Rear right door :** Go to Step 12.
**Rear left door :** Go to Step 21.

**Step 3. Connector check: F-26 power window sub switch (front: LH) connector.**

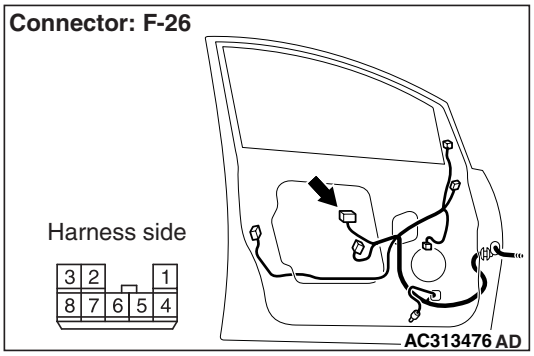


**Q: Is the check result normal?**
**YES :** Go to Step 4.
**NO :** Repair the connector.

**Step 4. Resistance measurement at the F-26 power window sub switch (front: LH) connector.**

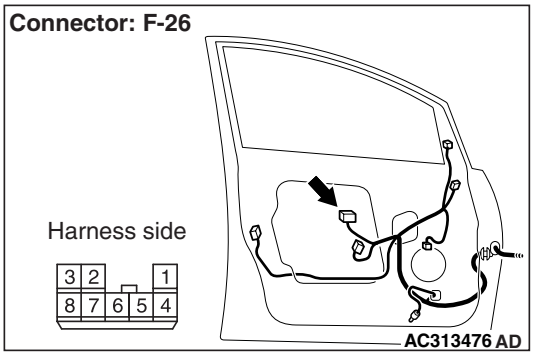


(1) Disconnect the connector, and measure at the wiring harness side.

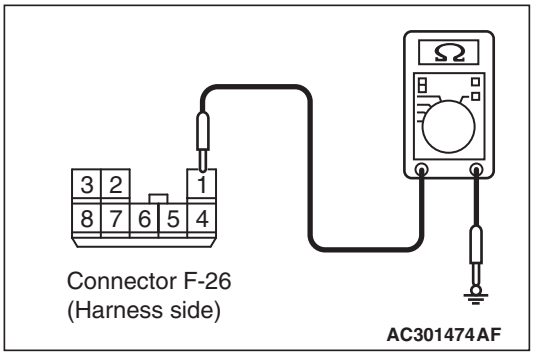


(2) Resistance between terminal 1 and body earth

**OK: 2Ω or less**

**Q: Is the check result normal?**
**YES :** Go to Step 6.
**NO :** Go to Step 5.

**Step 5. Check the wiring harness from F-26 power window sub switch (front: LH) terminal No.1 to body earth.**

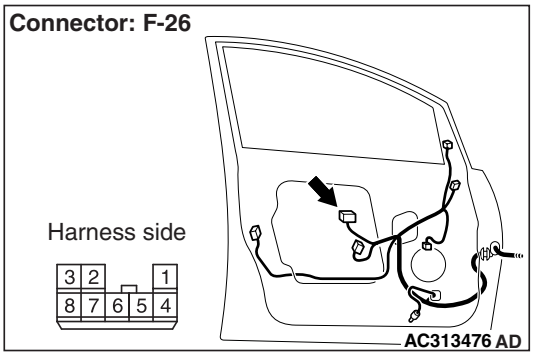


*NOTE:*

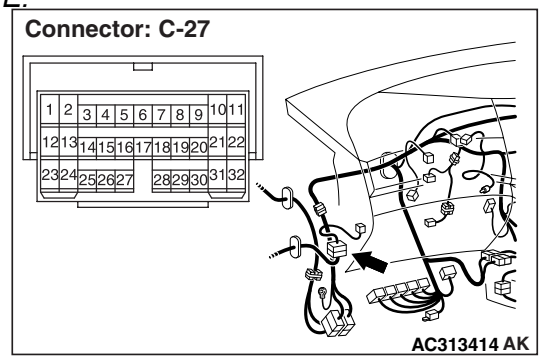


*Prior to the wiring harness inspection, check intermediate connector C-27 and repair if necessary.*

- Check the earth wires for open circuit.

**Q: Is the check result normal?**
**YES :** The trouble can be an intermittent malfunction (Refer to GROUP 00 – How to Cope with Intermittent Malfunction P.00-5).
**NO :** Repair the wiring harness.

Main Index
Group TOC

**Step 6. Voltage measurement at the F-26 power window sub switch (front: LH) connector.**

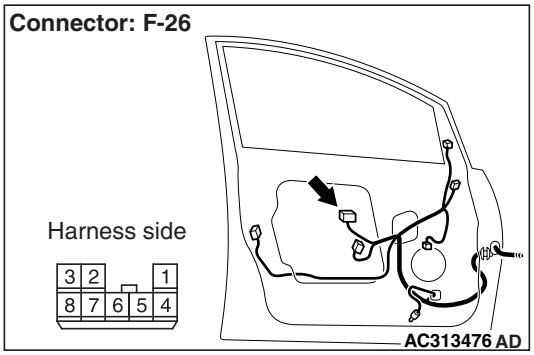


(1) Disconnect the connector, and measure at the wiring harness side.
(2) Turn the ignition switch to the ON position.

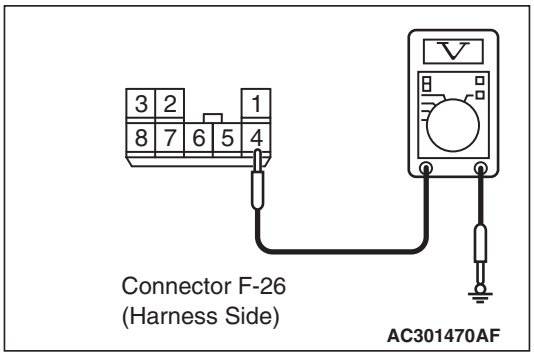


(3) Voltage between terminal 4 and body earth

**OK: System voltage**

**Q: Is the check result normal?**
**YES :** Go to Step 9.
**NO :** Go to Step 7.

**Step 7. Connector check: C-217 power window relay connector.**

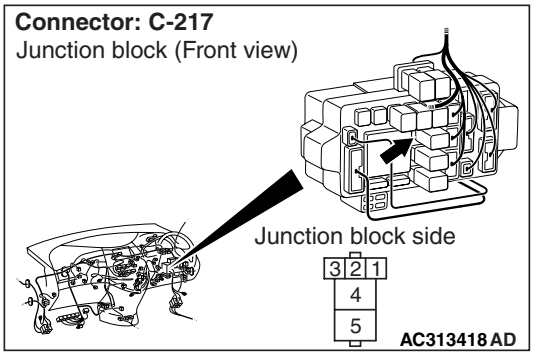


**Q: Is the check result normal?**
**YES :** Go to Step 8.
**NO :** Repair the connector.

**Step 8. Check the wiring harness from F-26 power window sub switch (front: LH) connector terminal No.4 to C-217 power window connector terminal No.4.**

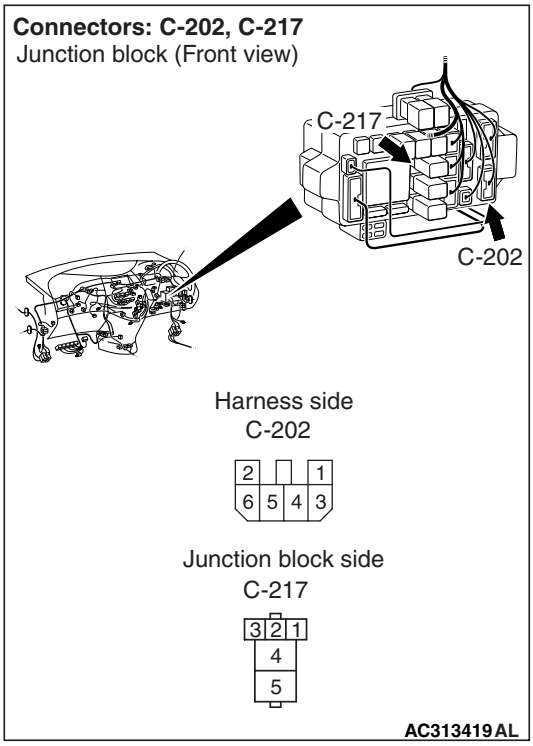


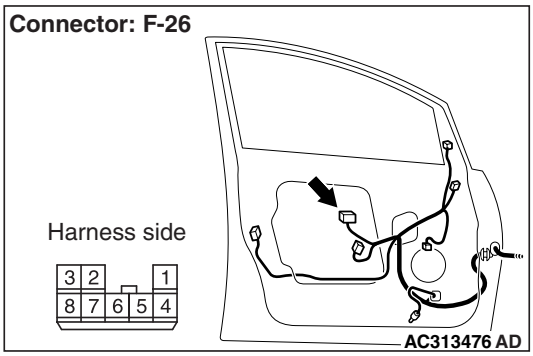


*NOTE:*

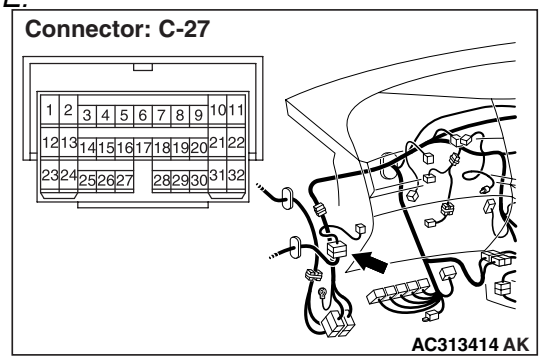


*Prior to the wiring harness inspection, check intermediate connectors C-27 and junction block connector C-202, and repair if necessary.*

- Check the power supply line for open circuit.

Main Index
Group TOC

**Q: Is the check result normal?**
**YES :** The trouble can be an intermittent malfunction (Refer to GROUP 00 – How to Cope with Intermittent Malfunction P.00-5).
**NO :** Repair the wiring harness.

### Step 9. Connector check: F-10 power window motor (front: LH) connector

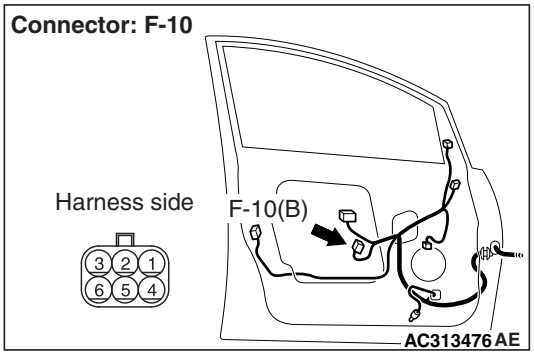


**Q: Is the check result normal?**
**YES :** Go to Step 10.
**NO :** Repair the connector.

### Step 10. Check the wiring harness from F-10 power window motor (front: LH) connector terminal Nos. 1 and 3 to F-26 power window sub switch (front: LH) connector terminal Nos. 5 and 7.

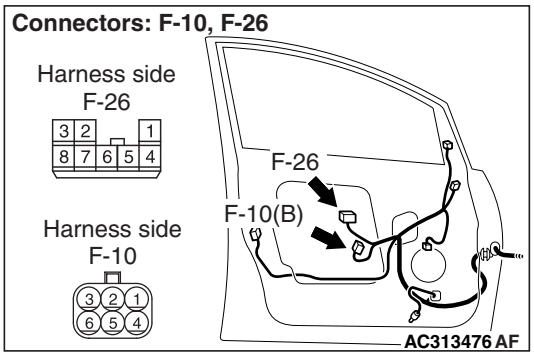


- Check the input and output lines for open or short circuit.

**Q: Is the check result normal?**
**YES :** Go to Step 11.
**NO :** Repair the wiring harness.

### Step 11. Retest the system.

After the power window sub switch (front: LH) is replaced, check that the front passenger's door power window can be operated by the power window sub switch (front: LH).
(1) Replace the power window sub switch (front: LH).
(2) Check that the front passenger's door power window can be operated by the power window sub switch (front: LH).

**Q: Is the check result normal?**
**YES :** The trouble can be an intermittent malfunction (Refer to GROUP 00 – How to Cope with Intermittent Malfunction P.00-5).
**NO :** Replace the power window motor assembly (front: LH).

### Step 12. Connector check: F-18 power window sub switch (rear: RH) connector.

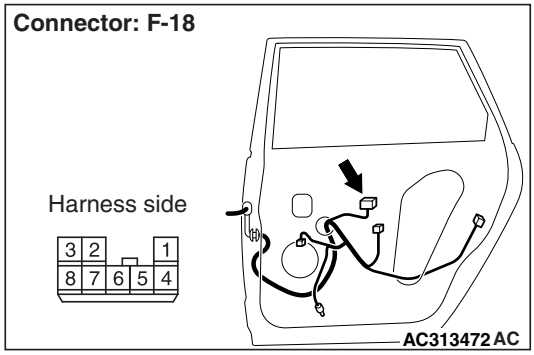


**Q: Is the check result normal?**
**YES :** Go to Step 13.
**NO :** Repair the connector.

### Step 13. Resistance measurement at the F-18 power window sub switch (rear: RH) connector.

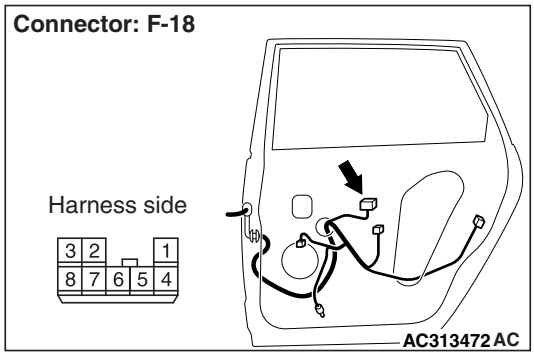


(1) Disconnect the connector, and measure at the wiring harness side.

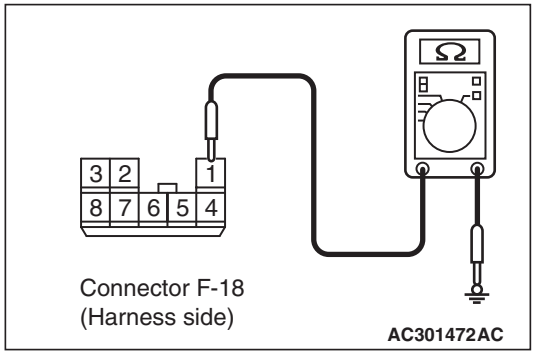


(2) Resistance between terminal 1 and body earth

**OK: 2Ω or less**

Main Index
Group TOC

**Q: Is the check result normal?**
**YES :** Go to Step 15.
**NO :** Go to Step 14.

**Step 14. Check the wiring harness from F-18 power window sub switch (rear: RH) connector terminal No.1 to body earth.**

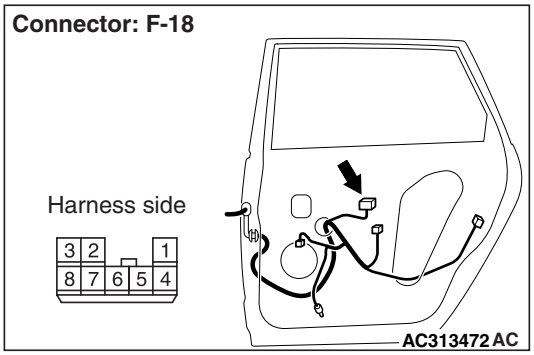


*NOTE:*

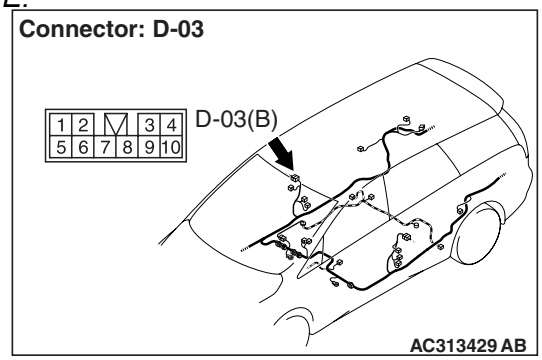


*Prior to the wiring harness inspection, check intermediate connectors D-03, and repair if necessary.*

- Check the earth wires for open circuit.

**Q: Is the check result normal?**
**YES :** The trouble can be an intermittent malfunction (Refer to GROUP 00 – How to Cope with Intermittent Malfunction P.00-5).
**NO :** Repair the wiring harness.

**Step 15. Voltage measurement at the F-18 power window sub switch (rear: RH) connector.**

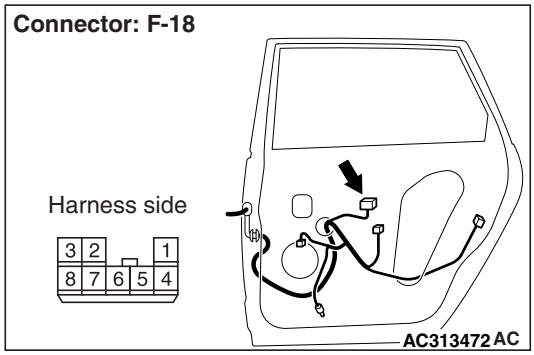


(1) Disconnect the connector, and measure at the wiring harness side.
(2) Turn the ignition switch to the ON position.

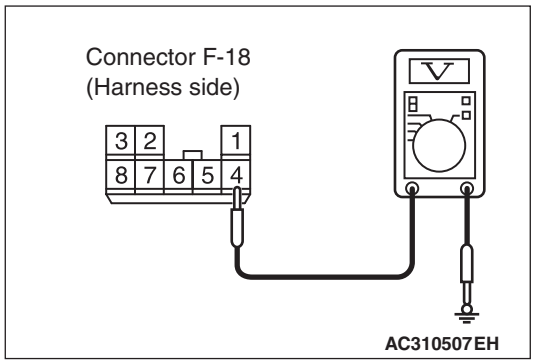


(3) Voltage between terminal 4 and body earth

**OK: System voltage**

**Q: Is the check result normal?**
**YES :** Go to Step 18.
**NO :** Go to Step 16.

**Step 16. Connector check: C-217 power window relay connector.**

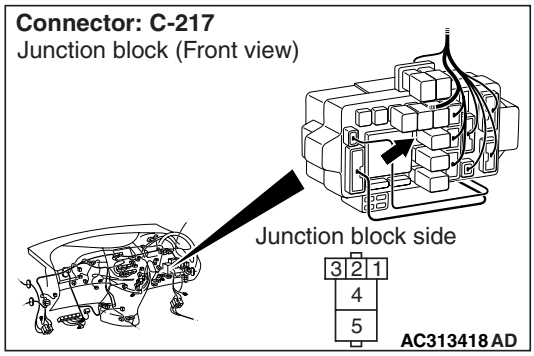


**Q: Is the check result normal?**
**YES :** Go to Step 17.
**NO :** Repair the connector.

Main Index
Group TOC

**Step 17. Check the wiring harness from F-18 power window sub switch (rear: RH) connector terminal No.4 to C-217 power window relay connector terminal No.4.**

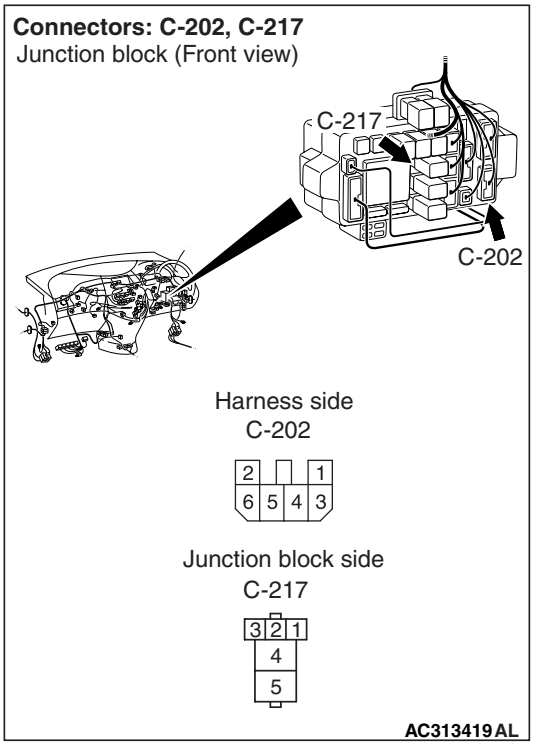


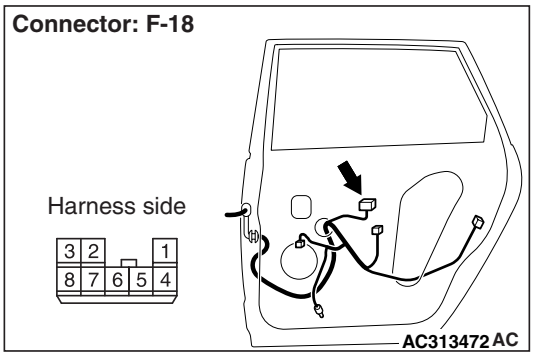


*NOTE:*

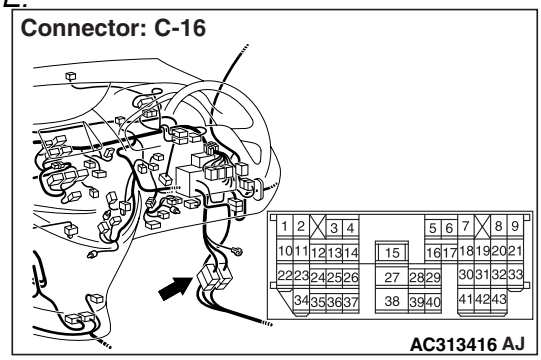


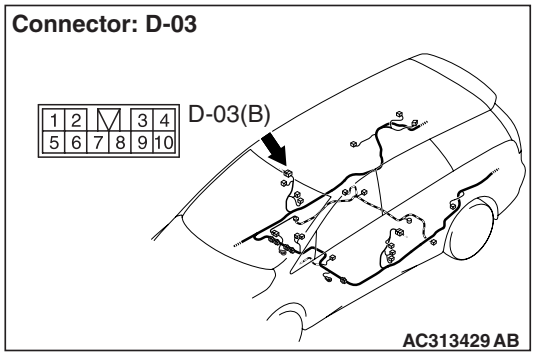


*Prior to the wiring harness inspection, check intermediate connectors C-16, D-03 and junction block connector C-202, and repair if necessary.*

- Check the power supply line for open circuit.

**Q: Is the check result normal?**

**YES :** The trouble can be an intermittent malfunction (Refer to GROUP 00 – How to Cope with Intermittent Malfunction P.00-5).

**NO :** Repair the wiring harness.

**Step 18. Connector check: F-19 power window motor (rear: RH) connector.**

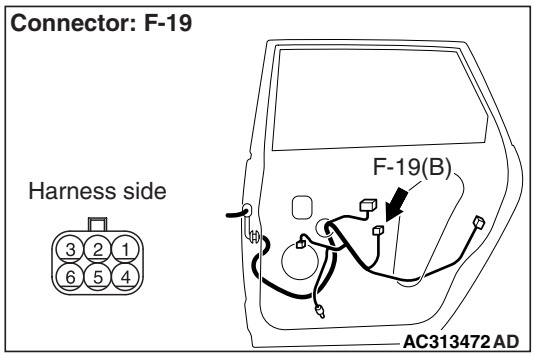


**Q: Is the check result normal?**

**YES :** Go to Step 19.

**NO :** Repair the connector.

Main Index
Group TOC

**Step 19. Check the wiring harness from F-19 power window motor (rear: RH) connector terminal Nos. 1 and 3 to F-18 power window sub switch (rear: RH) connector terminal Nos. 5 and 7.**

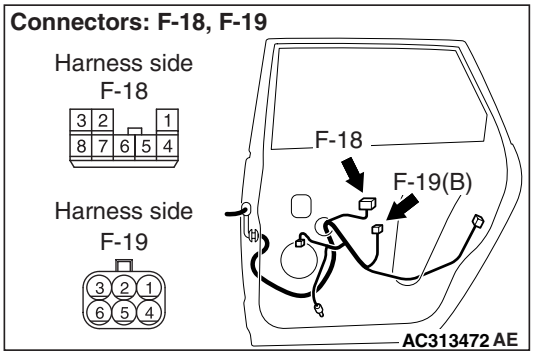


- Check the input and output lines for open or short circuit.

**Q: Is the check result normal?**
**YES :** Go to Step 20.
**NO :** Repair the wiring harness.

**Step 20. Retest the system.**

After the power window sub switch (rear: RH) is replaced, check that the rear right door power window can be operated by the power window sub switch (rear: RH).

(1) Replace the power window sub switch (rear: RH).
(2) Check that the rear right door power window can be operated by the power window sub switch (rear: RH).

**Q: Is the check result normal?**
**YES :** The trouble can be an intermittent malfunction (Refer to GROUP 00 – How to Cope with Intermittent Malfunction P.00-5).
**NO :** Replace the power window motor assembly (rear: RH).

**Step 21. Connector check: F-02 power window sub switch (rear: LH) connector.**

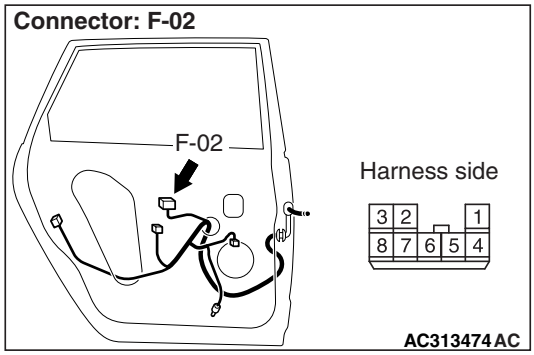


**Q: Is the check result normal?**
**YES :** Go to Step 22.
**NO :** Repair the connector.

**Step 22. Resistance measurement at the F-02 power window sub switch (rear: LH) connector.**

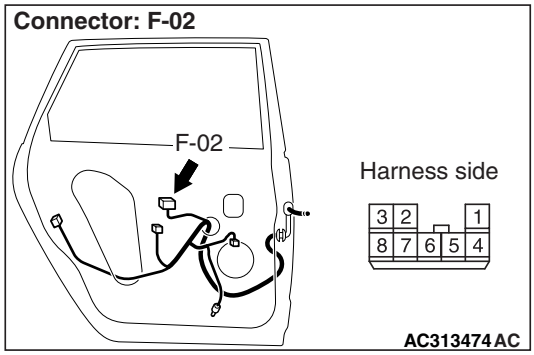


(1) Disconnect the connector, and measure at the wiring harness side.

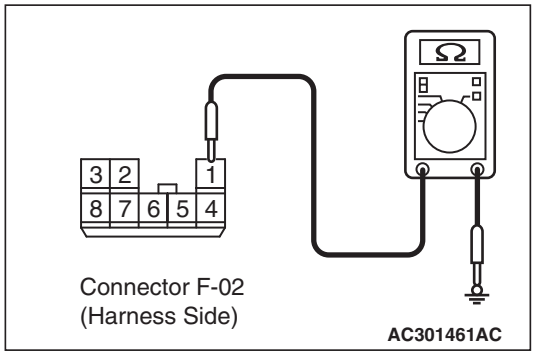


(2) Resistance between terminal 1 and body earth

**OK: 2Ω or less**

**Q: Is the check result normal?**
**YES :** Go to Step 24.
**NO :** Go to Step 23.

Main Index
Group TOC

**Step 23. Check the wiring harness from F-02 power window sub switch (rear: LH) connector terminal No.1 to body earth.**

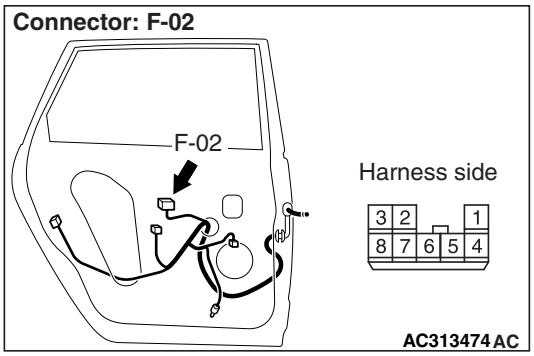


*NOTE:*

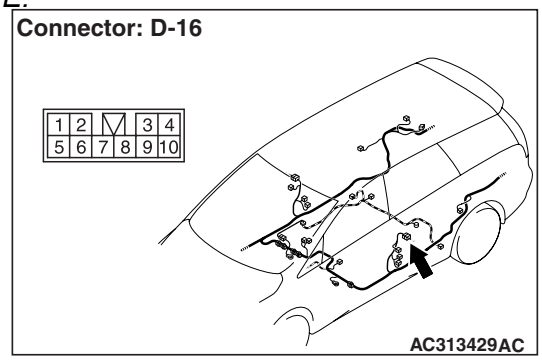


*Prior to the wiring harness inspection, check intermediate connectors D-16, and repair if necessary.*

- Check the earth wires for open circuit.

**Q: Is the check result normal?**

**YES :** The trouble can be an intermittent malfunction (Refer to GROUP 00 – How to Cope with Intermittent Malfunction P.00-5).

**NO :** Repair the wiring harness.

**Step 24. Voltage measurement at the F-02 power window sub switch (rear: LH) connector.**

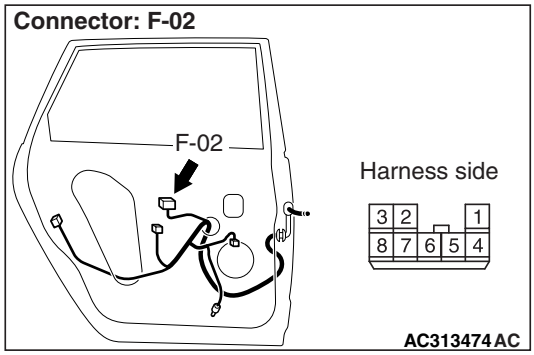


(1) Disconnect the connector, and measure at the wiring harness side.

(2) Turn the ignition switch to the ON position.

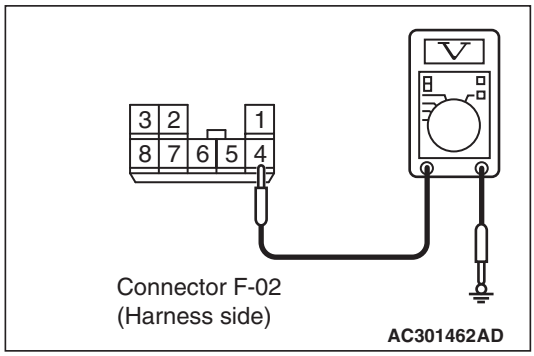


(3) Voltage between terminal 4 and body earth

**OK: System voltage**

**Q: Is the check result normal?**

**YES :** Go to Step 27.

**NO :** Go to Step 25.

**Step 25. C-217 power window relay connector.**

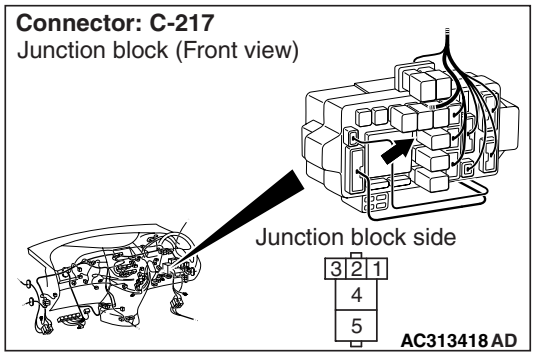


**Q: Is the check result normal?**

**YES :** Go to Step 26.

**NO :** Repair the connector.

Main Index
Group TOC

**Step 26. Check the wiring harness from F-02 power window sub switch (rear: LH) connector terminal No.4 to C-217 power window connector terminal No.4.**

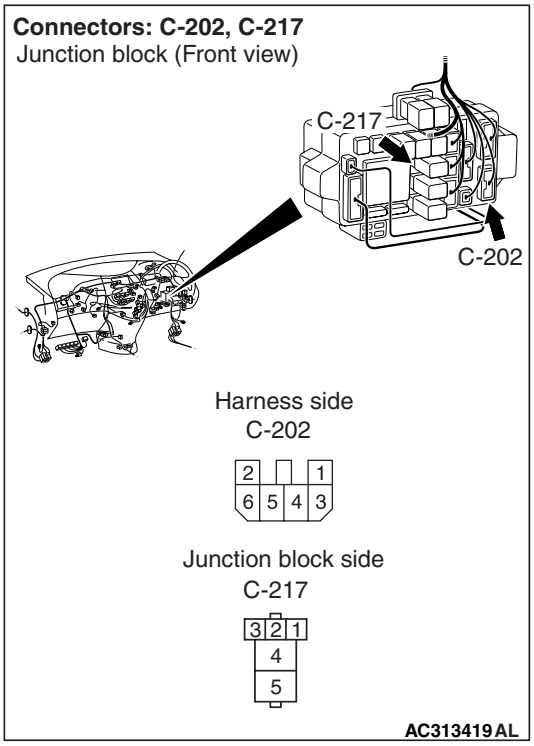


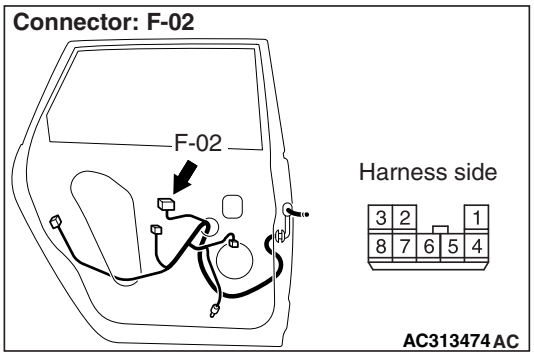


*NOTE:*

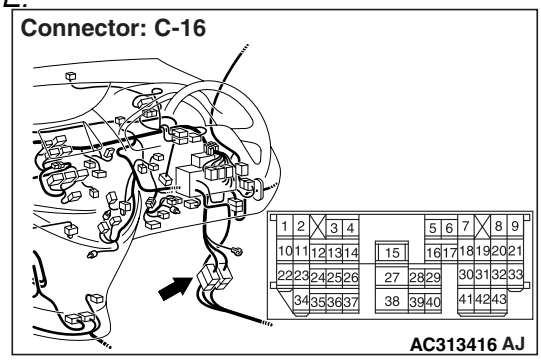


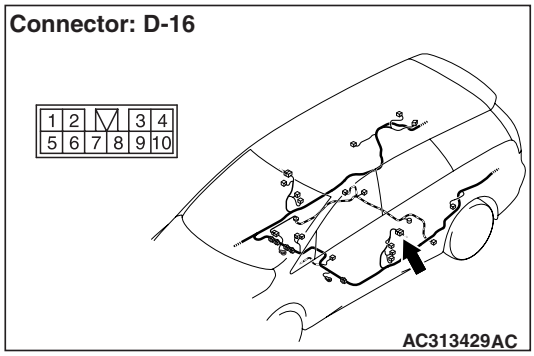


*Prior to the wiring harness inspection, check intermediate connectors C-16, D-16 and junction block connector C-202, and repair if necessary.*

- Check the power supply line for open circuit.

**Q: Is the check result normal?**

**YES :** The trouble can be an intermittent malfunction (Refer to GROUP 00 – How to Cope with Intermittent Malfunction P.00-5).

**NO :** Repair the wiring harness.

**Step 27. Connector check: F-01 power window motor (rear: LH) connector.**

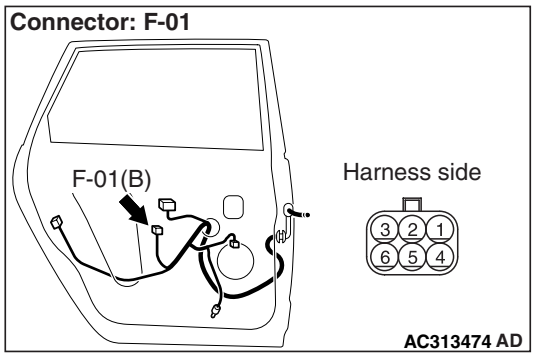


**Q: Is the check result normal?**

**YES :** Go to Step 28.

**NO :** Repair the connector.

Main Index
Group TOC

**Step 28. Check the wiring harness from F-01 power window motor (rear: LH) connector terminal Nos. 1 and 3 to F-02 power window sub switch (rear: LH) connector terminal Nos. 5 and 7.**

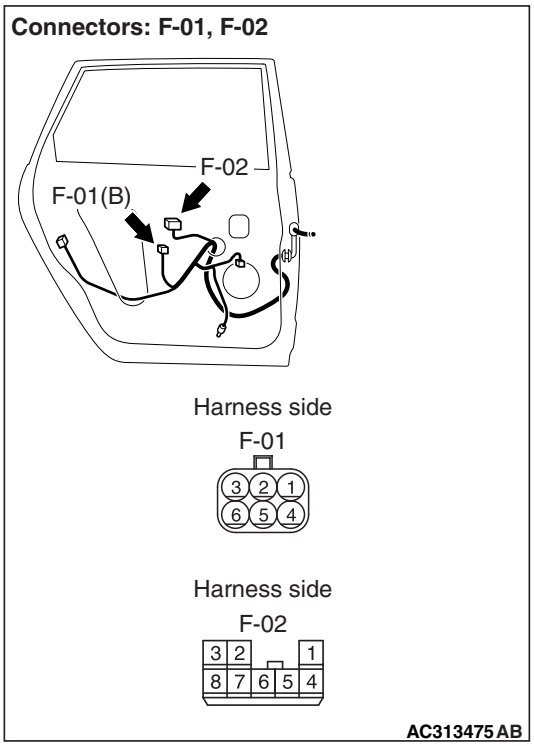


- Check the input and output lines for open or short circuit.

**Q: Is the check result normal?**
**YES :** Go to Step 29.
**NO :** Repair the wiring harness.

**Step 29. Retest the system.**
After the power window sub switch (rear: LH) is replaced, check that the rear left door power window can be operated by the power window sub switch (rear: LH).
(1) Replace the power window sub switch (rear: LH).
(2) Check that the rear left door power window can be operated by the power window sub switch (rear: LH).

**Q: Is the check result normal?**
**YES :** The trouble can be an intermittent malfunction (Refer to GROUP 00 – How to Cope with Intermittent Malfunction P.00-5).
**NO :** Replace the power window motor (rear: LH).

Main Index
Group TOC

## INSPECTION PROCEDURE D-4: Passenger's and/or rear power window(s) do not work by means of the power window main switch.

**Power Window Circuit**

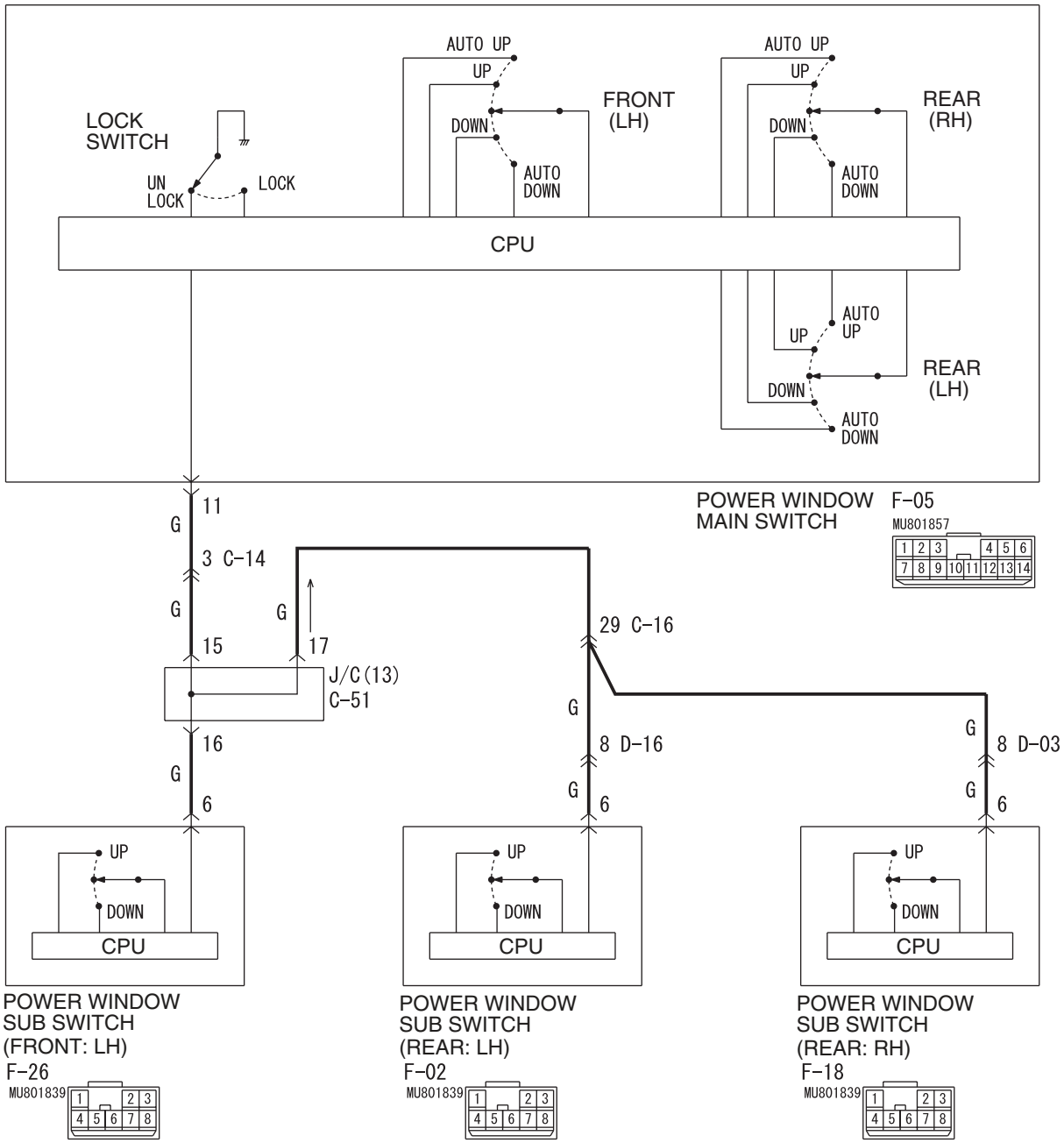


Wire colour code
B : Black LG : Light green G : Green L : Blue W : White Y : Yellow SB : Sky blue
BR : Brown O : Orange GR : Grey R : Red P : Pink V : Violet PU : Purple

W6X54X051A

## COMMENTS ON TROUBLE SYMPTOM

If the passenger's and/or rear power window does not work by means of the power window main switch, the power window main switch or the respective power window sub switch(es) may be defective.

Main Index
Group TOC

## POSSIBLE CAUSES

- Malfunction of the power window main switch
- Malfunction of the power window sub switch (front: LH), power window sub switch (rear: RH) or power window sub switch (rear: LH)
- Damaged harness wires and connectors

## DIAGNOSIS PROCEDURE

**Step 1. ECU check by using the SWS monitor.**
Check that the power supply and earth lines to the power window main switch (power window module) and the SWS communication lines are normal.

- Turn the ignition switch to the ON position.

**ECUS TO BE CHECKED**

- P/W MODULE

**OK: "OK" is displayed on the "P/W MODULE" menu.**

**Q: Is the check result normal?**
**YES :** Go to Step 2.
**NO :** Refer to Inspection Procedure A-5 "Communication with the power window main switch (power window module) is not possible P.54E-64."

**Step 2. Check the power window sub switch.**
Check that each power window works by means of the respective power window sub switch when the power window lock switch is turned off.

**Q: Is the check result normal?**
**YES :** Go to Step 3.
**NO :** Refer to inspection procedure D-3 "Relevant power window(s) do not work by means of the front and rear power window sub switches P.54E-103."

**Step 3. Confirm communication data by using the SWS monitor.**
Check the SWS communication signal from the power window lock switch to the ETACS-ECU.

**<Selected item> DOOR CNT. COM.**

- Insert a probe between a power window sub switch of a door of which power window does not work and the power window main switch (For the insertion point, refer to P.54E-6).
- Turn the ignition switch to the ON position.
- Power window lock switch: OFF

| Item No. | Item name | Normal condition |
|---|---|---|
| Item CB | P/W LOCK SW | OFF |

**OK: Normal condition is displayed.**

**Q: Is the check result normal?**
**YES :** Go to Step 4.
**NO :** Replace the power window main switch.

**Step 4. Confirm communication data by using the SWS monitor.**
Check the SWS communication signals, which are used when the front and/or rear passenger's door power windows are operated by the power window main switch.

**<Selected item> DOOR CNT. COM.**

- Insert a probe between a power window sub switch of a door of which power window does not work and the power window main switch (For the insertion point, refer to P.54E-6).
- Turn the ignition switch to the ON position.
- Are normal conditions displayed when each switch of the power window main switch is operated?

| Item No. | Item name | Normal condition |
|---|---|---|
| Item C0 | Pass door UP SW | ON |
| Item C1 | Pas door DOWN SW | ON |
| Item C2 | Pas door AUTO SW | ON |
| Item C4 | Rear RH UP SW | ON |
| Item C5 | Rear RH DOWN SW | ON |
| Item C6 | Rear RH AUTO SW | ON |
| Item C8 | Rear LH UP SW | ON |
| Item C9 | Rear LH DOWN SW | ON |
| Item CA | Rear LH AUTO SW | ON |

**OK: Normal conditions are displayed for all the items.**

Main Index
Group TOC

**Q: Is the check result normal?**

**Normal conditions are displayed for all of items C0, C1 and C2 when the front passenger's power window does not work. :** Go to Step 7.

**Normal conditions are displayed for none of items C0, C1 and C2 when the front passenger's power window does not work. :** Go to Step 5.

**Normal conditions are displayed for all of items C4, C5 and C6 when the rear right power window does not work. :** Go to Step 13.

**Normal conditions are displayed for none of items C4, C5 and C6 when the rear right power window does not work. :** Go to Step 11.

**Normal conditions are displayed for all of items C8, C9 and CA when the rear left power window does not work. :** Go to Step 19.

**Normal conditions are displayed for none of items C8, C9 and CA when the rear left power window does not work. :** Go to Step 17.

**Normal condition is displayed for any of the items. :** Replace the power window main switch.

## Step 5. Connector check: F-05 power window main switch connector.

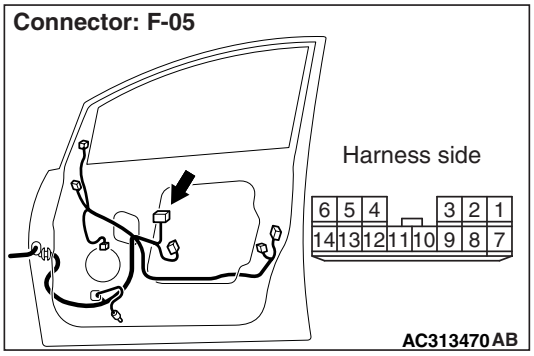


**Q: Is the check result normal?**

**YES :** Go to Step 6.

**NO :** Repair the connector.

## Step 6. Check the wiring harness from F-05 power window main switch connector terminal No.11 to the inserted probe.

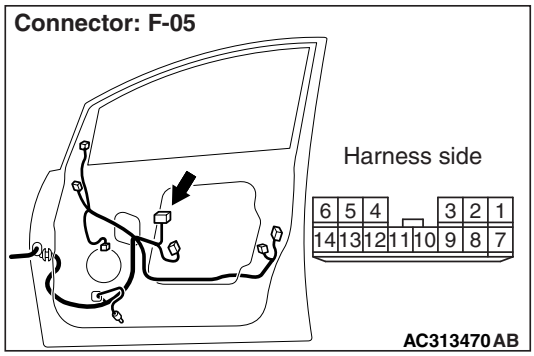


*NOTE:*

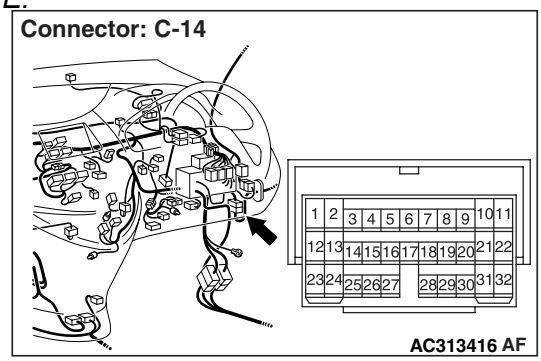


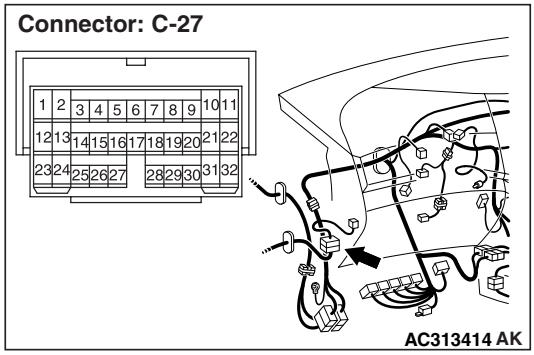


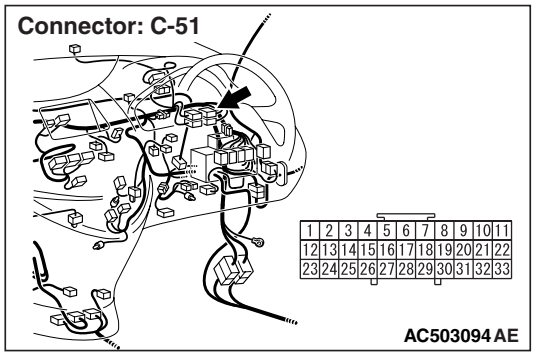


*Prior to the wiring harness inspection, check intermediate connectors C-14, C-27 and joint connector C-51, and repair if necessary.*

- Check the communication lines for open circuit.

**Q: Is the check result normal?**

**YES :** Go to Step 9.

**NO :** Repair the wiring harness.

Main Index
Group TOC

**Step 7. Connector check: F-26 power window sub switch (front: LH) connector.**

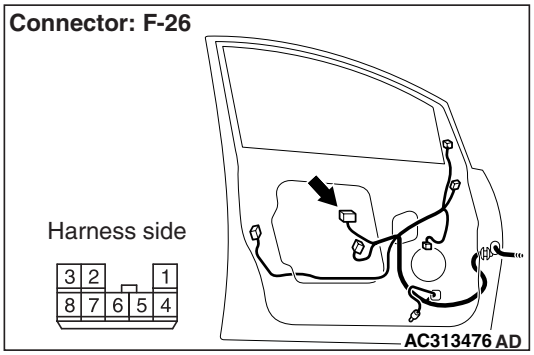


**Q: Is the check result normal?**
**YES :** Go to Step 8.
**NO :** Repair the connector.

**Step 8. Check the wiring harness from F-26 power window sub switch (front: LH) connector terminal No.6 to the inserted probe.**

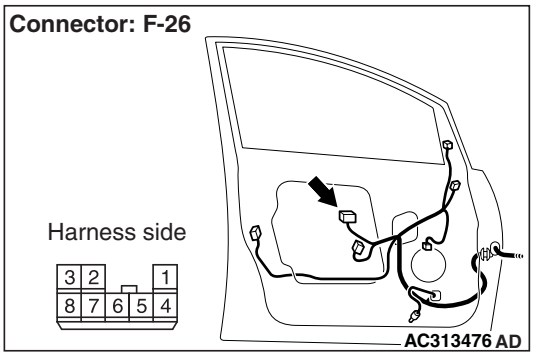


*NOTE:*

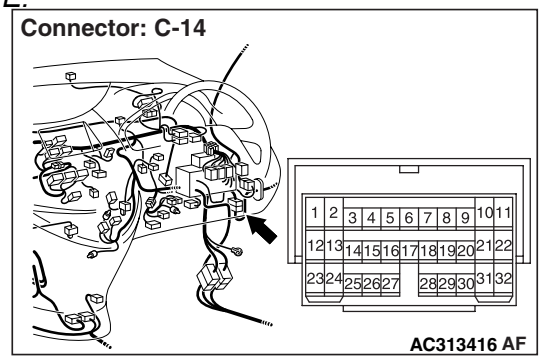


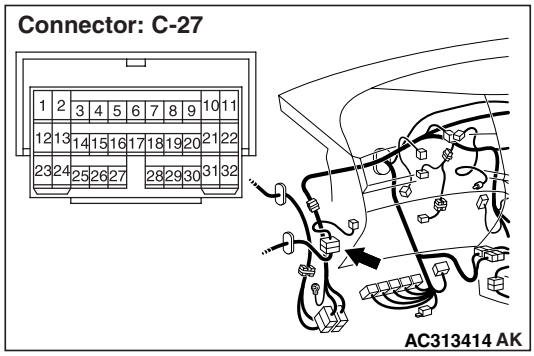


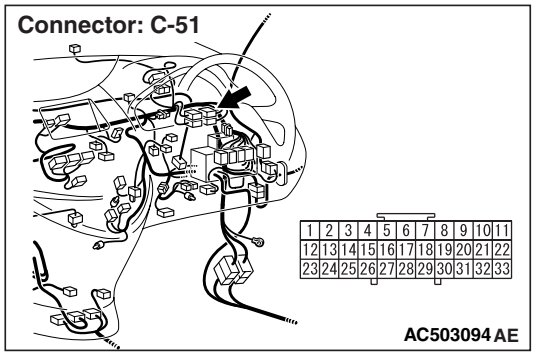


*Prior to the wiring harness inspection, check intermediate connectors C-14, C-27 and joint connector C-51, and repair if necessary.*

- Check the communication lines for open circuit.

**Q: Is the check result normal?**
**YES :** Go to Step 9.
**NO :** Repair the wiring harness.

**Step 9. Check the power window sub switch.**

Check that the front passenger's power window works by means of the power window sub switch (front: LH) when the power window lock switch is turned off.

**Q: Is the check result normal?**
**YES :** Go to Step 10.
**NO :** Refer to inspection procedure D-3 "Relevant power window(s) do not work by means of the front and rear power window sub switches P.54E-103."

Main Index
Group TOC

**Step 10. Retest the system.**

After the power window sub switch (front: LH) is replaced, check that the front passenger's door power window can be operated by the power window sub switch.

(1) Replace the power window sub switch (front: LH).
(2) Check that the front passenger's power window works by means of the power window main switch.

**Q: Is the check result normal?**
**YES :** The trouble can be an intermittent malfunction (Refer to GROUP 00 – How to Cope with Intermittent Malfunction P.00-5).
**NO :** Replace the power window main switch.

**Step 11. Connector check: F-05 power window main switch connector.**

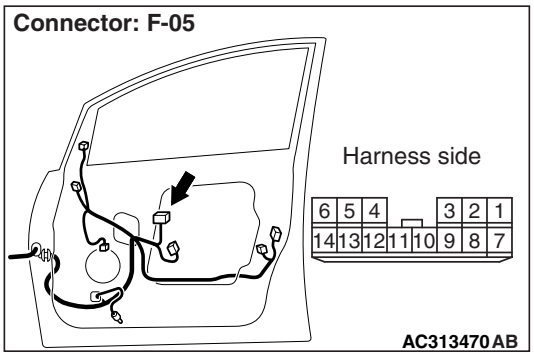


**Q: Is the check result normal?**
**YES :** Go to Step 12.
**NO :** Repair the connector.

**Step 12. Check the wiring harness from F-05 power window main switch connector terminal No.11 to the inserted probe.**

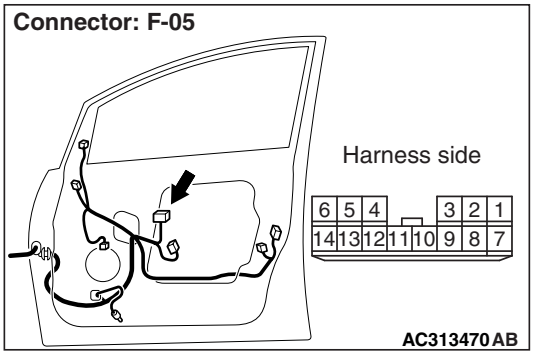


*NOTE:*

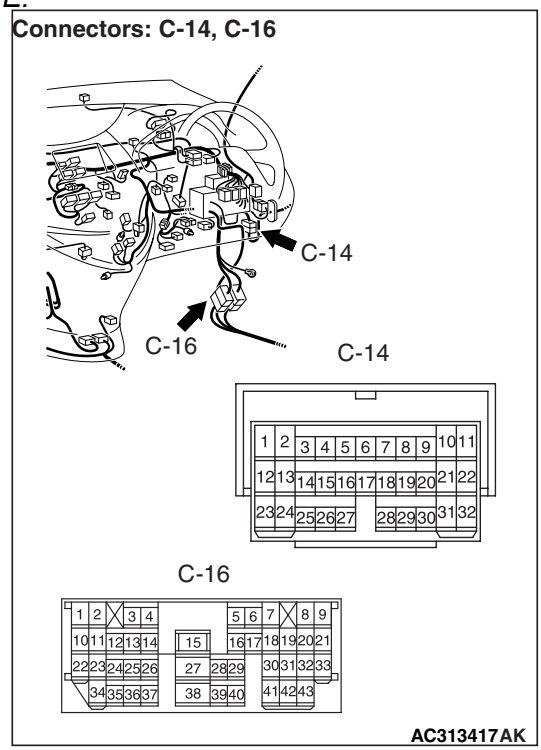


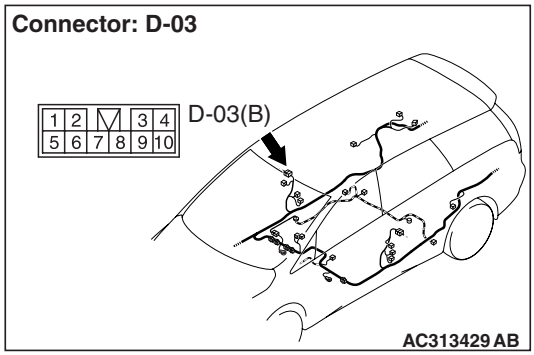


*Prior to the wiring harness inspection, check intermediate connectors C-16, C-14 and D-03, and repair if necessary.*

- Check the communication lines for open circuit.

**Q: Is the check result normal?**
**YES :** Go to Step 15.
**NO :** Repair the wiring harness.

Main Index
Group TOC

**Step 13. Connector check: F-18 power window sub switch (rear RH) connector.**

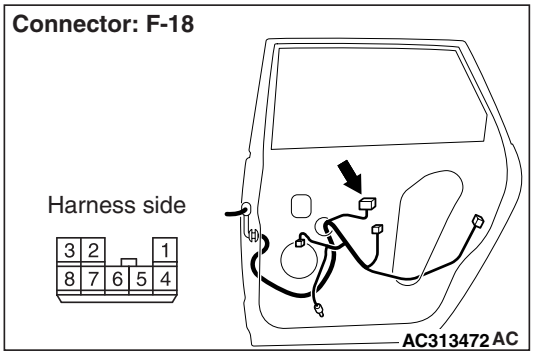


**Q: Is the check result normal?**
**YES :** Go to Step 14.
**NO :** Repair the connector.

**Step 14. Check the wiring harness from F-18 power window sub switch (rear: RH) connector terminal No.6 to the inserted probe.**

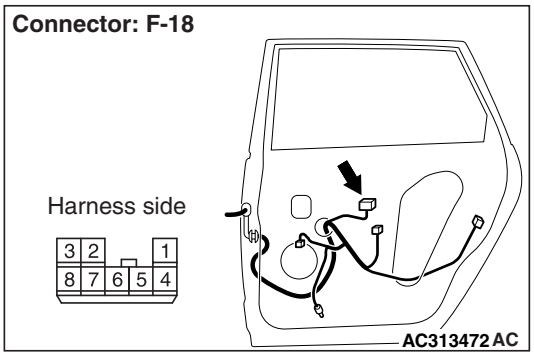


*NOTE:*

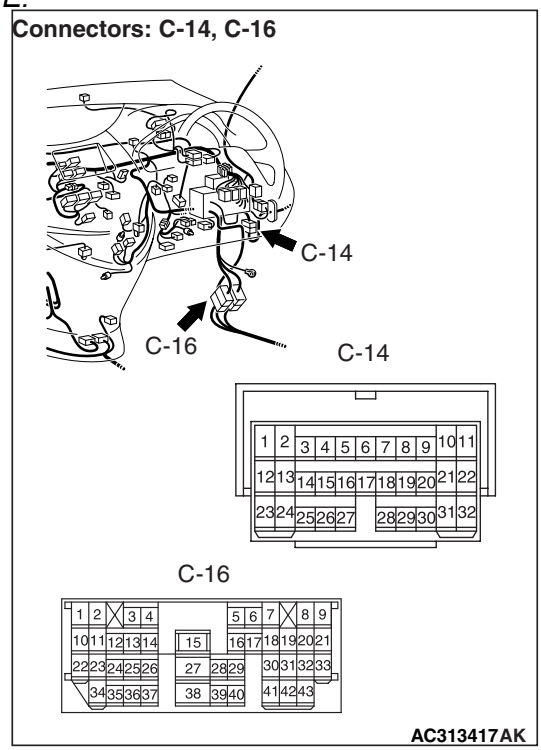


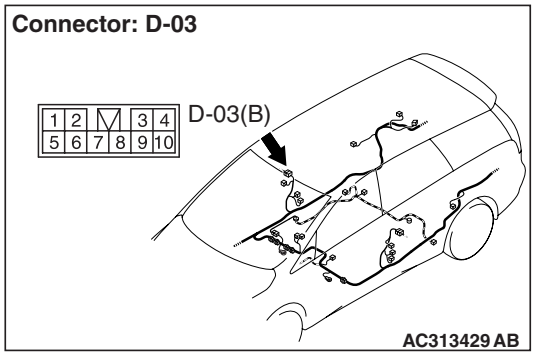


*Prior to the wiring harness inspection, check intermediate connectors C-16, C-14 and D-03, and repair if necessary.*

- Check the communication lines for open circuit.

**Q: Is the check result normal?**
**YES :** Go to Step 15.
**NO :** Repair the wiring harness.

**Step 15. Check the power window sub switch.**
Check that the rear right power window works by means of the power window sub switch (rear: RH) when the power window lock switch is turned off.

**Q: Is the check result normal?**
**YES :** Go to Step 16.
**NO :** Refer to inspection procedure D-3 "Relevant power window(s) do not work by means of the front and rear passenger's power window sub switches P.54E-103."

Main Index
Group TOC

**Step 16. Retest the system.**

After the power window sub switch (rear: RH) is replaced, check that the rear right door power window can be operated by the power window sub switch.

(1) Replace the power window sub switch (rear: RH).
(2) Check that the rear right power window works by means of the power window main switch.

**Q: Is the check result normal?**
**YES :** The trouble can be an intermittent malfunction (Refer to GROUP 00 – How to Cope with Intermittent Malfunction P.00-5).
**NO :** Replace the power window main switch.

**Step 17. Connector check: F-05 power window main switch connector.**

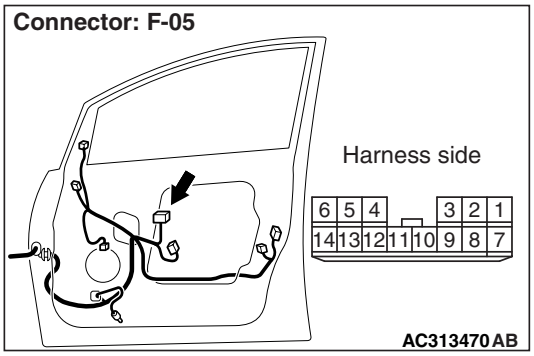


**Q: Is the check result normal?**
**YES :** Go to Step 18.
**NO :** Repair the connector.

**Step 18. Check the wiring harness from F-05 power window main switch connector terminal No.11 to the inserted probe.**

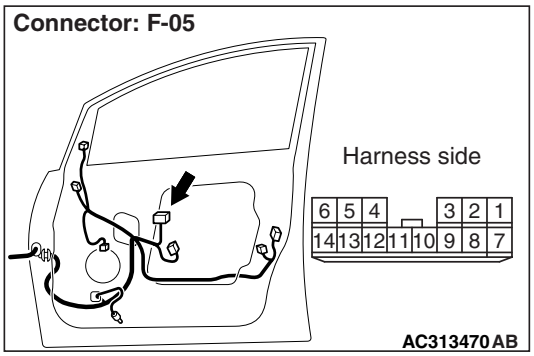


*NOTE:*

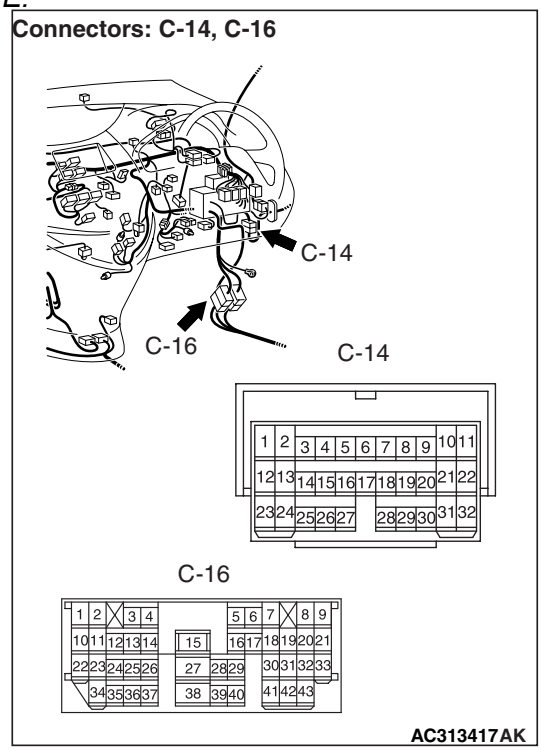


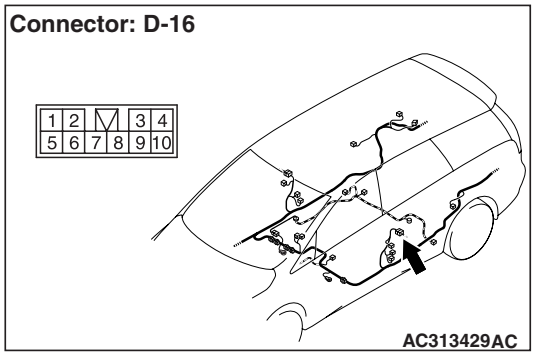


*Prior to the wiring harness inspection, check intermediate connectors C-16, C-14 and D-16, and repair if necessary.*

- Check the communication lines for open circuit.

**Q: Is the check result normal?**
**YES :** Go to Step 21.
**NO :** Repair the wiring harness.

Main Index
Group TOC

**Step 19. Connector check: F-02 power window sub switch (rear: LH) connector.**

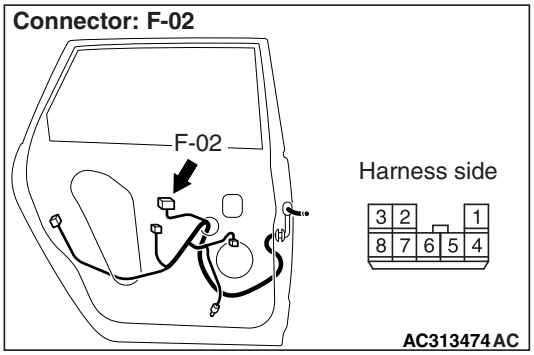


**Q: Is the check result normal?**
**YES :** Go to Step 20.
**NO :** Repair the connector.

**Step 20. Check the wiring harness from F-02 power window sub switch (rear: LH) connector terminal No.6 to the inserted probe.**

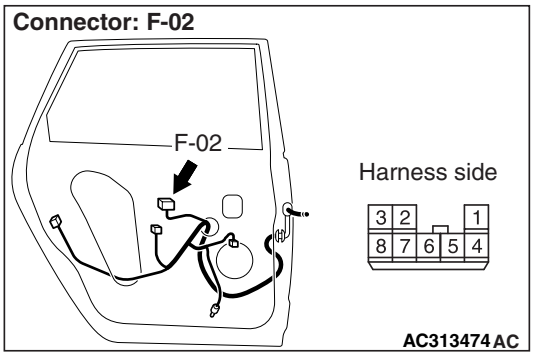


*NOTE:*

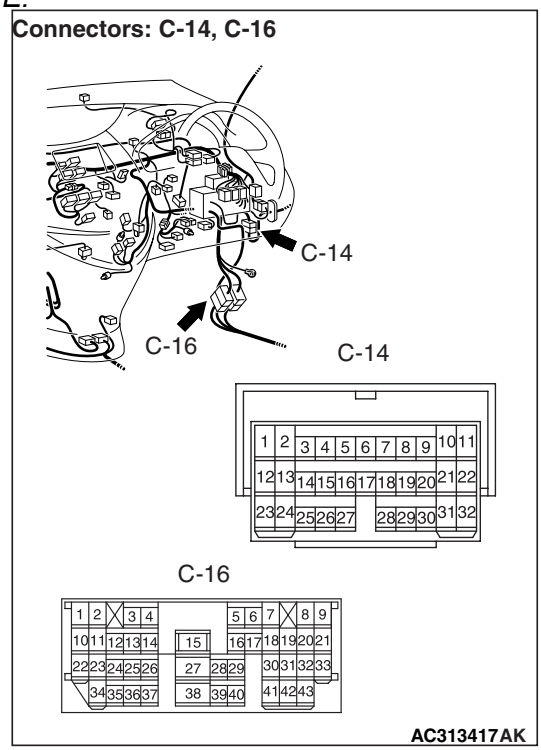


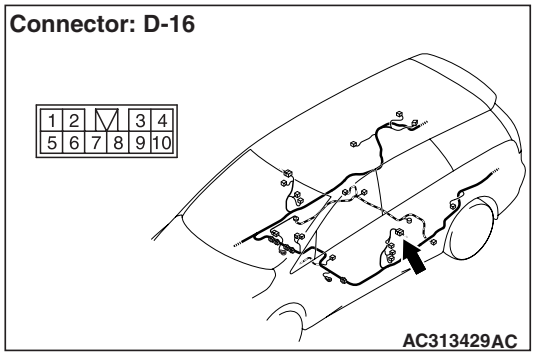


*Prior to the wiring harness inspection, check intermediate connectors C-16, C-14 and D-16, and repair if necessary.*

- Check the communication lines for open circuit.

**Q: Is the check result normal?**
**YES :** Go to Step 21.
**NO :** Repair the wiring harness.

**Step 21. Check the power window sub switch.**
Check that the rear left power window works by means of the power window sub switch (rear: LH) when the power window lock switch is turned off.

**Q: Is the check result normal?**
**YES :** Go to Step 22.
**NO :** Refer to inspection procedure D-3 "Relevant power window(s) do not work by means of the front and rear passenger's power window sub switches P.54E-103."

Main Index
Group TOC

**Step 22. Retest the system.**
After the power window sub switch (rear: LH) is replaced, check that the rear left door power window can be operated by the power window sub switch.
(1) Replace the power window sub switch (rear: LH).
(2) Check that the rear left power window works by means of the power window main switch.

**Q: Is the check result normal?**
**YES :** The trouble can be an intermittent malfunction (Refer to GROUP 00 – How to Cope with Intermittent Malfunction P.00-5).
**NO :** Replace the power window main switch.

**INSPECTION PROCEDURE D-5: The window glass lowers automatically while it is rising.**

## COMMENTS ON TROUBLE SYMPTOM

If the sliding resistance is too great when the window is being raised or the window glass encounters an object, the window glass will lower by approximately 150 mm.

## POSSIBLE CAUSES

- Improper adjusted door window glass
- Incorrectly installed or warped glass slider
- Malfunction of the power window motor
- Malfunction of the window regulator

## DIAGNOSIS PROCEDURE

**Step 1. Check the power window anti-trap function.**
Check that the power window anti-trap function works. Refer to GROUP 42 – Door – On-vehicle Service P.42-31.

**Q: Is the check result normal?**
**YES :** Go to Step 2.
**NO :** Refer to Inspection Procedure D-6 "Power window anti-trap function does not work normally P.54E-123."

**Step 2. Check the power window operating current.**
Check that the power window operating current is normal (Refer to GROUP 42 – Door – On-vehicle service P.42-31).

**Q: Is the check result normal?**
**YES :** Adjust the door window glass (Refer to GROUP 42 – Door – On-vehicle service P.42-29), and then go to Step 3.
**NO :** Replace the defective power window motor assembly which operating current are abnormal.

**Step 3. Check that the door window glasses are installed correctly.**
Check that the door window glasses are installed correctly. Refer to GROUP 42 – Door – On-vehicle Service P.42-29.

**Q: Is the check result normal?**
**YES :** Go to Step 4.
**NO :** Adjust the door window glass (Refer to GROUP 42 – Door – On-vehicle service P.42-29).

**Step 4. Retest the system.**
Check that the power window does not lower automatically while it is being raised.

**Q: Is the check result normal?**
**YES :** The trouble can be an intermittent malfunction (Refer to GROUP 00 – How to Cope with Intermittent Malfunction P.00-5).
**NO :** Replace the power window motor assembly of the defective window.

Main Index
Group TOC

## INSPECTION PROCEDURE D-6: Power window anti-trap function does not work normally.

**Power Window (front) Circuit**

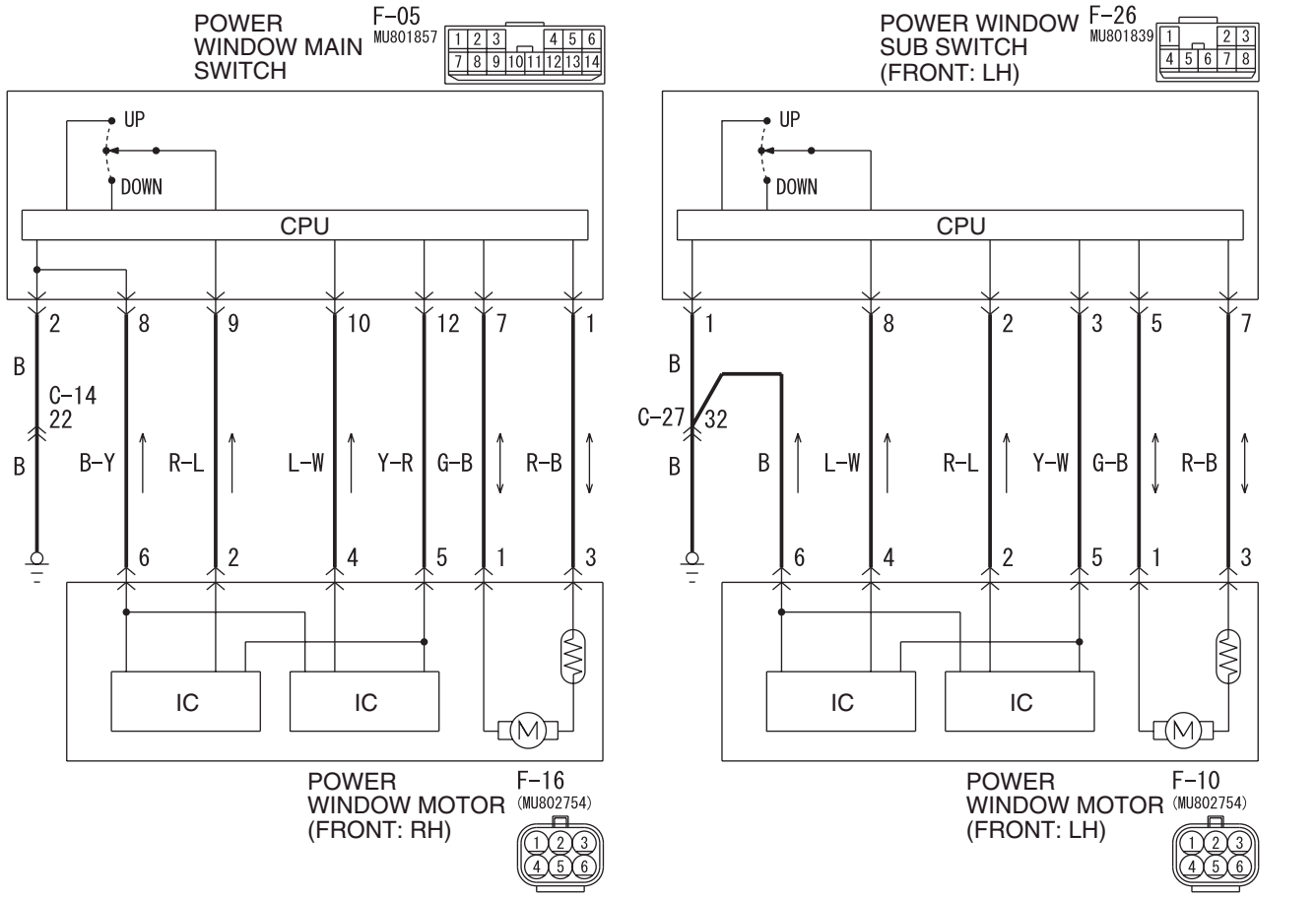


Wire colour code
B : Black LG : Light green G : Green L : Blue W : White Y : Yellow SB : Sky blue
BR : Brown O : Orange GR : Grey R : Red P : Pink V : Violet PU : Purple

W6X54X052A

Main Index
Group TOC

**Power Window (rear) Circuit**

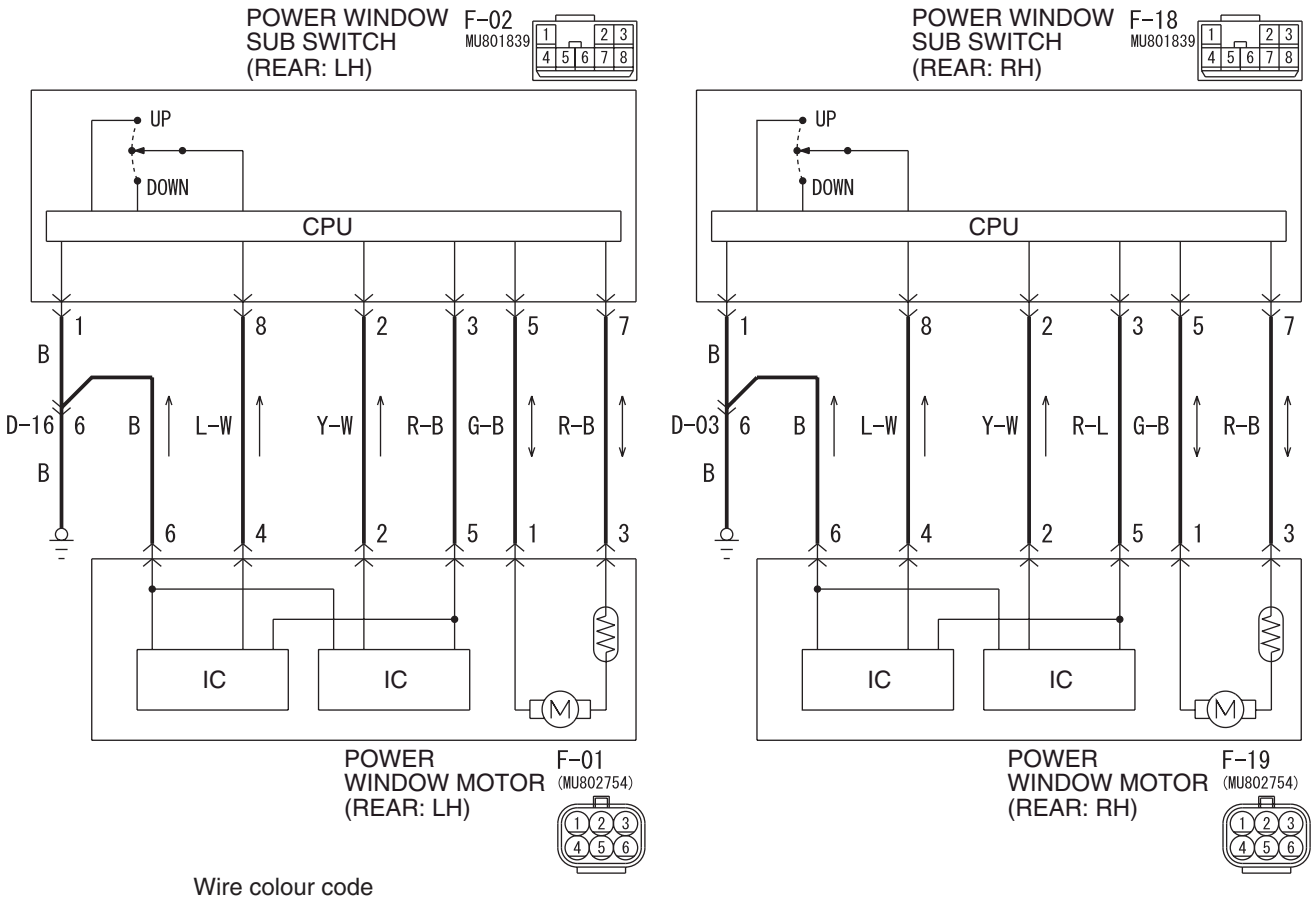


Wire colour code
B : Black LG : Light green G : Green L : Blue W : White Y : Yellow SB : Sky blue
BR : Brown O : Orange GR : Grey R : Red P : Pink V : Violet PU : Purple

W6X54X053A

## COMMENTS ON TROUBLE SYMPTOM

The revolution detection sensor, which is incorporated in the power window motor, may be defective.

## POSSIBLE CAUSE

- Malfunction of the power window motor

## DIAGNOSIS PROCEDURE

**Step 1. Check the power window operating current.**

Check that the power window operating current is normal (Refer to GROUP 42 – Door – On-vehicle Service P.42-31).

**Q: Is the check result normal?**

**YES :** Adjust the door window glass (Refer to GROUP 42 – Door – On-vehicle service P.42-29), and then go to Step 2.

**NO :** Replace the defective power window motor assembly which operating current are abnormal.

Main Index
Group TOC

**Step 2. Confirm the power window learning function.**

Check that the power window switch has learned the fully closed position of the windows (Refer to GROUP 42 – Door P.42-41).

**Q: Is the check result normal?**

**YES :** Go to Step 3.

**NO :** Make the power window switch learn the fully closed position of the windows (Refer to GROUP 42 – Door P.42-41).

**Step 3. Determine a trouble spot.**

**Q: Which door does the power window anti-trap function fail on?**

**Driver's door :** Go to Step 4.

**Front passenger's door :** Go to Step 7.

**Rear right door :** Go to Step 13.

**Rear left door :** Go to Step 19.

**Step 4. Connector check: F-05 power window main switch connector and F-16 power window motor (front: RH) connector.**

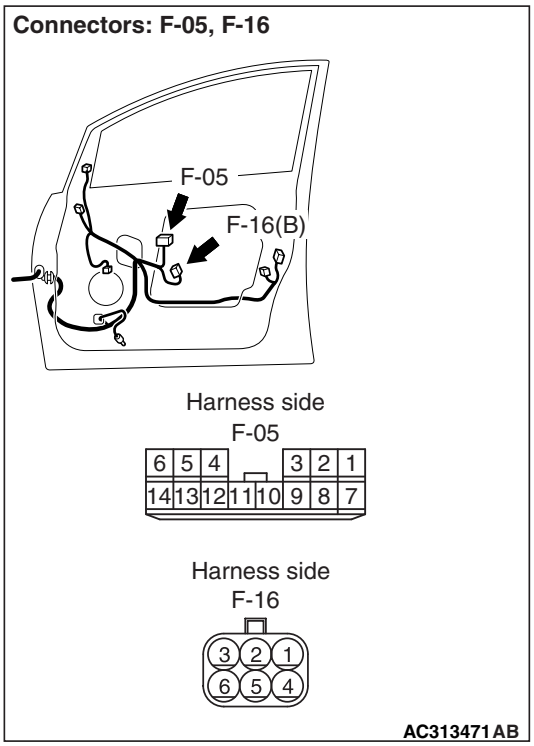


**Q: Is the check result normal?**

**YES :** Go to Step 5.

**NO :** Repair the defective connector.

**Step 5. Check the wiring harness from F-05 power window main switch connector terminal Nos. 8, 9, 10 and 12 to F-16 power window motor (front: RH) connector terminal Nos. 6, 2, 4 and 5.**

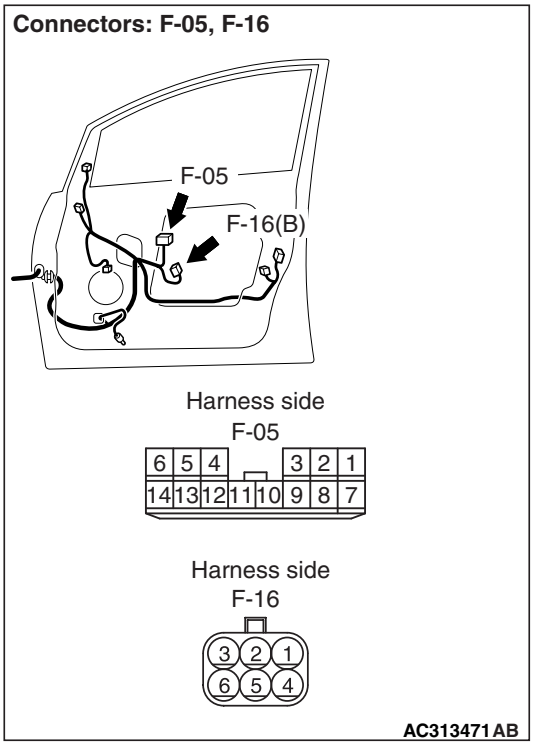


- Check the input and output lines to the revolution detection sensor for open or short circuit.

**Q: Is the check result normal?**

**YES :** Go to Step 6.

**NO :** Repair the wiring harness.

**Step 6. Retest the system.**

After the power window main switch is replaced, check that the driver's power window anti-trap function works.

(1) Replace the power window main switch.

(2) Check that the driver's power window anti-trap function works.

**Q: Is the check result normal?**

**YES :** The trouble can be an intermittent malfunction (Refer to GROUP 00 – How to Cope with Intermittent Malfunction P.00-5).

**NO :** Replace the power window motor (front: LH).

Main Index
Group TOC

**Step 7. Connector check: F-10 power window motor (front: LH) connector.**

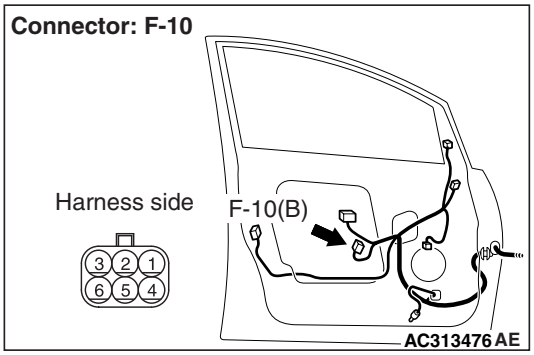


**Q: Is the check result normal?**
**YES :** Go to Step 8.
**NO :** Repair the defective connector.

**Step 8. Measure the resistance at F-10 power window motor (front: LH) connector.**

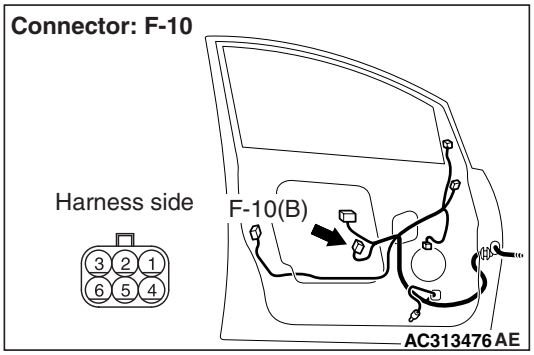


(1) Disconnect the connector, and measure at the wiring harness side.

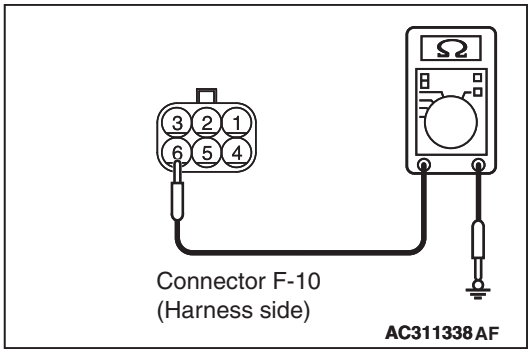


(2) Resistance between F-10 power window motor (front: LH) connector terminal No.6 and body earth.

**OK: 2Ω or less**

**Q: Is the check result normal?**
**YES :** Go to Step 10.
**NO :** Go to Step 9.

**Step 9. Check the wiring harness F-10 power window motor (front: LH) connector terminal No.6 to body earth.**

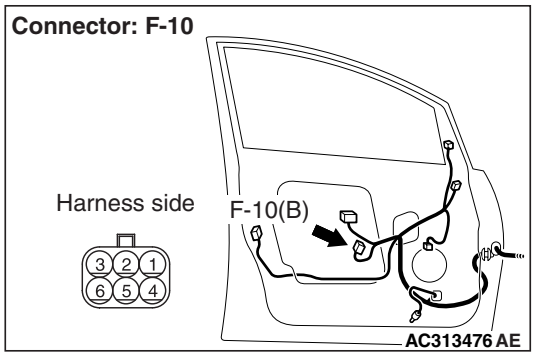


*NOTE:*

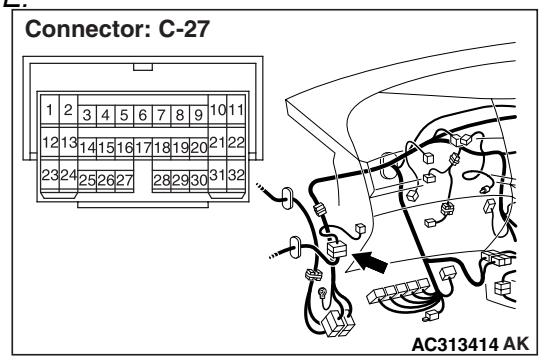


*Prior to the wiring harness inspection, check intermediate connector C-27 and repair if necessary.*

- Check the input and output lines to the revolution detection sensor for open or short circuit.

**Q: Is the check result normal?**
**YES :** Go to Step 10.
**NO :** Repair the wiring harness.

**Step 10. Connector check: F-26 power window sub switch (front: LH) connector F-10power window motor (front: RH) connector.**

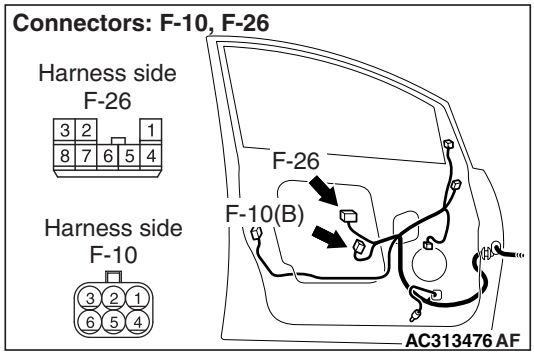


**Q: Is the check result normal?**
**YES :** Go to Step 11.
**NO :** Repair the defective connector.

Main Index
Group TOC

**Step 11. Check the wiring harness from F-26 power window sub switch (front: LH) connector terminal Nos. 2, 8 and 3 to F-10 power window motor (front: LH) connector terminal Nos. 2, 4 and 5.**

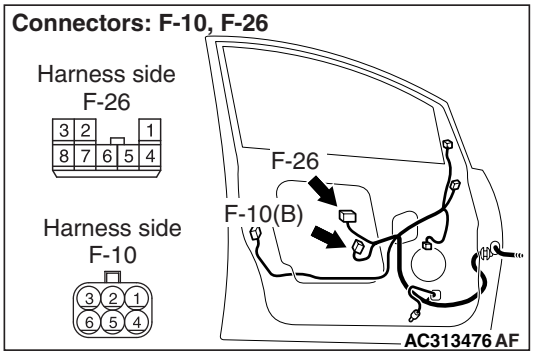


- Check the input and output lines to the revolution detection sensor for open or short circuit.

**Q: Is the check result normal?**
**YES :** Go to Step 12.
**NO :** Repair the wiring harness.

**Step 12. Retest the system.**

After the power window sub switch (front: LH) is replaced, check that the front passenger's anti-trap function can be operated by the power window sub switch.

(1) Replace the power window sub switch (front: LH).
(2) Check that the front passenger's power window anti-trap function works.

**Q: Is the check result normal?**
**YES :** The trouble can be an intermittent malfunction (Refer to GROUP 00 – How to Cope with Intermittent Malfunction P.00-5).
**NO :** Replace the power window motor (front: LH).

**Step 13. Connector check: F-19 power window motor (rear: RH) connector.**

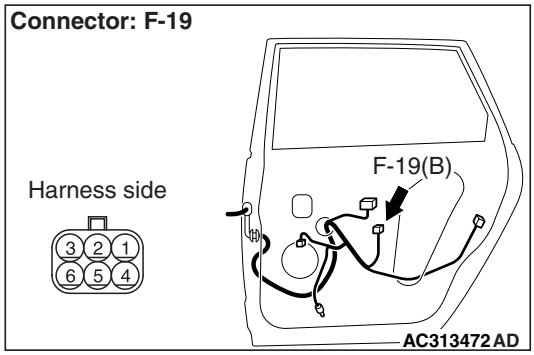


**Q: Is the check result normal?**
**YES :** Go to Step 14.
**NO :** Repair the defective connector.

**Step 14. Measure the resistance at F-19 power window motor (rear: RH) connector.**

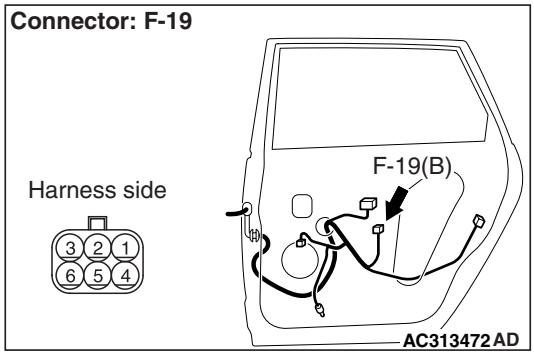


(1) Disconnect the connector, and measure at the wiring harness side.

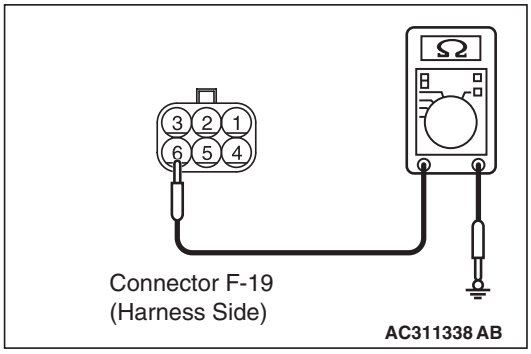


(2) Resistance between F-19 power window motor (rear: RH) connector terminal No.6 and body earth.

**OK: 2Ω or less**

**Q: Is the check result normal?**
**YES :** Go to Step 16.
**NO :** Go to Step 15.

Main Index
Group TOC

**Step 15. Check the wiring harness from F-19 power window motor (rear: RH) connector terminal No.6 to body earth.**

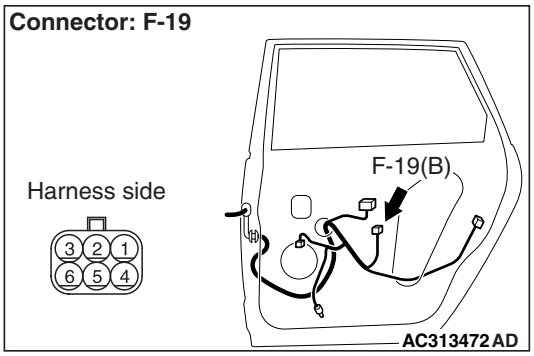


*NOTE:*

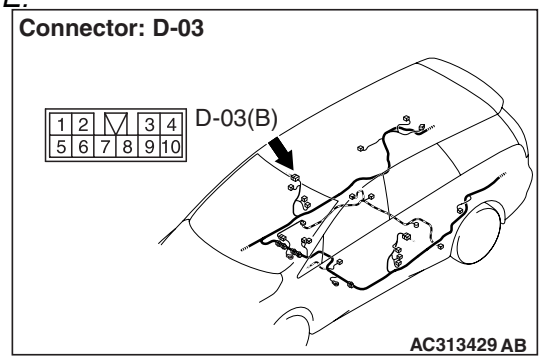


*Prior to the wiring harness inspection, check intermediate connector D-03, and repair if necessary.*

- Check the input and output lines to the revolution detection sensor for open or short circuit.

**Q: Is the check result normal?**
**YES :** Go to Step 16.
**NO :** Repair the wiring harness.

**Step 16. Connector check: F-18 power window sub switch (rear: RH) connector.**

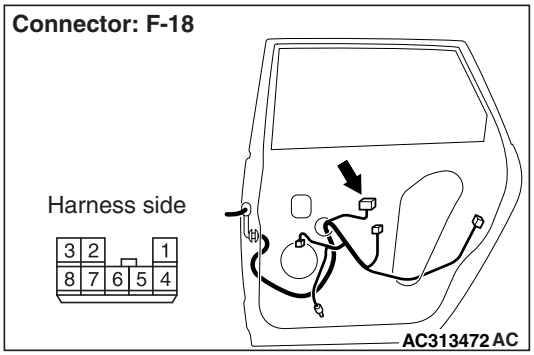


**Q: Is the check result normal?**
**YES :** Go to Step 17.
**NO :** Repair the defective connector.

**Step 17. Check the wiring harness from F-18 power window sub switch (rear: RH) connector terminal Nos. 2, 8 and 3 to F-19 power window motor (rear: RH) connector terminal Nos. 2, 4 and 5.**

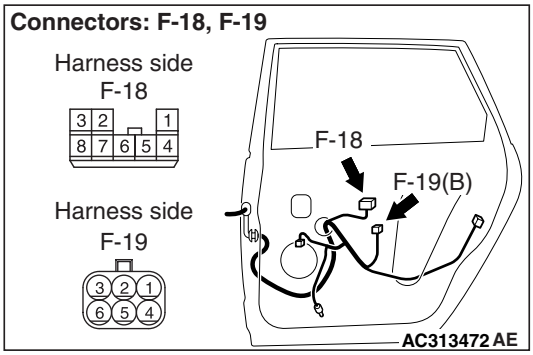


- Check the input and output lines to the revolution detection sensor for open or short circuit.

**Q: Is the check result normal?**
**YES :** Go to Step 18.
**NO :** Repair the wiring harness.

**Step 18. Retest the system.**

After the power window sub switch (rear: RH) is replaced, check that the rear right door anti-trap function can be operated by the power window sub switch.

(1) Replace the power window sub switch (rear: RH).
(2) Check that the rear right power window anti-trap function works.

**Q: Is the check result normal?**
**YES :** The trouble can be an intermittent malfunction (Refer to GROUP 00 – How to Cope with Intermittent Malfunction P.00-5).
**NO :** Replace the power window motor (rear: RH).

**Step 19. Connector check: F-01 power window motor (rear: LH) connector.**

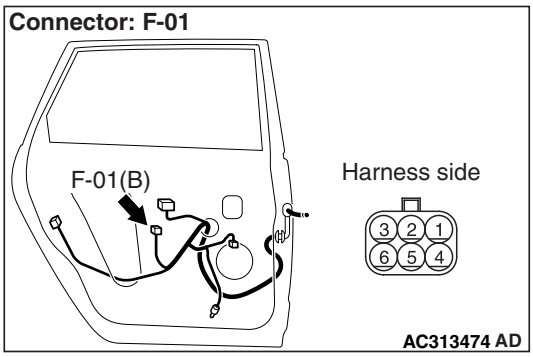


**Q: Is the check result normal?**
**YES :** Go to Step 20.
**NO :** Repair the defective connector.

**Step 20. Measure the resistance at F-01 power window motor (rear: LH) connector.**

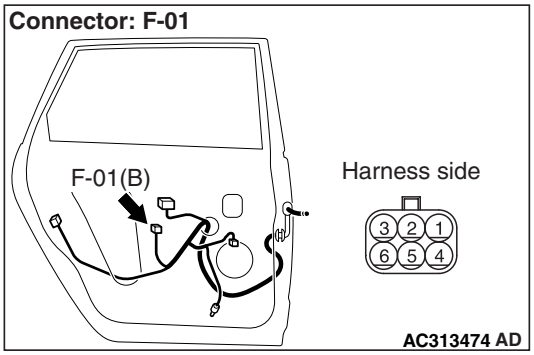


(1) Disconnect the connector, and measure at the wiring harness side.

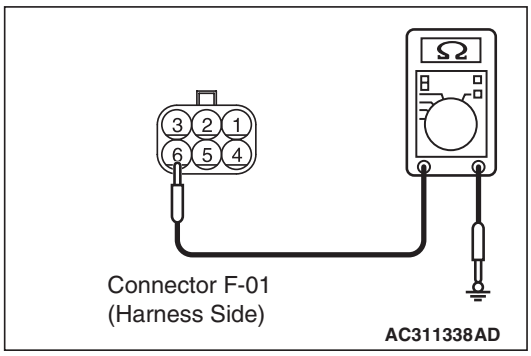


(2) Resistance between F-01 power window motor (rear: LH) connector terminal No.6 and body earth.

**OK: 2Ω or less**

**Q: Is the check result normal?**
**YES :** Go to Step 22.
**NO :** Go to Step 21.

**Step 21. Check the wiring harness from F-01 power window motor (rear: LH) connector terminal No.6 to body earth.**

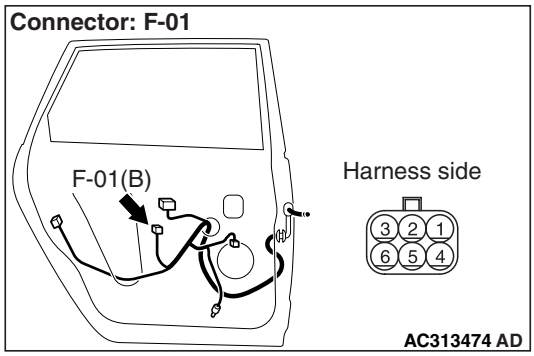


*NOTE:*

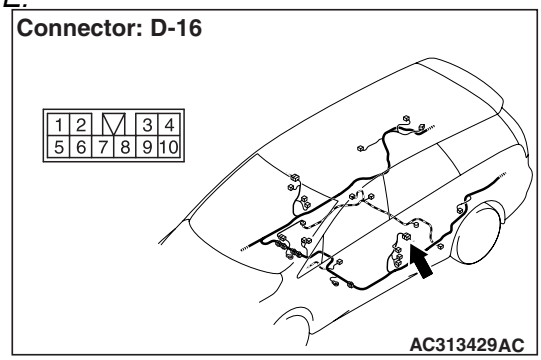


*Prior to the wiring harness inspection, check intermediate connector D-16, and repair if necessary.*

- Check the input and output lines to the revolution detection sensor for open or short circuit.

**Q: Is the check result normal?**
**YES :** Go to Step 22.
**NO :** Repair the wiring harness.

**Step 22. Connector check: F-02 power window sub switch (rear: LH) connector.**

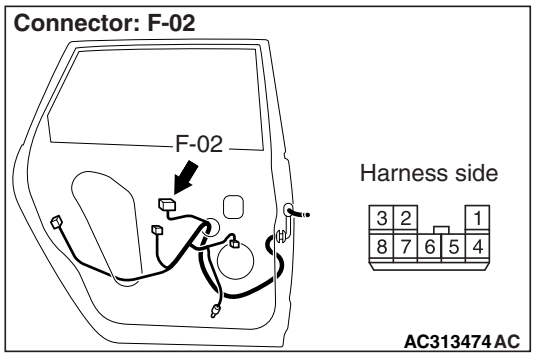


**Q: Is the check result normal?**
**YES :** Go to Step 23.
**NO :** Repair the defective connector.

Main Index
Group TOC

**Step 23. Check the wiring harness from F-02 power window sub switch (rear: LH) connector terminal Nos. 8, 2 and 3 to F-01 power window motor (rear: LH) connector terminal Nos. 4, 2 and 5.**

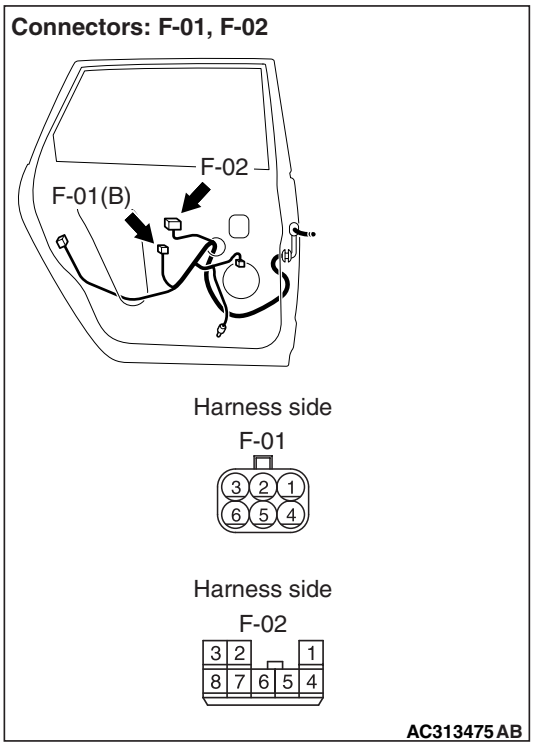


- Check the input and output lines to the revolution detection sensor for open or short circuit.

**Q: Is the check result normal?**
**YES :** Go to Step 24.
**NO :** Repair the wiring harness.

**Step 24. Retest the system.**
After the power window sub switch (rear: LH) is replaced, check that the rear left door anti-trap function can be operated by the power window sub switch.
(1) Replace the power window sub switch (rear: LH).
(2) Check that the rear left power window anti-trap function works.

**Q: Is the check result normal?**
**YES :** The trouble can be an intermittent malfunction (Refer to GROUP 00 – How to Cope with Intermittent Malfunction P.00-5).
**NO :** Replace the power window motor (rear: LH).

## INSPECTION PROCEDURE D-7: The power window timer function does not work normally.

**⚠ CAUTION**
**Whenever the ECU is replaced, ensure that the input and output signal circuits are normal.**

## COMMENTS ON TROUBLE SYMPTOM

If the power window timer function does not work normally, these input signal circuit(s), the power window main switch or the ETACS-ECU may be defective. Also, the power window timer function may have been disabled with the customisation function.

- Ignition switch (IG1)
- Driver's door switch

## POSSIBLE CAUSES

- Malfunction of the driver's door switch
- Malfunction of the power window main switch
- Malfunction of the ETACS-ECU
- Damaged harness wires and connectors

## DIAGNOSTIC PROCEDURE

**Step 1. Customise function by using the SWS monitor**

**Q: Is "P/W Key off timer" set to "30sec." by using the adjustment function?**
**YES :** Go to Step 2.
**NO :** Set "P/W Key off timer" to "30sec." by using the adjustment function (Refer to P.54E-353).

Main Index
Group TOC

**Step 2. ECU check on the SWS monitor**

Check that the power supply and earth lines to the ETACS-ECU and the power window main switch (power window module) and the SWS communication lines are normal.

- Turn the ignition switch from the ON to the OFF position.

**ECUS TO BE CHECKED**

- ETACS ECU
- P/W MODULE

**OK: "OK" is displayed for all the items**

*NOTE: "OK" is displayed for the power window switch (power window module) for approximately one minute, and then changed to "NG". However, only "OK" is displayed for the ETACS-ECU.*

**Q: Is the check result normal?**

**"OK" is displayed for all the items :** Go to Step 3.

**"NG" is displayed on the "ETACS ECU" menu. :** Refer to Inspection Procedure A-3 "Communication with ETACS-ECU is not possible P.54E-55."

**"NG" is displayed on the "P/W MODULE" menu. :** Refer to Inspection Procedure A-5 "Communication with the power window main switch (power window module) is not possible P.54E-64."

**Step 3. Function diagnosis by using the SWS monitor**

Check the SWS communication signal, which are related to the power window timer function.

**<Selected item> POWER WINDOW**

- Turn the ignition switch from the ON to the OFF position.

| Item No. | Item name | Normal conditions |
|---|---|---|
| Item 30 | IG SW IG1 | OFF |
| Item 33 | P/W SW ACCEPT | PERMIT |
| Item 71 | P/W ECU ACK | NORMAL ACK |

*NOTE: For item No.33 "P/W SW ACCEPT", "PERMIT" is displayed for approximately 30 seconds after the ignition switch is turned off, and then change to "PROHIBIT". In addition, on item No.71 "P/W MODULE", "NORMAL ACK" is changed to "INPUT CHECK" momentarily, when the power window main switch is operated for approximately 30 seconds after the ignition switch is turned off.*

**OK: Normal conditions are displayed for all the items.**

**Q: Is the check result normal?**

**Normal conditions are displayed for all the items. :** Go to Step 4.

**Normal condition is not displayed for item No.30 :** Refer to inspection procedure P-2 "The ignition switch (IG1) signal is not received P.54E-293."

**Normal condition is not displayed for item No.33 :** Replace the ETACS-ECU.

**Normal condition is not displayed for item No.71 :** Replace the power window main switch.

**Step 4. SWS monitor data list**

Check the SWS communication signal, which are related to the power window timer function.

**<Selected item> ETACS ECU**

- Driver's door: open

| Item No. | Item name | Normal condition |
|---|---|---|
| Item 32 | DR DOOR SW | ON |

**OK: Normal condition is displayed.**

**Q: Is the check result normal?**

**YES :** Go to Step 5.

**NO :** Refer to inspection procedure P-4 "The driver's door switch signal is not received P.54E-298."

**Step 5. Retest the system.**

Check that the power window timer function works normally.

**Q: Is the check result normal?**

**YES :** The trouble can be an intermittent malfunction (Refer to GROUP 00, How to Cope with Intermittent Malfunction P.00-5).

**NO :** Replace the power window main switch.

Main Index
Group TOC

# KEYLESS ENTRY SYSTEM

## INSPECTION PROCEDURE E-1: Keyless entry system does not work.

**⚠ CAUTION**
**Whenever the ECU is replaced, ensure that the input and output signal circuits are normal.**

**Keyless Entry System Function Circuit**

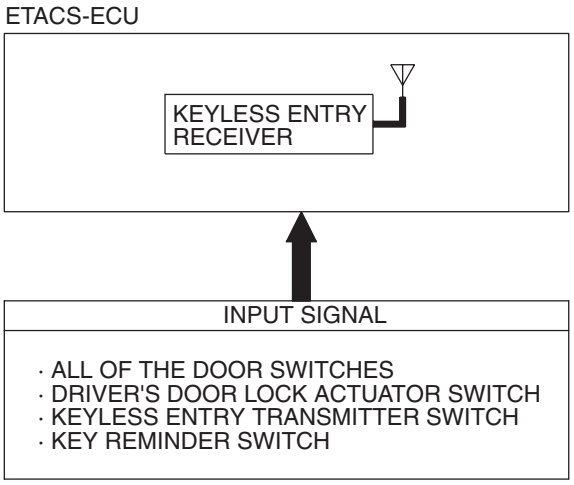


W3Z16E04AA

## COMMENTS ON TROUBLE SYMPTOM

If the keyless entry system does not work normally, the input signal circuits to the components below or the ETACS-ECU may be defective.

- Key reminder switch
- All of the door switches
- Keyless entry transmitter
- Driver's door lock actuator

## POSSIBLE CAUSES

- Malfunction of the key reminder switch
- Malfunction of the door switches
- Malfunction of the keyless entry transmitter
- Malfunction of the driver's door lock actuator
- Malfunction of the ETACS-ECU
- Damaged harness wires and connectors

## DIAGNOSIS PROCEDURE

**Step 1. Check the operation of the central door locking system.**

Check that the central door locking system works normally.

**Q: Is the check result normal?**

**YES :** Go to Step 2

**NO :** Refer to Inspection Procedure C-1 "Central door locking system does not work P.54E-84."

Main Index
Group TOC

**Step 2. ECU check by using the SWS monitor.**
Check that the power supply and earth lines to the ETACS-ECU and the SWS communication lines are normal.
- Ignition switch: OFF

**ECUS TO BE CHECKED**
- ETACS ECU

**OK: "OK" is displayed on the "ETACS ECU" menu.**

**Q: Is the check result normal?**
**YES :** Go to Step 3.
**NO :** Refer to Inspection Procedure A-3 "Communication with the ETACS-ECU is not possible P.54E-55."

**Step 3. Use the SWS monitor to examine the keyless entry system for signal reception.**
Check the condition of the keyless entry transmitter.

| Operation switch | Normal conditions (received signal) |
|---|---|
| LOCK | LOCK switch signal |
| UNLOCK | UNLOCK switch signal |

**OK: By operating the switch as shown in the table above, relevant normal conditions are displayed.**

**Q: Are normal condition displayed?**
**YES :** Go to Step 4.
**NO :** Refer to Inspection Procedure P-20 "Each switch signal of the keyless entry transmitter is not received P.54E-339."

**Step 4. SWS monitor data list.**
Check the SWS communication input signal, which are related to the keyless entry system.

**<Selected item> ETACS**
- Driver's door: Lock → Unlock

| Item No. | Item name | Normal condition |
|---|---|---|
| Item 32 | DR DOR SW | from OFF to ON |

**OK: Normal condition is displayed.**

**Q: Is normal condition displayed?**
**YES :** Go to Step 5.
**NO :** Refer to inspection procedure P-4 "The driver's door switch signal is not received P.54E-298."

**Step 5. ETACS switch data by using the SWS monitor.**
Check the ETACS-ECU signal related to the keyless entry system.
- Ignition switch: OFF (key inserted)
- Doors other than the driver's door (including the tailgate): Closed to open

| Item No. | Item name | Normal condition |
|---|---|---|
| Item 3 | Key reminder switch | OFF |
| Item 5 | Passenger's door switch | from OFF to ON |
| Item 7 | Trunk or lift gate switch | from OFF to ON |
| Item 41 | Rear door (right side) switch | from OFF to ON |
| Item 42 | Rear door (left side) switch | from OFF to ON |

**OK: Normal conditions are displayed for all the items.**

**Q: Is the check result normal?**
**Normal conditions displayed for all the items :** Go to Step 6.
**Normal condition is not displayed for item No.03. :** Refer to inspection procedure P-10 "The key reminder switch signal is not received P.54E-310."
**Normal condition is not displayed for item 05, 07, 41 or 42. :** Refer to inspection procedure P-12 "All the door switch signals are not received P.54E-316."

**Step 6. Retest the system.**
Check the keyless entry system works normally.

**Q: Is the check result normal?**
**YES :** The trouble can be an intermittent malfunction (Refer to GROUP 00 – How to Cope with Intermittent Malfunction P.00-5).
**NO :** Replace the ETACS-ECU.

Main Index
Group TOC

**INSPECTION PROCEDURE E-2: Keyless entry hazard lamp answerback function or the room lamp answerback function does not work normally.**

**⚠ CAUTION**
**Whenever the ECU is replaced, ensure that the input and output signal circuits are normal.**

## COMMENTS ON TROUBLE SYMPTOM

If the hazard warning lamp and the room lamp work normally, the ETACS-ECU may be defective. Alternatively, it is possible that the keyless entry hazard lamp answerback function was disabled by the customise function.

## POSSIBLE CAUSES

- Defective turn-signal lamp
- Malfunction of the room lamp
- Malfunction of the ETACS-ECU
- Damaged harness wires and connectors

## DIAGNOSIS PROCEDURE

**Step 1. Check the operation of the hazard warning lamp.**
Check that the hazard warning lamps illuminate normally.

**Q: Is the check result normal?**
**YES :** Go to Step 2.
**NO :** Refer to inspection procedure P-11 "The hazard warning lamp switch signal is not received P.54E-313".

**Step 2. Check the operation of the room lamps.**
Check that the room lamps illuminate normally.

**Q: Is the check result normal?**
**YES :** Go to Step 3.
**NO :** Refer to inspection procedure N-2 "The room lamp does not illuminate normally P.54E-252."

**Step 3. Check the operation of the keyless entry system.**
If the keyless entry system is operated, check that the doors can be locked and unlocked normally.

**Q: Is the check result normal?**
**YES :** Go to Step 4.
**NO :** Refer to inspection procedure E-1 "Keyless entry system does not work P.54E-132."

**Step 4. Customise function by using the SWS monitor**
Check that "Hazard answer-back operation" is set to other than "Without function" by using the SWS monitor customisation function.

- LOCK:1/UNLOCK:2
- LOCK:1/UNLOCK:0
- LOCK:0/UNLOCK:2
- LOCK:2/UNLOCK:1
- LOCK:2/UNLOCK:0
- LOCK:0/UNLOCK:1

**Q: Is the check result normal?**
**YES :** Go to Step 5.
**NO :** Set "Hazard answer-back operation" to other than "Without function" by using the SWS monitor customisation function (Refer to P.54E-353).

**Step 5. ECU check by using the SWS monitor**
Check that the power supply and earth lines to the ETACS-ECU and the SWS communication lines are normal.

- Ignition switch: OFF

**ECU TO BE CHECKED**

- ETACS ECU

**OK: "OK" is displayed on the "ETACS ECU" menu.**

**Q: Is the check result normal?**
**YES :** Go to Step 6.
**NO :** Refer to Inspection Procedure A-3 "Communication with the ETACS-ECU is not possible P.54E-55."

**Step 6. Retest the system.**
Check that the keyless entry hazard lamp answerback function or the room lamp answerback function work normally.

**Q: Is the check result normal?**
**YES :** The trouble can be an intermittent malfunction (Refer to GROUP 00 – How to Cope with Intermittent Malfunction P.00-5).
**NO :** Replace the ETACS-ECU.

Main Index
Group TOC

## INSPECTION PROCEDURE E-3: Encrypted code cannot be registered.

**⚠ CAUTION**
**Whenever the ECU is replaced, ensure that the input and output signal circuits are normal.**

**Encrypted Transmitter Code Register Mode**

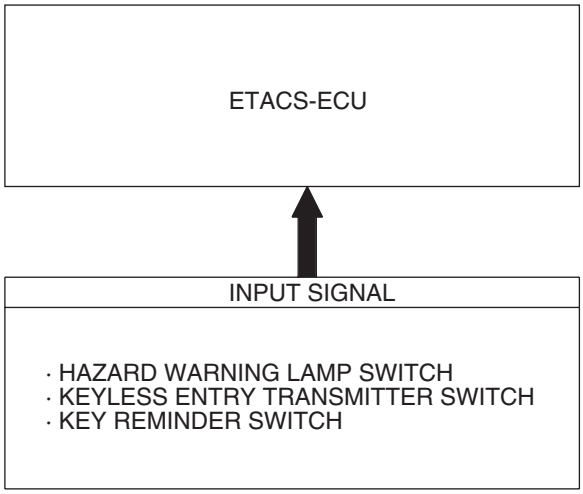


W4X54E164A

## COMMENTS ON TROUBLE SYMPTOM

If the encrypted code registration mode is not entered, the key reminder switch, the hazard warning lamp switch or the ETACS-ECU may be defective.
If the registration is not possible although the registration mode is entered, the keyless entry transmitter or the ETACS-ECU may be defective.

## POSSIBLE CAUSES

- Malfunction of the keyless entry transmitter
- Malfunction of the ETACS-ECU
- Damaged harness wires and connectors

## DIAGNOSIS PROCEDURE

**Step 1. Check the encrypted code registration mode.**
Check that the encrypted code registration mode is entered.

**Q: Is the check result normal?**
**YES :** Go to Step 3.
**NO :** Go to Step 2.

**Step 2. ETACS switch data by using the SWS monitor.**
Check the relevant ETACS-ECU signal before entering the encrypted code registration mode.

- Ignition switch: OFF (key inserted)
- Hazard lamp switch: ON

| Item No. | Item name | Normal condition |
|---|---|---|
| Item 3 | Key reminder switch | OFF |
| Item 4 | Hazard lamp switch | ON (only when switch is operated) |

**OK: Normal conditions are displayed for all the items.**

**Q: Is the check result normal?**
**Normal conditions displayed for all the items :** Go to Step 3.
**Normal condition is not displayed for item No.03. :** Refer to inspection procedure P-10 "The key reminder switch signal is not received P.54E-310."
**Normal condition is not displayed for item No.04. :** Refer to inspection procedure P-11 "The hazard warning lamp switch signal is not receivedP.54E-313."

Main Index
Group TOC

**Step 3. Use the SWS monitor to examine the keyless entry system for signal reception.**
Check the condition of the keyless entry transmitter.

| Operation switch | Normal conditions (received signal) |
|---|---|
| LOCK | LOCK switch signal |
| UNLOCK | UNLOCK switch signal |

**OK: By operating the switch as shown in the table above, relevant normal conditions are displayed.**

**Q: Is the check result normal?**
**YES :** Go to Step 4.
**NO :** Refer to Inspection Procedure P-19 "Each switch signal of the keyless entry transmitter is not received P.54E-339."

**Step 4. Retest the system.**
Check that the encrypted code can be registered.

**Q: Is the check result normal?**
**YES :** The trouble can be an intermittent malfunction (Refer to GROUP 00 – How to Cope with Intermittent Malfunction P.00-5).
**NO :** Replace the ETACS-ECU.

## INSPECTION PROCEDURE E-4: The Timer Lock Function does not Work after the Doors have been Unlocked by the Keyless Entry System.

**⚠ CAUTION**
**Whenever the ECU is replaced, ensure that the input and output signal circuits are normal.**

### COMMENT ON TROUBLE SYMPTOM

If the keyless entry timer lock does not work normally, the input signal circuit(s) to the keyless entry transmitter or the ETACS-ECU may be defective.

### POSSIBLE CAUSES

- Malfunction of the keyless entry transmitter
- Malfunction of the ETACS-ECU
- Damaged harness wires and connectors

### DIAGNOSIS PROCEDURE

**Step 1. Check the operation of the keyless entry system.**
Check that the keyless entry system works normally.

**Q: Is the check result normal?**
**YES :** Go to Step 2.
**NO :** Refer to inspection procedure E-1 "Keyless entry system does not work P.54E-132."

**Step 2. Customise function by using the SWS monitor.**
"Timer relock after unlocking" is set to one of the followings by using SWS monitor customisation function. Check that the timer lock is activated according to the setting.

- 30sec.
- 60sec.
- 120sec.
- 180sec.

**Q: Is the check result normal?**
**YES :** The trouble can be an intermittent malfunction (Refer to GROUP 00 – How to Cope with Intermittent Malfunction P.00-5).
**NO :** Replace the ETACS-ECU.

## INSPECTION PROCEDURE E-5: Multi-mode keyless entry system function does not work at all.

**⚠ CAUTION**
**Whenever the ECU is replaced, ensure that the input and output signal circuits are normal.**

## COMMENTS ON TROUBLE SYMPTOM

If the electric-folding door mirrors work normally, the ETACS-ECU may be defective.

## POSSIBLE CAUSES

- Malfunction of the keyless entry transmitter
- Malfunction of the ETACS-ECU

## DIAGNOSIS PROCEDURE

**Step 1. Check the operation of the electric folding outside rear-view mirrors.**
Check that the electric folding outside rear-view mirrors operate normally by using the remote controlled mirror switch (folding/unfolding switch).

**Q: Is the check result normal?**
**YES :** Go to Step 2
**NO :** Refer to Inspection Procedure I-1 "Electric retractable remote controlled door mirror does not work at all P.54E-177."

**Step 2. Check the keyless entry transmitter.**
Check that the keyless entry system works normally.

**Q: Is the check result normal?**
**YES :** Go to Step 3
**NO :** Refer to Inspection Procedure E-1 "Keyless entry system does not work. P.54E-132."

**Step 3. ECU check by using the SWS monitor.**
Check that the power supply and earth lines to the ETACS-ECU and the SWS communication lines are normal.

- Ignition switch: OFF
- Operate the multi-mode function with the keyless entry transmitter.

**ECU TO BE CHECKED**

- ETACS ECU

**OK: "OK" is displayed on the "ETACS ECU" menu.**

**Q: Is the check result normal?**
**YES :** Go to Step 4.
**NO :** Refer to Inspection Procedure A-3 "Communication with the ETACS-ECU is not possible P.54E-55."

**Step 4. Use the SWS monitor to examine the keyless entry system for signal reception.**
Check the condition of the keyless entry transmitter.

| Operation switch | Normal conditions (received signal) |
|---|---|
| LOCK (1 second or more) | LOCK switch signal |
| | LOCK switch long push signal |
| UNLOCK (1 second or more) | UNLOCK switch signal |
| | UNLOCK switch long push signal |

**OK: By operating the switch as shown in the table above, relevant normal conditions are displayed.**

**Q: Are the check result normal?**
**YES :** Go to Step 5.
**NO :** Refer to inspection procedure P-19 "Each switch signal of the keyless entry transmitter is not received P.54E-339."

**Step 5. SWS monitor data list.**
Check the SWS communication signal, which is related to the multi-mode keyless entry system.

**<Selected item> ETACS**

- Ignition switch: OFF
- Operate the multi-mode function with the keyless entry transmitter.

| Item No. | Item name | Normal conditions |
|---|---|---|
| Item 30 | IG SW IG1 | OFF |
| Item 34 | KEYLESS ENTRY | MULTI CLOSE, MULTI OPEN or MULTI STOP |

**OK: Normal conditions displayed for all the items**

**Q: Are the check result normal?**
**Normal conditions are displayed for all the items. :** Go to Step 6.
**Normal condition is not displayed for item No.30 :** Refer to inspection procedure P-2 "The ignition switch (IG1) signal is not received P.54E-293."
**Normal condition is not displayed for item No.34 :** Replace the ETACS-ECU.

Main Index
Group TOC

**Step 6. Retest the system.**

Check that the multi-mode keyless entry system works normally.

**Q: Is the check result normal?**

**YES :** The trouble can be an intermittent malfunction (Refer to GROUP 00 – How to Cope with Intermittent Malfunction P.00-5).

**NO :** Replace the power window main switch.

Main Index
Group TOC

# SUNROOF

## INSPECTION PROCEDURE F-1: The sunroof does not work at all.

**⚠ CAUTION**
**Whenever the ECU is replaced, ensure that the input and output signal circuits are normal.**

**Sunroof Motor Assembly Power Supply Circuit**

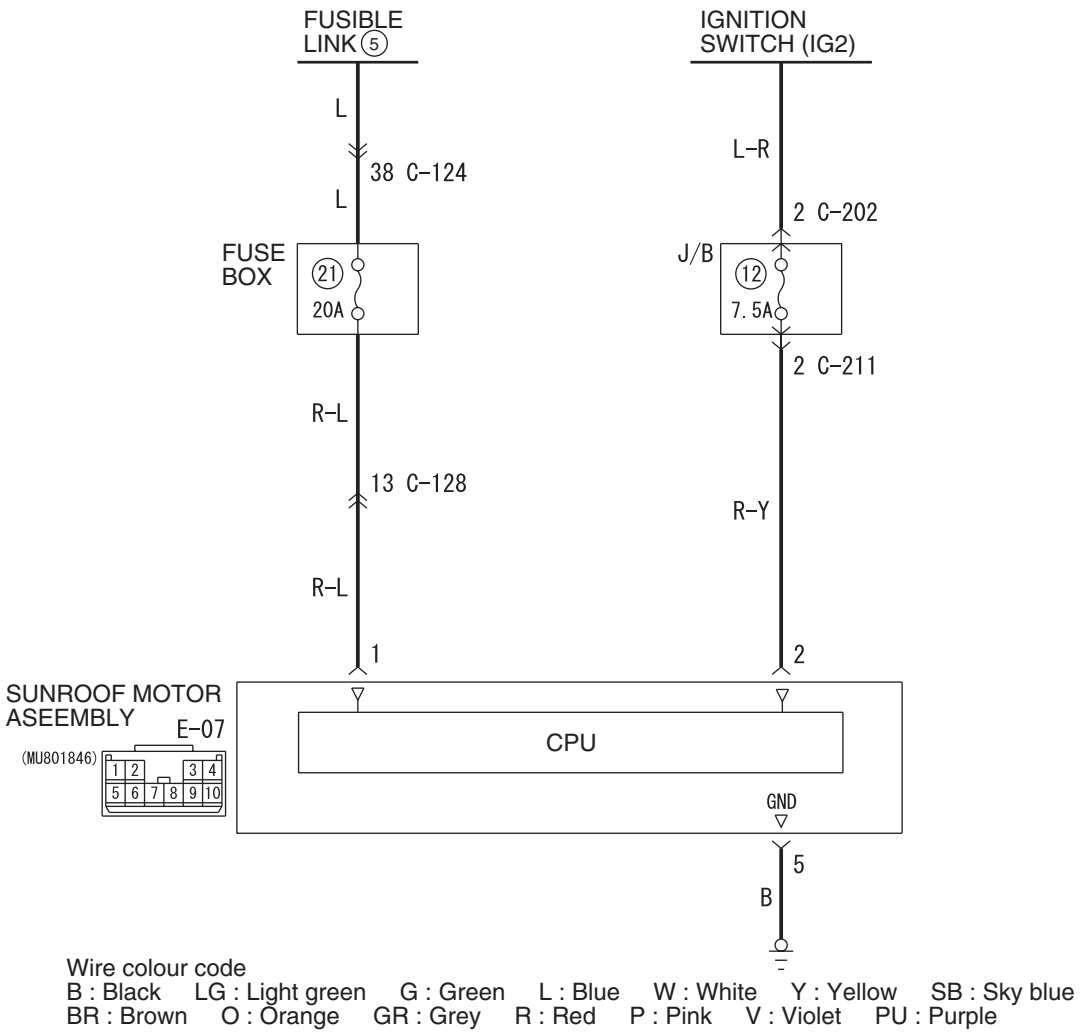


## COMMENTS ON TROUBLE SYMPTOM

If the sunroof does not work at all, these power supply circuit(s), these earth circuit(s), sunroof switch or the sunroof motor assembly (sunroof ECU) may be defective.

## PROBABLE CAUSES

- Malfunction of the sunroof switch
- Malfunction of the sunroof motor assembly (sunroof ECU)
- Malfunction of the power window main switch
- Damaged harness wires and connectors

Main Index
Group TOC

## DIAGNOSTIC PROCEDURE

**Step 1. Check the power window main switch.**
Check that the power window lock switch is turned off.

**Q: Is the check result normal?**
**YES :** Go to Step 2.
**NO :** Turn off the power window lock switch.

**Step 2. ECU check on the SWS monitor.**
Check that the power supply and earth lines to the sunroof motor assembly (sunroof-ECU) and the ETACS-ECU and the SWS communication lines are normal.
- Ignition switch: ON
- Operate the sunroof switch.

**ECUS TO BE CHECKED**
- ETACS ECU
- SUNROOF ECU

**OK: "OK" is displayed for all the items.**

**Q: Is the check result normal?**
**"OK" is displayed for all the items :** Go to Step 3.
**"NG" is displayed on the "ETACS ECU" menu. :** Refer to Inspection Procedure A-3 "Communication with the ETACS-ECU is not possible P.54E-55."
**"NG" is displayed on the "SUNROOF ECU" menu. :** Refer to Inspection Procedure A-6 "Communication with the sunroof motor assembly (sunroof-ECU) is not possible P.54E-71."

**Step 3. Check the power window main switch.**
Check that all of the front passenger's and rear door power windows can operate by means of the power window main switch.

**Q: Is the check result normal?**
**YES :** Go to Step 4.
**NO :** Refer to Inspection Procedure D-1 "Power windows do not work at all P.54E-99."

**Step 4. Function diagnosis by using the SWS monitor**
Check the SWS communication signal, which are related to the sunroof.

**<Selected item> SUNROOF OPE**
- Ignition switch: ON

| Item No. | Item name | Normal conditions |
|---|---|---|
| Item 30 | IG SW(IG1) | ON |
| Item 72 | S/R ECU ACK | INPUT CHECK (only momentarily when switch is operated) |

**OK: Normal conditions are displayed for all the items.**

**Q: Is the check result normal?**
**Normal conditions are displayed for all the items. :** Go to Step 5.
**Normal condition is not displayed for item No.30 :** Refer to inspection procedure P-2 "The ignition switch (IG1) signal is not received P.54E-293."
**Normal condition is not displayed for item No.72 :** Refer to inspection procedure P-9 "When the sunroof switch is operated, the switch signals are not received P.54E-307."

**Step 5. Retest the system.**
The sunroof assembly should now work normally.

**Q: Is the check result normal?**
**YES :** The trouble can be an intermittent malfunction (Refer to GROUP 00 – How to Cope with Intermittent Malfunction P.00-5).
**NO :** Replace the sunroof motor assembly.

Main Index
Group TOC

## INSPECTION PROCEDURE F-2: Any of the sunroof switch positions is defective.

**⚠ CAUTION**
**Whenever the ECU is replaced, ensure that the input and output signal circuits are normal.**

**Sunroof Switch Circuit**

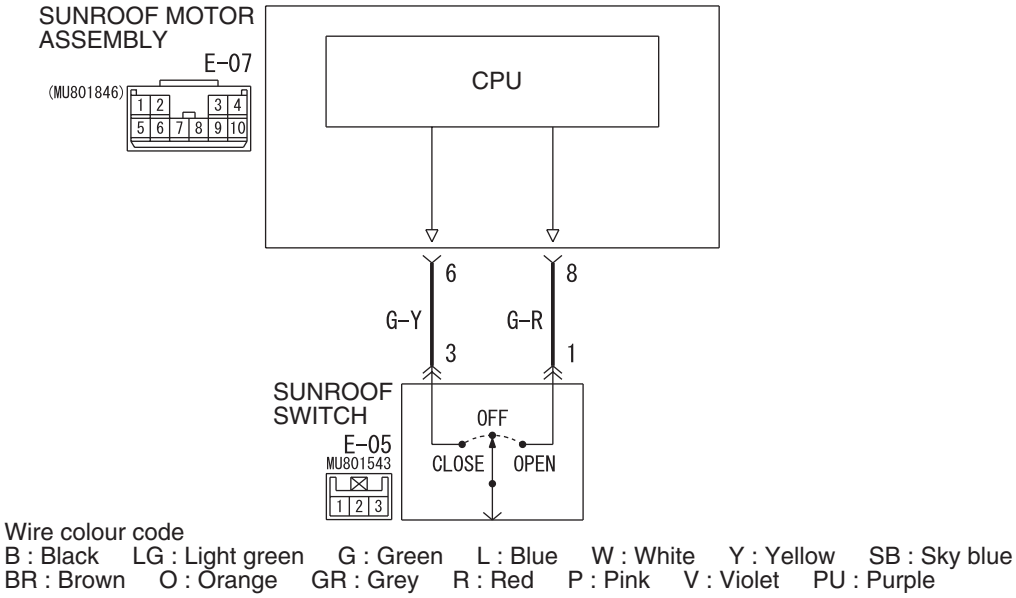


## COMMENTS ON TROUBLE SYMPTOM

If any of the sunroof switch positions is defective, the communication line between the sunroof switch and the sunroof motor assembly (sunroof-ECU) may be defective.

## POSSIBLE CAUSES

- Malfunction of the sunroof switch
- Malfunction of the sunroof motor assembly (sunroof-ECU)
- Damaged harness wires and connectors

## DIAGNOSTIC PROCEDURE

**Step 1. SWS monitor data list.**
Check the SWS communication signal, which are related to the sunroof.

**<Selected item> Front ECU·P/W·S/R**

- Ignition switch: ON
- Operate the sunroof switch.

| Item No. | Item name | Normal conditions |
|---|---|---|
| Item 72 | S/R ECU ACK | INPUT CHECK (only momentarily when switch is operated) |

**OK: Normal condition is displayed.**

**Q: Is the check result normal?**
**YES :** Replace the sunroof motor assembly.
**NO :** Refer to inspection procedure P-9 "When the sunroof switch is operated, the switch signals are not received P.54E-307."

Main Index
Group TOC

## INSPECTION PROCEDURE F-3: Sunroof timer function does not work normally.

**⚠ CAUTION**
**Whenever the ECU is replaced, ensure that the input and output signal circuits are normal.**

**Sunroof Timer Function**

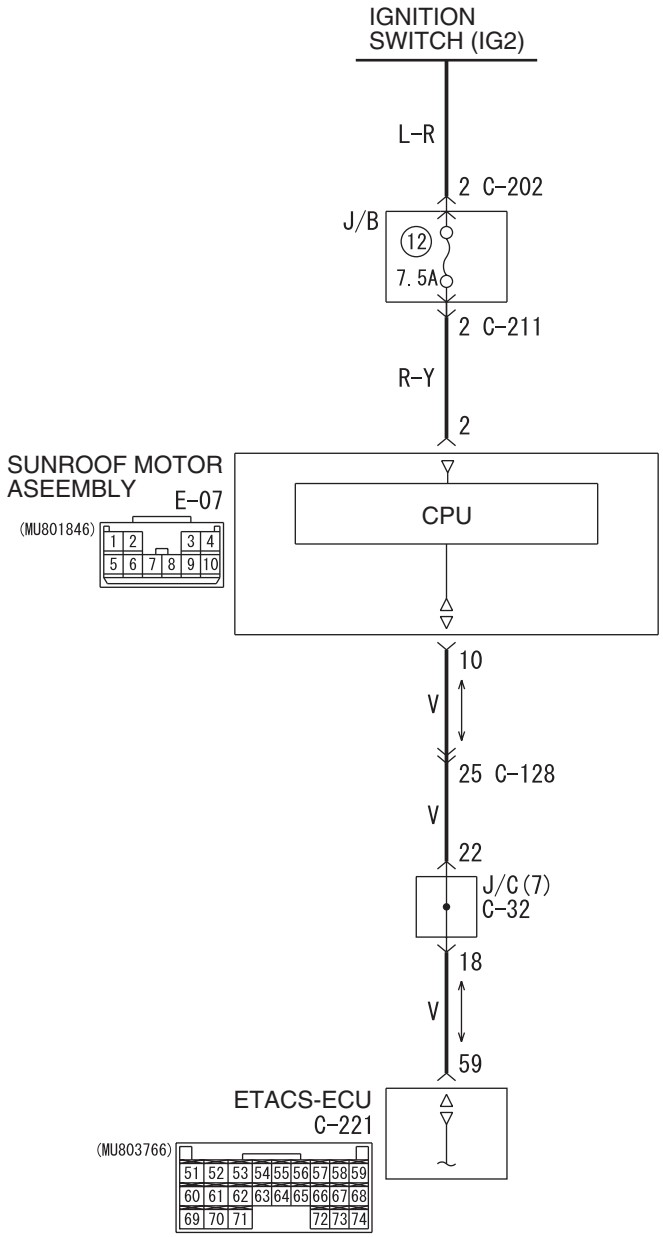


Wire colour code
B : Black LG : Light green G : Green L : Blue W : White Y : Yellow SB : Sky blue
BR : Brown O : Orange GR : Grey R : Red P : Pink V : Violet PU : Purple

W6X54X059A

## COMMENTS ON TROUBLE SYMPTOM

If the sunroof timer function does not work, the input circuit from the ignition switch (IG1) or the driver's door switch, the communication lines between the ETACS-ECU and the sunroof motor assembly (sunroof-ECU), the sunroof motor assembly (sunroof-ECU) or the ETACS-ECU may be defective.

Main Index
Group TOC

## POSSIBLE CAUSES

- Malfunction of the driver's door switch
- Malfunction of ETACS-ECU
- Malfunction of the sunroof motor assembly (sunroof-ECU)
- Damaged harness wires and connectors

## DIAGNOSTIC PROCEDURE

**Step 1. Customize function by using the SWS monitor**

Use the SWS monitor customise function to confirm that "P/W key off timer" is set to "Without function".

- 30sec.
- 3min.
- 10min.

**Q: Is the check result normal?**

**YES :** Go to Step 2.

**NO :** Use the SWS monitor customise function to set the "P/W key off timer" to "Without function" (Refer to P.54E-353).

**Step 2. ECU check on the SWS monitor.**

Check that the power supply and earth lines to the sunroof motor assembly (sunroof-ECU) and the ETACS-ECU and the SWS communication lines are normal.

- Ignition switch: OFF
- Operate the sunroof switch.

*NOTE: Operate within the period set by using the customisation function after the ignition switch is turned off.*

**ECUS TO BE CHECKED**

- ETACS ECU
- SUNROOF ECU

**OK: "OK" is displayed for all the items**

**Q: Is the check result normal?**

**"OK" is displayed for all the items :** Go to Step 3.

**"NG" is displayed on the "ETACS ECU" menu. :** Refer to Inspection Procedure A-3 "Communication with the ETACS-ECU is not possible P.54E-55."

**"NG" is displayed on the "SUNROOF ECU" menu. :** Refer to Inspection Procedure A-6 "Communication with the sunroof motor assembly (sunroof-ECU) is not possible P.54E-71."

**Step 3. Function diagnosis by using the SWS monitor.**

Check the SWS communication signal, which are related to the sunroof.

**<Selected item> SUNROOF OPE**

- Ignition switch: ON

| Item No. | Item name | Normal conditions |
|---|---|---|
| Item 72 | S/R ECU ACK | INPUT CHECK (only momentarily when switch is operated) |

**OK: Normal condition is displayed.**

**Q: Is the check result normal?**

**YES :** Go to Step 4.

**NO :** Replace the sunroof motor assembly.

**Step 4. SWS monitor data list.**

Check the SWS communication signal, which are related to the sunroof timer function.

**<Selected item> ETACS-ECU**

- Driver's door switch: CLOSE to OPEN

| Item No. | Item name | Normal conditions |
|---|---|---|
| Item 32 | DR DOOR SW | From OFF to ON |

**OK: Normal condition is displayed.**

**Q: Is the check result normal?**

**YES :** Go to Step 5.

**NO :** Refer to inspection procedure P-4 "The driver's door switch signal is not received P.54E-298."

**Step 5. Retest the system.**

Check that the sunroof timer function work normally.

**Q: Is the check result normal?**

**YES :** The trouble can be an intermittent malfunction (Refer to GROUP 00 – How to Cope with Intermittent Malfunction P.00-5).

**NO :** Replace the sunroof motor assembly.

Main Index
Group TOC

**INSPECTION PROCEDURE F-4: The sunroof inhibition function does not work normally (The sunroof operation lock warning buzzer does not sound).**

**⚠ CAUTION**
**Whenever the ECU is replaced, ensure that the input and output signal circuits are normal.**

**Sunroof Lock Function**

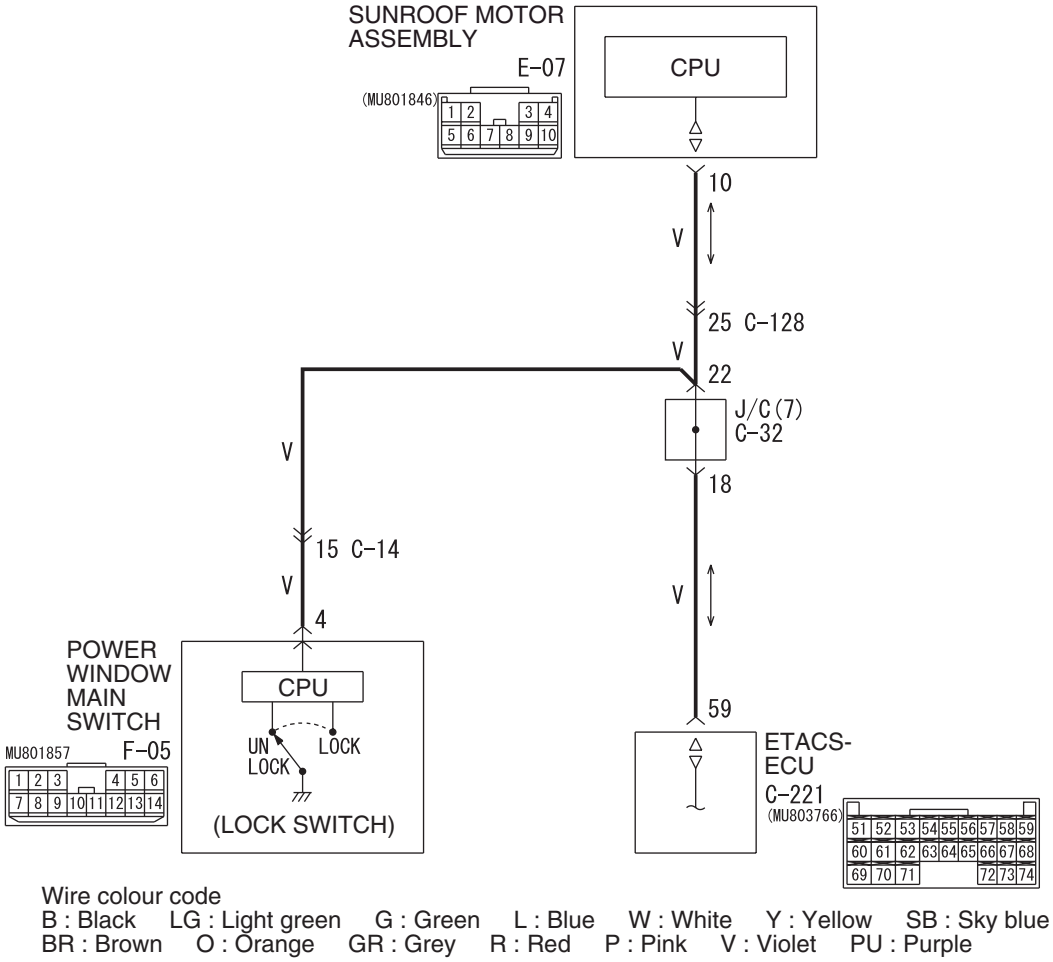


W6X54X060A

## COMMENTS ON TROUBLE SYMPTOM

If the sunroof inhibition function does not work normally, the sunroof motor assembly, the power window main switch or the ETACS-ECU may be defective.

## POSSIBLE CAUSES

- Malfunction of the power window main switch
- Malfunction of the sunroof motor assembly (sunroof ECU)
- Malfunction of the ETACS-ECU
- Damaged harness wires and connectors

**Step 1. Which does not operate normally, the sunroof inhibition or the sunroof operation lock buzzer?**

**Q: Which does not operate normally, the sunroof inhibition or the sunroof operation lock buzzer?**
**The sunroof inhibition does not work normally. :** Go to Step 2.
**The sunroof operation lock buzzer does not work normally. :** Go to Step 4.
**Neither operates normally. :** Go to Step 6.

Main Index
Group TOC

**Step 2. Check the operation condition of the sunroof.**
Check that the sunroof works normally.

**Q: Is the check result normal?**
**YES :** Go to Step 3.
**NO :** Refer to Inspection Procedure F-1 "The sunroof does not work at all P.54E-139."

**Step 3. ECU check by using the SWS monitor.**
Check that the power supply and earth lines to the ETACS-ECU and the sunroof motor assembly (incorporating sunroof-ECU) and the SWS communication lines are normal.
- Ignition switch: ON
- Operate the sunroof switch.

**ECUS TO BE CHECKED**
- Sunroof ECU

**"OK" is displayed on the "SUNROOF ECU" menu.**

**Q: Is the check result normal?**
**YES :** The trouble can be an intermittent malfunction (Refer to GROUP 00 – How to Cope with Intermittent Malfunction P.00-5).
**NO :** Refer to Inspection Procedure A-6 "Communication with the sunroof motor assembly (sunroof-ECU) is not possible P.54E-71."

**Step 4. ECU check on the SWS monitor**
Check that the power supply and earth lines to the ETACS-ECU the SWS communication lines is normal.
- Ignition switch: ON

**ECUS TO BE CHECKED**
- ETACS ECU

**OK: "OK" is displayed on the "ETACS ECU" menu.**

**Q: Is the check result normal?**
**YES :** Go to Step 5.
**NO :** Refer to Inspection Procedure A-3 "Communication with the ETACS-ECU is not possible P.54E-55."

**Step 5. SWS monitor data list**
Check the SWS communication signal, which are related to the sunroof operation lock buzzer.

**<Selected item> S/R- REAR S/R LOCK**
- Ignition switch: ON
- Power window lock switch:ON
- Operate the sunroof switch

| Item No. | Item name | Normal conditions |
|---|---|---|
| Item 30 | IG SW(IG1) | ON |
| Item 43 | BUZZER | ON |
| Item 72 | S/R ECU ACK | BUZZER ACK |

**OK: Normal conditions is displayed.**

**Q: Is the check result normal?**
**NO :** The trouble can be an intermittent malfunction (Refer to GROUP 00 – How to Cope with Intermittent Malfunction P.00-5).
**NO :** Replace the ETACS.

**Step 6. ECU check by using the SWS monitor**
Check that the power supply and earth lines to the ETACS-ECU, the sunroof motor assembly (incorporating sunroof-ECU) and the power window main switch (power window module), and the SWS communication lines are normal.
- Ignition switch: ON
- Operate the sunroof switch.

**ECUS TO BE CHECKED**
- ETACS ECU
- P/W MODULE
- Sunroof ECU

**OK: Normal conditions are displayed for all the items.**

**Q: Are the check result normal?**
**"OK" is displayed for all the items :** Go to Step 7.
**"NG" is displayed on the "ETACS ECU" menu. :** Refer to Inspection Procedure A-3 "Communication with the ETACS-ECU is not possible P.54E-55."
**"NG" is displayed on the "P/W MODULE" menu. :** Refer to Inspection Procedure A-5 "Communication with the power window main switch (power window module) is not possible P.54E-64."
**"NG" is displayed on the "SUNROOF ECU" menu. :** Refer to Inspection Procedure A-6 "Communication with the sunroof motor assembly (sunroof-ECU) is not possible P.54E-71."

Main Index
Group TOC

**Step 7. SWS monitor data list.**
Check the SWS communication signal, which are related to the sunroof inhibition function.

**<Selected item> S/R- REAR S/R LOCK**
- Ignition switch: ON
- Power window lock switch: ON
- Operate the sunroof switch

| Item No. | Item name | Normal conditions |
|---|---|---|
| Item 30 | IG SW(IG1) | ON |
| Item 43 | BUZZER | ON |
| Item 71 | P/W ECU ACK | P/W LOCK ACK |
| Item 72 | S/R ECU ACK | BUZZER ACK |

**OK: Normal conditions are displayed for all the items.**

**Q: Are the check result normal?**
**Normal conditions are displayed for all the items :** The trouble can be an intermittent malfunction (Refer to GROUP 00 – How to Cope with Intermittent Malfunction P.00-5).
**Normal condition is not displayed for item No.30 :** Refer to inspection procedure P-2 "The ignition switch (IG1) signal is not received P.54E-293."
**Normal condition is not displayed for item No.43 :** Replace the ETACS.
**Normal condition is not displayed for item No.71 :** Replace the power window main switch.
**Normal condition is not displayed for item No.72 :** Replace the sunroof motor assembly.

## INSPECTION PROCEDURE F-5: Sunroof anti-trap function does not work normally.

**⚠ CAUTION**
**Whenever the ECU is replaced, ensure that the input and output signal circuits are normal.**

## COMMENTS ON TROUBLE SYMPTOM
If the sunroof anti-trap function does not work, the sunroof motor assembly (sunroof-ECU) may be defective.

## POSSIBLE CAUSES
- Malfunction of the sunroof motor assembly (sunroof-ECU)

## DIAGNOSTIC PROCEDURE

**Retest the system.**
Check that the sunroof anti-trap function work normally.

**Q: Is the check result normal?**
**YES :** The trouble can be an intermittent malfunction (Refer to GROUP 00 – How to Cope with Intermittent Malfunction P.00-5).
**NO :** Replace the sunroof motor assembly.

Main Index
Group TOC

# WINDSHIELD WIPER AND WASHER

## INSPECTION PROCEDURE G-1: The windshield wipers do not work at all.

**⚠ CAUTION**
**Whenever the ECU is replaced, ensure that the input and output signal circuits are normal.**

**Windshield Wiper Power Supply Circuit**

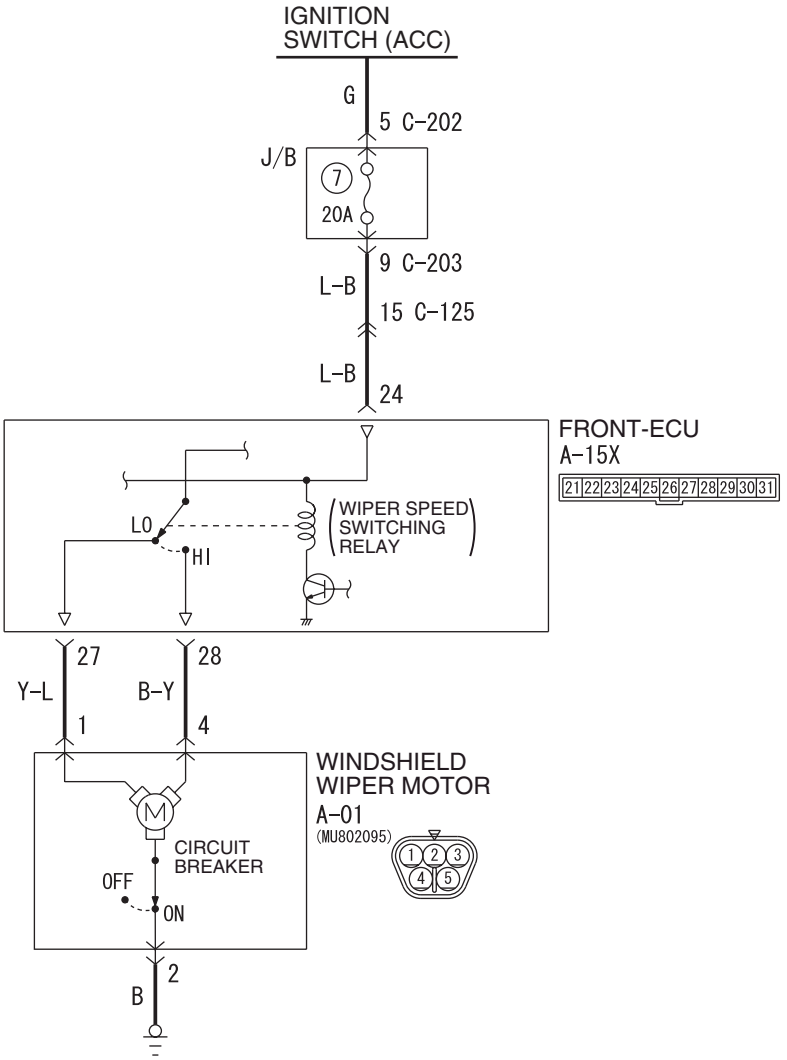


Wire colour code
B : Black LG : Light green G : Green L : Blue W : White Y : Yellow SB : Sky blue
BR : Brown O : Orange GR : Grey R : Red P : Pink V : Violet PU : Purple

W6X54X054A

## COMMENTS ON TROUBLE SYMPTOM

The windshield wiper motor, the column switch or the front-ECU may be defective. If a problem is found in the ECU check by using the SWS monitor, also check the wiper backup circuit (between C-301 column switch connector terminal No.8 and A-15X front-ECU connector terminal No.26) and repair if necessary.

Main Index
Group TOC

## POSSIBLE CAUSES

- Malfunction of the windshield wiper motor
- Malfunction of the column switch
- Malfunction of the front-ECU
- Damaged harness wires and connectors

## DIAGNOSIS PROCEDURE

**Step 1. ECU check by using the SWS monitor.**
Check that the power supply and earth lines to the column switch (column-ECU) and the front-ECU and the SWS communication lines are normal.

- Turn the ignition switch to the ON position.

**ECUS TO BE CHECKED**

- COLUMN ECU
- FRONT ECU

**OK: "OK" is displayed for all the items**

**Q: Is the check result normal?**
**"OK" is displayed for all the items :** Go to Step 2.
**"NG" is displayed on the "COLUMN ECU" menu. :** Refer to Inspection Procedure A-2 "Communication with the column switch (column-ECU) is not possible P.54E-51."
**"NG" is displayed on the "FRONT ECU" menu. :** Refer to Inspection Procedure A-4 "Communication with the front-ECU is not possible P.54E-60."

**Step 2. Function diagnosis by using the SWS monitor.**
Check the SWS communication signal, which are related to the windshield wiper function.

**<Selected item> F.WIPER INT**

- Turn the ignition switch to the ACC position.
- Windshield wiper switch: INT

| Item No. | Item name | Normal condition |
|---|---|---|
| Item 05 | INT WIPER SW | ON |
| Item 31 | IG SW (ACC) | ON |
| Item 70 | FRONT ECU ACK | NORMAL ACK or HI-BEAM ACK |

**OK: Normal conditions are displayed for all the items.**

**Q: Is the check result normal?**
**Normal conditions displayed for all the items :** Go to Step 3.
**Normal condition is not displayed for item No.05 :** Replace the column switch.
**Normal condition is not displayed for item No.31 :** Refer to inspection procedure P-1 "The ignition switch (ACC) signal is not received P.54E-291."
**Normal condition is not displayed for item No.70 :** Replace the front-ECU.

**Step 3. Connector check: A-01 windshield wiper motor connector.**

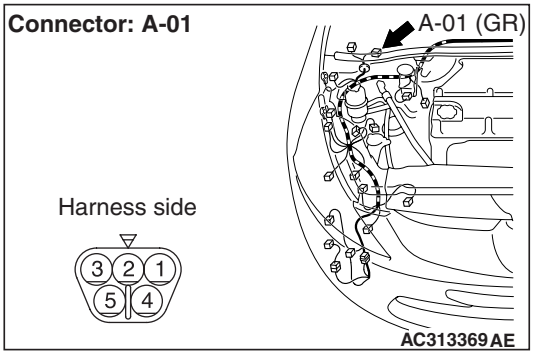


**Q: Is the check result normal?**
**YES :** Go to Step 4.
**NO :** Repair the connector.

**Step 4. Check the windshield wiper motor assembly.**
Refer to GROUP 51 – Windshield wiper P.51-20.

**Q: Is the check result normal?**
**YES :** Go to Step 5.
**NO :** Replace the windshield wiper motor assembly.

**Step 5. Resistance measurement at the A-01 windshield wiper motor connector.**

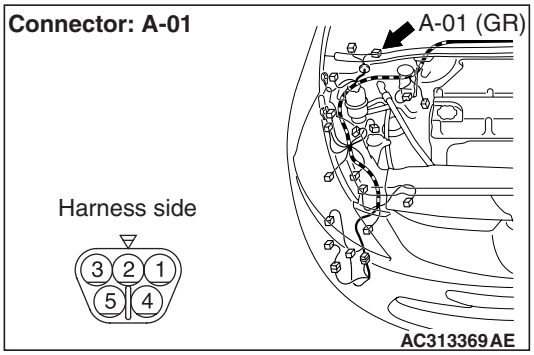


(1) Disconnect the connector, and measure at the wiring harness side.

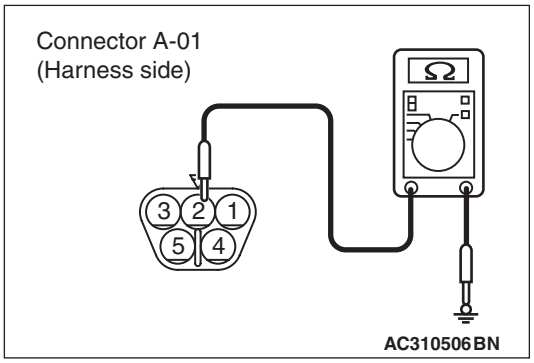


(2) Continuity between A-01 windshield wiper motor connector terminal No.2, and body earth

**OK: 2Ω or less**

**Q: Is the check result normal?**
**YES :** Go to Step 7.
**NO :** Go to Step 6.

**Step 6. Check the wiring harness between A-01 windshield wiper motor connector terminal No.2 to body earth.**

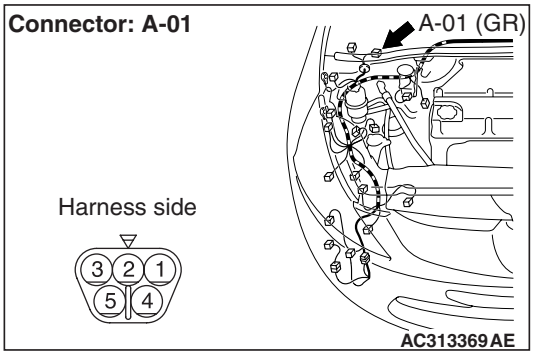


- Check the earth wires for open circuit.

**Q: Is the check result normal?**
**YES :** The trouble can be an intermittent malfunction (Refer to GROUP 00 – How to Cope with Intermittent Malfunction P.00-5).
**NO :** Repair the wiring harness.

**Step 7. Connector check: A-15X front-ECU connector.**

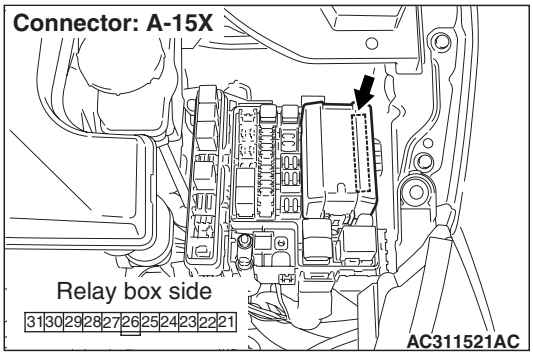


**Q: Is the check result normal?**
**YES :** Go to Step 8.
**NO :** Repair the connector.

**Step 8. Voltage measurement at the A-15X front-ECU connector.**

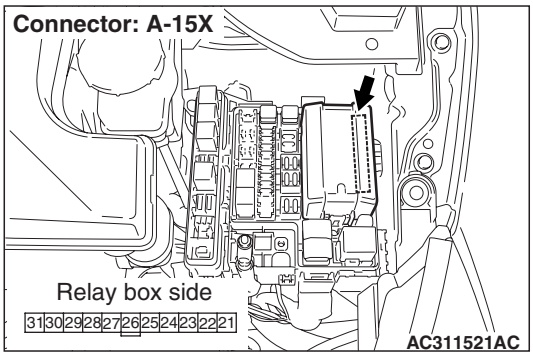


(1) Remove the front-ECU, and measure at the relay box side.
(2) Ignition switch: ACC

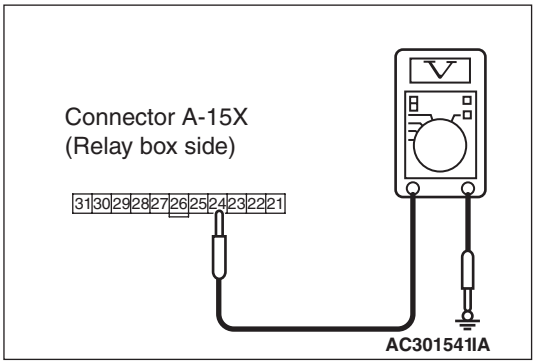


(3) Check the voltage between the A-15X front-ECU connector terminal No.24 and body earth.

**OK: System voltage**

**Q: Is the check result normal?**
**YES :** Go to Step 10.
**NO :** Go to Step 9.

Main Index
Group TOC

**Step 9. Check the wiring harness between A-15X front-ECU connector terminal No.24 to the ignition switch (ACC).**

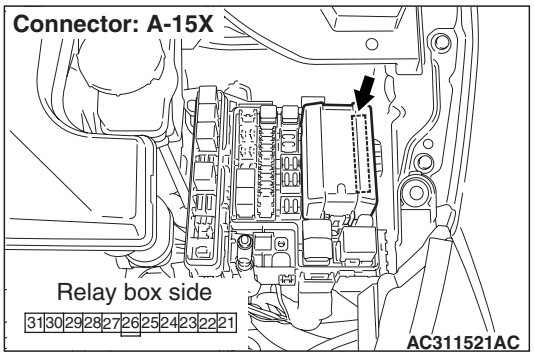


*NOTE:*

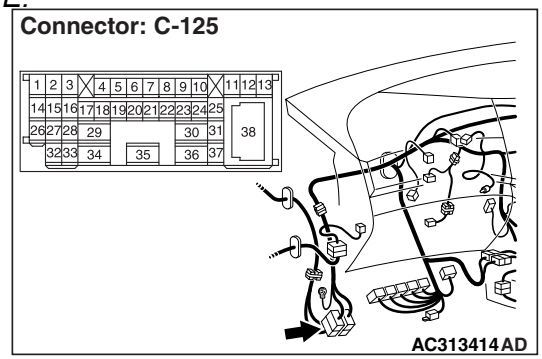


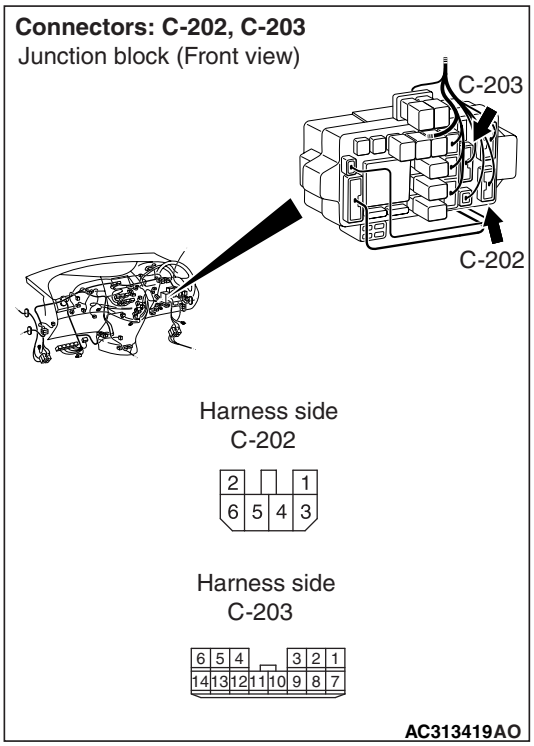


*Prior to the wiring harness inspection, check the junction block connectors C-202, C-203 and intermediate connector C-125 and repair if necessary.*

- Check the power supply line to the ignition switch (ACC) for open circuit.

**Q: Is the check result normal?**

**YES :** The trouble can be an intermittent malfunction (Refer to GROUP 00 – How to Cope with Intermittent Malfunction P.00-5).

**NO :** Repair the wiring harness.

**Step 10. Retest the system.**

The windshield wiper should now work normally at all.

**Q: Is the check result normal?**

**YES :** The trouble can be an intermittent malfunction (Refer to GROUP 00 – How to Cope with Intermittent Malfunction P.00-5).

**NO :** Replace the front-ECU.

Main Index
Group TOC

**INSPECTION PROCEDURE G-2: The windshield wipers does not work when the wiper switch is at "INT", "WASHER" or "MIST" position. However, the wipers work at low speed when the switch is at "LO" and "HI" position.**

**⚠ CAUTION**
**Whenever the ECU is replaced, ensure that the input and output signal circuits are normal.**

**Windshield Wiper Motor Drive Circuit**

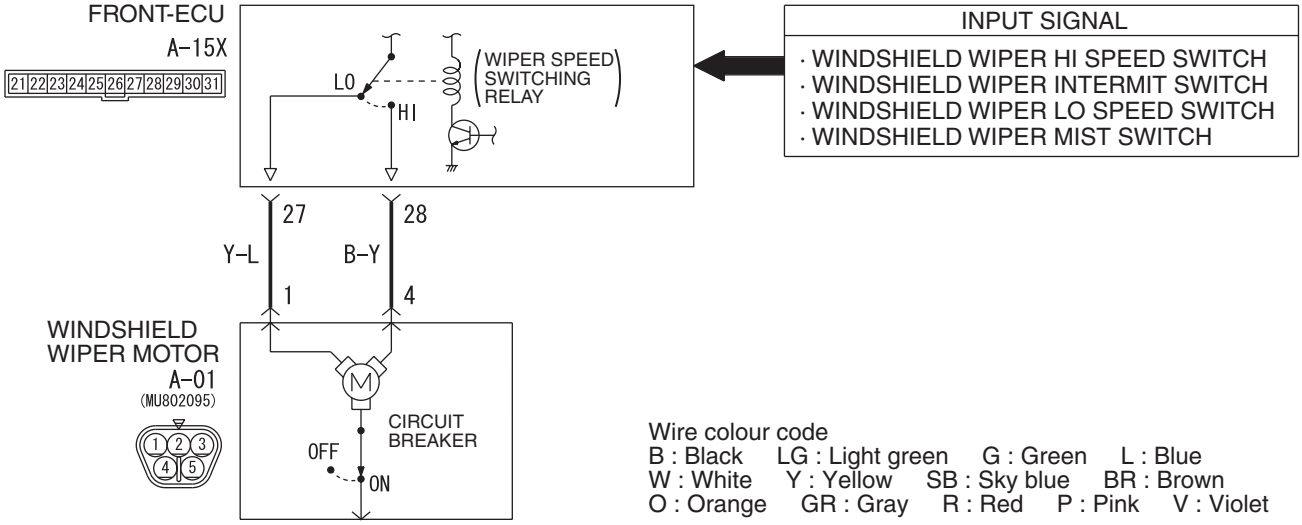


## COMMENTS ON TROUBLE SYMPTOM

The system may be at fail-safe mode as the SWS communication line is defective. If the ETACS-ECU does not receive the ignition switch (ACC) signal due to an open circuit in the SWS communication lines or other reasons when the ignition switch is at the ACC position, the system will enter the fail-safe mode.

## POSSIBLE CAUSES

- Malfunction of the column switch
- Malfunction of the front-ECU
- Damaged harness wires and connectors

## DIAGNOSIS PROCEDURE

**Step 1. ECU check by using the SWS monitor.**
Check that the power supply and earth lines to the column switch (column-ECU) and the front-ECU and the SWS communication lines are normal.

- Turn the ignition switch to the ACC position.

**ECUS TO BE CHECKED**

- COLUMN ECU
- FRONT ECU

**OK: "OK" are displayed for all the items**

**Q: Are the check result normal?**

**"OK" are displayed for all the items :** Go to Step 2.

**"NG" is displayed on the "COLUMN ECU" menu. :** Refer to Inspection Procedure A-2 "The ignition switch (IG1) signal is not received P.54E-51."

**"NG" is displayed on the "FRONT ECU" menu. :** Refer to Inspection Procedure A-4 "Communication with the front-ECU is not possible P.54E-60."

Main Index
Group TOC

**Step 2. Retest the system.**
The windshield wiper should now work normally.

**Q: Is the check result normal?**
**YES :** The trouble can be an intermittent malfunction (Refer to GROUP 00 – How to Cope with Intermittent Malfunction P.00-5).
**NO :** Replace the front-ECU.

## INSPECTION PROCEDURE G-3: The windshield wipers do not stop at the specified park position.

**⚠ CAUTION**
**Whenever the ECU is replaced, ensure that the input and output signal circuits are normal.**

**Windshield Wiper Automatic Stop Relay Circuit**

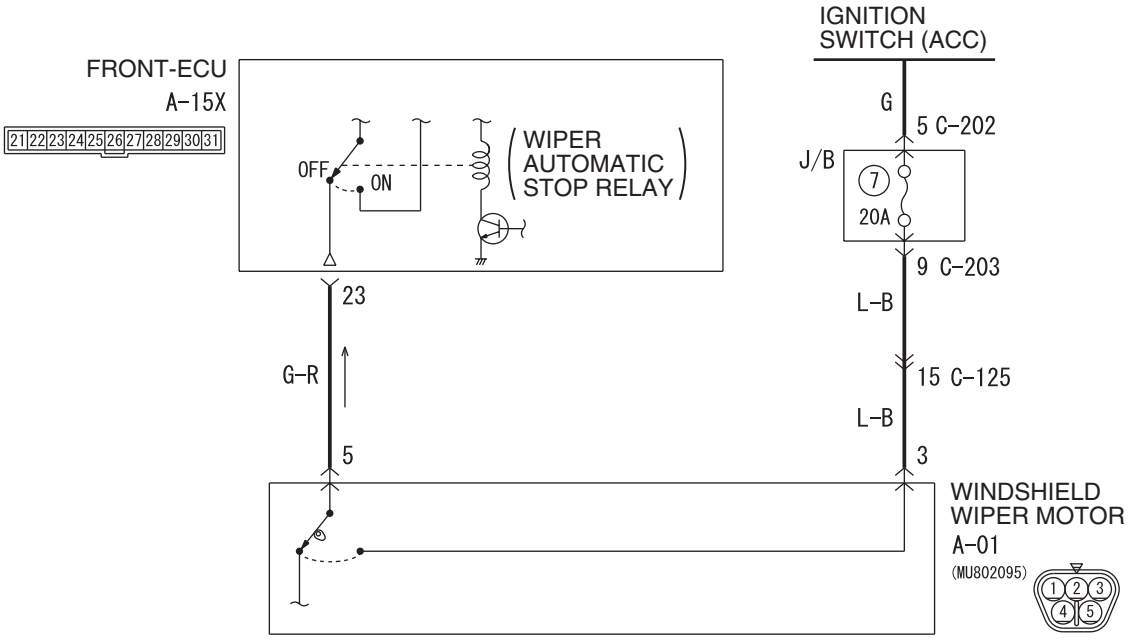


Wire colour code
B : Black LG : Light green G : Green L : Blue W : White Y : Yellow SB : Sky blue
BR : Brown O : Orange GR : Gray R : Red P : Pink V : Violet

W4X54X098A

## COMMENTS ON TROUBLE SYMPTOM

The windshield wiper motor or the front-ECU may be defective.

## POSSIBLE CAUSES

- Malfunction of the windshield wiper motor
- Malfunction of the front-ECU
- Damaged harness wires and connectors

Main Index
Group TOC

## DIAGNOSIS PROCEDURE

**Step 1. Connector check: A-01 windshield wiper motor connector.**

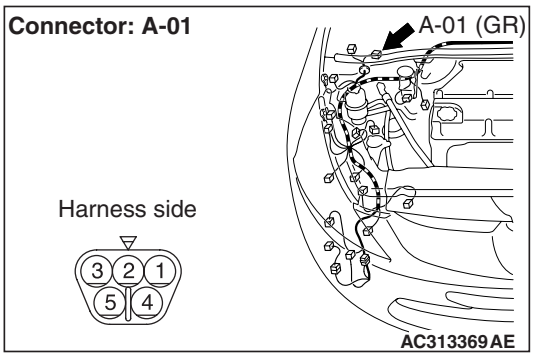


**Q: Is the check result normal?**
**YES :** Go to Step 2.
**NO :** Repair the connector.

**Step 2. Check the windshield wiper motor assembly.**
Refer to GROUP 51 – Windshield wiper P.51-20.

**Q: Is the check result normal?**
**YES :** Go to Step 3
**NO :** Replace the windshield wiper motor assembly.

**Step 3. Voltage measurement at the A-01 windshield wiper motor connector.**

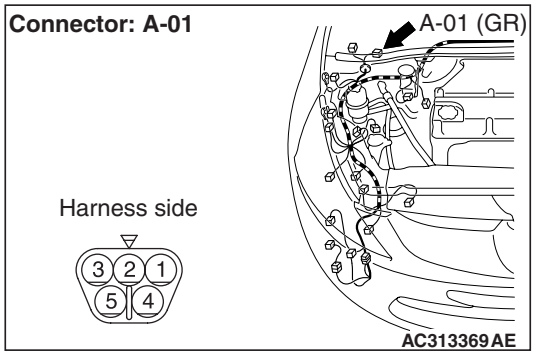


(1) Disconnect the connector, and measure at the wiring harness side.
(2) Ignition switch: ACC

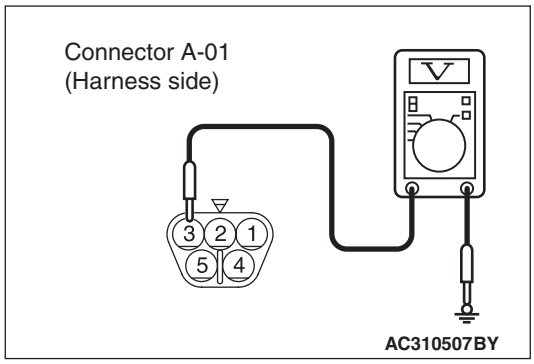


(3) Check the voltage between the A-01 windshield wiper motor connector terminal No.3 and body earth.

**OK: System voltage**

**Q: Is the check result normal?**
**YES :** Go to Step 5.
**NO :** Go to Step 4.

Main Index
Group TOC

**Step 4. Check the wiring harness between A-01 windshield wiper motor connector terminal No.3 to ignition switch (ACC).**

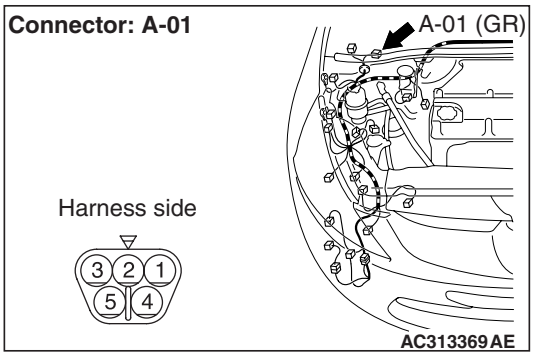


*NOTE:*

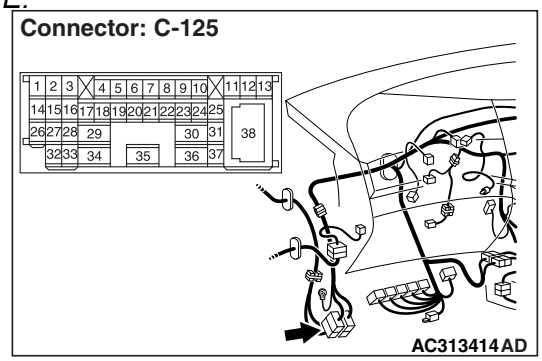


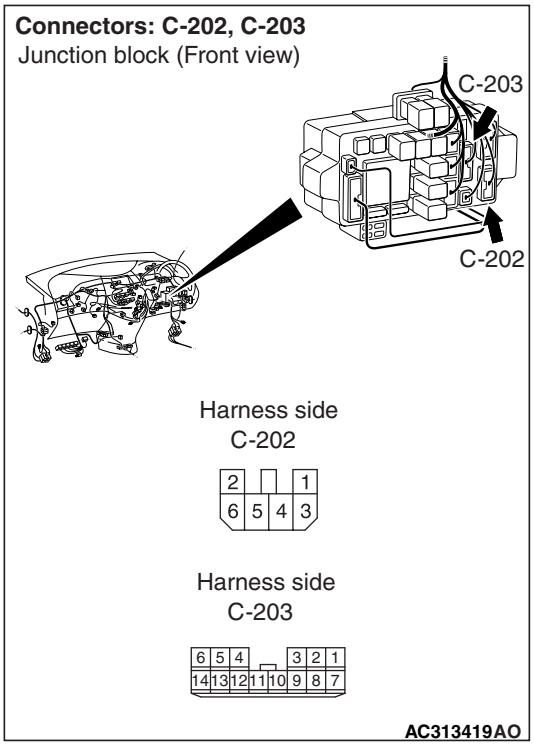


*Prior to the wiring harness inspection, check the junction connectors C-202, C-203, the intermediate connectors C-125, and repair if necessary.*

- Check the power supply line to ignition switch (ACC) for open circuit.

**Q: Is the check result normal?**
**YES :** The trouble can be an intermittent malfunction (Refer to GROUP 00 – How to Cope with Intermittent Malfunction P.00-5).
**NO :** Repair the wiring harness.

**Step 5. Connector check: A-15X front-ECU connector.**

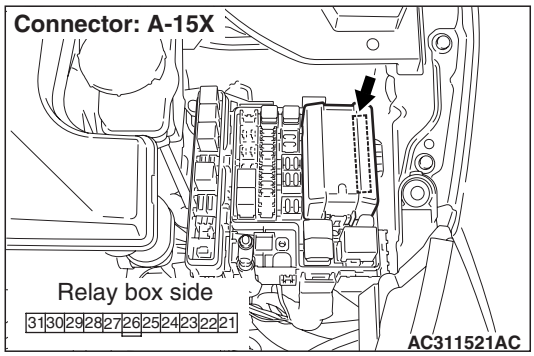


**Q: Is the check result normal?**
**YES :** Go to Step 6.
**NO :** Repair the connector.

**Step 6. Check the wiring harness between A-01 windshield wiper motor connector terminal No.5 to A-15X front-ECU connector terminal No.23.**

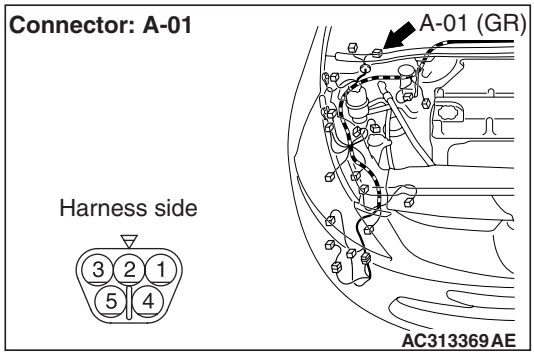


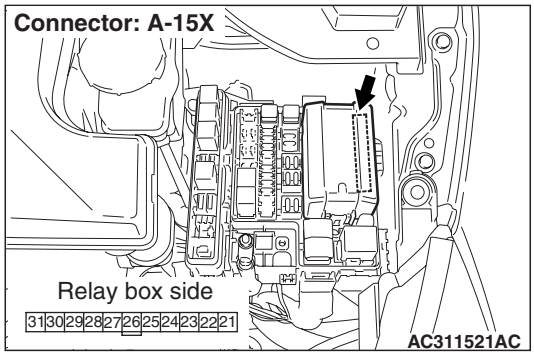


- Check the input signal lines.

**Q: Is the check result normal?**
**YES :** Go to Step 7.
**NO :** Repair the wiring harness.

Main Index
Group TOC

**Step 7. Retest the system.**
Check that the windshield wipers stop at the specified park position.

**Q: Is the check result normal?**
**YES :** The trouble can be an intermittent malfunction (Refer to GROUP 00 – How to Cope with Intermittent Malfunction P.00-5).
**NO :** Replace the front-ECU.

## INSPECTION PROCEDURE G-4: The windshield wipers do not work normally.

**⚠ CAUTION**
**Whenever the ECU is replaced, ensure that the input and output signal circuits are normal.**

**Windshield Wiper Motor Drive Circuit**

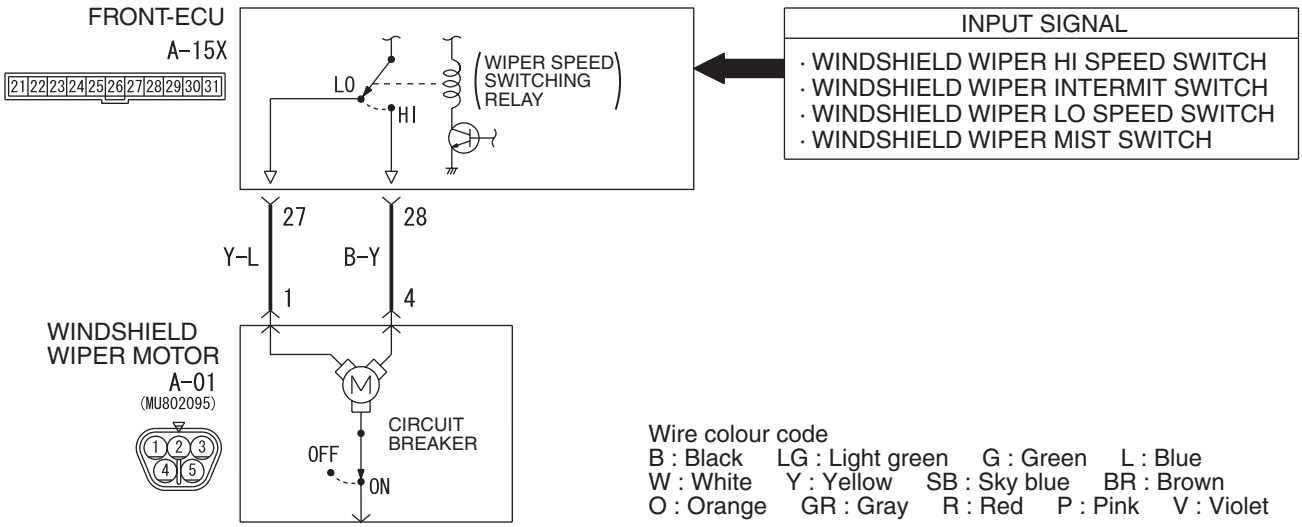


## COMMENTS ON TROUBLE SYMPTOM

The windshield wiper motor, the column switch or the front-ECU may be defective.

## POSSIBLE CAUSES

- Malfunction of the windshield wiper motor
- Malfunction of the column switch
- Malfunction of the front-ECU
- Damaged harness wires and connectors

Main Index
Group TOC

## DIAGNOSIS PROCEDURE

**Step 1. SWS monitor data list**
Check the SWS communication signal, which are related to the windshield wipers.

**<Selected item> Column switch (column-ECU)**
- Ignition switch: ON
- Move the windshield wiper switch to each position.

| Item No. | Item name | Normal condition |
|---|---|---|
| Item 31 | IG SW(ACC) | ON |
| Item 05 | INT WIPER SW | ON |
| Item 06 | LO WIPER SW | ON |
| Item 07 | HI WIPER SW | ON |
| Item 08 | MIST WIPER SW | ON |

**OK: Normal conditions are displayed for all the functions of the switch.**

**Q: Are the check result normal?**
**YES :** Go to Step 2.
**NO :** Refer to Inspection Procedure P-6 "The column switch (windshield wiper/washer and rear wiper washer switch) signal is not received P.54E-302."

**Step 2. Connector check: A-01 windshield wiper motor connector.**

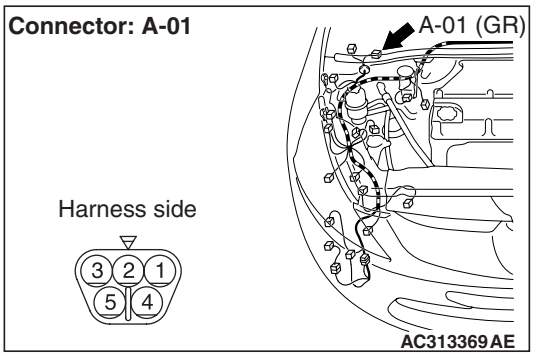


**Q: Is the check result normal?**
**YES :** Go to Step 3.
**NO :** Repair the defective connector.

**Step 3. Check the windshield wiper motor assembly.**
Refer to GROUP 51 – Windshield wiper P.51-20.

**Q: Is the check result normal?**
**YES :** Go to Step 4.
**NO :** Replace the windshield wiper motor assembly.

**Step 4. Retest the system.**
Check that the windshield wipers work normally by moving the switch to HI or MIST position.

**Q: Is the check result normal?**
**YES :** Go to Step 5.
**NO :** Go to Step 8.

**Step 5. Connector check: A-15X front-ECU connector.**

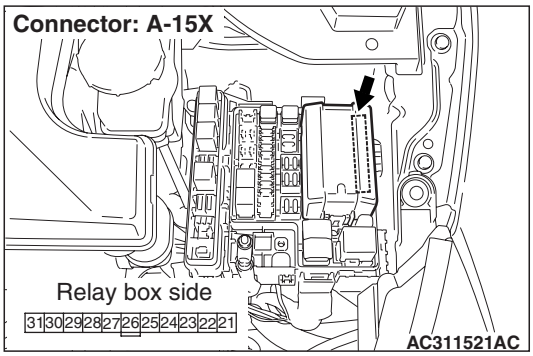


**Q: Is the check result normal?**
**YES :** Go to Step 6.
**NO :** Repair the defective connector.

**Step 6. Check the wiring harness between A-15X front-ECU connector terminal No.27 to A-01 windshield wiper motor connector terminal No.1.**

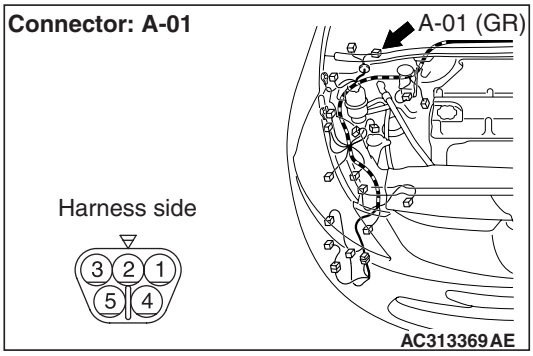


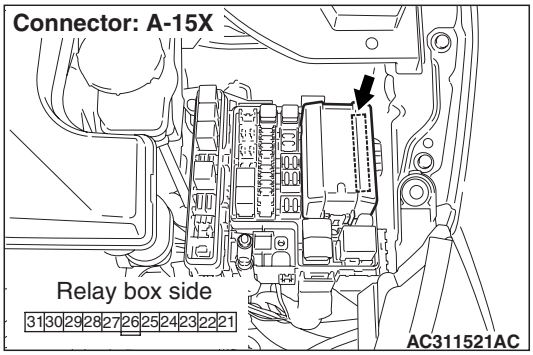


- Check the output lines for open circuit.

**Q: Is the check result normal?**
**YES :** Go to Step 7.
**NO :** Repair the wiring harness.

Main Index
Group TOC

**Step 7. Retest the system.**

Check that the windshield wipers work normally by moving the switch to each position.

**Q: Is the check result normal?**

**YES :** The trouble can be an intermittent malfunction (Refer to GROUP 00 – How to Cope with Intermittent Malfunction P.00-5).

**NO :** Replace the front-ECU.

**Step 8. Connector check: A-15X front-ECU connector.**

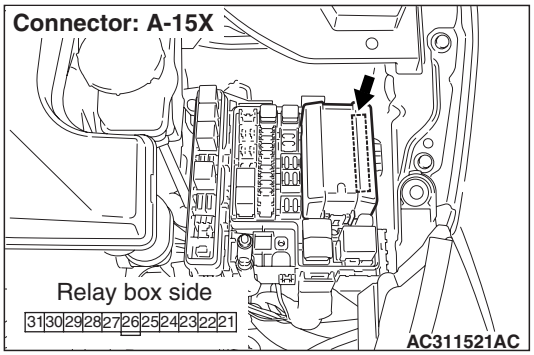


**Q: Is the check result normal?**

**YES :** Go to Step 9.

**NO :** Repair the defective connector.

**Step 9. Check the wiring harness between A-15X front-ECU connector terminal No.28 to A-01 windshield wiper motor connector terminal No.4.**

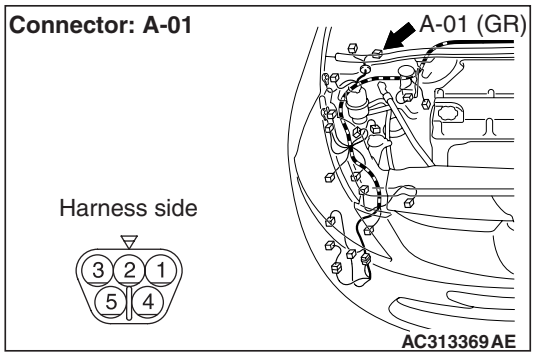


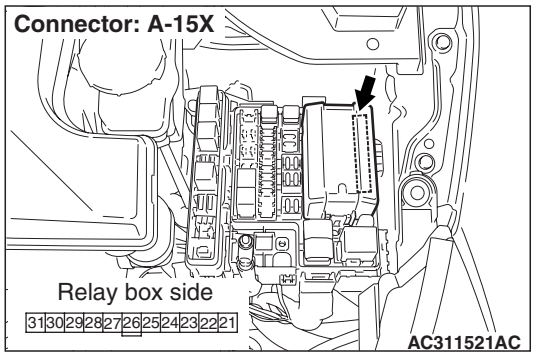


- Check the output lines for open circuit.

**Q: Is the check result normal?**

**YES :** Go to Step 10.

**NO :** Repair the wiring harness.

**Step 10. Retest the system.**

Check that the windshield wipers work normally by moving the switch to each position.

**Q: Is the check result normal?**

**YES :** The trouble can be an intermittent malfunction (Refer to GROUP 00 – How to Cope with Intermittent Malfunction P.00-5).

**NO :** Replace the front-ECU.

Main Index
Group TOC

**INSPECTION PROCEDURE G-5: The intermittent wiper interval can not be adjusted by operating the windshield intermittent wiper volume control.**

**⚠ CAUTION**
**Whenever the ECU is replaced, ensure that the input and output signal circuits are normal.**

**Windshield Wiper Intermittent Volume Input Signal**

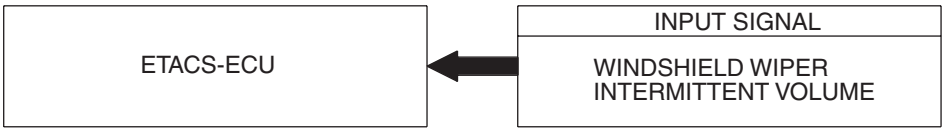


W4X54E165A

## COMMENTS ON TROUBLE SYMPTOM

The column switch or the front-ECU may be defective.

## POSSIBLE CAUSES

- Malfunction of the column switch
- Malfunction of the front-ECU
- Damaged harness wires and connectors

## DIAGNOSIS PROCEDURE

**Step 1. SWS monitor data list**

- Rotate the windshield intermittent wiper volume when the vehicle is stopped.

*NOTE: Also check that the windshield wiper interval changes smoothly when the windshield intermittent wiper interval adjusting knob is rotated from "SLOW" to "FAST" positions.*

| Item No. | Item name | Normal condition |
|---|---|---|
| Item 37 | INT WIPER TIME | 4.6 – 32.0 s |

**OK: Normal condition is displayed.**

**Q: Is the check result normal?**
**YES :** Go to Step 2.
**NO :** Refer to Inspection Procedure P-7 "The windshield intermittent wiper volume signal is not received P.54E-303."

**Step 2. Retest the system.**

Check that the windshield intermittent wiper interval can be adjusted by operating the windshield intermittent wiper volume control.

**OK: The intermittent wiper interval is changed as the intermittent wiper volume is rotated.**

**Q: Is the check result normal?**
**YES :** The trouble can be an intermittent malfunction (Refer to GROUP 00 – How to Cope with Intermittent Malfunction P.00-5).
**NO :** Replace the front-ECU.

Main Index
Group TOC

**INSPECTION PROCEDURE G-6: The intermittent wiper interval is not changed according to the vehicle speed.**

**⚠ CAUTION**
**Whenever the ECU is replaced, ensure that the input and output signal circuits are normal.**

**Variable Intermittent Wiper Control Circuit**

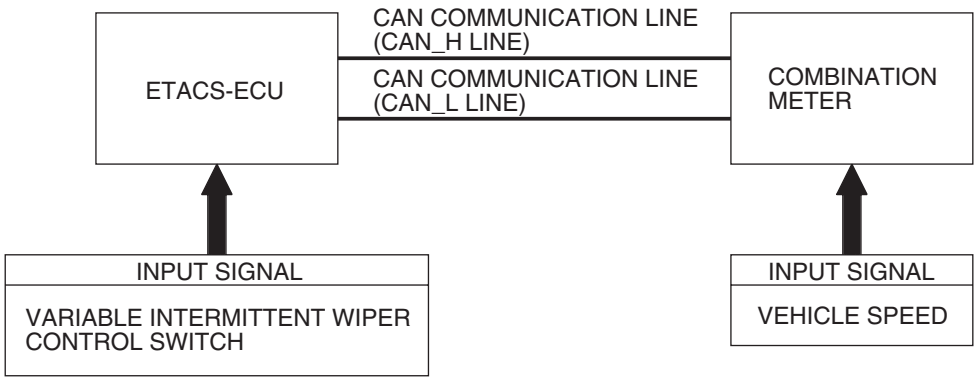


W4X54E155A

## COMMENTS ON TROUBLE SYMPTOM

The ETACS-ECU calculates the intermittent wiper interval according to the vehicle speed signal which is sent by the engine-A/T-ECU.
If the intermittent wiper interval does not depend on the vehicle speed, the input circuit of the vehicle speed signal and the ETACS-ECU may be defective.

## POSSIBLE CAUSES

- Malfunction of the ETACS-ECU
- Damaged harness wires and connectors

## DIAGNOSIS PROCEDURE

**Step 1. Check the operation by operating the intermittent wiper volume.**
Check that the windshield intermittent wiper interval can be adjusted by operating the windshield intermittent wiper volume control.

**Q: Is the check result normal?**
**YES :** Go to Step 2.
**NO :** Refer to Inspection Procedure G-5 "The intermittent wiper interval can not be adjusted by operating the windshield intermittent wiper volume control P.54E-158."

**Step 2. Customise function by using the SWS monitor**
Use the SWS monitor customise function to confirm that "Wiper speed-sensitive operation" is set to "With function".

**Q: Is the check result normal?**
**YES :** Go to Step 3.
**NO :** Use the SWS monitor customise function to set the "Wiper speed-sensitive operation" to "With function" (Refer to P.54E-353).

**Step 3. M.U.T.-III CAN bus diagnostics**
Use the M.U.T.-III to diagnose the CAN bus lines.

**Q: Is the check result normal?**
**YES :** Go to Step 4.
**NO :** Repair the CAN bus line (Refer to GROUP 54F, Diagnosis P.54F-13).

Main Index
Group TOC

**Step 4. ECU check by using the SWS monitor.**
Check that the power supply and earth lines to the ETACS-ECU and the SWS communication lines are normal.

- Ignition switch: ON

**ECU TO BE CHECKED**

- ETACS-ECU

**OK: "OK" is displayed on the "ETACS-ECU" menu.**

**Q: Is the check result normal?**
**YES :** Go to Step 5.
**NO :** Refer to Inspection Procedure A-3 "Communication with the ETACS-ECU is not possible P.54E-55."

**Step 5. ETACS ANALOG data by using the SWS monitor.**
Check the ETACS-ECU input signal related to the vehicle speed-dependent intermittent wiper interval.

- Set the simulated vehicle speed at approximately 10km/h.

| Item No. | Item name | Normal condition |
|---|---|---|
| Item 3 | Vehicle speed | 8 to 10 km/h |

**OK: Normal condition is displayed.**

**Q: Is the check result normal?**
**YES :** Go to Step 6.
**NO :** Refer to inspection procedure P-21 "The vehicle speed signal is not received P.54E-343."

**Step 6. Retest the system.**
(1) Replace the ETACS-ECU.
(2) Check that the vehicle speed-dependent intermittent wiper system should work normally.

**Q: Is the check result normal?**
**YES :** The trouble can be an intermittent malfunction (Refer to GROUP 00 – How to Cope with Intermittent MalfunctionP.00-5).
**NO :** Replace the combination meter.

Main Index
Group TOC

## INSPECTION PROCEDURE G-7: The windshield washer does not work.

**⚠ CAUTION**
**Whenever the ECU is replaced, ensure that the input and output signal circuits are normal.**

**Windshield Washer Motor Circuit**

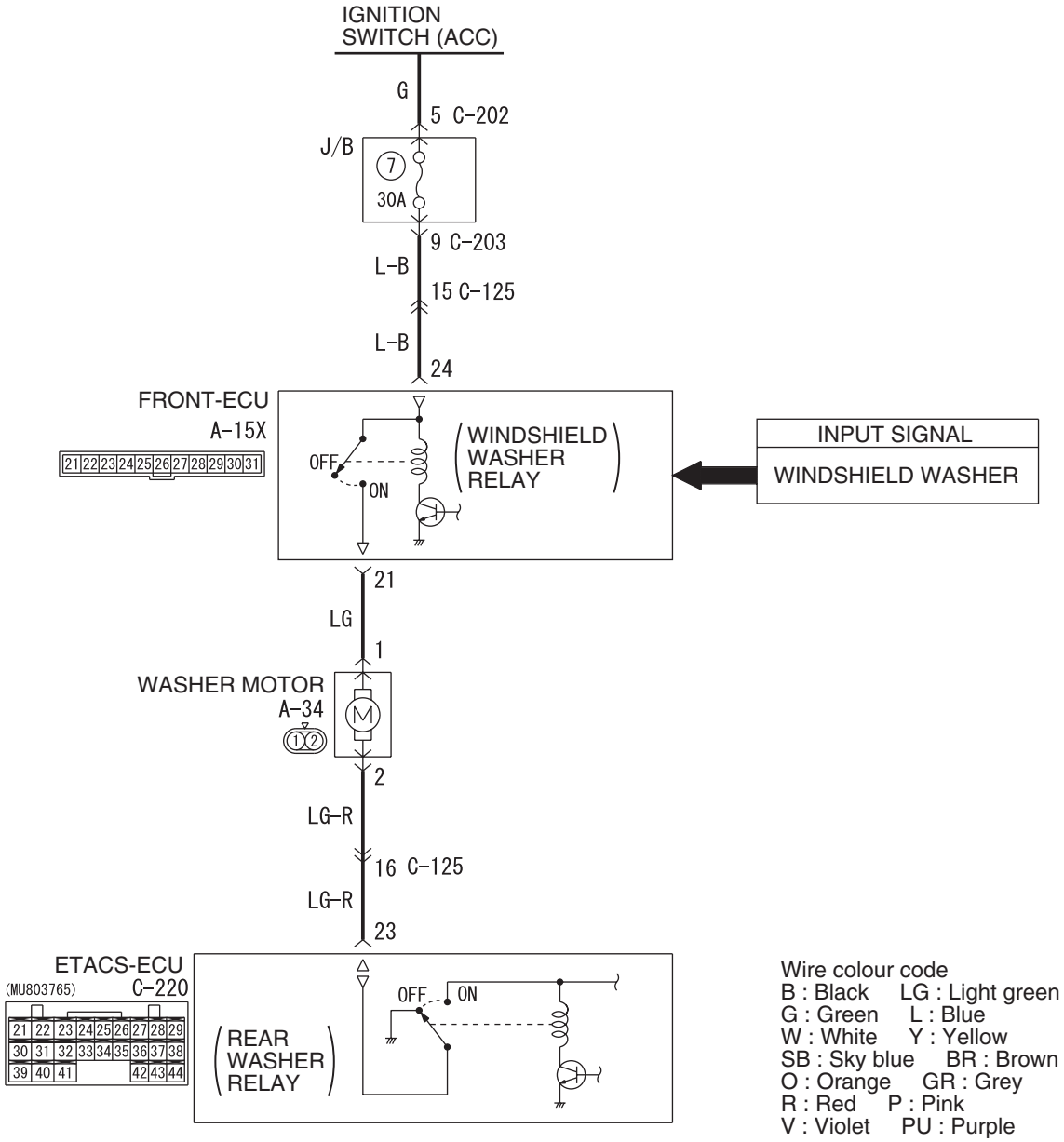


## COMMENTS ON TROUBLE SYMPTOM

The washer motor, the column switch, the front-ECU or the ETACS-ECU may be defective.

## POSSIBLE CAUSES

- Malfunction of the washer motor
- Malfunction of the column switch
- Malfunction of the front-ECU
- Malfunction of the ETACS-ECU
- Damaged harness wires and connectors

Main Index
Group TOC

## DIAGNOSIS PROCEDURE

**Step 1. Check the operation of the windshield wipers.**
Check that the windshield wipers work normally.

**Q: Is the check result normal?**
**YES :** Go to Step 2.
**NO :** Refer to Inspection Procedure G-1 "The windshield wipers do not work at all P.54E-147."

**Step 2. ECU check by using the SWS monitor.**
Check that the power supply and earth lines to the column switch (column-ECU), the ETACS-ECU and the front-ECU and the SWS communication lines are normal.
- Turn the ignition switch to the ACC position.

**ECUS TO BE CHECKED**
- COLUMN ECU
- FRONT ECU
- ETACS ECU

**OK: "OK" is displayed for all the items**

**Q: Is the check result normal?**
**"OK" is displayed for all the items :** Go to Step 3.
**"NG" is displayed on the "COLUMN ECU" menu. :** Refer to Inspection Procedure A-2 "Communication with the column switch (column-ECU) is not possible P.54E-51."
**"NG" is displayed on the "FRONT ECU" menu. :** Refer to Inspection Procedure A-4 "Communication with the front-ECU is not possible P.54E-60."
**"NG" is displayed on the "ETACS ECU" menu. :** Refer to Inspection Procedure A-3 "Communication with the ETACS-ECU is not possible P.54E-55."

**Step 3. Function diagnosis by using the SWS monitor.**
Check the SWS communication signal, which are related to the windshield washer function.

**<Selected item> F.WIPER WASH**
- Turn the ignition switch to the ACC position.
- Windshield washer switch: ON

| Item No. | Item name | Normal condition |
|---|---|---|
| Item 09 | FRONT WASH. SW | ON |

**OK: Normal condition is displayed.**

**Q: Is the check result normal?**
**YES :** Go to Step 4.
**NO :** Replace the column switch.

**Step 4. Connector check: A-34 washer motor connector.**

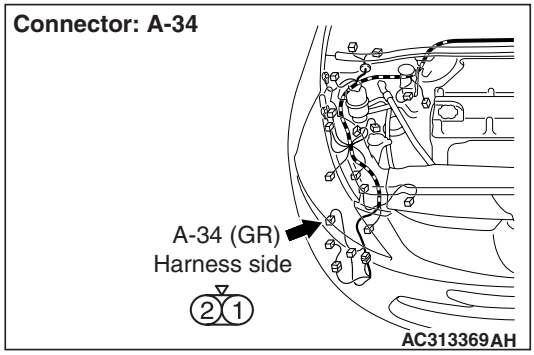


**Q: Is the check result normal?**
**YES :** Go to Step 5.
**NO :** Repair the connector.

**Step 5. Check the washer motor assembly.**
Refer to GROUP 51 – Windshield washerP.51-23.

**Q: Is the check result normal?**
**YES :** Go to Step 6.
**NO :** Replace the washer motor.

**Step 6. Connector check: C-220 ETACS-ECU connector.**

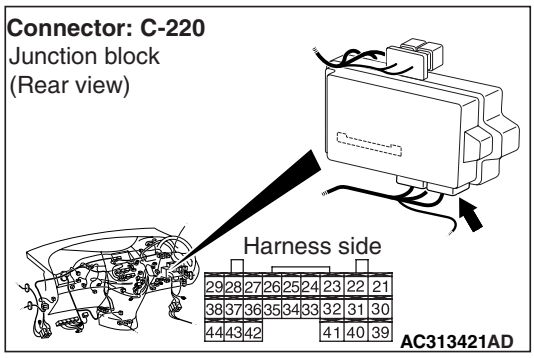


**Q: Is the check result normal?**
**YES :** Go to Step 7.
**NO :** Repair the connector.

Main Index
Group TOC

**Step 7. Check the wiring harness between A-34 washer motor connector terminal No.2 to C-220 ETACS-ECU connector terminal No.23.**

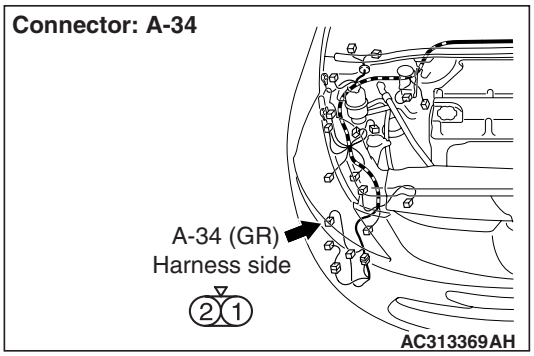


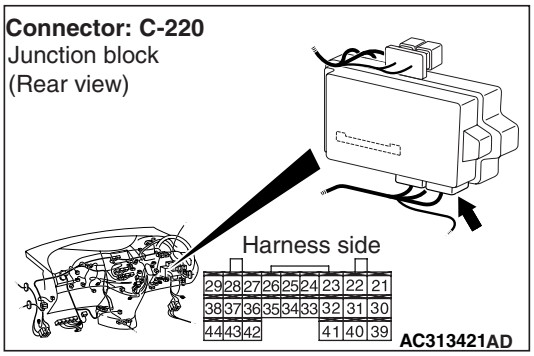


*NOTE:*

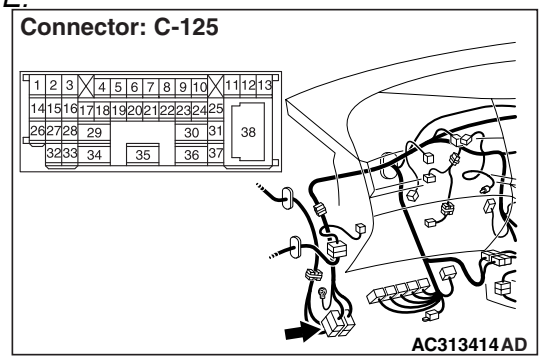


*Prior to the wiring harness inspection, check the intermediate connector C-125 and repair if necessary.*

- Check the earth wires for open circuit.

**Q: Is the check result normal?**
**YES :** Go to Step 8.
**NO :** Repair the wiring harness.

**Step 8. Connector check: A-15X front-ECU connector.**

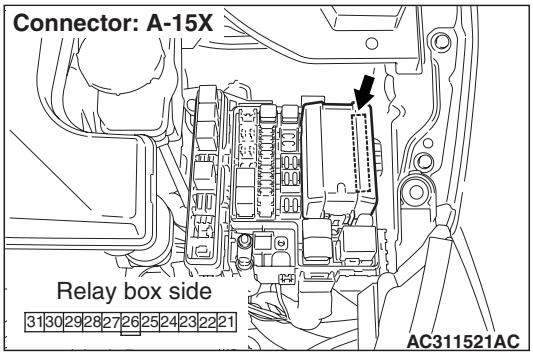


**Q: Is the check result normal?**
**YES :** Go to Step 9.
**NO :** Repair the connector.

**Step 9. Check the wiring harness between A-34 washer motor connector terminal No.1 to A-15X front-ECU connector terminal No.21.**

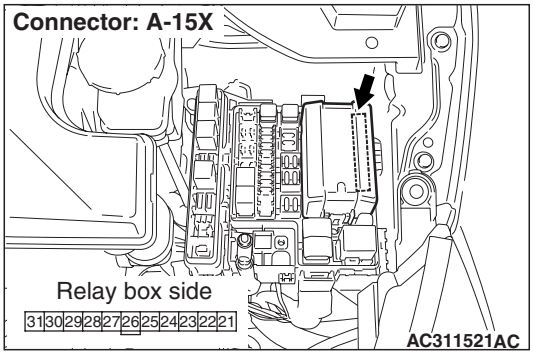


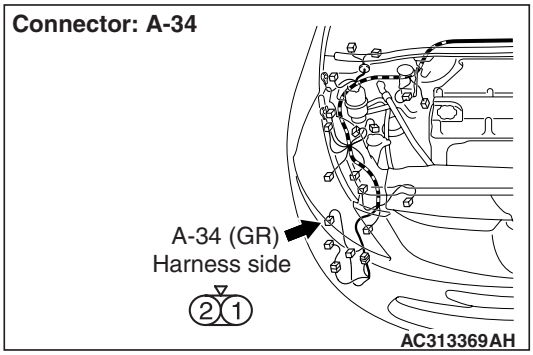


- Check the power supply line for open circuit.

**Q: Is the check result normal?**
**YES :** Go to Step 10.
**NO :** Repair the wiring harness.

Main Index
Group TOC

**Step 10. Replace the front ECU, and then check its operation.**

Replace the front ECU, and then check that the windshield washer works normally.

(1) Replace the front ECU.
(2) Ignition switch: ON
(3) The windshield washer should now work normally.

**Q: Is the check result satisfactory?**

**YES :** The trouble can be an intermittent malfunction (Refer to GROUP 00 – How to Cope with Intermittent Malfunction P.00-5).

**NO :** Replace the ETACS-ECU.

Main Index
Group TOC

# REAR WIPER AND WASHER

## INSPECTION PROCEDURE H-1: The rear wiper does not work at all.

**⚠ CAUTION**
**Whenever the ECU is replaced, ensure that the input and output signal circuits are normal.**

**Rear Wiper Drive Circuit**

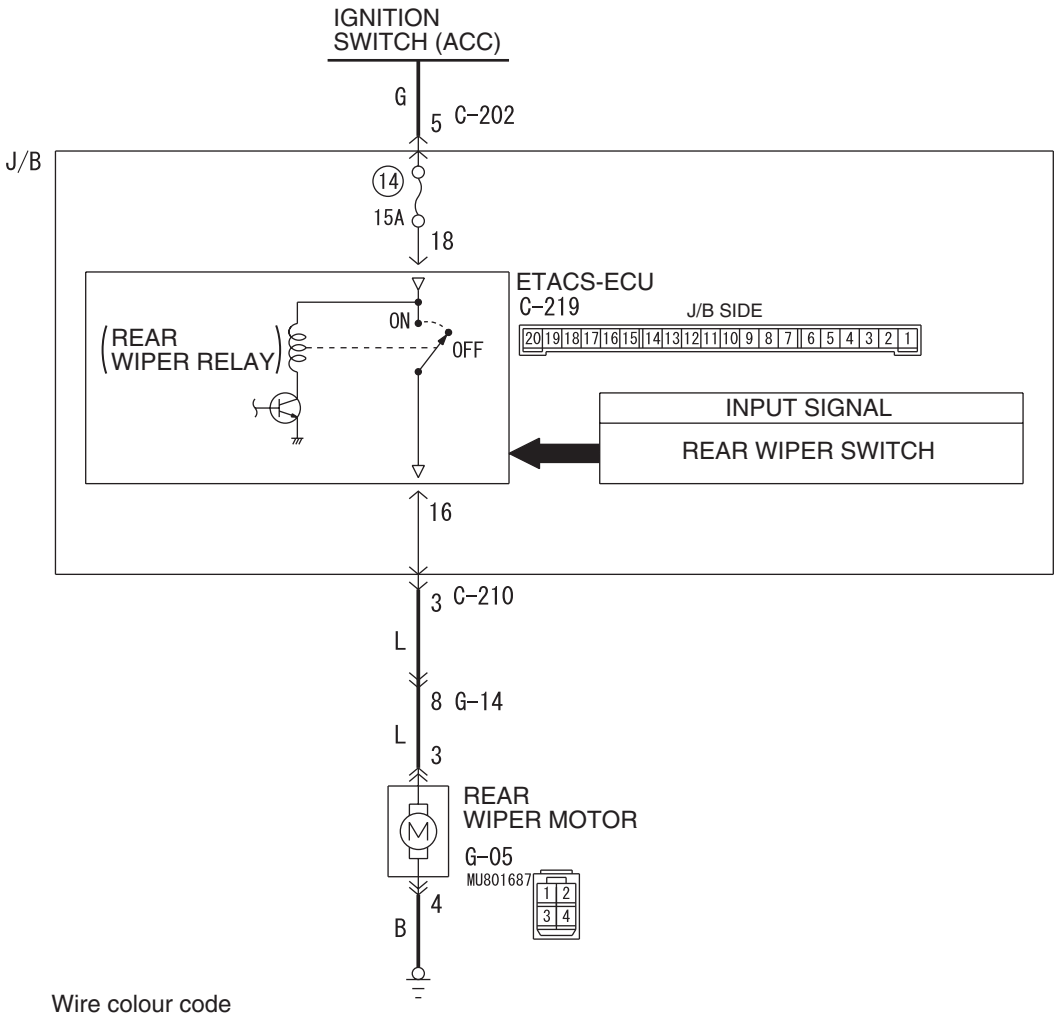


Wire colour code
B : Black LG : Light green G : Green L : Blue W : White Y : Yellow SB : Sky blue
BR : Brown O : Orange GR : Gray R : Red P : Pink V : Violet

W4X54E087A

## COMMENTS ON TROUBLE SYMPTOM

If the rear wiper does not work normally, the input signal circuits to the components below, the rear wiper motor or the ETACS-ECU may be defective.

- Ignition switch (ACC)
- Rear wiper switch

## POSSIBLE CAUSES

- Malfunction of the rear wiper motor
- Malfunction of the column switch
- Malfunction of the ETACS-ECU
- Damaged harness wires and connectors

Main Index
Group TOC

## DIAGNOSIS PROCEDURE

**Step 1. ECU check by using the SWS monitor.**
Check that the power supply and earth lines to the column switch (column-ECU) and the ETACS-ECU and the SWS communication lines are normal.
- Ignition switch: ACC

**ECUS TO BE CHECKED**
- COLUMN ECU
- ETACS ECU

**OK: "OK" are displayed for all the items**

**Q: Are the check result normal?**
**"OK" are displayed for all the items :** Go to Step 2.
**"NG" is displayed on the "COLUMN ECU" menu. :** Refer to Inspection Procedure A-2 "Communication with the column switch (column-ECU) is not possible P.54E-51."
**"NG" is displayed on the "ETACS ECU" menu. :** Refer to Inspection Procedure A-3 "Communication with the ETACS-ECU is not possible P.54E-55."

**Step 2. Function diagnosis by using the SWS monitor**
Check the SWS communication signal, which are related to the rear wiper function.

**<Selected item> REAR WIPER**
- Ignition switch: ACC
- Rear wiper switch: ON

| Item No. | Item name | Normal condition |
|---|---|---|
| Item 13 | REAR WIPER SW | ON |
| Item 31 | IG SW (ACC) | ON |

**OK: Normal conditions are displayed for all the items.**

**Q: Are the check result normal?**
**Normal conditions are displayed for all the items :** Go to Step 3.
**Normal condition is not displayed for item No.13 :** Replace the column switch.
**Normal condition is not displayed for item No.31 :** Refer to inspection procedure P-1 "The ignition switch (ACC) signal is not received P.54E-291."

**Step 3. Connector check: G-05 rear wiper motor connector.**

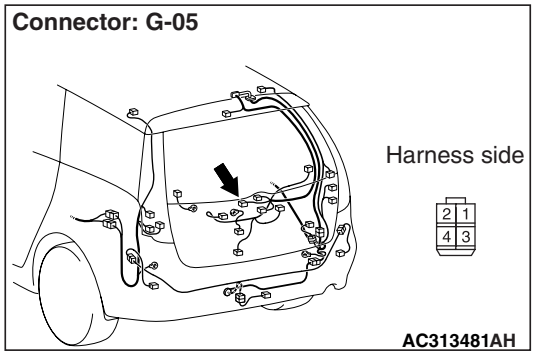


**Q: Is the check result normal?**
**YES :** Go to Step 4.
**NO :** Repair the connector.

**Step 4. Check the rear wiper motor.**
Refer to GROUP 51 – Rear wiper and washer P.51-27.

**Q: Is the check result normal?**
**YES :** Go to Step 5.
**NO :** Replace the rear wiper motor.

**Step 5. Resistance measurement at the G-05 rear wiper motor connector.**

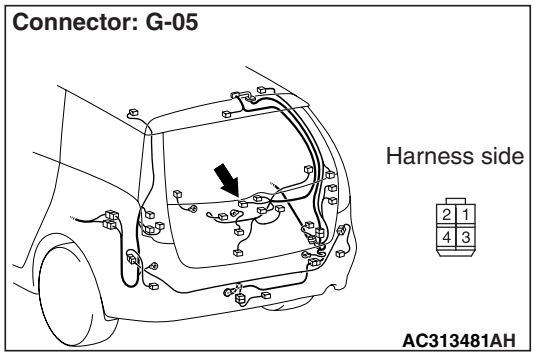


(1) Disconnect the connector, and measure at the wiring harness side.

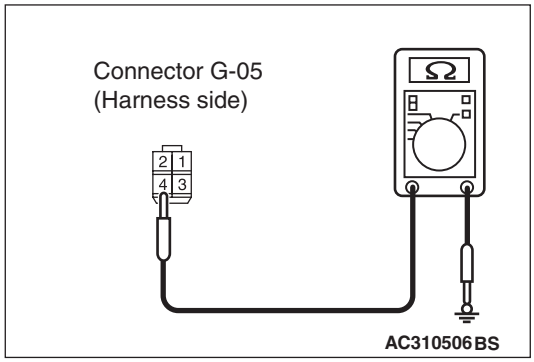


(2) Resistance between G-05 rear wiper motor connector terminal No.4 and body earth

**OK: 2 Ω or less**

Main Index
Group TOC

**Q: Is the check result normal?**
**YES :** Go to Step 7.
**NO :** Go to Step 6.

## Step 6. Check the wiring harness between G-05 rear wiper motor connector terminal No.4 to body earth.

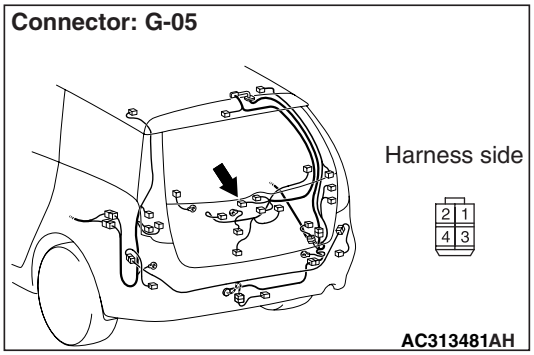


- Check the earth line for open or short circuit.

**Q: Is the check result normal?**
**YES :** The trouble can be an intermittent malfunction (Refer to GROUP 00 – How to Cope with Intermittent Malfunction P.00-5).
**NO :** Repair the wiring harness.

## Step 7. Connector check: C-219 ETACS-ECU connector.

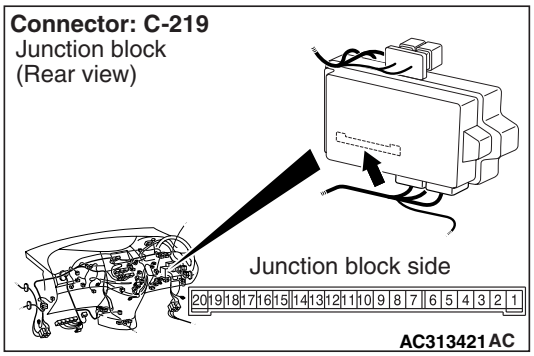


**Q: Is the check result normal?**
**YES :** Go to Step 8.
**NO :** Repair the connector.

## Step 8. Check the wiring harness between C-219 ETACS-ECU connector terminal No.16 to G-05 rear wiper motor connector terminal No.3.

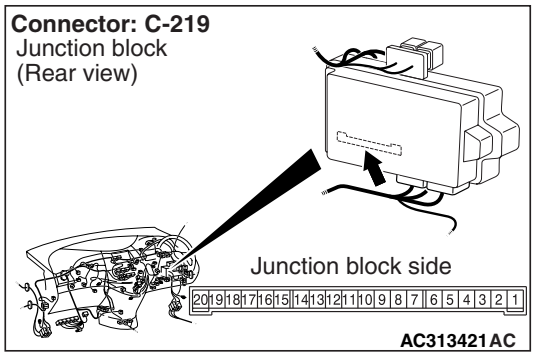


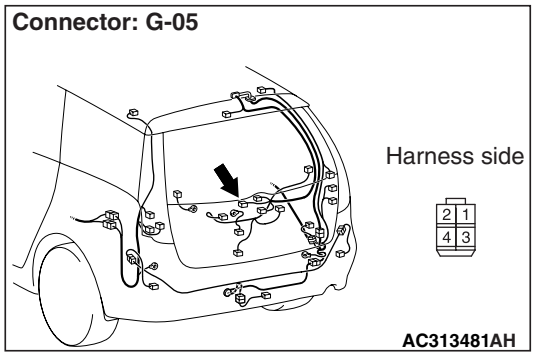


*NOTE:*

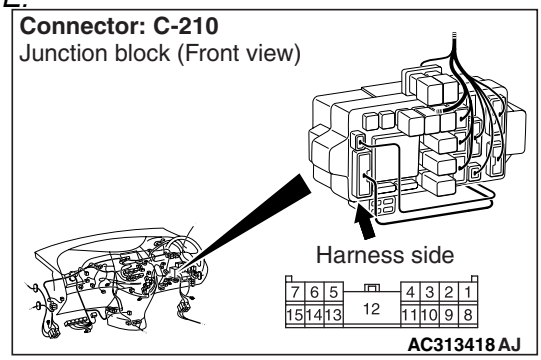


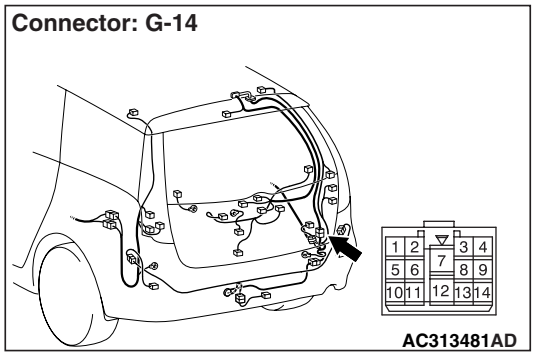


*Prior to the wiring harness inspection, check intermediate connector G-14 and junction block connectors C-210, and repair if necessary.*

- Check the output line.

**Q: Is the check result normal?**
**YES :** Go to Step 9.
**NO :** Repair the wiring harness.

Main Index
Group TOC

**Step 9. Retest the system.**

Check that the rear wiper works normally.

**Q: Is the check result normal?**

**YES :** The trouble can be an intermittent malfunction (Refer to GROUP 00 – How to Cope with Intermittent Malfunction P.00-5).

**NO :** Replace the ETACS-ECU.

## INSPECTION PROCEDURE H-2: The rear wiper does not stop at the specified park position.

**⚠ CAUTION**

**Whenever the ECU is replaced, ensure that the input and output signal circuits are normal.**

**Rear Wiper Auto-stop Signal Input**

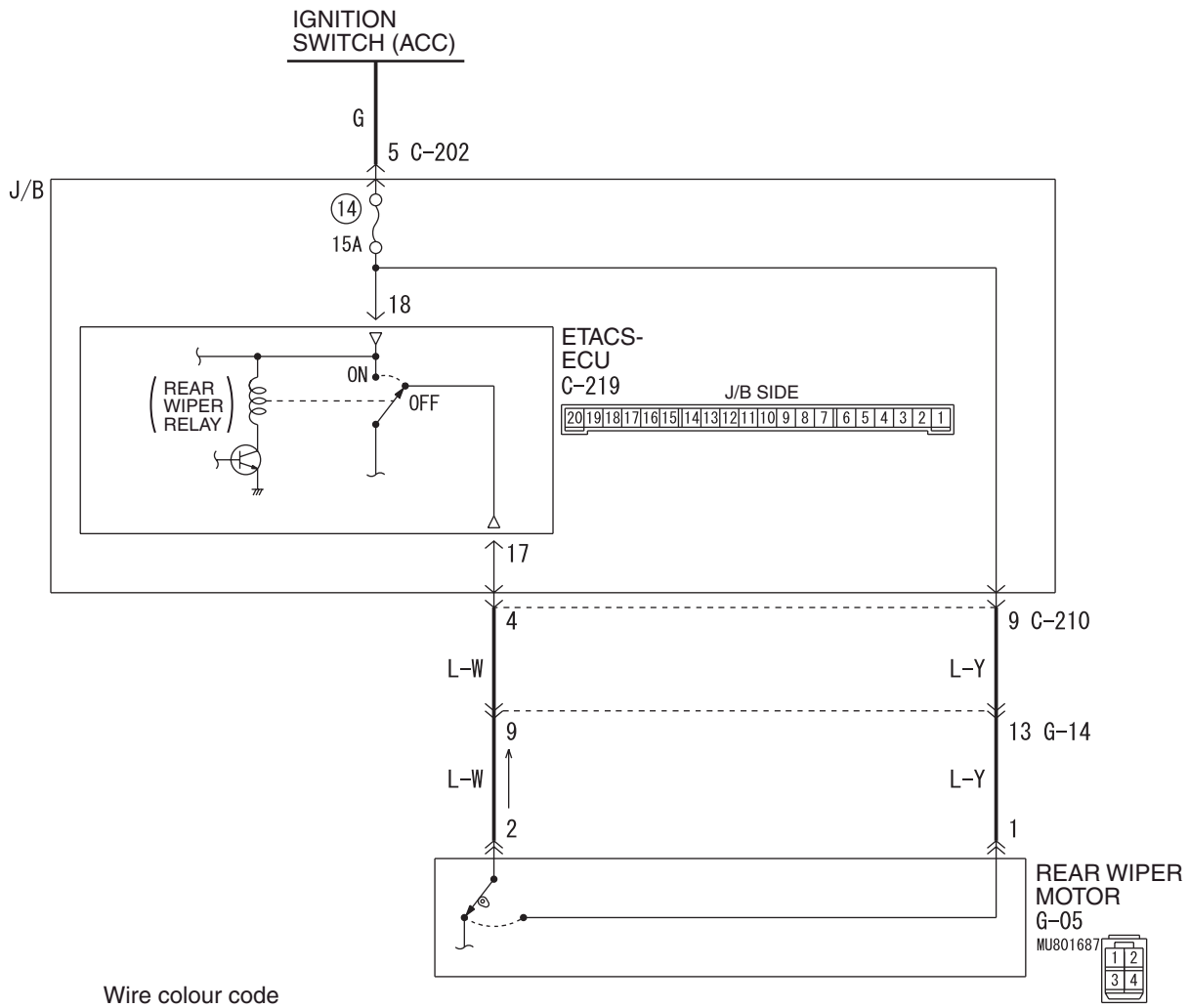


Wire colour code
B : Black LG : Light green G : Green L : Blue W : White Y : Yellow SB : Sky blue
BR : Brown O : Orange GR : Gray R : Red P : Pink V : Violet

W4X54E088A

Main Index
Group TOC

## COMMENTS ON TROUBLE SYMPTOM

If the rear wiper does not stop normally within the predetermined range, the rear wiper motor or the ETACS-ECU may be defective.

## POSSIBLE CAUSES

- Malfunction of the rear wiper motor
- Malfunction of the ETACS-ECU
- Damaged harness wires and connectors

## DIAGNOSIS PROCEDURE

**Step 1. Connector check: G-05 rear wiper motor connector.**

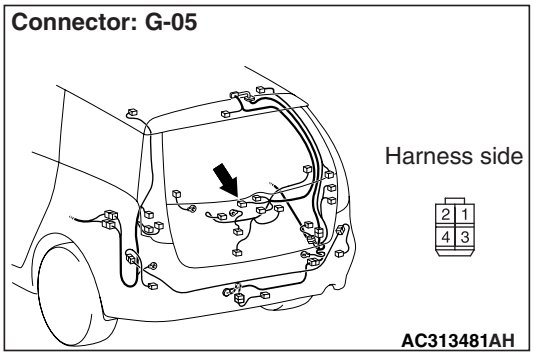


**Q: Is the check result normal?**
**YES :** Go to Step 2.
**NO :** Repair the connector.

**Step 2. Check the rear wiper motor.**

Refer to GROUP 51 – Rear wiper and washer P.51-27.

**Q: Is the check result normal?**
**YES :** Go to Step 3.
**NO :** Replace the rear wiper motor.

**Step 3. Voltage measurement at the G-05 rear wiper motor connector.**

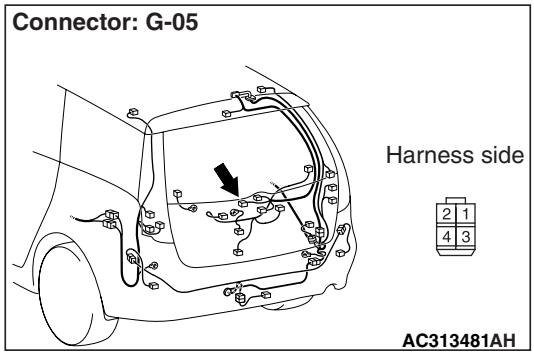


(1) Disconnect the connector, and measure at the wiring harness side.
(2) Ignition switch: ACC

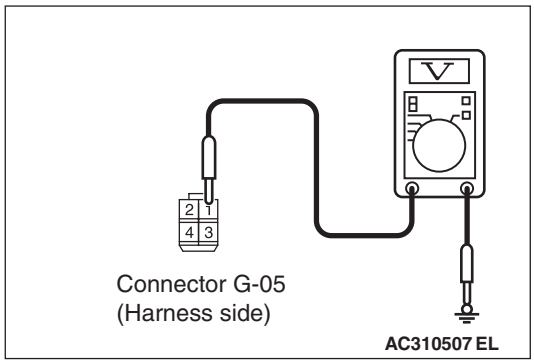


(3) Check the voltage between G-05 rear wiper motor connector terminal No.1 and body earth

**OK: System voltage**

**Q: Is the check result normal?**
**YES :** Go to Step 5.
**NO :** Go to Step 4.

Main Index
Group TOC

**Step 4. Check the wiring harness between ignition switch (ACC) to G-05 rear wiper motor connector terminal No.1.**

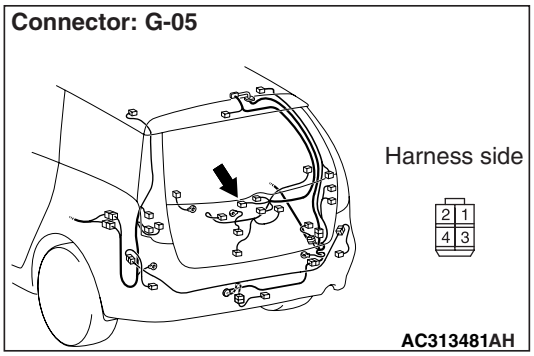


*NOTE:*

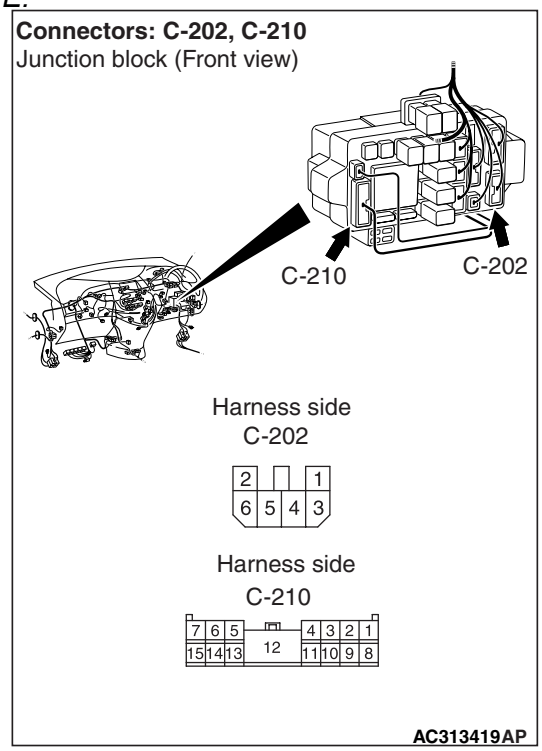


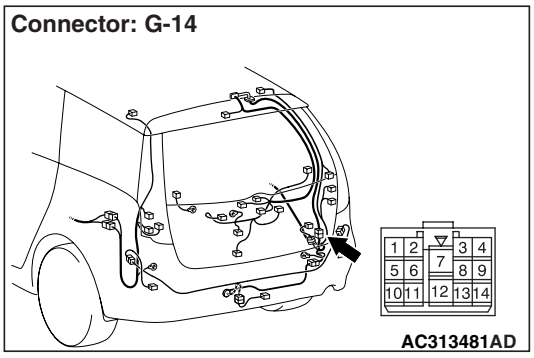


*Prior to the wiring harness inspection, check intermediate connector G-14 and junction block connectors C-202, C-210, and repair if necessary.*

- Check the power supply line for open or short circuit.

**Q: Is the check result normal?**

**YES :** The trouble can be an intermittent malfunction (Refer to GROUP 00 – How to Cope with Intermittent Malfunction P.00-5).

**NO :** Repair the wiring harness.

**Step 5. Connector check: C-219 ETACS-ECU connector.**

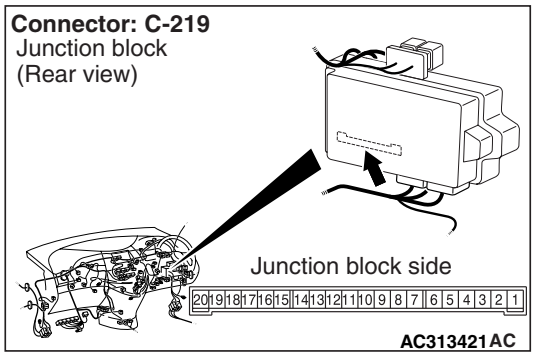


**Q: Is the check result normal?**

**YES :** Go to Step 6.

**NO :** Repair the connector.

Main Index
Group TOC

**Step 6. Check the wiring harness between C-219 ETACS-ECU connector terminal No.17 to G-05 rear wiper motor connector terminal No.2.**

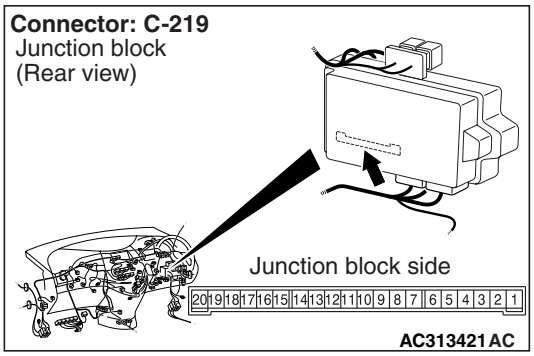


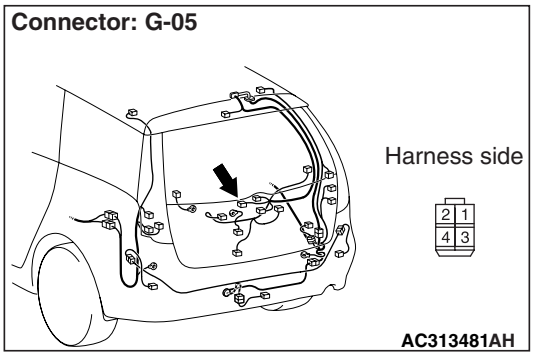


*NOTE:*

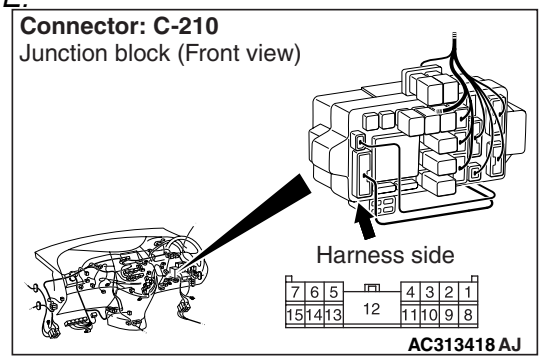


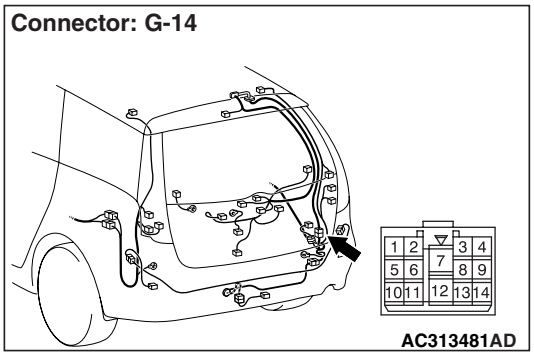


*Prior to the wiring harness inspection, check intermediate connector G-14, junction block connectors C-210, and repair if necessary.*

- Check the power supply line for open or short circuit.

**Q: Is the check result normal?**
**YES :** Go to Step 7.
**NO :** Repair the wiring harness.

**Step 7. ETACS switch data by using the SWS monitor.**

- Ignition switch: ACC or ON
- Operate the rear wiper

| Item No. | Item name | Normal condition |
|---|---|---|
| Item 9 | Rear wiper auto stop switch | ON |

*NOTE: Confirm that the M.U.T.-III displays from "ON" to "OFF" when rear wiper stops at the predetermined park position.*

**OK: Normal conditions is displayed for all the items.**

**Q: Is the check result normal?**
**YES :** The trouble can be an intermittent malfunction (Refer to GROUP 00 – How to Cope with Intermittent Malfunction P.00-5).
**NO :** Replace the ETACS-ECU.

Main Index
Group TOC

**INSPECTION PROCEDURE H-3: When the selector lever is moved to "R" position during the rear wiper operation, the rear wiper does not operate at the continuous mode.**

**⚠ CAUTION**
**Whenever the ECU is replaced, ensure that the input and output signal circuits are normal.**

**"R" Position During Wiper Operation Circuit <A/T>**

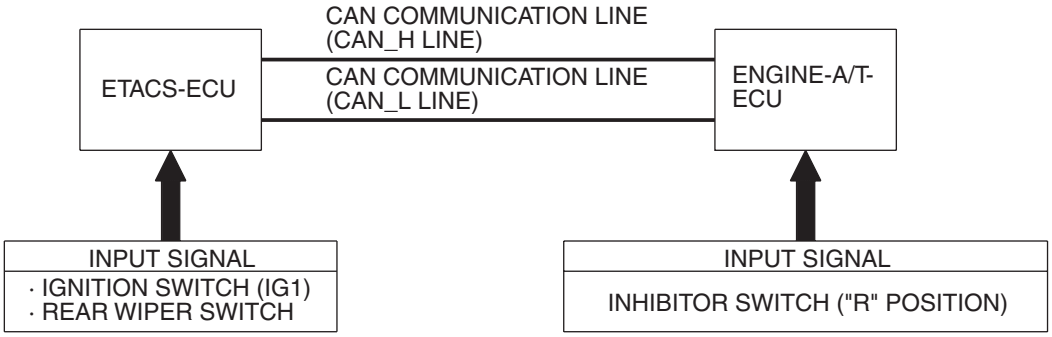


W4X54E176A

## COMMENTS ON TROUBLE SYMPTOM

If the rear wiper does not operate consecutively when the selector lever is moved to the R position during the rear wiper operation, the shift position input signal circuit or the ETACS-ECU may be defective.

## POSSIBLE CAUSES

- Malfunction of the engine-A/T-ECU
- Malfunction of the ETACS-ECU
- Damaged harness wires and connectors

## DIAGNOSIS PROCEDURE

**Step 1. Check the operation of the rear wiper.**
Check that the rear wiper system should work normally by operating the rear wiper switch.

**Q: Is the check result normal?**
**YES :** Go to Step 2.
**NO :** Refer to inspection procedure H-1 "The rear wiper does not work at all P.54E-165."

**Step 2. M.U.T.-III CAN bus diagnostics**
Use the M.U.T.-III to diagnose the CAN bus lines.

**Q: Is the check result normal?**
**YES :** Go to Step 3.
**NO :** Repair the CAN bus line (Refer to GROUP 54F, Diagnosis P.54F-13).

**Step 3. Pulse check.**
Check the input signal, which are related to the R (reverse) gear-linked rear wiper operation.

| System switch | Check condition |
|---|---|
| Inhibitor switch (reverse position) | When the ignition switch is turned ON and the selector lever is moved to the R position. |

**OK: The M.U.T.-III sounds or the voltmeter needle fluctuates.**

**Q: Is the check result normal?**
**YES :** Go to Step 4.
**NO :** Refer to diagnosis code No.11 inspection procedure "Engine-A/T-ECU time-out (related to engine) P.54E-33."

**Step 4. Retest the system.**
Check that the rear wiper operates consecutively when the selector lever is moved to the R position during the rear wiper operation.

**Q: Is the check result normal?**
**YES :** The trouble can be an intermittent malfunction (Refer to GROUP 00 – How to Cope with Intermittent Malfunction P.00-5).
**NO :** Replace the ETACS-ECU.

Main Index
Group TOC

## INSPECTION PROCEDURE H-4: The rear washer does not work.

**⚠ CAUTION**
**Whenever the ECU is replaced, ensure that the input and output signal circuits are normal.**

**Rear Washer Drive Circuit**

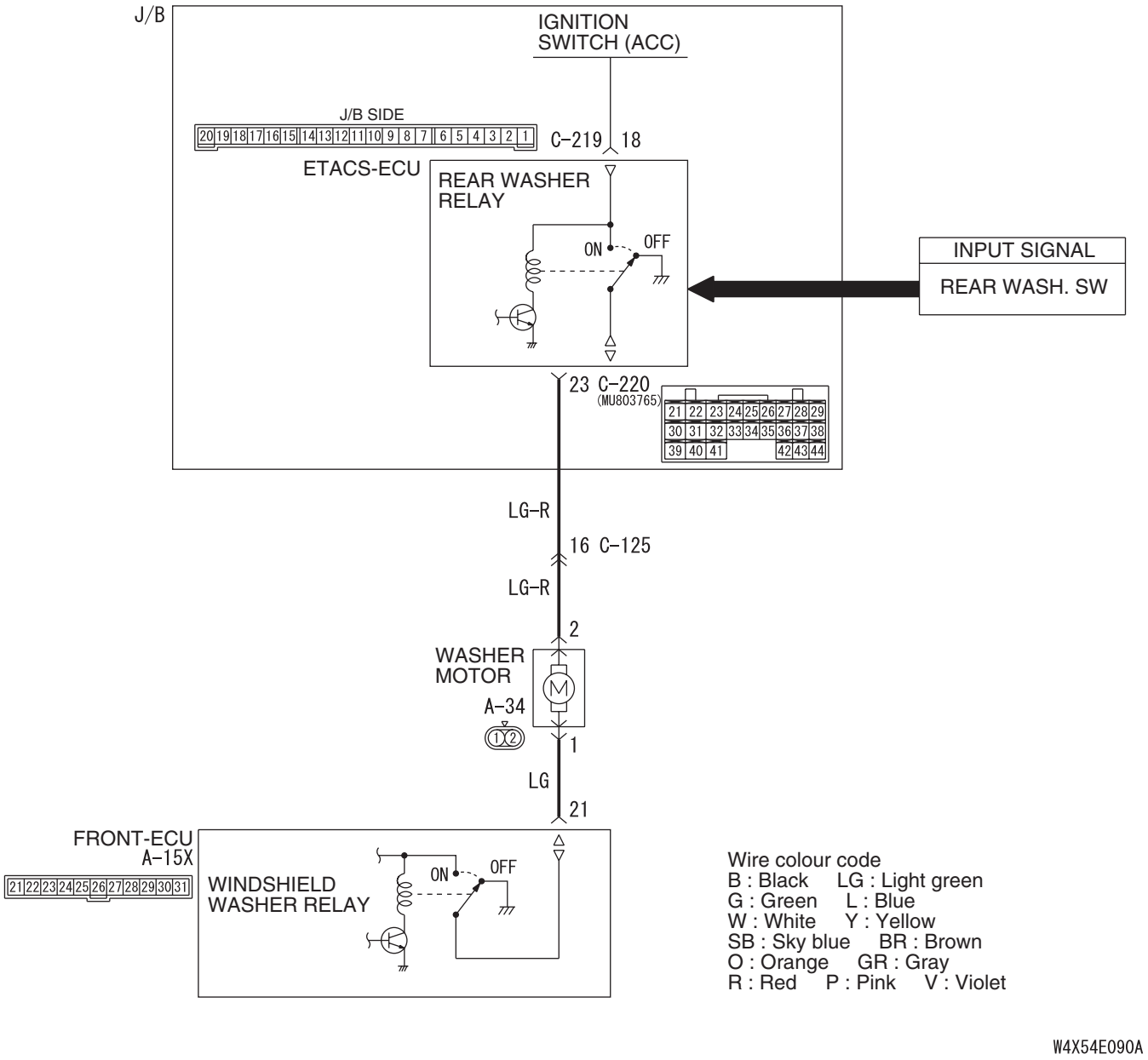


## COMMENTS ON TROUBLE SYMPTOM

If the rear washer does not work normally, the input signal circuits to the rear washer switch, rear washer motor, the column switch, the front-ECU or the ETACS-ECU may be defective.

## POSSIBLE CAUSES

- Malfunction of the washer motor
- Malfunction of the column switch
- Malfunction of the ETACS-ECU
- Malfunction of the front-ECU
- Damaged harness wires and connectors

Main Index
Group TOC

## DIAGNOSIS PROCEDURE

**Step 1. Confirm the operation of the rear wiper.**
Check that the rear wiper work normally.

**Q: Is the check result normal?**
**YES :** Go to Step 2.
**NO :** Refer to Inspection Procedure H-1 "The rear wiper does not work at all P.54E-165."

**Step 2. ECU check by using the SWS monitor.**
Check that the power supply and earth lines to the column switch (column-ECU), the ETACS-ECU and the front-ECU and the SWS communication lines are normal.
- Turn the ignition switch to the ACC position.

**ECUS TO BE CHECKED**
- Column ECU
- ETACS-ECU
- Front ECU

**OK: "OK" is displayed for all the items**

**Q: Are the check result normal?**
**"OK" is displayed for all the items :** Go to Step 3.
**"NG" is displayed on the "COLUMN ECU" menu. :** Refer to Inspection Procedure A-2 "Communication with the column switch (column-ECU) is not possible P.54E-51."
**"NG" is displayed on the "ETACS ECU" menu. :** Refer to Inspection Procedure A-3 "Communication with the ETACS-ECU is not possible P.54E-55."
**"NG" is displayed on the "FRONT ECU" menu. :** Refer to Inspection Procedure A-4 "Communication with the front-ECU is not possible P.54E-60."

**Step 3. Function diagnosis by using the SWS monitor**
Check the SWS communication signal, which are related to the rear washer function.

**<Selected item> REAR WIPER-REAR WASHER**
- Ignition switch: ACC
- Rear washer switch: ON

| Item No. | Item name | Normal condition |
|---|---|---|
| Item 14 | REAR WASH. SW | ON |

**OK: Normal condition is displayed.**

**Q: Is the check result normal?**
**YES :** Go to Step 4.
**NO :** Refer to inspection procedure P-6 "Column switch (windshield wiper/washer and rear wiper washer switch) signal is not received P.54E-302."

**Step 4. Connector check: A-34 washer motor connector.**

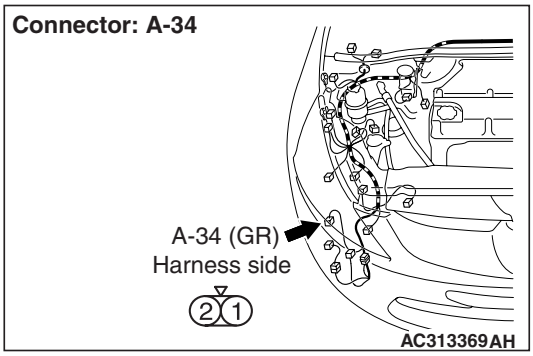


**Q: Is the check result normal?**
**YES :** Go to Step 5.
**NO :** Repair the connector.

**Step 5. Check the washer motor.**
Refer to GROUP 51 – Rear wiper and washer P.51-27.

**Q: Is the check result normal?**
**YES :** Go to Step 6.
**NO :** Replace the rear washer motor.

**Step 6. Connector check: A-15X front-ECU connector.**

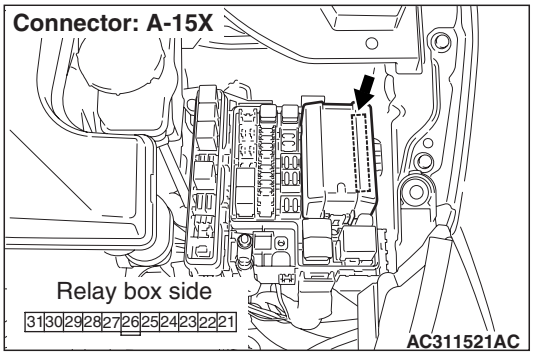


**Q: Is the check result normal?**
**YES :** Go to Step 7.
**NO :** Repair the connector.

**Step 7. Check the wiring harness between A-34 washer motor connector terminal No.1 to A-15X front ECU connector terminal No.21.**

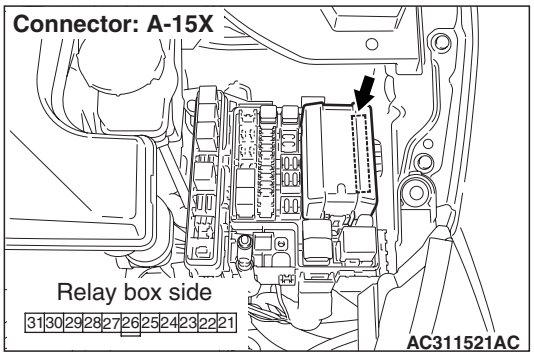


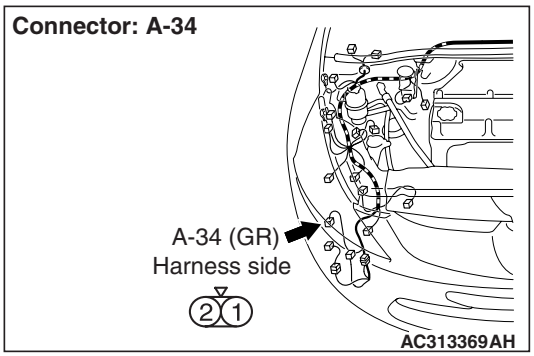


- Check the earth line for open or short circuit.

**Q: Is the check result normal?**
**YES :** Go to Step 8.
**NO :** Repair the wiring harness.

**Step 8. Connector check: C-220 ETACS-ECU connector.**

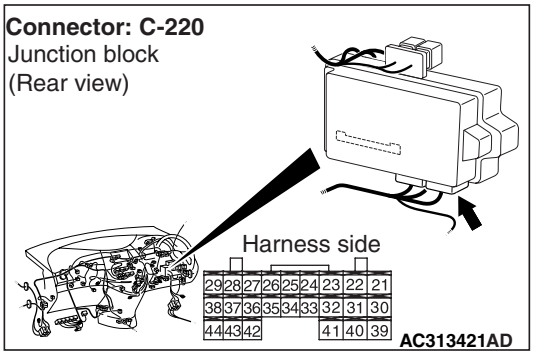


**Q: Is the check result normal?**
**YES :** Go to Step 9.
**NO :** Repair the connector.

**Step 9. Check the wiring harness between C-220 ETACS-ECU connector terminal No.23 to A-34 washer motor connector terminal No.2.**

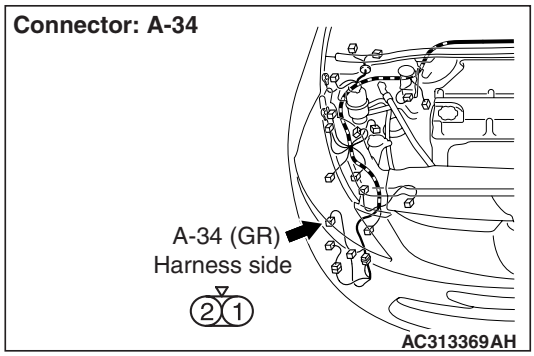


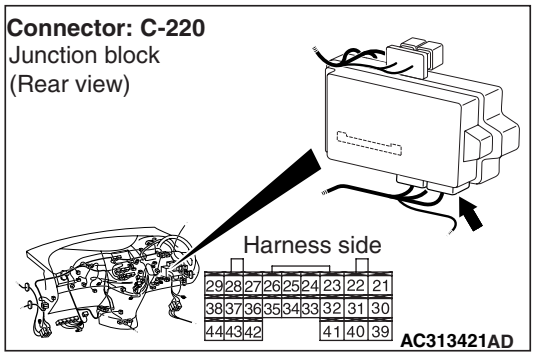


*NOTE:*

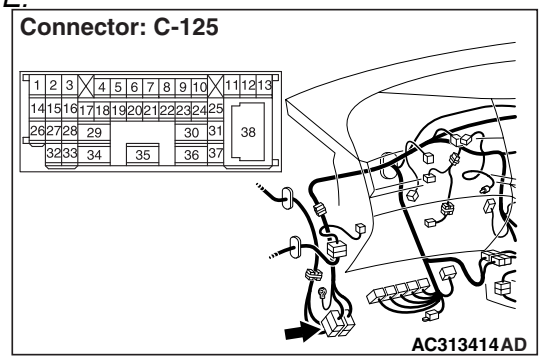


*Prior to the wiring harness inspection, check intermediate connector C-125, and repair if necessary.*

- Check the output signal line.

**Q: Is the check result normal?**
**YES :** Go to Step 10.
**NO :** Repair the wiring harness.

Main Index
Group TOC

**Step 10. Replace the ETACS-ECU, and then check its operation.**

Replace the ETACS-ECU, and then check that the rear washer works normally.

(1) Replace the ETACS-ECU.
(2) Ignition switch: ON
(3) The rear washer should now work normally.

**Q: Is the check result satisfactory?**

**YES : .** The trouble can be an intermittent malfunction (Refer to GROUP 00 – How to Cope with Intermittent Malfunction P.00-5).

**NO : .** Replace the front-ECU.

Main Index
Group TOC

# ELECTRIC RETRACTABLE REMOTE CONTROLLED DOOR MIRROR

## INSPECTION PROCEDURE I-1: Electric retractable remote controlled door mirror does not work at all.

**⚠ CAUTION**

**Whenever the ECU is replaced, ensure that the input and output signal circuits are normal.**

**Door Mirror Relay Circuit**

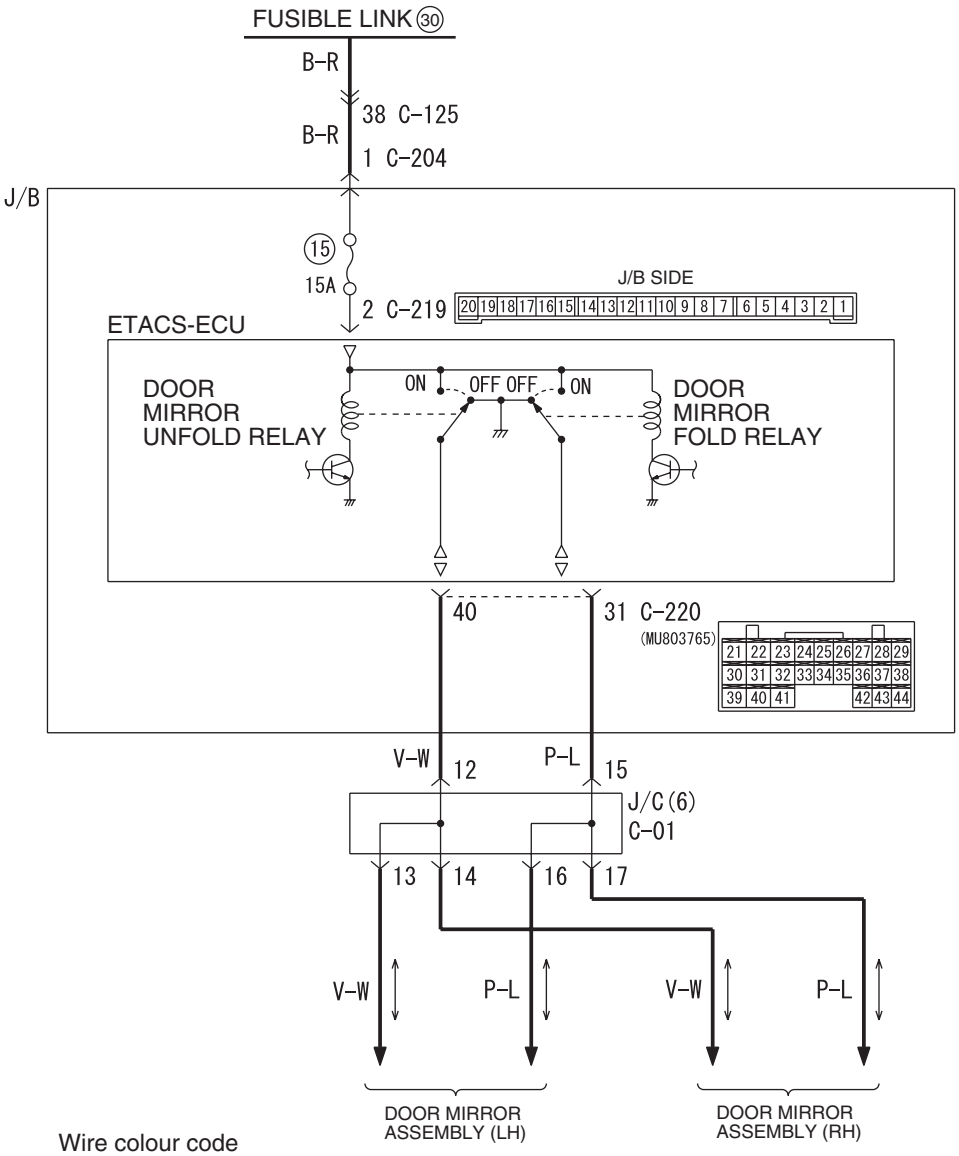


Wire colour code
B : Black LG : Light green G : Green L : Blue W : White Y : Yellow SB : Sky blue
BR : Brown O : Orange GR : Grey R : Red P : Pink V : Violet PU : Purple

W6X54X061A

Main Index
Group TOC

## COMMENTS ON TROUBLE SYMPTOM

If the electric retractable remote controlled door mirror does not work at all, these power supply circuit(s), these earth circuit(s), remote controlled mirror switch or ETACS-ECU may be defective.

## POSSIBLE CAUSES

- Malfunction of the remote controlled mirror switch
- Malfunction of ETACS-ECU
- Damaged harness wires and connectors

## DIAGNOSTIC PROCEDURE

### Step 1. ECU check on the SWS monitor.

Check that the power supply and earth lines to the ETACS-ECU and the SWS communication lines are normal.

- Ignition switch: ACC

**ECU TO BE CHECKED**

- ETACS ECU

**OK: "OK" is displayed on the "ETACS ECU" menu.**

**Q: Is the check result normal?**

**YES :** Go to Step 2.

**NO :** Refer to Inspection Procedure A-3 "Communication with the ETACS-ECU is not possible P.54E-55."

### Step 2. SWS monitor data list.

Check the SWS communication signal, which are related to the electric retractable remote controlled mirror.

**<Selected item> ETACS ECU**

- Ignition switch: ACC

| Item No. | Item name | Normal conditions |
|---|---|---|
| Item 31 | IG SW (ACC) | ON |

**OK: Normal condition is displayed.**

**Q: Is the check result normal?**

**YES :** Go to Step 3.

**NO :** Refer to inspection procedure P-1 "The ignition switch (ACC) signal is not received P.54E-291."

### Step 3. ETACS switch data by using the SWS monitor

Check the ETACS-ECU signal, which is related to the electric retractable remote controlled mirror.

- Remote controlled mirror switch (folding/unfolding switch): ON

| Item No. | Item name | Normal conditions |
|---|---|---|
| Item 14 | Retractable mirror switch | ON |

**OK: Normal condition is displayed**

**Q: Is the check result normal?**

**YES :** Go to Step 4.

**NO :** Refer to inspection procedure P-16 "Signal is not received from the remote controlled mirror switch (folding/unfolding switch) P.54E-329."

### Step 4. Connector check: C-219 ETACS-ECU connector.

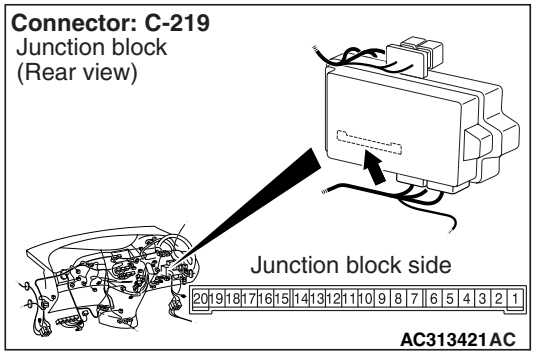


**Q: Is the check result normal?**

**YES :** Go to Step 5.

**NO :** Repair the connector.

**Step 5. Voltage measurement at the C-219 ETACS-ECU connector.**

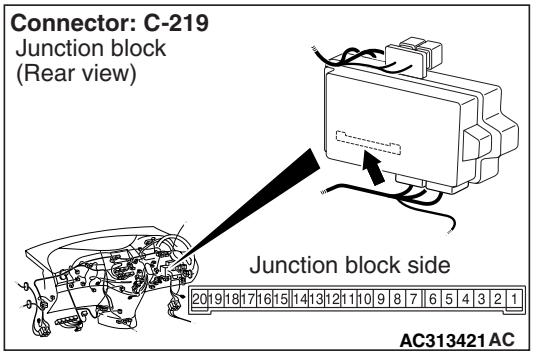


(1) Remove the ETACS-ECU, and measure at the junction block side.

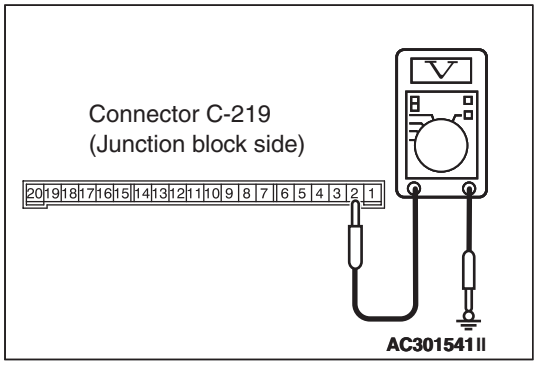


(2) Check the voltage between the C-219 ETACS-ECU connector terminal No.2 and body earth.

**OK: System voltage**

**Q: Is the check result normal?**

**YES :** Go to Step 7.

**NO :** Go to Step 6.

**Step 6. Check the wiring harness between C-219 ETACS-ECU connector terminal No.2 to the fusible link (30).**

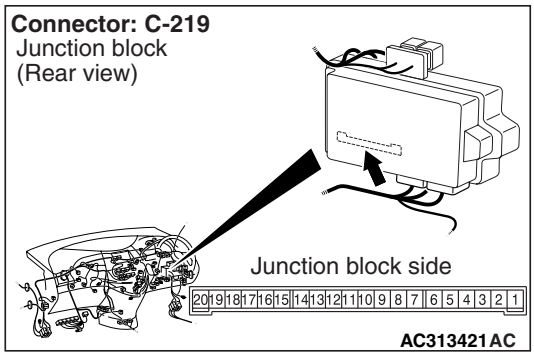


*NOTE:*

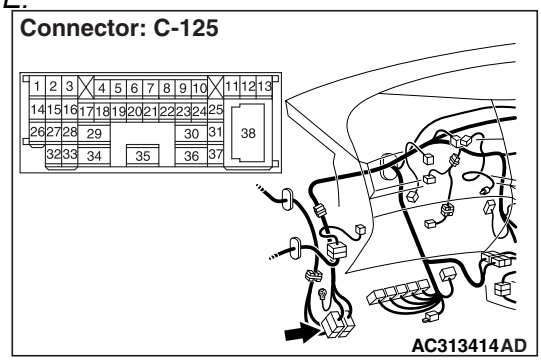


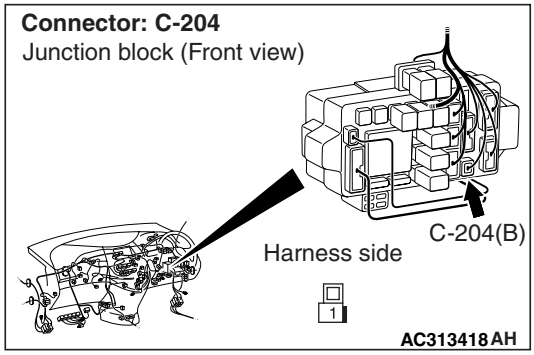


*Prior to the wiring harness inspection, check intermediate connectors C-125 and junction block connector C-204, and repair if necessary.*

- Check the power supply line to the battery for open circuit.

**Q: Is the check result normal?**

**YES :** The trouble can be an intermittent malfunction (Refer to GROUP 00 – How to Cope with Intermittent Malfunction P.00-5).

**NO :** Repair the wiring harness.

Main Index
Group TOC

**Step 7. Retest the system.**

Check that the electric retractable remote controlled mirror works normally.

**Q: Is the check result normal?**

**YES :** The trouble can be an intermittent malfunction (Refer to GROUP 00 – How to Cope with Intermittent Malfunction P.00-5).

**NO :** Replace the ETACS-ECU.

Main Index
Group TOC

## INSPECTION PROCEDURE I-2: Left or right side electric retractable remote controlled door mirror does not work at all.

**⚠ CAUTION**
**Whenever the ECU is replaced, ensure that the input and output signal circuits are normal.**

**Electric Retractable Remote Controlled Mirror Circuit**

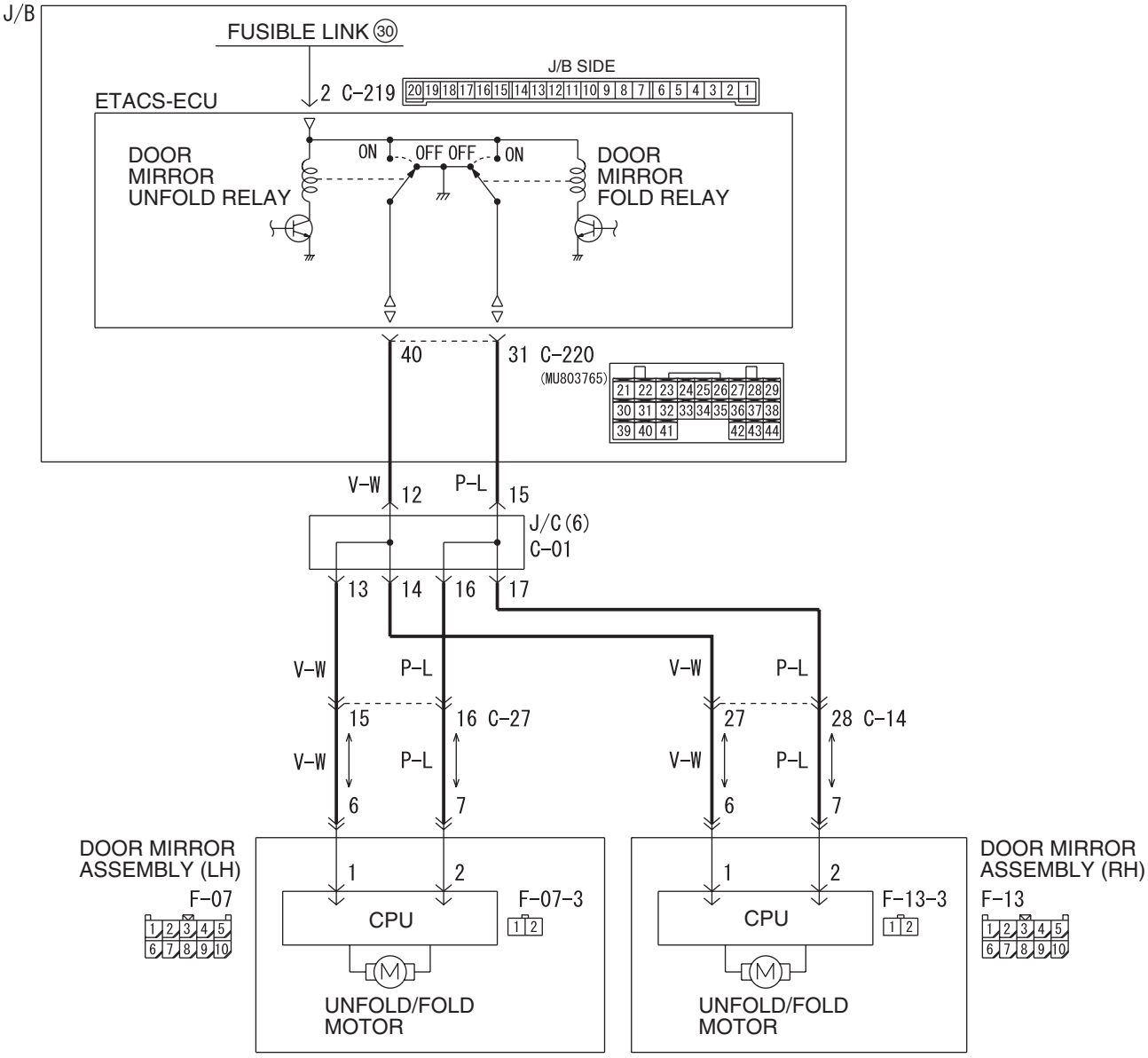


Wire colour code
B : Black LG : Light green G : Green L : Blue W : White Y : Yellow SB : Sky blue
BR : Brown O : Orange GR : Grey R : Red P : Pink V : Violet PU : Purple

W6X54X062A

## COMMENTS ON TROUBLE SYMPTOM

If left or right side electric retractable remote controlled door mirror does not work at all, electric retractable remote controlled door mirror may be defective.

## POSSIBLE CAUSES

- Malfunction of the door mirror assembly
- Malfunction of the retractor motor
- Damaged harness wires and connectors

Main Index
Group TOC

## DIAGNOSTIC PROCEDURE

**Step 1. Confirm which door mirror is defective.**

**Q: Confirm which door mirror is defective.**
**LH :** Go to Step 2.
**RH :** Go to Step 9.

**Step 2. Connectors check: F-07 door mirror assembly (LH) connectors.**

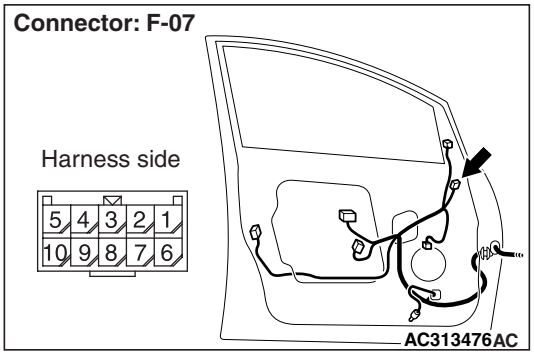


**Q: Is the check result normal?**
**YES :** Go to Step 3.
**NO :** Repair the connector.

**Step 3. Check the door mirror assembly (LH).**
Check that the electric folding outside rear-view mirror (LH) works normally. Refer to GROUP 51 – Door mirror P.51-38.

**Q: Is the check result normal?**
**YES :** Go to Step 7.
**NO :** Go to Step 4.

**Step 4. Connectors check: F-07-3 retractors motor (LH) connectors.**

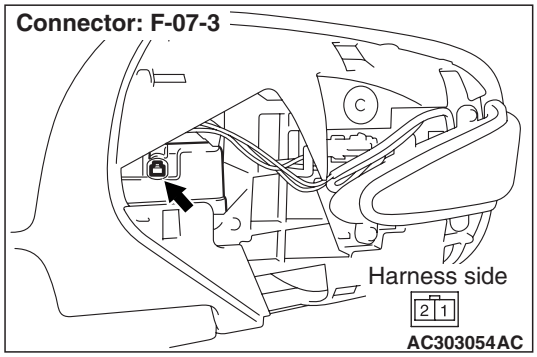


**Q: Is the check result normal?**
**YES :** Go to Step 5.
**NO :** Repair the connector.

**Step 5. Check the retractor motor (LH).**
Check that the electric folding outside rear-view mirror (LH) works normally. Refer to GROUP 51 – Door mirror P.51-38.

**Q: Is the check result normal?**
**YES :** Go to Step 6.
**NO :** Replace the retractors motor (LH).

**Step 6. Check the wiring harness between F-07-3 retractor motor (LH) connector terminal Nos. 1 and 2 to F-07 door mirror assembly (LH) connector terminal Nos. 6 and 7.**

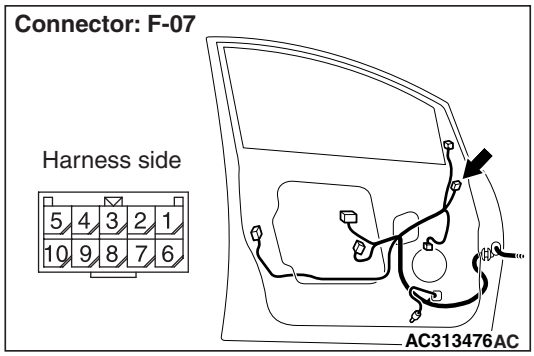


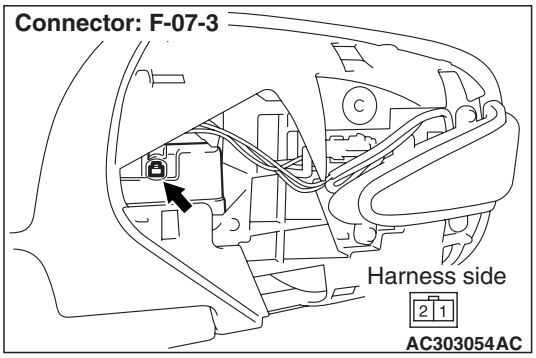


- Check the input and output signal line for open circuit.

**Q: Is the check result normal?**
**YES :** Replace the door mirror assembly (LH).
**NO :** Repair the wiring harness.

## Step 7. Connector check: C-220 ETACS-ECU connector.

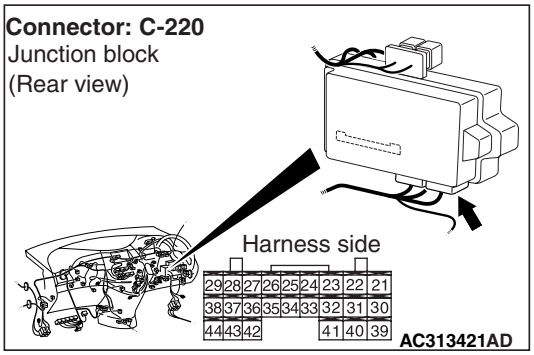


**Q: Is the check result normal?**
**YES :** Go to Step 8.
**NO :** Repair the connector.

## Step 8. Check the wiring harness between C-220 ETACS-ECU connector terminal Nos. 31 to 40 to F-07 door mirror assembly (LH) connector terminal Nos. 7 to 6.

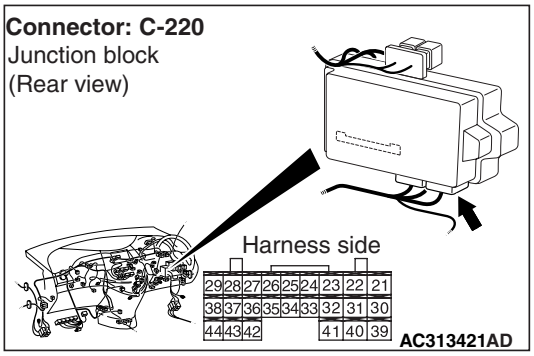


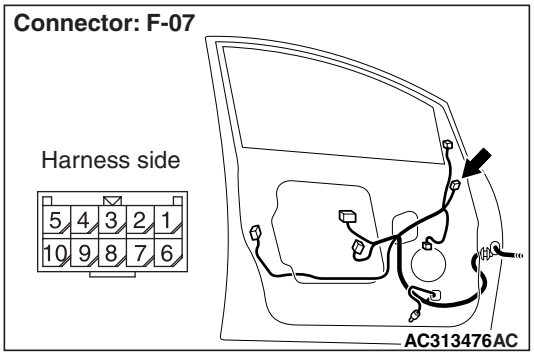


*NOTE:*

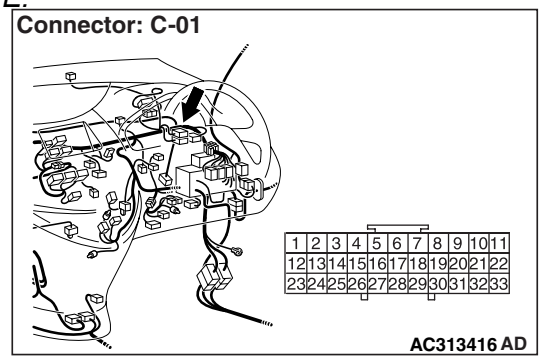


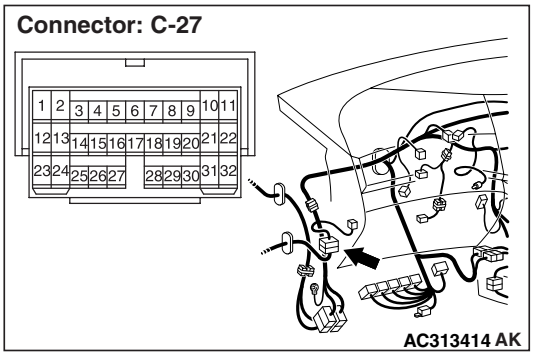


*Prior to the wiring harness inspection, check intermediate connector C-27 and joint connector C-01, and repair if necessary.*

- Check the input and output signal line for open circuit.

**Q: Is the check result normal?**
**YES :** Go to Step 16.
**NO :** Repair the wiring harness.

## Step 9. Connectors check: F-13 door mirror assembly (RH) connectors.

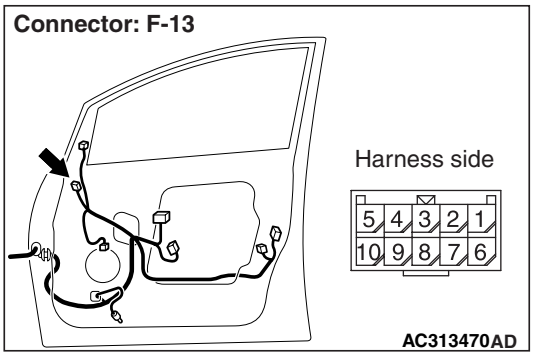


**Q: Is the check result normal?**
**YES :** Go to Step 10.
**NO :** Repair the connector.

Main Index
Group TOC

**Step 10. Check the door mirror assembly (RH).**
Check that the electric folding outside rear-view mirror (RH) works normally. Refer to GROUP 51 – Door mirror P.51-38.

**Q: Is the check result normal?**
**YES :** Go to Step 14.
**NO :** Go to Step 11.

**Step 11. Connectors check: F-13-3 retractors motor (RH) connectors.**

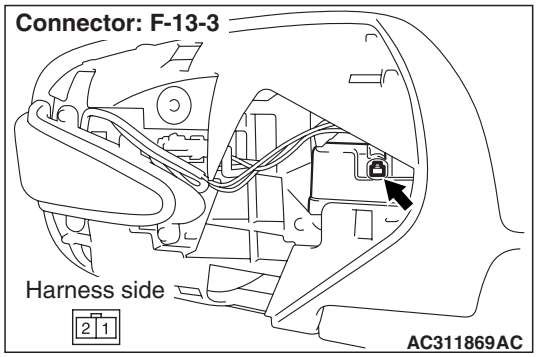


**Q: Is the check result normal?**
**YES :** Go to Step 12.
**NO :** Repair the connector.

**Step 12. Check the retractor motor (RH).**
Check that the electric folding outside rear-view mirror (RH) works normally. Refer to GROUP 51 – Door mirror P.51-38.

**Q: Is the check result normal?**
**YES :** Go to Step 13.
**NO :** Replace the retractors motor (RH).

**Step 13. Check the wiring harness between F-13-3 retractor motor (RH) connector terminal Nos. 1 and 2 to F-13 door mirror assembly (RH) connector terminal Nos. 7 to 6.**

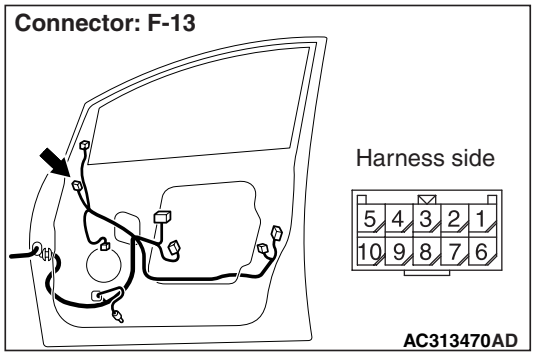


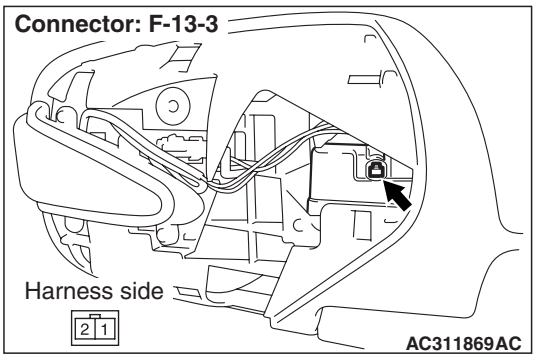


- Check the input and output signal line for open circuit.

**Q: Is the check result normal?**
**YES :** Replace the door mirror assembly (RH).
**NO :** Repair the wiring harness.

**Step 14. Connector check: C-220 ETACS-ECU connector.**

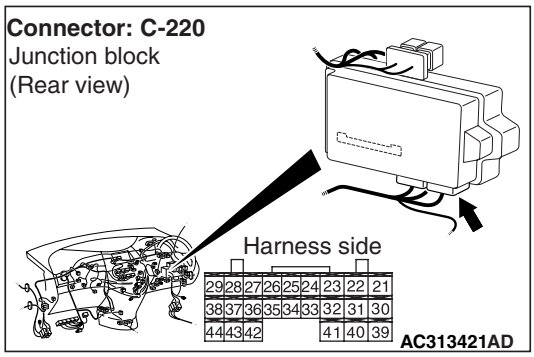


**Q: Is the check result normal?**
**YES :** Go to Step 15.
**NO :** Repair the connector.

Main Index
Group TOC

**Step 15. Check the wiring harness between C-220 ETACS-ECU connector terminal Nos. 31 and 40 to E-13 door mirror assembly (RH) connector terminal Nos. 7 and 6.**

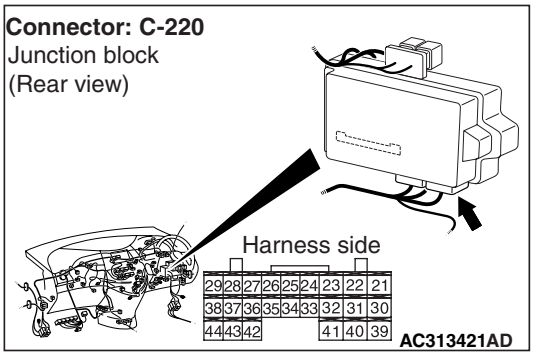


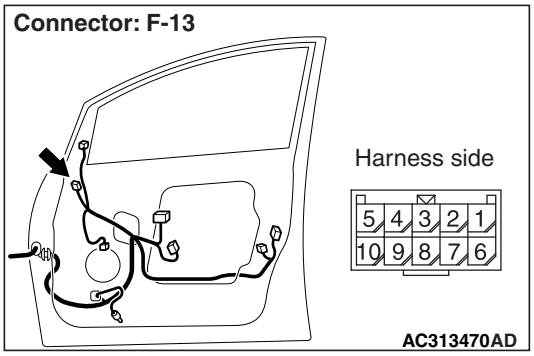


*NOTE:*

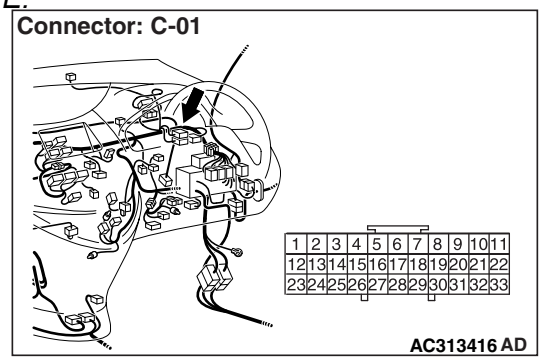


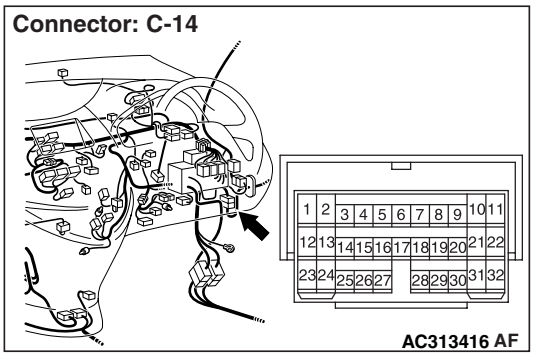


*Prior to the wiring harness inspection, check intermediate connector C-14 and joint connector C-01, and repair if necessary.*

- Check the input and output signal line for open circuit.

**Q: Is the check result normal?**
**YES :** Go to Step 16.
**NO :** Repair the wiring harness.

**Step16. Retest the system.**

Check that the electric retractable remote controlled mirror works normally.

**Q: Is the check result normal?**
**YES :** The trouble can be an intermittent malfunction (Refer to GROUP 00 – How to Cope with Intermittent Malfunction P.00-5).
**NO :** Replace the ETACS-ECU.

Main Index
Group TOC

**INSPECTION PROCEDURE I-3: Electric retractable remote controlled door mirror timer function does not at all.**

**⚠ CAUTION**
**Whenever the ECU is replaced, ensure that the input and output signal circuits are normal.**

## COMMENTS ON TROUBLE SYMPTOM

If the door mirror can be folded and unfolded with the remote controlled mirror switch (fold/unfold switch), the ETACS-ECU may be defective.

## POSSIBLE CAUSES

- Malfunction of the ETACS-ECU
- Damaged harness wires and connectors

## DIAGNOSTIC PROCEDURE

**Step 1. Check the electric retactable door mirrors operation.**
Check that the door mirror is folded and unfolded with the remote controlled mirror switch when the ignition switch is at ACC position.

**Q: Is the check result normal?**
**YES :** Go to Step 2.
**NO :** Refer to inspection procedure I-1 "Electric retractable remote controlled door mirror does not work at all IP.54E-177."

**Step 2. ECU check on the SWS monitor.**
Check that the power supply and earth lines to the ETACS-ECU and the SWS communication lines are normal.
- Ignition switch: OFF

**ECU TO BE CHECKED**
- ETACS ECU

**OK: "OK" is displayed on the "ETACS ECU" menu.**

**Q: Is the check result normal?**
**YES :** Go to Step 3.
**NO :** Refer to Inspection Procedure A-3 "Communication with the ETACS-ECU is not possible P.54E-55."

**Step 3. SWS monitor data list.**
Check the SWS communication signal, which are related to the electric retractable door mirror timer function.

**<Selected item> ETACS ECU**
- Ignition switch: IG1

| Item No. | Item name | Normal condition |
|---|---|---|
| Item 30 | IG SW (IG1) | ON |

**OK: Normal condition is displayed.**

**Q: Are the check result normal?**
**YES :** Go to Step 4.
**NO :** Refer to inspection procedure P-2 "The ignition switch (IG1) signal is not received P.54E-293."

**Step 4. Retest the system.**
Check that the electric retractable door mirror timer function works normally.

**Q: Is the check result normal?**
**YES :** The trouble can be an intermittent malfunction (Refer to GROUP 00 – How to Cope with Intermittent Malfunction P.00-5).
**NO :** Replace the ETACS-ECU.

Main Index
Group TOC

## INSPECTION PROCEDURE I-4: Vehicle speed-dependent unfolding function does not work normally.

**⚠ CAUTION**
**Whenever the ECU is replaced, ensure that the input and output signal circuits are normal.**

## COMMENTS ON TROUBLE SYMPTOM

If this function does not work normally, the input signal circuit(s) below or the ETACS-ECU may be defective. Also, with a customisation function, the door mirrors may be set to a mode in which the vehicle speed-dependent unfolding function is not activated.

- Ignition switch (IG1)
- Vehicle speed signal (combination meter)

## POSSIBLE CAUSES

- Defective vehicle speed signal (combination meter)
- The CAN bus line is defective.
- Malfunction of the ETACS-ECU
- Damaged harness wires and connectors

## DIAGNOSIS PROCEDURE

### Step 1. Customize function by using the SWS monitor

Use the SWS monitor customisation function to confirm that "Door mirror function adjustment" is set to "Speed sensitive".

**Q: Is the check result normal?**
**YES :** Go to Step 2.
**NO :** Use the SWS monitor customisation function to set "Door mirror function adjustment" to "Speed sensitive" (Refer to P.54E-353).

### Step 2. M.U.T.-III CAN bus diagnostics

Use the M.U.T.-III to diagnose the CAN bus lines.

**Q: Is the check result normal?**
**YES :** Go to Step 3.
**NO :** Repair the CAN bus line (Refer to GROUP 54F, Diagnosis P.54F-13).

### Step 3. ECU check by using the SWS monitor

Check that the power supply and earth lines to the ETACS-ECU and the SWS communication lines are normal.

- Ignition switch: ON

**ECU TO BE CHECKED**

- ETACS

**OK: "OK" is displayed on the "ETACS ECU" menu.**

**Q: Is the check result normal?**
**YES :** Go to Step 4.
**NO :** Refer to Inspection Procedure A-3 "Communication with the ETACS-ECU is not possible P.54E-55."

### Step 4. SWS monitor data list.

Check the SWS communication signal, which are related to the vehicle speed-dependent unfolding function.

**<Selected item> ETACS ECU**

- Ignition switch: ON

| Item No. | Item name | Normal conditions |
|---|---|---|
| Item 30 | IG SW(IG1) | ON |

**OK: Normal condition is displayed.**

**Q: Is the check result normal?**
**YES :** Go to Step 5.
**NO :** Refer to inspection procedure P-2 "The ignition switch (IG1) signal is not received P.54E-293."

### Step 5. ETACS ANALOG data by using the SWS monitor.

Check the ETACS-ECU input signals related to the vehicle speed-dependent unfolding function.

- Set the simulated vehicle speed at approximately 10km/h.

| Item No. | Item name | Normal condition |
|---|---|---|
| Item 03 | Vehicle speed | 8 to 10 km/h |

**OK: Normal condition is displayed.**

**Q: Is the check result normal?**
**YES :** Go to Step 6.
**NO :** Refer to inspection procedure P-21 "The vehicle speed signal is not received P.54E-343."

Main Index
Group TOC

**Step 6. Retest the system.**
Check that the vehicle speed-dependent unfolding function of the door mirrors works normally.

**Q: Is the check result normal?**
**YES :** The trouble can be an intermittent malfunction (Refer to GROUP 00 – How to Cope with Intermittent Malfunction P.00-5).
**NO :** Replace the ETACS-ECU.

## INSPECTION PROCEDURE I-5: Ignition-linked fold/unfold function does not work normally.

**⚠ CAUTION**
**Whenever the ECU is replaced, ensure that the input and output signal circuits are normal.**

### COMMENTS ON TROUBLE SYMPTOM

If this function does not work normally, the input signal circuit(s) below or the ETACS-ECU may be defective. Also, with the customisation function, the door mirrors may be set to a mode in which the ignition interlock fold/unfold function is not activated.

- Ignition switch (IG1)
- Door switch (Front; RH)

### POSSIBLE CAUSES

- Malfunction of the driver's door switch
- Malfunction of the ETACS-ECU
- Damaged harness wires and connectors

### DIAGNOSIS PROCEDURE

**Step 1. Customize function by using the SWS monitor**
Use the SWS monitor customisation function to confirm that "Door mirror function adjustment" is set to "IG link(CU0)".

**Q: Is the check result normal?**
**YES :** Go to Step 2.
**NO :** Use the SWS monitor customisation function to set "Door mirror function adjustment" to "IG link(CU0)" (Refer to P.54E-353.)

**Step 2. SWS monitor data list.**
Check the SWS communication signals, which are related to the ignition-dependant/unfolding function.

**<Selected item> ETACS ECU**
- Driver's door: open
- Turn the ignition switch to the ON position.

| Item No. | Item name | Normal conditions |
|---|---|---|
| Item 30 | IG SW(IG1) | ON |
| Item 32 | DR DOOR SW | ON |

**OK: Normal conditions are displayed for all the items.**

**Q: Is the check result normal?**
**Normal conditions are displayed for all the items :** Go to Step 3.
**Normal condition is not displayed for item No.30 :** Refer to inspection procedure P-2 "The ignition switch (IG1) signal is not received P.54E-293."
**Normal condition is not displayed for item No.32 :** Refer to inspection procedure P-4 "The driver's door switch signal is not received P.54E-298."

**Step 3. Retest the system.**
Check that the ignition interlock fold/unfold function for the door mirrors works normally.

**Q: Is the check result normal?**
**YES :** The trouble can be an intermittent malfunction (Refer to GROUP 00 – How to Cope with Intermittent Malfunction P.00-5).
**NO :** Replace the ETACS-ECU.

Main Index
Group TOC

**INSPECTION PROCEDURE I-6: Keyless entry system-linked fold/unfold function does not work normally.**

**⚠ CAUTION**
**Whenever the ECU is replaced, ensure that the input and output signal circuits are normal.**

## COMMENTS ON TROUBLE SYMPTOM

If this function does not work normally, keyless entry transmitter input signal circuit or the ETACS-ECU may be defective. Also, with the customisation function, the door mirrors may be set other than to the keyless entry interlock fold/unfold function.

## PROBABLE CAUSES

- Defective keyless entry transmitter
- Malfunction of the ETACS-ECU
- Damaged harness wires and connectors

## DIAGNOSIS PROCEDURE

**Step 1. Customize function by using the SWS monitor**
Use the SWS monitor customisation function to confirm that "Door mirror function adjustment" is set to "Keyless link".

**Q: Is the check result normal?**
**YES :** Go to Step 2.
**NO :** Use the SWS monitor customisation function to set "Door mirror function adjustment" to "Keyless link" (Refer to P.54E-353).

**Step 2. Check the keyless entry operation.**
Check that the keyless entry system works normally.

**Q: Is the check result normal?**
**YES :** Go to Step 3.
**NO :** Refer to inspection procedure E-1 "Keyless entry system does not work P.54E-132."

**Step 3. Retest the system.**
Check that the keyless entry interlock fold/unfold function for the door mirrors works normally.

**Q: Is the check result normal?**
**YES :** The trouble can be an intermittent malfunction (Refer to GROUP 00 – How to Cope with Intermittent Malfunction P.00-5).
**NO :** Replace the ETACS-ECU.

Main Index
Group TOC

# IGNITION KEY CYLINDER ILLUMINATION LAMP

**INSPECTION PROCEDURE J-1: The ignition key cylinder illumination lamp does not illuminate/extinguish normally.**

**⚠ CAUTION**
**Whenever the ECU is replaced, ensure that the input and output signal circuits are normal.**

**Ignition Key Cylinder Illumination Lamp Circuit**

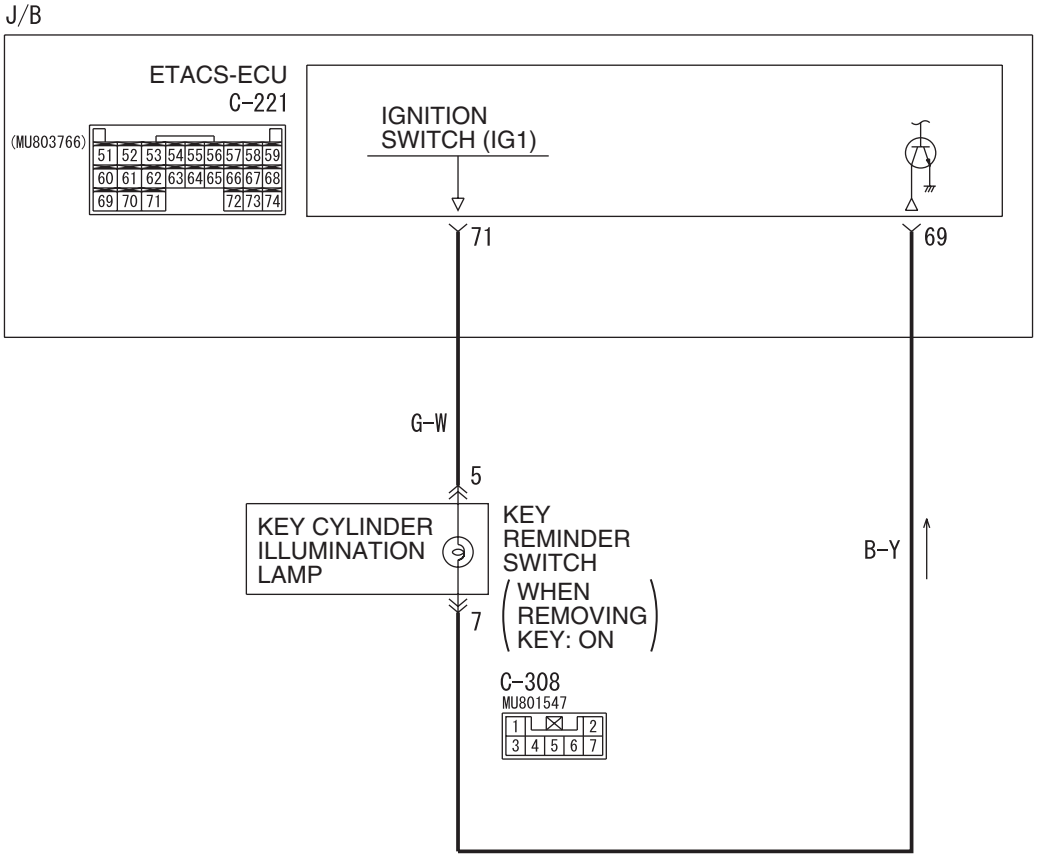


Wire colour code
B : Black LG : Light green G : Green L : Blue W : White Y : Yellow SB : Sky blue
BR : Brown O : Orange GR : Grey R : Red P : Pink V : Violet PU : Purple

W6X54X056A

## COMMENTS ON TROUBLE SYMPTOM

The ETACS-ECU operates this function in accordance with the input signals below.

- Ignition switch (IG1)
- Key reminder switch
- Driver's door switch
- Interior lamp loaded signal

If this function does not work normally, these input signal circuit(s), the ignition key cylinder illumination lamp or the ETACS-ECU may be defective.

## POSSIBLE CAUSES

- Malfunction of the key reminder switch
- Malfunction of the driver's door switch
- Malfunction of the ignition key cylinder illumination lamp bulb
- Malfunction of the ETACS-ECU
- Damaged harness wires and connectors

Main Index
Group TOC

## DIAGNOSIS PROCEDURE

**Step 1. Check the operation of the interior lamp.**
Check that the interior lamps illuminate and extinguish normally.

**Q: Is the check result normal?**
**YES :** Go to Step 2.
**NO :** Refer to inspection procedure N-1 "The interior lamps (room ramp, rear personal lamps, door lamps, luggage compartment lamp, key cylinder illumination lamp) do not illuminate or extinguish normally P.54E-248."

**Step 2. ETACS switch data by using the SWS monitor**
Check the ETACS-ECU signals related to the ignition key cylinder illumination lamp.
- Ignition switch: OFF (key inserted)

| Item No. | Item name | Normal condition |
|---|---|---|
| Item 3 | Key reminder switch | OFF |

**OK: Normal condition is displayed.**

**Q: Is the check result normal?**
**YES :** Go to Step 3.
**NO :** Refer to inspection procedure P-10 "The key reminder switch signal is not received P.54E-310."

**Step 3. Connector check: C-308 key reminder switch connector.**

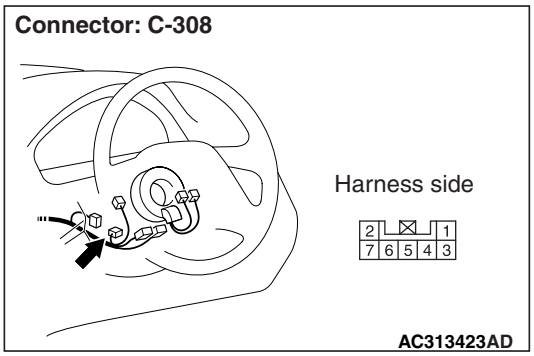


**Q: Is the check result normal?**
**YES : .** Go to Step 4.
**NO : .** Repair the defective connector.

**Step 4. Check the bulb of the ignition key cylinder illumination lamp.**
Check the bulb of the ignition key cylinder illumination lamp.

**Q: Is the check result normal?**
**YES :** Go to Step 5.
**NO :** Replace the bulb of the ignition key cylinder illumination lamp.

**Step 5. Connector check: C-221 ETACS-ECU connector.**

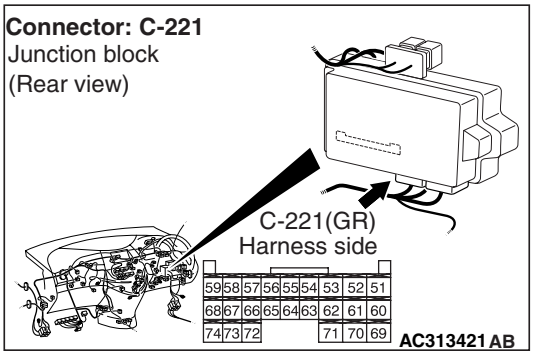


**Q: Is the check result normal?**
**YES :** Go to Step 6.
**NO :** Repair the defective connector.

Main Index
Group TOC

**Step 6. Check the wiring harness from C-221 ETACS-ECU connector terminal Nos. 69 and 71 to C-308 key cylinder illumination lamp connector terminal Nos. 1 and 2.**

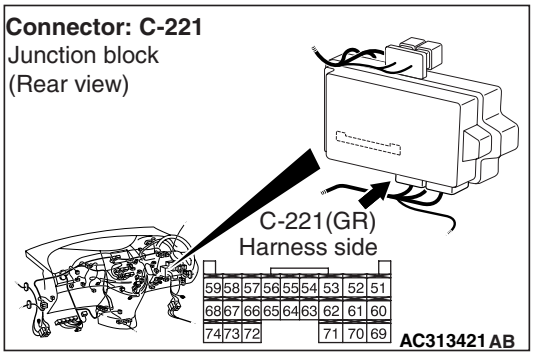


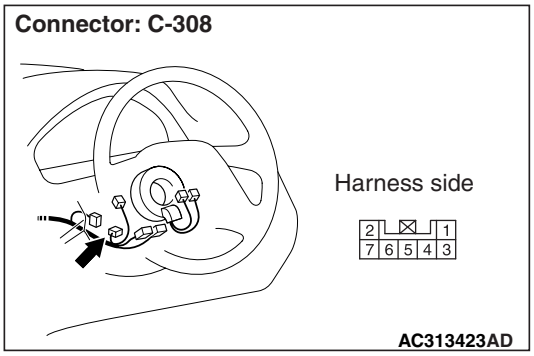


- Check the input and output lines for open circuit.

**Q: Is the check result normal?**
**YES :** Go to Step 7.
**NO :** Repair the wiring harness.

**Step 7. Retest the system.**
Check that the ignition key cylinder illumination lamp illuminates/extinguishes normally.

**Q: Is the check result normal?**
**YES :** The trouble can be an intermittent malfunction (Refer to GROUP 00 – How to Cope with Intermittent Malfunction P.00-5).
**NO :** Replace the ETACS-ECU.

Main Index
Group TOC

# HEADLAMP AND TAIL LAMP

## INSPECTION PROCEDURE K-1: The tail/stop lamps do not illuminate normally.

**⚠ CAUTION**
**Whenever the ECU is replaced, ensure that the input and output signal circuits are normal.**

**Tail Lamp Relay Circuit**

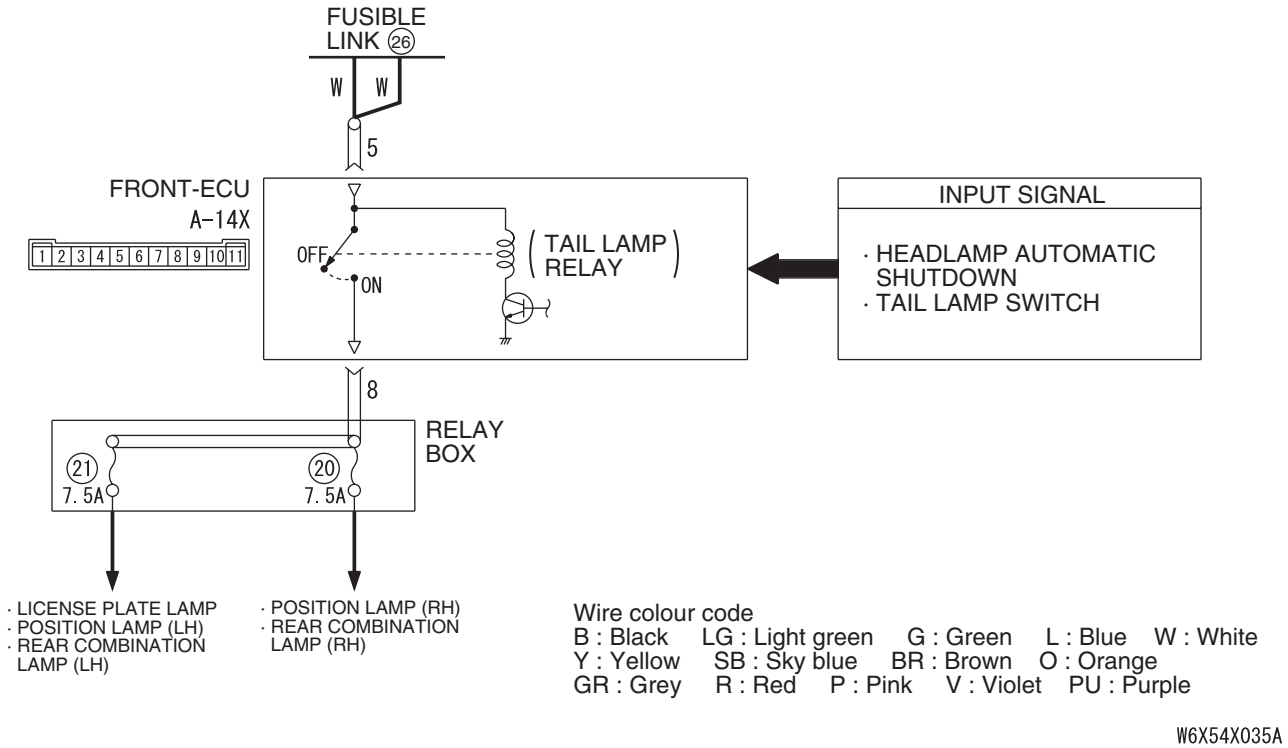


## COMMENTS ON TROUBLE SYMPTOM

If all the tail/stop lamps do not illuminate, the tail lamp switch input circuit or the front-ECU may be defective.

## POSSIBLE CAUSES

- Malfunction of the column switch
- Malfunction of the front-ECU
- Damaged harness wires and connectors

## DIAGNOSIS PROCEDURE

**Step 1. ECU check by using the SWS monitor.**
Check that the power supply and earth lines to the column switch (column-ECU) and the front-ECU and the SWS communication lines are normal.

- Ignition switch: OFF

**ECUS TO BE CHECKED**

- COLUMN ECU
- FRONT ECU

**OK: "OK" is displayed for all the items**

Main Index
Group TOC

**Q: Is the check result normal?**

**"OK" is displayed for all the items :** Go to Step 2.

**"NG" is displayed on the "COLUMN ECU" menu. :** Refer to Inspection Procedure A-2 "Communication with the column switch (column-ECU) is not possible P.54E-51."

**"NG" is displayed on the "FRONT ECU" menu. :** Refer to Inspection Procedure A-4 "Communication with the front-ECU is not possible P.54E-60."

### Step 2. Function diagnosis by using the SWS monitor.

Check the SWS communication signal, which are related to the tail lamps.

**<Selected item> LIGHTING - TAIL LAMP**

- Ignition switch: ON
- Lighting switch: TAIL

| Item No. | Item name | Normal condition |
|---|---|---|
| Item 00 | HEADLAMP SW | ON when the lighting switch is at HEAD |
| Item 01 | TAIL LAMP SW | ON when the lighting switch is at TAIL |
| Item 03 | PASSING SW | OFF |
| Item 30 | IG SW(IG1) | ON |
| Item 35 | HD AUTO-CUT | OFF |
| Item 70 | FRONT ECU ACK | NORMAL ACK |

**OK: Normal conditions are displayed for all the items**

**Q: Is the check result normal?**

**Normal conditions are displayed for all the items. :** Go to Step 3.

**Normal condition is not displayed for item 00, 01 or 03. :** Refer to inspection procedure P-5 "Column switch (lighting and turn-signal lamp switch) signal is not received P.54E-300."

**Normal condition is not displayed for item No.30. :** Refer to inspection procedure P-2 "The ignition switch (IG1) signal is not received P.54E-293."

**Normal condition is not displayed for item No.35. :** Refer to Inspection Procedure K-5 "The headlamp automatic-shutdown function does not work normally P.54E-200."

**Normal condition is not displayed for item No.70. :** Replace the front-ECU.

### Step 3. Connector check: A-14X front-ECU connector.

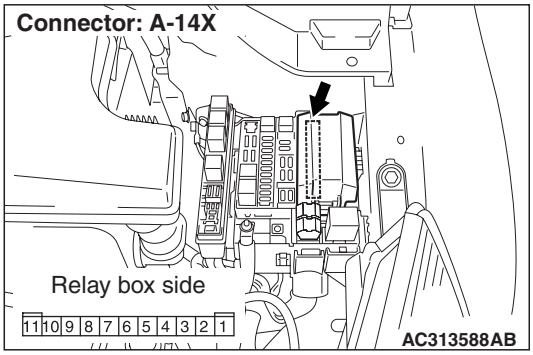


**Q: Is the check result normal?**

**YES :** Go to Step 4.

**NO :** Repair the defective connector.

### Step 4. Voltage measurement at the A-14X front-ECU connector.

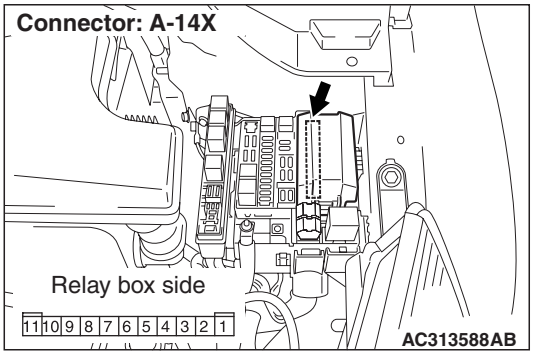


(1) Remove the front-ECU, and measure at the relay box side.

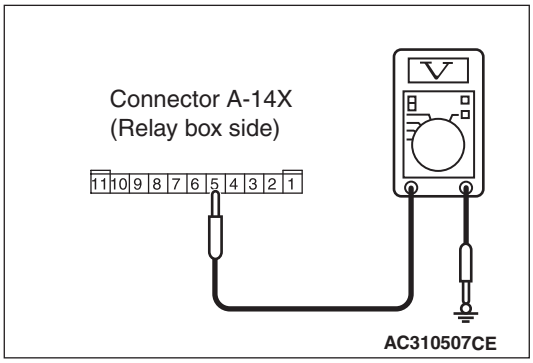


(2) Voltage between A-14X front-ECU connector terminal No.5 and body earth

**OK: System voltage**

**Q: Is the check result normal?**

**YES :** Go to Step 6.

**NO :** Go to Step 5.

Main Index
Group TOC

**Step 5. Check the wiring harness between A-14X front-ECU connector terminal No.5 to the fusible link (26).**

- Check the power supply line for open circuit.

**Q: Is the check result normal?**

**YES :** The trouble can be an intermittent malfunction (Refer to GROUP 00 – How to Cope with Intermittent Malfunction P.00-5).

**NO :** Repair the wiring harness.

**Step 6. Retest the system.**

Check that the tail/stop lamps illuminate normally.

**Q: Is the check result normal?**

**YES :** The trouble can be an intermittent malfunction (Refer to GROUP 00 – How to Cope with Intermittent Malfunction P.00-5).

**NO :** Replace the front-ECU.

## INSPECTION PROCEDURE K-2: The low-beam headlamps do not illuminate normally.

**⚠ CAUTION**

**Whenever the ECU is replaced, ensure that the input and output signal circuits are normal.**

**Headlamp Relay (Low-Beam) Circuit**

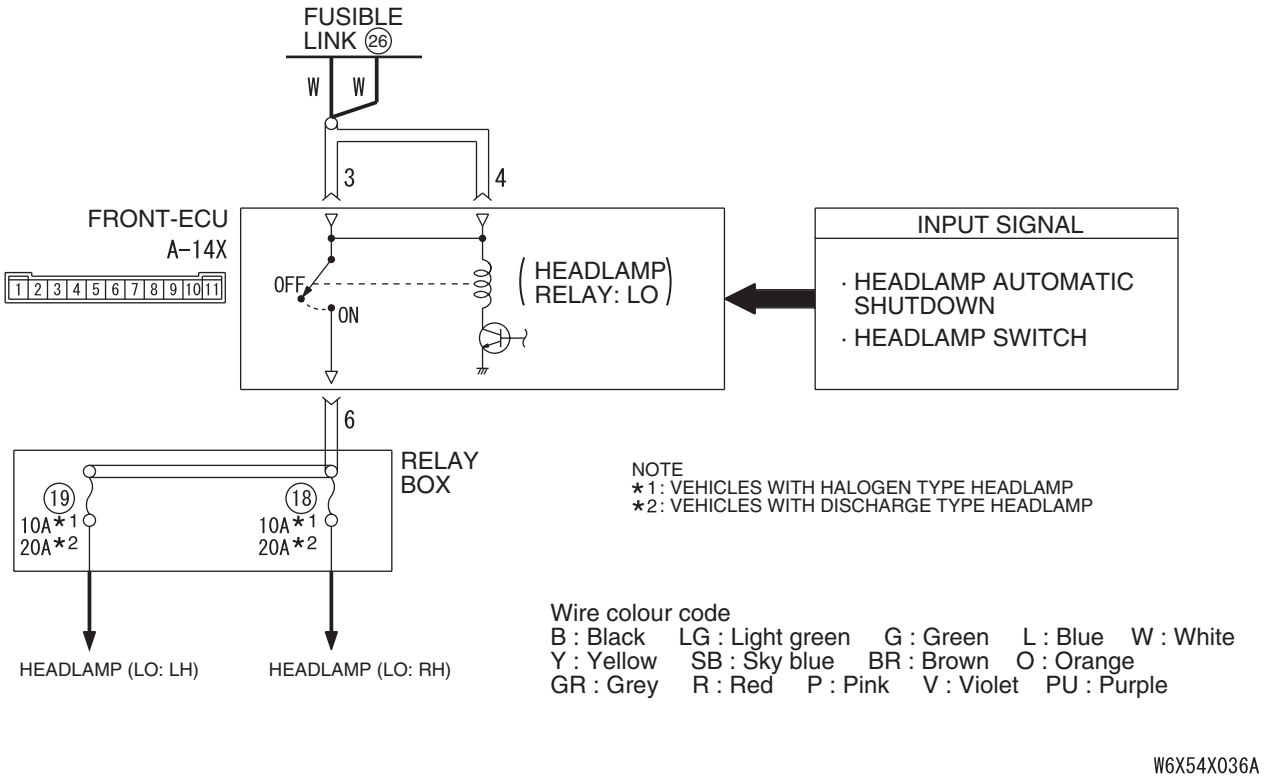


## COMMENTS ON TROUBLE SYMPTOM

If the low-beam headlamps do not illuminate, the headlamp switch input circuit or the front-ECU may be defective.

## POSSIBLE CAUSES

- Malfunction of the column switch
- Malfunction of the front-ECU
- Damaged harness wires and connectors

Main Index
Group TOC

## DIAGNOSIS PROCEDURE

**Step 1. ECU check by using the SWS monitor.**
Check that the power supply and earth lines to the column switch (column-ECU) and the front-ECU and the SWS communication lines are normal.
- Ignition switch: OFF

**ECUS TO BE CHECKED**
- COLUMN ECU
- FRONT ECU

**OK: "OK" is displayed for all the items**

**Q: Is the check result normal?**
**"OK" is displayed for all the items :** Go to Step 2.
**"NG" is displayed on the "COLUMN ECU" menu. :** Refer to Inspection Procedure A-2 "Communication with the column switch (column-ECU) is not possible P.54E-51."
**"NG" is displayed on the "FRONT ECU" menu. :** Refer to Inspection Procedure A-4 "Communication with the front-ECU is not possible P.54E-60."

**Step 2. Function diagnosis by using the SWS monitor.**
Check the SWS communication signal, which are related to the low-beam headlamps.

**<Selected item> LIGHTING - HEADLAMP LO**
- Ignition switch: ON
- Lighting switch: HEAD

| Item No. | Item name | Normal condition |
|---|---|---|
| Item 00 | HEADLAMP SW | ON |
| Item 03 | PASSING SW | OFF |
| Item 30 | IG SW(IG1) | ON |
| Item 35 | HD AUTO-CUT | OFF |
| Item 70 | FRONT ECU ACK | NORMAL ACK |

**OK: Normal conditions are displayed for all the items**

**Q: Is the check result normal?**
**Normal conditions are displayed for all the items. :** Go to Step 3.
**Normal condition is not displayed for item No.00 or 03. :** Refer to inspection procedure P-5 "Column switch (lighting and turn-signal lamp switch) signal is not received P.54E-300."
**Normal condition is not displayed for item No.30. :** Refer to inspection procedure P-2 "The ignition switch (IG1) signal is not received P.54E-293."
**Normal condition is not displayed for item No.35. :** Refer to Inspection Procedure K-5 "The headlamp automatic-shutdown function does not work normally P.54E-200."
**Normal condition is not displayed for item No.70. :** Replace the front-ECU.

**Step 3. Connector check: A-14X front-ECU connector.**

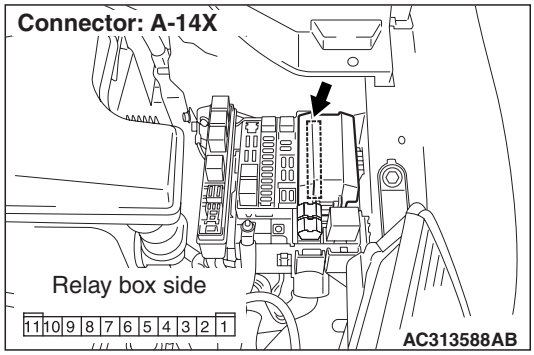


**Q: Is the check result normal?**
**YES :** Go to Step 4.
**NO :** Repair the defective connector.

Main Index
Group TOC

**Step 4. Voltage measurement at the A-14X front-ECU connector.**

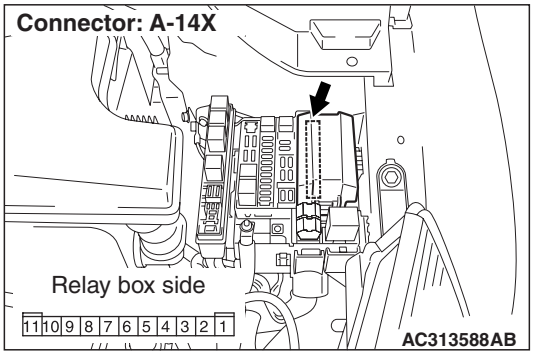


(1) Remove the front-ECU, and measure at the relay box side.

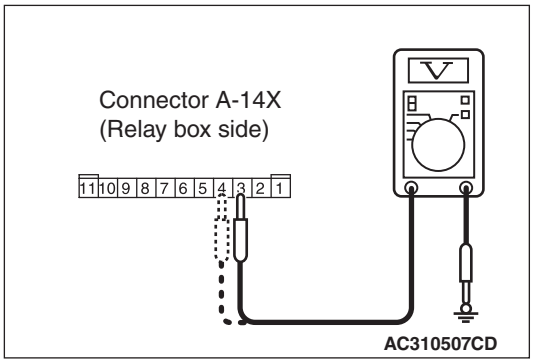


(2) Voltage between A-14X front-ECU connector terminal Nos. 3, 4 and body earth

**OK: System voltage**

**Q: Is the check result normal?**

**YES :** Go to Step 6.
**NO :** Go to Step 5.

**Step 5. Check the wiring harness between A-14X front-ECU connector terminal Nos. 3, 4 to the fusible link (26).**

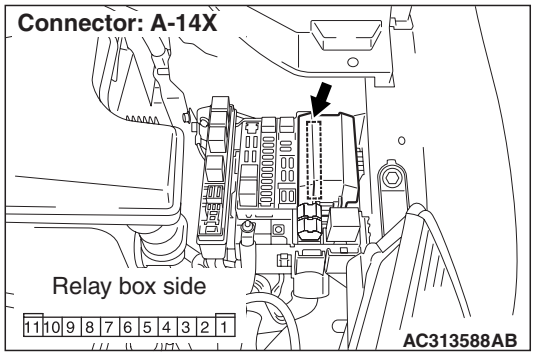


- Check the power supply line for open circuit.

**Q: Is the check result normal?**

**YES :** The trouble can be an intermittent malfunction (Refer to GROUP 00 – How to Cope with Intermittent Malfunction P.00-5).
**NO :** Repair the wiring harness.

**Step 6. Retest the system.**

Check that the low-beam headlamps illuminate normally.

**Q: Is the check result normal?**

**YES :** The trouble can be an intermittent malfunction (Refer to GROUP 00 – How to Cope with Intermittent Malfunction P.00-5).
**NO :** Replace the front-ECU.

Main Index
Group TOC

## INSPECTION PROCEDURE K-3: The high-beam headlamps do not illuminate normally.

**⚠ CAUTION**
**Whenever the ECU is replaced, ensure that the input and output signal circuits are normal.**

**Headlamp Relay (High-Beam) Circuit**

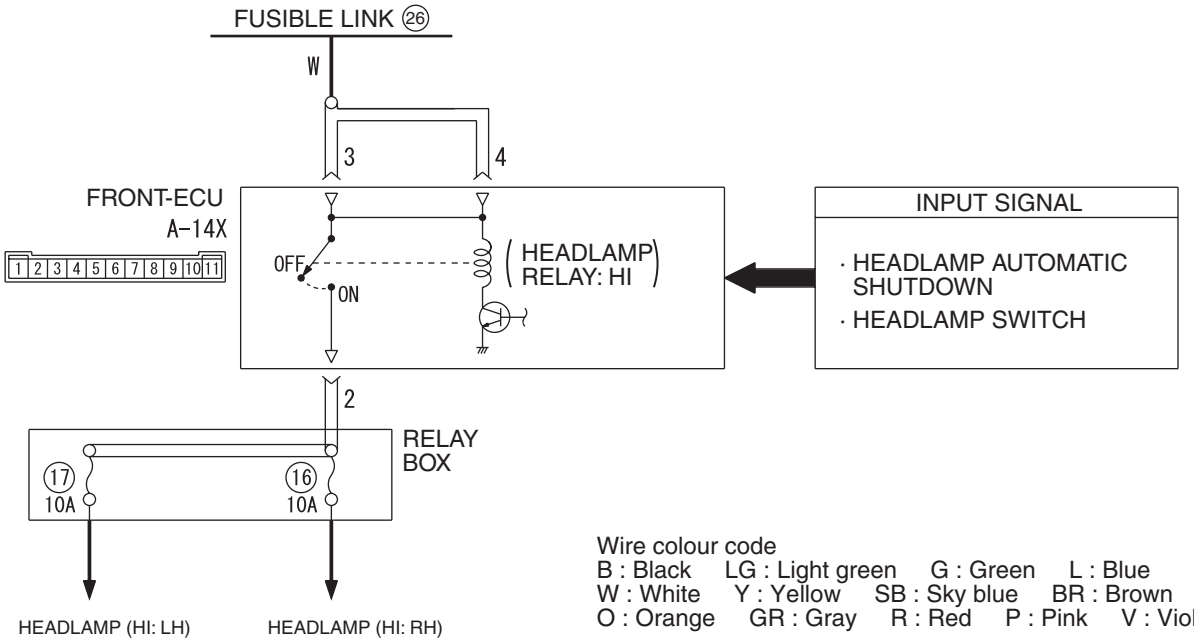


W4X54E28AA

## COMMENTS ON TROUBLE SYMPTOM

If the high-beam headlamps do not illuminate, the dimmer switch input circuit or the front-ECU may be defective.

## POSSIBLE CAUSES

- Malfunction of the column switch
- Malfunction of the front-ECU
- Damaged harness wires and connectors

## DIAGNOSIS PROCEDURE

**Step 1. ECU check by using the SWS monitor.**
Check that the power supply and earth lines to the column switch (column-ECU) and the front-ECU and the SWS communication lines are normal.

- Ignition switch: OFF

**ECUS TO BE CHECKED**

- COLUMN ECU
- FRONT ECU

**OK: "OK" is displayed for all the items**

**Q: Is the check result normal?**

**"OK" is displayed for all the items :** Go to Step 2.

**"NG" is displayed on the "COLUMN ECU" menu. :** Refer to Inspection Procedure A-2 "Communication with the column switch (column-ECU) is not possible P.54E-51."

**"NG" is displayed on the "FRONT ECU" menu. :** Refer to Inspection Procedure A-4 "Communication with the front-ECU is not possible P.54E-60."

Main Index
Group TOC

**Step 2. Function diagnosis by using the SWS monitor.**
Check the SWS communication signal, which are related to the high-beam headlamps.

**<Selected item> LIGHTING - HEADLAMP HI**
- Ignition switch: ON
- Lighting switch: HEAD
- Dimmer switch: from OFF to ON, and then to OFF again

| Item No. | Item name | Normal condition |
|---|---|---|
| Item 00 | HEADLAMP SW | ON |
| Item 02 | DIMMER SW | from OFF to ON, and then to OFF again ("ON" should be displayed when the dimmer switch is operated) |
| Item 03 | PASSING SW | OFF |
| Item 30 | IG SW(IG1) | ON |
| Item 35 | HD AUTO-CUT | OFF |
| Item 70 | FRONT ECU ACK | NORMAL ACK |

**OK: Normal conditions are displayed for all the items**

**Q: Is the check result normal?**
**Normal conditions are displayed for all the items. :** Go to Step 3.
**Normal condition is not displayed for item Nos.00, 02 or 03. :** Refer to inspection procedure P-5 "Column switch (lighting and turn-signal lamp switch) signal is not received P.54E-300."
**Normal condition is not displayed for item No.30. :** Refer to inspection procedure P-2 "The ignition switch (IG1) signal is not received P.54E-293."
**Normal condition is not displayed for item No.35. :** Refer to Inspection Procedure K-5 "The headlamp automatic-shutdown function does not work normally P.54E-200."
**Normal condition is not displayed for item No.70. :** Replace the front-ECU.

**Step 3. Retest the system.**
Check that the high-beam headlamps illuminate normally.

**Q: Is the check result normal?**
**YES :** The trouble can be an intermittent malfunction (Refer to GROUP 00 – How to Cope with Intermittent Malfunction P.00-5).
**NO :** Replace the front-ECU.

## INSPECTION PROCEDURE K-4: The high-beam and low-beam headlamps do not illuminate when the passing switch is operated.

**⚠ CAUTION**
**Whenever the ECU is replaced, ensure that the input and output signal circuits are normal.**

### COMMENTS ON TROUBLE SYMPTOM
If the low-beam and high-beam headlamps are normal, the passing switch input signal circuit or the front-ECU may be defective.

### POSSIBLE CAUSES
- Malfunction of the column switch
- Malfunction of the front-ECU
- Damaged harness wires and connectors

### DIAGNOSIS PROCEDURE

**Step 1. Check the operation of the headlamps.**
Check that the low-beam and high-beam headlamps illuminate normally.

**Q: Is the check result normal?**
**YES :** Go to Step 2.
**NO :** Repair the headlamps. Refer to trouble symptom chart P.54E-40.

Main Index
Group TOC

**Step 2. SWS monitor data list.**
Check the ETACS-ECU signals which are related to the headlamps.

**<Selected item> COLUMN ECU**
- Passing lamp switch: ON

| Item No. | Item name | Normal condition |
|---|---|---|
| Item 03 | PASSING SW | ON |

**OK: Normal condition is displayed.**

**Q: Is the check result normal?**
**YES :** Go to Step 3.
**NO :** Refer to inspection procedure P-5 "Column switch (lighting and turn-signal lamp switch) signal is not received P.54E-300."

**Step 3. Retest the system.**
When the passing switch is turned on, check if the headlamps illuminate normally.

**Q: Is the check result normal?**
**YES :** The trouble can be an intermittent malfunction (Refer to GROUP 00 – How to Cope with Intermittent Malfunction P.00-5).
**NO :** Replace the front-ECU.

## INSPECTION PROCEDURE K-5: The headlamp automatic-shutdown function does not work normally.

**⚠ CAUTION**
**Whenever the ECU is replaced, ensure that the input and output signal circuits are normal.**

**Headlamp Automatic Shutdown Function**

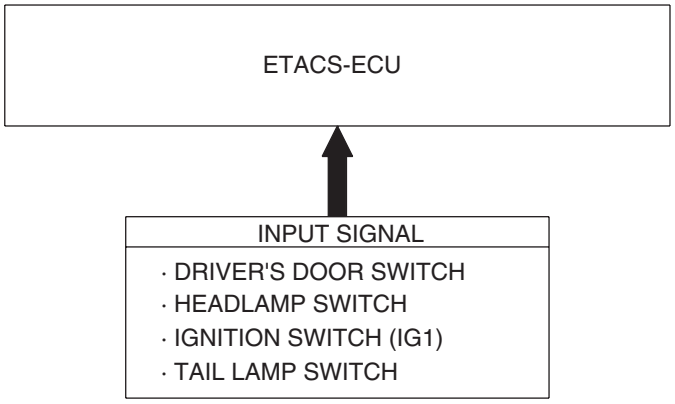


W4X54E162A

## COMMENTS ON TROUBLE SYMPTOM
The ETACS-ECU operates this function in accordance with the input signals below.
- Ignition switch (IG1)
- Driver's door switch
- Tail lamp switch
- Headlamp switch

If this function does not work normally, these input signal circuit(s), the front-ECU or the ETACS-ECU may be defective. On vehicles with keyless entry system, note that this function can be disabled/enabled by the customise function (default setting; enabled).

## POSSIBLE CAUSES
- Malfunction of the driver's door switch
- Malfunction of the front-ECU
- Malfunction of the column switch
- Malfunction of the ETACS-ECU
- Damaged harness wires and connectors

Main Index
Group TOC

## DIAGNOSIS PROCEDURE

**Step 1. Customize function by using the SWS monitor**

Check that "Headlamp auto-cut" is set to "Spec.A(old)" or "Spec.D(DOM)" by using the SWS monitor customise function.

**Q: Is the check result normal?**

**YES :** Go to Step 2.

**NO :** Use the SWS monitor customise function to set "Headlamp auto-cut" to "Spec.A(old)" or "Spec.D(DOM)" (Refer to P.54E-353).

**Step 2. ECU check by using the SWS monitor.**

Check that the power supply and earth lines to the column switch (column-ECU), the ETACS-ECU and the front-ECU and the SWS communication lines are normal.

- Ignition switch: OFF

**ECUS TO BE CHECKED**

- COLUMN ECU
- ETACS ECU
- FRONT ECU

**OK: "OK" is displayed for all the items**

**Q: Is the check result normal?**

**"OK" is displayed for all the items :** Go to Step 3.

**"NG" is displayed on the "COLUMN ECU" menu. :** Refer to Inspection Procedure A-2 "Communication with the column switch (column-ECU) is not possible P.54E-51."

**"NG" is displayed on the "ETACS ECU" menu. :** Refer to Inspection Procedure A-3 "Communication with the ETACS-ECU is not possible P.54E-55."

**"NG" is displayed on the "FRONT ECU" menu. :** Refer to Inspection Procedure A-4 "Communication with the front-ECU is not possible P.54E-60."

**Step 3. SWS monitor data list.**

Check the SWS communication signal, which are related to the headlamp automatic-shutdown function.

**<Selected item> LIGHTING - HD AUTO-CUT**

- Ignition switch: from ON to OFF
- Lighting switch: "TAIL" or "HEAD"

| Item No. | Item name | Normal condition |
|---|---|---|
| Item 00 | HEADLAMP SW | ON when the lighting switch is at HEAD |
| Item 01 | TAIL LAMP SW | ON when the lighting switch is at TAIL |
| Item 30 | IG SW(IG1) | from ON to OFF |
| Item 70 | FRONT ECU ACK | SLEEP ACK or NORMAL ACK |

Check that the M.U.T.-III displays normal condition when the condition above is changed to the condition below.

- Driver's door: open

| Item No. | Item name | Normal condition |
|---|---|---|
| Item 32 | DR DOOR SW | ON |
| Item 35 | HD AUTO-CUT | OFF |

**OK: Normal conditions are displayed for all the items**

**Q: Is the check result normal?**

**Normal conditions are displayed for all the items :** Go to Step 4.

**Normal condition is not displayed for item Nos.00 or 01. :** Refer to inspection procedure P-5 "Column switch (lighting and turn-signal lamp switch) signal is not received P.54E-300."

**Normal condition is not displayed for item No.30. :** Refer to inspection procedure P-2 "The ignition switch (IG1) signal is not received P.54E-293."

**Normal condition is not displayed for item No.32. :** Refer to inspection procedure P-4 "The driver's door switch signal is not received P.54E-298."

**Normal condition is not displayed for item Nos.35 or 70. :** Replace the front-ECU.

Main Index
Group TOC

**Step 4. Retest the system.**
Check that the headlamp automatic-shutdown function works normally.

**Q: Is the check result normal?**
**YES :** The trouble can be an intermittent malfunction (Refer to GROUP 00 – How to Cope with Intermittent Malfunction P.00-5).
**NO :** Replace the ETACS-ECU.

## INSPECTION PROCEDURE K-6: The auto lamp function does not work normally.

**⚠ CAUTION**
**Whenever the ECU is replaced, ensure that the input and output signal circuits are normal.**

**Automatic Lighting Function**

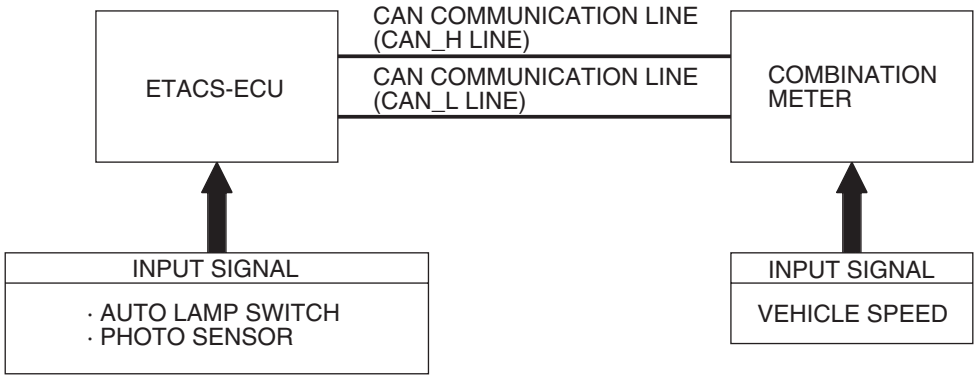


W4X54X063A

## COMMENTS ON TROUBLE SYMPTOM
If auto lamp function does not work normally, the above input signal circuit(s) or the ETACS-ECU may be defective.

## POSSIBLE CAUSES
- Malfunction of the ETACS-ECU
- Malfunction of the front-ECU
- Damaged harness wires and connectors

## DIAGNOSIS PROCEDURE

**Step 1. Check that the tail lamps and headlamps operate.**
Check that the tail lamps and headlamps illuminate normally.

**Q: Is the check result normal?**
**YES :** Go to Step 2.
**NO :** Check the tail lamps and the headlamps (Refer to trouble symptom chart P.54E-40).

**Step 2. M.U.T.-III CAN bus diagnostics**
Use the M.U.T.-III to diagnose the CAN bus lines.

**Q: Is the check result normal?**
**YES :** Go to Step 3.
**NO :** Repair the CAN bus line (Refer to GROUP 54F, Diagnosis P.54F-13).

Main Index
Group TOC

**Step 3. SWS monitor data list.**
Check the ETACS-ECU signals, which are related to the auto lamp function.

**<Selected item> ETACS ECU**
- Ignition switch: ON

| Item No. | Item name | Normal conditions |
|---|---|---|
| Item 30 | IG SW(IG1) | ON |

**OK: Normal condition is displayed.**

**Q: Is the check result normal?**
**YES :** Go to Step 4.
**NO :** Refer to inspection procedure P-2 "The ignition switch (IG1) signal is not received P.54E-293."

**Step 4. ETACS ANALOG data by using the SWS monitor.**
Check the ETACS-ECU signals, which are related to the auto lamp function.
- Vary the light intensity to the photo sensor.

| Item No. | Item name | Normal conditions |
|---|---|---|
| Item 1 | Photo sensor voltage | The voltage changes within a range of 0.68 to 3.8 V. |

**OK: Normal condition is displayed.**

**Q: Is the check result normal?**
**YES :** Go to Step 5.
**NO :** Refer to Inspection Procedure P-22 "The photo sensor signal is not received P.54E-344."

**Step 5. ETACS ANALOG data by using the SWS monitor.**
Check the ETACS-ECU input signals, which are related to the auto lamp function.
- Set the simulated vehicle speed at approximately 10km/h.

| Item No. | Item name | Normal condition |
|---|---|---|
| Item 3 | Vehicle speed | 8 to 10 km/h |

**OK: Normal condition is displayed.**

**Q: Is the check result normal?**
**YES :** Go to Step 6.
**NO :** Refer to inspection procedure P-21 "The vehicle speed signal is not received P.54E-343."

**Step 6. Retest the system.**
Check that the auto lamp function works normally.

**Q: Is the check result normal?**
**YES :** The trouble can be an intermittent malfunction (Refer to GROUP 00 – How to Cope with Intermittent Malfunction P.00-5).
**NO :** Replace the ETACS-ECU.

Main Index
Group TOC

## INSPECTION PROCEDURE K-7: The wiper-linked auto lamp function does not work normally.

**⚠ CAUTION**
**Whenever the ECU is replaced, ensure that the input and output signal circuits are normal.**

**Wiper Interlocked Automatic Lighting Function**

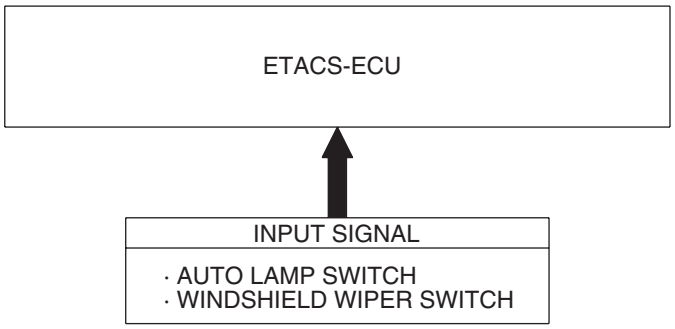


W4X54X064A

## COMMENTS ON TROUBLE SYMPTOM

If this function does not work normally, the input signal circuit(s) below or the ETACS-ECU may be defective.

- Automatic lighting switch
- Windshield wiper switch

## POSSIBLE CAUSES

- The lighting switch is defective
- The windshield wiper switch is defective.
- Malfunction of the ETACS-ECU
- Damaged harness wires and connectors

## DIAGNOSIS PROCEDURE

### Step 1. Customise function by using the SWS monitor

Use the SWS monitor customisation function to confirm that "Headlamp synchronized wiper" is set to "With function".

**Q: Is the check result normal?**
**YES :** Go to Step 2.
**NO :** Use the SWS monitor customisation function to set "Headlamp synchronized wiper" to "With function" (Refer to P.54E-353).

### Step 2. Check the operation of the windshield wipers.

Check that the windshield wipers work normally by operating the relevant switches.

**Q: Is the check result normal?**
**YES :** Go to Step 3.
**NO :** Refer to inspection procedure G-1 "The windshield wipers do not work at all P.54E-147."

### Step 3. Checking auto lamp operation

Check that the auto lamp function works normally.

**Q: Is the check result normal?**
**YES :** Go to Step 4.
**NO :** Refer to inspection procedure K-6 "The auto lamp function does not work normally P.54E-202."

### Step 4. Retest the system.

Check that the wiper-linked auto-lamp function works normally.

**Q: Is the check result normal?**
**YES :** The trouble can be an intermittent malfunction (Refer to GROUP 00 – How to Cope with Intermittent Malfunction P.00-5).
**NO :** Replace the ETACS-ECU.

Main Index
Group TOC

## INSPECTION PROCEDURE K-8: Any of tail lamps, position lamps or licence plate lamp does not illuminate.

**⚠ CAUTION**

**Whenever the ECU is replaced, ensure that the input and output signal circuits are normal.**

**Tail Lamps, Position Lamps and License Plate Lamps Circuit**

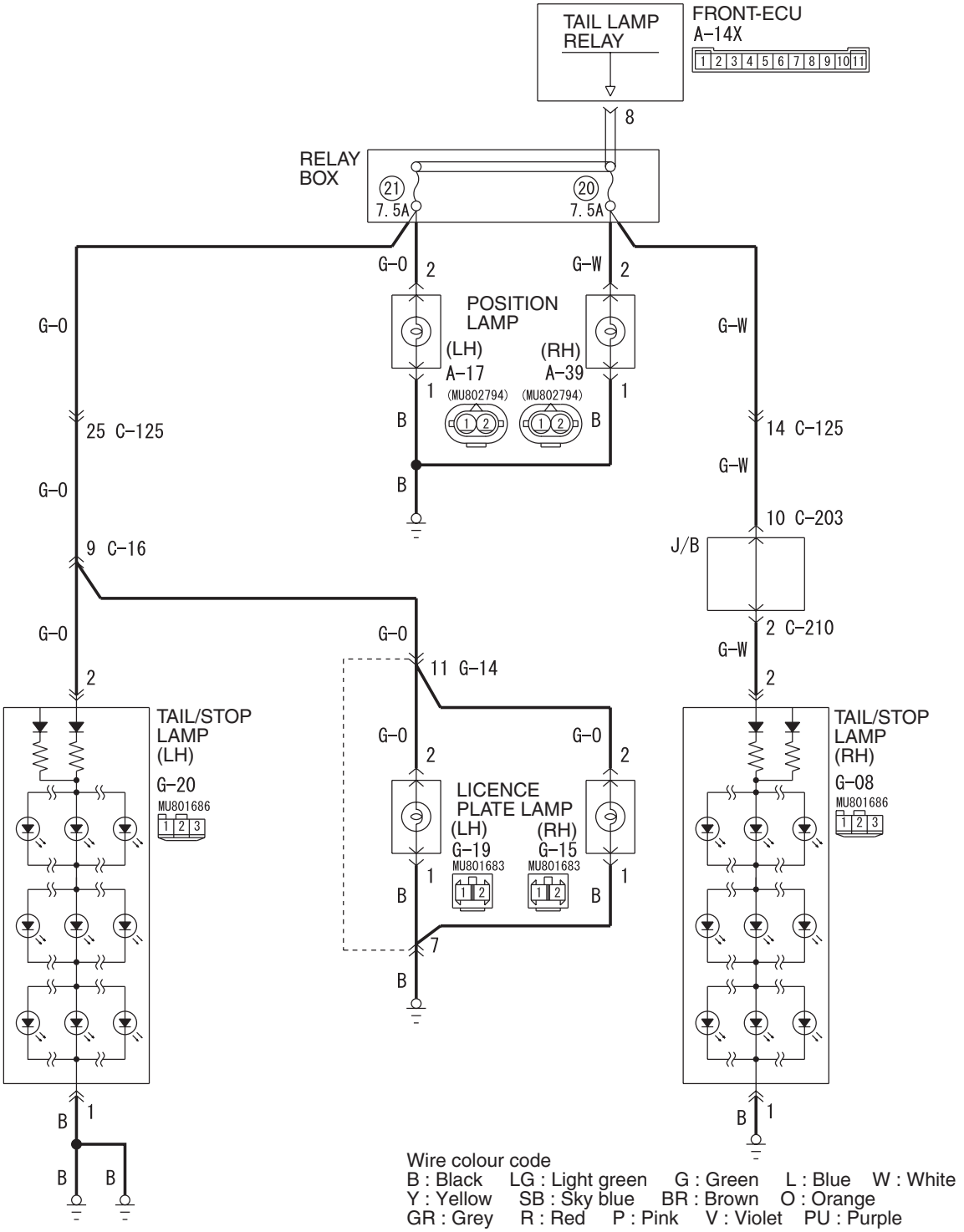


W6X54X037A

Main Index
Group TOC

## COMMENTS ON TROUBLE SYMPTOM

If the tail lamps, the position lamps or the licence plate lamps do not illuminate, the wiring harness connector(s), the bulb or the fuse may be defective or burned out.

## POSSIBLE CAUSES

- Burned-out bulb
- Damaged harness wires and connectors

## DIAGNOSIS PROCEDURE

**Step 1. Connector check: G-08 tail/stop lamp (RH) connector or G-20 tail/stop lamp (LH) connector, A-39 position lamp (RH) connector or A-17 position lamp (LH) connector, G-15 licence plate lamp (RH) connector or G-19 licence plate lamp (LH) connector.**

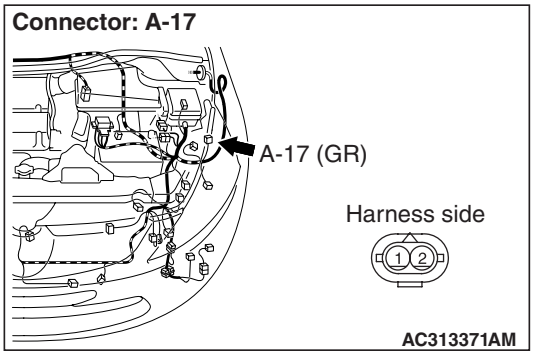


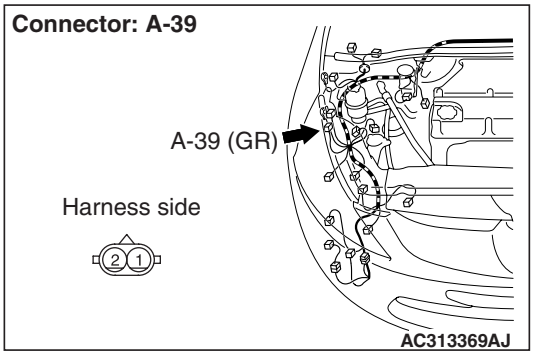


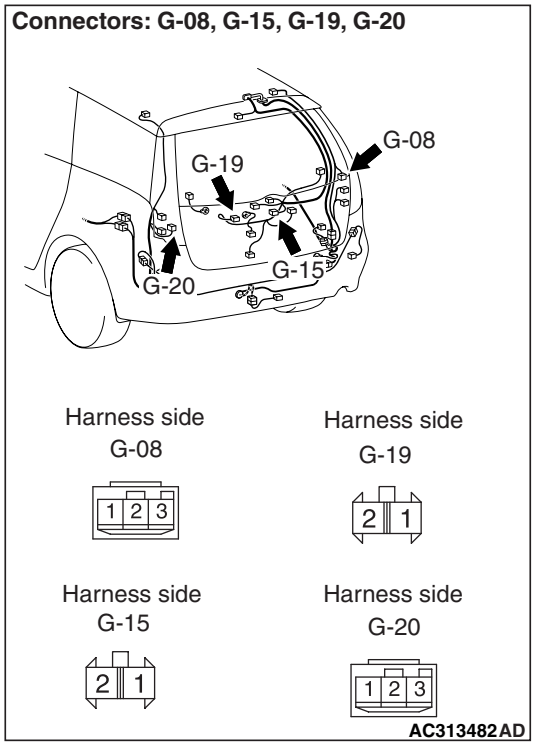


**Q: Is the check result normal?**
**YES :** Go to Step 2.
**NO :** Repair the defective connector.

**Step 2. Check the bulbs of the position lamp or the licence plate lamp.**

Check the bulb of the lamp which does not illuminate.

**Q: Is the check result normal?**
**YES :** Go to Step 3.
**NO :** Replace the bulb of the lamp which does not illuminate.

Main Index
Group TOC

**Step 3. Resistance measurement at the G-08 tail/stop lamp (RH) connector or G-20 tail/stop lamp (LH) connector, the A-39 position lamp (RH) connector or A-17 position lamp (LH) connector, the G-15 licence plate lamp (RH) connector or G-19 licence plate lamp (LH) connector.**

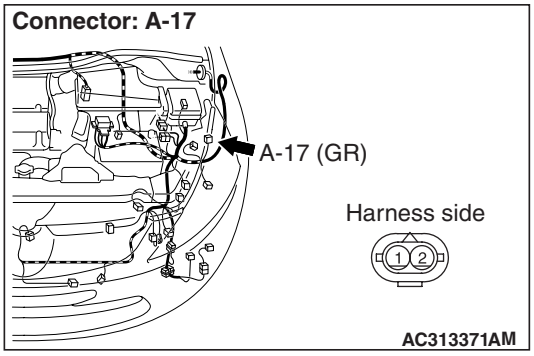


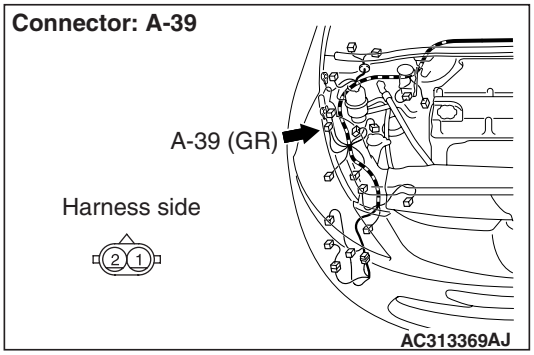


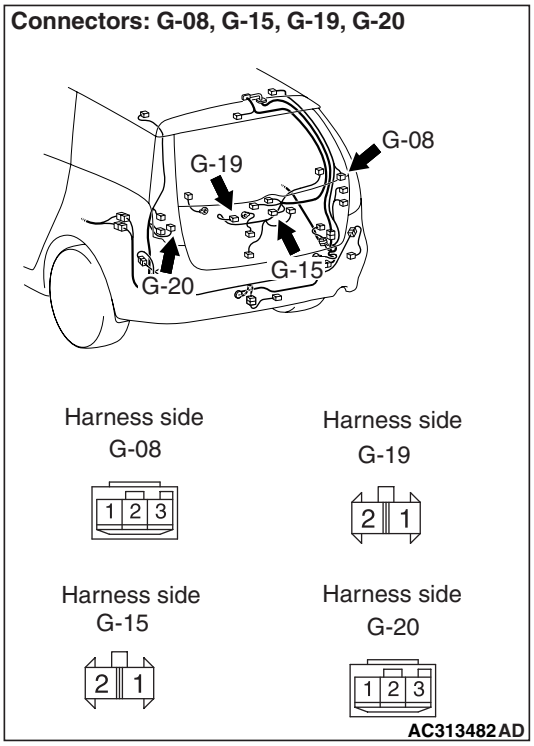


(1) Disconnect the connector, and measure at the wiring harness side.

(2) Check the resistance between the lamp connector and body earth.

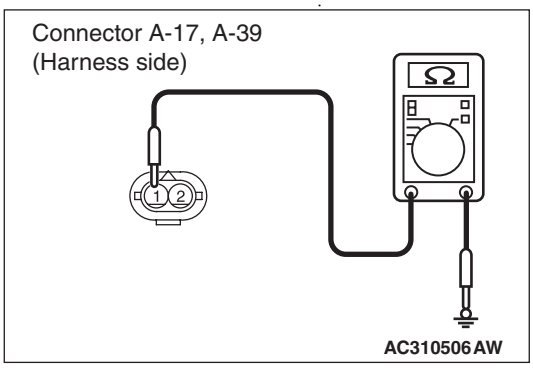


Resistance between A-39 position lamp (RH) connector terminal No.1 and body earth

- Resistance between A-17 position lamp (LH) connector terminal No.1 and body earth

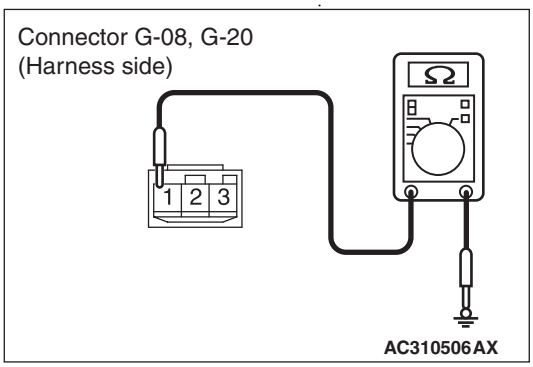


Resistance between G-08 tail/stop lamp (RH) connector terminal No.1 and body earth

- Resistance between G-20 tail/stop lamp (LH) connector terminal No.1 and body earth

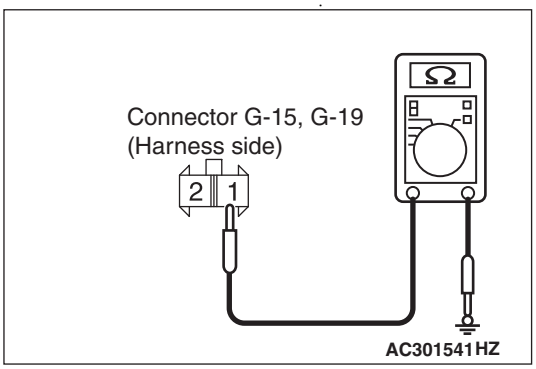


Resistance between G-15 licence plate lamp (RH) connector terminal No.1 and body earth

- Resistance between G-19 licence plate lamp (LH) connector terminal No.1 and body earth

**OK: 2 Ω or less**

**Q: Is the check result normal?**

**YES :** Go to Step 5.
**NO :** Go to Step 4.

Main Index
Group TOC

**Step 4. Check the wiring harness from G-08 tail/stop lamp (RH) connector terminal No.1, G-20 tail/stop lamp (LH) connector terminal No.1, G-15 licence plate lamp (RH) connector terminal No.1, G-19 licence plate lamp (LH) connector terminal No.1, A-39 position lamp (RH) connector terminal No.1 or A-17 position lamp (LH) connector terminal No.1 to body earth.**

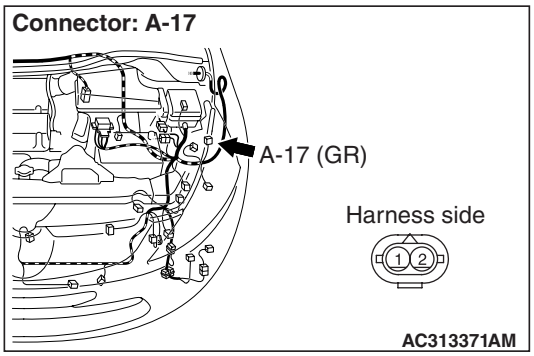


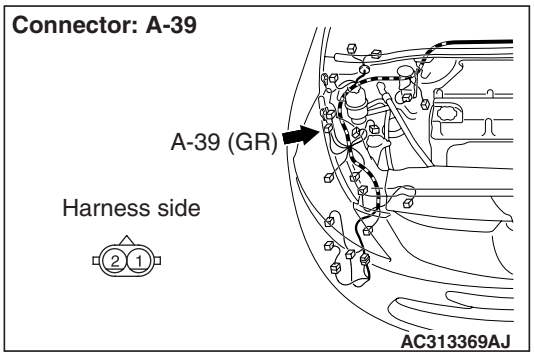


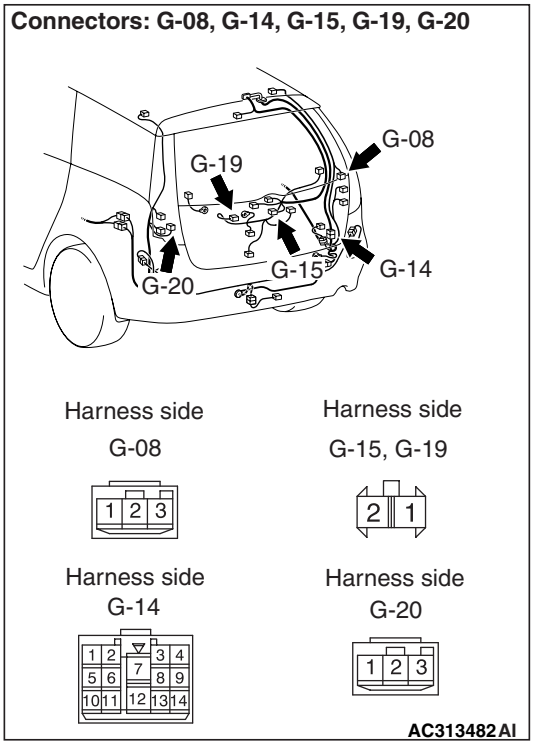


*NOTE: Prior to the wiring harness inspection, check intermediate connector G-14 <licence plate lamp>, and repair if necessary.*

- Check the earth wires for open circuit.

**Q: Is the check result normal?**
**YES :** Go to Step 5.
**NO :** Repair the wiring harness.

**Step 5. Connector check: A-14X front-ECU connector.**

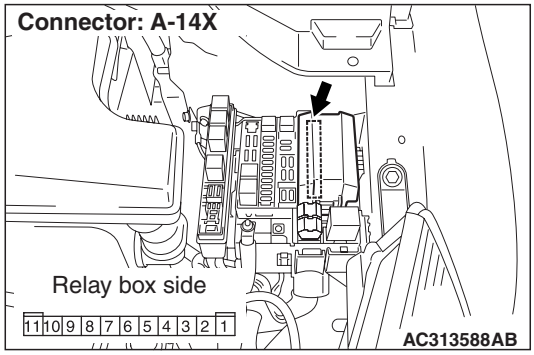


**Q: Is the check result normal?**
**YES :** Go to Step 6.
**NO :** Repair the defective connector.

Main Index
Group TOC

**Step 6. Check the wiring harness from G-08 tail/stop lamp (RH) connector terminal No.2, G-20 tail/stop lamp (LH) connector terminal No.2, A-39 position lamp (RH) connector terminal No.2, A-17 position lamp (LH) connector terminal No.2, G-15 licence plate lamp (RH) connector terminal No.2 or G-19 licence plate lamp (LH) connector terminal No.2 to A-14X front-ECU connector terminal No.8.**

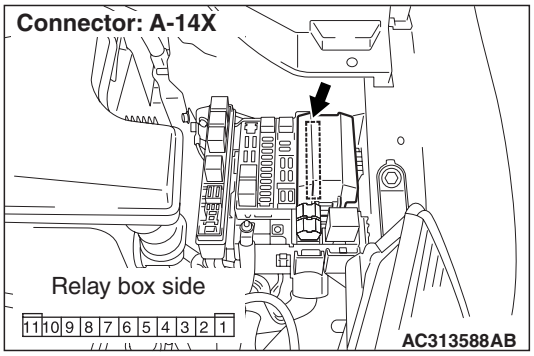


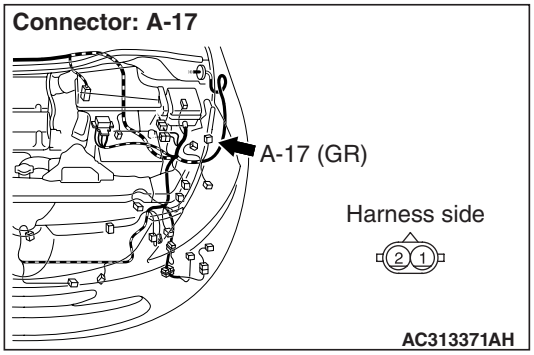


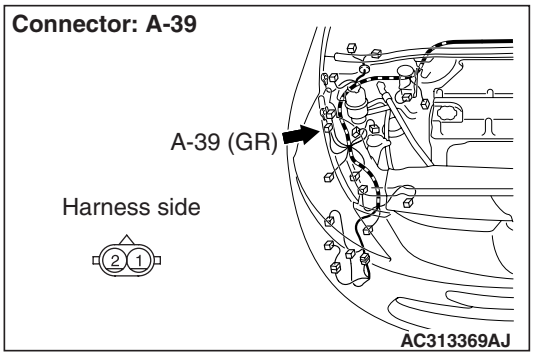


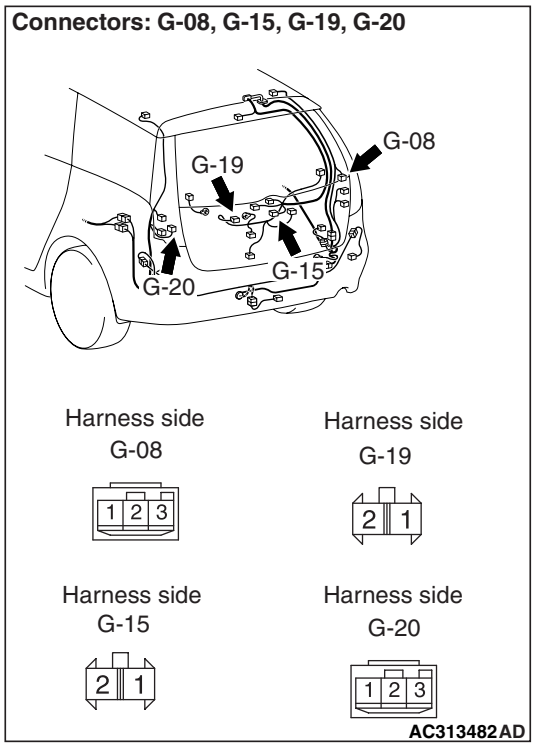


*NOTE:*

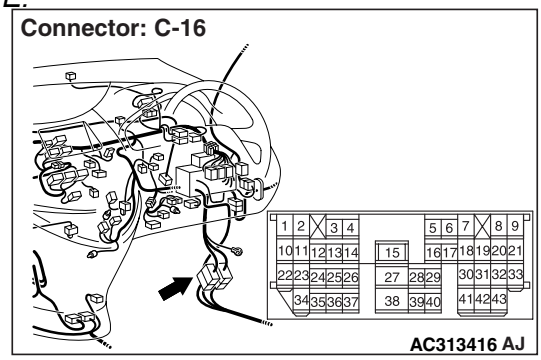


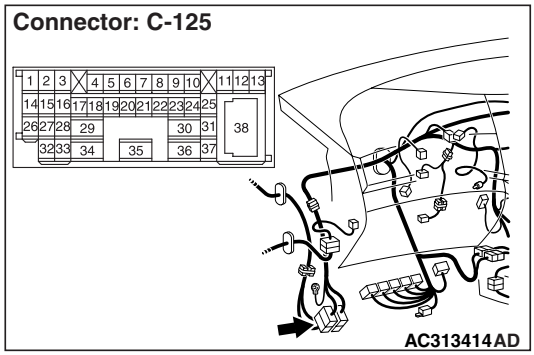

Main Index
Group TOC

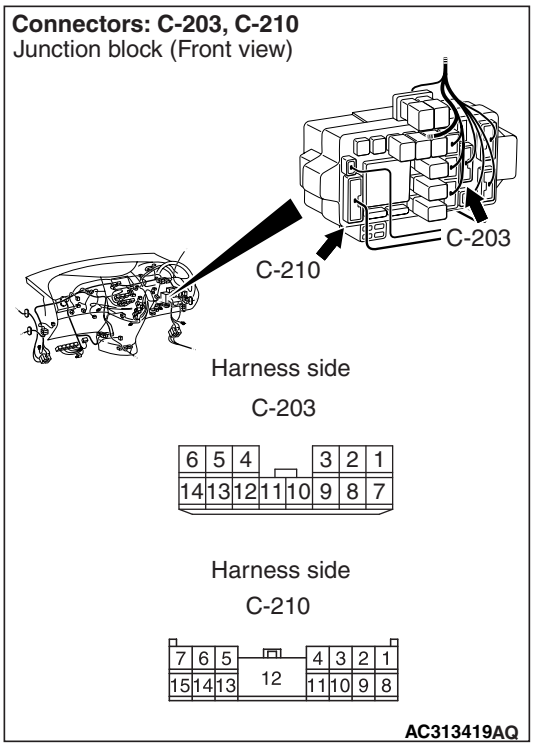


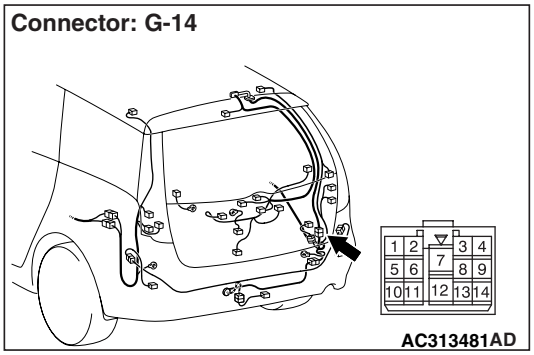


*Prior to the wiring harness inspection, check intermediate connector C-16 <tail/stop lamp (LH) and licence plate lamp>, C-125 <tail/stop lamp and licence plate lamp>, G-14 <licence plate lamp>, junction block connector C-203 <tail/stop lamp (LH)> and C-210 <tail/stop lamp (LH)>, and repair if necessary.*

- Check the output lines for open circuit.

**Q: Is the check result normal?**

**YES :** Go to Step 7.

**NO :** Repair the wiring harness.

**Step 7. Retest the system.**

Check that the tail lamps, the position lamps and the licence plate lamps illuminate normally.

**Q: Is the check result normal?**

**The lamps illuminate normally at both high and low beams. :** The trouble can be an intermittent malfunction (Refer to GROUP 00 – How to Cope with Intermittent Malfunction P.00-5).

**When the tail/stop lamps do not illuminate :** Replace the tail/stop lamp socket assembly.

**When the position lamps do not illuminate :** Replace the position lamp socket.

**When the licence plate lamps do not illuminate :** Replace the licence plate lamp socket.

Main Index
Group TOC

## INSPECTION PROCEDURE K-9: The headlamp(s) do not illuminate. <Vehicles with halogen type headlamp>

**⚠ CAUTION**
**Whenever the ECU is replaced, ensure that the input and output signal circuits are normal.**

**Headlamps Circuit <Vehicles with Halogen Type Headlamp>**

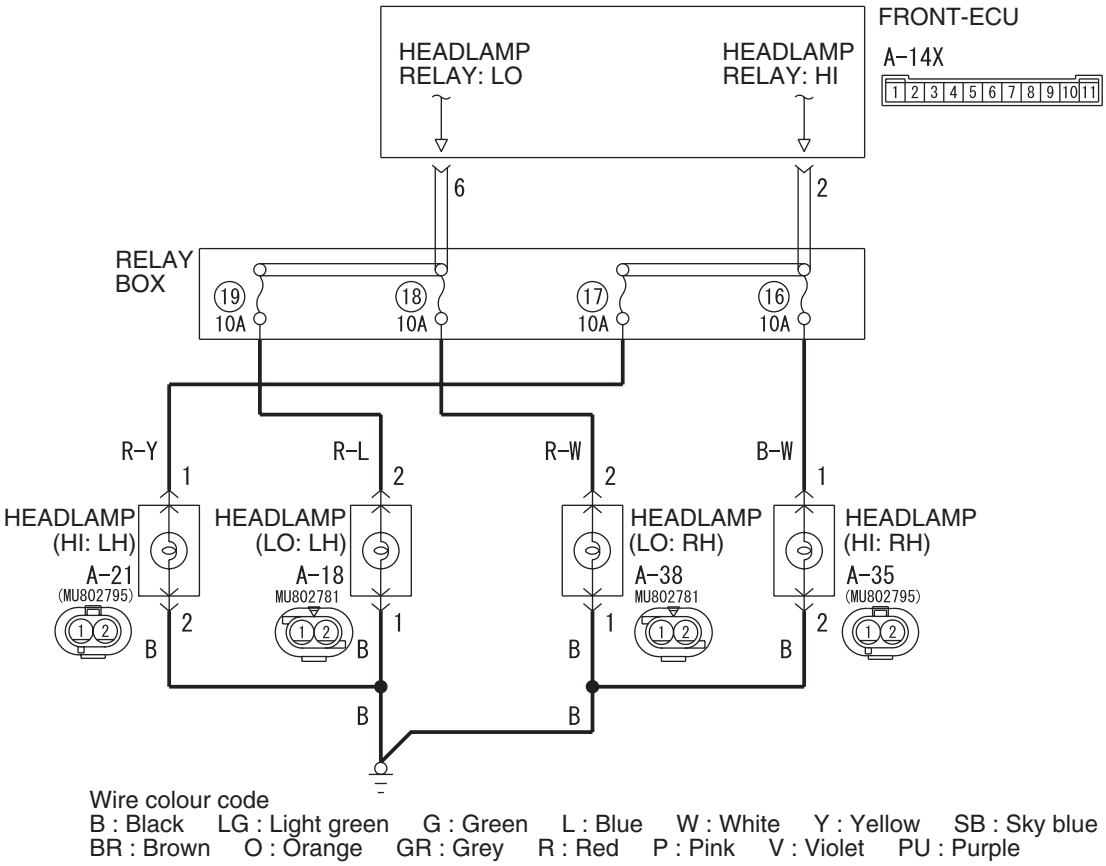


W6X54X038A

## COMMENTS ON TROUBLE SYMPTOM

If any of the headlamps does not illuminate, the wiring harness connector(s), the bulb or the fuse may be defective or burned out.

## POSSIBLE CAUSES

- Malfunction of the headlamp bulbs
- Damaged harness wires and connectors

Main Index
Group TOC

## DIAGNOSIS PROCEDURE

**Step 1. Connector check: A-35 head lamp (HI: RH) connector or A-21 head lamp (HI: LH) connector, A-38 head lamp (LO: RH) connector or A-18 head lamp (LO: LH) connector.**

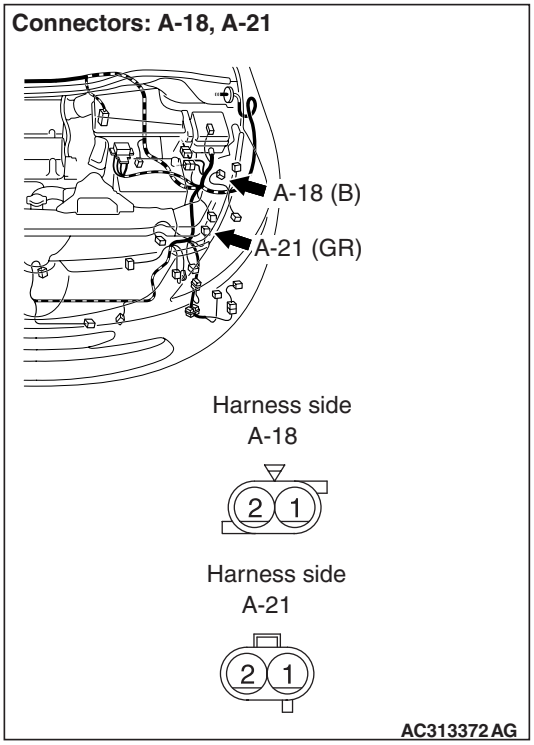


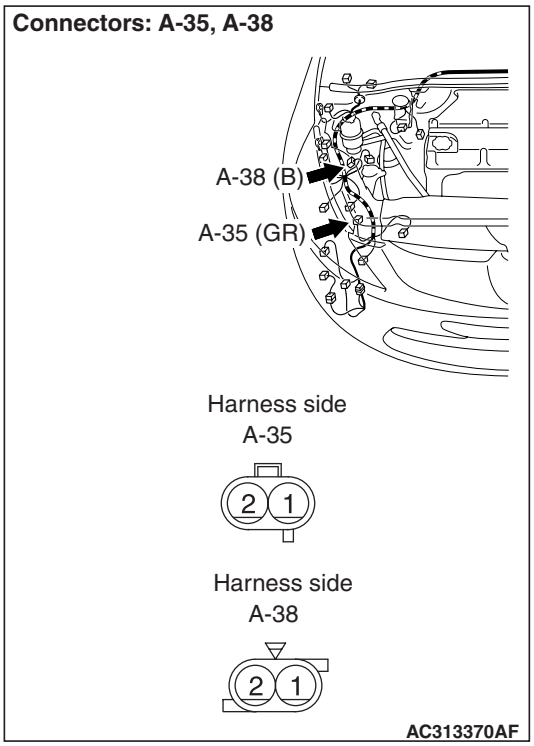


**Q: Is the check result normal?**
**YES :** Go to Step 2.
**NO :** Repair the defective connector.

**Step 2. Check the bulbs of the head lamp.**
Check the bulb of the lamp which does not illuminate.

**Q: Is the check result normal?**
**YES :** Go to Step 3.
**NO :** Replace the bulb of the lamp which does not illuminate.

Main Index
Group TOC

**Step 3. Resistance measurement at the A-35 head lamp (HI: RH) connector or A-21 head lamp (HI: LH) connector, A-38 head lamp (LO: RH) connector or A-18 head lamp (LO: LH) connector.**

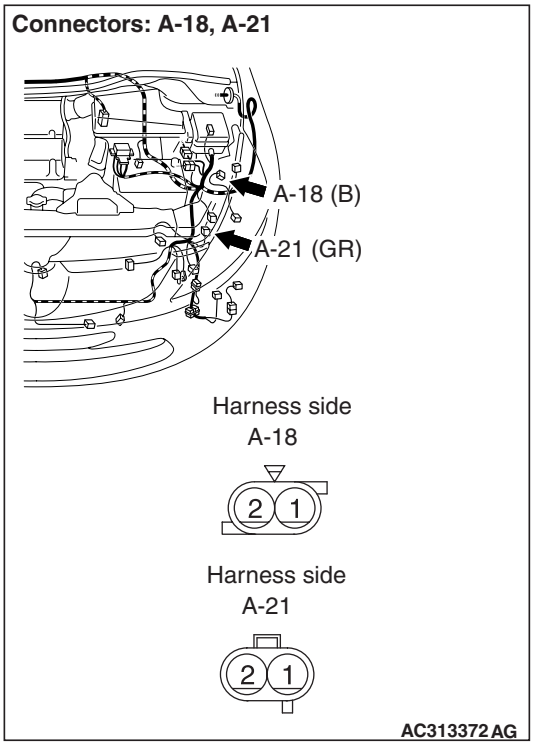


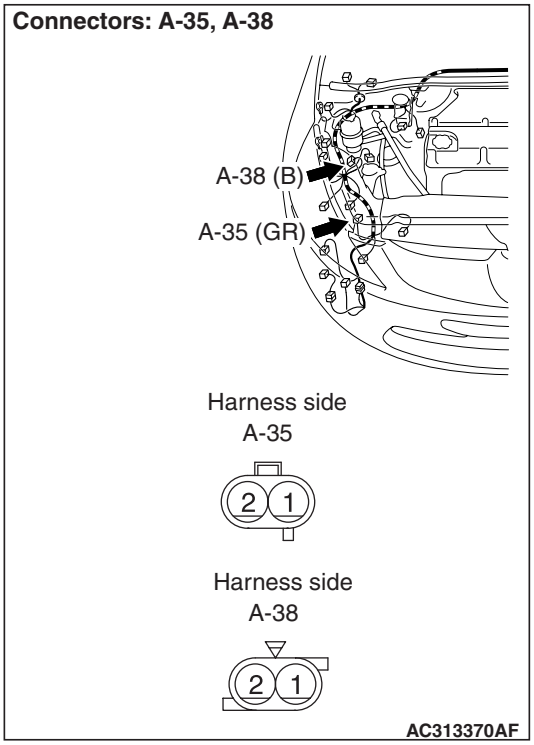


(1) Disconnect the connector, and measure at the wiring harness side.

(2) Check the resistance between the lamp connector and body earth.

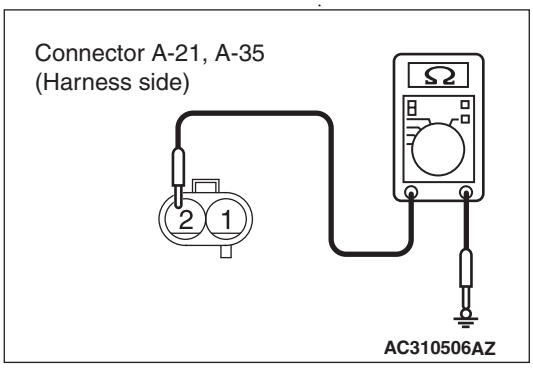


Resistance between A-35 headlamp (HI: RH) connector terminal No.2 and body earth

- Resistance between A-21 headlamp (HI: LH) connector terminal No.2 and body earth

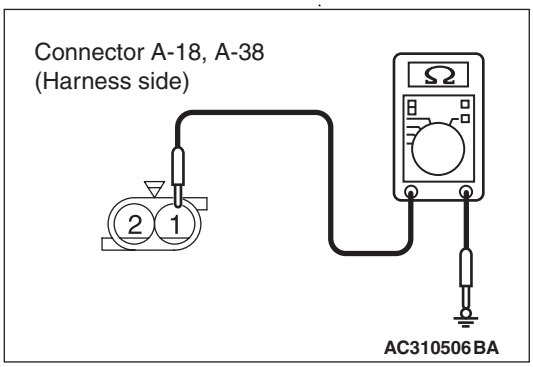


Resistance between A-38 headlamp (LO: RH) connector terminal No.1 and body earth

- Resistance between A-18 headlamp (LO: LH) connector terminal No.1 and body earth

**OK: 2 Ω or less**

**Q: Is the check result normal?**

**YES :** Go to Step 5.

**NO :** Go to Step 4.

Main Index
Group TOC

**Step 4. Check the wiring harness from A-35 head lamp (HI: RH) connector terminal No.2, A-21 head lamp (HI: LH) connector terminal No.2, A-38 head lamp (LO: RH) connector terminal No.1 or A-18 head lamp (LO: LH) connector terminal No.1 to body earth.**

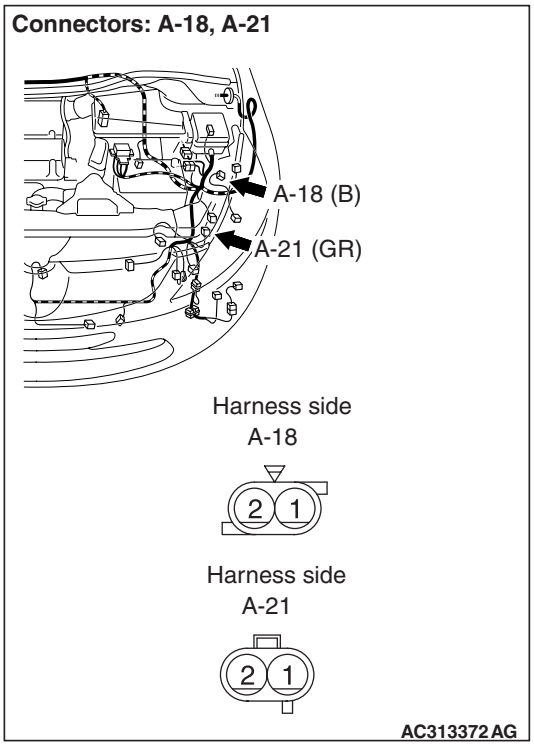


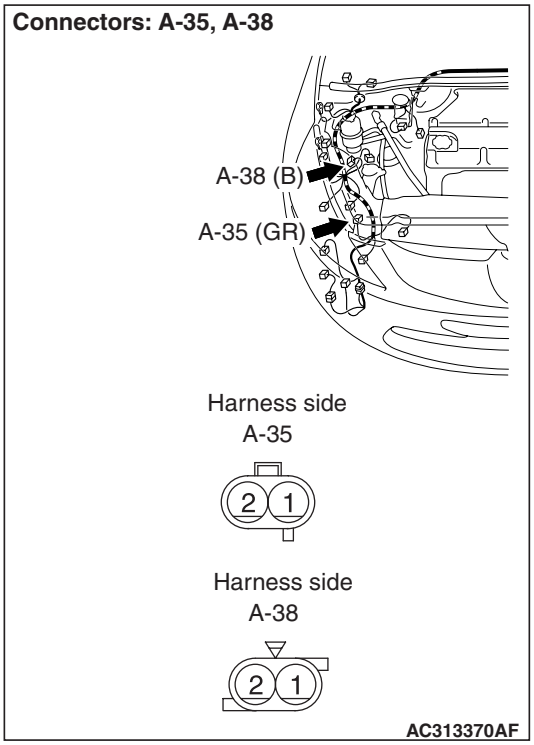


- Check the earth wires for open circuit.

**Q: Is the check result normal?**
**YES :** Go to Step 7.
**NO :** Repair the wiring harness.

**Step 5. Connector check: A-14X front-ECU connector.**

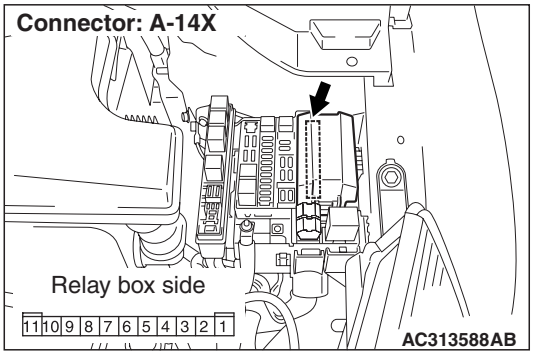


**Q: Is the check result normal?**
**YES :** Go to Step 6.
**NO :** Repair the defective connector.

**Step 6. Check the wiring harness from A-35 head lamp (HI: RH) connector and A-21 head lamp (HI: LH) connector terminal No.1 or A-38 head lamp (LO: RH) connector and A-18 head lamp (LO: LH) connector terminal No.2 to A-14X front-ECU connector terminal Nos.2 (HI) or 6 (LO).**

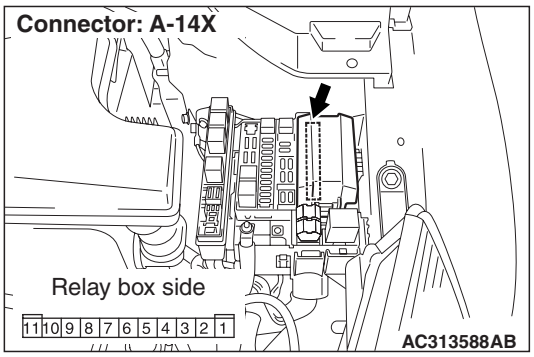


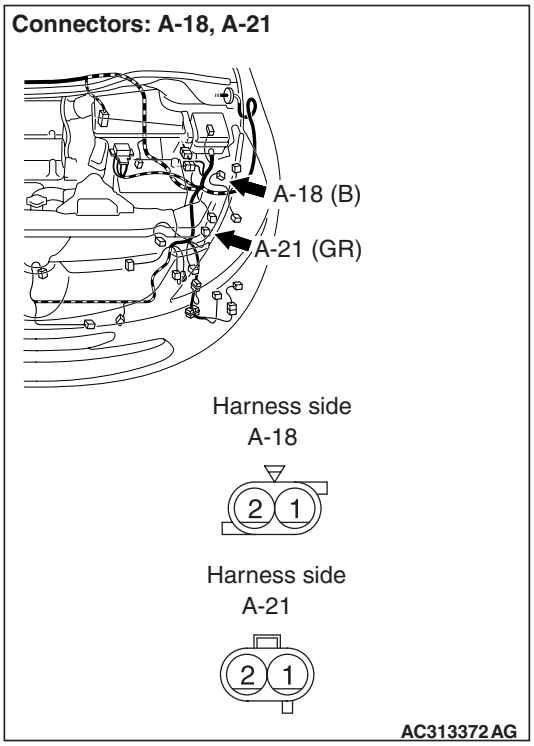


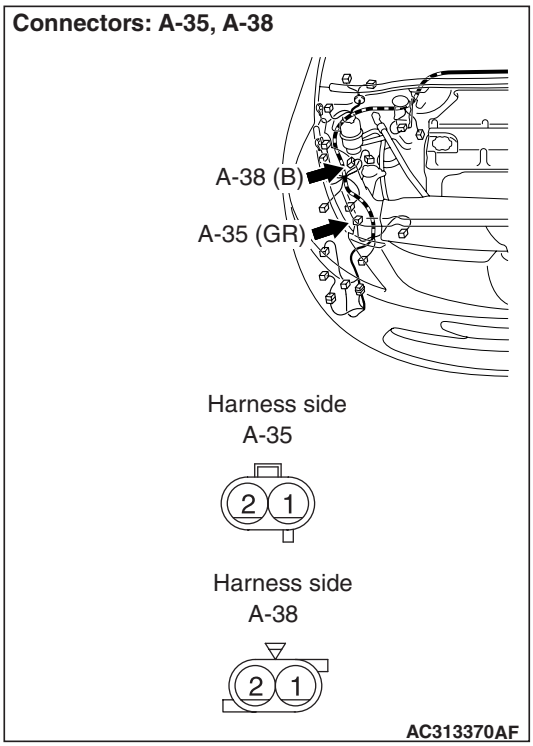


- Check the output lines for open circuit.

**Q: Is the check result normal?**
**YES :** Go to Step 7.
**NO :** Repair the wiring harness.

**Step 7. Retest the system.**
(1) Replace the socket of the defective headlamp.
(2) Check that the headlamps operate normally.

**Q: Is the check result normal?**
**YES :** The trouble can be an intermittent malfunction (Refer to GROUP 00 – How to Cope with Intermittent Malfunction P.00-5).
**NO :** Replace the headlamp assembly.

Main Index
Group TOC

## Inspection Procedure K-10: The headlamp(s) do not illuminate. <Vehicles with discharge type headlamp>

**⚠ CAUTION**

- **If discharge-type headlamps do not illuminate, carry out troubleshooting by reading through the precautions in GROUP 54A – Troubleshooting for headlamps. Refer to P.54A-103.**
- **Whenever the ECU is replaced, ensure that the input and output signal circuits are normal.**

**Headlamps Circuit <Vehicles with Discharge Type Headlamp>**

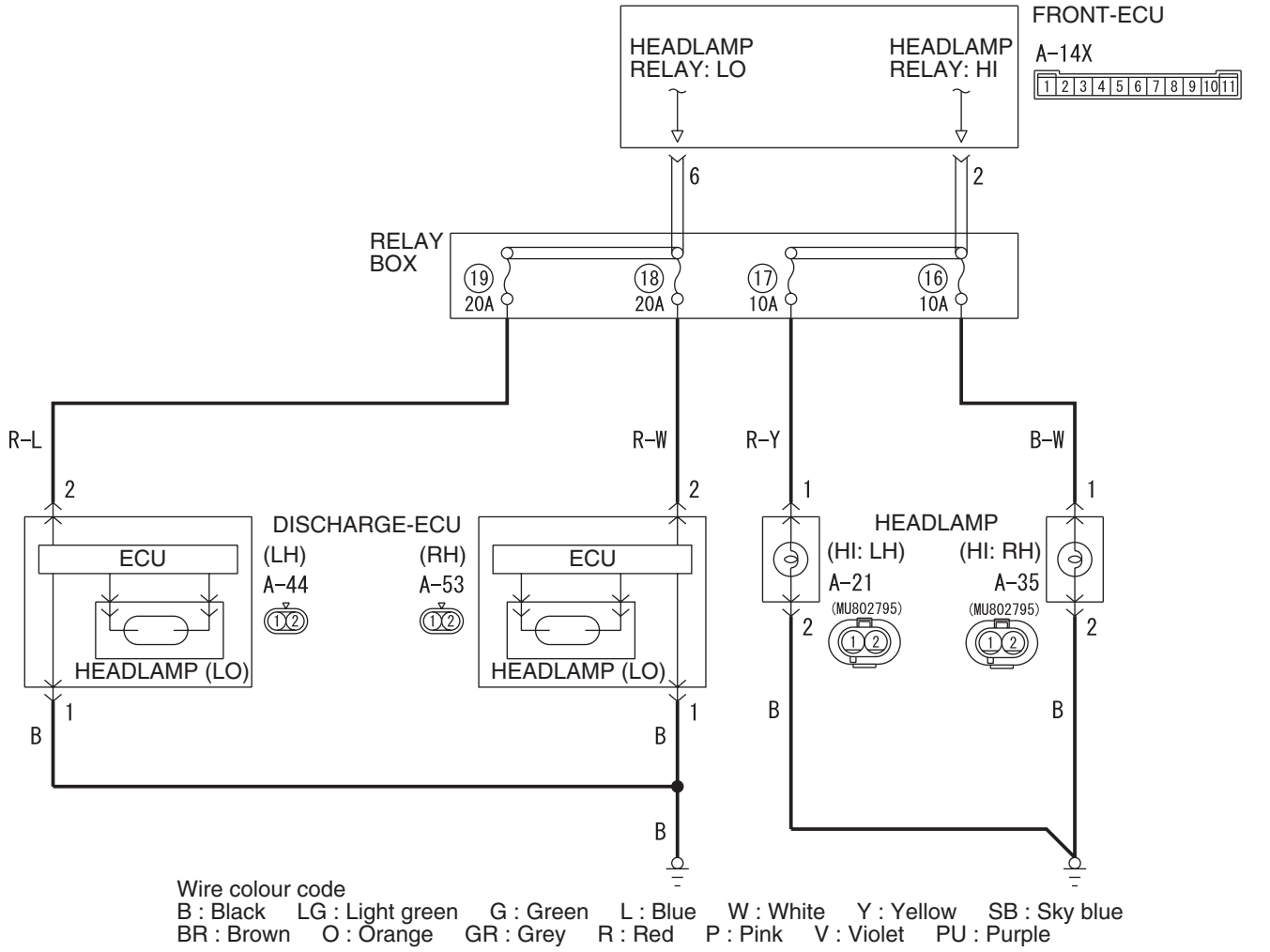


W6X54X039A

## COMMENTS ON TROUBLE SYMPTOM

If any of the headlamps does not illuminate, the wiring harness connector(s), the bulb or the fuse may be defective or burned out.

## POSSIBLE CAUSES

- Malfunction of the headlamp bulbs
- Damaged harness wires and connectors

Main Index
Group TOC

## DIAGNOSIS PROCEDURE

**Step 1. Connector check: A-35 headlamp (HI: RH) connector or A-21 headlamp (HI: LH) connector, A-53 discharge-ECU (RH) connector or A-44 discharge-ECU (LH) connector.**

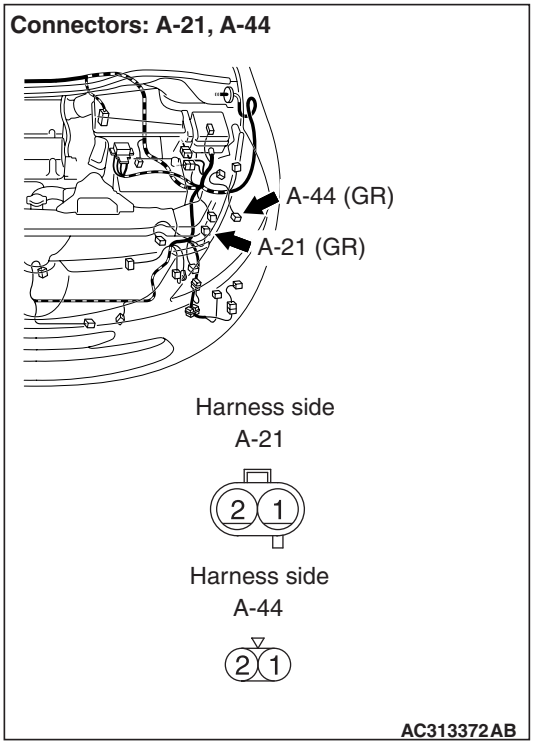


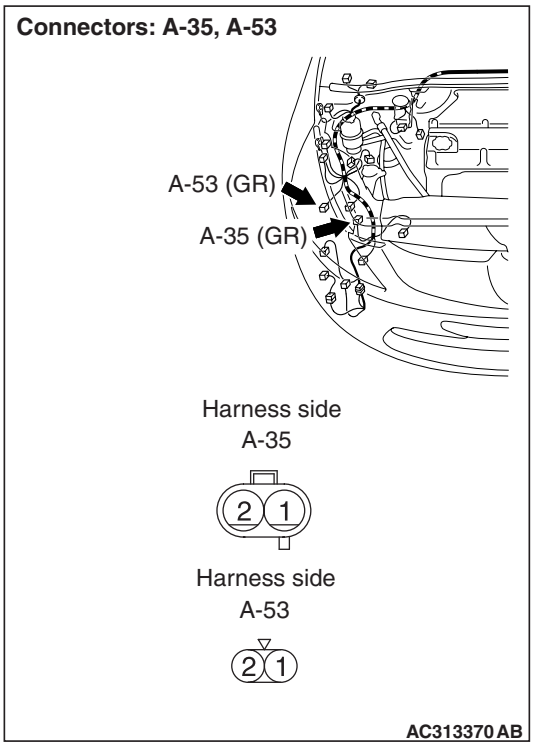


**Q: Is the check result normal?**
**YES :** Go to Step 2.
**NO :** Repair the defective connector.

**Step 2. Check the bulbs of the headlamp.**
Check the bulb of the lamp which does not illuminate.

*NOTE: If discharge-type lower beam headlamps do not illuminate, their bulbs cannot be inspected. In this case, assume the bulbs to be normal and proceed with steps.*

**Q: Is the check result normal?**
**YES :** Go to Step 3.
**NO :** Replace the bulb of the lamp which does not illuminate.

Main Index
Group TOC

**Step 3. Resistance measurement at the A-35 headlamp (HI: RH) connector or A-21 headlamp (HI: LH) connector, A-53 discharge-ECU (RH) connector or A-44 discharge-ECU (LH) connector.**

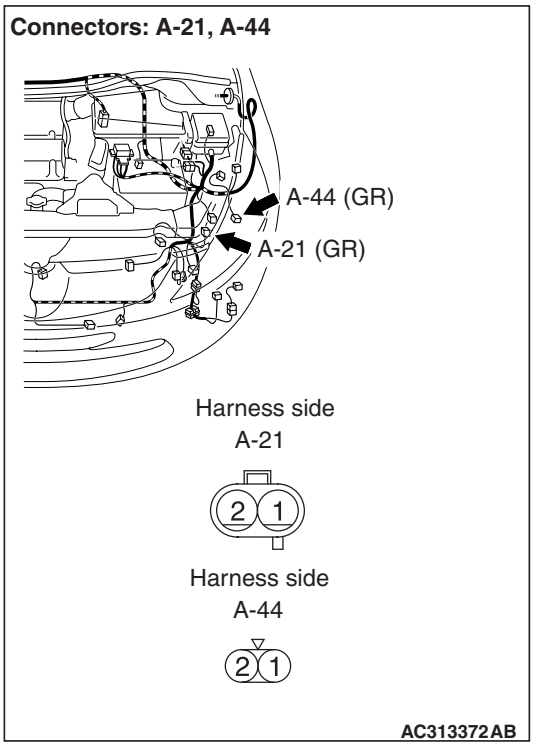


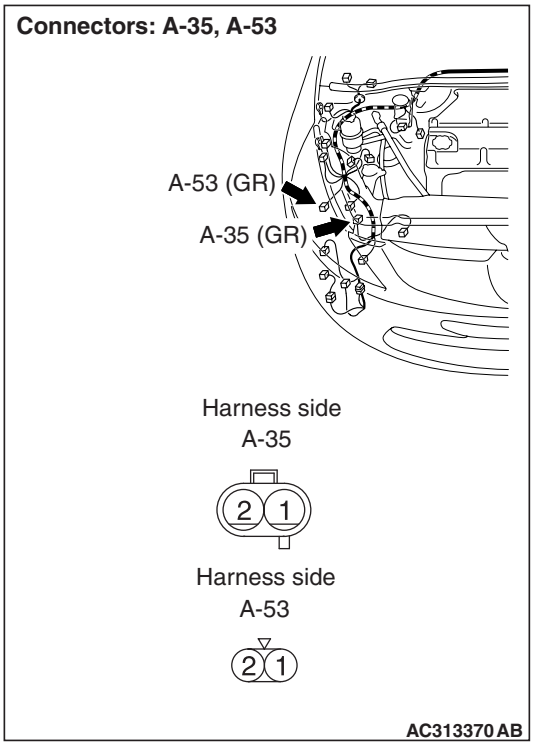


(1) Disconnect the connector, and measure at the wiring harness side.

(2) Check the resistance between the lamp connector and body earth.

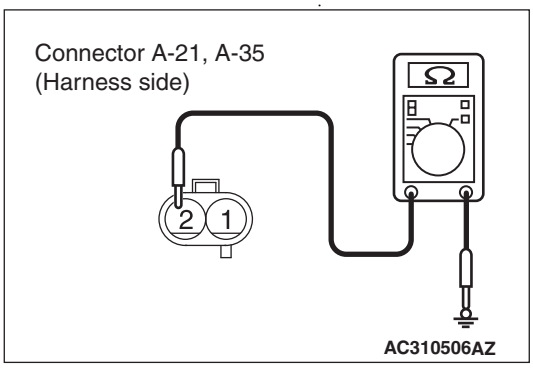


Resistance between A-35 headlamp (HI: RH) connector terminal No.2 and body earth

- Resistance between A-21 headlamp (HI: LH) connector terminal No.2 and body earth

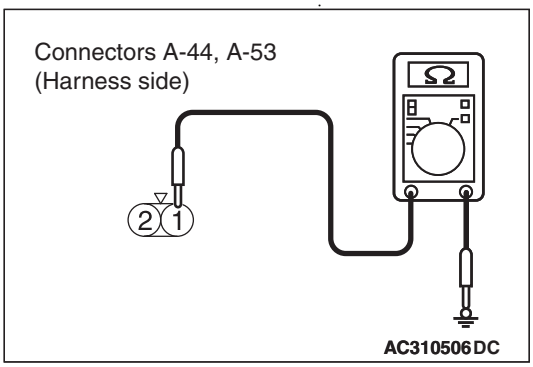


Resistance between A-53 discharge-ECU (RH) connector terminal No.1 and body earth

- Resistance between A-44 discharge-ECU (LH) connector terminal No.1 and body earth

**OK: 2 Ω or less**

**Q: Is the check result normal?**

**YES :** Go to Step 5.

**NO :** Go to Step 4.

Main Index
Group TOC

**Step 4. Check the wiring harness from A-35 headlamp (HI: RH) connector terminal No.2, A-21 headlamp (HI: LH) connector terminal No.2, A-44 discharge-ECU (LH) connector terminal No.1 or A-53 discharge-ECU (RH) connector terminal No.1 to body earth.**

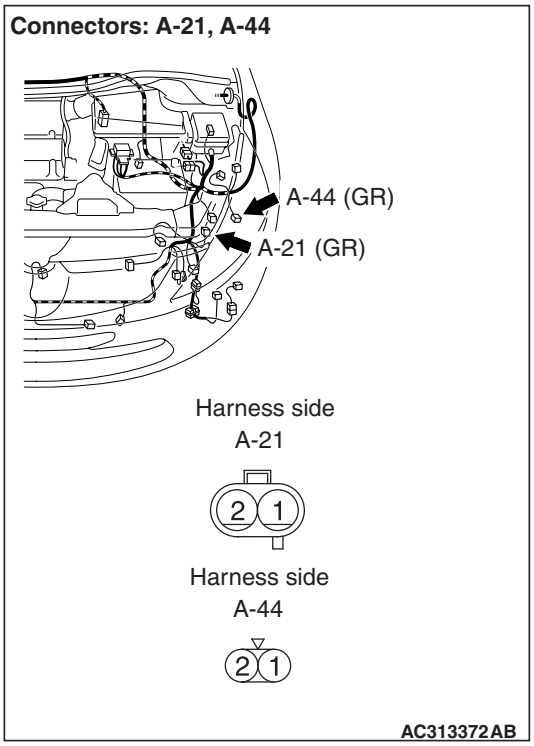


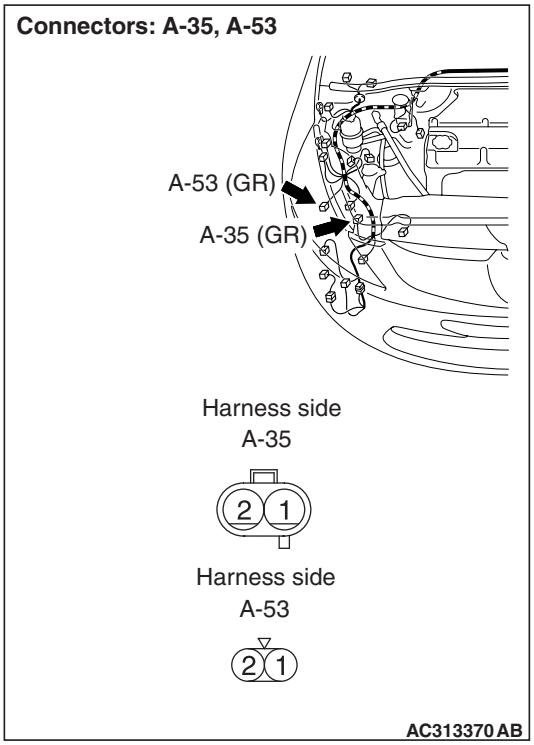


- Check the earth wires for open circuit.

**Q: Is the check result normal?**
**YES :** Go to Step 7.
**NO :** Repair the wiring harness.

**Step 5. Connector check: A-14X front-ECU connector.**

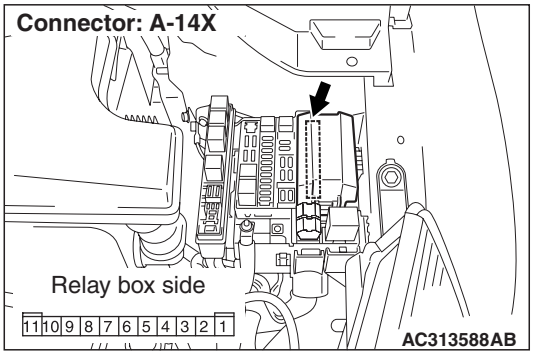


**Q: Is the check result normal?**
**YES :** Go to Step 6.
**NO :** Repair the defective connector.

Main Index
Group TOC

**Step 6. Check the wiring harness from A-35 headlamp (HI: RH) connector terminal No.1, A-21 headlamp (HI: LH) connector terminal No.1, A-53 discharge-ECU (RH) connector terminal No.2 or A-44 discharge-ECU (LH) connector terminal No.2 to A-14X front-ECU connector terminal Nos.2 (HI) or 6 (LO).**

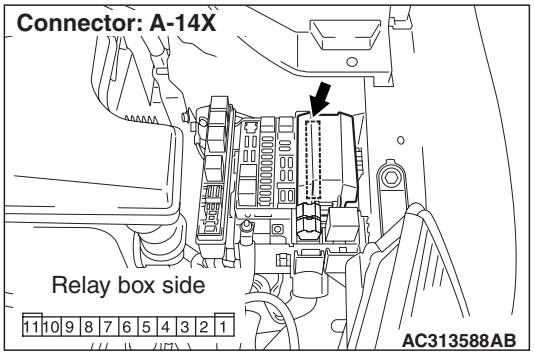


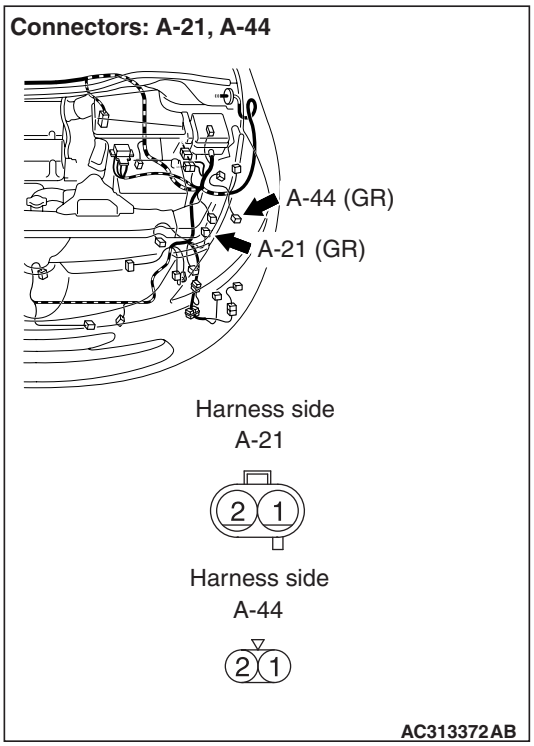


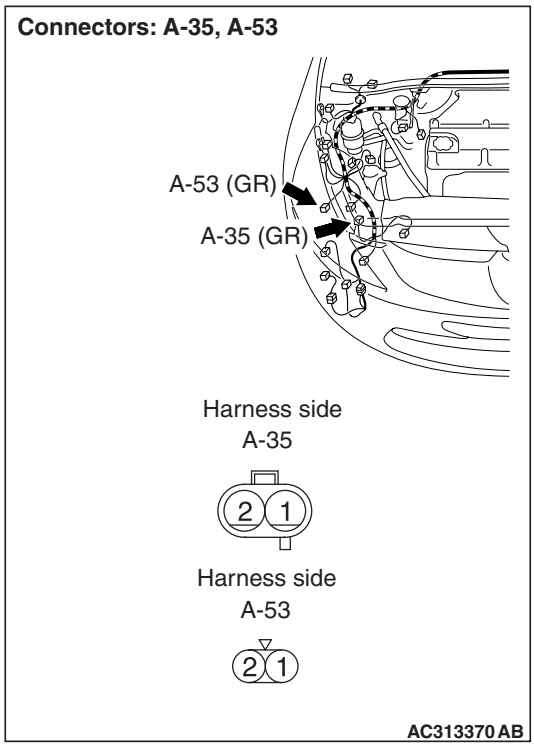


- Check the output lines for open circuit.

**Q: Is the check result normal?**
**YES :** Go to Step 7.
**NO :** Repair the wiring harness.

**Step 7. Retest the system.**
(1) Replace the socket of the defective headlamp.
(2) Check that the headlamps operate normally.

**Q: Is the check result normal?**
**YES :** The trouble can be an intermittent malfunction (Refer to GROUP 00 – How to Cope with Intermittent Malfunction P.00-5).
**NO :** Replace the headlamp assembly.

Main Index
Group TOC

## INSPECTION PROCEDURE K-11: The high-beam indicator lamp does not illuminate.

**⚠ CAUTION**
**Whenever the ECU is replaced, ensure that the input and output signal circuits are normal.**

**High-Beam Indicator Lamp Circuit**

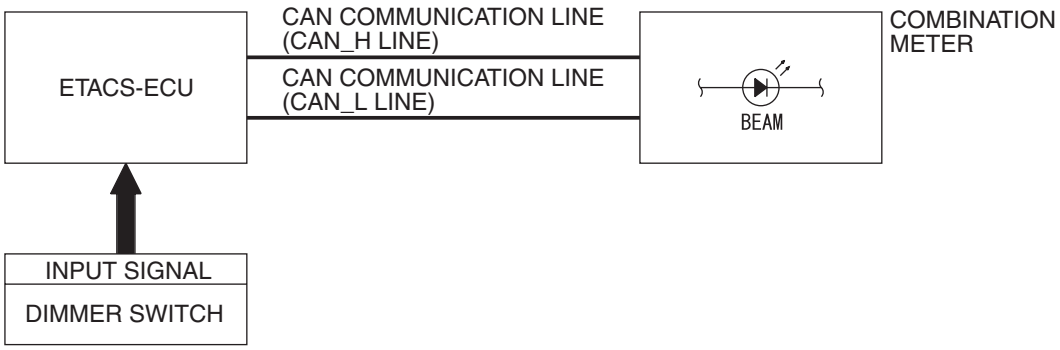


W4X54E031A

## COMMENTS ON TROUBLE SYMPTOM

If the high beam indicator does not illuminate normally, connector(s), wiring harness in the CAN bus lines, the ETACS-ECU or the combination meter may be defective.

## POSSIBLE CAUSES

- The combination meter may be defective
- The ETACS-ECU may be defective
- Damaged harness wires and connectors

## DIAGNOSIS PROCEDURE

**Step 1. Check the headlamps.**
When the lighting switch is operated, check that the headlamps illuminate/go off normally.

**Q: Are the headlamps in good condition?**
**YES :** Go to Step 2.
**NO :** First, repair the headlamps. Refer to Inspection Procedure K-3 "The high-beam headlamps do not illuminate normally P.54E-198."

**Step 2. M.U.T.-III CAN bus diagnostics.**
Use the M.U.T.-III to diagnose the CAN bus lines.

**Q: Is the check result normal?**
**YES :** Go to Step 3.
**NO :** Repair the CAN bus line (Refer to GROUP 54F, Diagnosis P.54F-13).

**Step 3. Check for combination meter diagnosis code.**
Check whether the combination meter-related diagnosis code is set.

**Q: Is the diagnosis code set?**
**YES :** Diagnose the combination meter (Refer to GROUP 54A – Troubleshooting P.54A-12).
**NO :** Go to Step 4.

**Step 4. ECU check by using the SWS monitor**
Check that the power supply and earth lines to the ETACS-ECU and the SWS communication lines are normal.

- Ignition switch: OFF

**ECU TO BE CHECKED**

- ETACS ECU

  **OK: "OK" is displayed on the "ETACS ECU" menu.**

**Q: Is the check result normal?**
**YES :** Go to Step 5.
**NO :** Refer to Inspection Procedure A-3 "Communication with the ETACS-ECU is not possible P.54E-55."

Main Index
Group TOC

**Step 5. M.U.T.-III actuator test**
Perform the actuator test for the combination meter, and check that the high-beam indicator illuminates (Refer to GROUP 54A – Combination Meter P.54A-95).

**Q: Is the check result normal?**
**YES :** Replace the ETACS-ECU.
**NO :** Replace the combination meter.

**INSPECTION PROCEDURE K-12: The headlamps do not illuminate when the lamping switch is at "TAIL" or "PASSING" position, but illuminate only at low beam when the switch is at "HEAD" position. However, the headlamps do not illuminate at high beam.**

**⚠ CAUTION**
**Whenever the ECU is replaced, ensure that the input and output signal circuits are normal.**

## COMMENTS ON TROUBLE SYMPTOM

If the headlamps illuminate only at low beam regardless of the lighting switch position, the headlamp fail-safe function may be activated.

## POSSIBLE CAUSES

- Malfunction of the column switch
- Malfunction of the front-ECU
- Damaged harness wires and connectors

## DIAGNOSIS PROCEDURE

**Step 1. ECU check by using the SWS monitor.**
Check that the power supply and earth lines to the column switch (column-ECU) and the front-ECU and the SWS communication lines are normal.
- Ignition switch: OFF

**ECUS TO BE CHECKED**
- COLUMN ECU
- FRONT ECU

**OK: "OK" are displayed for all the items**

**Q: Are the check result normal?**
**"OK" are displayed for all the items :** Go to Step 2.
**"NG" is displayed on the "COLUMN ECU" menu. :** Refer to Inspection Procedure A-2 "Communication with the column switch (column-ECU) is not possible P.54E-51."
**"NG" is displayed on the "FRONT ECU" menu. :** Refer to Inspection Procedure A-4 "Communication with the front-ECU is not possible P.54E-60."

**Step 2. Retest the system.**
Check that the headlamps illuminate normally.

**Q: Is the check result normal?**
**YES :** The trouble can be an intermittent malfunction (Refer to GROUP 00 – How to Cope with Intermittent Malfunction P.00-5).
**NO :** Replace the column switch.

Main Index
Group TOC

# FLASHER TIMER

## INSPECTION PROCEDURE L-1: The turn-signal lamps do not illuminate.

**⚠ CAUTION**

**Whenever the ECU is replaced, ensure that the input and output signal circuits are normal.**

**Turn-Signal Lamp Power Supply Circuit**

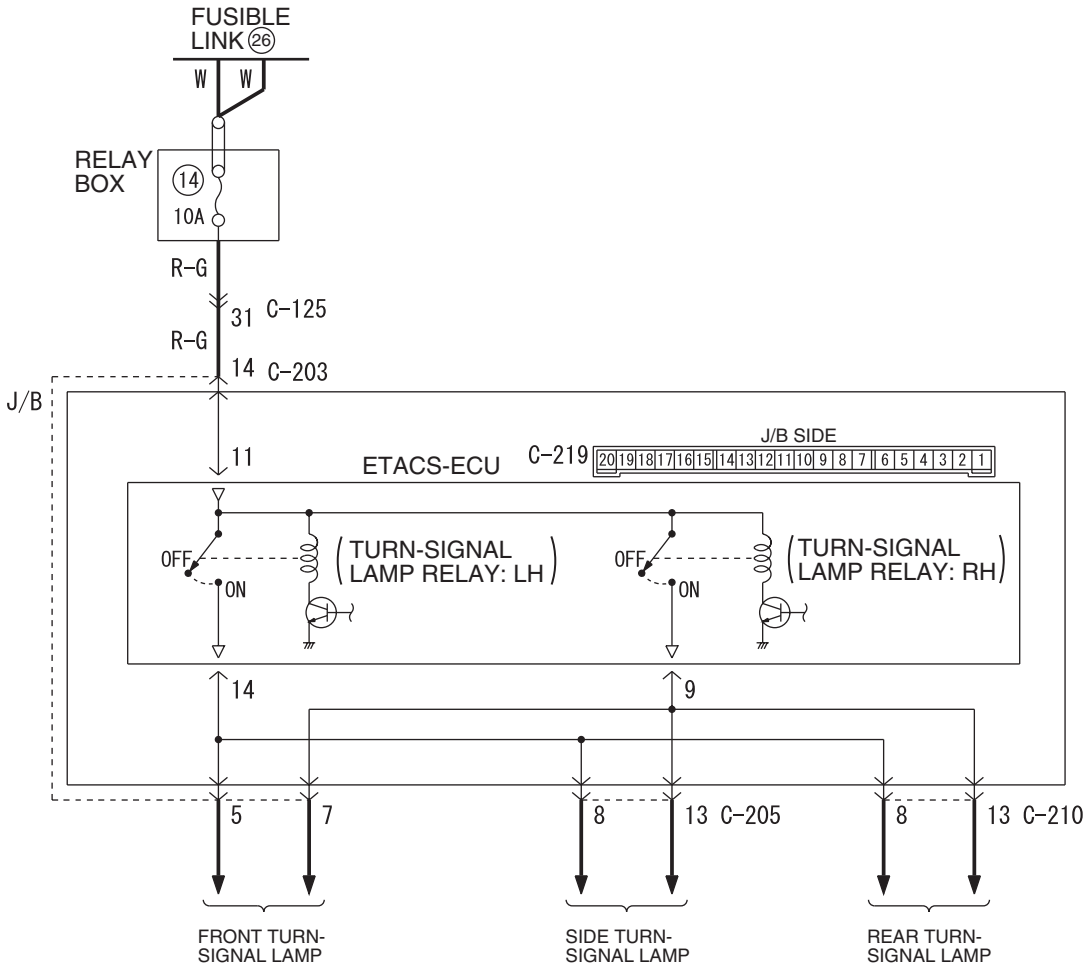


Wire colour code
B : Black LG : Light green G : Green L : Blue W : White Y : Yellow SB : Sky blue
BR : Brown O : Orange GR : Grey R : Red P : Pink V : Violet PU : Purple

W6X54X063A

## COMMENTS ON TROUBLE SYMPTOM

If all the turn-signal lamps do not illuminate, the ignition switch (IG1), the turn-signal lamp switch input circuit or the ETACS-ECU may be defective.

## POSSIBLE CAUSES

- Malfunction of the column switch
- Malfunction of the ETACS-ECU
- Damaged harness wires and connectors

Main Index
Group TOC

## DIAGNOSIS PROCEDURE

**Step 1. ECU check by using the SWS monitor.**
Check that the power supply and earth lines to the ETACS-ECU and the SWS communication lines are normal.
- Ignition switch: OFF

**ECU TO BE CHECKED**
- ETACS ECU

**OK: "OK" is displayed on the "ETACS ECU" menu.**

**Q: Is the check result normal?**
**YES :** Go to Step 2.
**NO :** Refer to Inspection Procedure A-3 "Communication with the ETACS-ECU is not possible P.54E-55."

**Step 2. Check that the hazard warning lamps operate.**
Check that the hazard warning lamps illuminate normally.

**Q: Is the check result normal?**
**YES :** Go to Step 6.
**NO :** Go to Step 3.

**Step 3. Connector check: C-219 ETACS-ECU connector.**

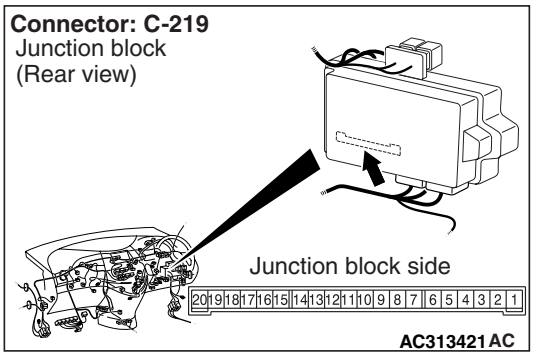


**Q: Is the check result normal?**
**YES :** Go to Step 4.
**NO :** Repair the defective connector.

**Step 4. Voltage measurement at the C-219 ETACS-ECU connector.**

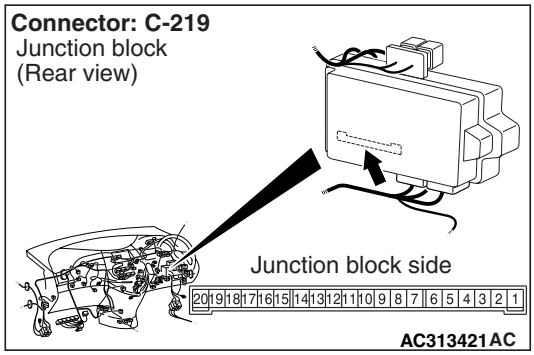


(1) Remove the ETACS-ECU, and measure at the junction block side.

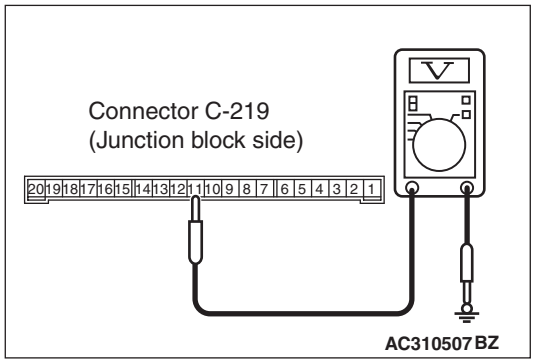


(2) Voltage between C-219 ETACS-ECU connector terminal No.11 and body earth

**OK: System voltage**

**Q: Is the check result normal?**
**YES :** Go to Step 8.
**NO :** Go to Step 5.

Main Index
Group TOC

**Step 5. Check the wiring harness between C-219 ETACS-ECU connector terminal No.11 to the fusible link (26).**

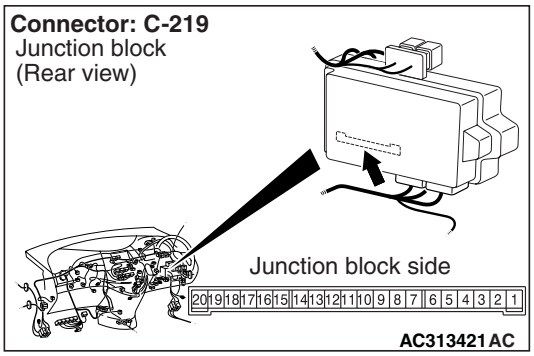


*NOTE:*

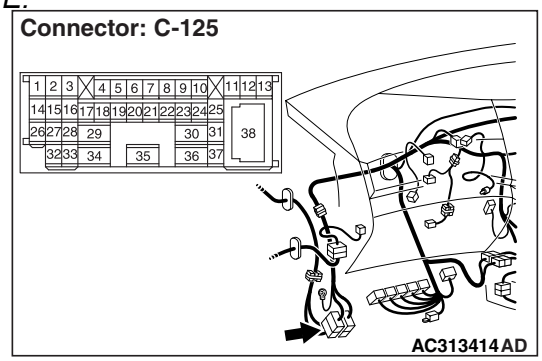


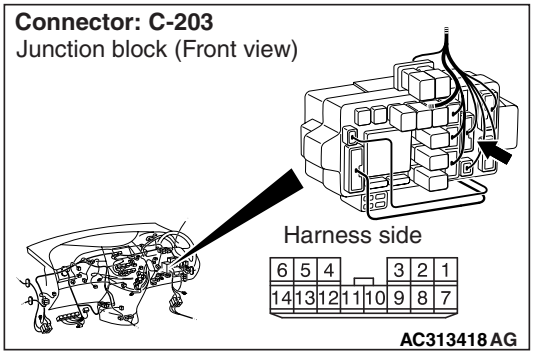


*Prior to the wiring harness inspection, check intermediate connector C-125 and junction block connector C-203, and repair if necessary.*

- Check the power supply line for open circuit.

**Q: Is the check result normal?**

**YES :** Go to Step 8.

**NO :** Repair the wiring harness.

**Step 6. Function diagnosis by using the SWS monitor.**

Check the SWS communication signal, which are related to the right turn-signal lamps.

**<Selected item> TURN SIGNAL - TURN-SIG. RH**

- Turn-signal lamp switch: RH
- Ignition switch: ON

| Item No. | Item name | Normal condition |
|---|---|---|
| Item 10 | TURN SIG.RH | ON |
| Item 11 | TURN SIG.LH | OFF |
| Item 30 | IG SW(IG1) | ON |

**OK: Normal conditions are displayed for all the items**

**Q: Is the check result normal?**

**Normal conditions are displayed for all the items. :** Go to Step 7.

**Normal condition is not displayed for item 10 or 11. :** Refer to inspection procedure P-5 "Column switch (lighting and turn-signal lamp switch) signal is not received P.54E-300."

**Normal condition is not displayed for item No.30. :** Refer to inspection procedure P-2 "The ignition switch (IG1) signal is not received P.54E-293."

**Step 7. SWS monitor data list.**

Check the SWS communication signal, which are related to the left turn-signal lamps.

**<Selected item> TURN SIGNAL - TURN-SIG. LH**

- Turn-signal lamp switch: LH
- Ignition switch: ON

| Item No. | Item name | Normal condition |
|---|---|---|
| Item 10 | TURN SIG.RH | OFF |
| Item 11 | TURN SIG.LH | ON |

**OK: Normal conditions are displayed for all the items.**

**Q: Is the check result normal?**

**Normal conditions are displayed for all the items. :** Go to Step 8.

**Normal condition is not displayed for item 10 or 11. :** Refer to inspection procedure P-5 "Column switch (lighting and turn-signal lamp switch) signal is not received P.54E-300."

Main Index
Group TOC

**Step 8. Retest the system.**
Check that the turn-signal lamps illuminate.

**Q: Is the check result normal?**
**YES :** The trouble can be an intermittent malfunction (Refer to GROUP 00 – How to Cope with Intermittent Malfunction P.00-5).
**NO :** Replace the ETACS-ECU.

## INSPECTION PROCEDURE L-2: The hazard warning lamps do not illuminate.

**⚠ CAUTION**
**Whenever the ECU is replaced, ensure that the input and output signal circuits are normal.**

**Hazard Warning Lamp Circuit**

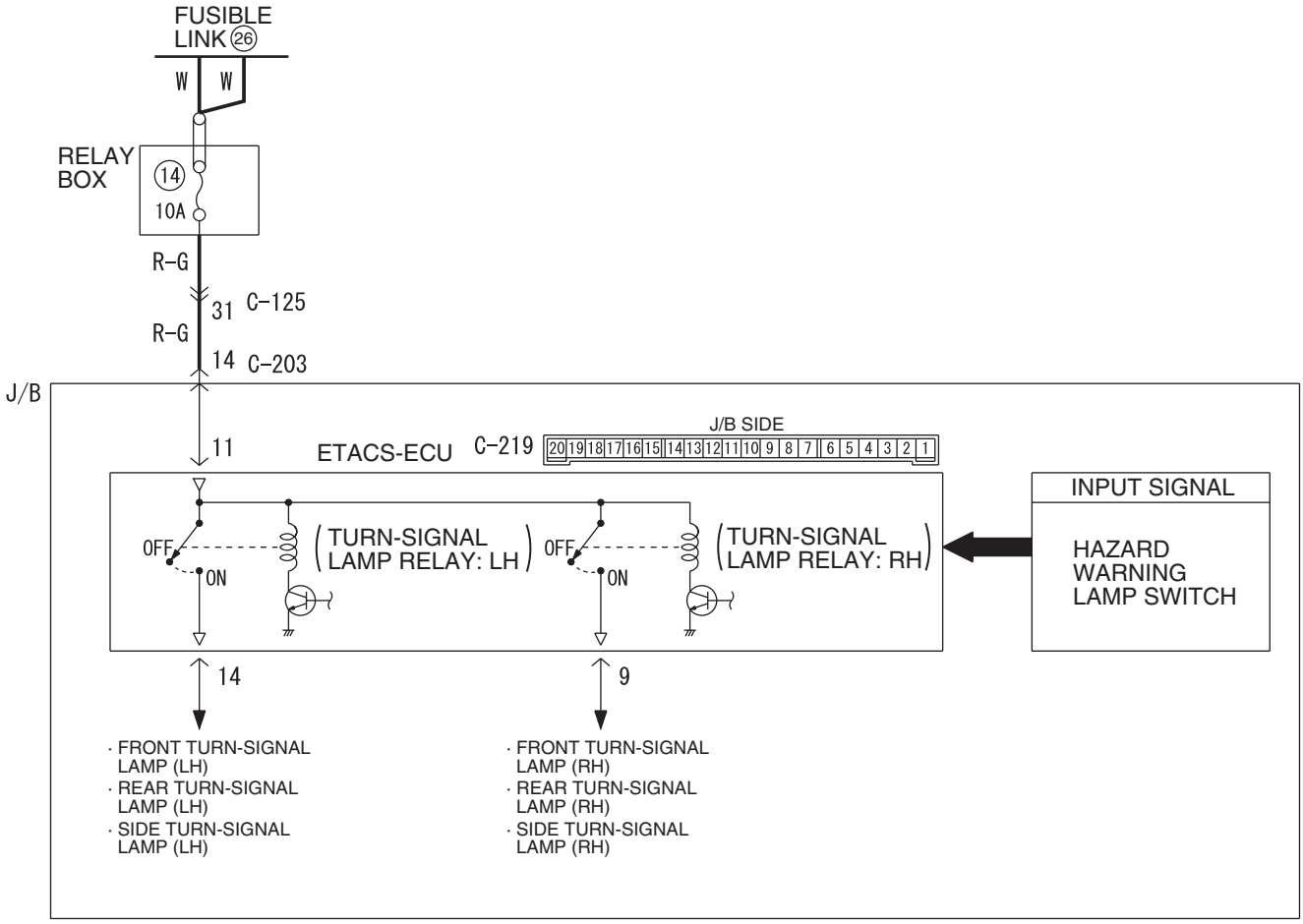


Wire colour code
B : Black LG : Light green G : Green L : Blue W : White Y : Yellow SB : Sky blue
BR : Brown O : Orange GR : Gray R : Red P : Pink V : Violet

W4X54E093A

## COMMENTS ON TROUBLE SYMPTOM

If the hazard warning lamps do not illuminate, the hazard warning lamp input signal circuit or the ETACS-ECU may be defective.

Main Index
Group TOC

## POSSIBLE CAUSES

- Malfunction of the hazard warning lamp switch
- Malfunction of the ETACS-ECU
- Damaged harness wires and connectors

## DIAGNOSIS PROCEDURE

**Step 1. Check that the turn-signal lamps operate.**
Check that the turn-signal lamps illuminate normally.

**Q: Is the check result normal?**
**YES :** Go to Step 2.
**NO :** Refer to inspection procedure L-1 "The turn-signal lamps do not illuminate P.54E-223."

**Step 2. ETACS switch data by using the SWS monitor.**
Check the ETACS-ECU signals which are related to the hazard warning lights.

- Hazard lamp switch: ON

| Item No. | Item name | Normal condition |
|---|---|---|
| Item 4 | Hazard lamp switch | ON (only when switch is operated) |

**OK: Normal condition is displayed.**

**Q: Is the check result normal?**
**YES :** Go to Step 3.
**NO :** Refer to inspection procedure P-11 "The hazard warning lamp switch signal is not received P.54E-313."

**Step 3. Retest the system.**
Check that the hazard warning lamps illuminate.

**Q: Is the check result normal?**
**YES :** The trouble can be an intermittent malfunction (Refer to GROUP 00 – How to Cope with Intermittent Malfunction P.00-5).
**NO :** Replace the ETACS-ECU.

Main Index
Group TOC

## INSPECTION PROCEDURE L-3: Any of the turn-signal lamps does not illuminate.

**⚠ CAUTION**

**Whenever the ECU is replaced, ensure that the input and output signal circuits are normal.**

**Left Turn-Signal Lamps Circuit**

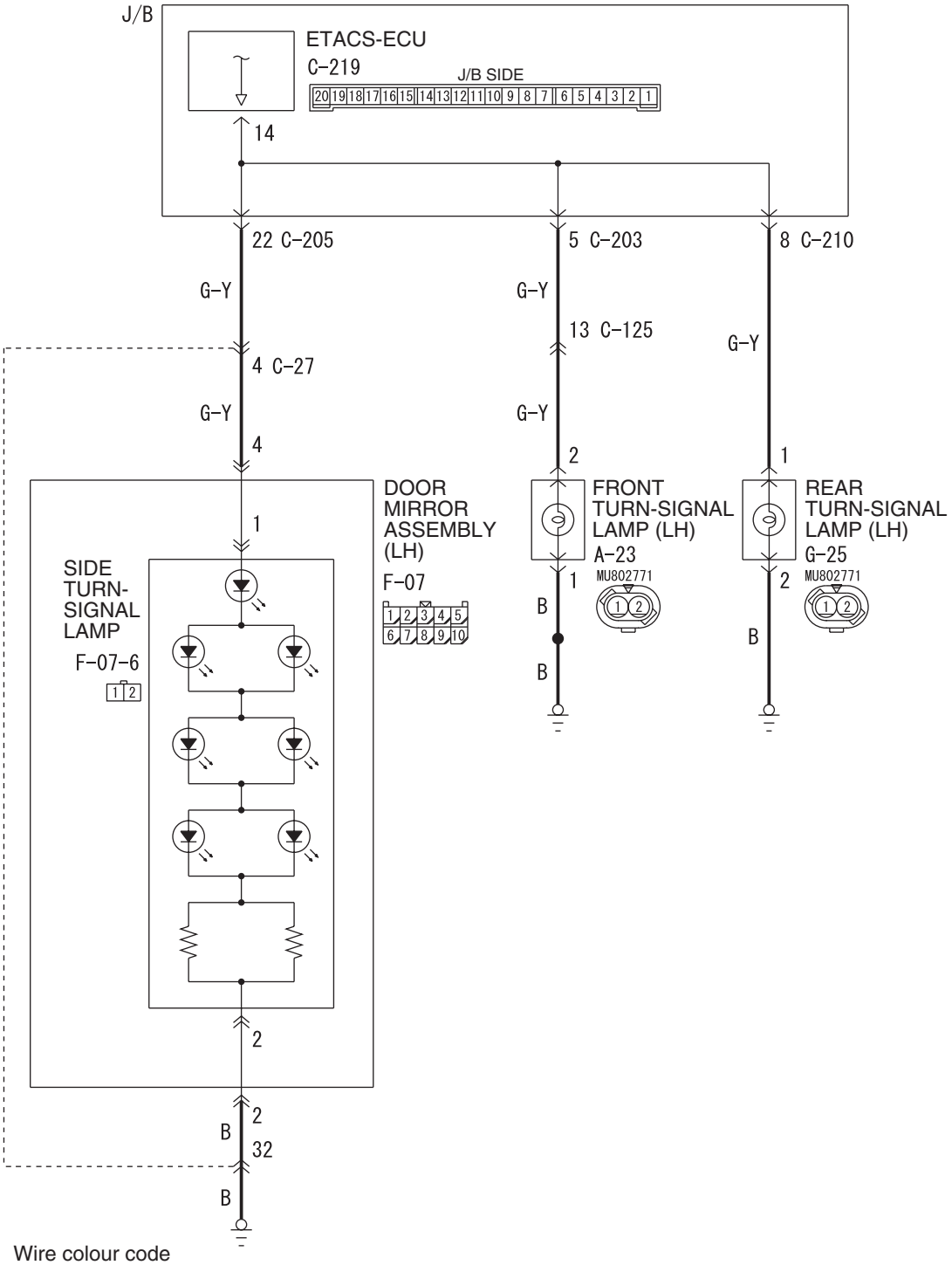


Wire colour code
B : Black LG : Light green G : Green L : Blue W : White Y : Yellow SB : Sky blue
BR : Brown O : Orange GR : Grey R : Red P : Pink V : Violet PU : Purple

W6X54X064A

Main Index
Group TOC

**Right Turn-Signal Lamps Circuit**

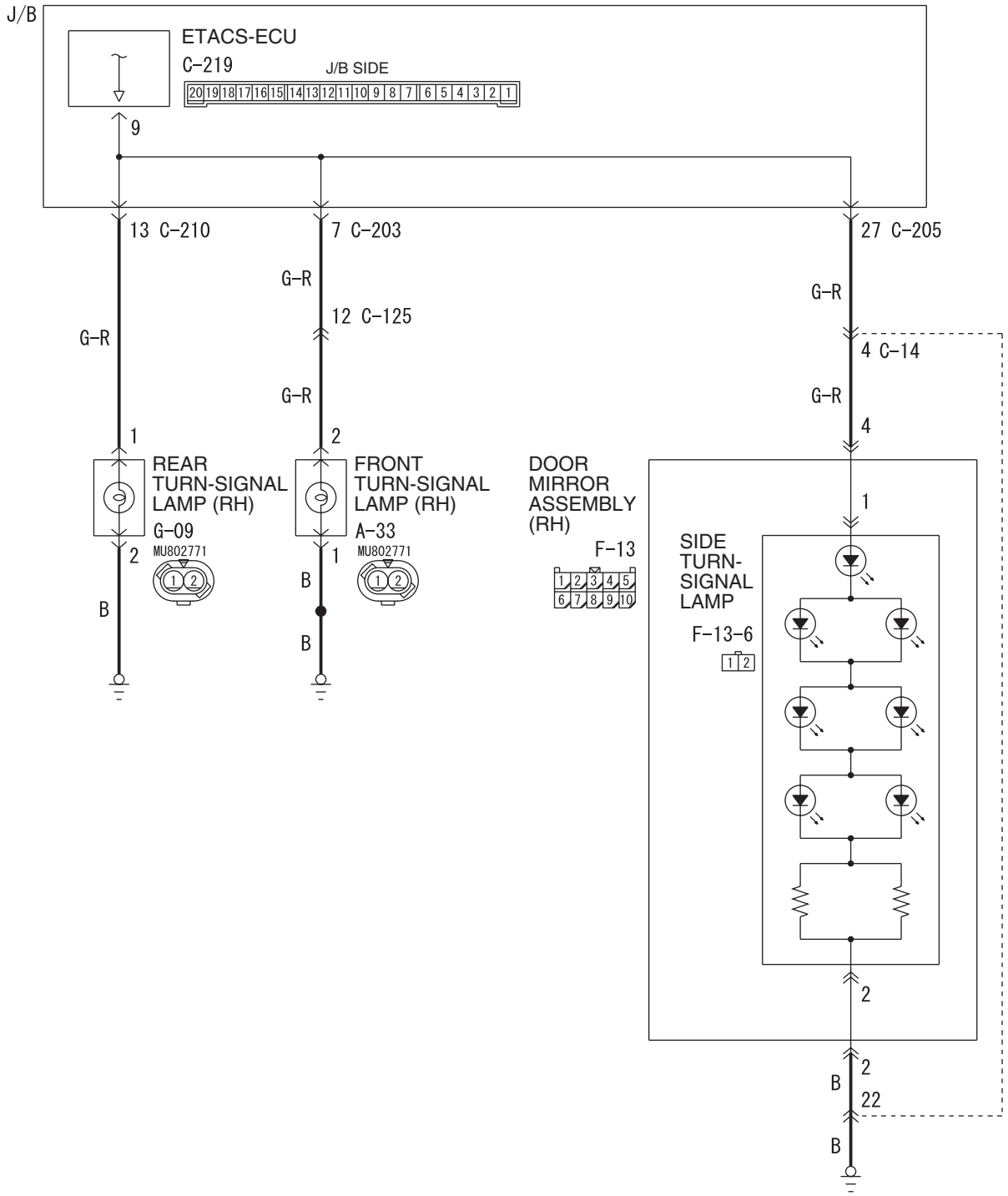


Wire colour code
B : Black LG : Light green G : Green L : Blue W : White Y : Yellow SB : Sky blue
BR : Brown O : Orange GR : Grey R : Red P : Pink V : Violet PU : Purple

W6X54X065A

## COMMENTS ON TROUBLE SYMPTOM

If any of the turn-signal lamp does not illuminate normally, wiring harness connector(s) or the bulb may be defective.

## PROBABLE CAUSES

- Defective front turn-signal lamp bulb
- Defective side turn-signal lamp
- Defective rear turn-signal lamp bulb
- Damaged harness wires and connectors

Main Index
Group TOC

## DIAGNOSIS PROCEDURE

### Step 1. Confirm which turn-signal lamp is defective.

**Q: Which turn-signal lamp fails to illuminate correctly?**
**Front turn-signal lamp :** Go to Step 2.
**Side turn-signal lamp :** Go to Step 6.
**Rear turn-signal lamp :** Go to Step 11.

### Step 2. Connector check: A-33 front turn-signal lamp (RH) or A-23 front turn-signal lamp (LH) connector.

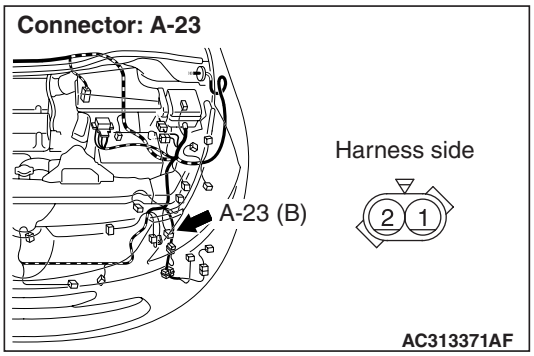


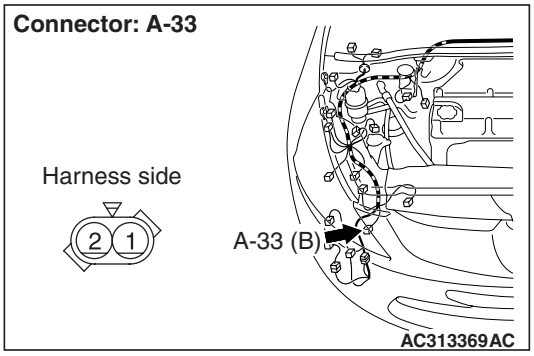


**Q: Is the check result normal?**
**YES :** Go to Step 3.
**NO :** Repair the defective connector.

### Step 3. Check the bulb(s) of the turn-signal lamps.

Check the bulb(s) of the defective lamp.

**Q: Is the check result normal?**
**YES :** Go to Step 4.
**NO :** Replace the bulb(s) of the defective lamp.

### Step 4. Resistance measurement at the A-33 front turn-signal lamp (RH) or A-23 front turn-signal lamp (LH) connector.

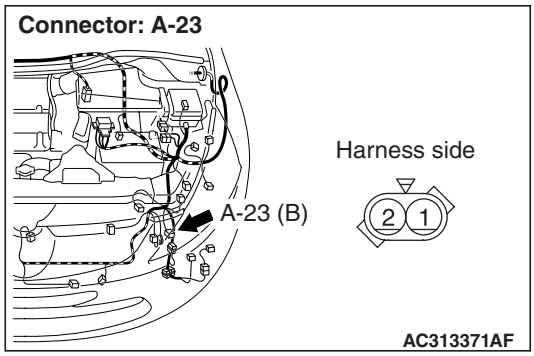


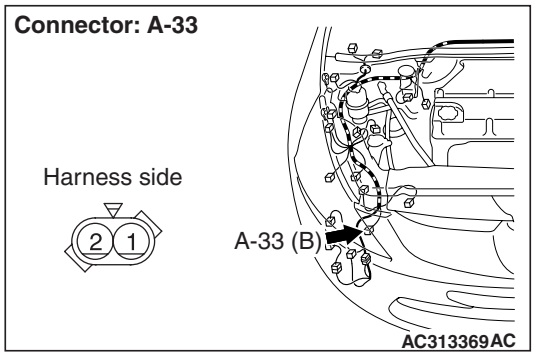


(1) Disconnect the connector, and measure at the wiring harness side.
(2) Measure the resistance between the defective lamp connector terminal and body earth.

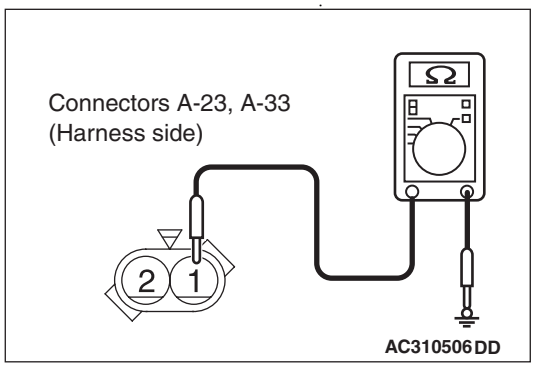


Resistance between A-33 front turn-signal lamp (RH) connector terminal No.1 and body earth
- Resistance between A-23 front turn-signal lamp (LH) connector terminal No.1 and body earth

**OK: 2 Ω or less**

**Q: Is the check result normal?**
**YES :** Go to Step 15.
**NO :** Go to Step 5.

Main Index
Group TOC

**Step 5. Check the wiring harness from A-33 front turn-signal lamp (RH) connector terminal No.1 and A-23 front turn-signal lamp (LH) connector terminal No.1 to body earth.**

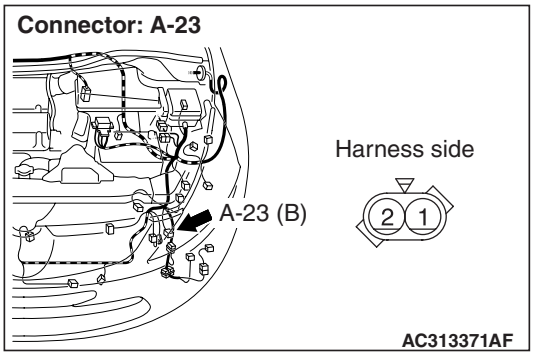


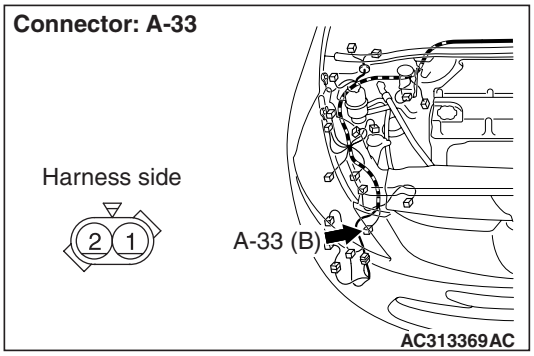


- Check the earth wires for open circuit.

**Q: Is the check result normal?**
**YES :** The trouble can be an intermittent malfunction (Refer to GROUP 00 – How to Cope with Intermittent Malfunction P.00-5).
**NO :** Repair the wiring harness.

**Step 6. Connector check: F-13-6 side turn-signal lamp (RH) or F-07-6 side turn-signal lamp (LH) connector.**

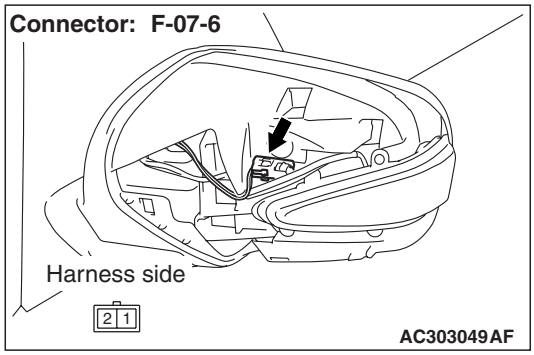


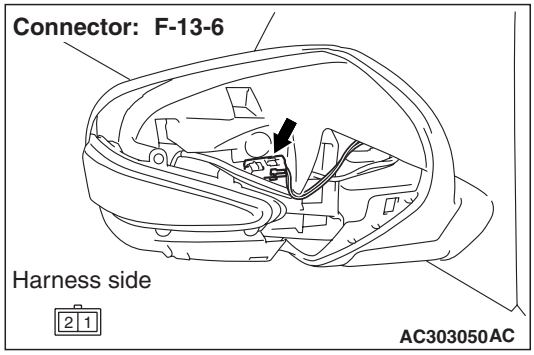


**Q: Is the check result normal?**
**YES :** Go to Step 7.
**NO :** Repair the defective connector.

Main Index
Group TOC

**Step 7. Resistance measurement at the F-13-6 side turn-signal lamp (RH) or F-07-6 side turn-signal lamp (LH) connector.**

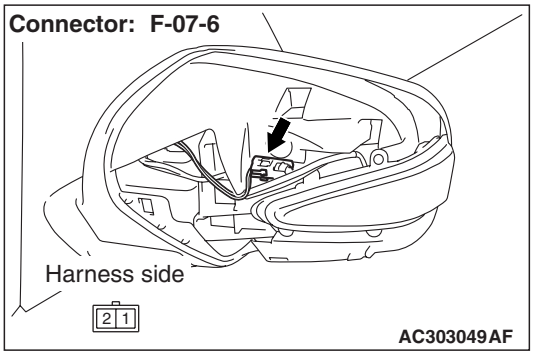


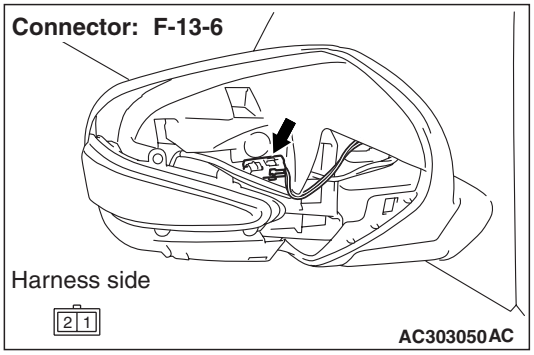


(1) Disconnect the connector, and measure at the wiring harness side.
(2) Measure the resistance between the defective lamp connector terminal and body earth.

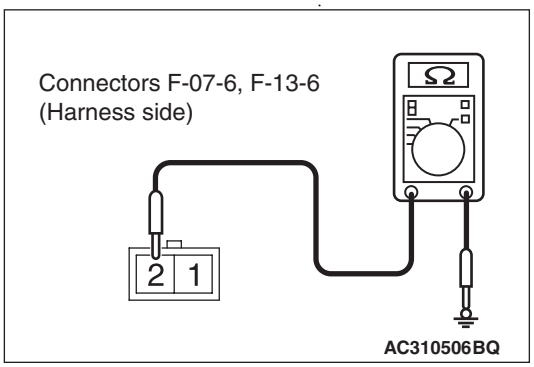


Resistance between F-13-6 side turn-signal lamp (RH) connector terminal No.2 and body earth

- Resistance between F-07-6 side turn-signal lamp (LH) connector terminal No.2 and body earth

**OK: 2 Ω or less**

**Q: Is the check result normal?**
**YES :** Go to Step 18.
**NO :** Go to Step 8.

**Step 8. Connector check: F-13 door mirror assembly (RH) or F-07 door mirror assembly (LH) connector.**

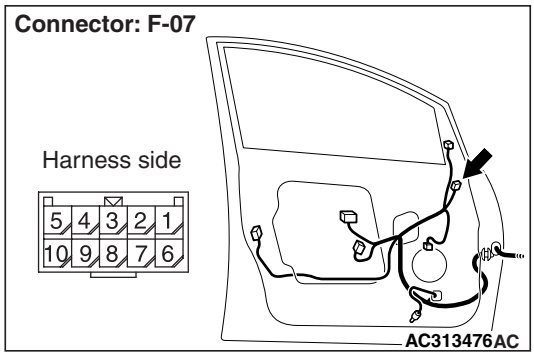


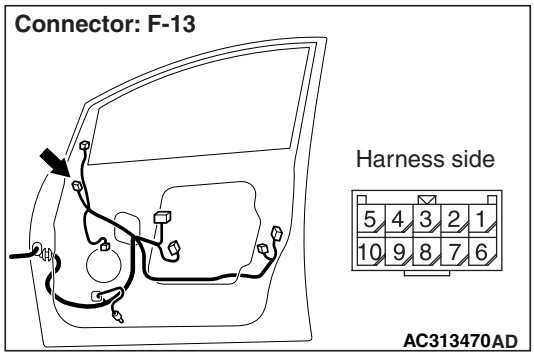


**Q: Is the check result normal?**
**YES :** Go to Step 9.
**NO :** Repair the defective connector.

Main Index
Group TOC

**Step 9. Resistance measurement at the F-13 door mirror assembly (RH) or F-07 door mirror assembly (LH) connector.**

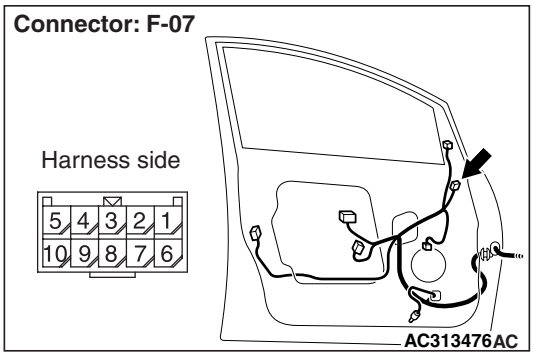


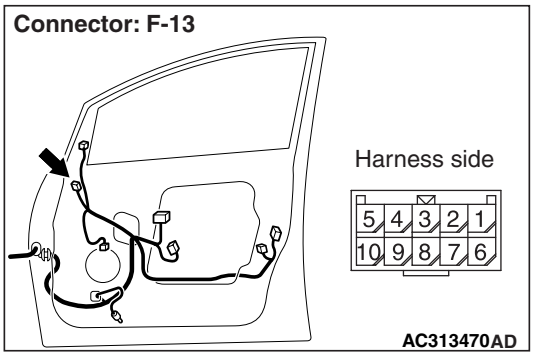


(1) Disconnect the connector, and measure at the wiring harness side.

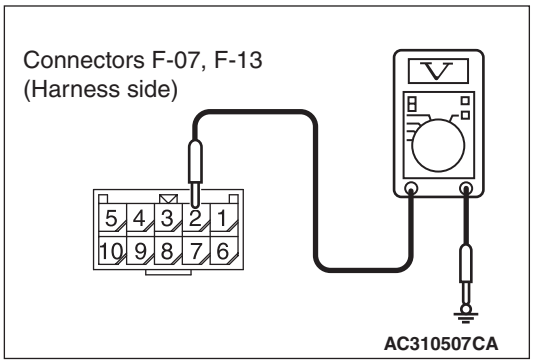


(2) Measure the resistance between the defective lamp connector terminal and body earth.
- Resistance between F-13 door mirror assembly (RH) connector terminal No.2 and body earth
- Resistance between F-07 door mirror assembly (LH) connector terminal No.2 and body earth

**OK: 2 Ω or less**

**Q: Is the check result normal?**

**YES :** Repair the wiring harness in the door mirror assembly.

**NO :** Go to Step 10.

**Step 10. Check the wiring harness from F-13 door mirror assembly (RH) or F-07 door mirror assembly (LH) connector terminal No.2 to body earth.**

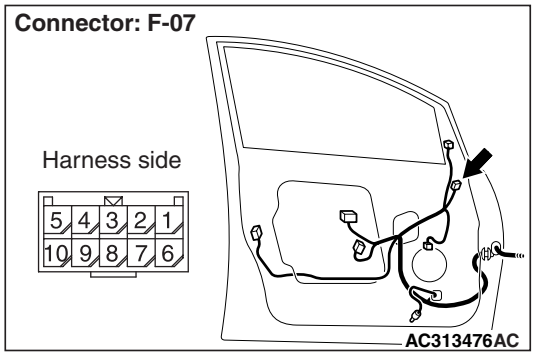


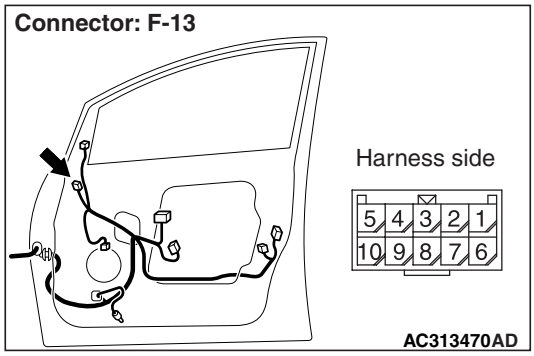


*NOTE: Prior to the wiring harness inspection, check intermediate connector C-14 <RH>, C-27 <LH>, and repair if necessary.*

- Check the earth wires for open circuit.

**Q: Is the check result normal?**

**YES :** The trouble can be an intermittent malfunction (Refer to GROUP 00 – How to Cope with Intermittent Malfunction P.00-5).

**NO :** Repair the wiring harness.

Main Index
Group TOC

**Step 11. Connector check: G-09 rear turn-signal lamp (RH) or G-25 rear turn-signal lamp (LH) connector.**

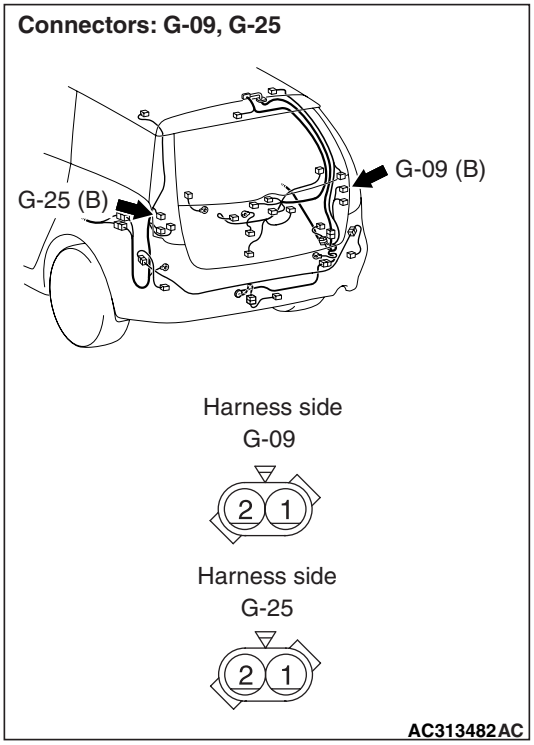


**Q: Is the check result normal?**
**YES :** Go to Step 12.
**NO :** Repair the defective connector.

**Step 12. Check the bulb(s) of the turn-signal lamps.**
Check the bulb(s) of the defective lamp.

**Q: Is the check result normal?**
**YES :** Go to Step 13.
**NO :** Replace the bulb(s) of the defective lamp.

**Step 13. Resistance measurement at the G-09 rear turn-signal lamp (RH) or G-25 rear turn-signal lamp (LH) connector.**

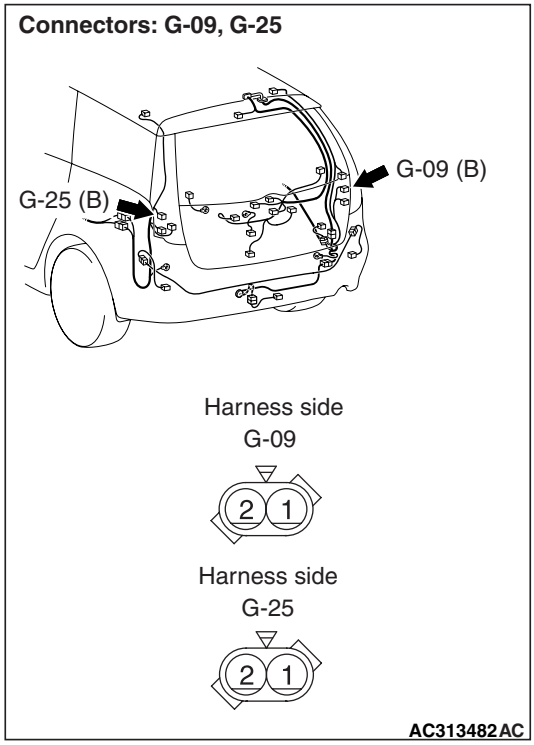


(1) Disconnect the connector, and measure at the wiring harness side.

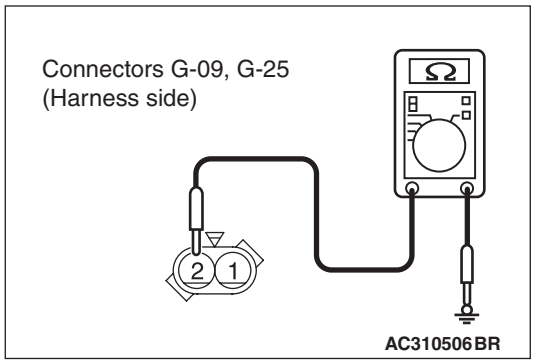


(2) Measure the resistance between the defective lamp connector terminal and body earth.
- Resistance between G-09 rear turn-signal lamp (RH) connector terminal No.2 and body earth
- Resistance between G-25 rear turn-signal lamp (LH) connector terminal No.2 and body earth

**OK: 2 Ω or less**

**Q: Is the check result normal?**
**YES :** Go to Step 22.
**NO :** Go to Step 14.

**Step 14. Check the wiring harness from G-09 rear turn-signal lamp (RH) or G-25 rear turn-signal lamp (LH) connector terminal No.2 to body earth.**

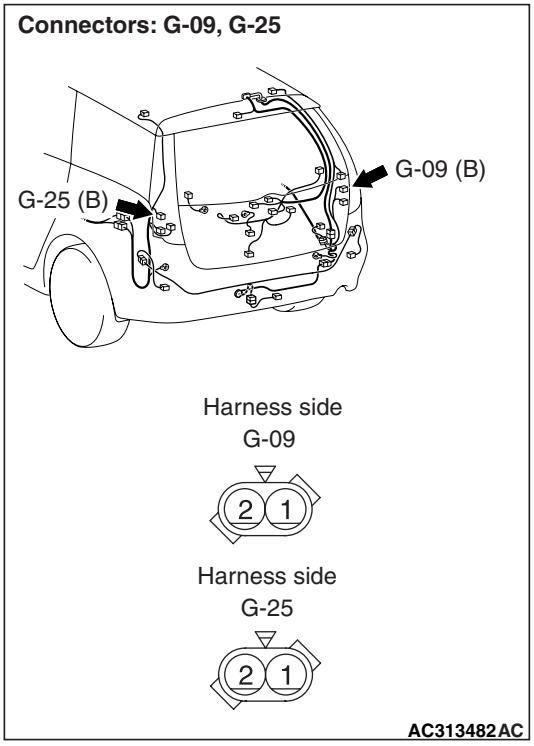


- Check the earth wires for open circuit.

**Q: Is the check result normal?**
**YES :** The trouble can be an intermittent malfunction (Refer to GROUP 00 – How to Cope with Intermittent Malfunction P.00-5).
**NO :** Repair the wiring harness.

**Step 15. Connector check: C-219 ETACS-ECU connector**

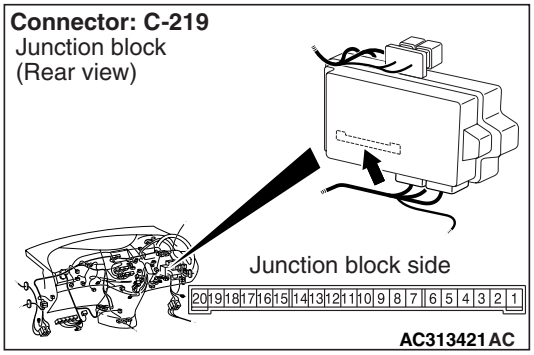


**Q: Is the check result normal?**
**YES :** Go to Step 16.
**NO :** Repair the defective connector.

**Step 16. Check the wiring harness from the A-33 front turn-signal lamp (RH) connector terminal No.2 to C-219 ETACS-ECU connector terminal No.9 or A-23 front turn-signal lamp (LH) connector terminal No.2 to C-219 ETACS-ECU connector terminal No.14.**

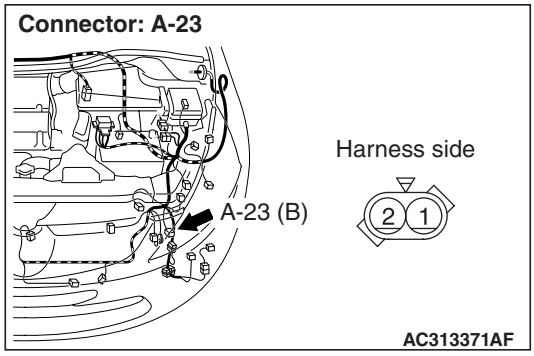


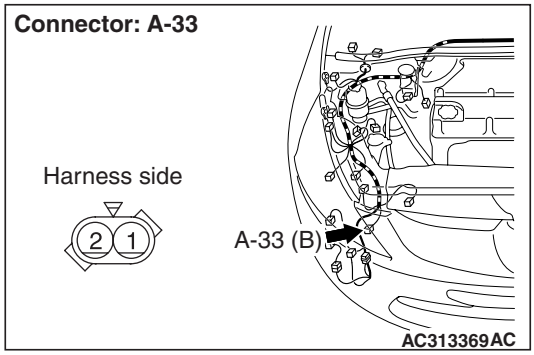


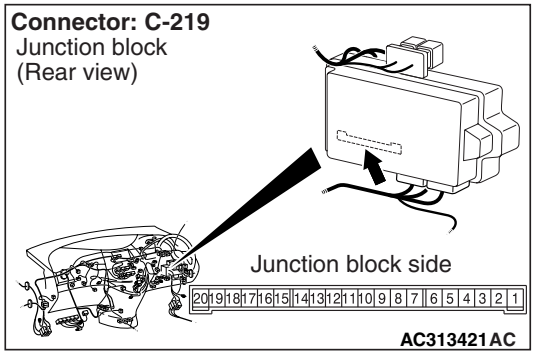


**Step 17. Retest the system.**
Check that the turn-signal lamps illuminate normally.

**Q: Is the check result normal?**
**YES :** The trouble can be an intermittent malfunction (Refer to GROUP 00 – How to Cope with Intermittent Malfunction P.00-5).
**NO : .** Replace the headlamp assembly.

Main Index
Group TOC

**Step 18. Connector check: C-219 ETACS-ECU connector.**

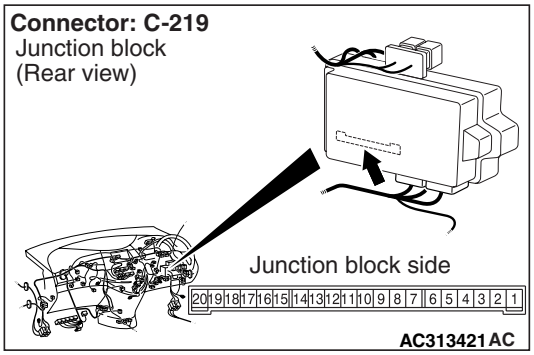


**Q: Is the check result normal?**

**YES :** Go to Step 19.

**NO :** Repair the defective connector.

**Step 19. Connector check: F-13-6 side turn-signal lamp (RH) and F-13 door mirror assembly (RH) or F-07-6 side turn-signal lamp (LH) connector and F-07 door mirror assembly (LH) connector.**

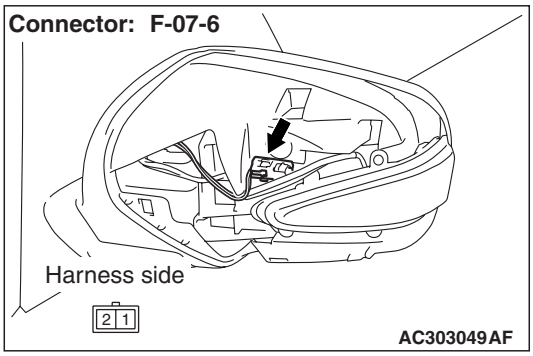


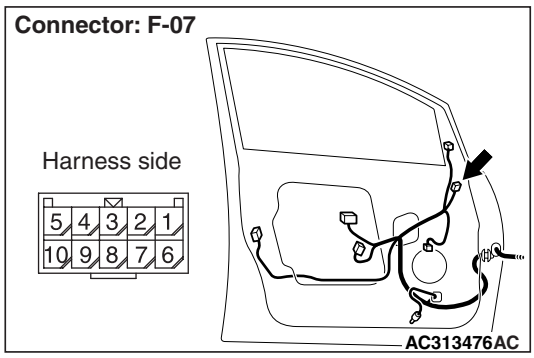


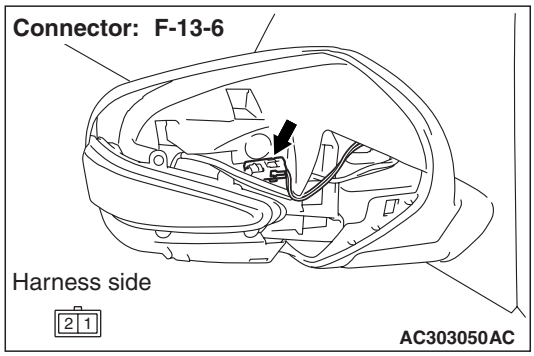


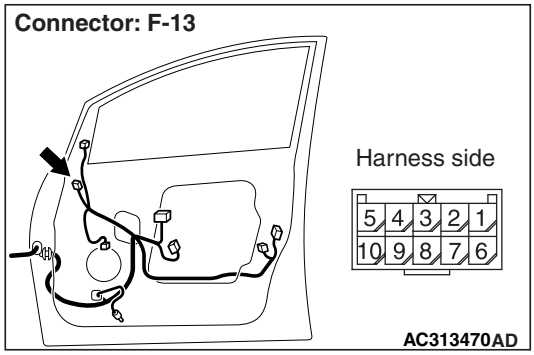


**Q: Is the check result normal?**

**YES :** Go to Step 20.

**NO :** Repair the defective connector.

Main Index
Group TOC

**Step 20. Check the wiring harness from the F-13-6 side turn-signal lamp (RH) connector terminal No.1 to C-219 ETACS-ECU connector terminal No.9 or F-07-6 side turn-signal lamp (LH) connector terminal No.1 to C-219 ETACS-ECU connector terminal No.14.**

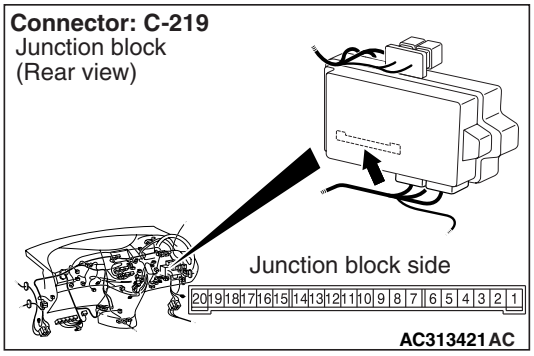


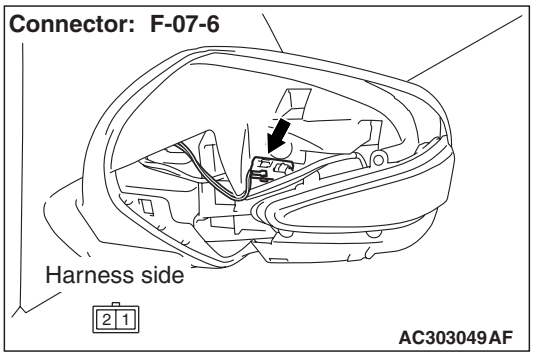


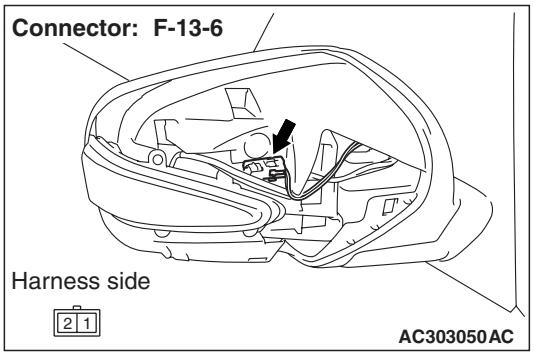


*NOTE:*

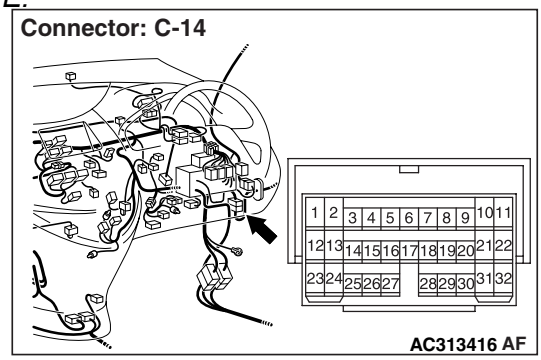


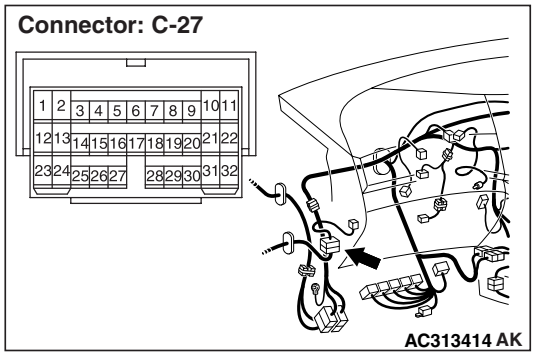


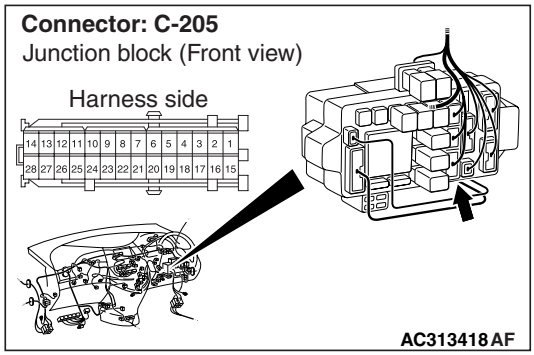


*Prior to the wiring harness inspection, check intermediate connector C-14 <RH>, C-27 <LH> and junction block connector C-205, and repair if necessary.*

- Check the output lines for open circuit.

**Q: Is the check result normal?**
**YES :** Go to Step 21.
**NO :** Repair the wiring harness.

**Step 21. Retest the system.**

Check that the side turn-signal lamps illuminate normally.

**Q: Is the check result normal?**
**YES :** The trouble can be an intermittent malfunction (Refer to GROUP 00 – How to Cope with Intermittent Malfunction P.00-5).
**NO :** Replace the side turn-signal lamp.

Main Index
Group TOC

**Step 22. Connector check: C-219 ETACS-ECU connector.**

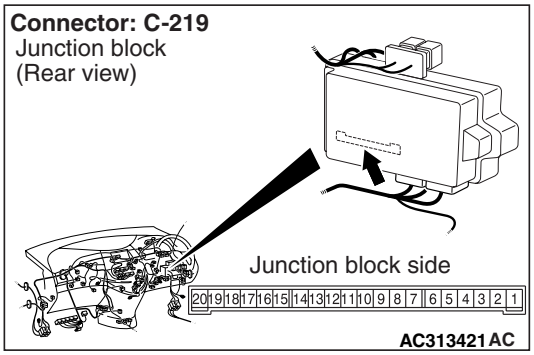


**Q: Is the check result normal?**

**YES :** Go to Step 23.

**NO :** Repair the defective connector.

**Step 23. Check the wiring harness from the G-09 rear turn-signal lamp (RH) connector terminal No.1 to C-219 ETACS-ECU connector terminal No.9 or G-25 rear turn-signal lamp (LH) connector terminal No.1 to C-219 ETACS-ECU connector terminal or No.14.**

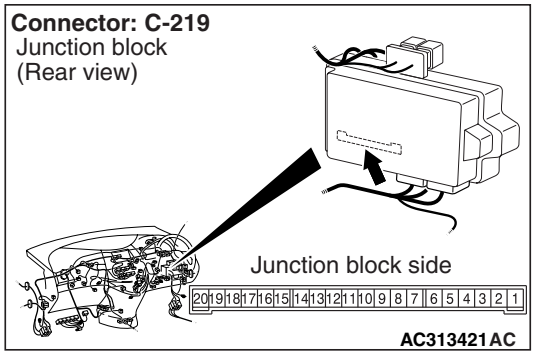


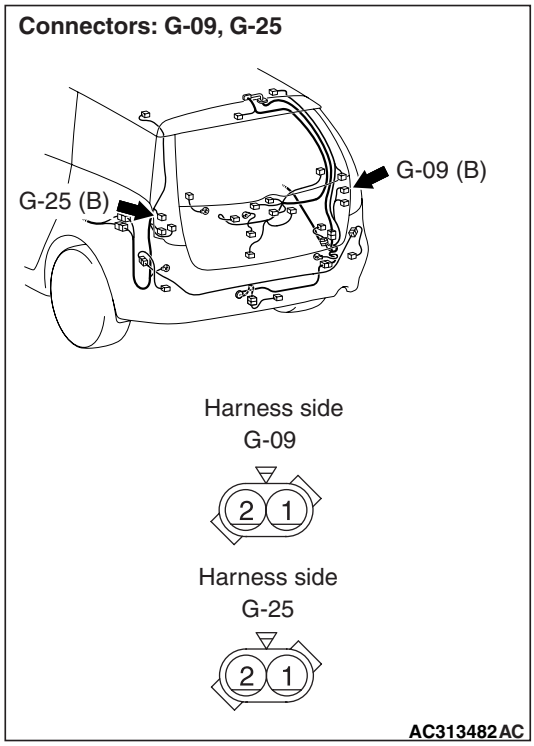

Main Index
Group TOC

*NOTE:*

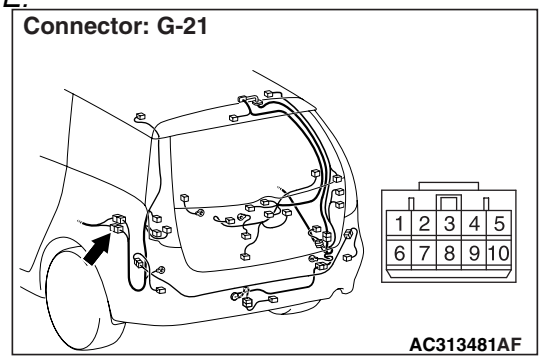


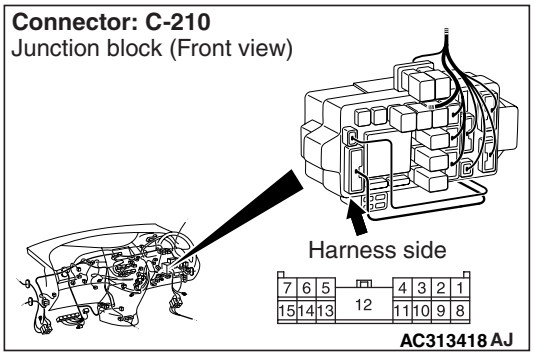


*Prior to the wiring harness inspection, check intermediate connector G-21 and junction block connector C-210, and repair if necessary.*

- Check the output lines for open circuit.

**Q: Is the check result normal?**

**YES :** Go to Step 24.

**NO :** Repair the wiring harness.

**Step 24. Retest the system.**

Check that the turn-signal lamps.

**Q: Is the check result normal?**

**YES :** The trouble can be an intermittent malfunction (Refer to GROUP 00 – How to Cope with Intermittent Malfunction P.00-5).

**NO :** Replace the rear turn-signal lamp assembly.

Main Index
Group TOC

## INSPECTION PROCEDURE L-4: The turn-signal indicator lamp does not illuminate.

**⚠ CAUTION**
**Whenever the ECU is replaced, ensure that the input and output signal circuits are normal.**

**Turn-Signal Indicator Lamp Circuit**

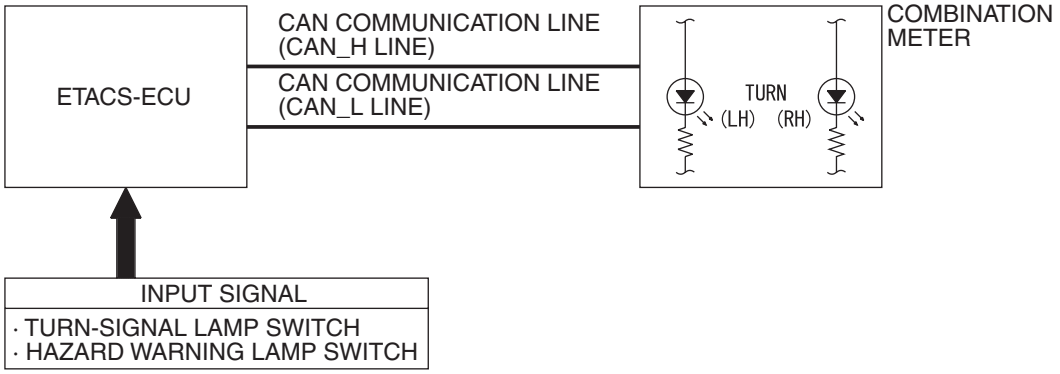


W4X54E190A

## COMMENTS ON TROUBLE SYMPTOM

If the turn-signal indicator lamp does not illuminate normally, connector(s), wiring harness in the CAN bus lines, the ETACS-ECU or the combination meter may be defective.

## POSSIBLE CAUSES

- The combination meter may be defective
- The ETACS-ECU may be defective
- Damaged harness wires and connectors

## DIAGNOSIS PROCEDURE

**Step 1. Check that the hazard warning lamps operate.**
Check that the hazard warning lamps illuminate normally.

**Q: Is the check result normal?**
**YES :** Go to Step 2.
**NO :** First, repair the headlamps. Refer to Inspection Procedure L-2 "The hazard warning lamps do not illuminate P.54E-226."

**Step 2. M.U.T.-III CAN bus diagnostics.**
Use the M.U.T.-III to diagnose the CAN bus lines.

**Q: Is the check result normal?**
**YES :** Go to Step 3.
**NO :** Repair the CAN bus line (Refer to GROUP 54F, Diagnosis P.54F-13).

**Step 3. Check for combination meter diagnosis code.**
Check whether the combination meter-related diagnosis code is set.

**Q: Is the diagnosis code set?**
**YES :** Diagnose the combination meter (Refer to GROUP 54A – Troubleshooting P.54A-12).
**NO :** Go to Step 4.

**Step 4. M.U.T.-III actuator test**
Perform the actuator test for the combination meter, and check that the trurn-signal indicator lamps illuminate (Refer to GROUP 54A – Combination Meter P.54A-95).

**Q: Is the check result normal?**
**YES :** Replace the ETACS-ECU.
**NO :** Replace the combination meter.

Main Index
Group TOC

# FOG LAMP

## INSPECTION PROCEDURE M-1: The front fog lamps do not illuminate normally.

**⚠ CAUTION**
**Whenever the ECU is replaced, ensure that the input and output signal circuits are normal.**

**Front Fog Lamp Relay Circuit**

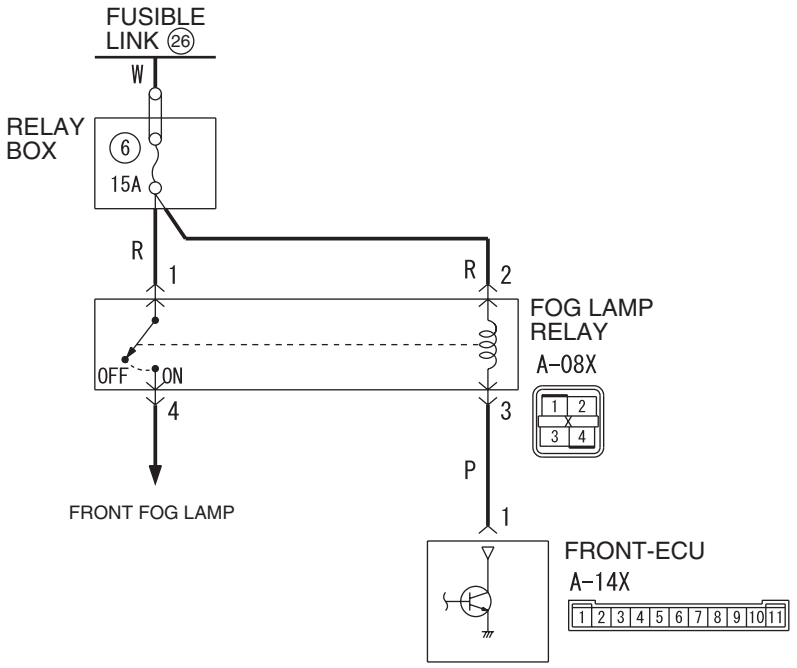


Wire colour code
B : Black LG : Light green G : Green L : Blue W : White Y : Yellow SB : Sky blue
BR : Brown O : Orange GR : Grey R : Red P : Pink V : Violet PU : Purple

W6X54X040A

## COMMENTS ON TROUBLE SYMPTOM

If the fog lamps do not illuminate normally, the input signal circuit(s) below or the ETACS-ECU may be defective.

- Tail lamp switch
- Headlamp switch
- Automatic lighting switch
- Front fog lamp switch

## POSSIBLE CAUSES

- Malfunction of the column switch
- Malfunction of the front fog lamp switch
- Malfunction of the front-ECU
- Malfunction of the ETACS-ECU
- Damaged harness wires and connectors

## DIAGNOSIS PROCEDURE

**Step 1. Check that the tail/stop lamps and headlamps operate.**

Check that the tail/stop lamps and headlamps illuminate normally.

**Q: Is the check result normal?**

**YES :** Go to Step 2.

**NO :** Repair the tail/stop lamp(s) and headlamp(s). Refer to trouble symptom chart P.54E-40.

Main Index
Group TOC

**Step 2. ECU check by using the SWS monitor**

Check that the power supply and earth lines to the column switch (column-ECU), the ETACS-ECU and the front-ECU and the SWS communication lines are normal.

- Ignition switch: OFF

**ECUS TO BE CHECKED**

- COLUMN ECU
- ETACS ECU
- FRONT ECU

**OK: "OK" is displayed for all the items**

**Q: Is the check result normal?**

**"OK" is displayed for all the items :** Go to Step 3.

**"NG" is displayed on the "COLUMN ECU" menu. :** Refer to Inspection Procedure A-2 "Communication with the column switch (column-ECU) is not possible P.54E-51."

**"NG" is displayed on the "ETACS ECU" menu. :** Refer to Inspection Procedure A-3 "Communication with the ETACS-ECU is not possible P.54E-55."

**"NG" is displayed on the "FRONT ECU" menu. :** Refer to Inspection Procedure A-4 "Communication with the front-ECU is not possible P.54E-60."

**Step 3. Function diagnosis by using the SWS monitor**

Check the SWS communication signal, which are related to the front fog lamps.

**<Selected item> LIGHTING - F.FOG LAMP**

- Ignition switch: ON
- Lighting switch: "TAIL" or "HEAD"
- Front fog lamp switch: ON

| Item No. | Item name | Normal condition |
|---|---|---|
| Item 00 | HEADLAMP SW | ON when the lighting switch is at HEAD |
| Item 01 | TAIL LAMP SW | ON when the lighting switch is at TAIL or HEAD |
| Item 30 | IG SW(IG1) | ON |
| Item 36 | F.FOG LAMP | ON |
| Item 70 | FRONT ECU ACK | NORMAL ACK or HI-BEAM ACK |

**OK: Normal conditions are displayed for all the items.**

**Q: Is the check result normal?**

**Normal conditions are displayed for all the items. :** Go to Step 4.

**Normal condition is not displayed for item 00 or 01. :** Refer to inspection procedure P-5 "Column switch (lighting and turn-signal lamp switch) signal is not received P.54E-300."

**Normal condition is not displayed for item No.30. :** Refer to inspection procedure P-2 "The ignition switch (IG1) signal is not received P.54E-293."

**Normal condition is not displayed for item No.36. :** Refer to inspection procedure P-3 "The front fog lamp switch signal is not received P.54E-295."

**Normal condition is not displayed for item No.70. :** Replace the front-ECU.

**Step 4. Connector check: A-08X front fog lamp relay connector**

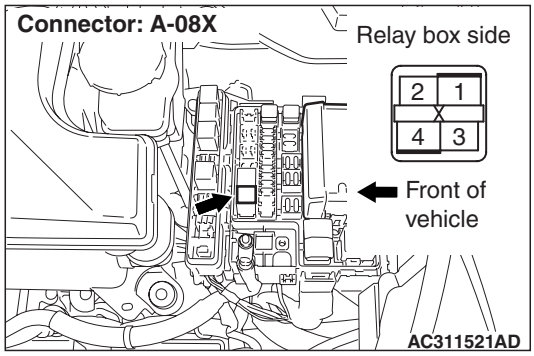


**Q: Is the check result normal?**

**YES :** Go to Step 5.

**NO :** Repair the defective connector.

**Step 5. Check the front fog lamp relay.**

Refer to GROUP 54A – Front fog lamp P.54A-149.

**Q: Is the check result normal?**

**YES :** Go to Step 6.

**NO :** Replace the front fog lamp relay.

Main Index
Group TOC

**Step 6. Voltage measurement at the A-08X front fog lamp relay connector.**

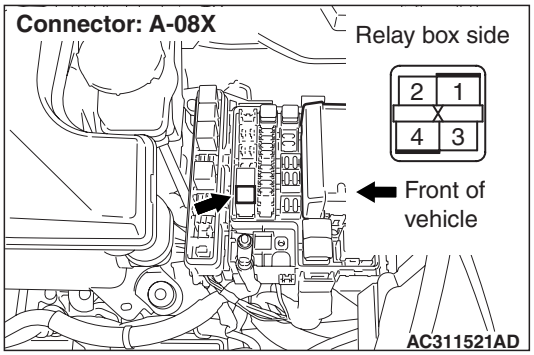


(1) Remove the front fog lamp relay, and measure at the relay box side.

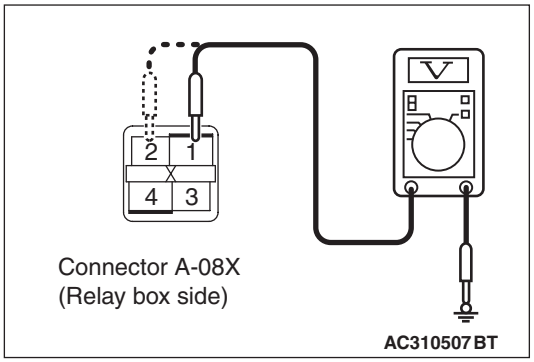


(2) Check the voltage between the front fog lamp relay connector and body earth.
- Voltage between A-08X front fog lamp relay connector terminal No.1 and body earth
- Voltage between A-08X front fog lamp relay connector terminal No.2 and body earth

**OK: System voltage**

**Q: Is the check result normal?**
**YES :** Go to Step 8.
**NO :** Go to Step 7.

**Step 7. Check the wiring harness between A-08X front fog lamp relay connector terminals No.1 and No.2 to the fusible link (26).**

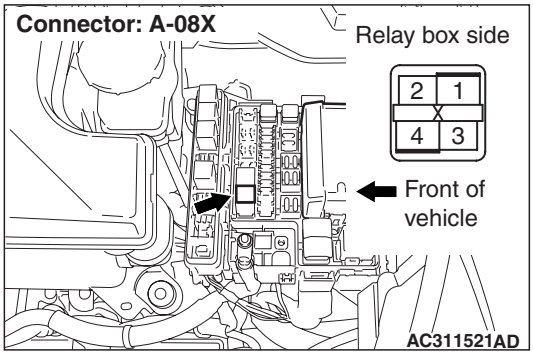


- Check the power supply line for open circuit.

**Q: Is the check result normal?**
**YES :** The trouble can be an intermittent malfunction (Refer to GROUP 00 – How to Cope with Intermittent Malfunction P.00-5).
**NO :** Repair the wiring harness.

**Step 8. Connector check: A-14X front-ECU connector**

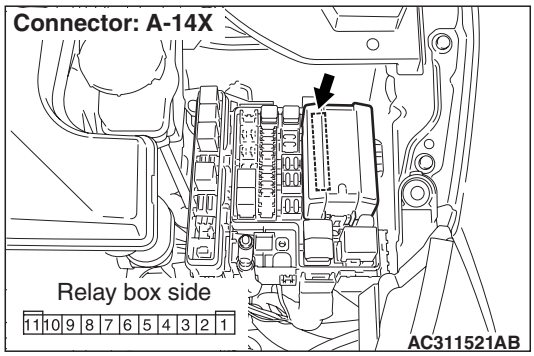


**Q: Is the check result normal?**
**YES :** Go to Step 9.
**NO :** Repair the defective connector.

**Step 9. Check the wiring harness between A-08X front fog lamp relay connector terminal No.3 to A-14X front-ECU connector terminal No.1.**

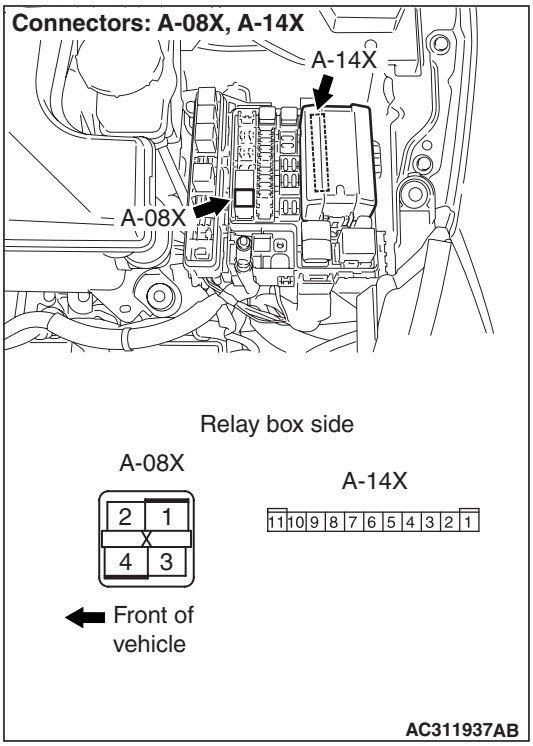


- Check the output lines for open circuit.

**Q: Is the check result normal?**
**YES :** Go to Step 10.
**NO :** Repair the wiring harness.

Main Index
Group TOC

**Step 10. Retest the system.**
Check that the front fog lamps illuminate normally.

**Q: Is the check result normal?**
**YES :** The trouble can be an intermittent malfunction (Refer to GROUP 00 – How to Cope with Intermittent Malfunction P.00-5).
**NO :** Replace the ETACS-ECU.

## INSPECTION PROCEDURE M-2: Any of the front fog lamps does not illuminate.

**⚠ CAUTION**
**Whenever the ECU is replaced, ensure that the input and output signal circuits are normal.**

**Front Fog Lamps Circuit**

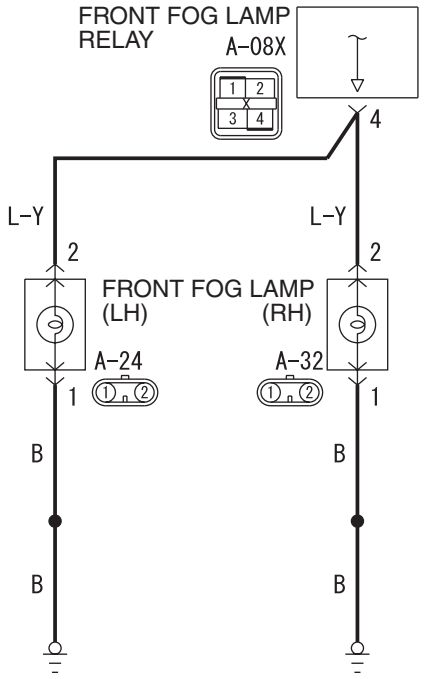


Wire colour code
B : Black LG : Light green G : Green L : Blue W : White Y : Yellow SB : Sky blue
BR : Brown O : Orange GR : Grey R : Red P : Pink V : Violet PU : Purple

W6X54X041A

## COMMENTS ON TROUBLE SYMPTOM

If any of the front fog lamps do not illuminate, the wiring harness connector(s), the bulb or the fuse may be defective or burned out.

## POSSIBLE CAUSES

- Burned-out front fog lamp bulb
- Damaged harness wires and connectors

## DIAGNOSIS PROCEDURE

**Step 1. Connector check: A-32 front fog lamp (RH) connector or A-24 front fog lamp (LH) connector**

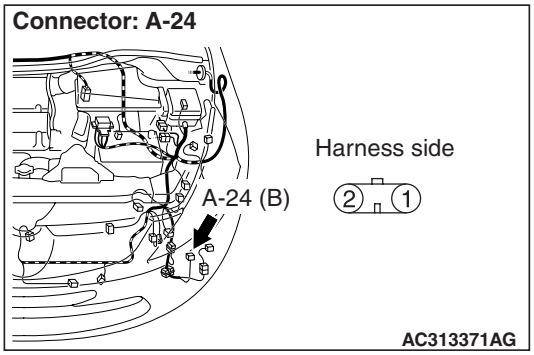


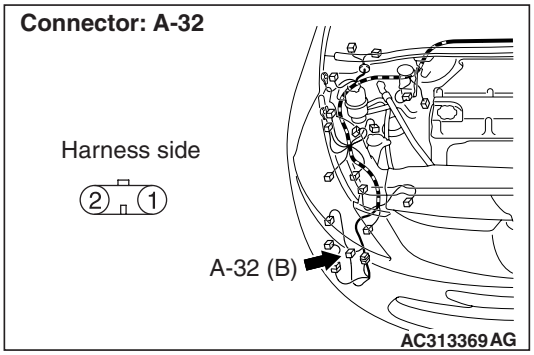


**Q: Is the check result normal?**
**YES :** Go to Step 2.
**NO :** Repair the defective connector.

**Step 2. Check the bulbs of the front fog lamps lamp.**
Check the bulb(s) of the defective lamp.

**Q: Is the check result normal?**
**YES :** Go to Step 3.
**NO :** Replace the bulb(s) of the defective lamp.

**Step 3. Resistance measurement at the A-32 front fog lamp (RH) connector or A-24 front fog lamp (LH) connector.**

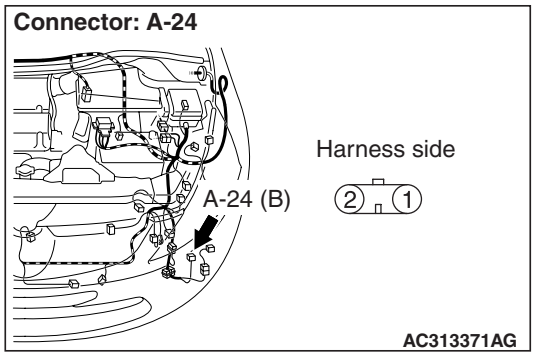


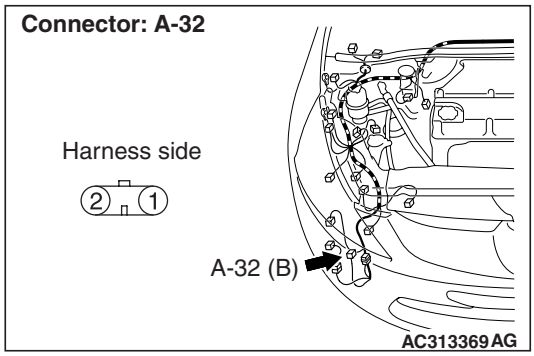


(1) Disconnect the connector, and measure at the wiring harness side.

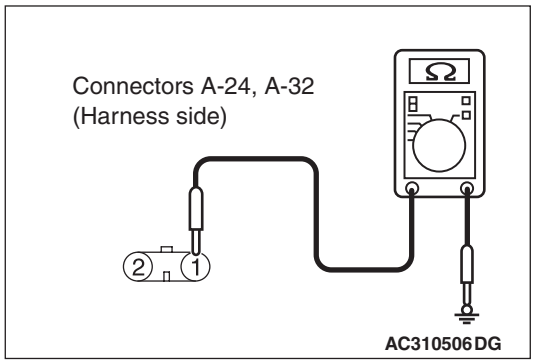


(2) Check the resistance between the front fog lamp connector and body earth.
- Resistance between A-32 front fog lamp (RH) connector terminal No.1 and body earth
- Resistance between A-24 front fog lamp (LH) connector terminal No.1 and body earth

**OK: 2 Ω or less**

**Q: Is the check result normal?**
**YES :** Go to Step 5.
**NO :** Go to Step 4.

Main Index
Group TOC

**Step 4. Check the wiring harness from A-32 front fog lamp (RH) connector or A-24 front fog lamp (LH) connector terminal No.1 to body earth**

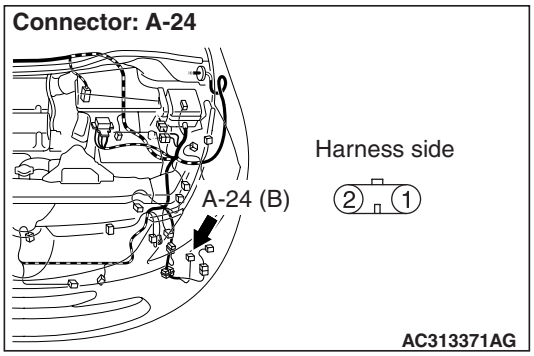


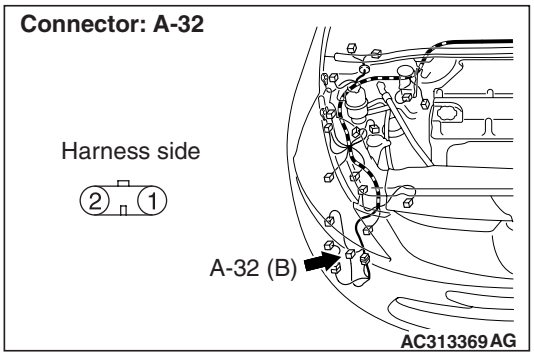


- Check the earth wires for open circuit.

**Q: Is the check result normal?**
**YES :** The trouble can be an intermittent malfunction (Refer to GROUP 00 – How to Cope with Intermittent Malfunction P.00-5).
**NO :** Repair the wiring harness.

**Step 5. Connector check: A-08X front fog lamp relay connector**

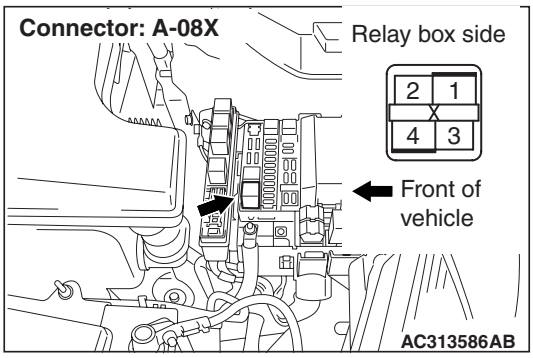


**Q: Is the check result normal?**
**YES :** Go to Step 6.
**NO :** Repair the defective connector.

**Step 6. Check the wiring harness from A-32 front fog lamp (RH) connector or A-24 front fog lamp (LH) connector terminal No.2 to A-08X front fog lamp relay connector terminal No.4.**

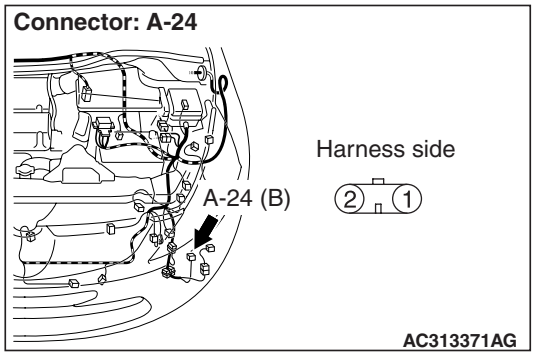


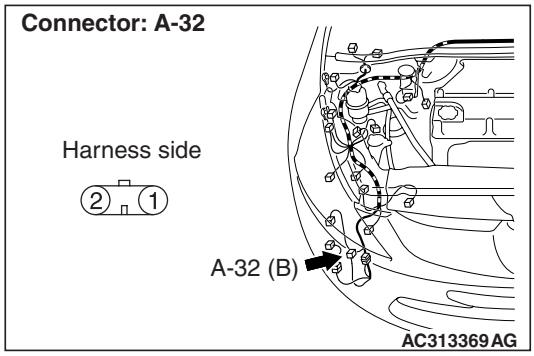


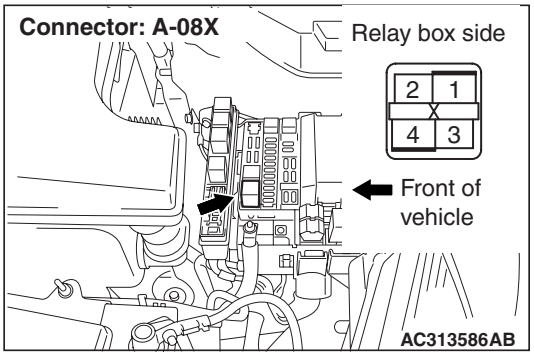


- Check the power supply line for open circuit.

**Q: Is the check result normal?**
**YES :** Go to Step 7.
**NO :** Repair the wiring harness.

**Step 7. Retest the system.**
Check that the front fog lamp illuminate normally.

**Q: Is the check result normal?**
**YES :** The trouble can be an intermittent malfunction (Refer to GROUP 00 – How to Cope with Intermittent Malfunction P.00-5).
**NO :** Replace the front fog lamp(s).

Main Index
Group TOC

## INSPECTION PROCEDURE M-3: The front fog lamp indicator does not illuminate normally.

**⚠ CAUTION**
**Whenever the ECU is replaced, ensure that the input and output signal circuits are normal.**

**Fog Lamp Indicator Lamp Circuit**

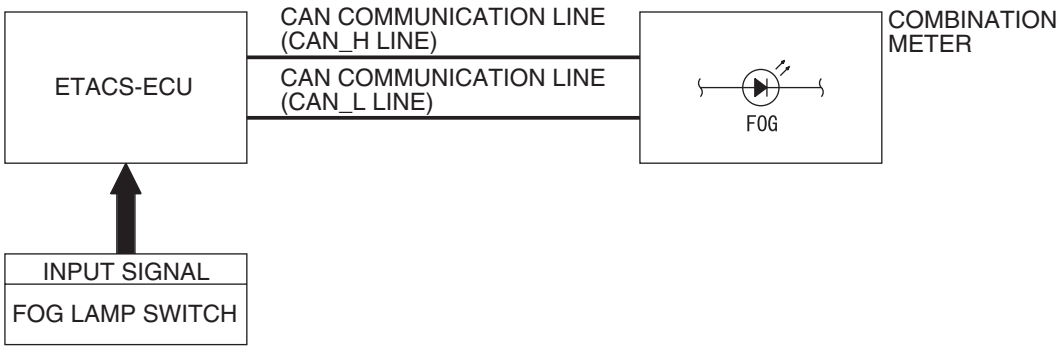


W4X54X045A

## COMMENTS ON TROUBLE SYMPTOM

If the fog lamp indicator does not illuminate normally, connector(s), wiring harness in the CAN bus lines, the ETACS-ECU or the combination meter may be defective.

## POSSIBLE CAUSES

- The combination meter may be defective
- The ETACS-ECU may be defective
- Damaged harness wires and connectors

## DIAGNOSIS PROCEDURE

**Step 1. Check the front fog lamps.**
When the front fog lamp switch is operated, check that the front fog lamps illuminate/go off normally.

**Q: Is the check result normal?**
**YES :** Go to Step 2.
**NO :** Refer to Inspection Procedure M-2 "Any of the front fog lamps does not illuminate P.54E-244."

**Step 2. M.U.T.-III CAN bus diagnostics.**
Use the M.U.T.-III to diagnose the CAN bus lines.

**Q: Is the check result normal?**
**YES :** Go to Step 3.
**NO :** Repair the CAN bus line (Refer to GROUP 54F, Diagnosis P.54F-13).

**Step 3. Check for combination meter diagnosis code.**
Check whether the combination meter-related diagnosis code is set.

**Q: Is the diagnosis code set?**
**YES :** Diagnose the combination meter (Refer to GROUP 54A – Troubleshooting P.54A-12).
**NO :** Go to Step 4.

**Step 4. M.U.T.-III actuator test**
Perform the actuator test for the combination meter, and check that the front fog lamp indicator illuminates (Refer to GROUP 54A – Combination Meter P.54A-95).

**Q: Is the check result normal?**
**YES :** Replace the ETACS-ECU.
**NO :** Replace the combination meter.

Main Index
Group TOC

# INTERIOR LAMP

**INSPECTION PROCEDURE N-1: The interior lamps (room ramp, rear personal lamps, door lamps, luggage compartment lamp, key cylinder illumination lamp) does not illuminate or extinguish normally.**

**⚠ CAUTION**
**Whenever the ECU is replaced, ensure that the input and output signal circuits are normal.**

**Interior Lamp Circuit**

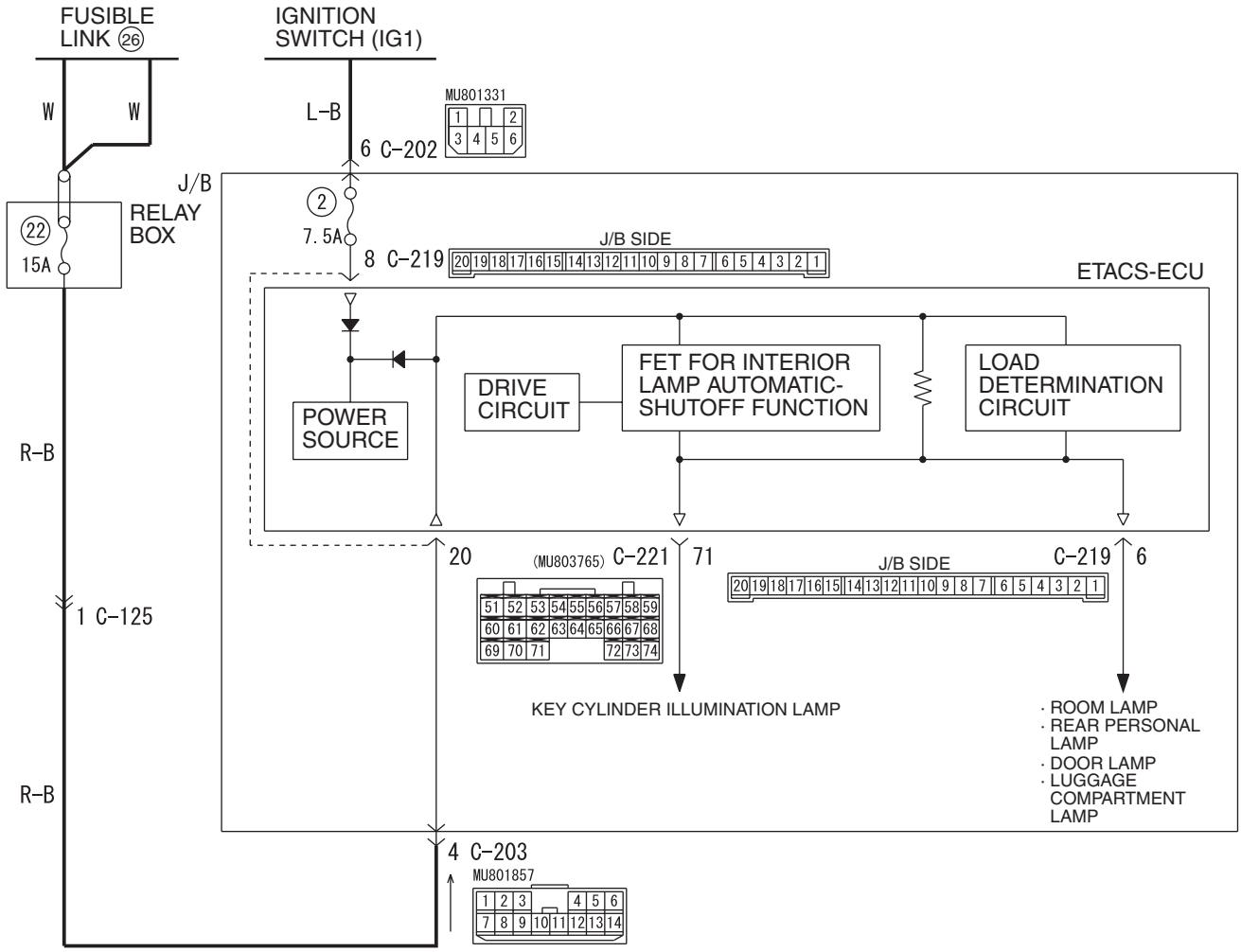


Wire colour code
B : Black LG : Light green G : Green L : Blue W : White Y : Yellow SB : Sky blue
BR : Brown O : Orange GR : Grey R : Red P : Pink V : Violet PU : Purple

W6X54X042A

## COMMENTS ON TROUBLE SYMPTOM

The ETACS-ECU operates the interior lamps (room lamp, rear personal lamp. luggage compartment lamp, door lamp, key cylinder illumination lamp) in accordance with the input signals below.

- Ignition switch (IG1)
- Door switches
- Tailgate switch
- Driver's door lock actuator
- Interior lamp switch
- Multi-purpose fuse No.18
- Key reminder switch
- Interior lamp loaded signal

Main Index
Group TOC

If this function does not work normally, these input signal circuit(s) or the ETACS-ECU may be defective. Alternatively, the room lamp delay off time has been set to 0 second by using the customisation function. It is also possible that the security alarm is armed.

## POSSIBLE CAUSES

- Malfunction of the door switches
- Malfunction of the room lamp switches
- Malfunction of the driver's door lock actuator
- Malfunction of the ETACS-ECU
- Malfunction of the key reminder switch
- Damaged harness wires and connectors

## DIAGNOSTIC PROCEDURE

**Step 1. Customise function by using the SWS monitor**

Use the SWS monitor customisation function to confirm that "Room lamp auto-cut time" is set to other than "Without function" (one of the settings below).

- 3 min.
- 30 min.
- 60 min.

**Q: Is the check result normal?**

**YES :** Go to Step 2.

**NO :** Use the SWS monitor customisation function to set "Room lamp auto-cut time" to any setting other than "Without function" (Refer to P.54E-353).

**Step 2. Check the interior lamp switch.**

Check that the right or left room lamp illuminates when the interior lamp switch is operated.

**Q: Is the check result normal?**

**YES :** Go to Step 3.

**NO :** Go to Step 7.

**Step 3. ECU check by using the SWS monitor**

Check that the power supply and earth lines to the ETACS-ECU and the SWS communication lines are normal.

- Ignition switch: OFF

**ECUS TO BE CHECKED**

- ETACS ECU

**OK: "OK" is displayed on the "ETACS ECU" menu.**

**Q: Is the check result normal?**

**YES :** Go to Step 4.

**NO :** Refer to Inspection Procedure A-3 "Communication with the ETACS-ECU is not possible P.54E-55."

**Step 4. SWS monitor data list**

Check the SWS communication signal, which is related to the room lamp and rear personal lamps.

**<Selected item> ETACS**

- Ignition switch: OFF
- Driver's door: open

| Item No. | Item name | Normal condition |
|---|---|---|
| Item 30 | IG SW(IG1) | OFF |
| Item 32 | DR DOOR SW | ON |

**OK: Normal conditions are displayed for all the items.**

**Q: Is the check result normal?**

**Normal conditions are displayed for all the items :** Go to Step 5.

**Normal condition is not displayed for item No.30. :** Refer to inspection procedure P-2 "The ignition switch (IG1) signal is not received P.54E-293."

**Normal condition is not displayed for item No.32. :** Refer to inspection procedure P-4 "The driver's door switch signal is not received P.54E-298."

Main Index
Group TOC

### Step 5. ETACS switch data by using the SWS monitor

Check the ETACS-ECU input signal related to the room lamp and rear personal lamps.

- Ignition switch: OFF (key inserted)

| Item No. | Item name | Normal condition |
|---|---|---|
| Item 3 | Key reminder switch | OFF |

- Passenger's door: Close → Open

| Item No. | Item name | Normal condition |
|---|---|---|
| Item 5 | Passenger's door switch | from OFF to ON |

- Rear door (RH): Close → Open

| Item No. | Item name | Normal condition |
|---|---|---|
| Item 41 | Rear door (right side) switch | from OFF to ON |

- Rear door (LH): Close → Open

| Item No. | Item name | Normal condition |
|---|---|---|
| Item 42 | Rear door (left side) switch | from OFF to ON |

- Driver's door: Unlock → Lock

| Item No. | Item name | Normal condition |
|---|---|---|
| Item 21 | Dr door lock actuator lock SW | from OFF to ON |
| Item 22 | Dr door lock actuator unlock SW | from ON to OFF |

- Interior lamp ON switch: ON

| Item No. | Item name | Normal condition |
|---|---|---|
| Item 31 | Room lamp ALL ON switch | ON |

- Interior lamp OFF switch: ON

| Item No. | Item name | Normal condition |
|---|---|---|
| Item 32 | Room lamp ALL OFF switch | ON |

**OK: Normal conditions are displayed for all the items.**

**Q: Are the check result normal?**

**Normal conditions are displayed for all the items :** Go to Step 6.

**Normal condition is not displayed for item No.03. :** Refer to inspection procedure P-9 "The key reminder switch signal is not received P.54E-310."

**Normal condition is not displayed for item No.5, No.41 or No.42. :** Refer to inspection procedure P-12 "All the door switch signals are not received P.54E-316."

**Normal condition is not displayed for item No.21 or No.22. :** P-13 "The driver's door lock actuator switch signal is not received P.54E-320."

**Normal condition is not displayed for item No.31 or No.32. :** Refer to inspection procedure P-17: "The interior lamp "all on" or "all off" switch signal is not sent to the ETACS-ECUP.54E-332."

### Step 6. Pulse check

Check the input signals below, which are related to the interior lamp automatic-shutdown function.

- Close all of the doors.
- Illuminate the room lamp.

| Item name | Check condition |
|---|---|
| Interior lamp loaded signal | When a load is applied through multi-purpose fuse No.18 |

**OK: The M.U.T.-III sounds or the voltmeter needle fluctuates.**

**Q: Is the check result normal?**

**YES :** Go to Step 7.

**NO :** Refer to inspection procedure P-20 "Interior lamp loaded signal is not detected P.54E-340."

### Step 7. Connector check: C-219 ETACS-ECU connector

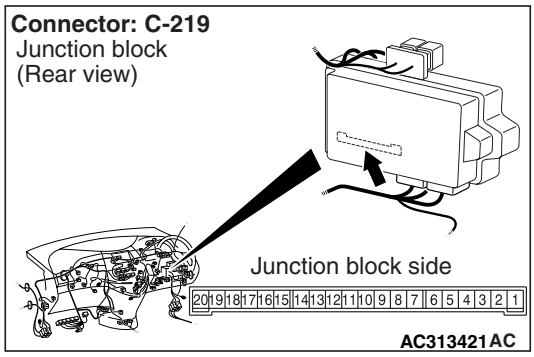


**Q: Is the check result normal?**

**YES :** Go to Step 8.

**NO :** Repair the defective connector.

Main Index
Group TOC

**Step 8. Check the wiring harness from C-219 ETACS-ECU connector terminal Nos.5 and 6 to E-11 intermediate connector terminal Nos.1 and 2.**

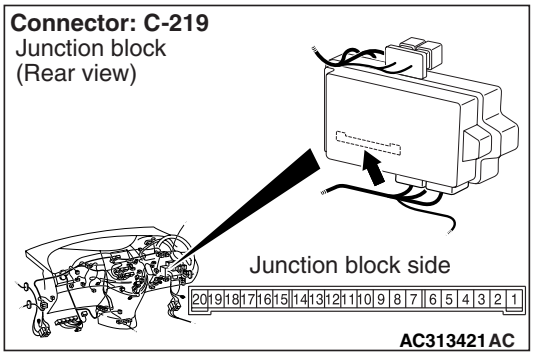


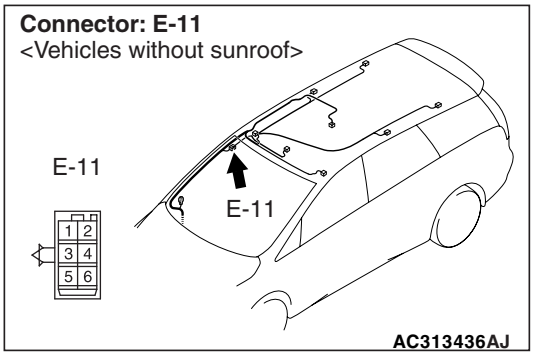


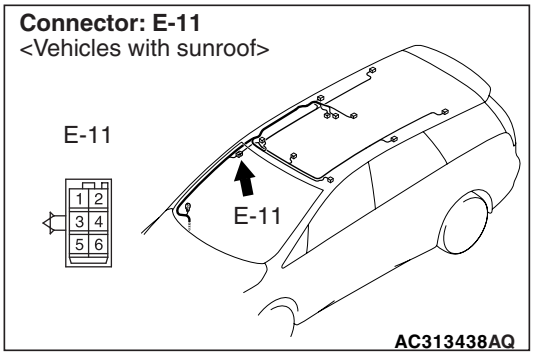


*NOTE:*

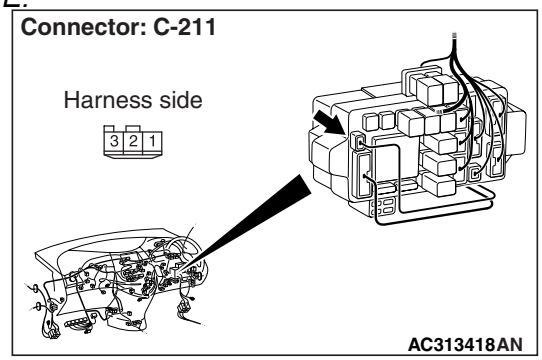


*Prior to the wiring harness inspection, check junction block connector C-211, and repair if necessary.*

- Check the power supply line for open circuit.

**Q: Is the check result normal?**

**YES :** The trouble can be an intermittent malfunction (Refer to GROUP 00 – How to Cope with Intermittent Malfunction P.00-5).

**NO :** Repair the wiring harness.

Main Index
Group TOC

## INSPECTION PROCEDURE N-2: The room lamp does not illuminate normally.

**⚠ CAUTION**
**Whenever the ECU is replaced, ensure that the input and output signal circuits are normal.**

**Room Lamp Circuit**

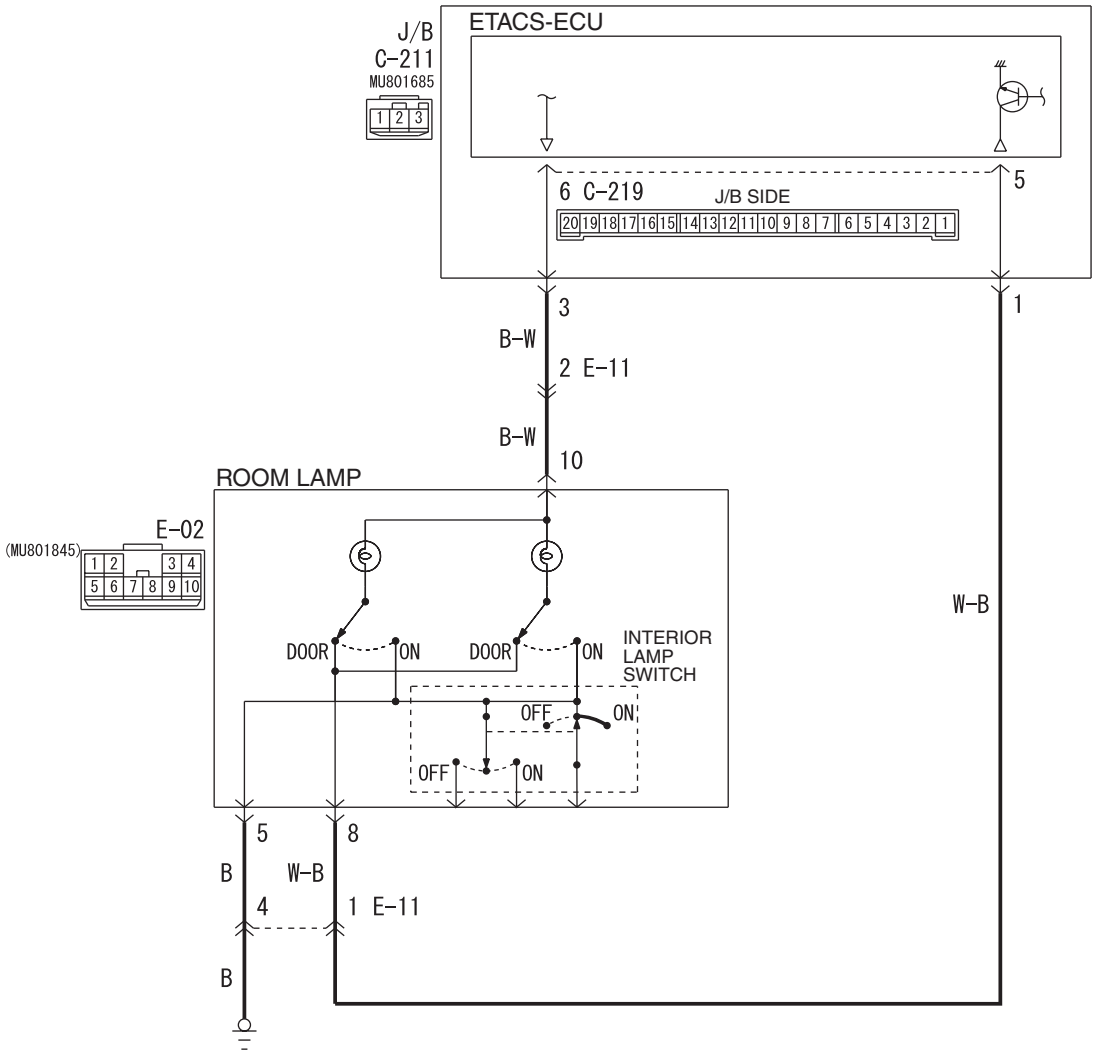


Wire colour code
B : Black LG : Light green G : Green L : Blue W : White Y : Yellow SB : Sky blue
BR : Brown O : Orange GR : Grey R : Red P : Pink V : Violet PU : Purple

W6X54X043A

## COMMENTS ON TROUBLE SYMPTOM

If the room lamp does not illuminate or extinguish normally, wiring harness connector(s) or the bulb may be defective.

## POSSIBLE CAUSES

- Malfunction of the room lamp
- Malfunction of the room lamp bulbs
- Malfunction of the ETACS-ECU
- Damaged harness wires and connectors

Main Index
Group TOC

## DIAGNOSTIC PROCEDURE

**Step 1. Check the interior lamp switch.**
Check that the right or left room lamp illuminates when the interior lamp switch is operated.

**Q: Is the check result normal?**
**YES :** Go to Step 2.
**NO :** Go to Step 12.

**Step 2. Check the room lamp switch.**
Check which position (ON or DOOR) of the room lamp switch does not activate the room lamp.

**Q: Which switch position does not activate the lamp?**
**The lamp illuminates at neither the ON or DOOR position. :** Replace the room lamp.
**The lamp does not illuminate at the ON position. :** Go to Step 3.
**The lamp does not illuminate at the DOOR position. :** Go to Step 8.

**Step 3. Connector check: E-02 room lamp connector**

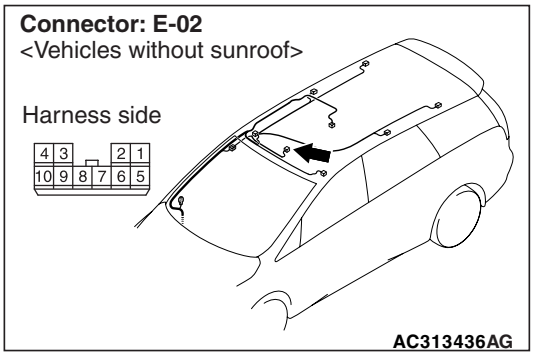


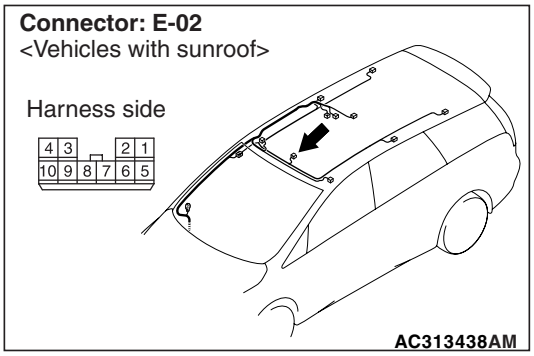


**Q: Is the check result normal?**
**YES :** Go to Step 4.
**NO :** Repair the defective connector.

**Step 4. Check the bulbs of the room lamp.**
Check that the room lamp bulbs are not burned out.

**Q: Is the check result normal?**
**YES :** Go to Step 5.
**NO :** Replace the room lamp bulb.

**Step 5. Connector check: C-219 ETACS-ECU connector and E-02 room lamp connector**

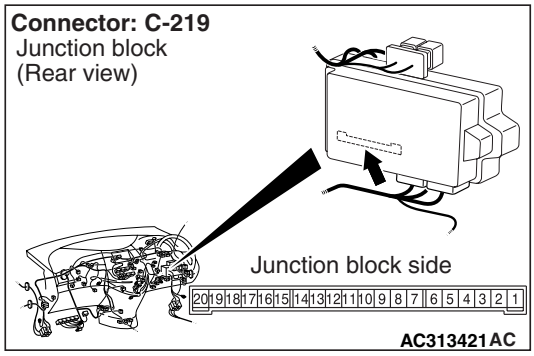


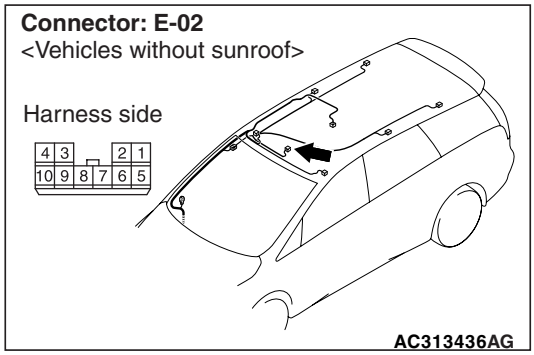


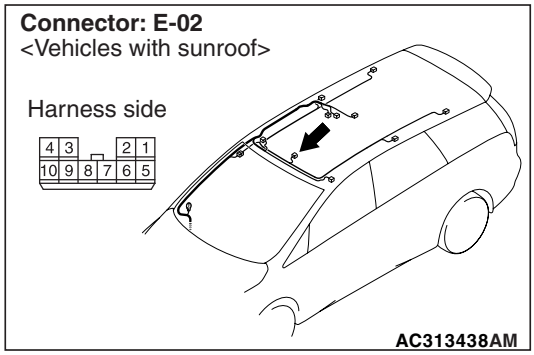


**Q: Is the check result normal?**
**YES :** Go to Step 6.
**NO :** Repair the defective connector.

Main Index
Group TOC

**Step 6. Check the wiring harness from C-219 ETACS-ECU connector terminal No.6 to E-02 room lamp connector terminal No.10.**

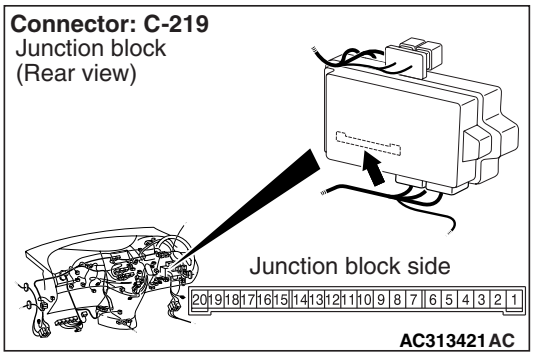


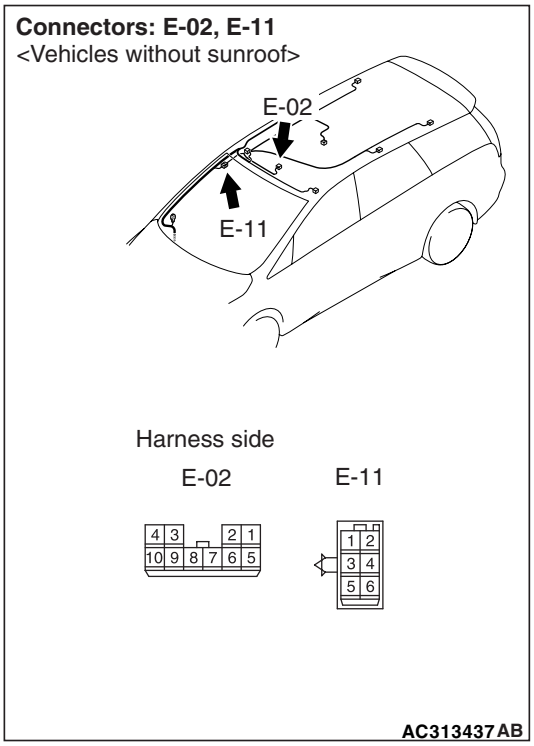


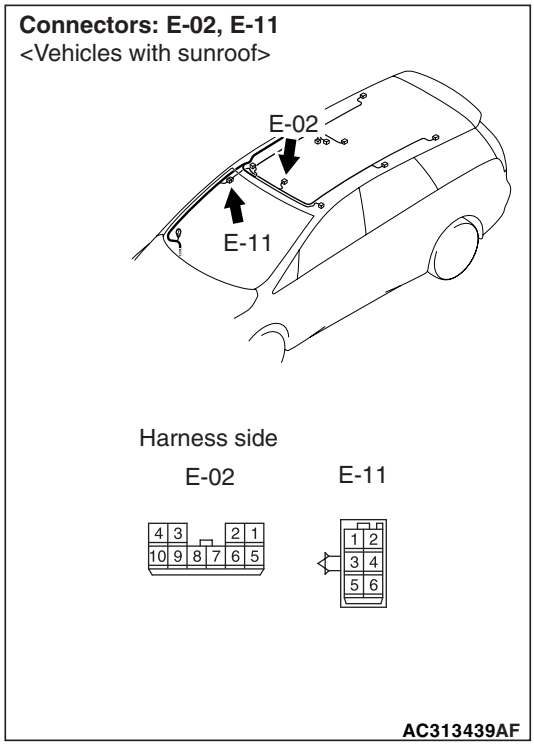


*NOTE:*

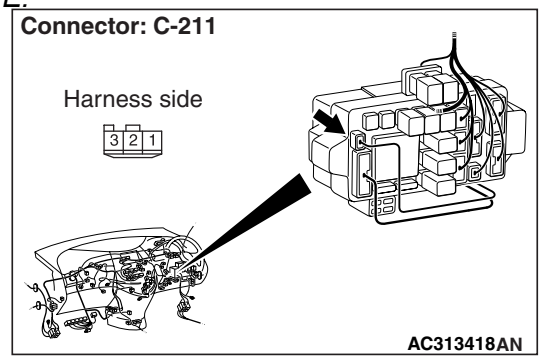


*Prior to the wiring harness inspection, check intermediate connector E-11 and junction block connector C-211, and repair if necessary.*

- Check the power supply line for open circuit.

**Q: Is the check result normal?**

**YES :** Go to Step 7.

**NO :** Repair the wiring harness.

Main Index
Group TOC

### Step 7. Check the wiring harness from E-02 room lamp connector terminal No.10 to body earth.

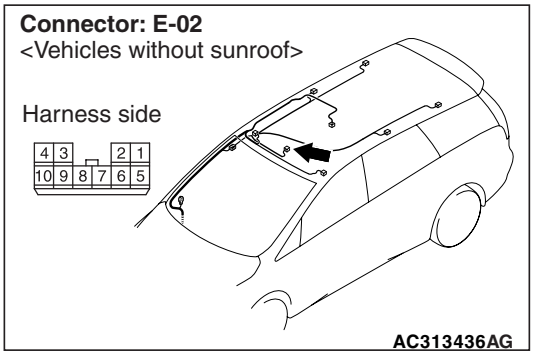


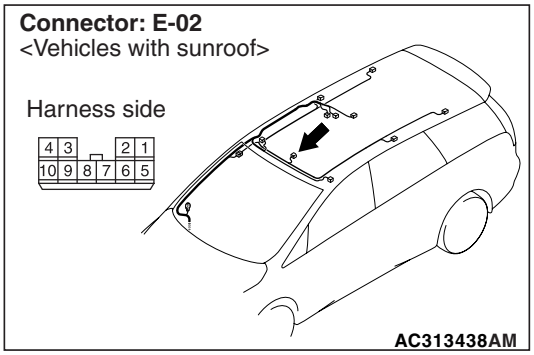


- Check the power supply line for open circuit.

**Q: Is the check result normal?**
**YES :** Replace the room lamp.
**NO :** Repair the wiring harness.

### Step 8. Connector check: E-02 room lamp connector

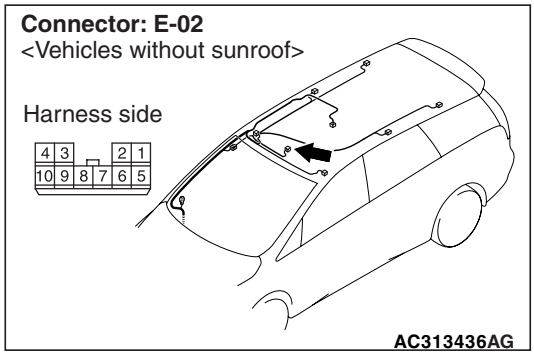


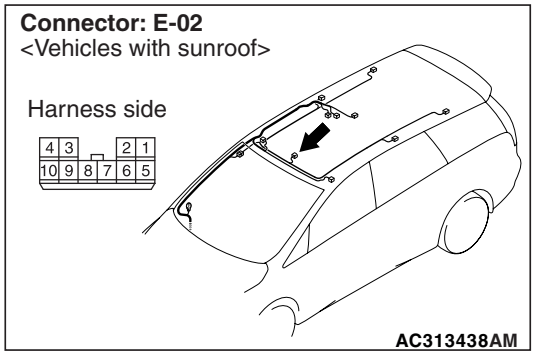


**Q: Is the check result normal?**
**YES :** Go to Step 9.
**NO :** Repair the defective connector.

### Step 9. Check the bulbs of the room lamp.

Check that the room lamp bulbs are not burned out.

**Q: Is the check result normal?**
**YES :** Go to Step 10.
**NO :** Replace the room lamp bulb.

### Step 10. Connector check: C-219 ETACS-ECU connector

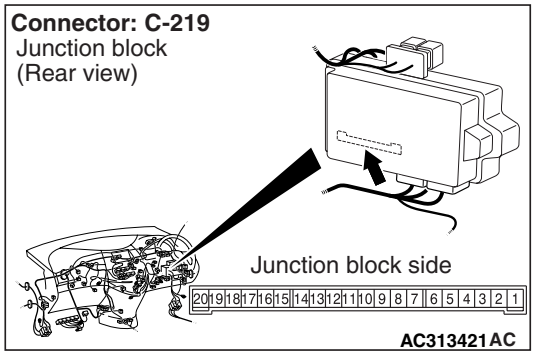


**Q: Is the check result normal?**
**YES :** Go to Step 11.
**NO :** Repair the defective connector.

Main Index
Group TOC

**Step 11. Check the wiring harness from C-219 ETACS-ECU connector terminal No.5 to E-02 room lamp connector terminal No.8.**

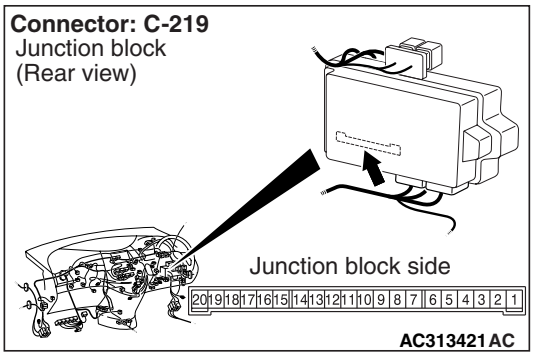


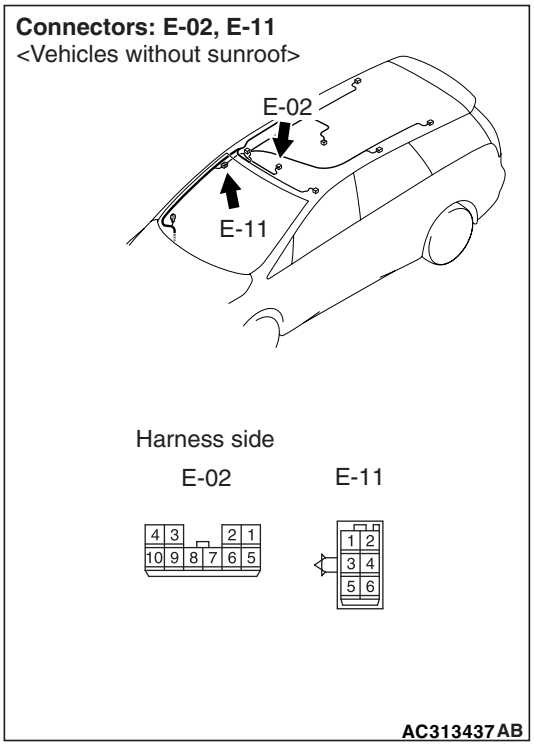


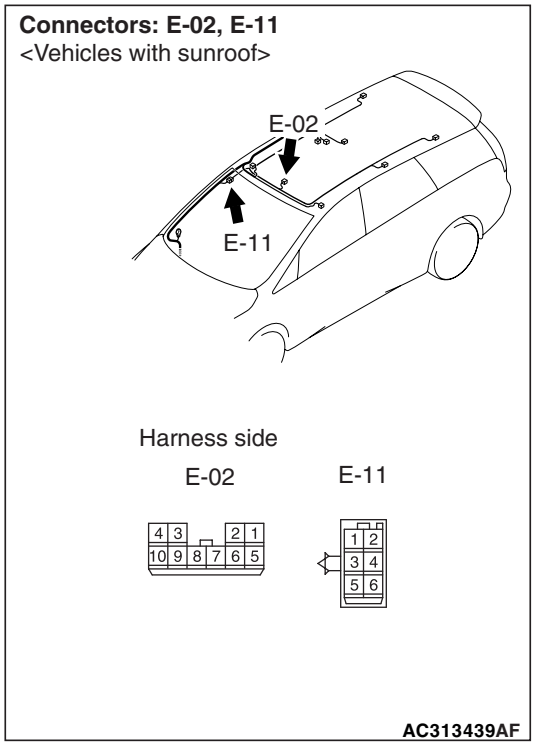


*NOTE:*

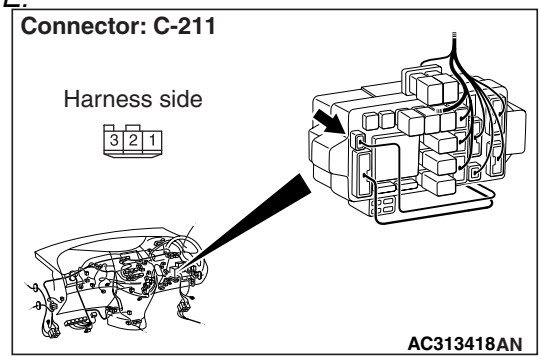


*Prior to the wiring harness inspection, check intermediate connector E-11 and junction block connector C-211, and repair if necessary.*

- Check the earth wires for open circuit.

**Q: Is the check result normal?**

**YES :** Replace the room lamp.

**NO :** Repair the wiring harness.

Main Index
Group TOC

## Step 12. Connector check: C-221 ETACS-ECU connector and E-02 room lamp connector

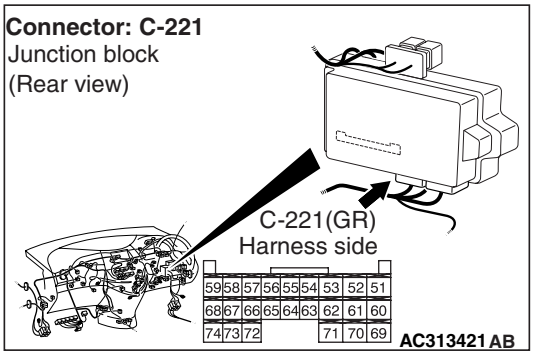


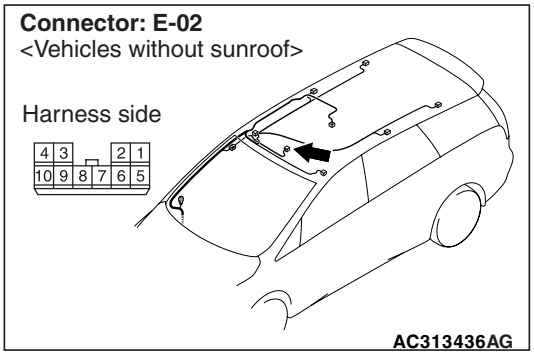


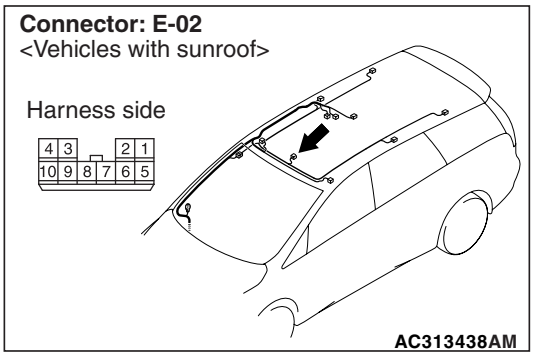


**Q: Is the check result normal?**

**YES :** Go to Step 13.

**NO :** Repair the defective connector.

## Step 13. Check the wiring harness from C-221 ETACS-ECU connector terminal Nos.53 and 63 to E-02 room lamp connector terminal Nos.6 and 7.

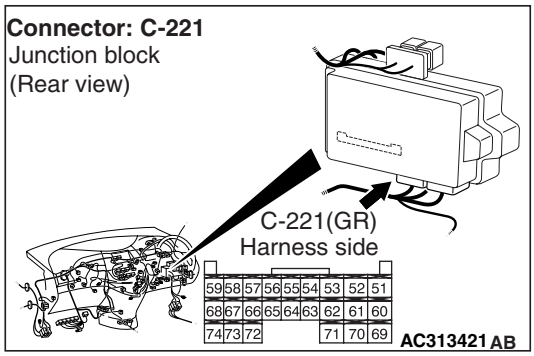


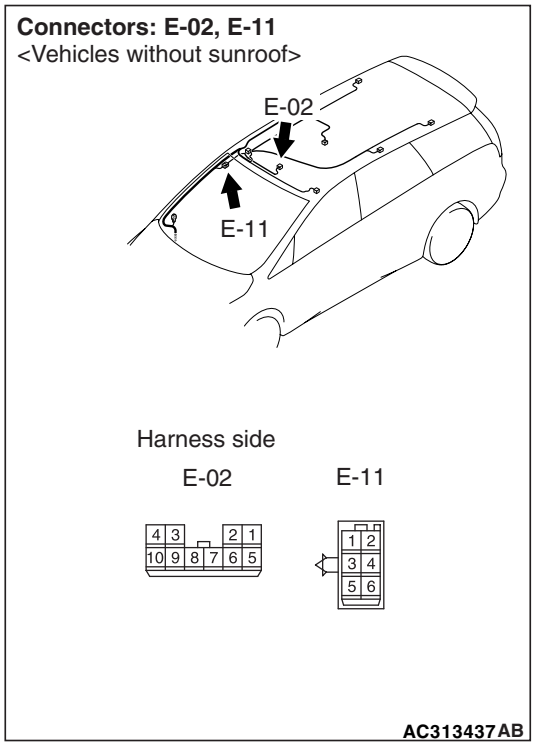

Main Index
Group TOC

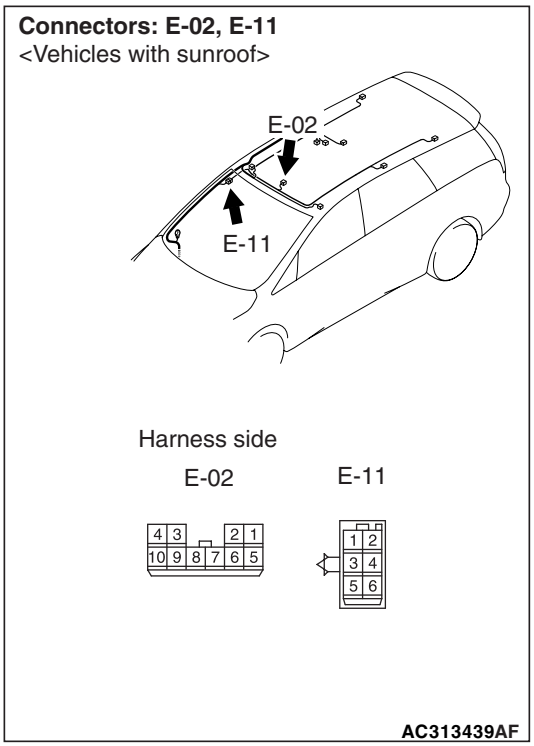


*NOTE:*

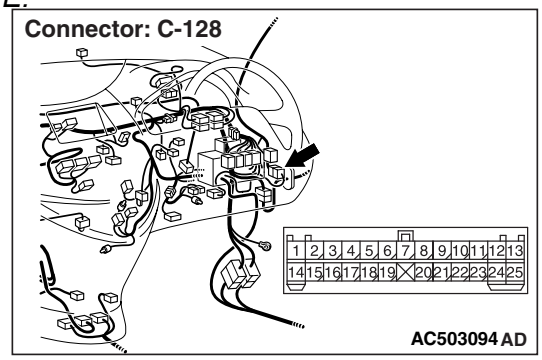


*Prior to the wiring harness inspection, check intermediate connector E-11 and junction block connector C-128, and repair if necessary.*

- Check the power supply line for open circuit.

**Q: Is the check result normal?**

**YES :** Replace the room lamp.

**NO :** Repair the wiring harness.

Main Index
Group TOC

## INSPECTION PROCEDURE N-3: The rear personal lamp does not illuminate normally.

**⚠ CAUTION**

**Whenever the ECU is replaced, ensure that the input and output signal circuits are normal.**

**Room Lamp and Rear Personal Lamp Circuit**

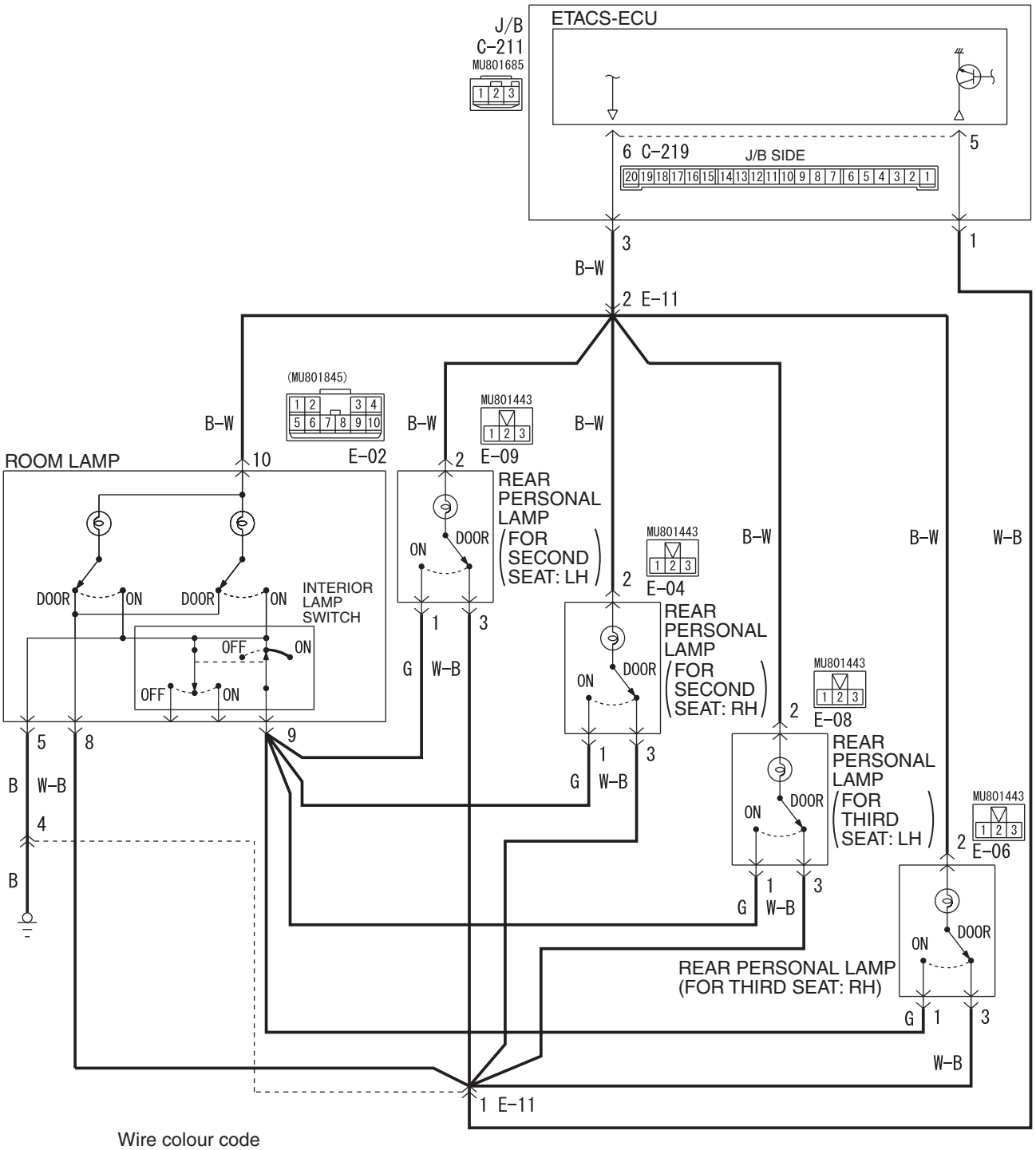


Wire colour code
B : Black LG : Light green G : Green L : Blue W : White Y : Yellow SB : Sky blue
BR : Brown O : Orange GR : Gray R : Red P : Pink V : Violet

W4X54E036A

Main Index
Group TOC

## COMMENTS ON TROUBLE SYMPTOM

If the rear personal lamps do not illuminate or extinguish normally, wiring harness connector(s) or the bulb may be defective.

## POSSIBLE CAUSES

- Malfunction of the interior lamp switch
- Malfunction of the rear personal lamp
- Malfunction of the rear personal lamp bulbs
- Damaged harness wires and connectors

## DIAGNOSTIC PROCEDURE

**Step 1. Check the operation of the room lamp.**
Check that the room lamps illuminate and extinguish normally.

**Q: Is the check result normal?**
**YES :** Go to Step 2.
**NO :** Refer to inspection procedure N-1 "The interior lamps (room ramp, rear personal lamps, door lamps, luggage compartment lamp, key cylinder illumination lamp) does not illuminate or extinguish normally P.54E-248."

**Step 2. Check the rear personal lamp switches.**
Check which position (ON or DOOR) of the rear personal lamp switch does not activate the relevant lamp.

**Q: Which switch position does not activate the lamp?**
**The lamp illuminates at neither the ON or DOOR position. :** Go to Step 3.
**The lamp does not illuminate at the DOOR position. :** Go to Step 7.
**The lamp does not illuminate at the ON position. :** Go to Step 9.

**Step 3. Connectors check: E-09 (for second seat: LH), E-04 (for second seat: RH), E-08 (for third set: LH), E-06 (for third seat: RH) rear personal lamp connectors**

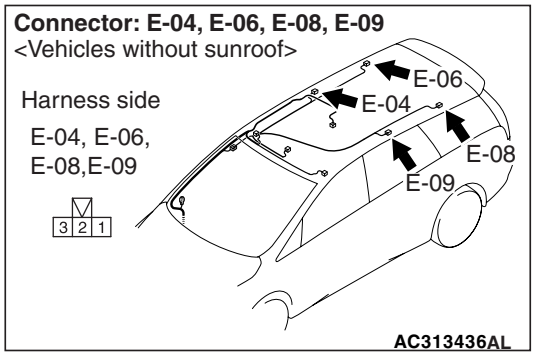


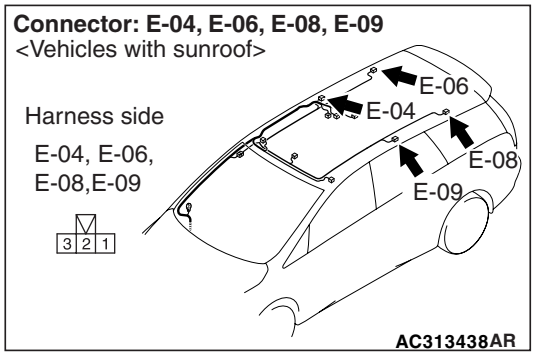


**Q: Is the check result normal?**
**YES :** Go to Step 4.
**NO :** Repair the defective connector.

**Step 4. Check the bulbs of the rear personal lamp.**
Check that the rear personal lamp bulbs are not burned out.

**Q: Is the check result normal?**
**YES :** Go to Step 5.
**NO :** Replace the rear personal lamp bulb.

Main Index
Group TOC

### Step 5. Connector check: C-219 ETACS-ECU connector

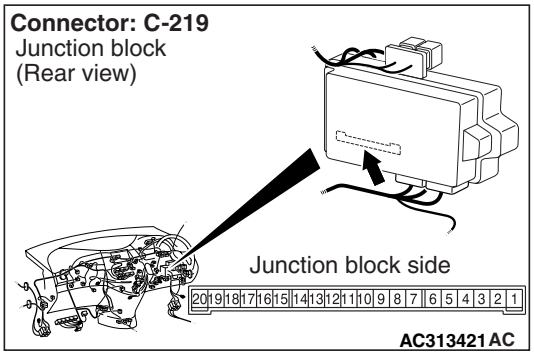


**Q: Is the check result normal?**

**YES :** Go to Step 6.

**NO :** Repair the defective connector.

### Step 6. Check the wiring harness from C-219 ETACS-ECU connector terminal No.6 to E-09 (for second seat: LH), E-04 (for second seat: RH), E-08 (for third seat: LH), E-06 (for third seat: RH) rear personal lamp connector terminal No.2.

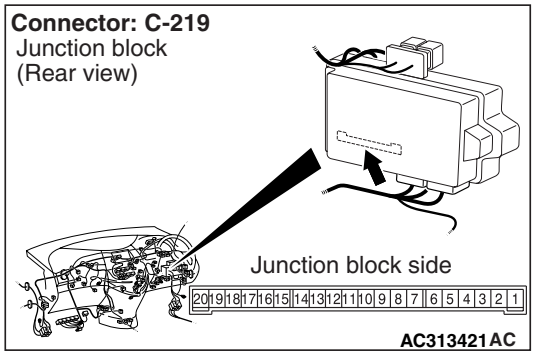


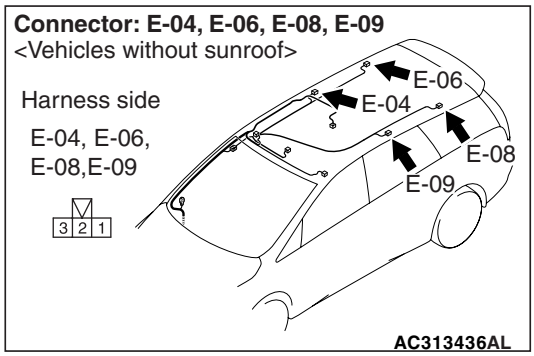


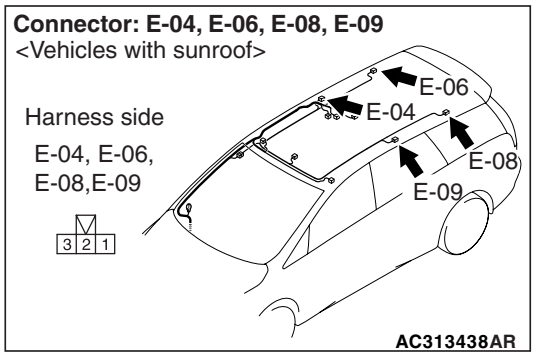

Main Index
Group TOC

*NOTE:*

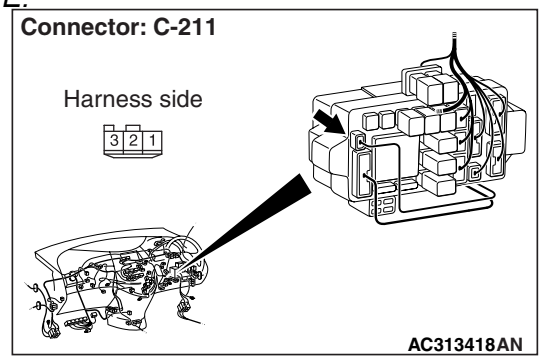


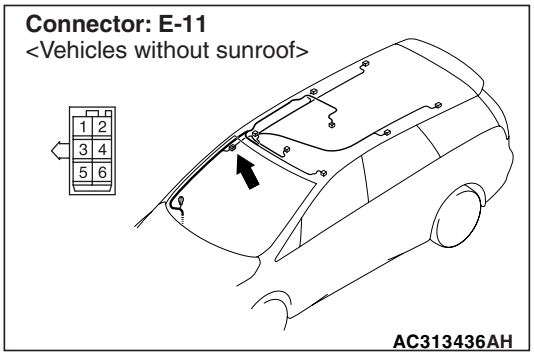


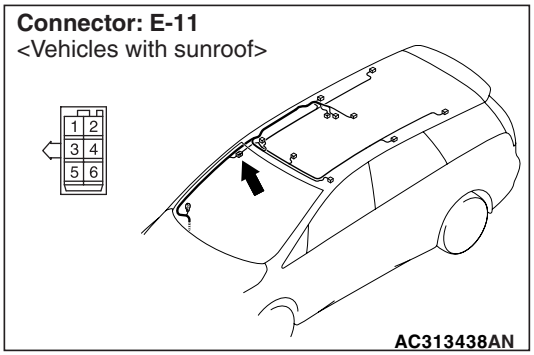


*Prior to the wiring harness inspection, check intermediate connector E-11 and junction block connector C-211, and repair if necessary.*

- Check the earth wires for open circuit.

**Q: Is the check result normal?**

**YES :** Replace the rear personal lamp.

**NO :** Repair the wiring harness.

**Step 7. Connectors check: C-219 ETACS-ECU connector, E-09 (for second seat: LH), E-04 (for second seat: RH), E-08 (for third seat: LH) and E-06 (for third seat: RH) rear personal lamp connector**

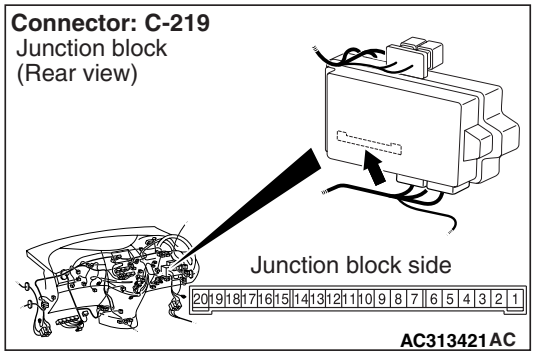


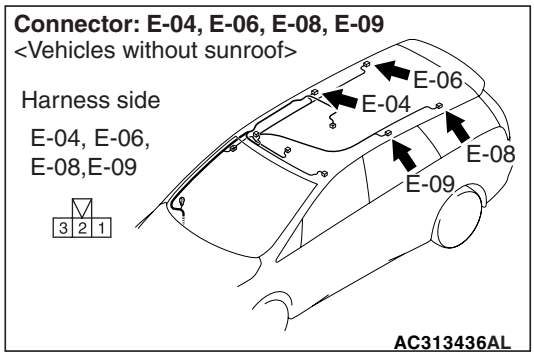


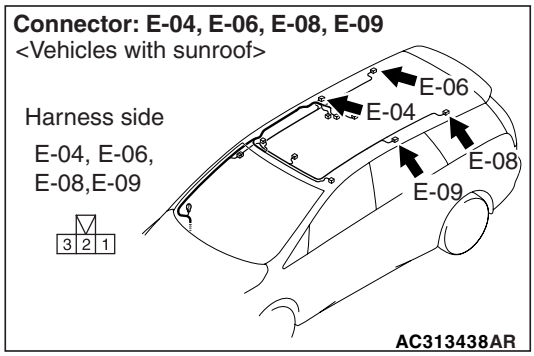


**Q: Is the check result normal?**

**YES :** Go to Step 8.

**NO :** Repair the defective connector.

**Step 8. Check the wiring harness from C-219 ETACS-ECU connector terminal No.5 to E-09 (for second seat: LH), E-04 (for second seat: RH), E-08 (for third seat: LH), E-06 (for third seat: RH) rear personal lamp connector terminal No.3.**

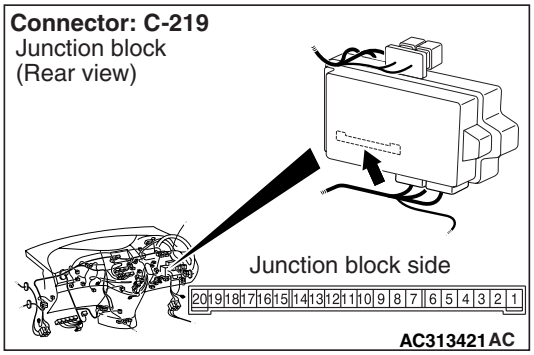


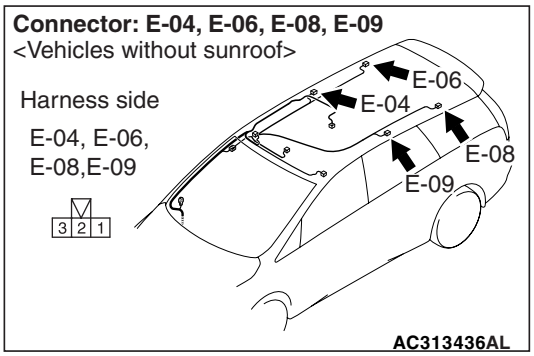


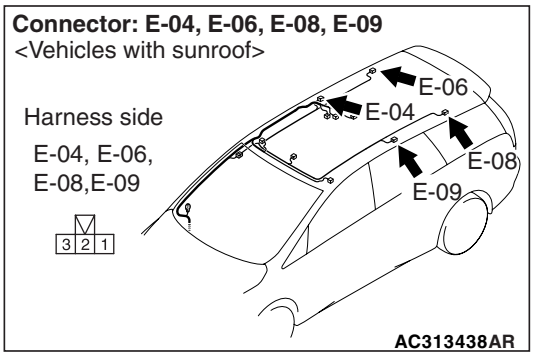


*NOTE:*

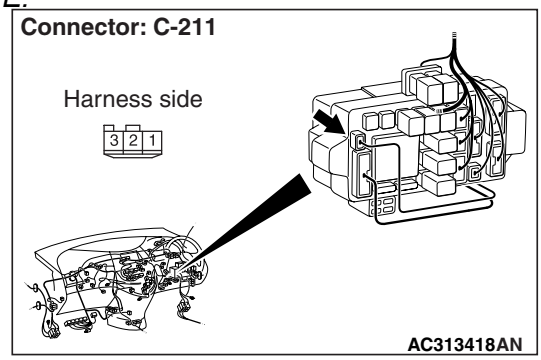


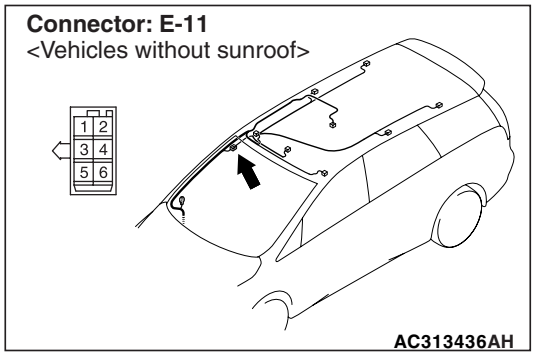


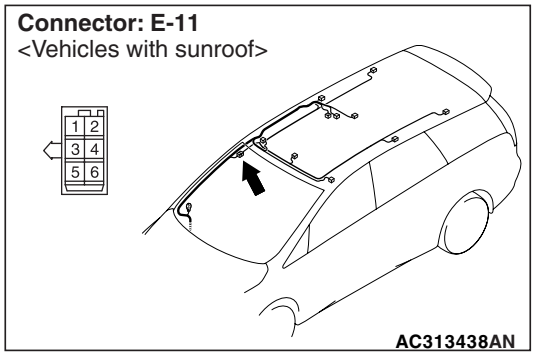


*Prior to the wiring harness inspection, check intermediate connector E-11 and junction block connector C-211, and repair if necessary.*

- Check the earth wires for open circuit.

**Q: Is the check result normal?**

**YES :** Replace the rear personal lamp.

**NO :** Repair the wiring harness.

Main Index
Group TOC

**Step 9. Connectors check: E-02 room lamp connector, E-09 (for second seat: LH), E-04 (for second seat: RH), E-08 (for third seat: LH) and E-06 (for third seat: RH) rear personal lamp connector**

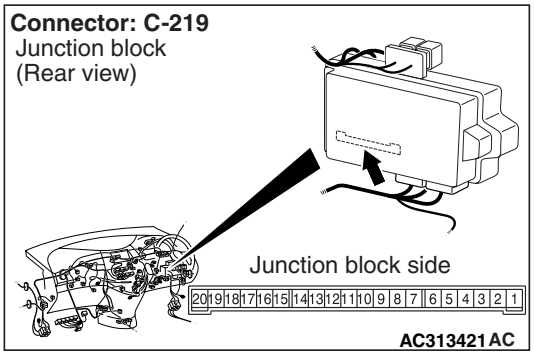


**Q: Is the check result normal?**
**YES :** Go to Step 10.
**NO :** Repair the defective connector.

**Step 10. Check the wiring harness from E-02 room lamp connector terminal No.9 to E-09 (for second seat: LH), E-04 (for second seat: RH), E-08 (for third seat: LH), E-06 (for third seat: RH) rear personal lamp connector terminal No.1.**

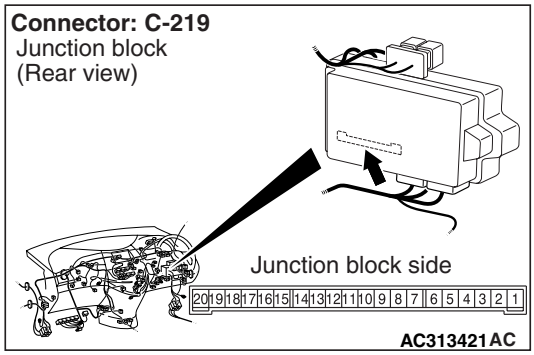


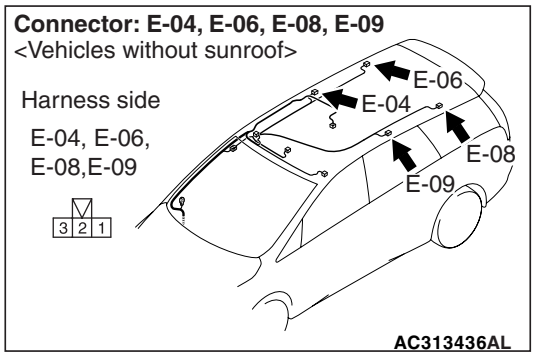


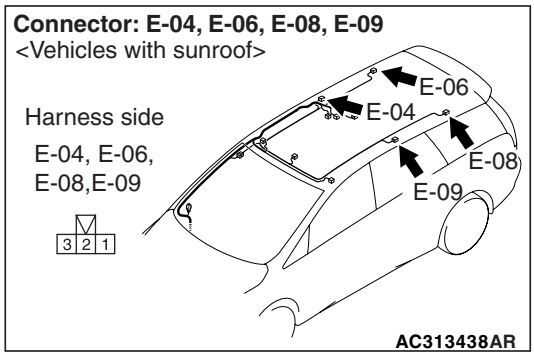


- Check the earth wires for open circuit.

**Q: Is the check result normal?**
**YES :** Replace the rear personal lamp.
**NO :** Repair the wiring harness.

Main Index
Group TOC

## INSPECTION PROCEDURE N-4: The luggage compartment lamp does not illuminate normally.

**⚠ CAUTION**
**Whenever the ECU is replaced, ensure that the input and output signal circuits are normal.**

**Luggage Compartment Lamp Circuit**

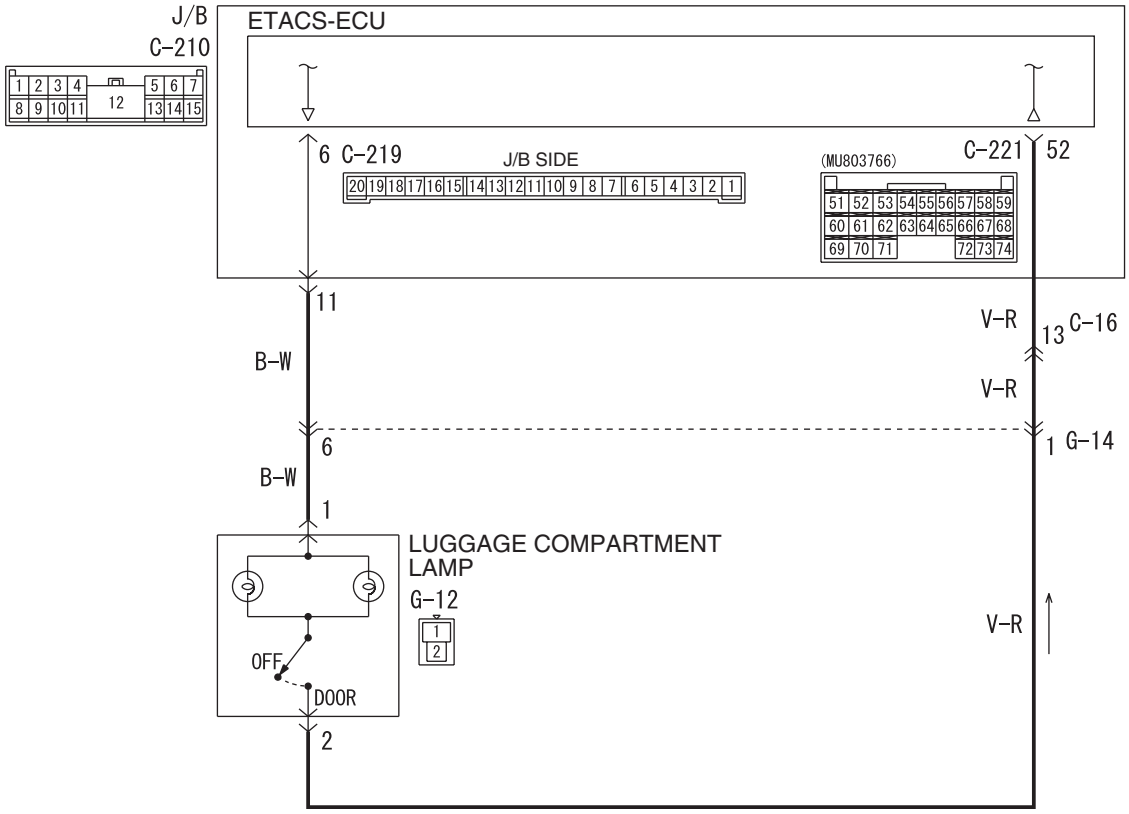


Wire colour code
B : Black LG : Light green G : Green L : Blue W : White Y : Yellow SB : Sky blue
BR : Brown O : Orange GR : Grey R : Red P : Pink V : Violet PU : Purple

W6X54X044A

## COMMENTS ON TROUBLE SYMPTOM

If the luggage compartment lamp does not turn on and off normally, wiring harness connector(s) or the bulb may be defective.

## POSSIBLE CAUSES

- Malfunction of the luggage compartment lamp bulbs
- Damaged harness wires and connectors

## DIAGNOSTIC PROCEDURE

### Step 1. Check the room lamp

Check that the room lamp illuminate and extinguish normally.

**Q: Is the check result normal?**

**YES :** Go to Step 2.

**NO :** Refer to inspection procedure N-1 "The interior lamps (room ramp, rear personal lamps, door lamps, luggage compartment lamp, key cylinder illumination lamp) does not illuminate or extinguish normally P.54E-248."

Main Index
Group TOC

### Step 2. Connector check: G-12 luggage compartment lamp connector

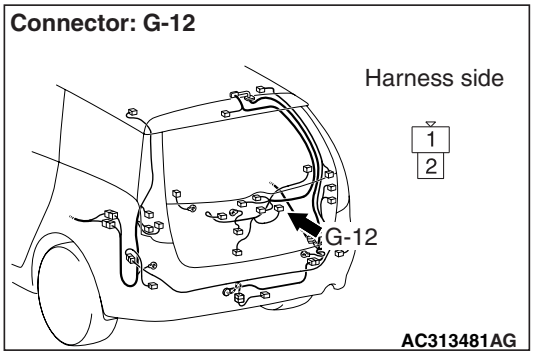


**Q: Is the check result normal?**
**YES :** Go to Step 3.
**NO :** Repair the defective connector.

### Step 3. Check the bulbs of the luggage compartment lamp.

Check that the luggage compartment lamp bulbs are not burned out.

**Q: Is the check result normal?**
**YES :** Go to Step 4.
**NO :** Replace the luggage compartment lamp bulb.

### Step 4. Connector check: C-221 ETACS-ECU connector

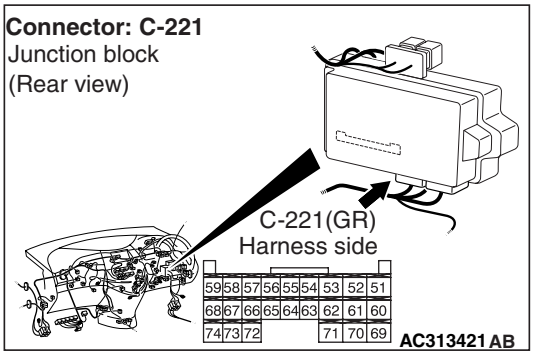


**Q: Is the check result normal?**
**YES :** Go to Step 5.
**NO :** Repair the defective connector.

### Step 5. Check the wiring harness from C-221 ETACS-ECU connector terminal No.52 to G-12 luggage compartment lamp connector terminal No.2.

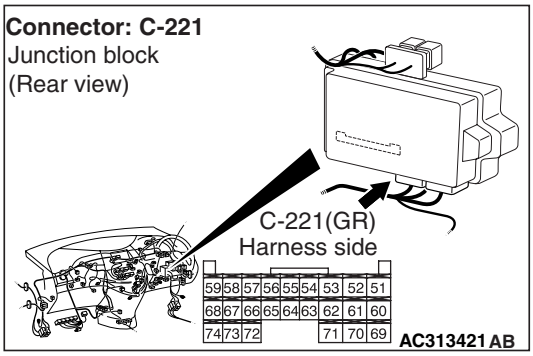


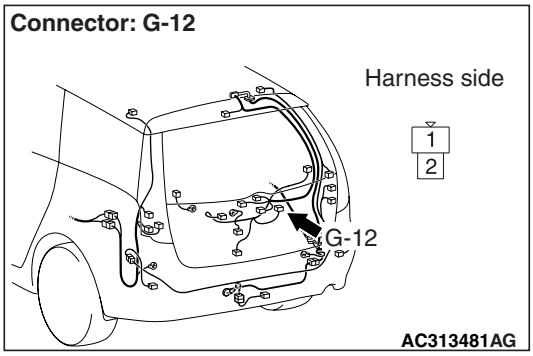


*NOTE:*

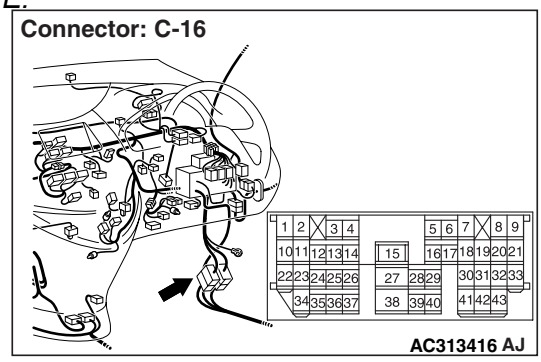


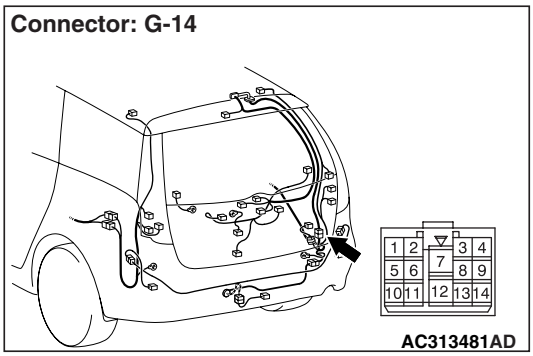


*Prior to the wiring harness inspection, check intermediate connector C-16, G-14, and repair if necessary.*

- Check the earth wires for open circuit.

**Q: Is the check result normal?**
**YES :** Go to Step 6.
**NO :** Repair the wiring harness.

Main Index
Group TOC

### Step 6. Connector check: C-219 ETACS-ECU connector

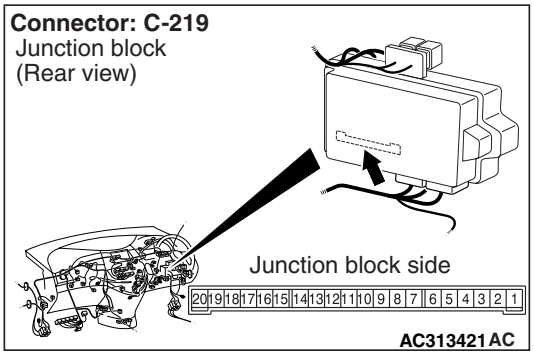


**Q: Is the check result normal?**
**YES :** Go to Step 7.
**NO :** Repair the defective connector.

### Step 7. Check the wiring harness from C-219 ETACS-ECU connector terminal No.6 to G-12 luggage compartment lamp connector terminal No.1.

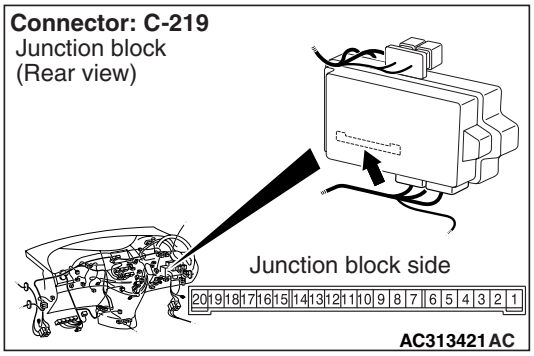


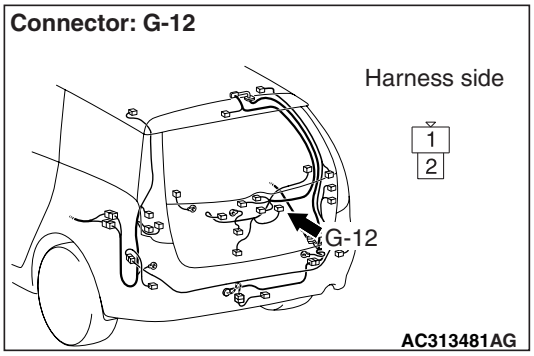


*NOTE:*

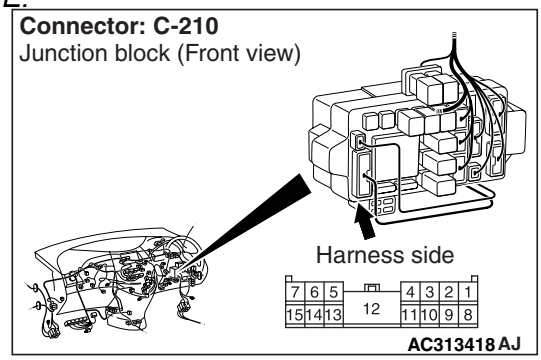


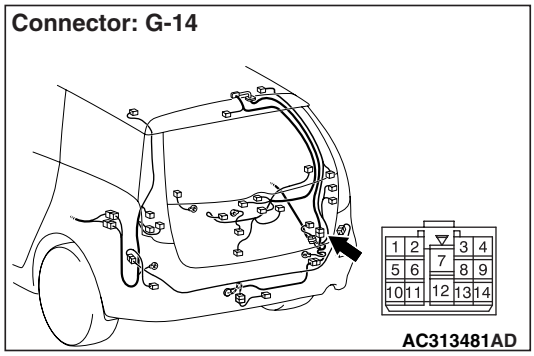


*Prior to the wiring harness inspection, check intermediate connector G-14, junction block connector C-210, and repair if necessary.*

- Check the power supply line for open circuit.

**Q: Is the check result normal?**
**YES :** Go to Step 8.
**NO :** Repair the wiring harness.

### Step 8. Retest the system.

Check that the luggage compartment lamps illuminate and extinguish normally.

**Q: Is the check result normal?**
**YES :** The trouble can be an intermittent malfunction (Refer to GROUP 00 – How to Cope with Intermittent Malfunction P.00-5).
**NO :** Replace the luggage compartment lamp.

Main Index
Group TOC

## INSPECTION PROCEDURE N-5: The door lamp does not illuminate normally.

**⚠ CAUTION**

**Whenever the ECU is replaced, ensure that the input and output signal circuits are normal.**

**Door Lamp Circuit**

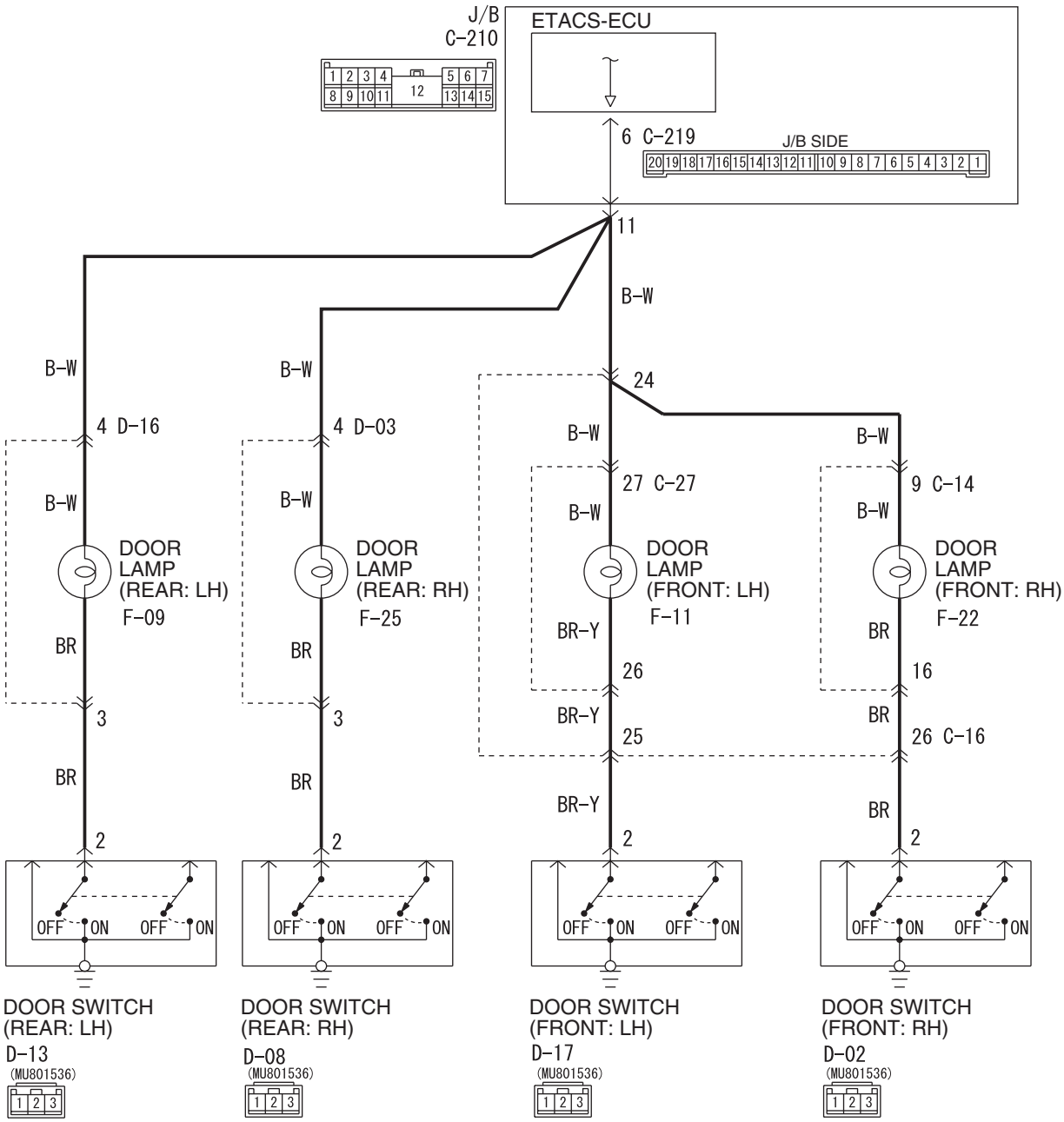


Wire colour code
B : Black LG : Light green G : Green L : Blue W : White Y : Yellow SB : Sky blue
BR : Brown O : Orange GR : Grey R : Red P : Pink V : Violet PU : Purple

W6X54X045A

Main Index
Group TOC

## COMMENTS ON TROUBLE SYMPTOM

The door lamps are energised through the ETACS-ECU. If a door is opened, the relevant door lamp will illuminate.
If this function does not work normally, these input signal circuit(s) or the ETACS-ECU may be defective.

## POSSIBLE CAUSES

- Malfunction of the door lamp bulbs
- Malfunction of the door switch
- Malfunction of the ETACS-ECU
- Damaged harness wires and connectors

## DIAGNOSTIC PROCEDURE

**Step 1. Check the room lamp**

Check that the room lamp illuminate and extinguish normally.

**Q: Is the check result normal?**

**YES :** Go to Step 2.

**NO :** Refer to inspection procedure N-1 "The interior lamps (room ramp, rear personal lamps, door lamps, luggage compartment lamp, key cylinder illumination lamp) does not illuminate or extinguish normally P.54E-248."

**Step 2. Connector check: F-11 door lamp (front: LH), F-22 door lamp (front: RH) connector, F-09 door lamp (rear: LH), F-25 door lamp (rear: RH)**

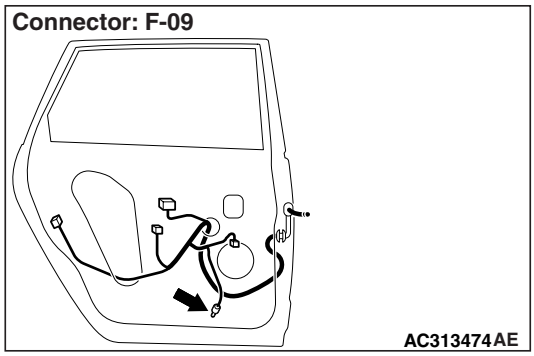


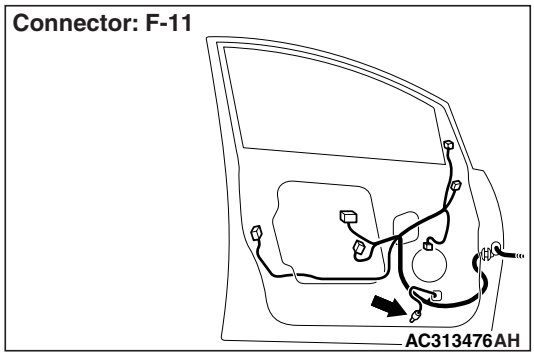


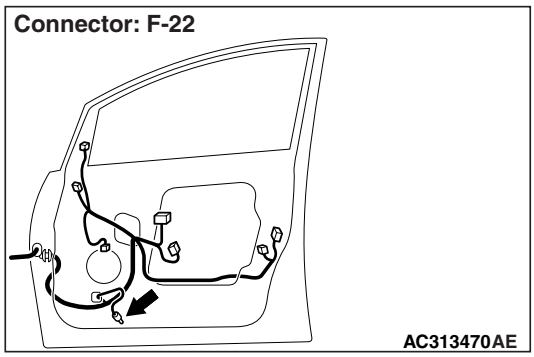


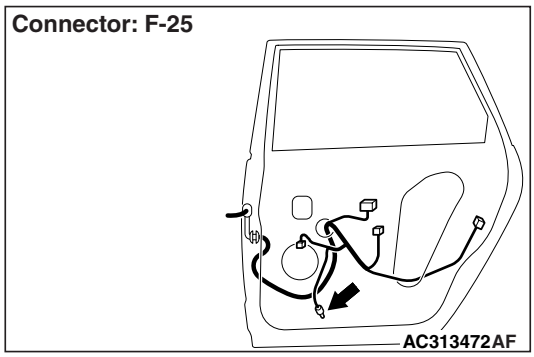


**Q: Is the check result normal?**

**YES :** Go to Step 3.

**NO :** Repair the defective connector.

Main Index
Group TOC

**Step 3. Check the bulbs of the door lamp.**
Check that the door lamp bulbs are not burned out.

**Q: Is the check result normal?**
**YES :** Go to Step 4.
**NO :** Replace the door lamp bulb.

**Step 4. Connector check: D-17 door switch (front: LH), D-02 door switch (front: RH) connector, D-13 door switch (rear: LH) connector, D-08 door switch (rear: RH) connector**

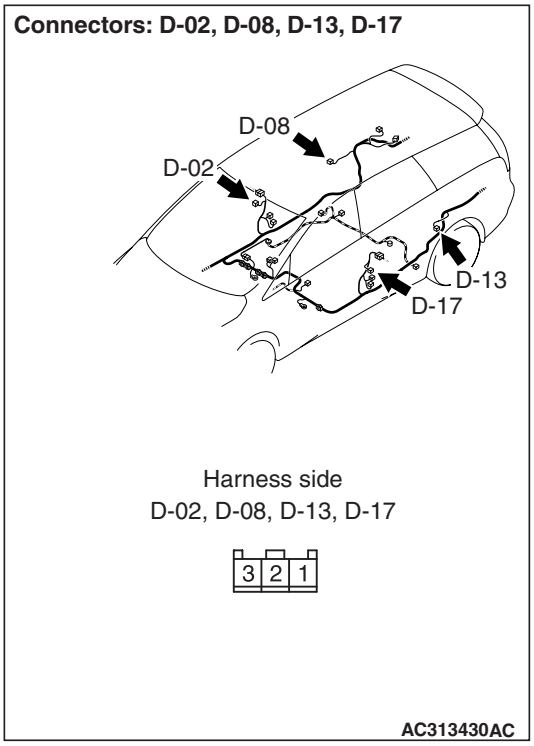


**Q: Is the check result normal?**
**YES :** Go to Step 5.
**NO :** Repair the defective connector.

**Step 5. Check the door switch.**
Check the door switch, which corresponds to the defective door lamp (Refer to GROUP 42 – Door P.42-45).

**Q: Is the check result normal?**
**YES :** Go to Step 6.
**NO :** Replace the door lamp bulb.

**Step 6. Connector check: C-219 ETACS-ECU connector**

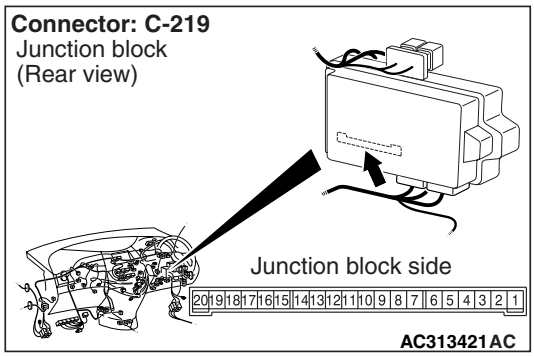


**Q: Is the check result normal?**
**YES :** Go to Step 7.
**NO :** Repair the defective connector.

Main Index
Group TOC

**Step 7. Check the wiring harness from C-219 ETACS-ECU connector terminal No.6 to D-17 door switch (front: LH) or D-02 door switch (front: RH) connector, D-13 door switch (rear: LH) connector, D-08 door switch (rear: RH) connector terminal No.2.**

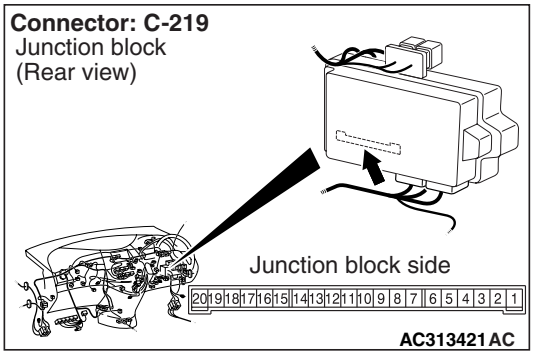


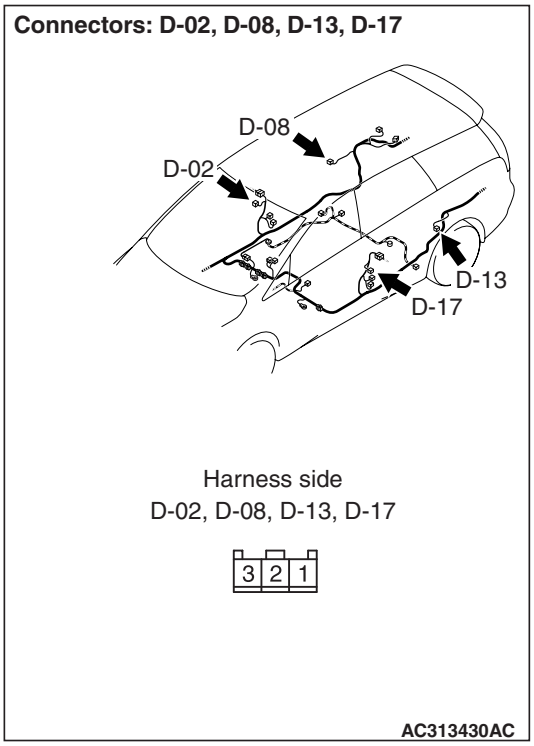


*NOTE:*

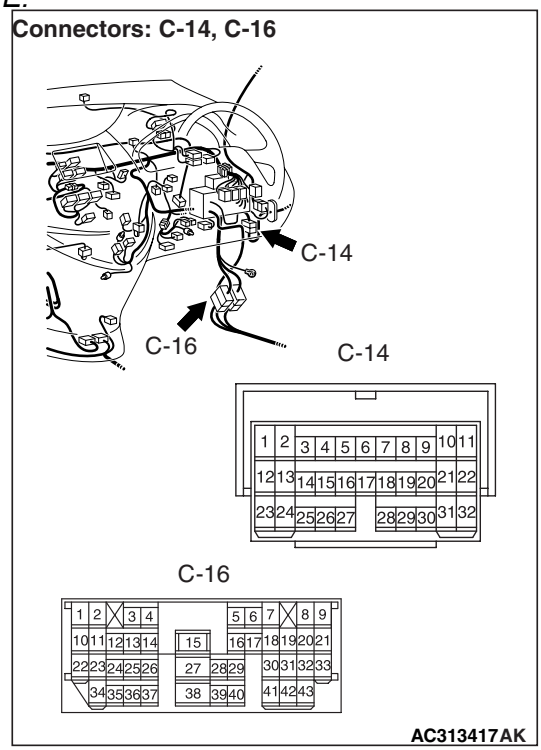


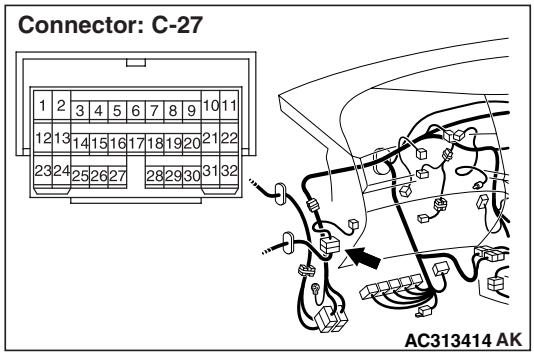


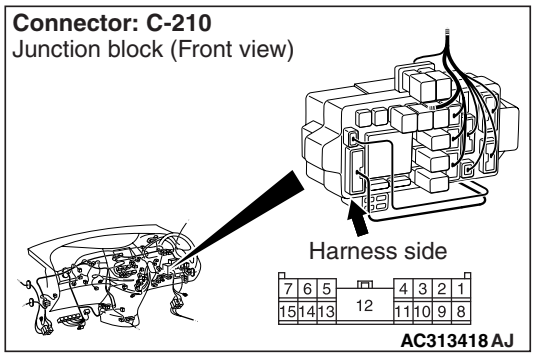

Main Index
Group TOC

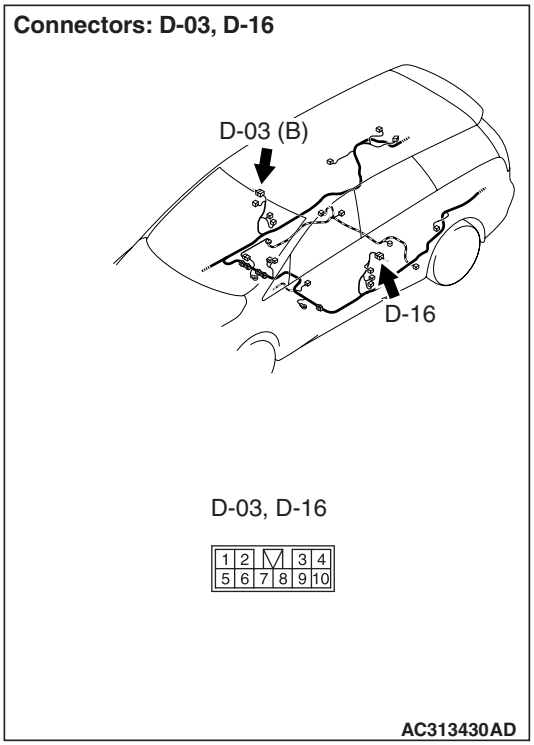


*Prior to the wiring harness inspection, check intermediate connector C-14 <door switch (front: RH)>, C-16 <door switch (front: RH) and door switch (front: LH)>, C-27 <door switch (front: LH)>, D-03 <door switch (rear: RH)>, D-16 <door switch (rear: LH)>, junction block connector C-210, and repair if necessary.*

**Q: Is the check result normal?**

**YES : .** Replace the door lamp.

**NO : .** Repair the wiring harness.

Main Index
Group TOC

## INSPECTION PROCEDURE N-6: Interior lamp automatic shutoff function does not work normally.

**⚠ CAUTION**
**Whenever the ECU is replaced, ensure that the input and output signal circuits are normal.**

**Interior Lamp Automatic Shut-off Function Circuit**

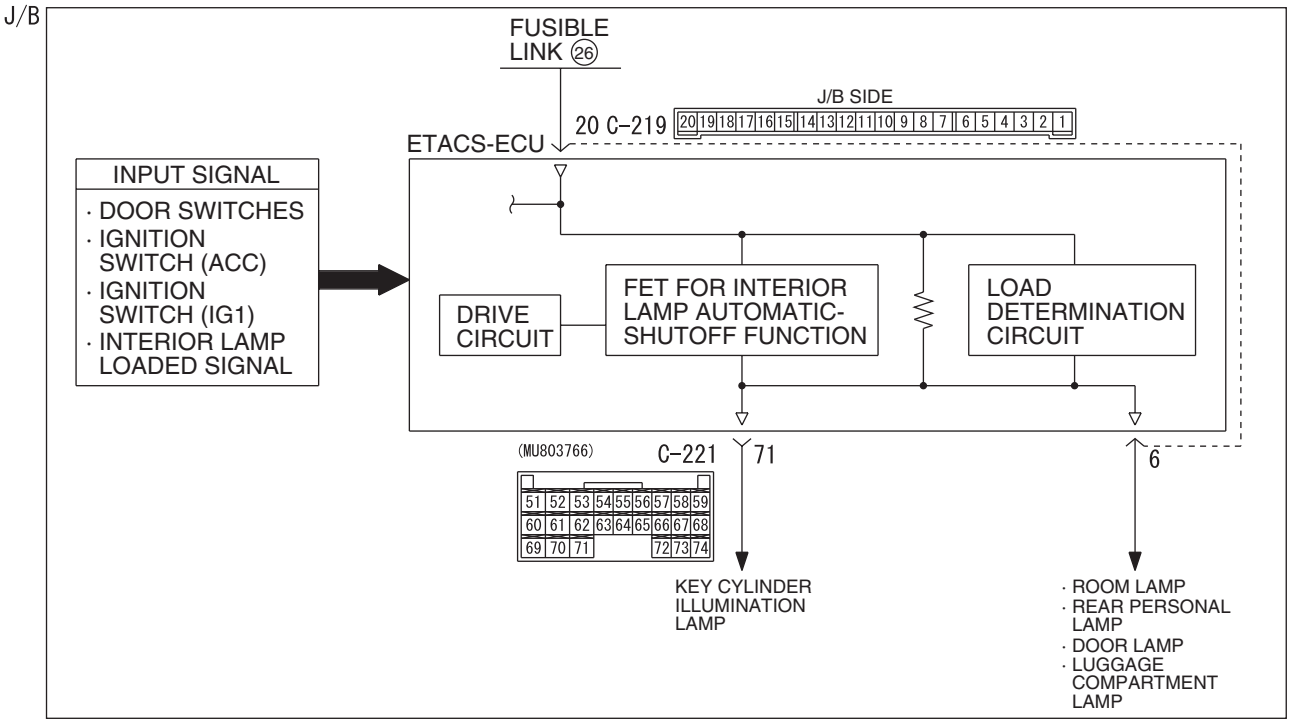


## COMMENTS ON TROUBLE SYMPTOM

The ETACS-ECU operates the interior lamp automatic-shutdown function in accordance with the input signals below.

- Ignition switch (ACC)
- Ignition switch (IG1)
- Driver's door switch
- Tailgate switch
- All of the door switches
- Interior lamp loaded signal

If this function does not work normally, these input signal circuit(s) or the ETACS-ECU may be defective. Note that this function can be disabled/enabled by the adjustment function (default setting; enabled).

## POSSIBLE CAUSES

- Malfunction of the door switches
- Malfunction of the tailgate switch
- Malfunction of the interior lamp
- Malfunction of the ETACS-ECU
- Damaged harness wires and connectors

## DIAGNOSIS PROCEDURE

**Step 1. Check the SWS monitor customised function.**

Check that the interior lamp automatic-shutdown function has been enabled by using the SWS monitor customise function.

**Q: Is the check result normal?**

**YES :** Go to Step 2.

**NO :** Enable the interior lamp automatic-shutdown function by using the SWS monitor customise function (Refer to P.54E-353).

Main Index
Group TOC

**Step 2. ECU check by using the SWS monitor**
Check that the power supply and earth lines to the ETACS-ECU and the SWS communication lines are normal.
- Ignition switch: OFF

**ECU TO BE CHECKED**
- ETACS

**OK: "OK" is displayed on the "ETACS ECU" menu.**

**Q: Is the check result normal?**
**YES :** Go to Step 3.
**NO :** Refer to Inspection Procedure A-3 "Communication with the ETACS-ECU is not possible P.54E-55."

**Step 3. SWS monitor data list.**
Check the input signals below, which are related to the interior lamp automatic-shutdown function.

**<Selected item> ETACS ECU**
- Ignition switch: OFF
- Driver's door: open

| Item No. | Item name | Normal condition |
|---|---|---|
| Item 30 | IG SW(IG1) | OFF |
| Item 31 | IG SW(ACC) | OFF |
| Item 32 | DR DOOR SW | ON |

**OK: Normal condition is displayed.**

**Q: Is the check result normal?**
**Normal conditions are displayed for all the items. :** Go to Step 4.
**Normal condition is not displayed for item No.30. :** Refer to inspection procedure P-2 "The ignition switch (IG1) signal is not received P.54E-293."
**Normal condition is not displayed for item No.31. :** Refer to inspection procedure P-1 "The ignition switch (ACC) signal is not received P.54E-291."
**Normal condition is not displayed for item No.32. :** Refer to inspection procedure P-4 "The driver's door switch signal is not received P.54E-298."

**Step 4. ETACS switch data by using the SWS monitor**
Check the ETACS-ECU signals, which are related to the interior lamp automatic shut-down function.
- Passenger's door: Close → Open

| Item No. | Item name | Normal condition |
|---|---|---|
| Item 5 | Passenger's door switch | from OFF to ON |

- Rear door (RH): Close → Open

| Item No. | Item name | Normal condition |
|---|---|---|
| Item 41 | Rear door (right side) switch | from OFF to ON |

- Rear door (LH): Close → Open

| Item No. | Item name | Normal condition |
|---|---|---|
| Item 42 | Rear door (left side) switch | from OFF to ON |

**OK: Normal conditions displayed for all the items.**

**Q: Is the check result normal?**
**Normal conditions are displayed for all the items. :** Go to Step 5.
**Normal condition is not displayed for item No.05, 41 or 42 :** Refer to inspection procedure P-12 "All the door switch signals are not received P.54E-316."

**Step 5. Pulse check**
Check the input signals below, which are related to the interior lamp automatic-shutdown function.

| System switch | Check condition |
|---|---|
| Tailgate switch | Tailgate is opened while all the other doors are closed |
| Interior lamp loaded signal | When a load is applied through multi-purpose fuse No.18 |

**OK: The M.U.T.-III sounds or the voltmeter needle fluctuates.**

**Q: Is the check result normal?**
**All the signals are received normally. :** Go to Step 6.
**Tailgate switch signal is not received. :** Refer to inspection procedure P-12 "All the door switch signals are not received P.54E-316."
**The interior lamp loaded signal is not received. :** Refer to inspection procedure P-20 "Interior lamp loaded signal is not detected P.54E-340."

Main Index
Group TOC

**Step 6. Retest the system.**
Check that the interior lamp automatic-shutdown function works normally.

**Q: Is the check result normal?**
**YES :** The trouble can be an intermittent malfunction (Refer to GROUP 00 – How to Cope with Intermittent Malfunction P.00-5).
**NO :** Replace the ETACS-ECU.

## INSPECTION PROCEDURE N-7: The door-ajar warning lamp does not illuminate/extinguish normally.

**⚠ CAUTION**
**Whenever the ECU is replaced, ensure that the input and output signal circuits are normal.**

**Door-Ajar Warning Lamp Function**

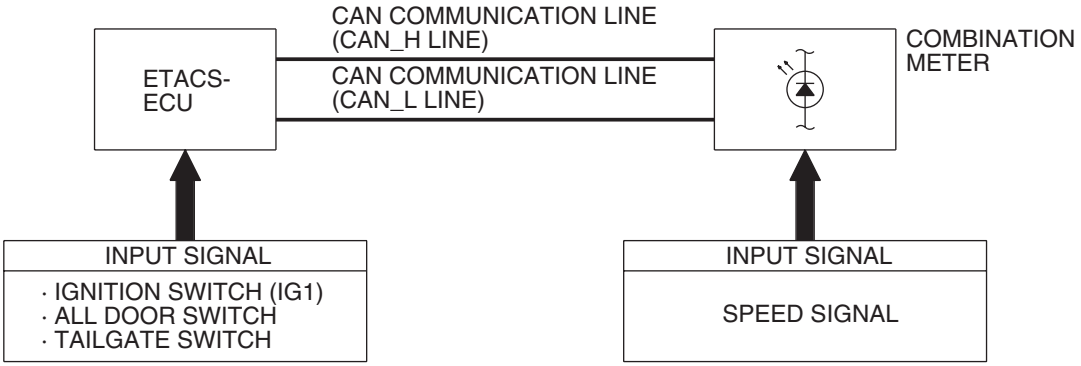


W4X54E219A

## COMMENTS ON TROUBLE SYMPTOM

If the door-ajar warning lamp does not work normally, the input signal circuit or the ETACS-ECU may be defective.

## POSSIBLE CAUSES

- The combination meter may be defective
- The CAN bus line is defective.
- The ETACS-ECU may be defective
- Damaged harness wires and connectors

## DIAGNOSIS PROCEDURE

**Step 1. Check the door lamp.**
When the door is opened or closed, check that the door lamp illuminate/go off normally.

**Q: Is the check result normal?**
**YES :** Go to Step 2.
**NO :** Refer to Inspection Procedure N-5 "The door lamp does not illuminate normally P.54E-268."

**Step 2. M.U.T.-III CAN bus diagnostics.**
Use the M.U.T.-III to diagnose the CAN bus lines.

**Q: Is the check result normal?**
**YES :** Go to Step 3.
**NO :** Repair the CAN bus line (Refer to GROUP 54F, Diagnosis P.54F-13).

Main Index
Group TOC

**Step 3. Check for combination meter diagnosis code.**

Check whether the combination meter-related diagnosis code is set.

**Q: Is the diagnosis code set?**

**YES :** Diagnose the combination meter (Refer to GROUP 54A – Troubleshooting P.54A-12).

**NO :** Go to Step 4.

**Step 4. ECU check by using the SWS monitor**

Check that the power supply and earth lines to the ETACS-ECU and the SWS communication lines are normal.

- Ignition switch: OFF

**ECUS TO BE CHECKED**

- ETACS ECU

**OK: "OK" is displayed on the "ETACS ECU" menu.**

**Q: Is the check result normal?**

**YES :** Go to Step 5.

**NO :** Refer to Inspection Procedure A-3 "Communication with the ETACS-ECU is not possible P.54E-55."

**Step 5. SWS monitor data list.**

**<Selected item> ETACS ECU**

- Driver's door: open

| Item No. | Item name | Normal condition |
|---|---|---|
| Item 32 | DR DOOR SW | ON |

**OK: Normal condition is displayed.**

**Q: Is the check result normal?**

**YES :** Go to Step 6.

**NO :** Refer to inspection procedure P-4 "The driver's door switch signal is not received P.54E-298."

**Step 6. ETACS switch data by using the SWS monitor**

Check the SWS communication signal, which is related to the door-ajar warning lamp.

- Passenger's door: Open

| Item No. | Item name | Normal condition |
|---|---|---|
| Item 5 | Passenger's door switch | ON |

- Rear door (RH): Open

| Item No. | Item name | Normal condition |
|---|---|---|
| Item 41 | Rear door (right side) switch | ON |

- Rear door (LH): Open

| Item No. | Item name | Normal condition |
|---|---|---|
| Item 42 | Rear door (left side) switch | ON |

**OK: Normal conditions displayed for all the items.**

**Q: Is the check result normal?**

**YES :** Go to Step 7.

**NO :** Refer to inspection procedure P-12 "All the door switch signals are not received P.54E-316."

**Step 7. Pulse check**

Check the input signals below, which are related to the Door-ajar warning lamp.

| System switch | Check condition |
|---|---|
| Tailgate switch | Tailgate is opened while all the other doors are closed |

**OK: The M.U.T.-III sounds or the voltmeter needle fluctuates.**

**Q: Is the check result normal?**

**YES :** Go to Step 8.

**NO :** Refer to inspection procedure P-12 "All the door switch signals are not receivedP.54E-316."

Main Index
Group TOC

**Step 8. ETACS ANALOG data by using the SWS monitor.**

Check the ETACS-ECU signal related to the door-ajar warning lamp.

- Set the simulated vehicle speed at approximately 10km/h.

| Item No. | Item name | Normal condition |
|---|---|---|
| Item 3 | Vehicle speed | 8 to 10 km/h |

**OK: Normal condition is displayed.**

**Q: Is the check result normal?**

**YES :** Go to Step 9.

**NO :** Refer to inspection procedure P-21 "The vehicle speed signal is not received P.54E-343."

**Step 9. M.U.T.-III actuator test**

Perform the actuator test for the combination meter, and check that the door-ajar warning lamp illuminates (Refer to GROUP 54A – Combination Meter P.54A-95).

**Q: Is the check result normal?**

**YES :** Replace the ETACS-ECU.

**NO :** Replace the combination meter.

Main Index
Group TOC

# SECURITY ALARM

## INSPECTION PROCEDURE O-1: The security alarm is not armed (the security indicator lamp does not illuminate).

**⚠ CAUTION**
**Whenever the ECU is replaced, ensure that the input and output signal circuits are normal.**

**Security Indicator Lamp Circuit**

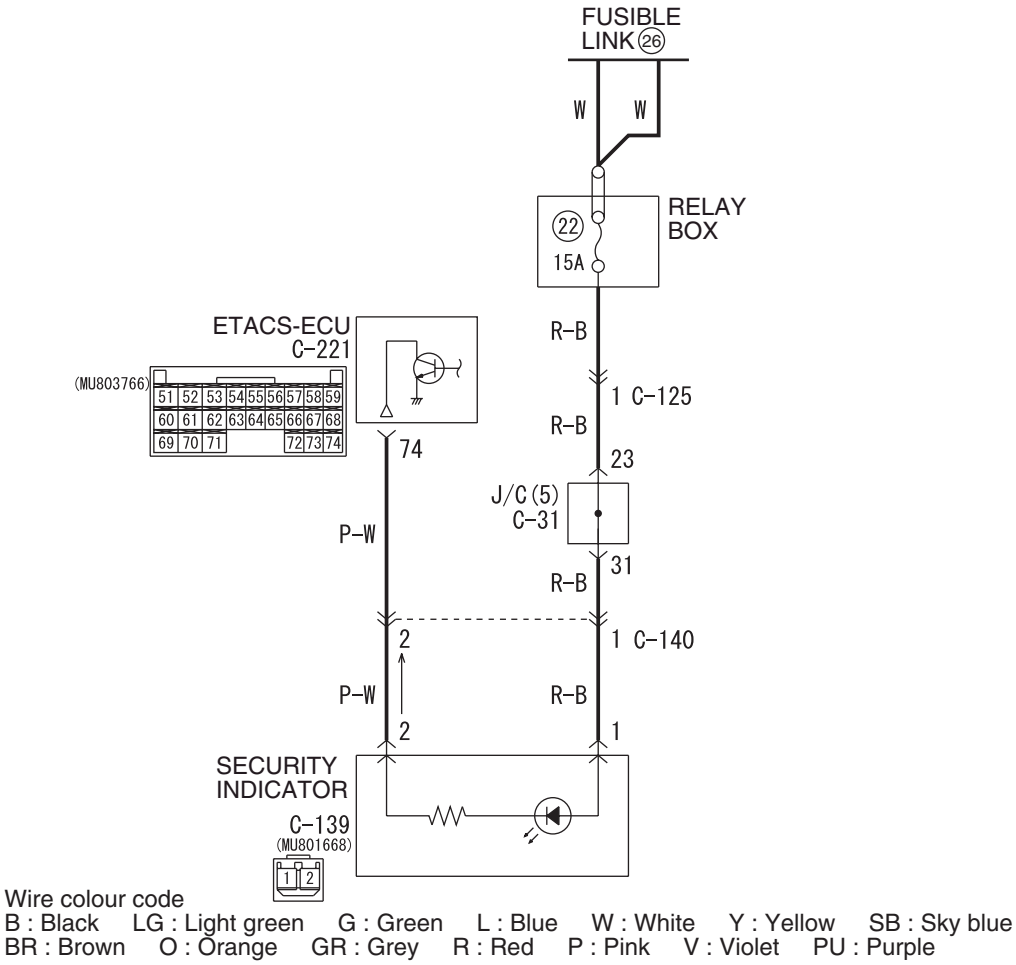


## COMMENTS ON TROUBLE SYMPTOM

If this function does not work normally, the input signal circuit(s) below, the security indicator, or the ETACS-ECU may be defective. Also, the security alarm function may have been disabled with a customisation function.

- Keyless entry transmitter
- Key reminder switch
- Ignition switch (ACC)
- Hood switch

## POSSIBLE CAUSES

- The security indicator is defective.
- Malfunction of the ETACS-ECU
- Damaged harness wires and connectors

Main Index
Group TOC

## DIAGNOSIS PROCEDURE

**Step 1. Check the operation of the keyless entry system.**

Check that the keyless entry system works normally.

**Q: Is the check result normal?**

**YES :** Go to Step 2.

**NO :** Refer to inspection procedure E-1 "Keyless entry system does not work P.54E-132."

**Step 2. Customise function by using the SWS monitor.**

Use the SWS monitor customisation function to confirm that "Security alarm function" is set to "Horn/Hazard".

**Q: Is the check result normal?**

**YES :** Go to Step 3.

**NO :** Use the SWS monitor customisation function to set "Security alarm function" to "Horn/Hazard" (Refer to P.54E-353).

**Step 3. SWS monitor data list**

Check the SWS communication input signals, which are related to the security alarm.

**<Selected item> ETACS ECU**

- Turn the ignition switch to the ACC position.

| Item No. | Item name | Normal conditions |
|---|---|---|
| Item 31 | IG SW(ACC) | ON |

**OK: Normal condition is displayed.**

**Q: Is the check result normal?**

**YES :** Go to Step 4.

**NO :** Refer to inspection procedure P-1 "The ignition switch (ACC) signal is not received P.54E-291."

**Step 4. ETACS switch data by using the SWS monitor**

Check the ETACS-ECU signals, which are related to the security alarm.

- Ignition switch: OFF (key inserted)
- Hood: close

| Item No. | Item name | Normal condition |
|---|---|---|
| Item 3 | Key reminder switch | OFF |
| Item 13 | Hood switch | OFF |

**OK: Normal conditions are displayed for all the items.**

**Q: Is the check result normal?**

**Normal conditions are displayed for all the items :** Go to Step 5.

**Normal condition is not displayed for item No.03. :** Refer to inspection procedure P-10 "The key reminder switch signal is not received P.54E-310."

**Normal condition is not displayed for item No.13. :** Refer to inspection procedure P-18 "The hood switch signal is not received P.54E-336."

**Step 5. Connector check: C-139 security indicator connector**

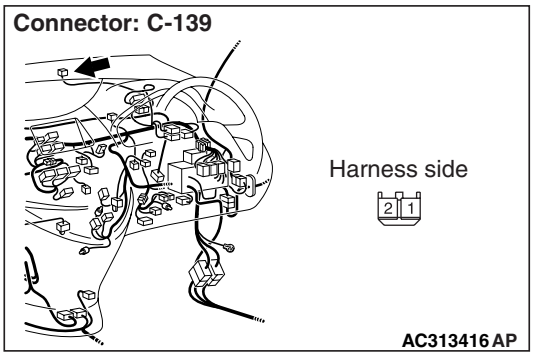


**Q: Is the check result normal?**

**YES :** Go to Step 6.

**NO :** Repair the defective connector.

**Step 6. Checking the security indicator**

Check that the security indicator is normal.

**Q: Is the check result normal?**

**YES :** Go to Step 7.

**NO :** Replace the security indicator.

Main Index
Group TOC

**Step 7. Voltage measurement at the C-139 security indicator connector.**

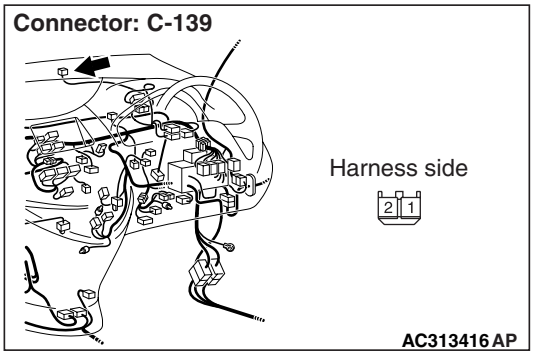


(1) Disconnect the connector, and measure at the wiring harness side.

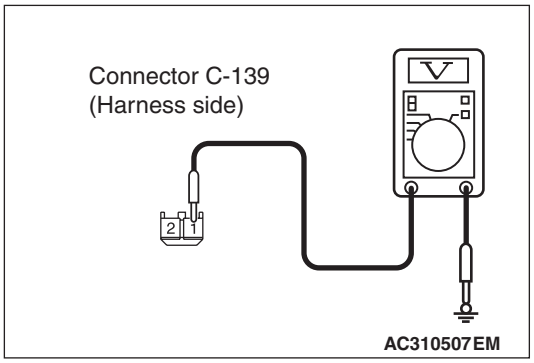


(2) Voltage between C-139 security indicator connector No.1 and body earth

**OK: System voltage**

**Q: Is the check result normal?**

**YES :** Go to Step 9.

**NO :** Go to Step 8.

**Step 8. Check the wiring harness between C-139 security indicator connector terminal No.1 to fusible link (26).**

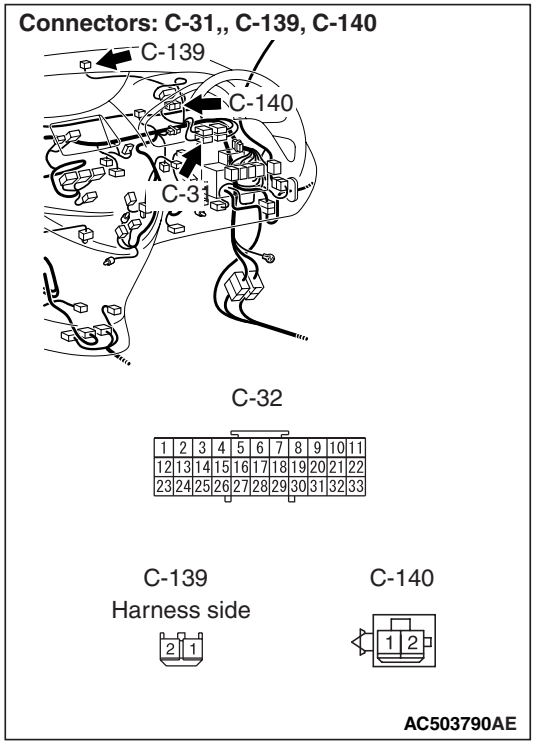


*NOTE:*

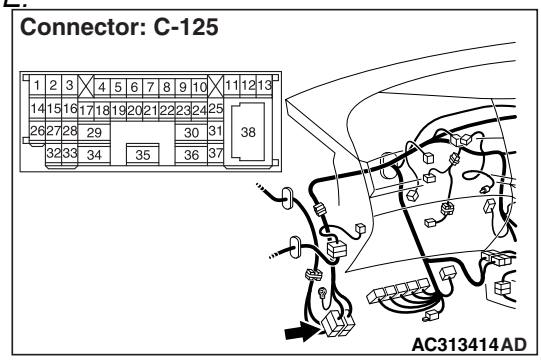


*Prior to the wiring harness inspection, check intermediate connectors C-125, C-140, joint connector C-31, and repair if necessary.*

- Check the power supply line for open circuit.

**Q: Is the check result normal?**

**YES :** The trouble can be an intermittent malfunction (Refer to GROUP 00 – How to Cope with Intermittent Malfunction P.00-5).

**NO :** Repair the wiring harness.

Main Index
Group TOC

### Step 9. Connector check: C-221 ETACS-ECU connector

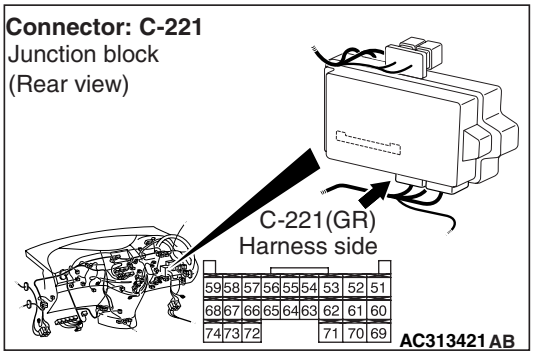


**Q: Is the check result normal?**
**YES :** Go to Step 10.
**NO :** Repair the defective connector.

### Step 10. Check the wiring harness from C-221 ETACS-ECU connector terminal No.74 to C-139 security indicator connector terminal No.2.

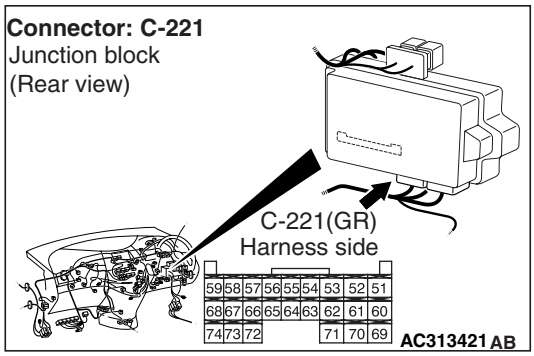


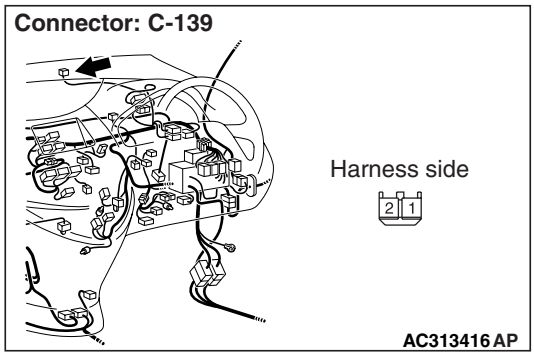


*NOTE:*

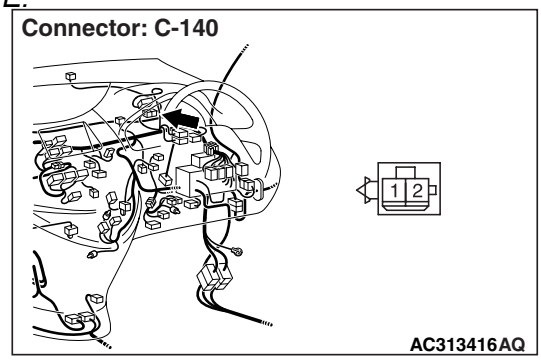


*Prior to the wiring harness inspection, check intermediate connectors C-140, and repair if necessary.*

- Check the input and output lines for open or short circuit.

**Q: Is the check result normal?**
**YES :** Go to Step 11.
**NO :** Repair the wiring harness.

### Step 11. Retest the system.

Check that the security alarm works normally.

**Q: Is the check result normal?**
**YES :** The trouble can be an intermittent malfunction (Refer to GROUP 00 – How to Cope with Intermittent Malfunction P.00-5).
**NO :** Replace the ETACS-ECU.

Main Index
Group TOC

**INSPECTION PROCEDURE O-2: The interior alarm does not work normally while the security alarm is triggered.**

**⚠ CAUTION**
**Whenever the ECU is replaced, ensure that the input and output signal circuits are normal.**

**Security Alarm Function (Interior Alarm)**

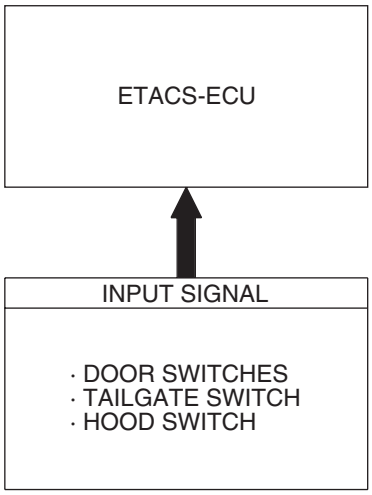


W4X54X116A

## COMMENTS ON TROUBLE SYMPTOM

If the interior alarm does not work normally, the input signal circuits to the components below or the ETACS-ECU may be defective. Also, the security alarm function may have been disabled with a customisation function.

- Hood switch
- All of the door switches

## POSSIBLE CAUSES

- The hood switch is defective.
- All the door switches are defective.
- Malfunction of the ETACS-ECU
- Damaged harness wires and connectors

## DIAGNOSIS PROCEDURE

**Step 1. Customise function by using the SWS monitor.**
Use the SWS monitor customisation function to confirm that "Security alarm function" is set to "Horn/Hazard".

**Q: Is the check result normal?**
**YES :** Go to Step 2.
**NO :** Use the SWS monitor customisation function to set "Security alarm function" to "Horn/Hazard" (Refer to P.54E-353).

**Step 2. ECU check by using the SWS monitor.**
Check that the power supply and earth lines to the ETACS-ECU and the SWS communication lines are normal.

- Ignition switch: OFF

**ECU TO BE CHECKED**

- ETACS ECU

**OK: "OK" is displayed on the "ETACS ECU" menu.**

**Q: Is the check result normal?**
**YES :** Go to Step 3.
**NO :** Refer to Inspection Procedure A-3 "Communication with the ETACS-ECU is not possible P.54E-55."

Main Index
Group TOC

**Step 3. SWS monitor data list**

Check the SWS communication input signals, which are related to the security alarm.

**<Selected item> ETACS ECU**

- Driver's door: Lock → Unlock

| Item No. | Item name | Normal conditions |
|---|---|---|
| Item 32 | DR DOR SW | from OFF to ON |

**OK: Normal condition is displayed.**

**Q: Is the check result normal?**

**YES :** Go to Step 4.

**NO :** Refer to inspection procedure P-4 "The driver's door switch signal is not received P.54E-298."

**Step 4. ETACS switch data by using the SWS monitor**

Check the ETACS-ECU signals, which are related to the security alarm.

- Doors other than the driver's door: Closed to open
- Hood: open

| Item No. | Item name | Normal conditions |
|---|---|---|
| Item 5 | Passenger's door switch | from OFF to ON |
| Item 13 | Hood switch | ON |
| Item 41 | Rear door (right side) switch | from OFF to ON |
| Item 42 | Rear door (left side) switch | from OFF to ON |

**OK: Normal conditions are displayed for all the items.**

**Q: Are the check result normal?**

**Normal conditions are displayed for all the items :** Go to Step 5.

**Normal condition is not displayed for item No.05, No.41 or No.42 :** Refer to inspection procedure P-12 "All the door switch signals are not received P.54E-316."

**Normal condition is not displayed for item No.13 :** Refer to Inspection Procedure P-18 "The hood switch signal is not received P.54E-336."

**Step 5. Retest the system.**

Check that the security alarm works normally.

**Q: Is the check result normal?**

**YES :** The trouble can be an intermittent malfunction (Refer to GROUP 00 – How to Cope with Intermittent Malfunction P.00-5).

**NO :** Replace the ETACS-ECU.

Main Index
Group TOC

**INSPECTION PROCEDURE O-3: The hazard warning lights do not flash while the security alarm is triggered.**

⚠ **CAUTION**
**Whenever the ECU is replaced, ensure that the input and output signal circuits are normal.**

## COMMENTS ON TROUBLE SYMPTOM

If the hazard warning lights do not flash normally, the ETACS-ECU may be defective. Also, the security alarm function may have been disabled with a customisation function.

## POSSIBLE CAUSES

- Malfunction of the ETACS-ECU
- Damaged harness wires and connectors

## DIAGNOSIS PROCEDURE

**Step 1. Check that the hazard warning lights operate.**
Check that the hazard lamps illuminate normally.

**Q: Is the check result normal?**
**YES :** Go to Step 2.
**NO :** Refer to inspection procedure L-2 "The hazard warning lamps do not illuminate P.54E-226."

**Step 2. Customise function by using the SWS monitor.**
Use the SWS monitor customisation function to confirm that "Security alarm function" is set to "Horn/Hazard".

**Q: Is the check result normal?**
**YES :** Go to Step 3.
**NO :** Use the SWS monitor customisation function to set "Security alarm function" to "Horn/Hazard" (Refer to P.54E-353).

**Step 3. Retest the system.**
Check that the security alarm works normally.

**Q: Is the check result normal?**
**YES :** The trouble can be an intermittent malfunction (Refer to GROUP 00 – How to Cope with Intermittent Malfunction P.00-5).
**NO :** Replace the ETACS-ECU.

Main Index
Group TOC

## INSPECTION PROCEDURE O-4: The horns do not sound while the security alarm is triggered.

**⚠ CAUTION**
**Whenever the ECU is replaced, ensure that the input and output signal circuits are normal.**

**Security Alarm Circuit (Horn Circuit)**

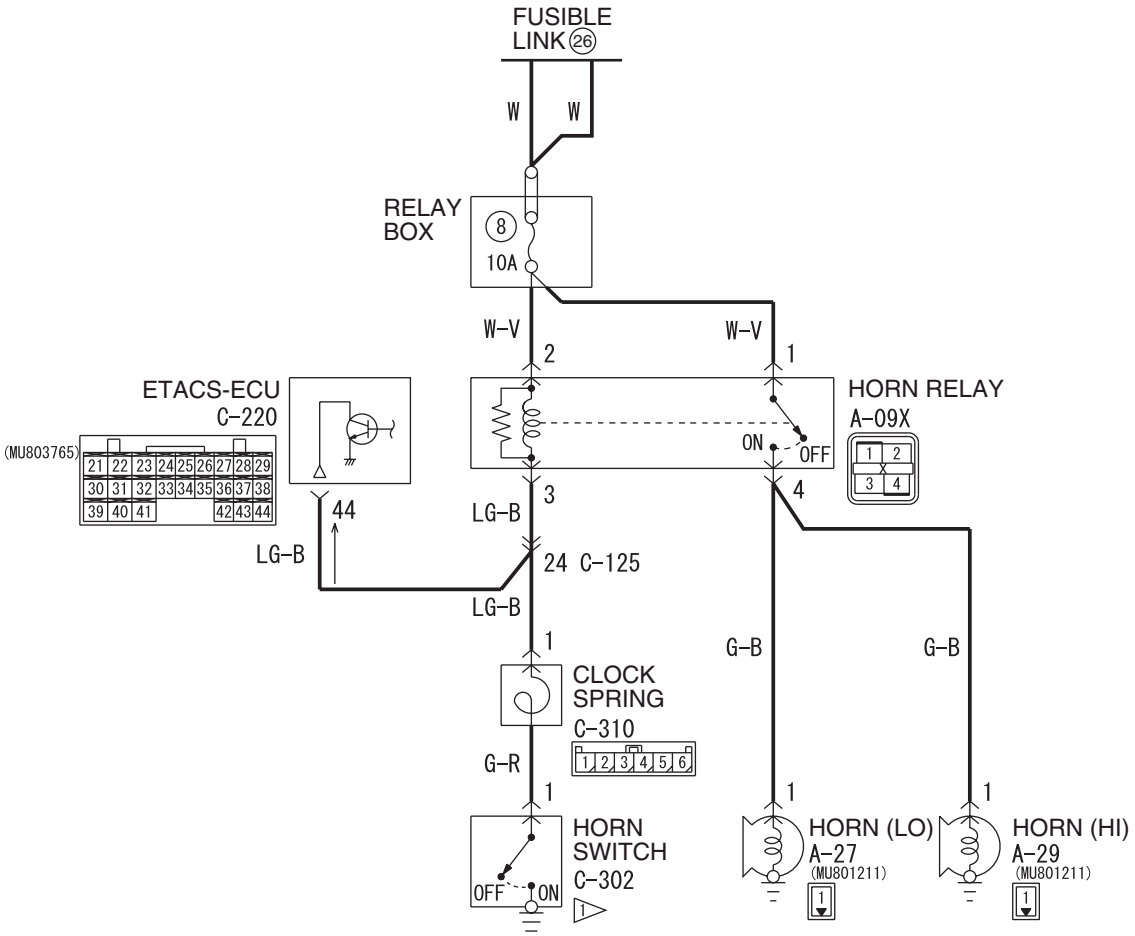


Wire colour code
B : Black LG : Light green G : Green L : Blue W : White Y : Yellow SB : Sky blue
BR : Brown O : Orange GR : Gray R : Red P : Pink V : Violet

W4X54X117A

## COMMENTS ON TROUBLE SYMPTOM

If the horns do not sound, the horn input signal circuit or the ETACS-ECU may be defective. Also, with a customisation function, the security alarm may have been set to "Horn/Hazard".

## POSSIBLE CAUSES

- The horn is defective.
- The horn relay is defective.
- Malfunction of the ETACS-ECU
- Damaged harness wires and connectors

## DIAGNOSIS PROCEDURE

**Step 1. Check that the horns sound.**
Check that the horn sounds when the horn switch is operated.

**Q: Is the check result normal?**
**YES :** Go to Step 2.
**NO :** Go to Step 7.

Main Index
Group TOC

**Step 2. Customise function by using the SWS monitor.**

Use the SWS monitor customisation function to confirm that "Security alarm function" is set to "Horn/Hazard".

**Q: Is the check result normal?**

**YES :** Go to Step 3.

**NO :** Use the SWS monitor customisation function to set "Security alarm function" to "Horn/Hazard" (Refer to P.54E-353).

**Step 3. ECU check by using the SWS monitor.**

Check that the power supply and earth lines to the ETACS-ECU and the SWS communication lines are normal.

- Ignition switch: OFF

**ECU TO BE CHECKED**

- ETACS ECU

**OK: "OK" is displayed on the "ETACS ECU" menu.**

**Q: Is the check result normal?**

**YES :** Go to Step 4.

**NO :** Refer to Inspection Procedure A-3 "Communication with the ETACS-ECU is not possible P.54E-55."

**Step 4. Connector check: A-09X horn relay connector and C-220 ETACS-ECU connector**

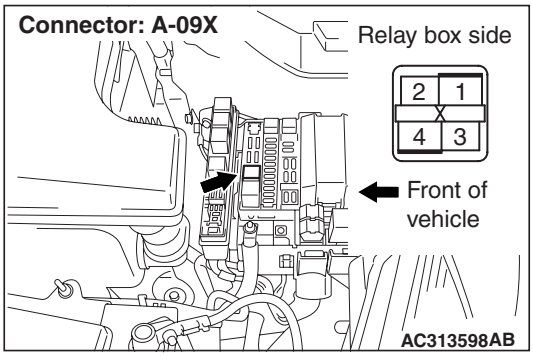


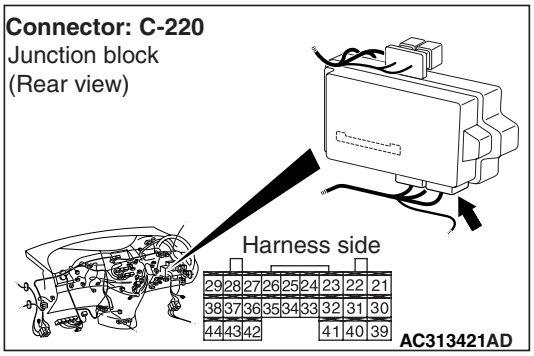


**Q: Are the check result normal?**

**YES :** Go to Step 5.

**NO :** Repair the defective connector.

**Step 5. Check the wiring harness between A-09X horn relay connector terminal No. 3 to C-220 ETACS-ECU connector terminal No. 44.**

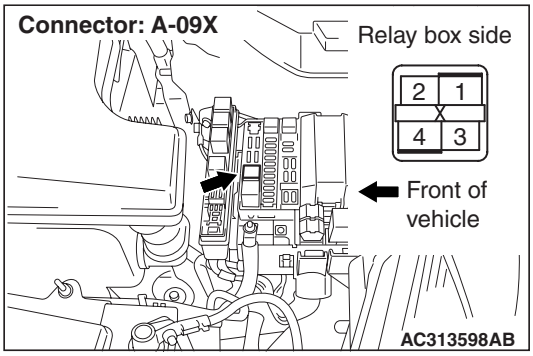


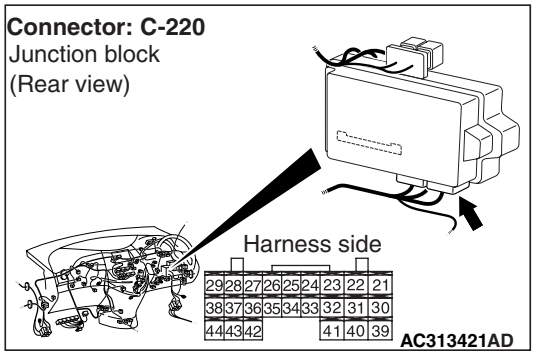


*NOTE:*

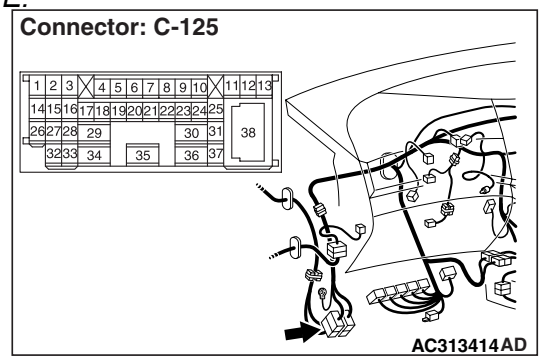


*Prior to the wiring harness inspection, check intermediate connectors C-125, and repair if necessary.*

- Check the input and output lines for open or short circuit.

**Q: Is the check result normal?**

**YES :** Go to Step 6.

**NO :** Repair the wiring harness.

Main Index
Group TOC

**Step 6. Retest the system.**
Check that the security alarm works normally.

**Q: Is the check result normal?**
**YES :** The trouble can be an intermittent malfunction (Refer to GROUP 00 – How to Cope with Intermittent Malfunction P.00-5).
**NO :** Replace the ETACS-ECU.

**Step 7. Connector check: A-09X horn relay connector**

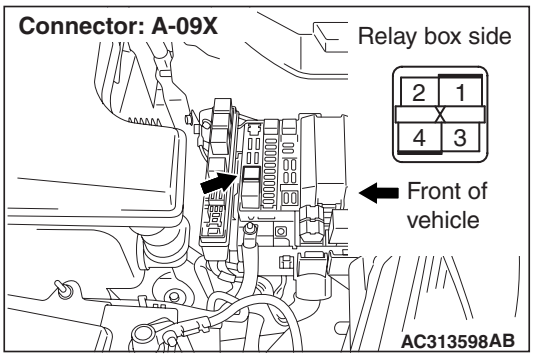


**Q: Is the check result normal?**
**YES :** Go to Step 8.
**NO :** Repair the defective connector.

**Step 8. Check the horn relay.**
Refer to GROUP 54A – Horn P.54A-158.

**Q: Is the check result normal?**
**YES :** Go to Step 9.
**NO :** Replace the horn relay.

**Step 9. Voltage measurement at the A-09X horn relay connector**

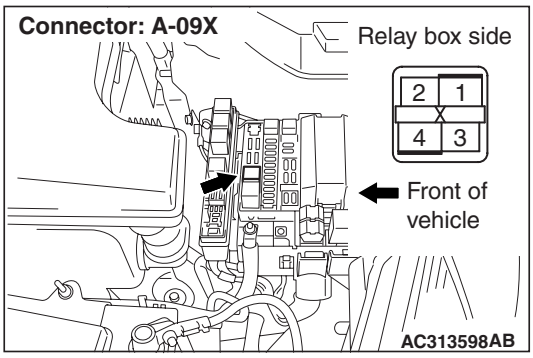


(1) Remove the relay, and measure at the relay box side.

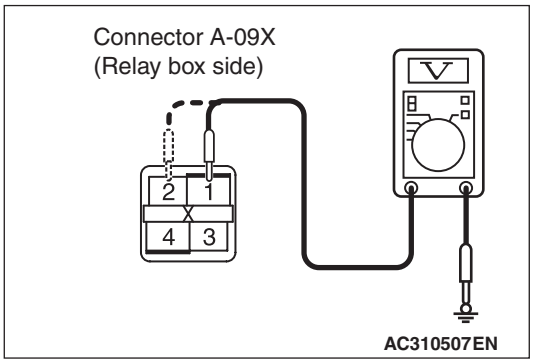


(2) Voltage between A-09X horn relay connector terminal No. 1, 2 and body earth

**OK: System voltage**

**Q: Is the check result normal?**
**YES :** Go to Step 11.
**NO :** Go to Step 10.

**Step 10. Check the wiring harness between A-09X horn relay connector terminal No. 1, 2 to fusible link (26).**

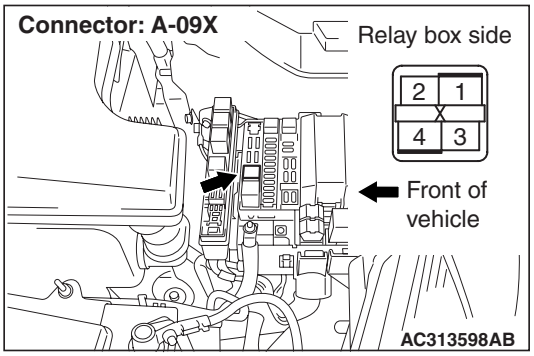


- Check the power supply line for open circuit.

**Q: Is the check result normal?**
**YES :** The trouble can be an intermittent malfunction (Refer to GROUP 00 – How to Cope with Intermittent Malfunction P.00-5).
**NO :** Repair the wiring harness.

Main Index
Group TOC

### Step 11. Connector check: A-27 horn (LO) connector and A-29 horn (HI) connector

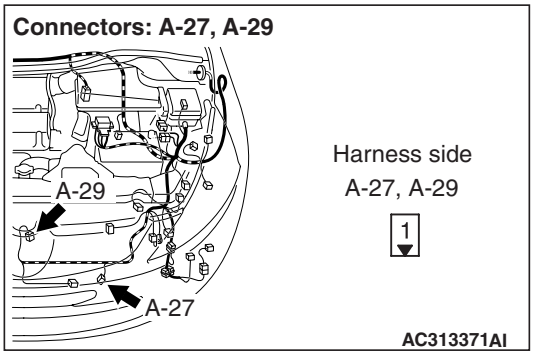


**Q: Are the check result normal?**
**YES :** Go to Step 12.
**NO :** Repair the defective connector.

### Step 12. Check the wiring harness between A-27 horn (LO) and A-29 horn (HI) connector terminal No. 1 to A-09X horn relay connector terminal No. 4.

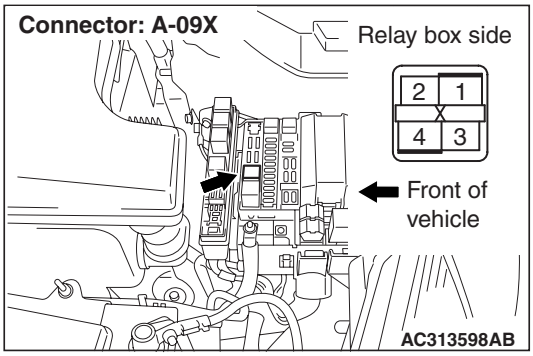


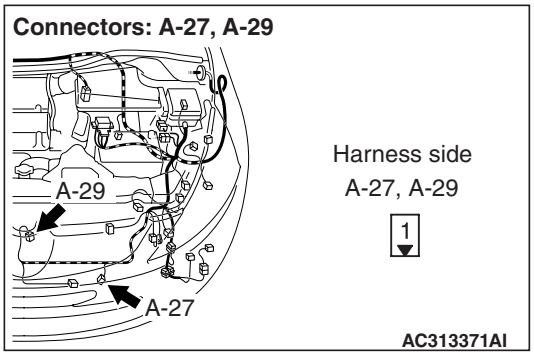


- Check the input and output lines for open or short circuit.

**Q: Is the check result normal?**
**YES :** Go to Step 13.
**NO :** Repair the wiring harness.

### Step 13. Connector check: C-302 horn switch connector

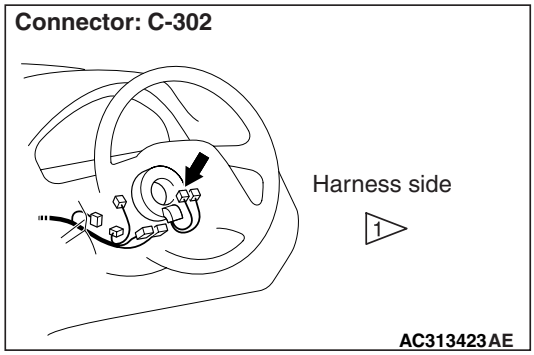


**Q: Is the check result normal?**
**YES :** Go to Step 14.
**NO :** Repair the defective connector.

Main Index
Group TOC

**Step 14. Check the wiring harness between A-09X horn relay connector terminal No. 3 to C-302 horn switch connector terminal No. 1.**

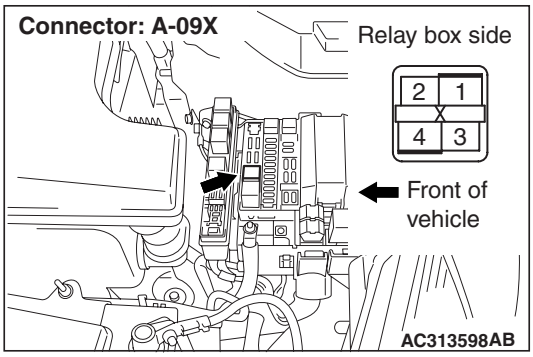


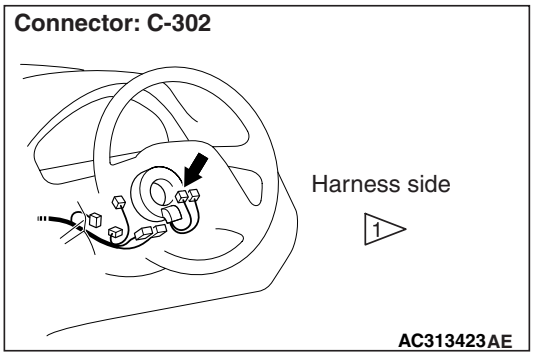


*NOTE:*

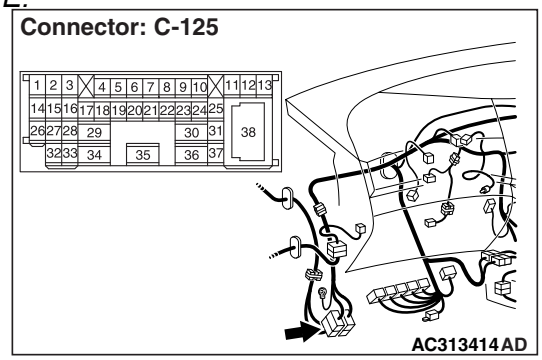


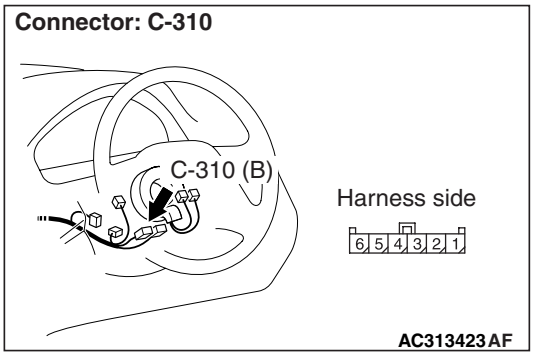


*Prior to the wiring harness inspection, check intermediate connectors C-125 and clock spring connector C-310, and repair if necessary.*

- Check the input and output lines for open or short circuit.

**Q: Is the check result normal?**

**YES :** Go to Step 15.

**NO :** Repair the wiring harness.

**Step 15. Replace the horns.**

(1) Replace the horns.

(2) Check that the security alarm works normally.

**Q: Is the check result normal?**

**YES :** The trouble can be an intermittent malfunction (Refer to GROUP 00 – How to Cope with Intermittent Malfunction P.00-5).

**NO :** Replacing the driver's seat airbag module (Refer to P.52B-334Group 52B, – the driver's and front passenger's airbag modules and clock spring.)

Main Index
Group TOC

# SEAT BELT REMAINDER FUNCTION

## INSPECTION PROCEDURE Q-1: Seat belt reminder function does not work normally.

**⚠ CAUTION**
**Whenever the ECU is replaced, ensure that the input and output signal circuits are normal.**

## COMMENTS ON TROUBLE SYMPTOM

The ETACS-ECU operates this function in accordance with the input signals below.

- Ignition switch (IG1) signal
- Seat belt switch (RH)
- Vehicle speed signal

If the seat belt reminder function does not work normally, these input signal circuit(s), connector(s), wiring harness in the CAN bus lines, the ETACS-ECU may be defective.

## POSSIBLE CAUSES

- Malfunction of the combination meter
- Malfunction of the seat belt switch (RH)
- Malfunction of the ETACS-ECU
- Damaged harness wires and connectors

## DIAGNOSIS PROCEDURE

### Step 1. M.U.T.-III CAN bus diagnostics

Use the M.U.T.-III to diagnose the CAN bus lines.

**Q: Is the check result normal?**
**YES :** Go to Step 2.
**NO :** Repair the CAN bus line (Refer to GROUP 54F, Diagnosis P.54F-13).

### Step 2. ECU check by using the SWS monitor

Check that the power supply and earth lines to the ETACS-ECU and the SWS communication lines are normal.

- Ignition switch: ON

**ECU TO BE CHECKED**

- ETACS-ECU

**OK: "OK" is displayed on the "ETACS-ECU" menu.**

**Q: Is the check result normal?**
**YES :** Go to Step 3.
**NO :** Refer to Inspection Procedure A-3 "Communication with the ETACS-ECU is not possible P.54E-55."

### Step 3. M.U.T.-III other system diagnosis code

Check whether the combination meter-related diagnosis code is set.

**Q: Is the diagnosis code set?**
**YES :** Diagnose the combination meter (Refer to GROUP 54A – Troubleshooting P.54A-12).
**NO :** Go to Step 4.

### Step 4. Function diagnosis by using the SWS monitor

Check the ETACS-ECU input signal related to the seat belt reminder function.

**<Selected item> OTHER ALARM**

- Ignition switch: ON
- Driver's seat belt switch: ON (Unfastened)

| Item No. | Item name | Normal condition |
|---|---|---|
| Item 30 | IGSW IG1 | ON |
| Item 43 | BUZZER | ON |

**OK: Normal conditions are displayed for all the items.**

**Q: Are the check result normal?**
**YES (Normal conditions are displayed for all the items) :** Go to Step 5.
**NO (Normal condition is not displayed for item No.30) :** Refer to inspection procedure P-2 "The ignition switch (IG1) signal is not received P.54E-293."
**NO (Normal condition is not displayed for item No.43) :** Replace the ETACS-ECU.

### Step 5. Retest the system.

Check that the seat belt reminder function work normally.

**Q: Is the check result normal?**
**YES :** The trouble can be an intermittent malfunction (Refer to GROUP 00 – How to Cope with Intermittent Malfunction P.00-5).
**NO :** Replace the ETACS-ECU.

Main Index
Group TOC

# INPUT SIGNAL PROCEDURES

## INSPECTION PROCEDURE P-1: The ignition switch (ACC) signal is not received.

**⚠ CAUTION**
**Whenever the ECU is replaced, ensure that the input signal circuit is normal.**

**Ignition Switch (ACC) Input Circuit**

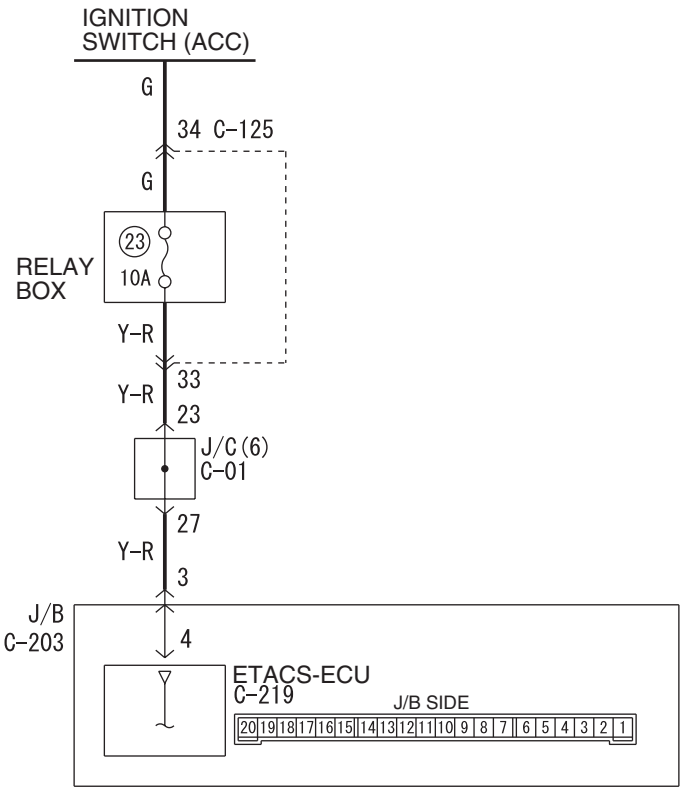


W6X54X075A

## COMMENTS ON TROUBLE SYMPTOM

Input signal from the ignition switch (ACC) is used to operate the functions below. If the signal is abnormal, these functions will not work normally.

- Sunroof
- Windshield wiper and washer
- Rear wiper and washer
- Electric retractable remote controlled door mirror
- Interior lamp automatic-shutdown

## POSSIBLE CAUSES

- Malfunction of the ETACS-ECU
- Damaged harness wires and connectors

Main Index
Group TOC

## DIAGNOSIS PROCEDURE

### Step 1. Connector check: C-219 ETACS-ECU connector

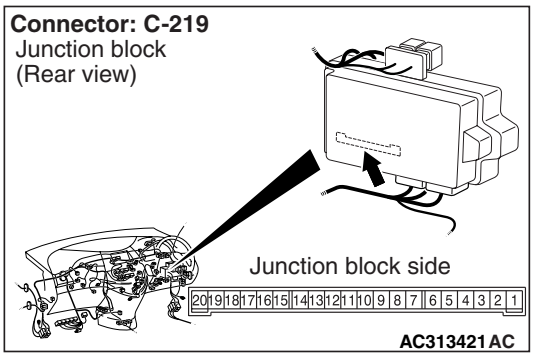


**Q: Is the check result normal?**
**YES :** Go to Step 2.
**NO :** Repair the defective connector.

### Step 2. Voltage measurement at the C-219 ETACS-ECU connector.

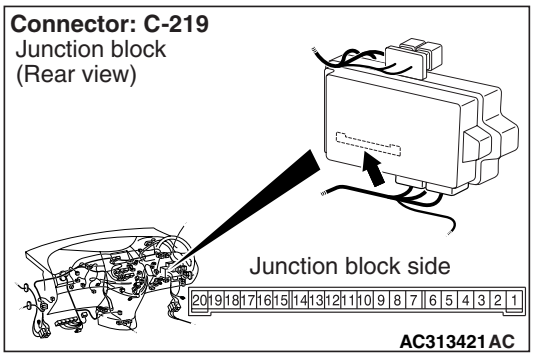


(1) Remove the ETACS-ECU, and measure at the junction block side.
(2) Ignition switch: ACC position

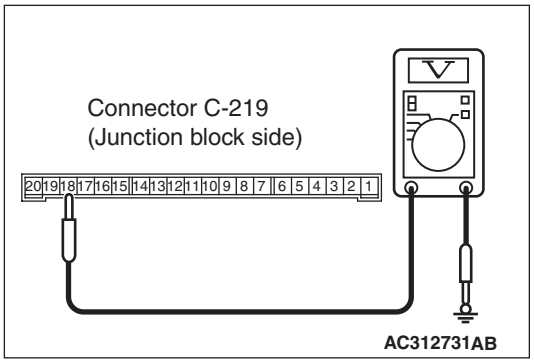


(3) Voltage between C-219 ETACS-ECU connector terminal No.4 and body earth

**OK: System voltage**

**Q: Is the check result normal?**
**YES :** Go to Step 4.
**NO :** Go to Step 3.

### Step 3. Check the wiring harness between C-219 ETACS-ECU connector terminal No.4 to the ignition switch (ACC).

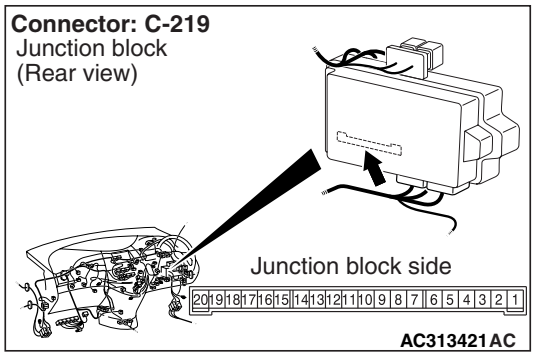


*NOTE:*

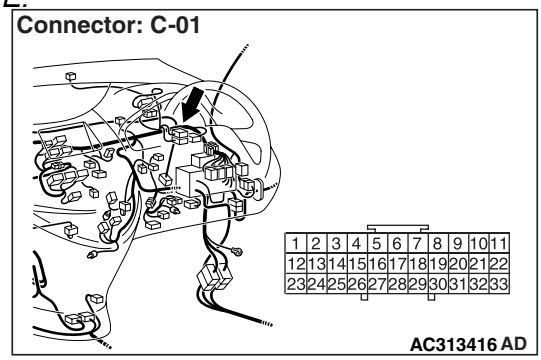


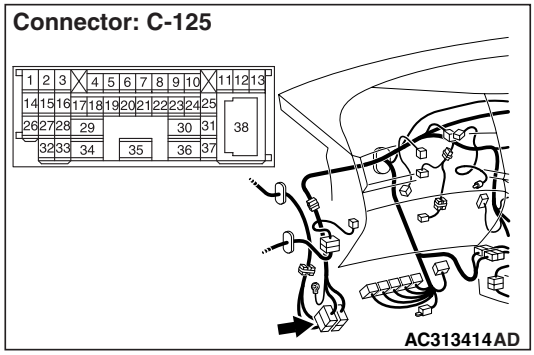


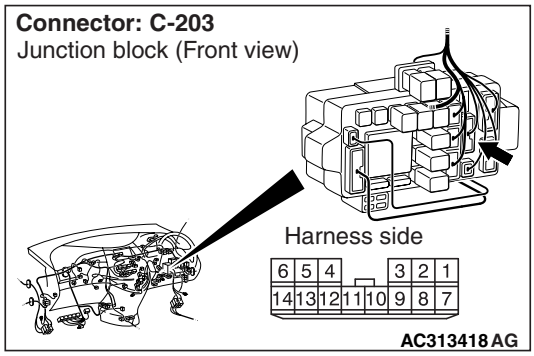


*Prior to the wiring harness inspection, check junction block connector C-203, joint connector C-01 and intermediate connector C-125, and repair if necessary.*

- Check the power supply line for open circuit.

Main Index
Group TOC

**Q: Is the check result normal?**

**YES :** The trouble can be an intermittent malfunction (Refer to GROUP 00 – How to Cope with Intermittent Malfunction P.00-5).

**NO :** Repair the wiring harness.

**Step 4. SWS monitor data list.**

**<Selected item> ETACS ECU**

- Ignition switch: OFF (LOCK) → ACC

| Item No. | Item name | Normal condition |
|---|---|---|
| Item 31 | IG SW(ACC) | OFF → ON |

**OK: Normal condition is displayed.**

**Q: Is the check result normal?**

**YES :** The trouble can be an intermittent malfunction (Refer to GROUP 00 – How to Cope with Intermittent Malfunction P.00-5).

**NO :** Replace the ETACS-ECU.

## INSPECTION PROCEDURE P-2: The ignition switch (IG1) signal is not received.

**⚠ CAUTION**

**Whenever the ECU is replaced, ensure that the input signal circuit is normal.**

**Ignition Switch (IG1) Input Circuit**

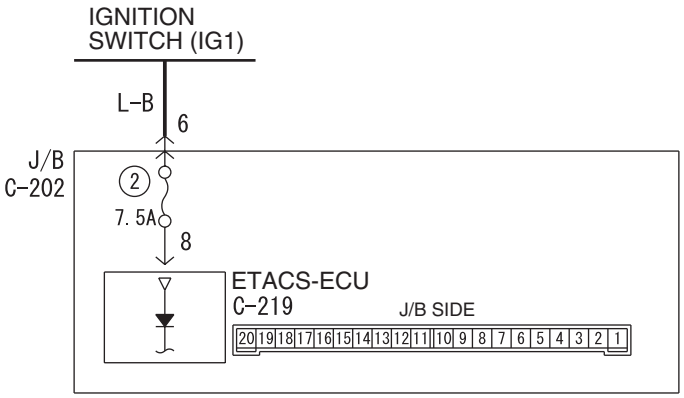


Wire colour code
B : Black LG : Light green G : Green L : Blue W : White Y : Yellow SB : Sky blue
BR : Brown O : Orange GR : Gray R : Red P : Pink V : Violet

W4X54E110A

## COMMENTS ON TROUBLE SYMPTOM

Input signal from the ignition switch (IG1) is used to operate the functions below. If the signal is abnormal, these functions will not work normally.

- Lamp reminder function
- Door-ajar warning buzzer
- Turn-signal lamp operation sound
- Power window
- Ignition key cylinder illumination lamp
- Headlamp and tail lamp
- Headlamp automatic-shutdown function
- Turn signal lamp
- Interior lamps

## POSSIBLE CAUSES

- Malfunction of the ETACS-ECU
- Damaged harness wires and connectors

Main Index
Group TOC

## DIAGNOSIS PROCEDURE

### Step 1. Connector check: C-219 ETACS-ECU connector

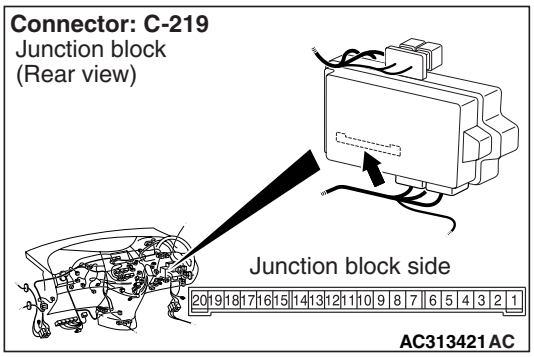


**Q: Is the check result normal?**
**YES :** Go to Step 2.
**NO :** Repair the defective connector.

### Step 2. Voltage measurement at the C-219 ETACS-ECU connector.

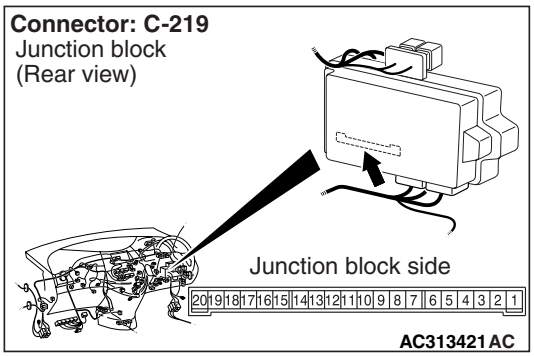


(1) Remove the ETACS-ECU, and measure at the junction block side.
(2) Ignition switch: ON position

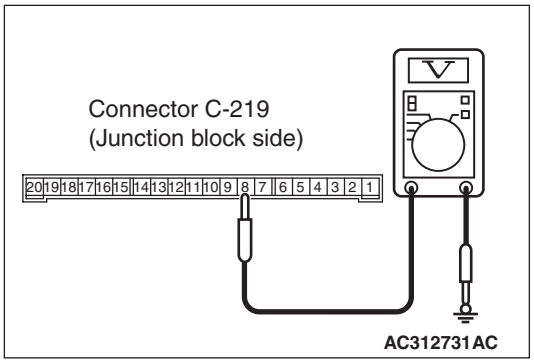


(3) Voltage between C-219 ETACS-ECU connector terminal No.8 and body earth

**OK: System voltage**

**Q: Is the check result normal?**
**YES :** Go to Step 4.
**NO :** Go to Step 3.

### Step 3. Check the wiring harness between C-219 ETACS-ECU connector terminal No.8 to the ignition switch (IG1).

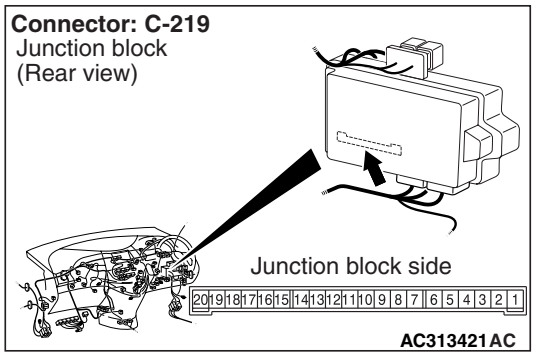


*NOTE:*

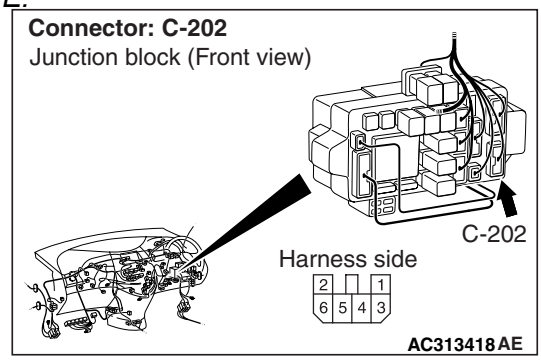


*Prior to the wiring harness inspection, check junction block connector C-202, and repair if necessary.*

- Check the power supply line for open circuit.

**Q: Is the check result normal?**
**YES :** The trouble can be an intermittent malfunction (Refer to GROUP 00 – How to Cope with Intermittent Malfunction P.00-5).
**NO :** Repair the wiring harness.

### Step 4. SWS monitor data list.

**<Selected item> ETACS ECU**

- Ignition switch: ACC → ON

| Item No. | Item name | Normal condition |
|---|---|---|
| Item 30 | IG SW(IG1) | OFF → ON |

**OK: Normal condition is displayed.**

**Q: Is the check result normal?**
**YES :** The trouble can be an intermittent malfunction (Refer to GROUP 00 – How to Cope with Intermittent Malfunction P.00-5).
**NO :** Replace the ETACS-ECU.

Main Index
Group TOC

## INSPECTION PROCEDURE P-3: The front fog lamp switch signal is not received.

**⚠ CAUTION**
**Whenever the ECU is replaced, ensure that the input signal circuit is normal.**

**Front Fog Lamp Switch Input Circuit**

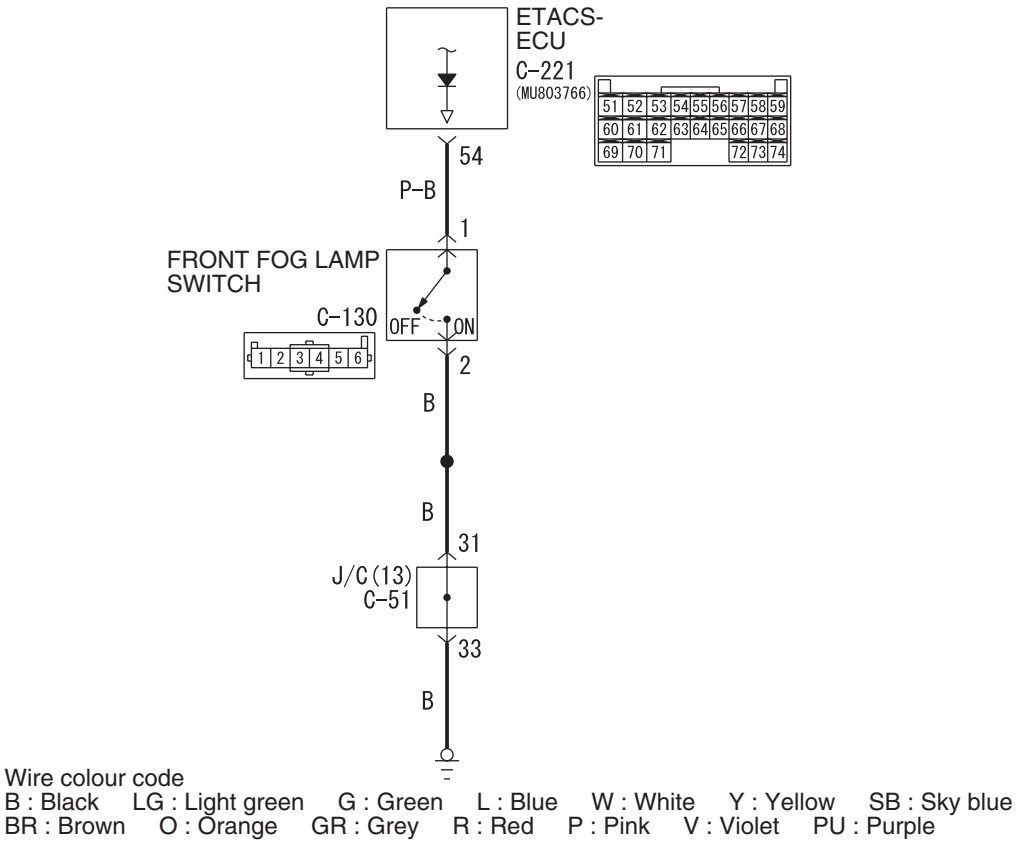


W6X54X076A

## COMMENTS ON TROUBLE SYMPTOM

Input signal from the front fog lamp switch is used to operate the front fog lamps. If the signal is abnormal, the front fog lamps will not illuminate and extinguish normally.

## POSSIBLE CAUSES

- Malfunction of the front fog lamp switch
- Malfunction of the ETACS-ECU
- Damaged harness wires and connectors

Main Index
Group TOC

## DIAGNOSIS PROCEDURE

### Step 1. Connector check: C-130 fog lamp switch connector

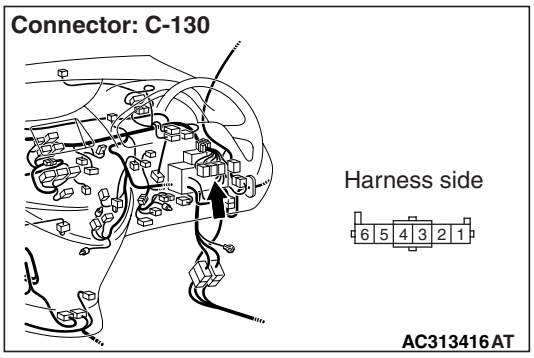


**Q: Is the check result normal?**
**YES :** Go to Step 2.
**NO :** Repair the defective connector.

### Step 2. Check the front fog lamp switch.

Refer to GROUP 54A – Fog lamp P.54A-149.

**Q: Is the check result normal?**
**YES :** Go to Step 3.
**NO :** Replace the front fog lamp switch.

### Step 3. Resistance measurement at the C-130 front fog lamp switch connector.

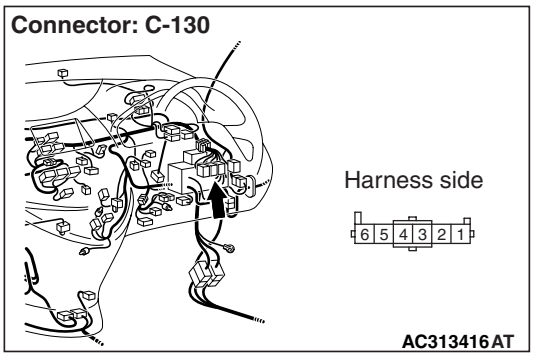


(1) Remove the front fog lamp switch, and measure at the wiring harness side.

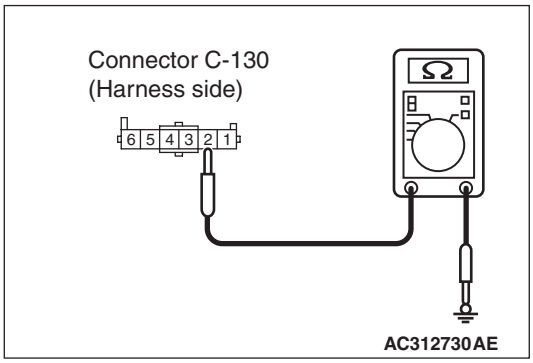


(2) Resistance between C-130 front fog lamp switch connector terminal No.2 and body earth

**OK: 2Ω or less**

**Q: Is the check result normal?**
**YES :** Go to Step 5.
**NO :** Go to Step 4.

### Step 4. Check the wiring harness from C-130 front fog lamp switch connector terminal No.2 to body earth.

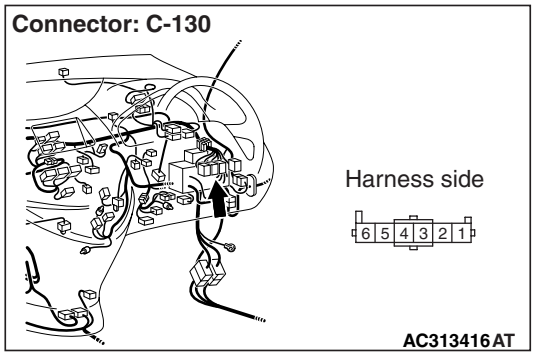


*NOTE:*

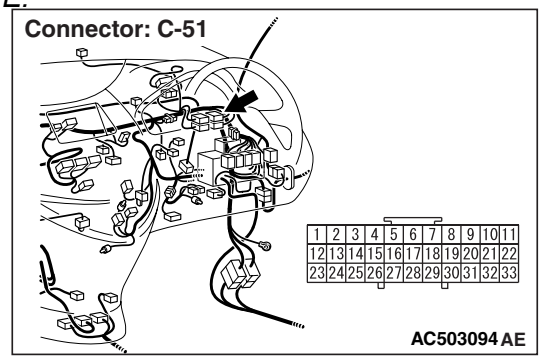


*Prior to the wiring harness inspection, check joint connector C-51, and repair if necessary.*

- Check the earth wires for open circuit.

**Q: Is the check result normal?**
**YES :** The trouble can be an intermittent malfunction (Refer to GROUP 00 – How to Cope with Intermittent Malfunction P.00-5).
**NO :** Repair the wiring harness.

Main Index
Group TOC

### Step 5. Connector check: C-221 ETACS-ECU connector

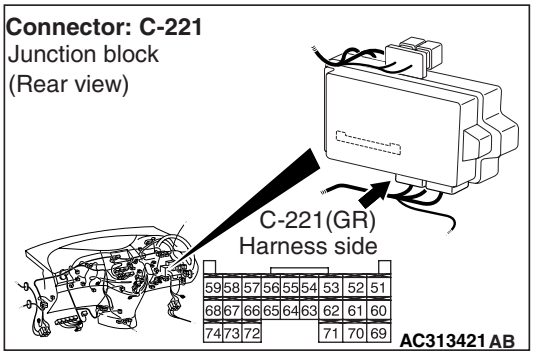


**Q: Is the check result normal?**
**YES :** Go to Step 6.
**NO :** Repair the defective connector.

### Step 6. Check the wiring harness from C-221 ETACS-ECU connector No.54 to C-130 front fog lamp switch connector terminal No.1.

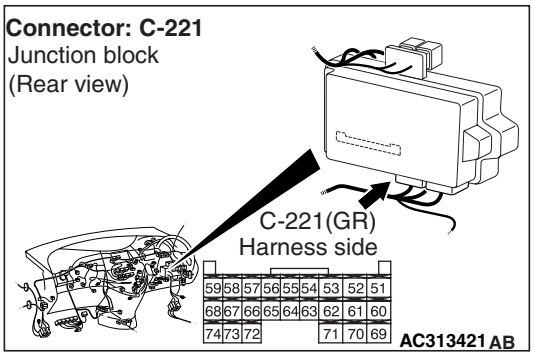


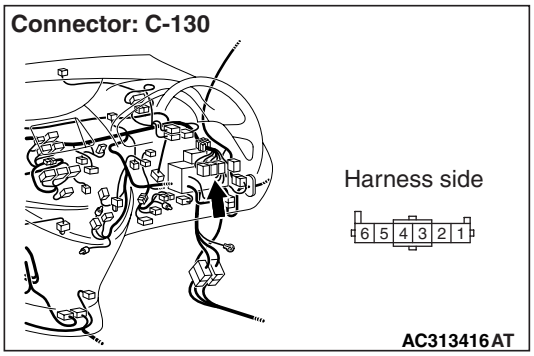


- Check the input line for open circuit.

**Q: Is the check result normal?**
**YES : .** Go to Step 7.
**NO : .** Repair the wiring harness.

### Step 7. SWS monitor data list

**<Selected item> ETACS ECU**

- Ignition switch: ON
- Lighting switch: "TAIL" or "HEAD"
- Front fog lamp switch: OFF → ON

| Item No. | Item name | Normal condition |
|---|---|---|
| Item 36 | F.FOG LAMP | OFF → ON |

**OK: Normal condition is displayed.**

**Q: Is the check result normal?**
**YES :** The trouble can be an intermittent malfunction (Refer to GROUP 00 – How to Cope with Intermittent Malfunction P.00-5).
**NO :** Replace the ETACS-ECU.

Main Index
Group TOC

## INSPECTION PROCEDURE P-4: The driver's door switch signal is not received.

**⚠ CAUTION**
**Whenever the ECU is replaced, ensure that the input signal circuit is normal.**

**Driver's Door Switch Input Circuit**

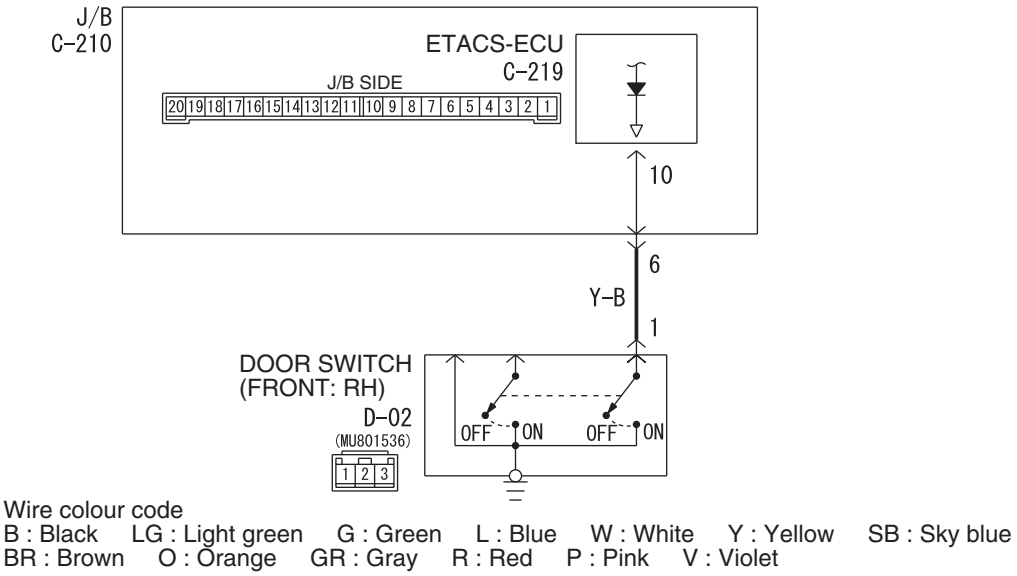


W4X54X121A

## COMMENTS ON TROUBLE SYMPTOM

Input signal from the driver's door switch is used to operate the functions below. If the signal is abnormal, these functions will not work normally.

- Lamp reminder function
- Door-ajar warning buzzer
- Keyless entry system
- Sunroof timer
- Electric retractable remote controlled door mirror
- Ignition key cylinder illumination lamp
- Head lamp automatic-shutdown
- Interior lamp
- Interior lamp automatic-shutdown
- Door-ajar warning lamp

## POSSIBLE CAUSES

- Malfunction of the driver's door switch
- Malfunction of the ETACS-ECU
- Damaged harness wires and connectors

Main Index
Group TOC

## DIAGNOSIS PROCEDURE

**Step 1. Check the installation condition.**
Check that the front door switch (RH) is installed on the body correctly.

**Q: Is the check result normal?**
**YES :** Go to Step 2.
**NO :** Correct the installation condition.

**Step 2. Connector check: D-02 front door switch (RH) connector**

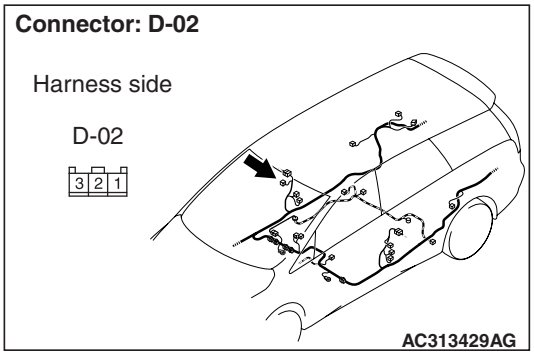


**Q: Is the check result normal?**
**YES :** Go to Step 3.
**NO :** Repair the defective connector.

**Step 3. Check the front door switch (RH).**
Refer to GROUP 42 – Door P.42-36.

**Q: Is the check result normal?**
**YES :** Go to Step 4.
**NO :** Replace the front door switch (RH).

**Step 4. Connector check: C-219 ETACS-ECU connector**

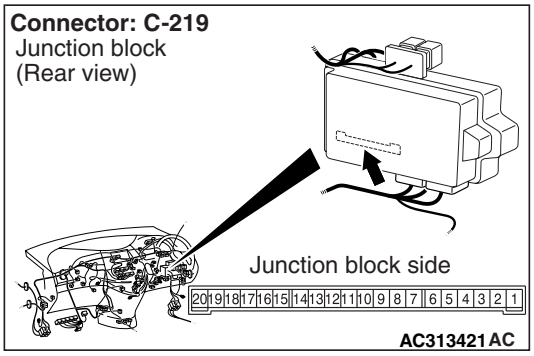


**Q: Is the check result normal?**
**YES :** Go to Step 5.
**NO :** Repair the defective connector.

**Step 5. Check the wiring harness between D-02 front door switch (RH) connector terminal No.1 to C-219 ETACS-ECU connector terminal No.10.**

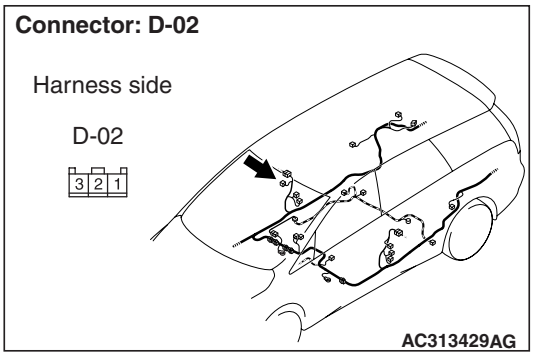


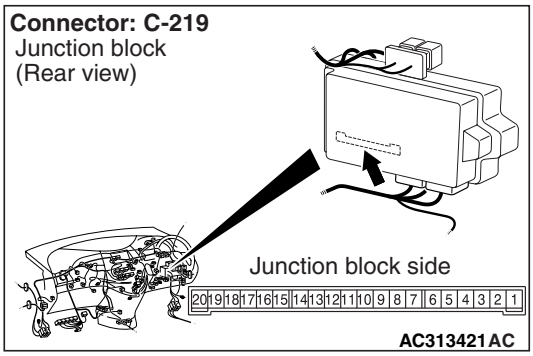


*NOTE:*

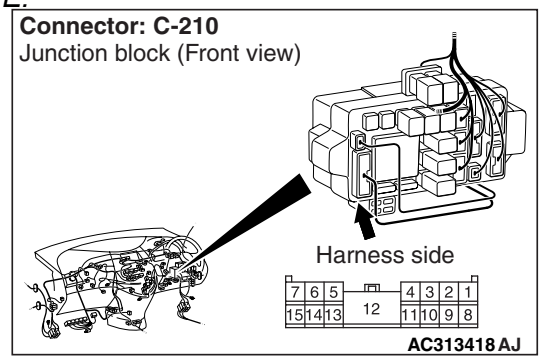


*Prior to the wiring harness inspection, check joint connector C-210, and repair if necessary.*

- Check the input line for open circuit.

**Q: Is the check result normal?**
**YES :** Go to Step 6.
**NO :** Repair the wiring harness.

Main Index
Group TOC

**Step 6. SWS monitor data list.**

**<Selected item> ETACS ECU**

- Driver's door: close → open

| Item No. | Item name | Normal condition |
|---|---|---|
| Item 32 | DR DOOR SW | OFF → ON |

**OK: Normal condition is displayed.**

**Q: Is the check result normal?**

**YES :** The trouble can be an intermittent malfunction (Refer to GROUP 00 – How to Cope with Intermittent Malfunction P.00-5).

**NO :** Replace the ETACS-ECU.

## INSPECTION PROCEDURE P-5: The column switch (lighting, turn-signal lamp and headlamp washer switch) signal is not received.

**⚠ CAUTION**

**Whenever the ECU is replaced, ensure that the input signal circuit is normal.**

**Lighting Switch Input Circuit**

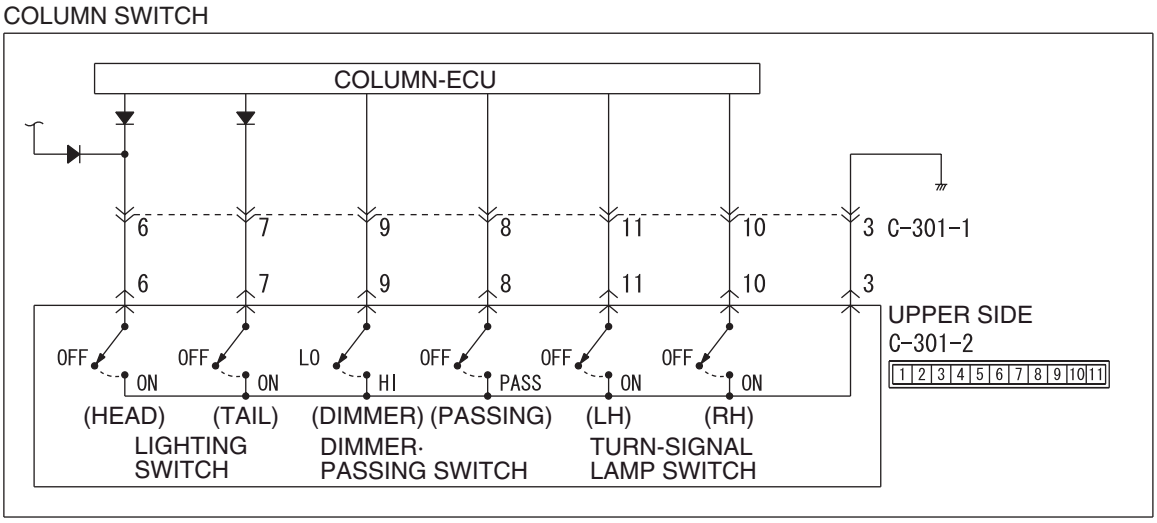


W4X54X107A

## COMMENTS ON TROUBLE SYMPTOM

Input signal from the column switch (lighting, turn-signal lamp and headlamp washer switch) is used to operate the functions below. If the signal is abnormal, these functions will not work normally.

- Lamp reminder function
- Headlamp washer
- Headlamp and tail lamp
- Headlamp automatic-shutdown function
- Front and rear fog lamp
- Turn signal lamp
- Headlamp washer

## POSSIBLE CAUSES

- Malfunction of the column switch
- Damaged harness wires and connectors

Main Index
Group TOC

## DIAGNOSIS PROCEDURE

**Step 1. Check the column switch connector.**
Check that the wiper and washer switch connector, the lighting switch connector and the switch body connector are in good condition.

**Q: Is the check result normal?**
**YES :** Go to Step 2.
**NO :** Repair the defective connector.

**Step 2. Check the column switch (lighting switch and switch body).**
Refer to GROUP 54A – Column switch P.54A-212.

**Q: Is the check result normal?**
**YES :** Go to Step 3.
**NO :** Replace the column switch.

**Step 3. ECU check by using the SWS monitor**
Check that the power supply and earth lines to the column switch (column-ECU) and the SWS communication lines are normal.
- Ignition switch: OFF

**ECUS TO BE CHECKED**
- COLUMN ECU

**OK: "OK" is displayed on the "COLUMN ECU" menu.**

**Q: Is the check result normal?**
**YES :** Go to Step 4.
**NO :** Refer to Inspection Procedure A-2 "Communication with the column switch (column-ECU) is not possible P.54E-51."

**Step 4. SWS monitor data list**

**<Selected item> COLUMN ECU**
- Operate each function of the switch.

| Item No. | Item name | Normal condition |
|---|---|---|
| Item 00 | HEADLAMP SW | ON |
| Item 01 | TAIL LAMP SW | ON |
| Item 02 | DIMMER SW | ON |
| Item 03 | PASSING SW | ON |
| Item 10 | TURN SIG.RH | ON |
| Item 11 | TURN SIG.LH | ON |
| Item 16 | HD WASHER SW | ON |

**OK: Normal conditions are displayed for all the functions of the switch.**

**Q: Is the check result normal?**
**YES :** The trouble can be an intermittent malfunction (Refer to GROUP 00 – How to Cope with Intermittent Malfunction P.00-5).
**NO :** Replace the column switch.

Main Index
Group TOC

**INSPECTION PROCEDURE P-6: The column switch (windshield wiper washer and rear wiper washer switch) signal is not received.**

**⚠ CAUTION**
**Whenever the ECU is replaced, ensure that the input signal circuit is normal.**

**Windshield Wiper and Washer Switch Input Circuit**

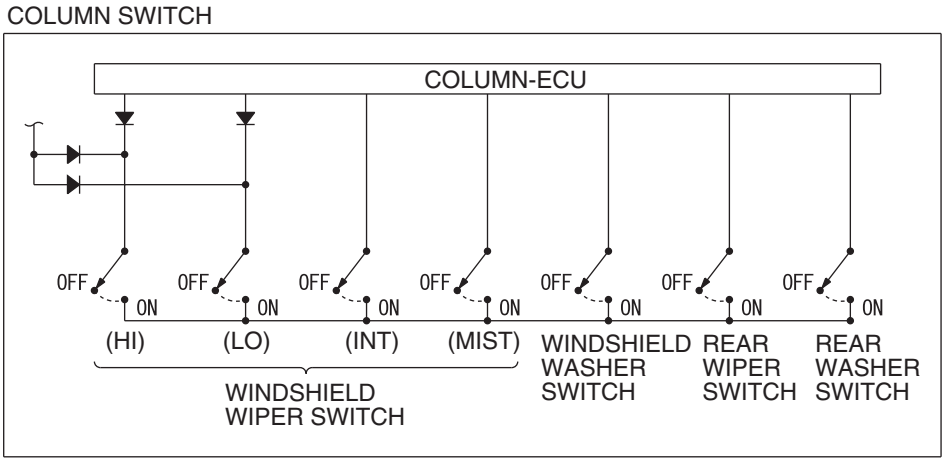


W4X54X104A

## COMMENTS ON TROUBLE SYMPTOM

Input signal from the column switch (wiper switch) is used to operate the functions below. If the signal is abnormal, these functions will not work normally.

- Windshield wiper and washer
- Rear wiper and washer
- Headlamp washer

## POSSIBLE CAUSES

- Malfunction of the column switch
- Damaged harness wires and connectors

## DIAGNOSIS PROCEDURE

**Step 1. ECU check by using the SWS monitor**

Check that the power supply and earth lines to the column switch (column-ECU) and the SWS communication lines are normal.

- Ignition switch: OFF

**ECUS TO BE CHECKED**

- COLUMN ECU

**OK: "OK" is displayed on the "COLUMN ECU" menu.**

**Q: Is the check result normal?**

**YES :** Go to Step 2.

**NO : .** Refer to Inspection Procedure A-2 "Communication with column switch (column-ECU) is not possible P.54E-51."

**Step 2. SWS monitor data list.**

**<Selected item> COLUMN ECU**

Operate each function of the switch.

| Item No. | Item name | Normal condition |
|---|---|---|
| Item 05 | INT WIPER SW | ON |
| Item 06 | LO WIPER SW | ON |
| Item 07 | HI WIPER SW | ON |
| Item 08 | MIST WIPER SW | ON |
| Item 09 | FRONT WASH.SW | ON |
| Item 13 | REAR WIPER SW | ON |
| Item 14 | REAR WASH.SW | ON |

**OK: Normal conditions are displayed for all the functions of the switch.**

**Q: Is the check result normal?**

**YES :** The trouble can be an intermittent malfunction (Refer to GROUP 00 – How to Cope with Intermittent Malfunction P.00-5).

**NO :** Replace the column switch.

Main Index
Group TOC

## INSPECTION PROCEDURE P-7: The windshield intermittent wiper volume signal is not received.

**⚠ CAUTION**
**Whenever the ECU is replaced, ensure that the input signal circuit is normal.**

**Windshield Intermittent Wiper Interval Adjusting Knob Input Circuit**

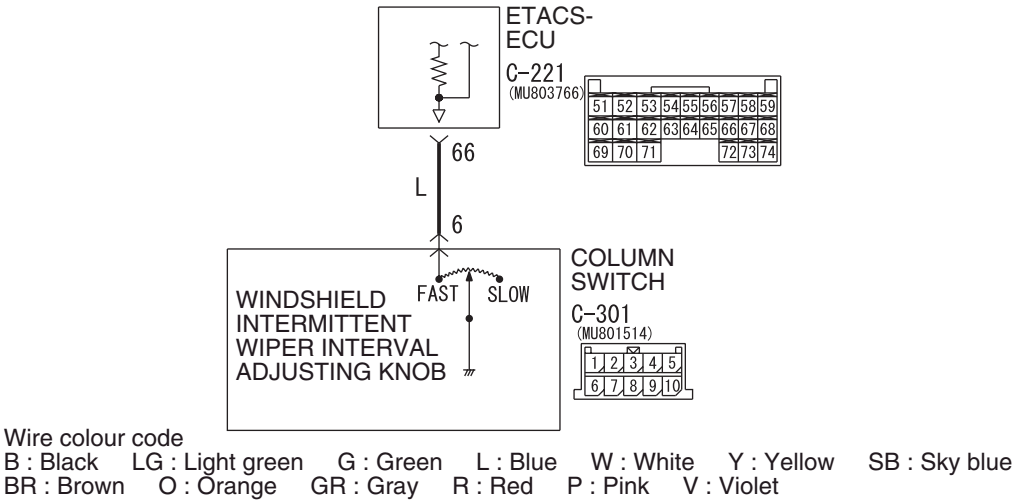


W4X54X128A

## COMMENTS ON TROUBLE SYMPTOM

The intermittent wiper interval is calculated in accordance with the input signal from the windshield intermittent wiper volume. If this signal is abnormal, the wiper interval can not be adjusted.

## POSSIBLE CAUSES

- Malfunction of the column switch
- Malfunction of the ETACS-ECU
- Damaged harness wires and connectors

## DIAGNOSIS PROCEDURE

### Step 1. Connector check: C-301 column switch connector.

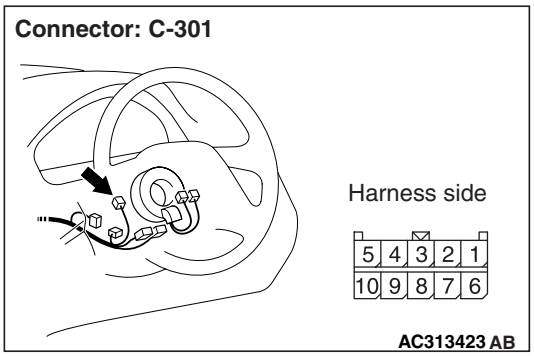


**Q: Is the check result normal?**
**YES :** Go to Step 2.
**NO :** Repair the defective connector.

### Step 2. Resistance measurement at the C-301 column switch connector.

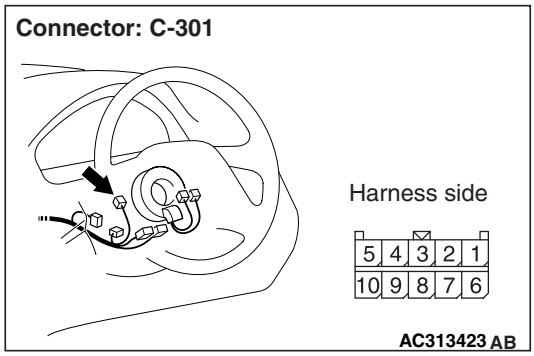


(1) Disconnect the connector, and measure at the column switch side.

Main Index
Group TOC

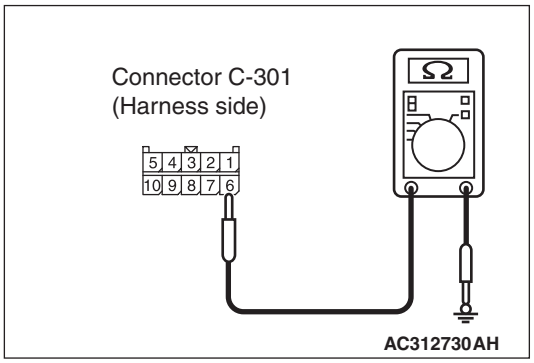


(2) Resistance between C-301 column switch connector terminal No.6 and body earth

**OK: The resistance should rise from 0 to 1 kΩ when the windshield intermittent wiper volume is rotated from "Fast" to "Slow".**

**Q: Is the check result normal?**
**YES :** Go to Step 3.
**NO :** Replace the column switch.

## Step 3. Connector check: C-221 ETACS-ECU connector.

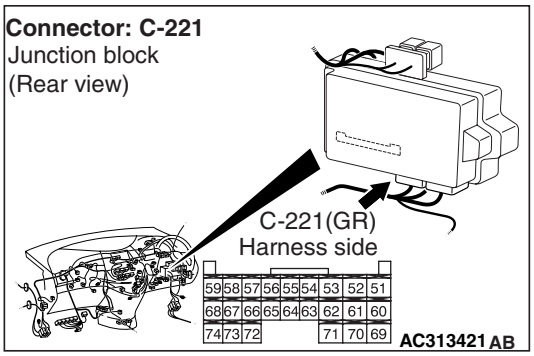


**Q: Is the check result normal?**
**YES :** Go to Step 4.
**NO :** Repair the defective connector.

## Step 4. Check the wiring harness between C-301 column switch connector terminal No.6 to C-221 ETACS-ECU connector terminal No.66.

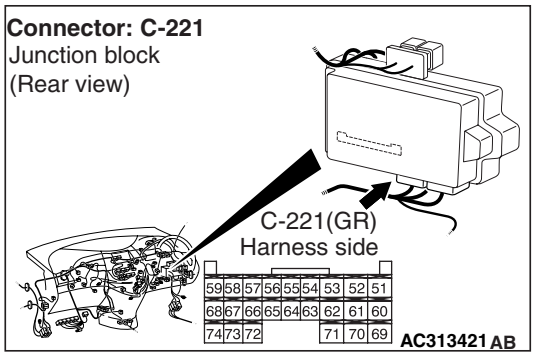


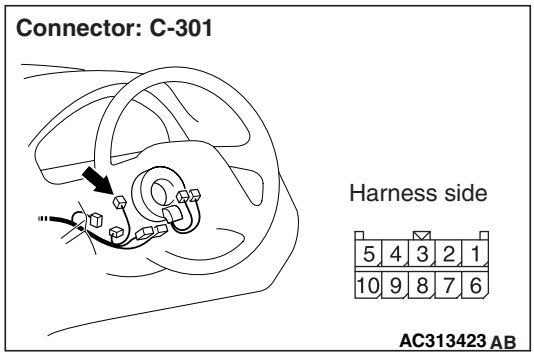


- Check the input line for open circuit.

**Q: Is the check result normal?**
**YES :** Go to Step 5.
**NO :** Repair the wiring harness.

## Step 5. SWS monitor data list.

**<Selected item> ETACS ECU**
- Ignition switch: ACC
- Wiper switch: INT

| Item No. | Item name | Normal condition |
|---|---|---|
| Item 37 | INT WIPE TIME | 2.4 to 18.0 s |

**OK: The display will be changed as the intermittent wiper volume is rotated.**

**Q: Is the check result normal?**
**YES :** The trouble can be an intermittent malfunction (Refer to GROUP 00 – How to Cope with Intermittent Malfunction P.00-5).
**NO :** Replace the ETACS-ECU.

Main Index
Group TOC

## INSPECTION PROCEDURE P-8: When the power window main switch is operated, the switch signals are not received.

**⚠ CAUTION**

**Whenever the ECU is replaced, ensure that the input signal circuit is normal.**

**Power Window Main Switch Input Circuit**

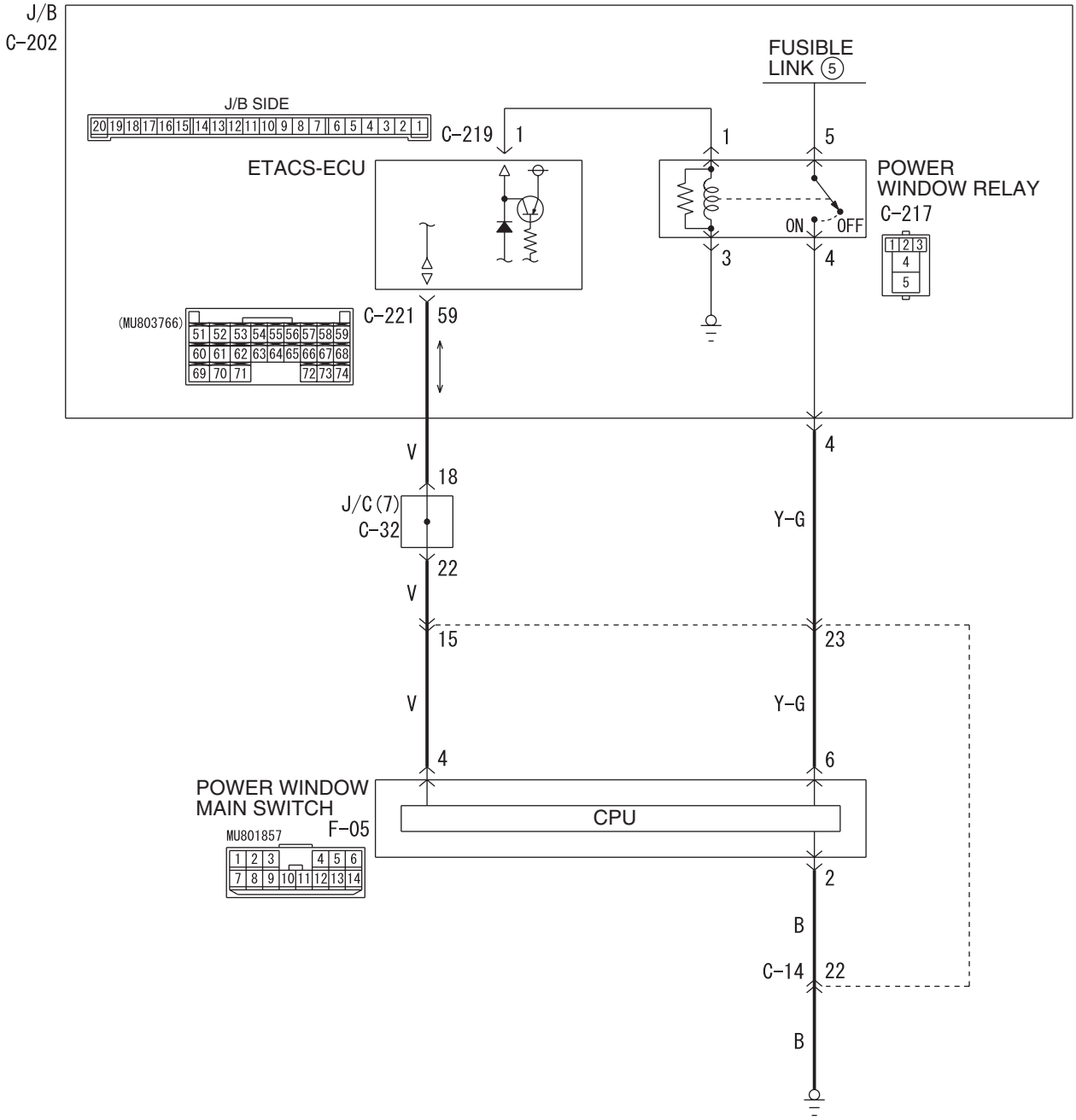


Wire colour code
B : Black LG : Light green G : Green L : Blue W : White Y : Yellow SB : Sky blue
BR : Brown O : Orange GR : Grey R : Red P : Pink V : Violet PU : Purple

W6X54X077A

Main Index
Group TOC

## COMMENTS ON TROUBLE SYMPTOM

Input signal from the power window main switch is used in order to check the power window main switch and confirm how the system is communicating with the ETACS-ECU. If the communication line is defective, the power windows will not work normally.

## POSSIBLE CAUSES

- Malfunction of the power window main switch
- Malfunction of the ETACS-ECU
- Damaged harness wires and connectors

## DIAGNOSIS PROCEDURE

**Step 1. ECU check on the SWS monitor**

Check that the power supply and earth lines to the power window main switch (power window module) and the SWS communication lines are normal.

- Turn the ignition switch to the ON position.

**ECUS TO BE CHECKED**

- P/W MODULE

  **OK: "OK" is displayed on the "P/W MODULE" menu.**

**Q: Is the check result normal?**

**YES :** Go to Step 2.

**NO :** Refer to Inspection Procedure A-5 "Communication with the power window main switch (power window module) is not possible P.54E-64."

**Step 2. Function diagnosis by using the SWS monitor**

**<Selected item> POWER WINDOW**

- Turn the ignition switch to the ON position.
- Power window main switch: UP

| Item No. | Item name | Normal conditions |
|---|---|---|
| Item 71 | P/W ECU ACK | INPUT CHECK (only momentarily when switch is operated) |

**OK: Normal condition is displayed.**

**Q: Is the check result normal?**

**YES :** The trouble can be an intermittent malfunction (Refer to GROUP 00 – How to Cope with Intermittent Malfunction P.00-5).

**NO :** Replace the ETACS-ECU.

Main Index
Group TOC

**INSPECTION PROCEDURE P-9: When the sunroof switch is operated, the switch signals are not received.**

**⚠ CAUTION**
**Whenever the ECU is replaced, ensure that the input signal circuit is normal.**

**Sunroof Switch Input Circuit**

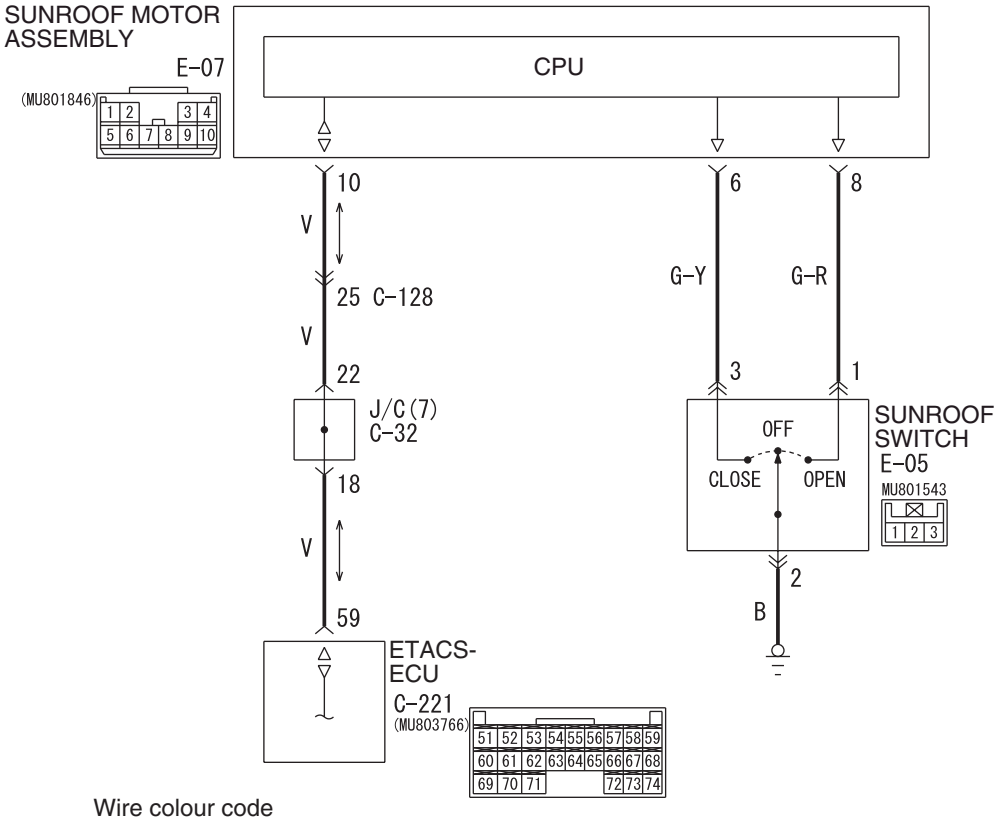


Wire colour code
B : Black LG : Light green G : Green L : Blue W : White Y : Yellow SB : Sky blue
BR : Brown O : Orange GR : Grey R : Red P : Pink V : Violet PU : Purple

W6X54X078A

## COMMENTS ON TROUBLE SYMPTOM

If the input signal from the sunroof switch is abnormal, the sunroof input check response signal will not be sent to the SWS communication line.

## POSSIBLE CAUSES

- Malfunction of the sunroof assembly
- Malfunction of the sunroof switch
- Damaged harness wires and connectors

Main Index
Group TOC

## DIAGNOSIS PROCEDURE

### Step 1. ECU check on the SWS monitor

Check that the power supply and earth lines to the sunroof-ECU and the SWS communication lines are normal.

- Ignition switch: ON

**ECUS TO BE CHECKED**

- Sunroof-ECU

**OK: "OK" is displayed on the "sunroof-ECU" menu.**

**Q: Is the check result normal?**

**YES :** Go to Step 2.

**NO :** Refer to Inspection Procedure A-6 "Communication with the sunroof motor assembly (sunroof-ECU) is not possible P.54E-71."

### Step 2. Connector check: E-05 sunroof switch connector

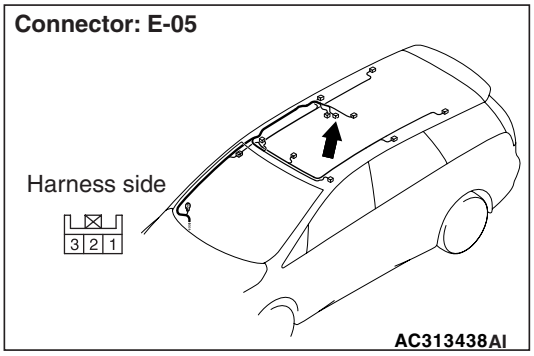


**Q: Is the check result normal?**

**YES :** Go to Step 3.

**NO :** Repair the defective connector.

### Step 3. Check the sunroof switch.

Refer to GROUP 42 – Sunroof P.42-78.

**Q: Is the check result normal?**

**YES :** Go to Step 4.

**NO :** Replace the sunroof switch.

### Step 4. Resistance measurement at the E-05 sunroof switch connector.

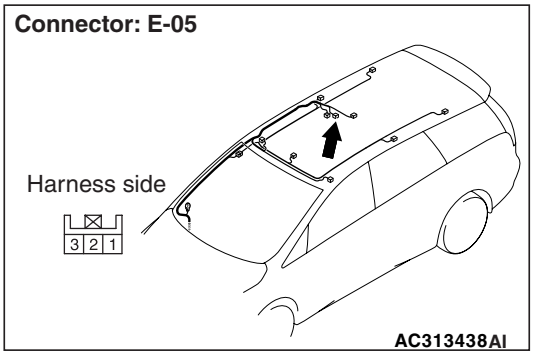


(1) Disconnect the connector, and measure at the wiring harness side.

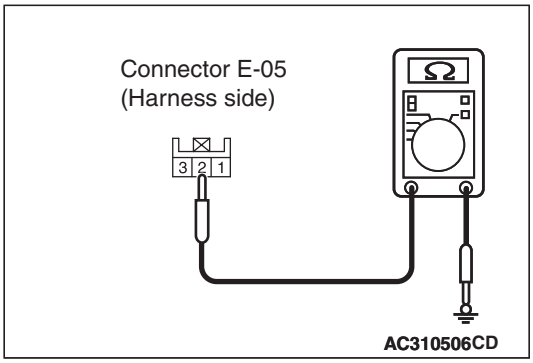


(2) Continuity between E-05 sunroof switch connector terminal No.2 and body earth

**OK: 2Ω or less**

**Q: Is the check result normal?**

**YES :** Go to Step 6.

**NO :** Go to Step 5.

### Step 5. Check the wiring harness between E-05 sunroof motor switch connector terminal No.2 to body earth.

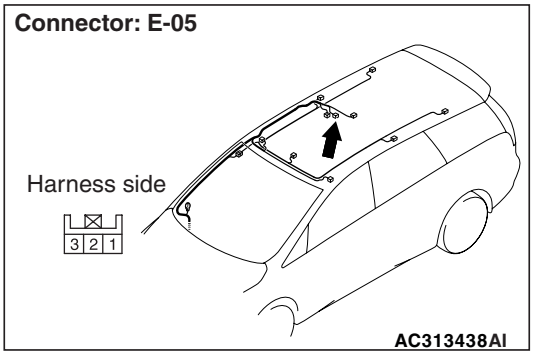


- Check the earth wires for open circuit.

**Q: Is the check result normal?**

**YES :** The trouble can be an intermittent malfunction (Refer to GROUP 00 – How to Cope with Intermittent Malfunction P.00-5).

**NO :** Repair the wiring harness.

Main Index
Group TOC

**Step 6. Connector check: E-07 sunroof motor assembly connector**

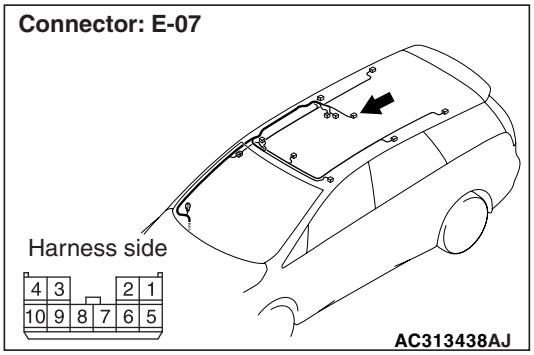


**Q: Is the check result normal?**
**YES :** Go to Step 7.
**NO :** Repair the defective connector.

**Step 7. Check the wiring harness from E-07 sunroof motor assembly connector terminal Nos. 6 and 8 to E-05 sunroof switch connector terminal Nos. 3 and 1.**

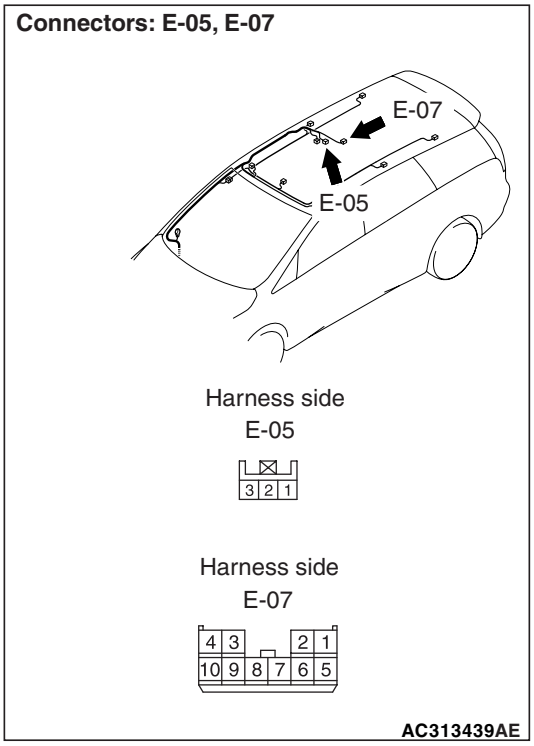


- Check the input line for open circuit.

**Q: Is the check result normal?**
**YES :** Go to Step 8.
**NO :** Repair the wiring harness.

**Step 8. Confirm communication data by using the SWS monitor.**

**<Selected item> SUNROOF ECU**

- Operate the sunroof switch.

| Item No. | Item name | Normal conditions |
|---|---|---|
| Item 72 | S/R ECU ACK | INPUT CHECK (only momentarily when switch is operated) |

**OK: Normal condition is displayed.**

**Q: Is the check result normal?**
**YES :** The trouble can be an intermittent malfunction (Refer to GROUP 00 – How to Cope with Intermittent Malfunction P.00-5).
**NO :** Replace the sunroof motor assembly.

Main Index
Group TOC

## INSPECTION PROCEDURE P-10: The key reminder switch signal is not received.

**⚠ CAUTION**
**Whenever the ECU is replaced, ensure that the input signal circuit is normal.**

**Key Reminder Switch Input Circuit**

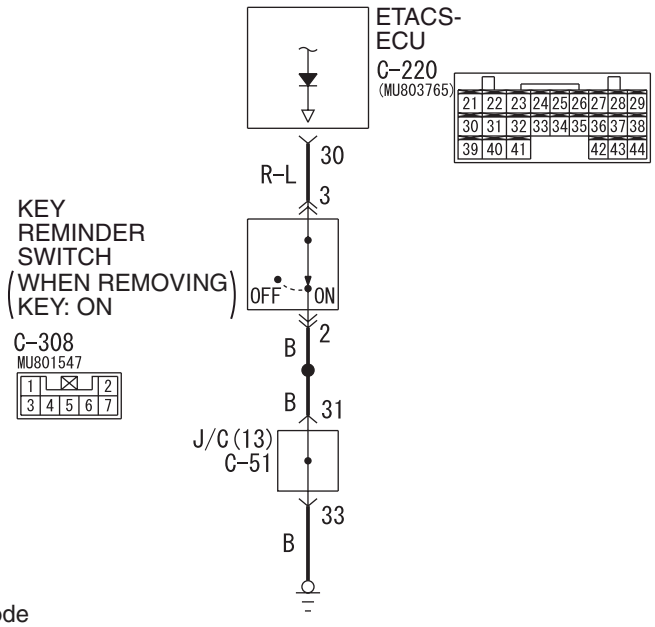


Wire colour code
B : Black LG : Light green G : Green L : Blue W : White Y : Yellow SB : Sky blue
BR : Brown O : Orange GR : Grey R : Red P : Pink V : Violet PU : Purple

AC503844AB

## COMMENTS ON TROUBLE SYMPTOM

Input signal from the key reminder switch is used to operate the functions below. If the signal is abnormal, these functions will not work normally.

- Keyless entry system
- Keyless entry hazard answerback
- Ignition key cylinder illumination lamp
- Interior lamps

## POSSIBLE CAUSES

- Malfunction of the key reminder switch
- Malfunction of the ETACS-ECU
- Damaged harness wires and connectors

## DIAGNOSIS PROCEDURE

### Step 1. Connector check: C-308 key reminder switch connector

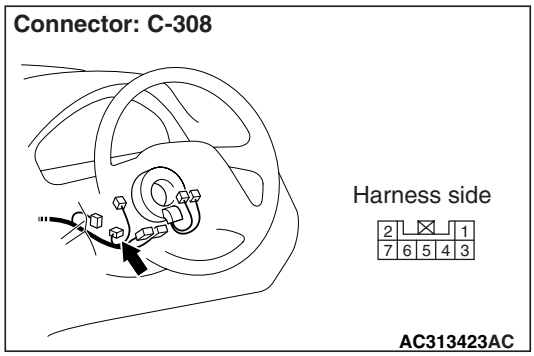


**Q: Is the check result normal?**
**YES :** Go to Step 2.
**NO :** Repair the defective connector.

Main Index
Group TOC

**Step 2. Check the key reminder switch.**

Refer to GROUP 54A – Ignition switch P.54A-49.

**Q: Is the check result normal?**

**YES :** Go to Step 3.

**NO :** Replace the key reminder switch.

**Step 3. Resistance measurement at the C-308 key reminder switch connector.**

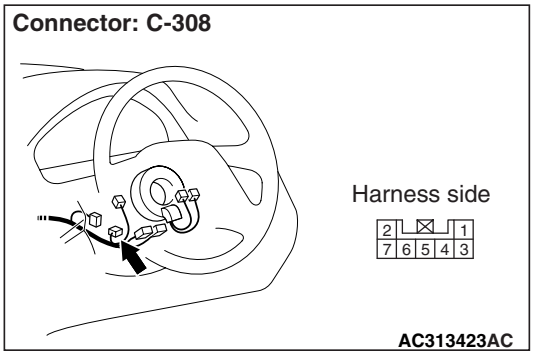


(1) Disconnect the connector, and measure at the wiring harness side.

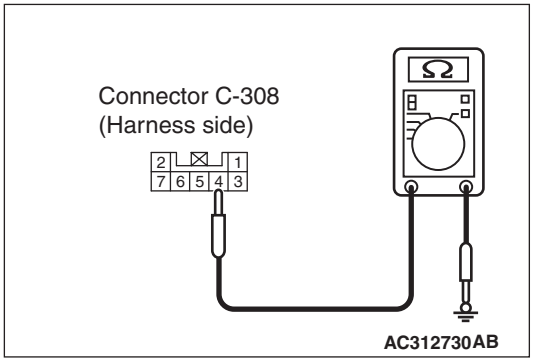


(2) Resistance between C-308 key reminder switch connector terminal No.6 and body earth

**OK: 2 Ω or less**

**Q: Is the check result normal?**

**YES :** Go to Step 5.

**NO :** Go to Step 4.

**Step 4. Check the wiring harness between C-308 key reminder switch connector terminal No.6 to the body earth.**

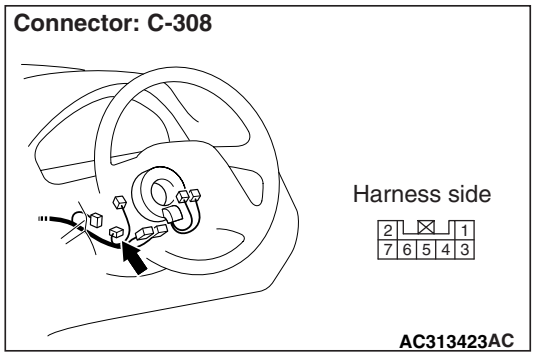


*NOTE:*

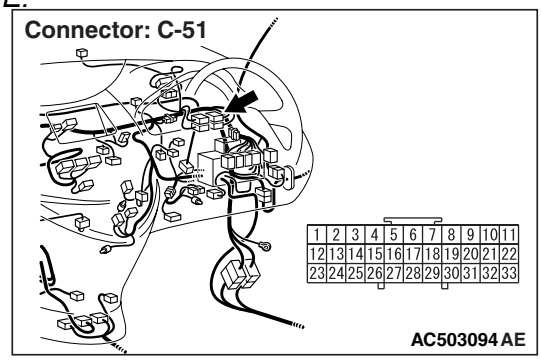


*Prior to the wiring harness inspection, check joint connector C-51, and repair if necessary.*

- Check the earth wires for open circuit.

**Q: Is the check result normal?**

**YES :** The trouble can be an intermittent malfunction (Refer to GROUP 00 – How to Cope with Intermittent Malfunction P.00-5).

**NO :** Repair the wiring harness.

**Step 5. Connector check: C-220 ETACS-ECU connector**

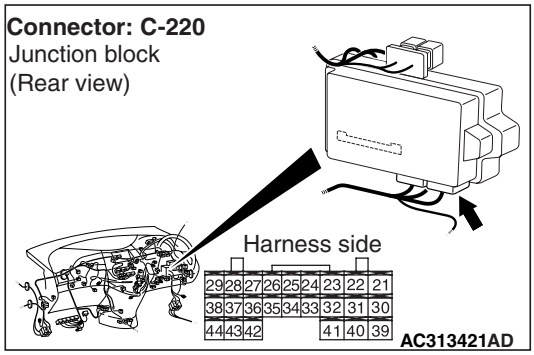


**Q: Is the check result normal?**

**YES :** Go to Step 6.

**NO :** Repair the defective connector.

Main Index
Group TOC

**Step 6. Check the wiring harness between C-308 key reminder switch connector terminal No.3 to C-220 ETACS-ECU connector terminal No.30.**

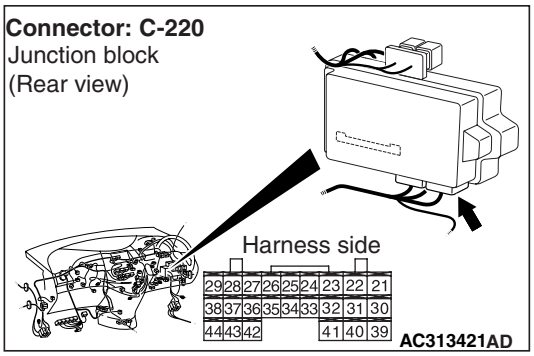


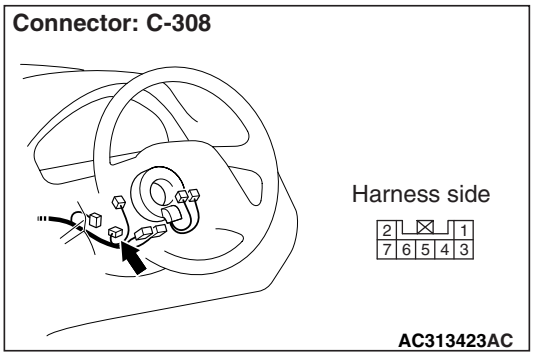


- Check the input line for open circuit.

**Q: Is the check result normal?**

**YES :** Go to Step 7.

**NO :** Repair the wiring harness.

**Step 7. ETACS switch data by using the SWS monitor**

Check the input signal from the key reminder switch.

- Key reminder switch: OFF (key inserted) to ON (key removed)

| Item No. | Item name | Normal condition |
|---|---|---|
| Item 3 | Key reminder switch | from OFF to ON |

**OK: Normal condition is displayed.**

**Q: Is the check result normal?**

**YES :** The trouble can be an intermittent malfunction (Refer to GROUP 00 – How to Cope with Intermittent Malfunction P.00-5).

**NO :** Replace the ETACS-ECU.

Main Index
Group TOC

## INSPECTION PROCEDURE P-11: The hazard warning lamp switch signal is not received.

**⚠ CAUTION**
**Whenever the ECU is replaced, ensure that the input signal circuit is normal.**

**Hazard Warning Lamp Switch Input Circuit**

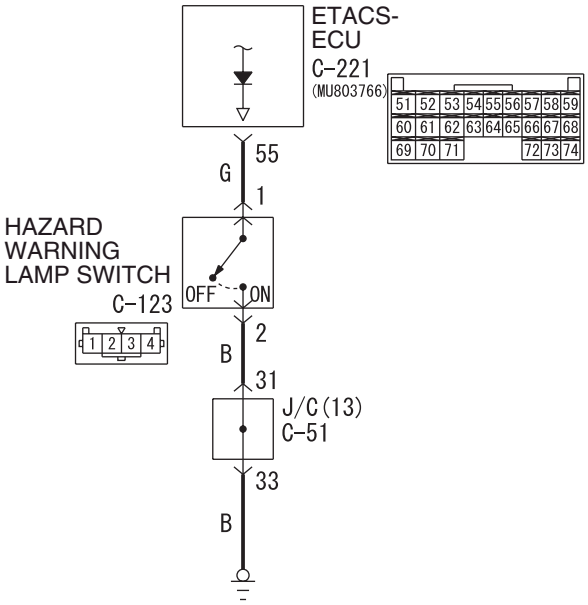


Wire colour code
B : Black LG : Light green G : Green L : Blue W : White Y : Yellow SB : Sky blue
BR : Brown O : Orange GR : Grey R : Red P : Pink V : Violet PU : Purple

W6X54X079A

## COMMENTS ON TROUBLE SYMPTOM

Input signal from the hazard warning lamp switch is used to operate the functions below. If the signal is abnormal, these functions will not work normally.

- Turn-signal lamp operation sound
- Keyless entry system (encrypted code registration)
- Keyless entry hazard answerback
- Hazard warning lamp

## POSSIBLE CAUSES

- Malfunction of the hazard warning lamp switch
- Malfunction of the ETACS-ECU
- Damaged harness wires and connectors

## DIAGNOSIS PROCEDURE

### Step 1. Connector check: C-123 hazard warning lamp switch connector

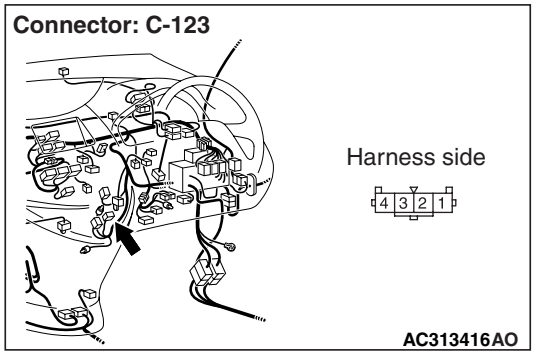


**Q: Is the check result normal?**
**YES :** Go to Step 2.
**NO :** Repair the defective connector.

Main Index
Group TOC

**Step 2. Check the hazard warning lamp switch.**
Refer to GROUP 54A – Hazard warning lamp switch P.54A-158.

**Q: Is the check result normal?**
**YES :** Go to Step 3.
**NO :** Replace the hazard warning lamp switch.

**Step 3. Resistance measurement at the C-123 hazard warning lamp switch connector.**

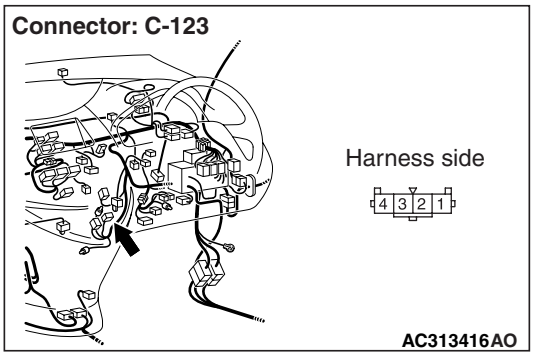


(1) Disconnect the connector, and measure at the wiring harness side.

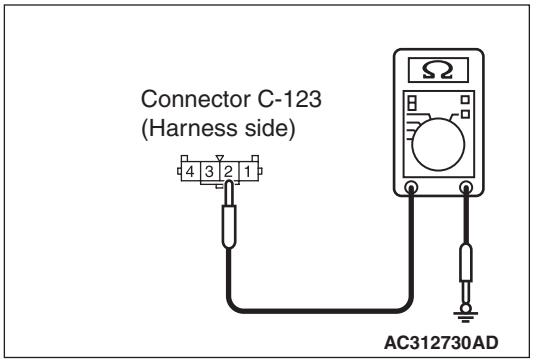


(2) Resistance between C-123 hazard warning lamp switch connector terminal No.2 and body earth

**OK: 2 Ω or less**

**Q: Is the check result normal?**
**YES :** Go to Step 5.
**NO :** Go to Step 4.

**Step 4. Check the wiring harness between C-123 hazard warning lamp switch connector terminal No.2 to the body earth.**

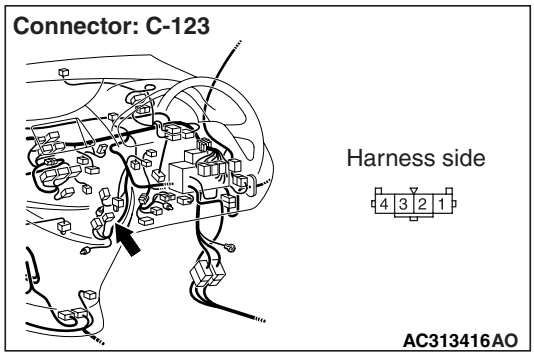


*NOTE:*

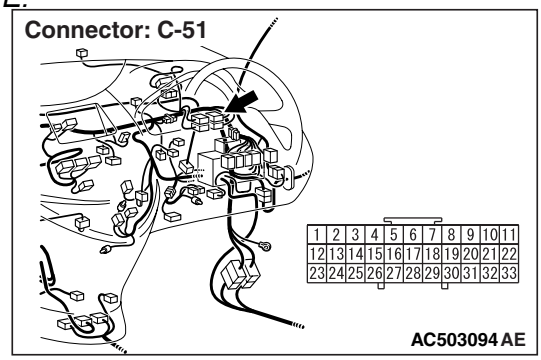


*Prior to the wiring harness inspection, check joint connector C-51, and repair if necessary.*

- Check the earth wires for open circuit.

**Q: Is the check result normal?**
**YES :** The trouble can be an intermittent malfunction (Refer to GROUP 00 – How to Cope with Intermittent Malfunction P.00-5).
**NO :** Repair the wiring harness.

**Step 5. Connector check: C-221 ETACS-ECU connector**

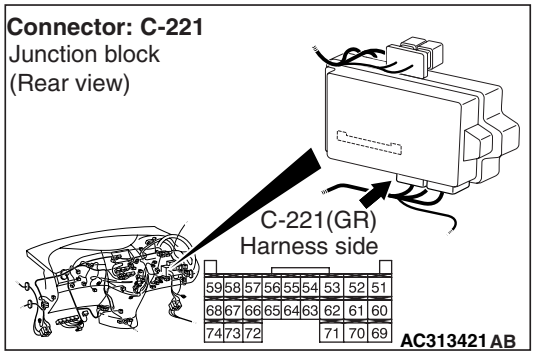


**Q: Is the check result normal?**
**YES :** Go to Step 6.
**NO :** Repair the defective connector.

Main Index
Group TOC

**Step 6. Check the wiring harness between C-221 ETACS-ECU connector terminal No.55 to C-123 hazard warning lamp switch connector terminal No.1.**

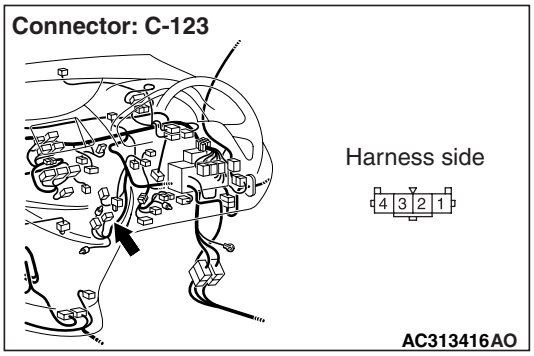


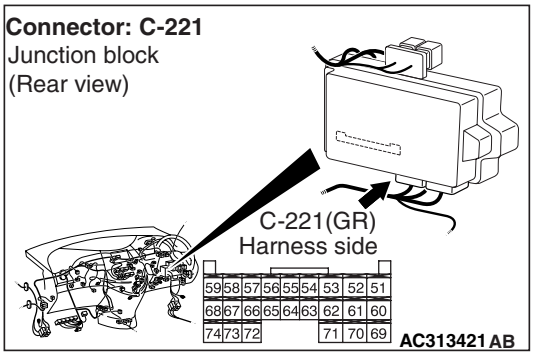


- Check the input line for open circuit.

**Q: Is the check result normal?**

**YES :** Go to Step 7.

**NO :** Repair the wiring harness.

**Step 7. ETACS switch data by using the SWS monitor**

Check the input signal from the hazard warning lamp switch.

- hazard warning lamp switch: from OFF to ON

| Item No. | Item name | Normal condition |
|---|---|---|
| Item 4 | Hazard lamp switch | OFF to ON (only when switch is operated) |

**OK: Normal condition is displayed.**

**Q: Is the check result normal?**

**YES :** The trouble can be an intermittent malfunction (Refer to GROUP 00 – How to Cope with Intermittent Malfunction P.00-5).

**NO :** Replace the ETACS-ECU.

Main Index
Group TOC

## INSPECTION PROCEDURE P-12: All the door switch signals are not received.

**⚠ CAUTION**

**Whenever the ECU is replaced, ensure that the input signal circuit is normal.**

**Door Switches Input Circuit**

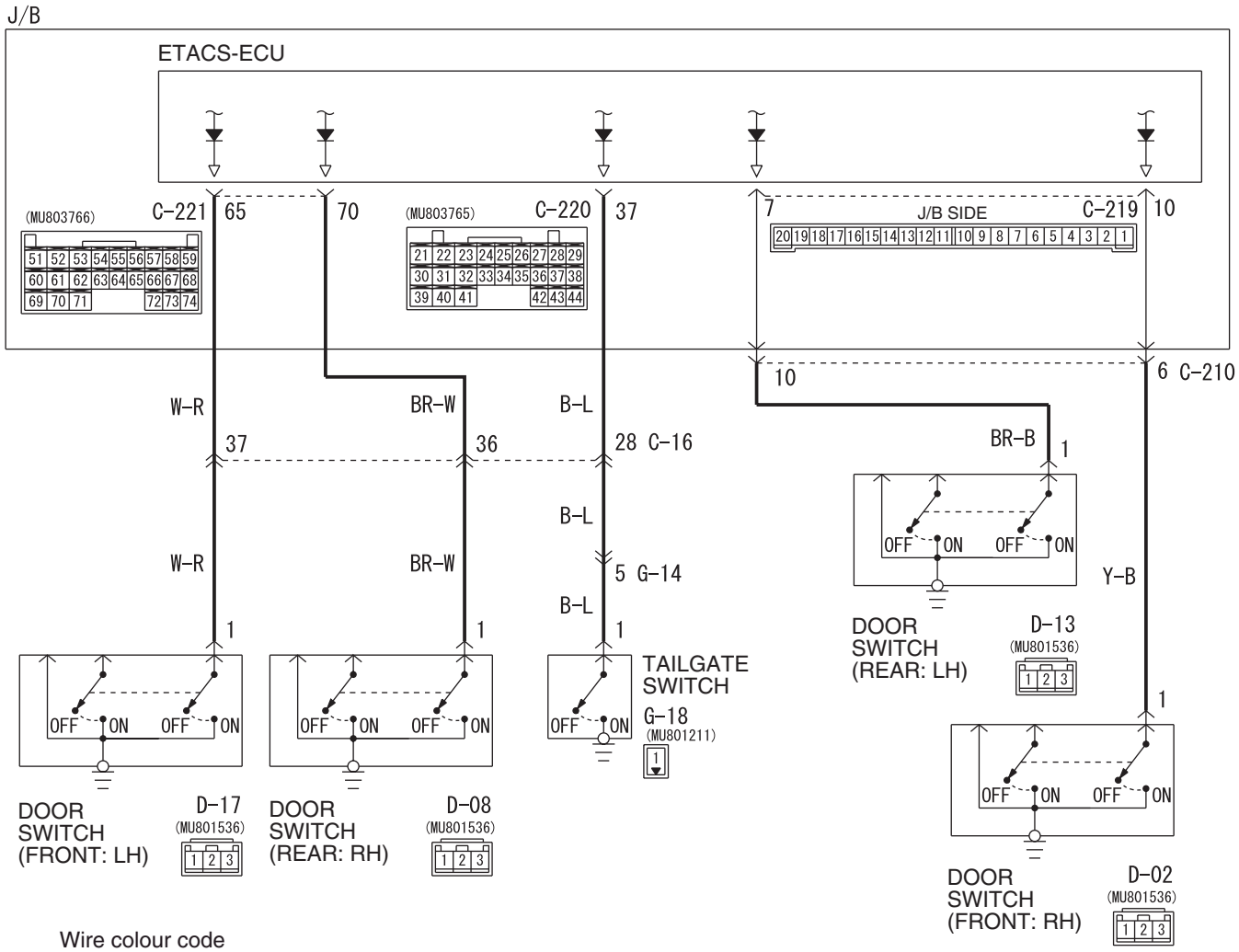


Wire colour code
B : Black LG : Light green G : Green L : Blue W : White Y : Yellow SB : Sky blue
BR : Brown O : Orange GR : Gray R : Red P : Pink V : Violet

W4X54X131A

## COMMENTS ON TROUBLE SYMPTOM

Input signals from all the door switches are used to operate the functions below. If the signal(s) are abnormal, these functions will not work normally.

- Door-ajar warning buzzer
- Keyless entry system
- Interior lamps
- Interior lamp automatic-shutdown
- Door-ajar warning lamp

## POSSIBLE CAUSES

- Malfunction of the door switches
- Malfunction of the ETACS-ECU
- Damaged harness wires and connectors

Main Index
Group TOC

## DIAGNOSIS PROCEDURE

### Step 1. SWS monitor data list

**<Selected item> ETACS ECU**

- Driver's door is open

| Item No. | Item name | Normal condition |
|---|---|---|
| Item 32 | DR DOOR SW | ON |

**OK: Normal condition is displayed.**

**Q: Is the check result normal?**

**YES :** Go to Step 2.

**NO :** Refer to inspection procedure P-4 "The driver's door switch signal is not received P.54E-298."

### Step 2. Connector check: D-17 (front: LH), D-08 (rear: RH) or D-13 (rear: LH) door switch connectors or G-18 <tailgate> tailgate switch connector, and C-219, C-220 and C-221 ETACS-ECU connector

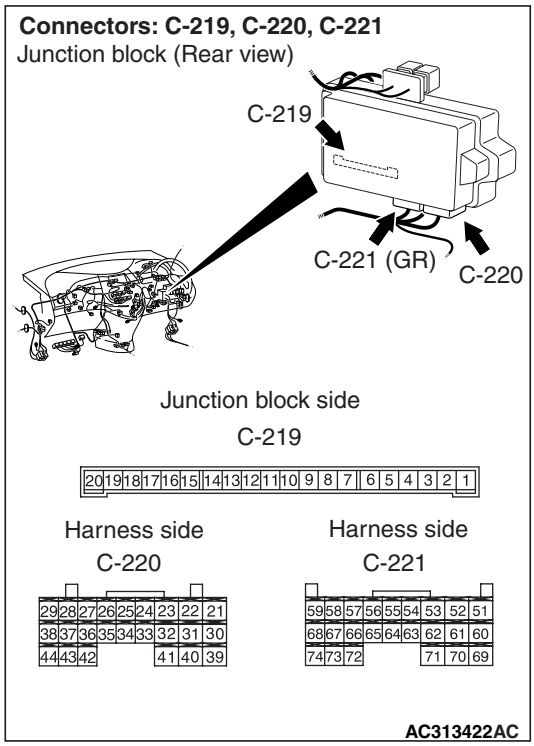


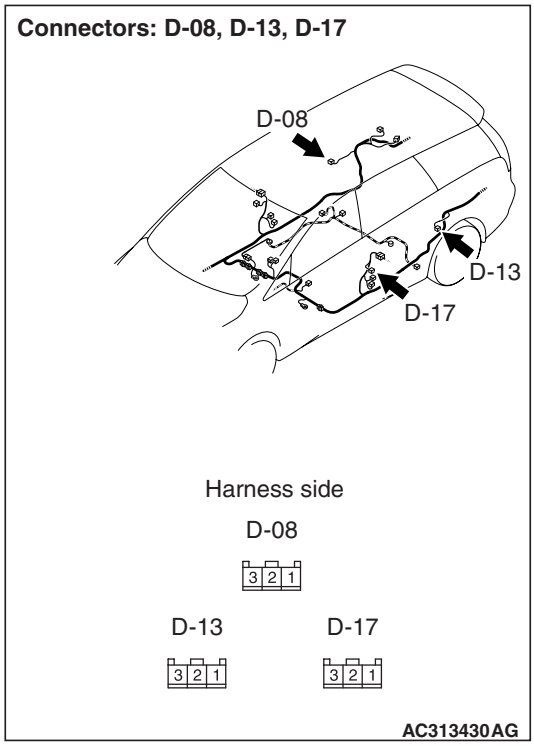

Main Index
Group TOC

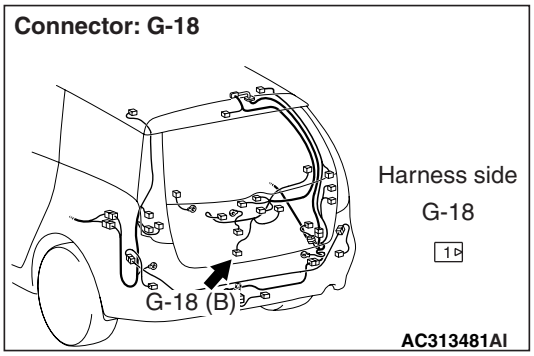


**Q: Is the check result normal?**
**YES :** Go to Step 3.
**NO :** Repair the defective connector.

**Step 3. Check the installation condition.**
Check that the door switch is installed on the body correctly.

**Q: Is the check result normal?**
**YES :** Go to Step 4.
**NO :** Correct the installation condition.

**Step 4. Check the door switch.**
Refer to GROUP 42 – Door P.42-36.

**Q: Is the check result normal?**
**YES :** Go to Step 5.
**NO :** Replace the door switch.

**Step 5. Check the wiring harness from terminal No.1 of the D-17 (front: LH), D-08 (rear: RH) or D-13 (rear: LH) door switch connector or terminal No.1 of the G-18 tailgate switch connector to terminal No.65 (front: LH), No.70 (rear: RH), No.7 (rear: LH) or No.37 (tailgate) of the C-219, C-220 and C-221 ETACS-ECU connector.**

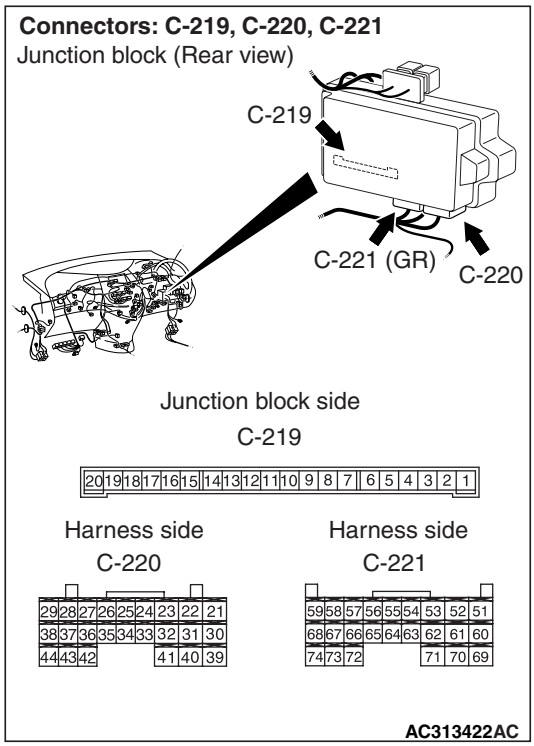


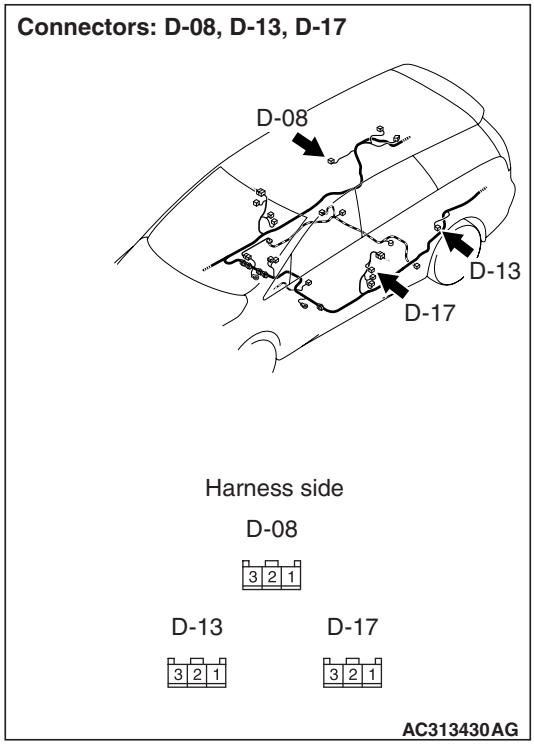

Main Index
Group TOC

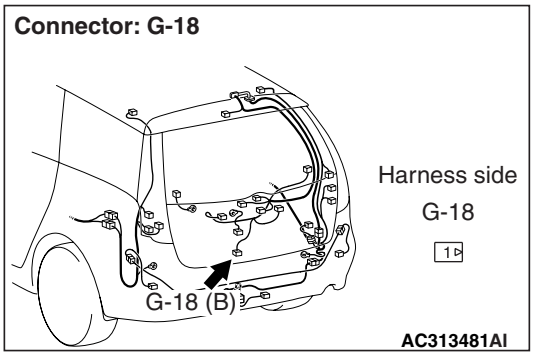


*NOTE:*

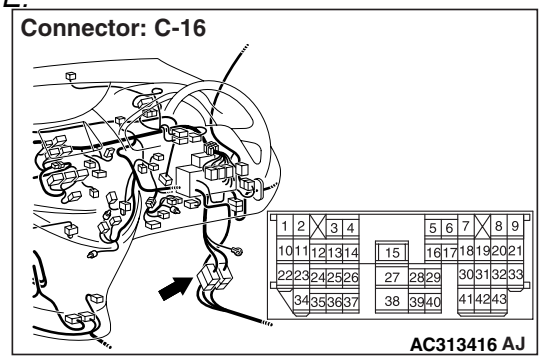


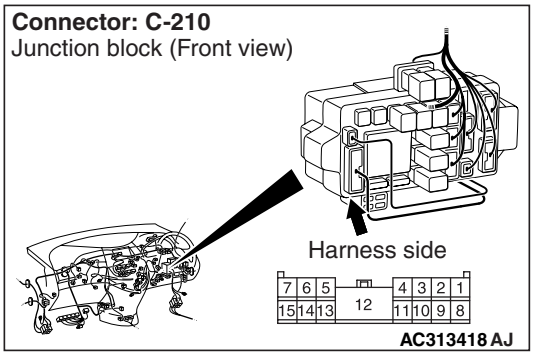


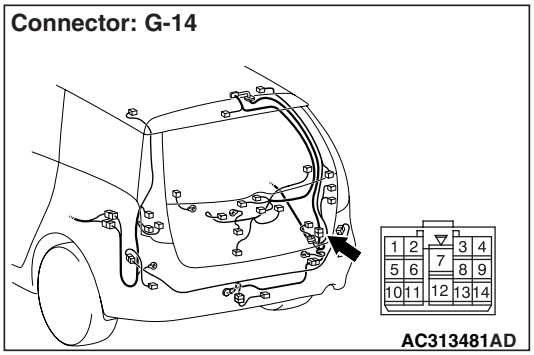


*Prior to the wiring harness inspection, check intermediate connector C-16 (front: LH, rear: RH and tailgate) or G-14 <tailgate> and junction block connector C-210 (rear: LH) and repair if necessary.*

- Check the input line for open circuit.

**Q: Is the check result normal?**

**YES :** Go to Step 6.

**NO :** Repair the wiring harness between each of the door switches and the ETACS-ECU.

**Step 6. ETACS switch data by using the SWS monitor**

Check the input signals from the door switches.

- Doors other than the driver's door: Closed to open

| Item No. | Item name | Normal condition |
|---|---|---|
| Item 5 | Passenger's door switch | from OFF to ON |
| Item 41 | Rear door (right side) switch | from OFF to ON |
| Item 42 | Rear door (left side) switch | from OFF to ON |

**OK: Normal conditions are displayed for all the items.**

**Q: Is the check result normal?**

**YES :** The trouble can be an intermittent malfunction (Refer to GROUP 00 – How to Cope with Intermittent Malfunction P.00-5).

**NO :** Replace the ETACS-ECU.

Main Index
Group TOC

## INSPECTION PROCEDURE P-13: The driver's door lock actuator switch signal is not received.

**⚠ CAUTION**

**Whenever the ECU is replaced, ensure that the input signal circuit is normal.**

**Door Lock Actuator Input Circuit**

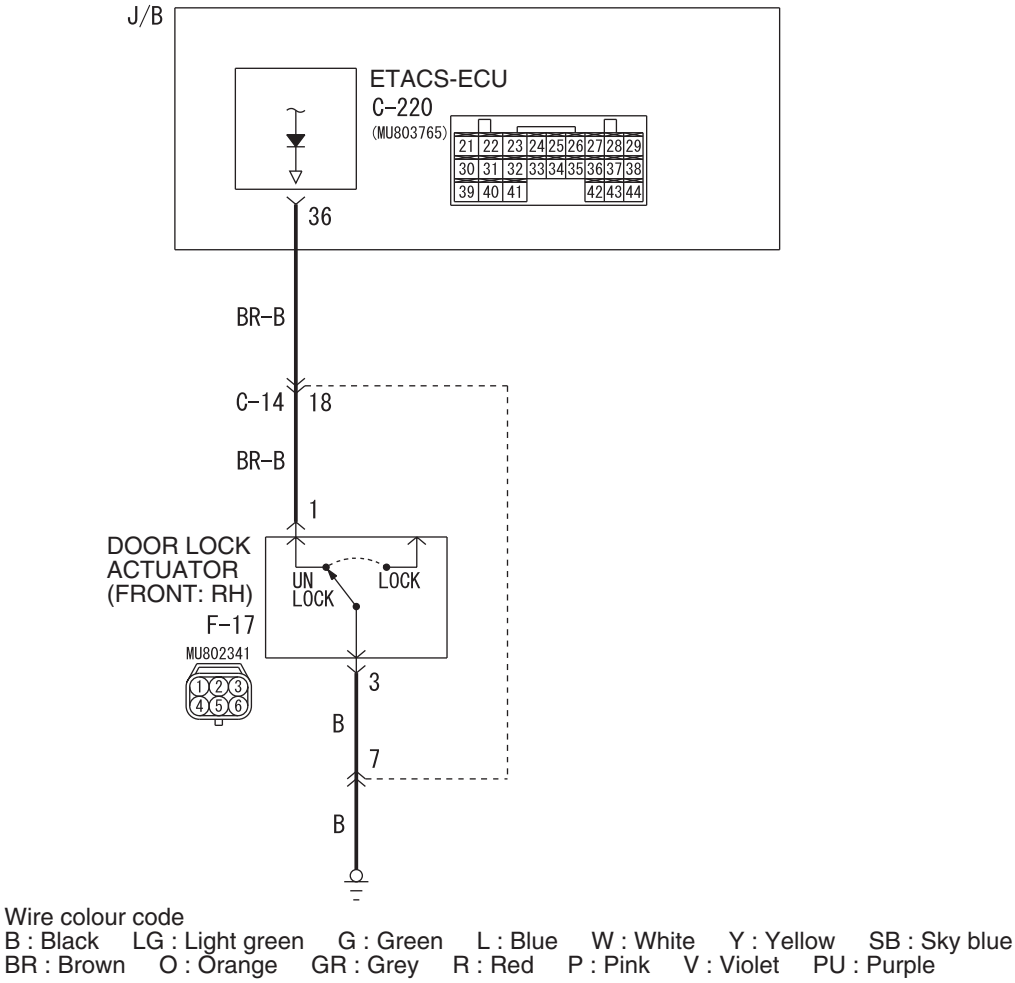


Wire colour code
B : Black LG : Light green G : Green L : Blue W : White Y : Yellow SB : Sky blue
BR : Brown O : Orange GR : Grey R : Red P : Pink V : Violet PU : Purple

W6X54X080A

## COMMENTS ON TROUBLE SYMPTOM

Input signal from the driver's door lock actuator is used to operate the functions below. If the signal is abnormal, these functions will not work normally.

- Central door locking
- Interior lamps

## POSSIBLE CAUSES

- Malfunction of the door lock actuator (front: RH)
- Malfunction of the ETACS-ECU
- Damaged harness wires and connectors

Main Index
Group TOC

## DIAGNOSIS PROCEDURE

### Step 1. Connector check: F-17 door lock actuator (front: RH) connector

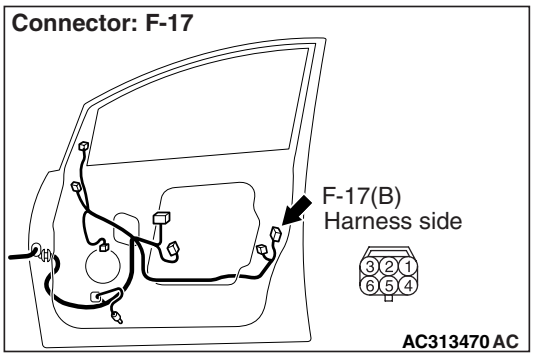


**Q: Is the check result normal?**
**YES :** Go to Step 2.
**NO :** Repair the defective connector.

### Step 2. Check the door lock actuator (front: RH).

Refer to GROUP 42 – Door P.42-45.

**Q: Is the check result normal?**
**YES :** Go to Step 3.
**NO :** Replace the door lock actuator (front: RH).

### Step 3. Resistance measurement at the F-17 door lock actuator (front: RH) connector

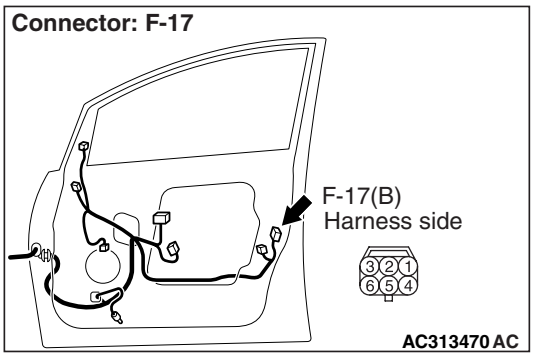


(1) Disconnect the connector, and measure at the wiring harness side.

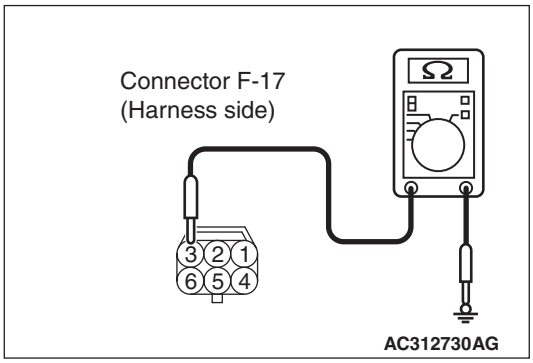


(2) Resistance between F-17 door lock actuator (front: RH) connector terminal No.3 and body earth

**OK: 2 Ω or less**

**Q: Is the check result normal?**
**YES :** Go to Step 5.
**NO :** Go to Step 4.

### Step 4. Check the wiring harness between F-17 door lock actuator (front: RH) connector terminal No.3 to body earth

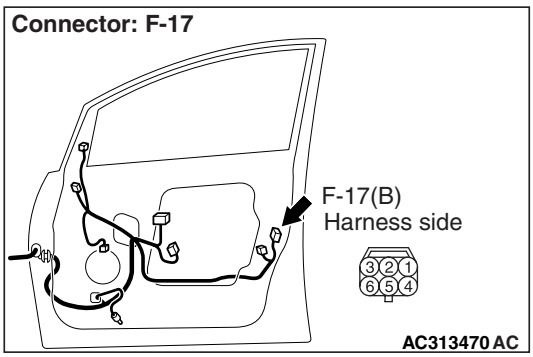


*NOTE:*

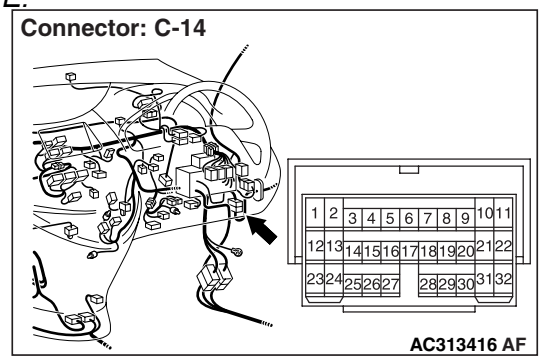


*Prior to the wiring harness inspection, check intermediate connector C-14, and repair if necessary.*

- Check the earth wires for open circuit.

**Q: Is the check result normal?**
**YES :** The trouble can be an intermittent malfunction (Refer to GROUP 00 – How to Cope with Intermittent Malfunction P.00-5).
**NO :** Repair the wiring harness.

Main Index
Group TOC

### Step 5. Connector check: C-220 ETACS-ECU connector

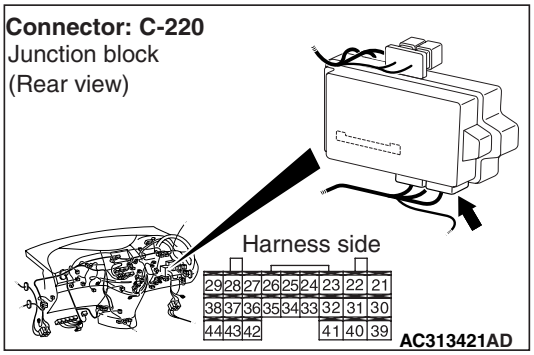


**Q: Is the check result normal?**
**YES :** Go to Step 6.
**NO :** Repair the defective connector.

### Step 6. Check the wiring harness from F-17 door lock actuator (front: RH) connector terminal No.1 to C-220 ETACS-ECU connector terminal No.36.

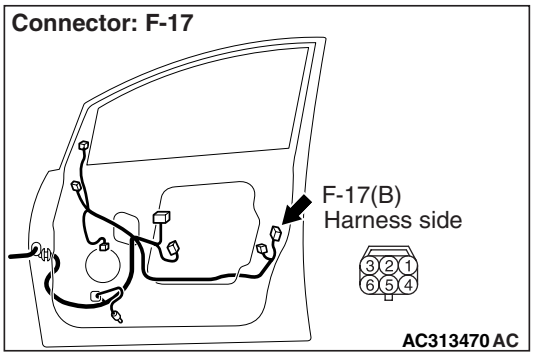


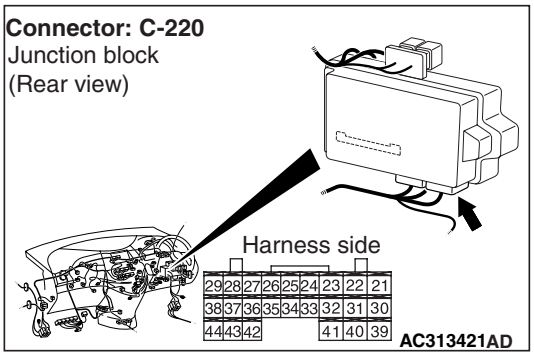


*NOTE:*

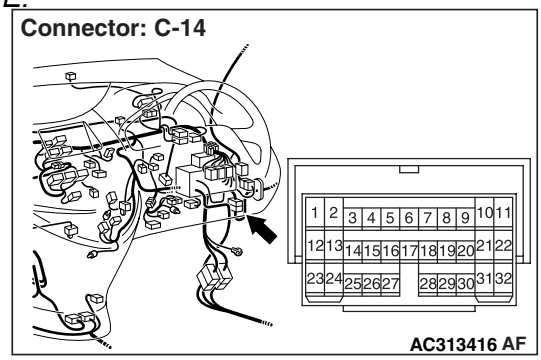


*Prior to the wiring harness inspection, check intermediate connector C-14, and repair if necessary.*

- Check the input line for open circuit.

**Q: Is the check result normal?**
**YES :** Go to Step 7.
**NO :** Repair the wiring harness.

### Step 7. ETACS switch data by using the SWS monitor

Check the input signal from the driver's door lock actuator switch.

- Driver's door lock actuator switch: LOCK → UNLOCK

| Item No. | Item name | Normal conditions |
|---|---|---|
| Item 21 | Dr door lock actuator lock SW | ON → OFF |

**OK: Normal conditions are displayed for all the items.**

**Q: Is the check result normal?**
**YES :** The trouble can be an intermittent malfunction (Refer to GROUP 00 – How to Cope with Intermittent Malfunction P.00-5).
**NO :** Replace the ETACS-ECU.

Main Index
Group TOC

**INSPECTION PROCEDURE P-14: The signal from the central door lock switch (incorporated with the power windows main switch) is not received.**

**⚠ CAUTION**
**Whenever the ECU is replaced, ensure that the input signal circuit is normal.**

**Door Lock Switch Input Circuit**

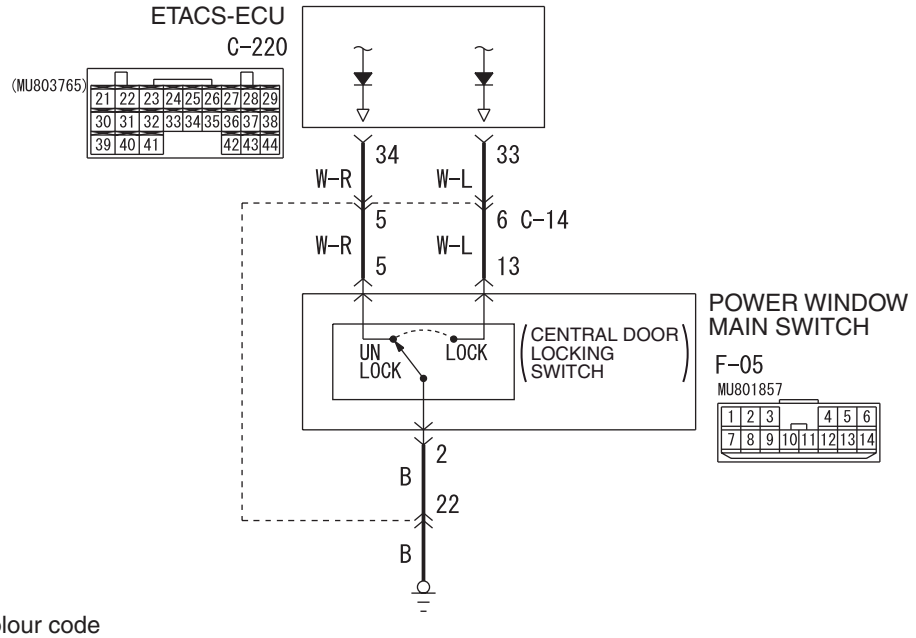


Wire colour code
B : Black LG : Light green G : Green L : Blue W : White Y : Yellow SB : Sky blue
BR : Brown O : Orange GR : Grey R : Red P : Pink V : Violet PU : Purple

W6X54X081A

## COMMENTS ON TROUBLE SYMPTOM

Input signal from the central door lock switch (incorporated with the power window main switch) is used to operate the central door locking function. If the signal is abnormal, the central door locking function will not work normally.

## POSSIBLE CAUSES

- The central door lock switch (built into the power window main switch) is defective.
- Malfunction of the ETACS-ECU
- Damaged harness wires and connectors

## DIAGNOSIS PROCEDURE

### Step 1. Connector check: F-05 power window main switch connector

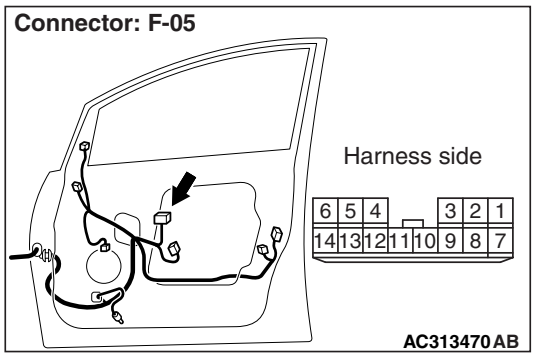


**Q: Is the check result normal?**
**YES :** Go to Step 2.
**NO :** Repair the defective connector.

Main Index
Group TOC

**Step 2. Check the central door lock switch (incorporated with the power window main switch).**

Refer to GROUP 42 – Door P.42-45.

**Q: Is the check result normal?**

**YES :** Go to Step 3.

**NO :** Replace the power window main switch.

**Step 3. Resistance measurement at the F-05 power window main switch connector.**

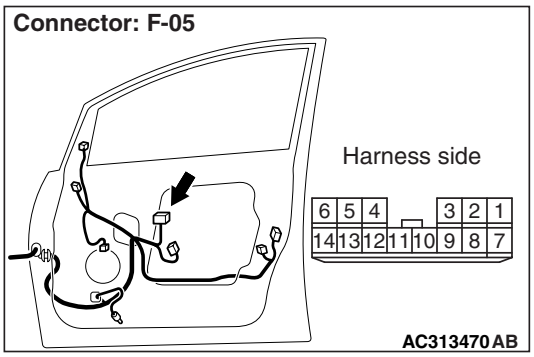


(1) Disconnect the connector, and measure at the wiring harness side.

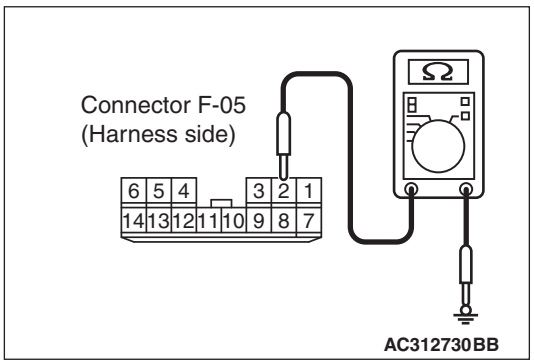


(2) Resistance between F-05 power window main switch connector terminal No.2 and body earth

**OK: 2 Ω or less**

**Q: Is the check result normal?**

**YES :** Go to Step 5.

**NO :** Go to Step 4.

**Step 4. Check the wiring harness between F-05 power window main switch connector terminal No.2 to body earth.**

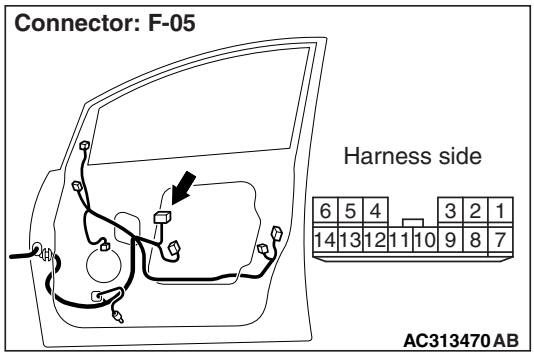


*NOTE:*

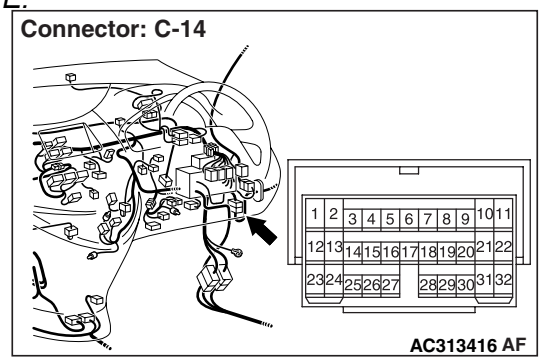


*Prior to the wiring harness inspection, check intermediate connector C-14, and repair if necessary.*

- Check the earth wires for open circuit.

**Q: Is the check result normal?**

**YES :** Intermittent malfunction (Refer to GROUP 00 – How to Cope with Intermittent Malfunction P.00-5).

**NO :** Repair the wiring harness.

**Step 5. Connector check: C-220 ETACS-ECU connector**

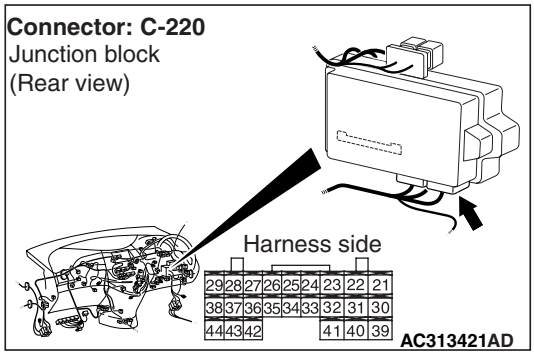


**Q: Is the check result normal?**

**YES :** Go to Step 6.

**NO :** Repair the defective connector.

Main Index
Group TOC

**Step 6. Check the wiring harness from F-05 power window main switch connector terminal Nos. 5 and 13 to C-220 ETACS-ECU connector terminal Nos. 34 and 33.**

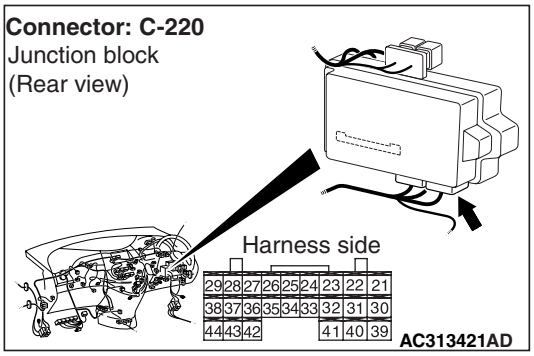


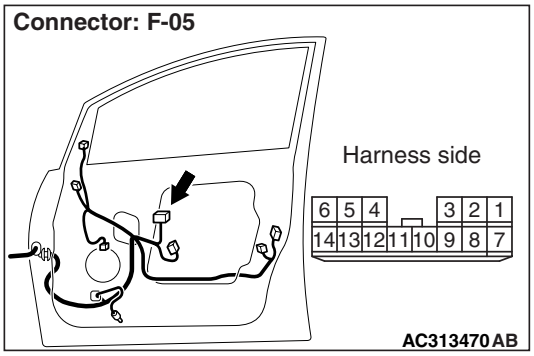


*NOTE:*

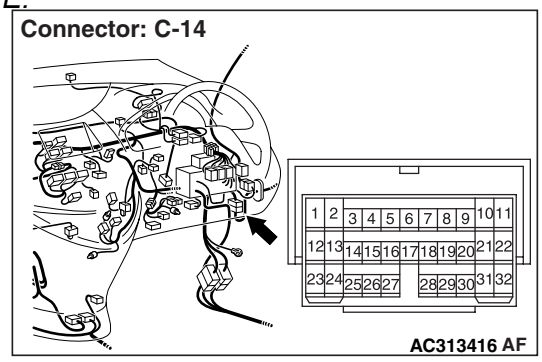


*Prior to the wiring harness inspection, check intermediate connector C-14, and repair if necessary.*

- Check the input line for open circuit.

**Q: Is the check result normal?**

**YES :** Go to Step 7.

**NO :** Repair the wiring harness.

**Step 7. ETACS switch data by using the SWS monitor**

Check the input signal from the passenger's door lock key switch.

- Door lock switch: Neutral to lock

| Item No. | Item name | Normal condition |
|---|---|---|
| Item 26 | Centre door lock switch | ON (only when operated to lock) |
| Item 27 | Centre door unlock switch | OFF |

- Door lock switch: Neutral to unlock

| Item No. | Item name | Normal condition |
|---|---|---|
| Item 26 | Centre door lock switch | OFF |
| Item 27 | Centre door unlock switch | ON (only when operated to unlock) |

**OK: Normal conditions are displayed for all the items.**

**Q: Are the check result normal?**

**YES :** The trouble can be an intermittent malfunction (Refer to GROUP 00 – How to Cope with Intermittent Malfunction P.00-5).

**NO :** Replace the ETACS-ECU.

Main Index
Group TOC

## INSPECTION PROCEDURE P-15: The tailgate lock release handle signal is not received.

**⚠ CAUTION**
**Whenever the ECU is replaced, ensure that the input signal circuit is normal.**

**Tailgate Lock Release Handle Input Circuit**

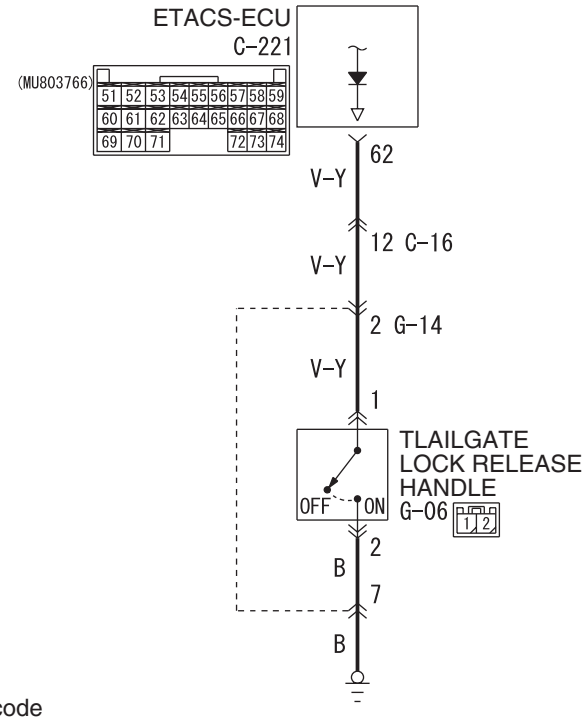


Wire colour code
B : Black LG : Light green G : Green L : Blue W : White Y : Yellow SB : Sky blue
BR : Brown O : Orange GR : Gray R : Red P : Pink V : Violet

W4X54E188A

## COMMENTS ON TROUBLE SYMPTOM

Input signal from the tailgate lock release handle is used to operate the central door locking function. If the signal is abnormal, the central door locking function will not work normally.

## POSSIBLE CAUSES

- Malfunction of the tailgate lock release handle
- Malfunction of the ETACS-ECU
- Damaged harness wires and connectors

## DIAGNOSIS PROCEDURE

### Step 1. Connector check: G-06 tailgate lock release handle connector

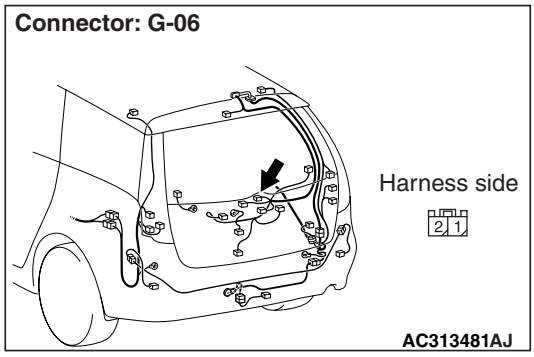


**Q: Is the check result normal?**
**YES :** Go to Step 2.
**NO :** Repair the defective connector.

**Step 2. Check the tailgate lock release handle.**
Refer to GROUP 42 – TailgateP.42-45.

**Q: Is the check result normal?**
**YES :** Go to Step 3
**NO :** Replace the tailgate lock release handle.

**Step 3. Resistance measurement at the G-06 tailgate lock release handle connector**

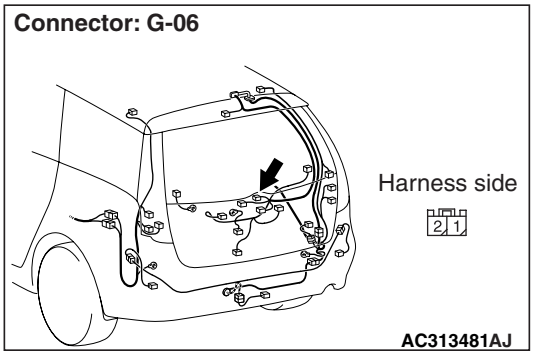


(1) Disconnect the connector, and measure at the wiring harness side.

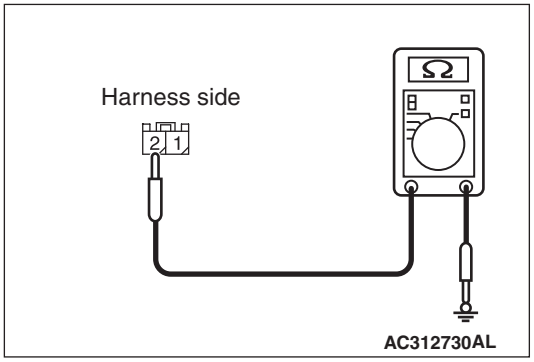


(2) Resistance between G-06 tailgate lock release handle connector terminal No.2 and body earth

**OK: 2 Ω or less**

**Q: Is the check result normal?**
**YES :** Go to Step 5.
**NO :** Go to Step 4.

**Step 4. Check the wiring harness between G-06 tailgate lock release handle connector terminal No.2 to body earth**

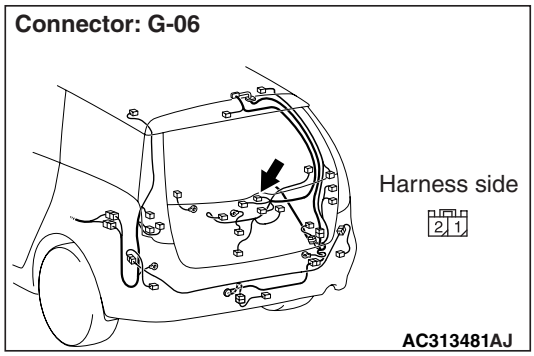


*NOTE:*

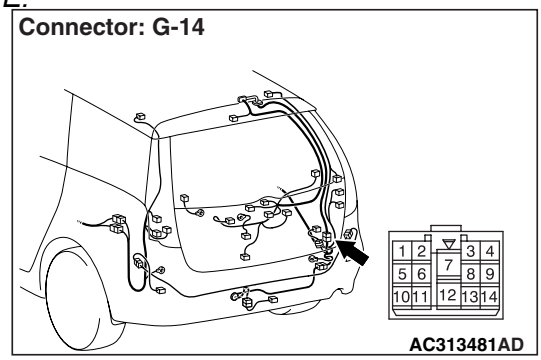


*Prior to the wiring harness inspection, check intermediate connector G-14, and repair if necessary.*

- Check the earth wires for open circuit.

**Q: Is the check result normal?**
**YES :** The trouble can be an intermittent malfunction (Refer to GROUP 00 – How to Cope with Intermittent Malfunction P.00-5).
**NO :** Repair the wiring harness.

**Step 5. Connector check: C-221 ETACS-ECU connector**

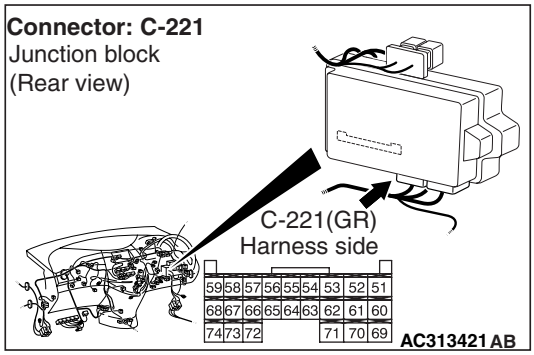


**Q: Is the check result normal?**
**YES :** Go to Step 6.
**NO :** Repair the defective connector.

Main Index
Group TOC

**Step 6. Check the wiring harness from G-06 tailgate lock release handle connector terminal No.1 to C-221 ETACS-ECU connector terminal No.62.**

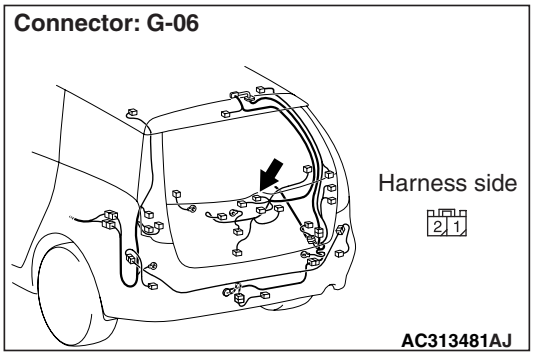


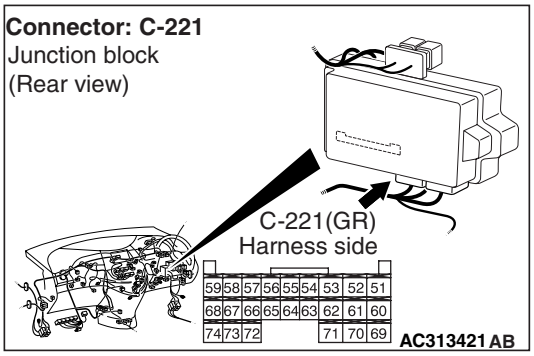


*NOTE:*

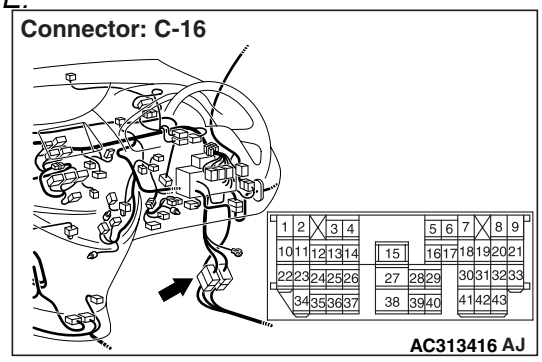


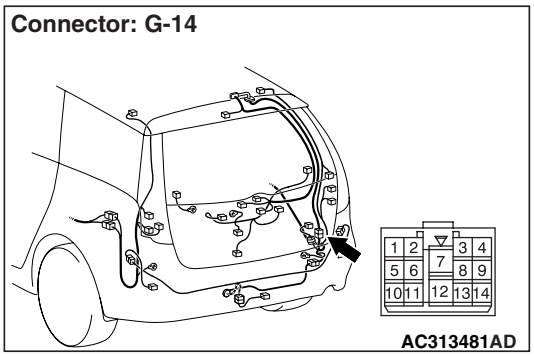


*Prior to the wiring harness inspection, check intermediate connector C-16, G-14 and repair if necessary.*

- Check the input line for open circuit.

**Q: Is the check result normal?**

**YES :** Go to Step 7.

**NO :** Repair the wiring harness.

**Step 7. ETACS switch data by using the SWS monitor**

Check the input signal from the Tailgate lock release handle.

- Tailgate lock release handle: from OFF to ON

| Item No. | Item name | Normal conditions |
|---|---|---|
| Item 30 | Gate opener switch | OFF to ON (only when switch is operated) |

**OK: Normal condition is displayed.**

**Q: Is the check result normal?**

**YES :** The trouble can be an intermittent malfunction (Refer to GROUP 00 – How to Cope with Intermittent Malfunction P.00-5).

**NO :** Replace the ETACS-ECU.

Main Index
Group TOC

## INSPECTION PROCEDURE P-16: Signal is not received from the remote controlled mirror switch (folding/unfolding switch).

**⚠ CAUTION**
**Whenever the ECU is replaced, ensure that the input signal circuit is normal.**

**Remote Controlled Mirror Switch Input Circuit**

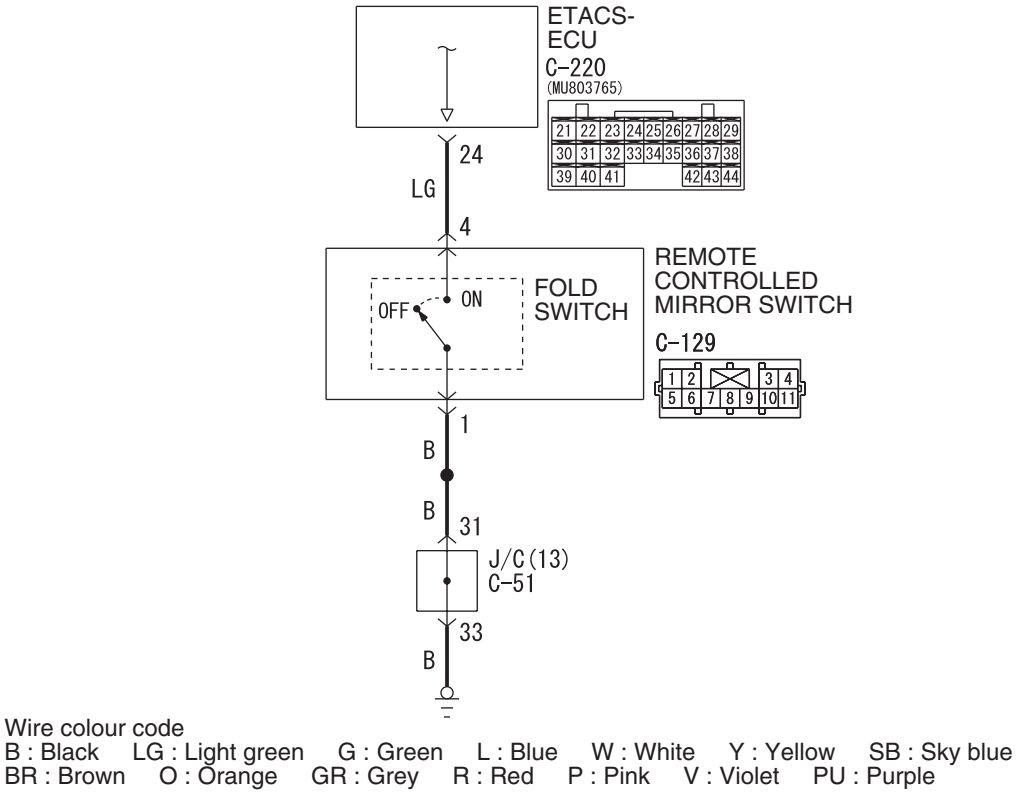


## COMMENTS ON TROUBLE SYMPTOM

The electric-folding door mirrors work in accordance with the input signal from the remote controlled mirror switch. If the input signal is abnormal, the door mirrors will not work normally.

## POSSIBLE CAUSES

- Malfunction of the remote controlled mirror switch
- Malfunction of the ETACS-ECU
- Damaged harness wires and connectors

Main Index
Group TOC

## DIAGNOSIS PROCEDURE

**Step 1. Connector check: C-129 remote controlled mirror switch connector**

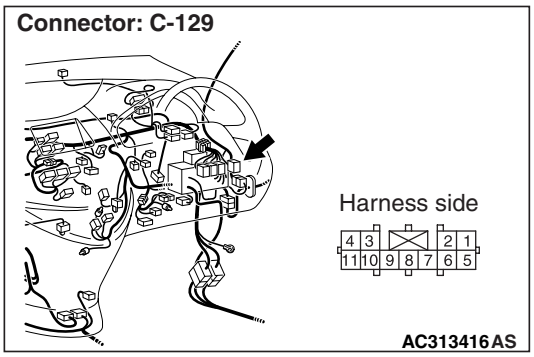


**Q: Is the check result normal?**
**YES :** Go to Step 2.
**NO :** Repair the connector.

**Step 2. Check the remote controlled mirror switch.**
Refer to GROUP 51 – Door mirror P.51-38.

**Q: Is the check result normal?**
**YES :** Go to Step 3.
**NO :** Replace the remote controlled mirror switch.

**Step 3. Resistance measurement at the C-129 remote controlled mirror switch connector.**

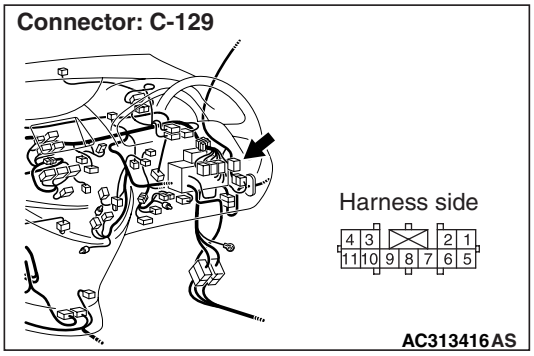


(1) Disconnect the connector, and measure at the wiring harness side.

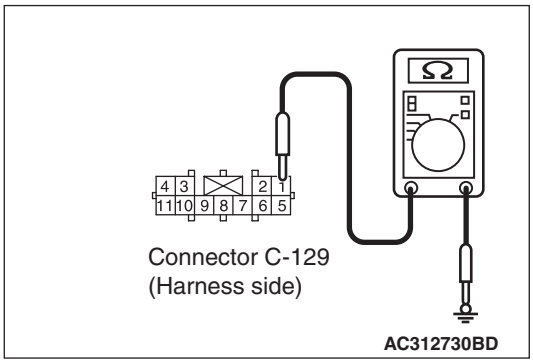


(2) Continuity between C-129 remote controlled mirror switch connector terminal No.1 and body earth

**OK: 2Ω or less**

**Q: Is the check result normal?**
**YES :** Go to Step 5.
**NO :** Go to Step 4.

**Step 4. Check the wiring harness between C-129 remote controlled mirror switch connector terminal No.1 to body earth.**

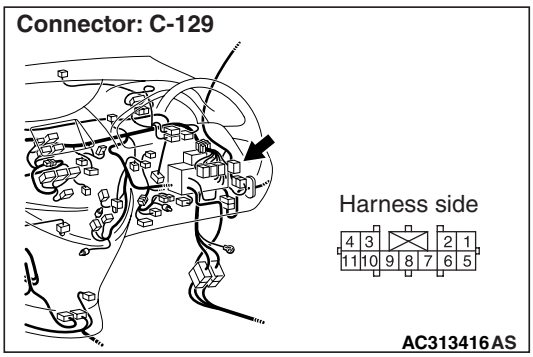


*NOTE:*

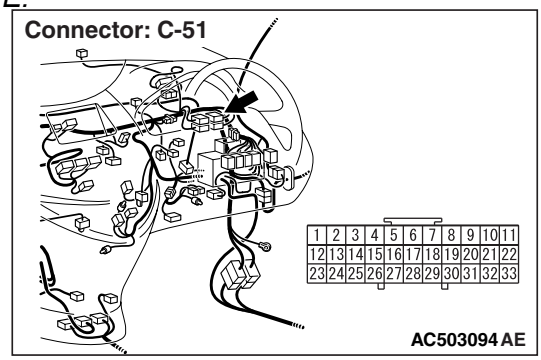


*Prior to the wiring harness inspection, check joint connector C-51, and repair if necessary.*

- Check the earth wires for open circuit.

**Q: Is the check result normal?**
**YES :** The trouble can be an intermittent malfunction (Refer to GROUP 00 – How to Cope with Intermittent Malfunction P.00-5).
**NO :** Repair the wiring harness.

Main Index
Group TOC

### Step 5. Connector check: C-220 ETACS-ECU connector

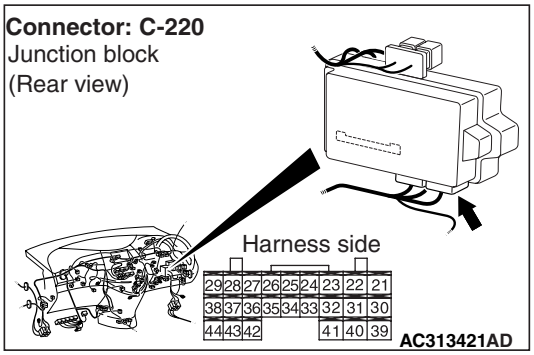


**Q: Is the check result normal?**
**YES :** Go to Step 6.
**NO :** Repair the connector.

### Step 6. Check the wiring harness between C-129 remote controlled mirror switch connector terminal No.4 to C-220 ETACS-ECU connector terminal No.24.

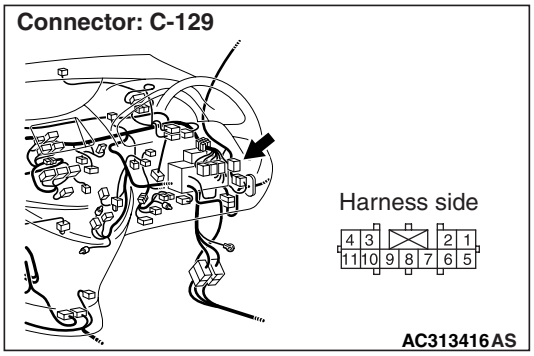


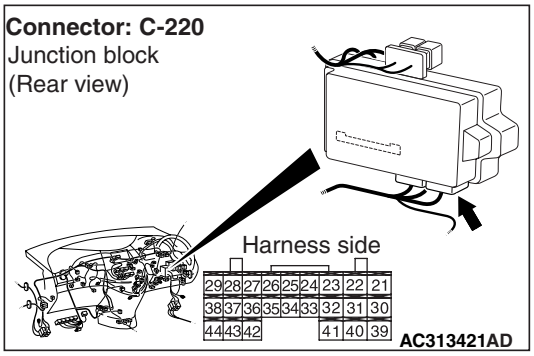


- Check the input line for open circuit.

**Q: Is the check result normal?**
**YES :** Go to Step 7.
**NO :** Repair the wiring harness.

### Step 7. ETACS switch data by using the SWS monitor

Check the input signal from the remote controlled mirror switch.

- Ignition switch: ON
- Remote controlled mirror (folding/unfolding) switch: from OFF to ON

| Item No. | Item name | Normal conditions |
|---|---|---|
| Item 14 | Retractable mirror switch | OFF to ON (only when switch is operated) |

**OK: Normal condition is displayed.**

**Q: Is the check result normal?**
**YES :** The trouble can be an intermittent malfunction (Refer to GROUP 00 – How to Cope with Intermittent Malfunction P.00-5).
**NO :** Replace the ETACS-ECU.

Main Index
Group TOC

## INSPECTION PROCEDURE P-17: The interior lamp "all on" or "all off" switch signal is not sent to the ETACS-ECU.

**⚠ CAUTION**

**Whenever the ECU is replaced, ensure that the input signal circuit is normal.**

**Interior Lamp Switch Input Circuit**

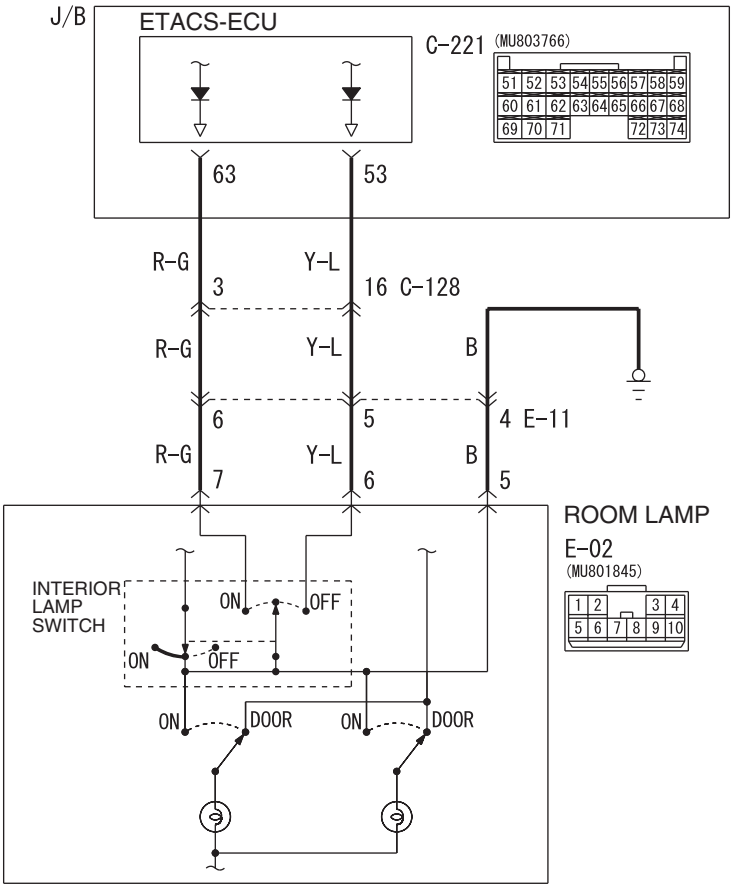


Wire colour code
B : Black LG : Light green G : Green L : Blue W : White Y : Yellow SB : Sky blue
BR : Brown O : Orange GR : Grey R : Red P : Pink V : Violet PU : Purple

W6X54X083A

## COMMENTS ON TROUBLE SYMPTOM

Input signals from the interior lamp switches are used to operate the interior lamps. If the signals are abnormal, the interior lamps will not illuminate and extinguish normally.

## POSSIBLE CAUSES

- Malfunction of the room lamp
- Malfunction of the ETACS-ECU
- Damaged harness wires and connectors

Main Index
Group TOC

## DIAGNOSIS PROCEDURE

### Step 1. Connector check: E-02 room lamp connector

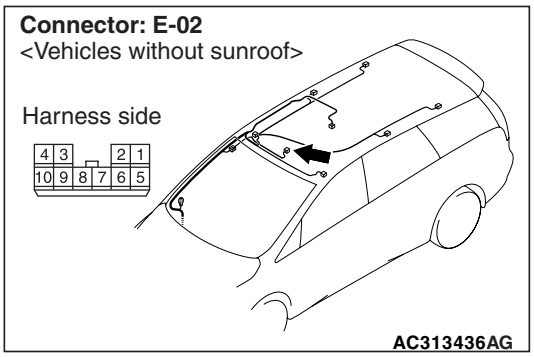


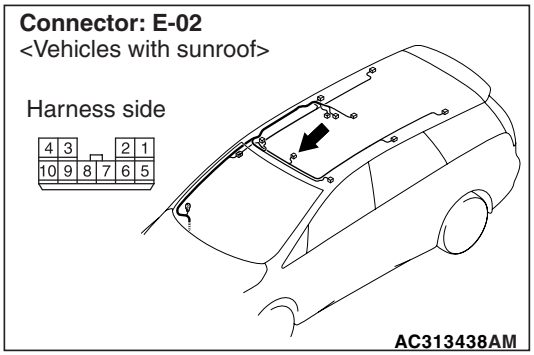


**Q: Is the check result normal?**
**YES :** Go to Step 2.
**NO :** Repair the defective connector.

### Step 2. Check the room lamp.

Refer to GROUP 54A – Room lamp P.54A-151.

**Q: Is the check result normal?**
**YES :** Go to Step 3
**NO :** Replace the room lamp.

### Step 3. Resistance measurement at the E-02 room lamp connector

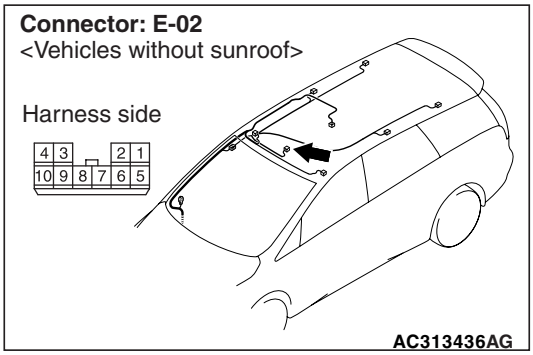


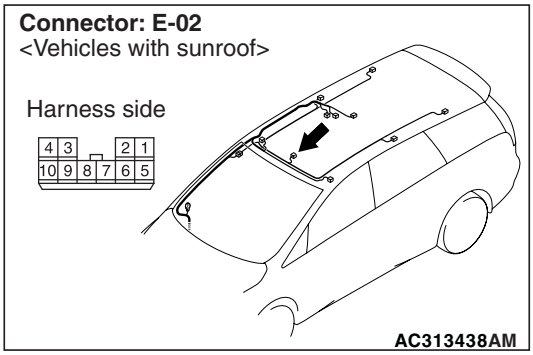


(1) Disconnect the connector, and measure at the wiring harness side.

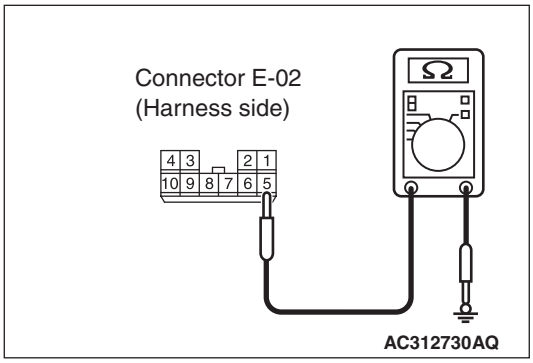


(2) Resistance between E-02 room lamp connector terminal No.5 and body earth

**OK: 2 Ω or less**

**Q: Is the check result normal?**
**YES :** Go to Step 5.
**NO :** Go to Step 4.

Main Index
Group TOC

### Step 4. Check the wiring harness between E-02 room lamp connector terminal No.5 to body earth

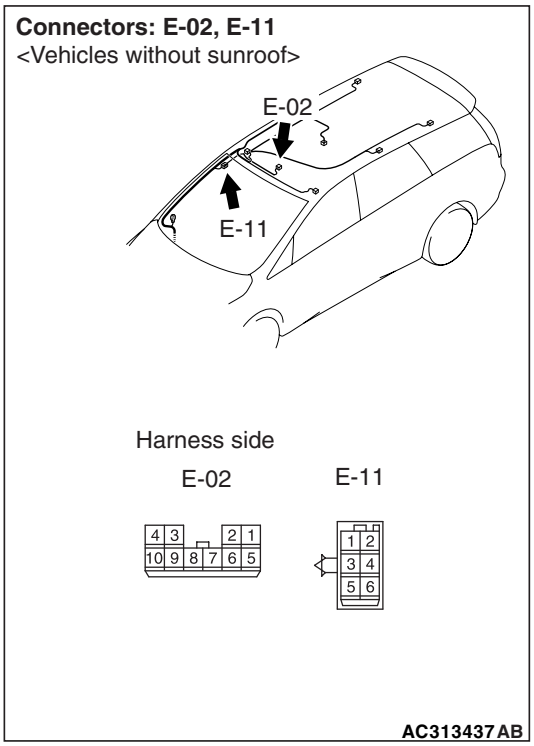


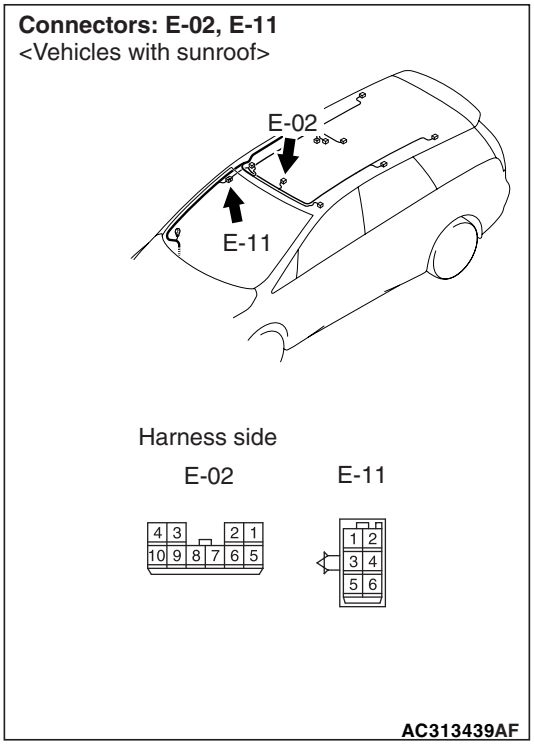


*NOTE: Prior to the wiring harness inspection, check intermediate connector E-11, and repair if necessary.*

- Check the earth wires for open circuit.

**Q: Is the check result normal?**

**YES :** The trouble can be an intermittent malfunction (Refer to GROUP 00 – How to Cope with Intermittent Malfunction P.00-5).

**NO :** Repair the wiring harness.

### Step 5. Connector check: C-221 ETACS-ECU connector

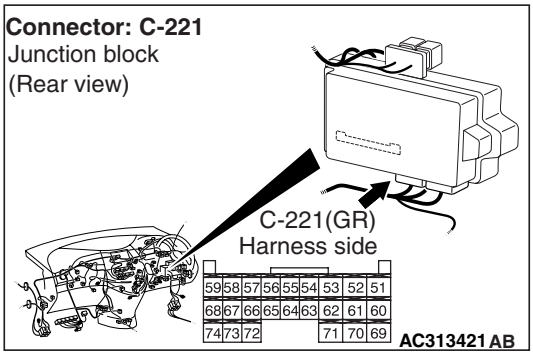


**Q: Is the check result normal?**

**YES :** Go to Step 6.

**NO :** Repair the defective connector.

### Step 6. Check the wiring harness from E-02 room lamp connector terminal Nos. 6 and 7 to C-221 ETACS-ECU connector terminal Nos. 53 and 63.

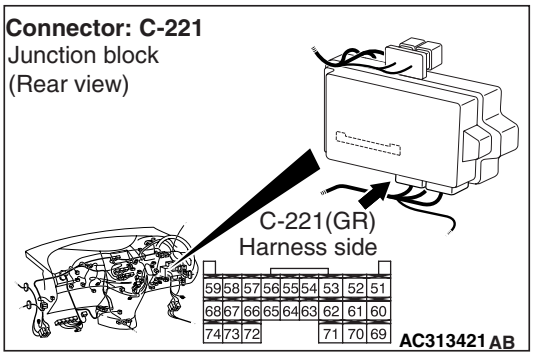


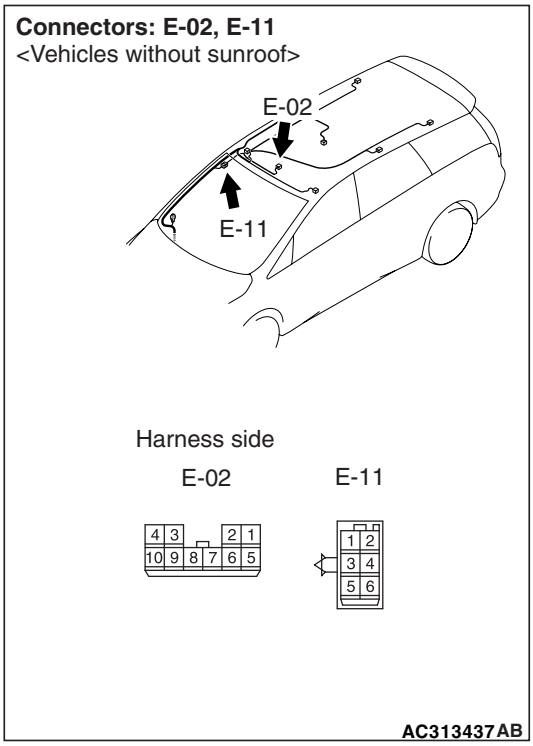

Main Index
Group TOC

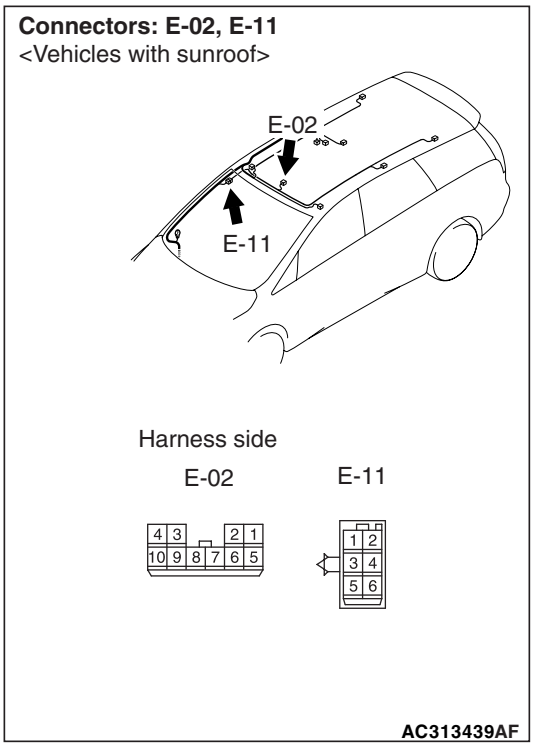


*NOTE:*

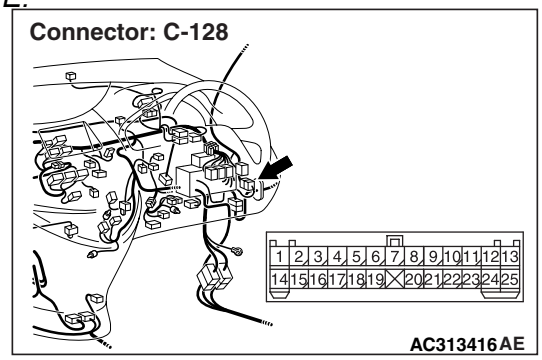


*Prior to the wiring harness inspection, check intermediate connector E-11 and C-128, and repair if necessary.*

- Check the input line for open circuit.

**Q: Is the check result normal?**

**YES :** Go to Step 7.

**NO :** Repair the wiring harness.

**Step 7. ETACS switch data by using the SWS monitor**

Check the input signal from the interior lamp switch.

- Interior lamp switch: from ON to OFF

| Item No. | Item name | Normal conditions |
|---|---|---|
| Item 31 | Room lamp ALL ON switch | from ON to OFF |
| Item 32 | Room lamp ALL OFF switch | from OFF to ON |

**OK: Normal condition is displayed.**

**Q: Is the check result normal?**

**YES :** The trouble can be an intermittent malfunction (Refer to GROUP 00 – How to Cope with Intermittent Malfunction P.00-5).

**NO :** Replace the ETACS-ECU.

Main Index
Group TOC

## INSPECTION PROCEDURE P-18: The hood switch signal is not received.

**⚠ CAUTION**
**Whenever the ECU is replaced, ensure that the input signal circuit is normal.**

**Hood Switch Input Circuit**

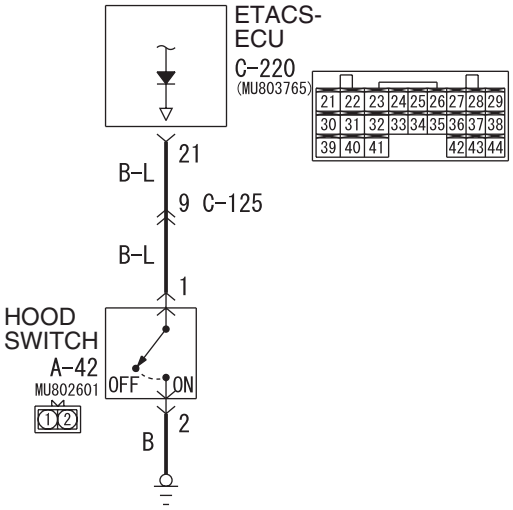


Wire colour code
B : Black LG : Light green G : Green L : Blue W : White Y : Yellow SB : Sky blue
BR : Brown O : Orange GR : Gray R : Red P : Pink V : Violet

W4X54X122A

## COMMENTS ON TROUBLE SYMPTOM

Input signal from the hood switch is used to operate the security alarm. If the signal is abnormal, the security alarm will not work.

## POSSIBLE CAUSES

- Malfunction of the hood switch
- Malfunction of the ETACS-ECU
- Damaged harness wires and connectors

## DIAGNOSIS PROCEDURE

### Step 1. Connector check: A-42 hood switch connector.

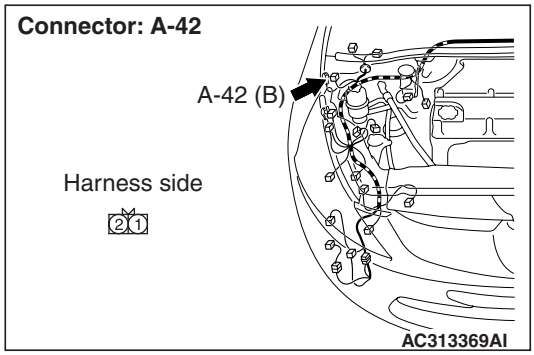


**Q: Is the check result normal?**
**YES :** Go to Step 2.
**NO :** Repair the defective connector.

### Step 2. Check the hood switch

Refer to GROUP 42 – Body P.42-8.

**Q: Is the check result normal?**
**YES :** Go to Step 3.
**NO :** Replace the hood switch.

Main Index
Group TOC

### Step 3. Resistance measurement at the A-42 hood switch connector.

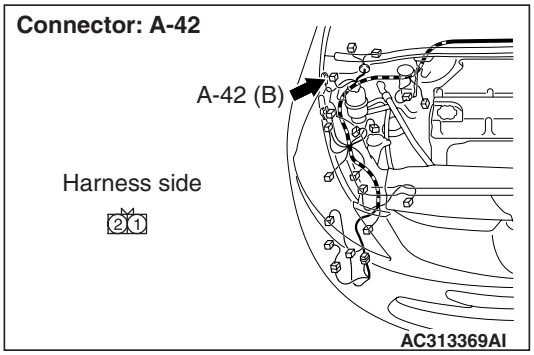


(1) Disconnect the connector, and measure at the wiring harness side.

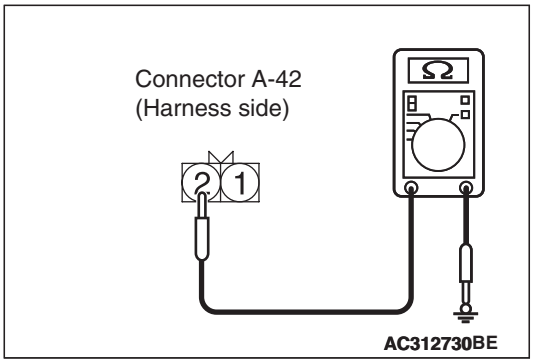


(2) Resistance between A-42 hood switch connector terminal No.2 and body earth

**OK: 2 Ω or less**

**Q: Is the check result normal?**

**YES :** Go to Step 5.

**NO :** Go to Step 4.

### Step 4. Check the wiring harness between A-42 hood switch connector terminal No.2 to body earth.

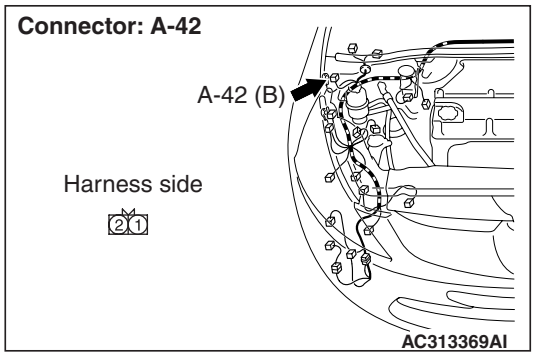


- Check the earth wires for open circuit.

**Q: Is the check result normal?**

**YES :** Intermittent malfunction (Refer to GROUP 00 – How to Cope with Intermittent Malfunction P.00-5).

**NO :** Repair the wiring harness.

### Step 5. Connector check: C-220 ETACS-ECU connector

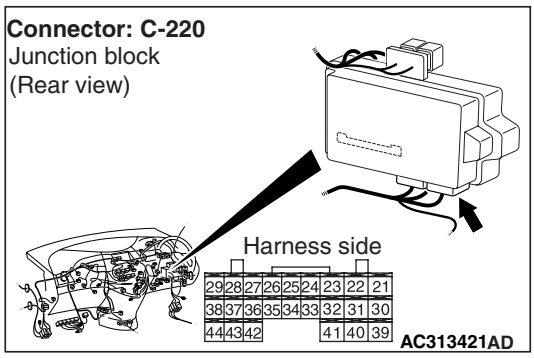


**Q: Is the check result normal?**

**YES :** Go to Step 6.

**NO :** Repair the defective connector.

Main Index
Group TOC

**Step 6. Check the wiring harness from A-42 hood switch terminal No.1 to C-220 ETACS-ECU connector terminal No.21.**

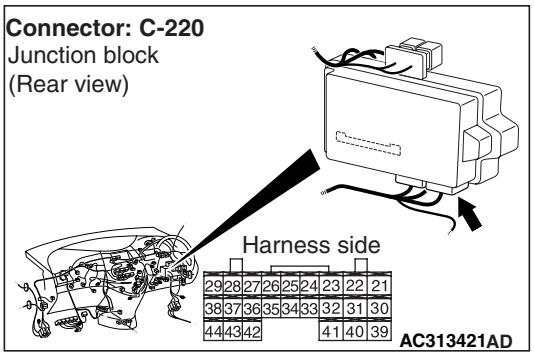


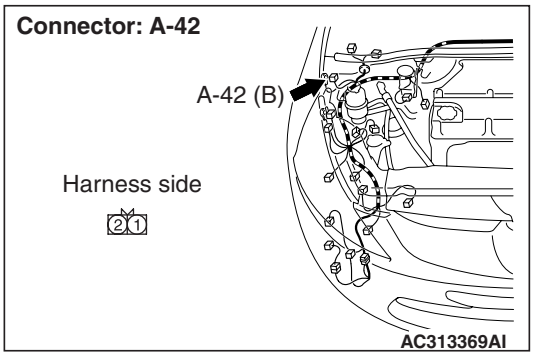


*NOTE:*

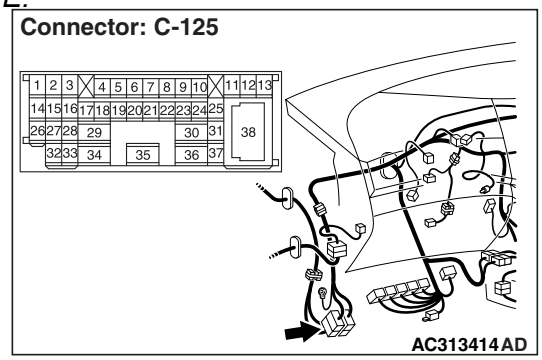


*Prior to the wiring harness inspection, check intermediate connector C-125, and repair if necessary.*

**Q: Is the check result normal?**

**YES : .** Go to Step 7.

**NO : .** Repair the wiring harness.

**Step 7. ETACS switch data by using the SWS monitor**

- Hood: Closed to open

| Item No. | Item name | Normal condition |
|---|---|---|
| Item 13 | Hood switch | from OFF to ON |

**OK: Normal condition is displayed.**

**Q: Is the check result normal?**

**YES :** The trouble can be an intermittent malfunction (Refer to GROUP 00 – How to Cope with Intermittent Malfunction P.00-5).

**NO :** Replace the ETACS-ECU.

Main Index
Group TOC

## INSPECTION PROCEDURE P-19: Each switch signal of the keyless entry transmitter is not received.

**⚠ CAUTION**
**Whenever the ECU is replaced, ensure that the input signal circuit is normal.**

**Transmitter Input Circuit**

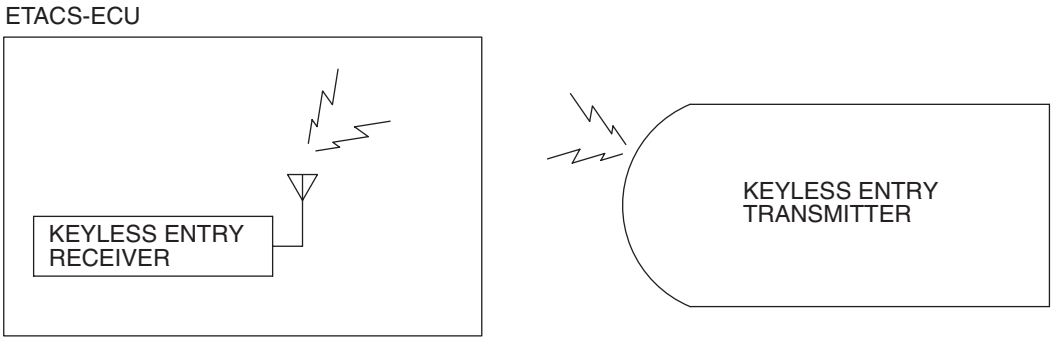


W3Z10E39AA

## COMMENTS ON TROUBLE SYMPTOM

Input signal from the keyless entry transmitter is used to operate the keyless entry system. If the signal is abnormal, the keyless entry system will not work normally.

- Keyless entry system
- Keyless entry hazard answerback
- Multimode keyless entry system

## POSSIBLE CAUSES

- Malfunction of the keyless entry transmitter
- Defective battery of the keyless entry transmitter
- Malfunction of the ETACS-ECU

## DIAGNOSIS PROCEDURE

**Step 1. Pulse check**

Check whether the ETACS-ECU receives signal from a transmitter or not. For this check, you should use the 2-button-type transmitter (integrated with a key), which cover screw is silver and has already been registered.

*NOTE: For how to register the keyless entry transmitter encrypted code, refer to GROUP 42 – On-vehicle Service P.42-65.*

| System switch | Check condition |
|---|---|
| Keyless entry transmitter "LOCK/UNLOCK" switch | When the switch is turned from off to on |

**OK: The M.U.T.-III sounds or the voltmeter needle fluctuates.**

**Q: Is the check result normal?**
**YES :** Go to Step 2.
**NO :** Go to Step 4.

**Step 2. Check the transmitter battery.**

Refer to GROUP 42 – Keyless entry system P.42-69.

**Q: Is the check result normal?**
**YES :** Go to Step 3.
**NO :** Replace the keyless entry transmitter battery.

**Step 3. Register the encrypted code, and then retest the system.**

(1) Register the keyless entry transmitter again.
(2) Check that each signal is received from the keyless entry transmitter.

**Q: Is the check result normal?**
**YES :** The trouble can be an intermittent malfunction (Refer to GROUP 00 – How to Cope with Intermittent Malfunction P.00-5).
**NO :** Replace the keyless entry transmitter.

**Step 4. Retest the system.**

Check that each signal is received from the keyless entry transmitter.

**Q: Is the check result normal?**
**YES :** The trouble can be an intermittent malfunction (Refer to GROUP 00 – How to Cope with Intermittent Malfunction P.00-5).
**NO :** Replace the ETACS-ECU.

Main Index
Group TOC

## INSPECTION PROCEDURE P-20: Interior lamp loaded signal is not detected.

**⚠ CAUTION**

**Whenever the ECU is replaced, ensure that the input signal circuit is normal.**

**Interior Lamp Automatic Shut-off Function Circuit**

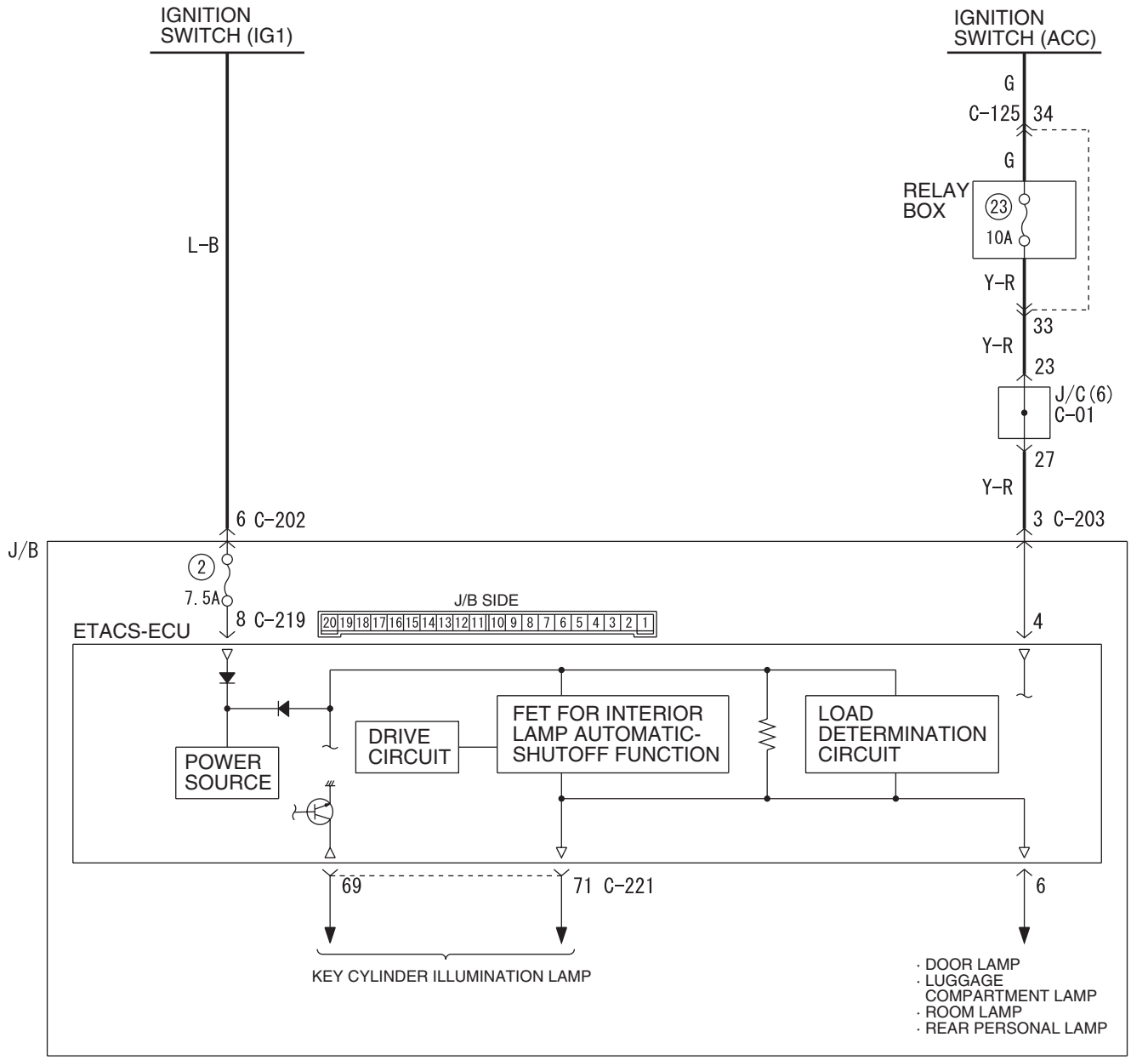


Wire colour code
B : Black LG : Light green G : Green L : Blue W : White Y : Yellow SB : Sky blue
BR : Brown O : Orange GR : Grey R : Red P : Pink V : Violet PU : Purple

W6X54X084A

## COMMENTS ON TROUBLE SYMPTOM

The interior lamp automatic-shutdown function operates in accordance with the interior lamp loaded signal. If this signal is abnormal, the functions below will not work normally.

- Interior lamps
- Interior lamp automatic-shutdown function

Main Index
Group TOC

## POSSIBLE CAUSES

- Malfunction of the ETACS-ECU
- Damaged wiring harness or connector(s)

## DIAGNOSIS PROCEDURE

**Step 1. ECU check by using the SWS monitor**

Check that the power supply and earth lines to the ETACS-ECU and the SWS communication lines are normal.

- Ignition switch: OFF

**ECUS TO BE CHECKED**

- ETACS ECU

**OK: "OK" is displayed on the "ETACS ECU" menu.**

**Q: Is the check result normal?**

**YES :** Go to Step 2.

**NO :** Refer to Inspection Procedure A-3 "Communication with the ETACS-ECU is not possible P.54E-55."

**Step 2. Connector check: C-219 ETACS-ECU connector**

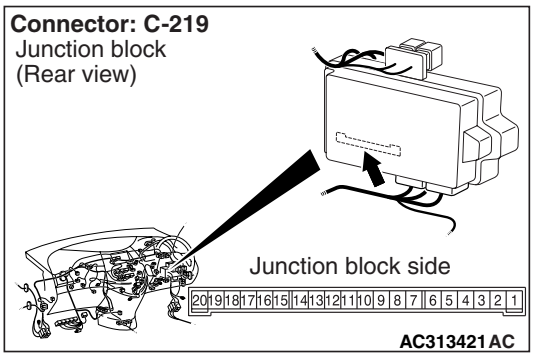


**Q: Is the check result normal?**

**YES :** Go to Step 3.

**NO :** Repair the defective connector.

**Step 3. Voltage measurement at the C-219 ETACS-ECU connector.**

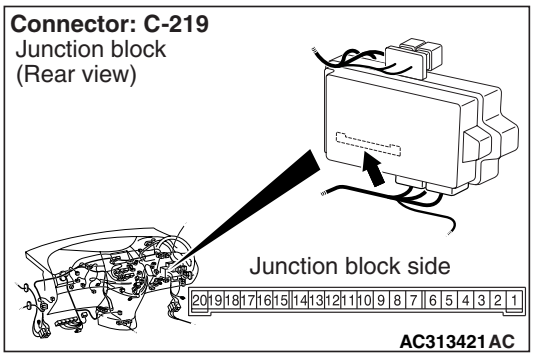


(1) Remove the ETACS-ECU, and measure at the junction block side.

(2) Turn the ignition switch to the ON position.

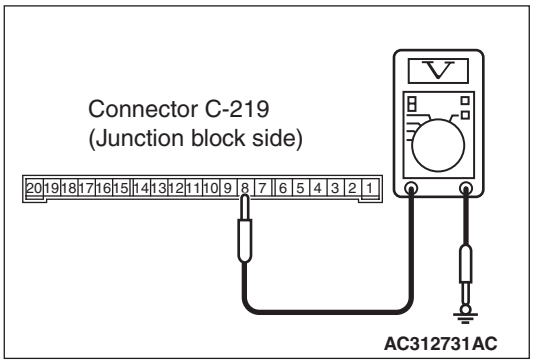


(3) Voltage between C-219 ETACS-ECU connector terminal No.8 and body earth

**OK: System voltage**

**Q: Is the check result normal?**

**YES :** Go to Step 5.

**NO :** Go to Step 4.

**Step 4. Check the wiring harness between C-219 ETACS-ECU connector terminal No.8 to the ignition switch (IG1).**

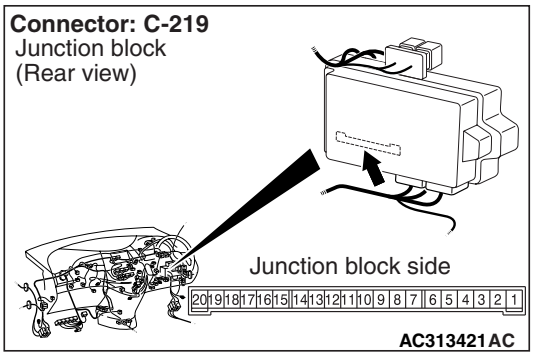


*NOTE:*

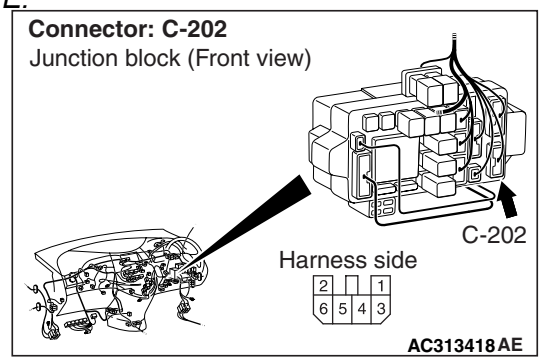


*Prior to the wiring harness inspection, check junction block connector C-202, and repair if necessary.*

- Check the power supply line to the ignition switch (IG1) for open circuit.

Main Index
Group TOC

**Q: Is the check result normal?**

**YES :** The trouble can be an intermittent malfunction (Refer to GROUP 00 – How to Cope with Intermittent Malfunction P.00-5).

**NO :** Repair the wiring harness.

## Step 5. Voltage measurement at the C-219 ETACS-ECU connector.

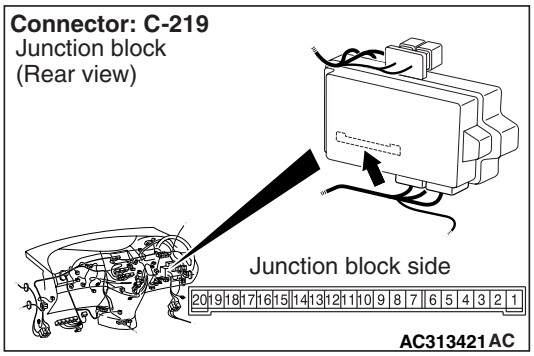


(1) Remove the ETACS-ECU, and measure at the junction block side.

(2) Turn the ignition switch to the ACC position.

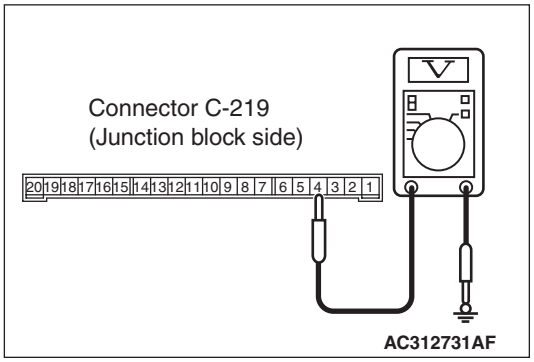


(3) Voltage between terminal 4 and body earth

**OK: System voltage**

**Q: Is the check result normal?**

**YES :** Go to Step 7.

**NO :** Go to Step 6.

## Step 6. Check the wiring harness between C-219 ETACS-ECU connector terminal No.4 to the ignition switch (ACC).

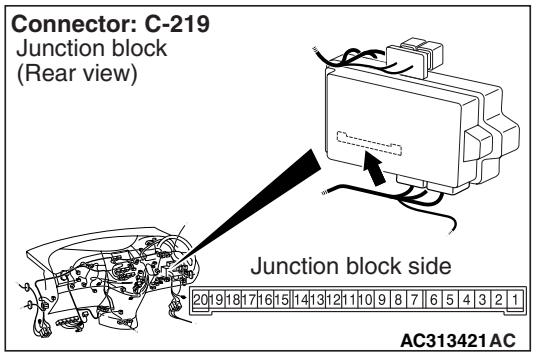


*NOTE:*

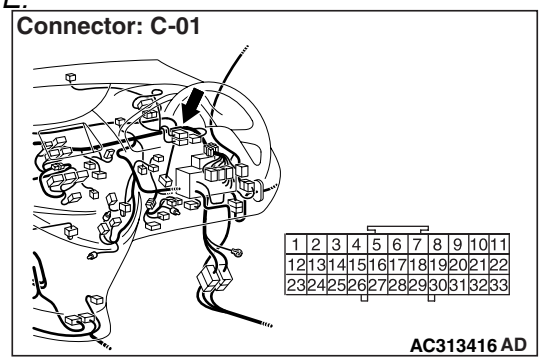


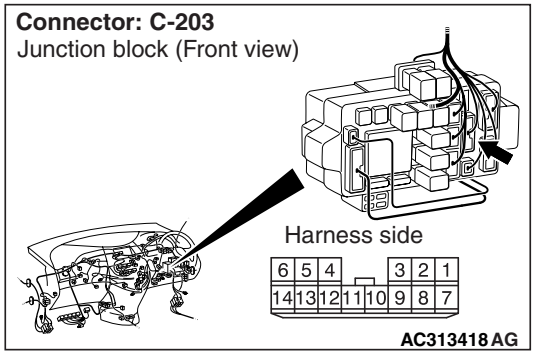


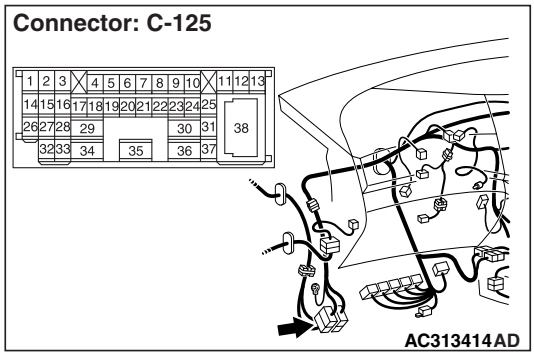


*Prior to the wiring harness inspection, check joint connector C-01 junction block connector C-203 or intermediate connector C-125, and repair if necessary.*

- Check the power supply line to the ignition switch (ACC) for open circuit.

Main Index
Group TOC

**Q: Is the check result normal?**
**YES :** The trouble can be an intermittent malfunction (Refer to GROUP 00 – How to Cope with Intermittent Malfunction P.00-5).
**NO :** Repair the wiring harness.

**Step 7. Pulse check**
Check the input of the interior lamp loaded signal.

| System switch | Check condition |
|---|---|
| Interior lamp loaded signal | When a load is applied through multi-purpose fuse No.18 |

**OK: The M.U.T.-III sounds or the voltmeter needle fluctuates.**

**Q: Is the check result normal?**
**YES :** The trouble can be an intermittent malfunction (Refer to GROUP 00 – How to Cope with Intermittent Malfunction P.00-5).
**NO :** Replace the ETACS-ECU.

## INSPECTION PROCEDURE P-21: The vehicle speed signal is not received.

**⚠ CAUTION**
**Whenever the ECU is replaced, ensure that the input signal circuit is normal.**

### COMMENTS ON TROUBLE SYMPTOM

The vehicle speed signal is used to operate the functions below. If the signal is abnormal, these functions will not work normally.

- Windshield wiper and washer (vehicle speed-dependent wiper function)
- Door ajar warning buzzer function
- Door ajar indicator lamp

### POSSIBLE CAUSES

- Malfunction of the vehicles speed sensor
- Malfunction of the ETACS-ECU
- Damaged harness wires and connectors

### DIAGNOSTIC PROCEDURE

**Step 1. M.U.T.-III CAN bus diagnostics**
Use the M.U.T.-III to diagnose the CAN bus lines.

**Q: Is the check result normal?**
**YES :** Go to Step 2.
**NO :** Repair the CAN bus line (Refer to GROUP 54F – Troubleshooting P.54F-13).

**Step 2. Check for combination meter diagnosis code.**
Check whether the combination meter-related diagnosis code is set.

**Q: Is the diagnosis code set?**
**YES :** Diagnose the combination meter (Refer to GROUP 54A – Combination meter P.54A-12).
**NO :** Go to Step 3.

**Step 3. ETACS ANALOG data by using the SWS monitor.**

- Enter a simulated vehicle speed.

| Item No. | Item name | Normal conditions |
|---|---|---|
| Item 3 | Vehicle speed | Displays the speed which fluctuates within ± 2 km/h from the entered vehicle speed. |

**OK: Normal condition is displayed.**

**Q: Is the check result normal?**
**YES :** The trouble can be an intermittent malfunction (Refer to GROUP 00 – How to Cope with Intermittent Malfunction P.00-5).
**NO :** Replace the ETACS-ECU.

Main Index
Group TOC

## INSPECTION PROCEDURE P-22: No photo sensor signal is received.

**⚠ CAUTION**

**Whenever the ECU is replaced, ensure that the input signal circuit is normal.**

**Photo Sensor Input Circuit**

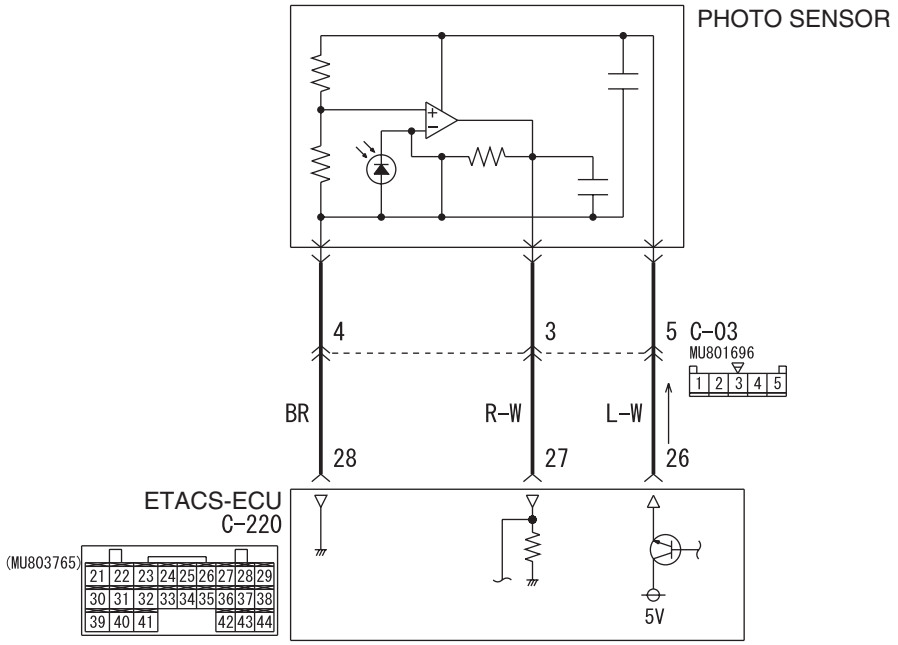


Wire colour code
B : Black LG : Light green G : Green L : Blue W : White Y : Yellow SB : Sky blue
BR : Brown O : Orange GR : Grey R : Red P : Pink V : Violet PU : Purple

W4X54X186A

## COMMENTS ON TROUBLE SYMPTOM

Input signal from the photo sensor is used to operate the auto lamp function. If the signal is abnormal, the auto lamp function will not work normally.

## POSSIBLE CAUSES

- Malfunction of photo sensor
- Malfunction of the ETACS-ECU
- Damaged harness wires and connectors

Main Index
Group TOC

## DIAGNOSIS PROCEDURE

**Step 1. Connector check: C-03 photo sensor connector and C-220 ETACS-ECU connector.**

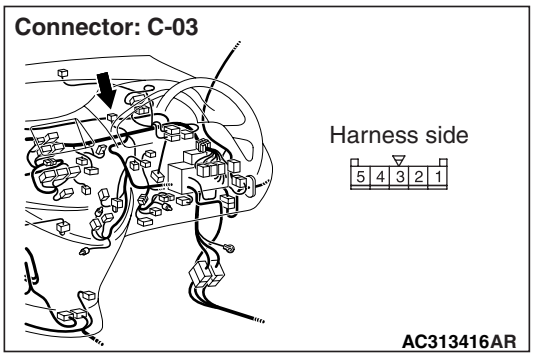


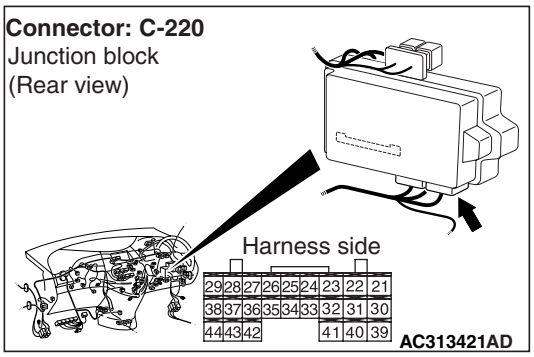


**Q: Is the check result normal?**
**YES :** Go to Step 2.
**NO :** Repair the defective connector.

**Step 2. Check the wiring harness from C-03 photo sensor connector terminal No.3, 4, 5 to C-220 ETACS-ECU connector terminal No.27, 28, 26.**

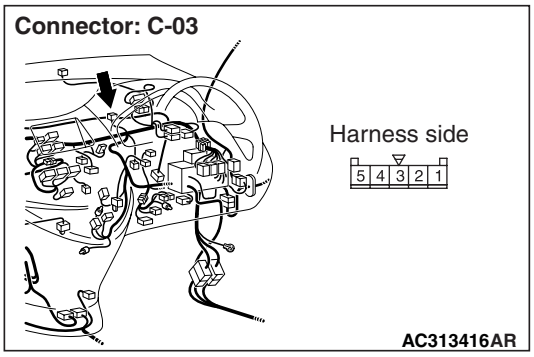


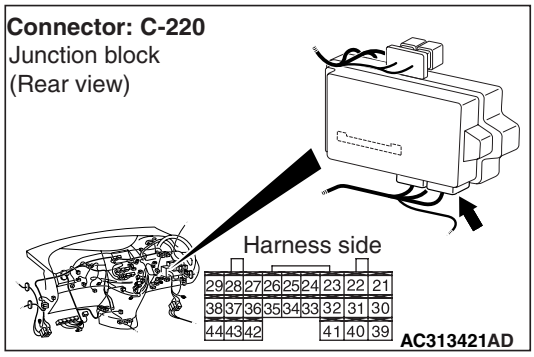


- Check the sensor line for open circuit.

**Q: Is the check result normal?**
**YES :** Go to Step 3.
**NO :** Repair the wiring harness.

**Step 3. ETACS ANALOG data by using the SWS monitor.**

- Vary the illumination intensity of the photo sensor.

| Item No. | Item name | Normal condition |
|---|---|---|
| Item 1 | Photo sensor voltage | The voltage changes within a range of 0.68 to 3.8 V. |

**OK: Normal condition is displayed.**

**Q: Is the check result normal?**
**YES :** The trouble can be an intermittent malfunction (Refer to GROUP 00 – How to Cope with Intermittent Malfunction P.00-5).
**NO :** Go to Step 4.

**Step 4. Replacing the photo sensor**

(1) Replace the photo sensor (Refer to Group 55 – Photo sensor and interior temperature sensor P.55-225).
(2) Check that the signals from the photo sensor are received.

**Q: Is the check result normal?**
**YES :** The trouble can be an intermittent malfunction (Refer to GROUP 00 – How to Cope with Intermittent Malfunction P.00-5).
**NO :** Replace the ETACS-ECU.

Main Index
Group TOC

# CHECK AT ECU TERMINAL

M1549001200890

## ETACS-ECU

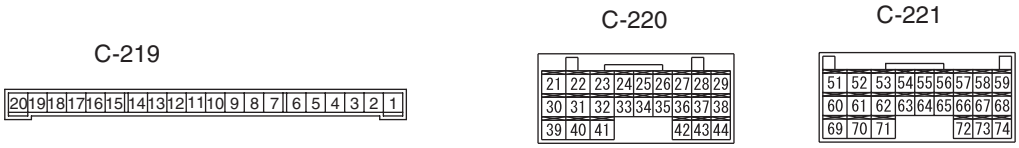


AC312902 AB

*NOTE: Terminal numbers 1 to 20 can not be measured as the ETACS-ECU is mounted on the junction block directly. The values are for reference only.*

| Terminal No. | Check item | Check condition | Normal condition |
|---|---|---|---|
| 1 | Output to the power window relay | When the power windows are operative | System voltage |
| 2 | Power supply to the central door locking system (battery positive voltage) | Always | System voltage |
| 3 | Earth (for ECU) | Always | 0 V |
| 4 | Ignition switch (ACC) | Ignition switch: ACC | System voltage |
| 5 | Output to room lamp | When the room lamp is on | 2 V or less |
| 6 | Power supply to interior lamp (battery positive voltage) | Always (when the interior lamp off function is off) | System voltage |
| 7 | Input from all the door switches | One of the door switches: ON (door open) | 0 V |
| 8 | Power supply from ignition switch (IG1) | Ignition switch: ON | System voltage |
| 9 | Output to right turn-signal lamps | When right turn-signal lamps are on | System voltage |
| 10 | Input from driver's door switch | Driver's door switch: ON (door open) | 0 V |
| 11 | Power supply to hazard warning lamp (battery positive voltage) | Always | System voltage |
| 12 | Output to central door locking (for locking the doors) | When the door lock actuators lock the doors | System voltage |
| 13 | Output to central door locking (for unlocking the doors other than the driver's door) | When the door lock actuators unlock the doors | System voltage |
| 14 | Output to left turn-signal lamps | When the left turn-signal lamps are on | System voltage |
| 15 | – | – | – |
| 16 | Output to rear wiper | When rear wiper is operating | System voltage |
| 17 | Input of rear wiper automatic stop signal | When rear wiper is operating | System voltage |
| 18 | Power supply from ignition switch (ACC) | Ignition switch: ACC | System voltage |

Main Index
Group TOC

| Terminal No. | Check item | Check condition | Normal condition |
|---|---|---|---|
| 19 | – | – | – |
| 20 | Battery power supply (for ECU) | Always | System voltage |
| 21 | Input from hood switch | Hood switch ON (hood open) | 0 V |
| 22 | Output to central door locking (for unlocking the driver's door) | When the door lock actuators unlock the doors | System voltage |
| 23 | Rear washer output | When rear washer is operating | System voltage |
| 24 | Input from remote controlled mirror switch (fold switch) | Remote controlled mirror switch (fold switch): ON | 0 V |
| 25 | – | – | – |
| 26 | Photo sensor (auto lamp) power supply | Ignition switch: ON | 5 V |
| 27 | Photo sensor (auto lamp) input | Ignition switch: ON<br>Sensor probe illumination intensity: Dark to Bright | 0 to approximately 4 V |
| 28 | Photo sensor (auto lamp) earth | Always | 0 V |
| 29 | – | – | – |
| 30 | Input to key reminder switch | Key reminder switch: ON (ignition key removed) | 0 V |
| 31 | Output to electric retractable remote controlled mirror (unfold) | When the door mirrors are folding | System voltage |
| 32 | – | – | – |
| 33 | Central door lock switch input | Central door lock switch: Locked | 0 V |
| 34 | Input from central door unlock switch | Central door unlock switch: Unlocked | 0 V |
| 35 | Input to driver's door lock actuator (lock switch) | Driver's door lock: Locked | 0 V |
| 36 | Input to driver's door lock actuator (unlock switch) | Driver's door lock: Unlocked | 0 V |
| 37~39 | – | – | – |
| 40 | Output to electric retractable remote controlled mirror (unfold) | When the door mirrors are unfolding | System voltage |
| 41~43 | – | – | – |
| 44 | Output to horn | When alarm is triggered (horn is sounding) | 0 V |
| 51 | Setting diagnosis code or sending input check signal | When diagnosis code is set (the M.U.T.-II/III is connected or the diagnosis connector No.1 is earthed) | 0 to 12 V (pulse signal) |
| | | When input check signal is sent | 0 V, 12 V (input signal is fluctuating) |
| 52 | Input from luggage room lamp switch | Luggage room lamp switch: ON | 0 V |

Main Index
Group TOC

| Terminal No. | Check item | Check condition | Normal condition |
|---|---|---|---|
| 53 | Input from interior lamp off switch | Interior lamp switch: OFF | 0 V |
| 54 | Input from front fog lamp switch | Front fog lamp switch: ON | 0 V |
| 55 | Input from hazard warning lamp switch | Hazard warning lamp switch: ON | 0 V |
| 56 | Earth (for sensor) | Always | 0 V |
| 57, 58 | – | – | – |
| 59 | SWS communication line | Always | 0 to 12 V (pulse signal) |
| 60, 61 | – | – | – |
| 62 | Input to tailgate lock release handle | Tailgate lock release handle: ON | 0 V |
| 63 | Input from interior lamp on switch | Interior lamp switch: ON | 0 V |
| 64, 65 | – | – | – |
| 66 | Input from windshield intermittent wiper volume | Turn the ignition switch to the ACC position, and move the wiper volume from "Fast" to "Slow." | 0 to 2.5 V |
| 67 | Input from diagnosis control | When M.U.T.-III is connected | 0 V |
| 68 | Input of SWS request signal | Always | 0 to 12 V (pulse signal) |
| 69 | Output to ignition key cylinder illumination lamp | When ignition key cylinder illumination is on | 2 V or less |
| 70 | – | – | – |
| 71 | Power supply to interior lamp | Always (when the interior lamp off function is off) | System voltage |
| 72, 73 | – | – | – |
| 74 | Output to security indicator lamp | When security indicator lamp is on | 2 V or less |

Main Index
Group TOC

## COLUMN SWITCH

C-310

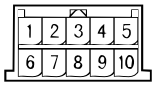


AC005555AF

| Terminal No. | Check item | Check condition | Normal condition |
|---|---|---|---|
| 1 | System voltage | Always | System voltage |
| 2 | Input of SWS request signal | Always | 0 to 12 V (pulse signal) |
| 3 | SWS communication line | Always | 0 to 12 V (pulse signal) |
| 4 | Earth | Always | 0 V |
| 5 | – | – | – |
| 6 | Output to windshield intermittent wiper volume | Ignition switch: ACC<br>Move the wiper volume from "Fast" to "Slow." | 0 to 2.5 V |
| 7 | – | – | – |
| 8 | Back-up output to windshield wiper switch | Windshield low-speed wiper switch or windshield high-speed wiper switch: ON | 0 V |
| 9 | Power supply from ignition switch (IG1) | Ignition switch: ON | System voltage |
| 10 | Back-up output to headlamp switch | Headlamp switch: ON | 0 V |

Main Index
Group TOC

## FRONT-ECU

*NOTE: Measurement is not possible as the front-ECU is mounted on the relay box directly. The values are for reference only.*

| Terminal No. | Check item | Check condition | Normal condition |
|---|---|---|---|
| 1 | Output to front fog lamps | When front fog lamps are on | System voltage |
| 2 | Output to high-beam headlamps | When high-beam headlamps are on | System voltage |
| 3, 4 | Battery power supply (for headlamps) | Always | System voltage |
| 5 | Battery power supply (for tail lamps) | Always | Battery voltage |
| 6 | Output to low-beam headlamps | When low-beam headlamps are on | Battery voltage |
| 7 | Battery power supply (for ECU) | Always | System voltage |
| 8 | Output to tail lamps | When the tail lamps are on | System voltage |
| 9~11 | – | – | – |
| 21 | Output to windshield washer | When windshield washer is operating | System voltage |
| 22 | SWS communication line | Always | 0 to 12 V (pulse signal) |
| 23 | Input of windshield wiper automatic stop signal | When windshield wipers are operating | System voltage |
| 24 | Power supply from ignition switch (ACC) | Ignition switch: ACC | System voltage |
| 25 | Back-up input from headlamp switch | Headlamp switch: ON | 0 V |
| 26 | Back-up input from windshield wiper switch | Windshield low-speed wiper switch or windshield high-speed wiper switch: ON | 0 V |
| 27 | Output to windshield wiper (low speed operation) | When windshield wipers are operating at low speed | System voltage |
| 28 | Output to windshield wiper (high speed operation) | When windshield wipers are operating at high speed | System voltage |
| 29 | – | – | – |
| 30 | Power supply to the ignition switch (IG2) | Ignition switch: ON | System voltage |
| 31 | Earth | Always | 0 V |

Main Index
Group TOC

## POWER WINDOW MAIN SWITCH

F-05

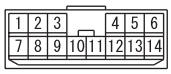


AC312905 AB

| Terminal No. | Check item | Check condition | Normal condition |
|---|---|---|---|
| 1 | Output to power window motor | – | – |
| 2 | Earth | Always | 0 V |
| 3 | – | – | – |
| 4 | SWS communication line (to ETACS-ECU) | Always | 0 to 12 V (pulse signal) |
| 5 | – | – | – |
| 6 | Power supply | Power window relay: ON | System voltage |
| 7 | Output to power window motor | – | – |
| 8 | Input from power window motor (pulse sensor earth) | – | 0 V |
| 9 | Input from power window motor (pulse sensor signal) | When the power windows are operating | 0 to 5 V (pulse signal) |
| 10 | Input from power window motor (pulse sensor signal) | When the power windows are operating | 0 to 5 V (pulse signal) |
| 11 | SWS communication line (power window sub switch) | Power window relay: ON | 0 to 12 V (pulse signal) |
| 12 | Input from power window motor (power supply to pulse sensor) | When the power windows are operating | 5 V |
| 13, 14 | – | – | – |

Main Index
Group TOC

## POWER WINDOW SUB SWITCH

F-15 (front: RH), F-02 (rear: LH), F-18 (rear: RH) <LHD>
F-26 (front: LH), F-02 (rear: LH), F-18 (rear: RH) <RHD>

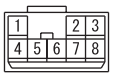


AC312906 AB

| Terminal No. | Check item | Check condition | Normal condition |
|---|---|---|---|
| 1 | Earth | Always | 0 V |
| 2 | Input from power window motor | – | – |
| 3 | Input from power window motor | – | – |
| 4 | Power supply | Power window relay: ON | System voltage |
| 5 | Output to power window motor | – | – |
| 6 | SWS communication line | Power window relay: ON | 0 to 12 V (pulse signal) |
| 7 | Output to power window motor | – | – |
| 8 | Input from power window motor | – | – |

## SUNROOF MOTOR ASSEMBLY

E-07

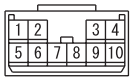


AC312932AB

| Terminal No. | Check item | Check condition | Normal condition |
|---|---|---|---|
| 1 | System voltage (for motor) | Always | System voltage |
| 2 | Power supply from ignition switch (IG2) | Ignition switch: ON | System voltage |
| 3, 4 | – | – | – |
| 5 | Earth | Always | 0 V |
| 6 | Input from sunroof switch (close) | Sunroof switch: Close | 0 V |
| 7 | – | – | – |
| 8 | Input from sunroof switch (open) | Sunroof switch: Open | 0 V |
| 9 | – | – | – |
| 10 | SWS communication line (to ETACS-ECU) | Always | 0 to 12 V (pulse signal) |

Main Index
Group TOC

# ON-VEHICLE SERVICE

## CUSTOMISE FUNCTION

M1549002501217

Using M.U.T.-III adjusts the following function. The programmed information is held even when the battery is disconnected.

- Auto lamp function sensor sensitivity (illumination intensity)

When the lighting switch is in the AUTO position, the position lamp and headlamp illuminate automatically depending on the ambient brightness level.

- Headlamp automatic-shutdown function

To prevent the headlamp from being left illuminated, the headlamp is turned off automatically when opening the driver's door, if the ignition switch is turned to the LOCK (OFF) position with the lighting switch in the TAIL or HEAD position.

- Vehicle speed-dependent wiper function

With the windshield wiper switch in the intermittent position, the intermittent duration changes depending on the intermittent adjusting knob position and the vehicle speed.

- Electric folding door mirror automatic unfolding function

Driving with the door mirror retracted resets the door mirror automatically. The door mirrors can be folded and unfolded using another method.

- Horn answer back function of the keyless entry system

When lock/unlock is operated with the keyless entry transmitter, the horn sounds so that the driver can recognize the lock/unlock status of the vehicle even if the driver is away from it.

- Power window operation in multimode keyless entry system

From near by vehicle, the driver can actuate power window by operating the keyless entry transmitter.

- Security alarm

Operative/inoperative state of the security alarm function is selected.

- The selector "P" position-linked central door unlocking function

When the selector lever is shifted to the "P" position, all the doors unlock.

- Turn-signal lamp operation sound function

Synchronized with the hazard lamp and the turn signal lamp, the buzzer sounds.

- Dimmer interior lamp control duration

When the door is closed with the ignition switch LOCK (OFF), the interior lamp is turned OFF automatically in the specified time.

- Power window timer function duration

Even after turning LOCK (OFF) the ignition switch, the power window can be operated for the specified time.

- Power window main switch operation control during power window timer activation

During power window timer activation, only the driver's power window can be operated, using the power window main switch.

- Timer lock time after executing the keyless entry unlock

If any door including a tailgate is not opened after being unlocked with the keyless transmitter, doors are locked automatically within the specified time.

- Door-ajar warning function

Driving with any door, including a tailgate, not properly closed sounds the buzzer to let the driver know the door-ajar state.

- Wiper-linked auto lamp function

If the lighting switch is set to AUTO, the headlamps illuminate irrelevant of the ambient brightness when the wiper is operated.

- Rear wiper intermittent duration

When the rear wiper switch is turned ON, the rear wiper operates in the intermittent action. When the rear wiper switch is turned from OFF to ON two cycles, the rear wiper makes continuous operation regardless of the intermittent operation duration setting.

- Operation duration of interior lamp automatic-shutdown function

This function automatically turns OFF the interior lamp after a specified time has elapsed, if the interior lamp is ON with the ignition switch in the LOCK (OFF) position.

- Power window lock operation on the driver's seat

This function enables the driver to control the power windows other than the driver's door power window with the power window main switch, when the power window lock switch incorporated in the power window main switch is pressed.

- Wiper linked with washer function

When this function is active, the windshield wiper operates if the washer switch is turned ON.

- Hazard answer back function of the keyless entry system

When lock/unlock is operated with the keyless entry transmitter, the horn sounds so that the driver can recognize the lock/unlock status of the vehicle even if the driver is away from it.

- Initialising all functions (Returning to the initial condition)

All adjusting functions are returned to the settings at the time of factory shipment.

Main Index
Group TOC

| Item No. | Items shown on M.U.T.-III screen | Item | Adjustment items shown on M.U.T.-III screen | Adjusting contents |
|---|---|---|---|---|
| 1 | Sensitivity for auto-lamp | Auto lamp function sensor sensitivity (illumination intensity) | Sensitive | High ambient brightness |
| | | | Normal | Standard ambient brightness (initial setting) |
| | | | Insensitive | Low ambient brightness |
| | | | More insensitive | Low-low ambient brightness |
| 2 | Headlamp auto-cut | Headlamp automatic-shutdown function | Spec.A(Old) | With function: The automatic tail lamp turn-off function with the ignition switch OFF (LOCK) is available. |
| | | | Spec.D(DOM) | With function: The automatic tail lamp turn-off function with the ignition switch OFF (LOCK) is not available. (Initial setting) |
| | | | Without function | Without function |
| 4 | Wiper speed-sensitive operation | Vehicle speed-dependent wiper function | With function | With function (Initial setting) |
| | | | Without function | Without function |
| 5 | Door mirror automatic operation | Electric folding door mirror automatic unfolding function | Speed sensitive | Vehicle speed sensing reset (the initial condition) |
| | | | IG related | Ignition linked |
| | | | Keyless related | Keyless entry linked |
| | | | Without function | Without function |
| 6* | Keyless entry horn answer-back | Keyless entry horn answer-back | When locking | Sounds whenever locked |
| | | | When lock twice | Sounds in two consecutive lock operations (within 1 second). |
| | | | Without function | Without function (initial setting) |
| 8* | Prohibit keyless(horn) at night | Keyless entry horn answer-back disabled at night | Normal operation | Activated according to customisation of the keyless entry horn answer back (initial setting) |
| | | | Prohib. A.LP OFF | The keyless entry horn answer back basically operates according to the customised settings when the auto lamp switch is ON. At night, however, the horn answer back is disabled.<br>When the auto lamp switch is OFF, the horn answer back is disabled. |
| 10 | Keyless entry related P/W | Keyless entry power window operation | Open/Close | With function of close and open actions (the open action is for the power window only.) |
| | | | Close only | With function the close action only (the initial condition) |
| | | | Without function | Without activation |

Main Index
Group TOC

| Item No. | Items shown on M.U.T.-III screen | Item | Adjustment items shown on M.U.T.-III screen | Adjusting contents |
|---|---|---|---|---|
| 11 | Security alarm function | Security alarm | Horn/Hazard | With function: hazard and horn |
| | | | Without function | Without function (driver can configure setting): Driver can change the setting in order of "HORN/HAZARD," "W/O FUNCTION." |
| 14 | Door unlock ope. synch P range | Door unlock function linked with "P" position shift for centre door lock system | With function | With function |
| | | | Synch PW Lock SW | Power window lock switch OFF, with function |
| | | | Without function | Without function (the initial condition) |
| 15 | Turn-signal buzzer | Turn-signal lamp operation sound function | With function | With function |
| | | | Without function | Without function (the initial condition) |
| 16 | Room lamp delay timer | Dimmer interior lamp control duration | 30sec. | 30 seconds |
| | | | 15sec. | 15 seconds (the initial condition) |
| | | | 7.5sec. | 7.5 seconds |
| | | | Without function | 0 second (no delay action) |
| 18 | P/W key off timer | Power window (sunroof) timer function | Without function | Without the timer function |
| | | | 30sec. | 30 seconds (the initial condition) |
| | | | 3min. | 3 minutes |
| | | | 10min. | 10 minutes |
| 19 | P/W ope. during key off timer | Main switch operation rules during power window key off timer activation | Normal operation | All power windows can be operated using power window main switch during key-off timer activation. (initial setting) |
| | | | Prohibit main SW | Operation of all power windows except driver's window using power window main switch is prohibited during key-off timer activation. |
| 24 | Timer relock after unlocking | Timer lock time after executing the keyless entry unlock | 30sec. | 30 seconds (the initial condition) |
| | | | 60sec. | 1 minute |
| | | | 120sec. | 2 minutes |
| | | | 180sec. | 3 minutes |
| 26 | Door ajar buzzer | Door-ajar warning function | With function | With function (Initial setting) |
| | | | Without function | Without function |
| | | | Sequential ope. | Continuous operation |
| 27 | Headlamp synchronized wiper | Wiper-linked auto lamp function | Without function | Without function (the initial condition) |
| | | | With function | With function |

Main Index
Group TOC

| Item No. | Items shown on M.U.T.-III screen | Item | Adjustment items shown on M.U.T.-III screen | Adjusting contents |
|---|---|---|---|---|
| 28 | Rear wiper intermittent time | Rear wiper intermittent duration | 8sec. | 8 seconds: Without continuous operation (Initial setting) |
| | | | 4s(Sequential) | 4 seconds: With continuous operation |
| | | | 8s(Sequential) | 8 seconds: With continuous operation |
| | | | 16s(Sequential) | 16 seconds: With continuous operation |
| | | | Sequential ope. | Continuous operation (without the intermittence) |
| | | | 4sec. | 4 seconds: Without continuous operation |
| | | | 16sec. | 16 seconds: Without continuous operation |
| 30 | Room lamp auto-cut | Operation duration of interior lamp automatic-shutdown function | 3min. | 3 minutes |
| | | | 30min. | 30 minutes (the initial condition) |
| | | | 60min. | 60 minutes |
| | | | Without function | Without function |
| 31 | P/W lock-mode operation | Power window lock operation on the driver's seat | All SW operation | Driver can operate power windows on all doors even when the power window lock is ON (Initial setting). |
| | | | Only main SW | Operating seats other than the driver's seat is prohibited when lock is ON. |
| 37 | Wiper synchronized washer | Wiper linked with washer function | With function | With function (Initial setting) |
| | | | Without function | Without function |
| 39 | Turn-signal operation | Turn signal lamp operation condition adjustment function | When IG ON | Turn signal lamp can be operated when the ignition switch is turned ON (Initial setting). |
| | | | When IG ACC | Turn signal lamp can be operated when the ignition switch 1 is in ACC or ON position. |

Main Index
Group TOC

| Item No. | Items shown on M.U.T.-III screen | Item | Adjustment items shown on M.U.T.-III screen | Adjusting contents |
|---|---|---|---|---|
| 40 | Hazard answer-back operation | Keyless entry hazard answer-back flashing pattern adjustment function | LOCK:1/UNLOCK:2 | LOCK: Flash once, UNLOCK: Flash twice (Initial setting) |
| | | | LOCK:1/UNLOCK:0 | LOCK: Flash once, UNLOCK: No flash |
| | | | LOCK:0/UNLOCK:2 | LOCK: No flash, UNLOCK: Flash twice |
| | | | LOCK:2/UNLOCK:1 | LOCK: Flash twice, UNLOCK: Flash once |
| | | | LOCK:2/UNLOCK:0 | LOCK: Flash twice, UNLOCK: No flash |
| | | | LOCK:0/UNLOCK:1 | LOCK: No flash, UNLOCK: Flash once |
| | | | Without function | No flashing |

*NOTE: * can be adjusted only when the optional headlamp manner switch is installed. After the headlamp manner switch is installed and operated once, the customisation menu is available. If all the functions have been initialised, the related adjustment items will also be cleared. In this case, however, these items can be displayed again on the screen by turning on the headlamp manner switch.*