GROUP 55

HEATER, AIR CONDITIONER AND VENTILATION

CONTENTS

GENERAL INFORMATION 55-3

SERVICE SPECIFICATIONS. 55-4

LUBRICANTS 55-4

SPECIAL TOOL 55-5

SERVICE PRECAUTIONS. 55-7

CAUTION LABEL 55-7

TROUBLESHOOTING 55-8

DIAGNOSIS TROUBLESHOOTING FLOW 55-8

DIAGNOSIS FUNCTION. 55-8

DIAGNOSIS CODE CHART 55-8

DIAGNOSTIC TROUBLE CODE PROCEDURES. 55-10

TROUBLE SYMPTOM CHART. 55-47

SYMPTOM PROCEDURES 55-49

SERVICE DATA REFERENCE TABLE. . . . 55-198

ACTUATOR TEST TABLE 55-201

CHECK AT A/C-ECU TERMINALS 55-202

ON-VEHICLE SERVICE 55-206

COMPRESSOR DRIVE BELT A DJUSTMENT. 55-206

CHARGING AND DISCHARGING 55-206

CHECK THE REFRIGERANT LEVEL. 55-206

PERFORMANCE TEST 55-206

SIMPLE INSPECTION OF THE A/C PRESSURE SENSOR. 55-208

RELAY CONTINUITY CHECK 55-208

IDLE-UP OPERATION CHECK. 55-211

CLEAN AIR FILTER REPLACEMENT PROCEDURE 55-211

Continued on next page

WARNINGS REGARDING SERVICING OF SUPPLEMENTAL RESTRAINT SYSTEM (SRS) EQUIPPED VEHICLES

⚠ WARNING

(1) Improper service or maintenance of any component of the SRS, or any SRS-related component, can lead to personal injury or death to service personnel (from inadvertent firing of the air bag) or to the driver (from rendering the SRS inoperative).

(2) Service or maintenance of any SRS component or SRS-related component must be performed only at an authorized MITSUBISHI dealer.

(3) MITSUBISHI dealer personnel must thoroughly review this manual, and especially its GROUP 52B - Supplemental Restraint System (SRS) before beginning any service or maintenance of any component of the SRS or any SRS-related component.

NOTE

The SRS includes the following components: front impact sensors, SRS-ECU, SRS warning lamp, air bag module, clock spring and interconnecting wiring. Other SRS-related components (that may have to be removed/installed in connection with SRS service or maintenance) are indicated in the table of contents by an asterisk (*).

Main Index
Group TOC

HEATER CONTROL UNIT 55-212
REMOVAL AND INSTALLATION 55-212
INSPECTION 55-212

HEATER UNIT AND BLOWER ASSEMBLY* 55-213
REMOVAL AND INSTALLATION 55-213
DISASSEMBLY AND REASSEMBLY 55-217
HEATER UNIT DISASSEMBLY AND REASSEMBLY 55-218
BLOWER ASSEMBLY DISASSEMBLY AND REASSEMBLY 55-219
INSPECTION 55-220

MODE SELECTION DAMPER CONTROL MOTOR, AIR MIXING DAMPER CONTROL MOTOR, OUTSIDE/INSIDE AIR SELECTION DAMPER CONTROL MOTOR, POWER TRANSISTOR AND BLOWER MOTOR 55-221
REMOVAL AND INSTALLATION 55-221
INSPECTION 55-223

PHOTO SENSOR AND INTERIOR TEMPERATURE SENSOR 55-225
REMOVAL AND INSTALLATION 55-225
INSPECTION 55-226

AMBIENT TEMPERATURE SENSOR. 55-226
REMOVAL AND INSTALLATION 55-226
INSPECTION 55-226

HEAT SWITCH. 55-227
REMOVAL AND INSTALLATION <VEHICLES WITH REAR HEATER OR REAR A/C VEHICLES> 55-227
INSPECTION 55-227

REAR A/C SWITCH 55-228
REMOVAL AND INSTALLATION 55-228
INSPECTION 55-229

REAR HEATER UNIT 55-230
REMOVAL AND INSTALLATION 55-230
DISASSEMBLY AND REASSEMBLY <VEHICLES WITH REAR HEATER, REAR COOLER OR DUAL AUTOMATIC A/C> . . . 55-231
INSPECTION. 55-232

REAR BLOWER MOTOR AND REAR POWER TRANSISTOR 55-233
REMOVAL AND INSTALLATION 55-233
INSPECTION. 55-234

COMPRESSOR ASSEMBLY 55-235
REMOVAL AND INSTALLATION 55-235
INSPECTION. 55-237
DISASSEMBLY AND REASSEMBLY 55-238
INSPECTION. 55-240

CONDENSER ASSEMBLY. 55-241
REMOVAL AND INSTALLATION 55-241
INSPECTION. 55-242

REFRIGERANT LINE 55-243
REMOVAL AND INSTALLATION <L.H.D. FRONT SIDE> 55-243
REMOVAL AND INSTALLATION <R.H.D. FRONT SIDE>. 55-245
REAR REFRIGERANT REMOVAL AND INSTALLATION <REAR SIDE> 55-247

DUCTS 55-248
REMOVAL AND INSTALLATION 55-248
REMOVAL AND INSTALLATION 55-249

VENTILATORS 55-250
REMOVAL AND INSTALLATION 55-250

Main Index
Group TOC

GENERAL INFORMATION

M1552000100577

The heater and cooling units of front and rear A/C in the heater and A/C systems are integrated for greater fan power and reduced noise. In the A/C system, single automatic A/C for the front, and heater, cooler, or dual automatic A/C for the rear are established.

Destination	**Front**	**Rear**		
	Automatic A/C	**Heater**	**Cooler**	**Automatic A/C (Dual Automatic A/C)**
Vehicles for Australia and New Zealand	Standard equipment	Without	Without	Standard equipment
Vehicles for China, Hong Kong and Singapore	Standard equipment	Without	Standard equipment	Option
Vehicles for GCC	Standard equipment	Without	Option	Option
Vehicles for general export and brazil	Standard equipment	Option	Option	Option

GENERAL SPECIFICATIONS

Item		**Specification**
Heater control type		Rotary type
Compressor type	Except vehicles for Hong Kong and Singapore	10S17
	Vehicles for Hong Kong and Singapore	MSC105CA
Front air conditioner	Cooling output W	5,400
	Heating output W	5,500
	Heating capacity of PTC heater (W)	120 × 2
Rear air conditioner	Cooling output W	2,100
	Heating output W	2,700

Main Index
Group TOC

SERVICE SPECIFICATIONS

M1551000300158

Item		Standard value
Idle speed r/min (N or P range)		750 ± 50
Idle-up speed r/min (N or P range)		850 ± 50
Air gap (magnetic clutch) mm	Except vehicles for Hong Kong and Singapore	0.3 – 0.5
	Vehicles for Hong Kong and Singapore	0.35 – 0.6
A/C refrigerant temperature switch operating temperature °C	Being turned off	155
	Being turned on	125
Resistance value for front air mixing damper control motor and potentiometer kΩ		1.70 – 5.00
Resistance value for mode selection damper control motor and potentiometer kΩ		0.80 – 4.80
Resistance value for rear air mixing damper control motor and potentiometer kΩ		1.20 – 4.80
Resistance value for rear temperature control knob kΩ		Approximately 3 or less

LUBRICANTS

M1551000400133

Item		Specified lubricant	Quantity
Compressor refrigerant unit lubricant mL	Except vehicles for Hong Kong and Singapore	ND-OIL 8	180 –195 (target value:180)
	Vehicles for Hong Kong and Singapore	SUN PAG 56	160 –180 (target value:160)
Each connection of refrigerant line	Except vehicles for Hong Kong and Singapore	ND-OIL 8	As required
	Vehicles for Hong Kong and Singapore	SUN PAG 56	As required
Refrigerant g	Single A/C	HFC134a (R134a)	560 ± 25
	Vehicles with rear cooler or dual automatic A/C <Except vehicles for Hong Kong and Singapore>	HFC134a (R134a)	700 ± 25
	Vehicles with rear cooler or dual automatic A/C <Vehicles for Hong Kong and Singapore>	HFC134a (R134a)	750 ± 25

Main Index
Group TOC

SPECIAL TOOL

M1551000600104

Tool	Number	Name	Use
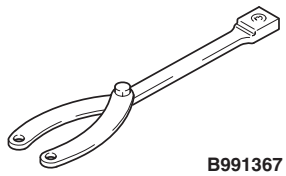 B991367	MB991367	Special spanner	Removal and installation of air conditioner compressor armature mounting nut
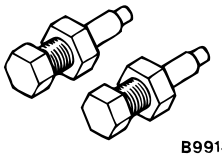 B991386	MB991386	Pin	
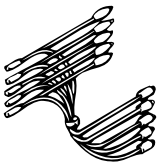 MB991658	MB991658	Test harness	Inspection of the A/C pressure sensor
A B 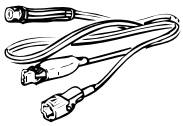 C 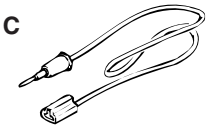 D 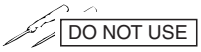 DO NOT USE MB991223AZ	MB991223 A: MB991219 B: MB991220 C: MB991221 D: MB991222	Harness set A: Test harness B: LED harness C: LED harness adapter D: Probe	Making voltage and resistance measurements during troubleshooting A: Connect pin contact pressure inspection B: Power circuit inspection C: Power circuit inspection D: Commercial tester connection
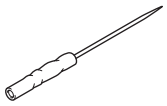 MB992006	MB992006	Extra fine probe	Continuity check and voltage measurement at harness wire or connector

Main Index
Group TOC

Tool	Number	Name	Use
A 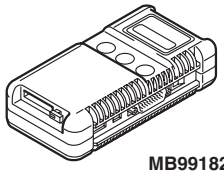 MB991824 B 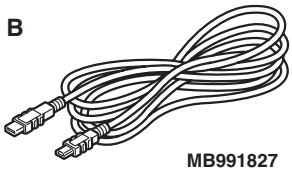 MB991827 C 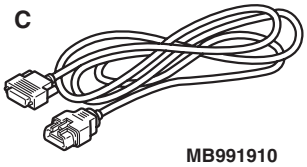 MB991910 D 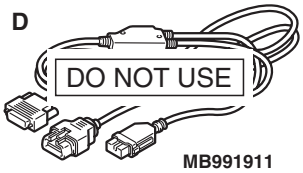 MB991911 E 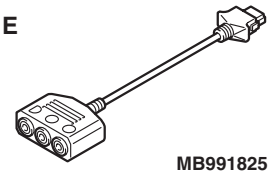 MB991825 F 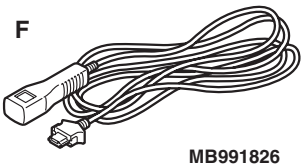 MB991826 MB991955	MB991955 A: MB991824 B: MB991827 C: MB991910 D: MB991911 E: MB991825 F: MB991826	M.U.T.-III sub-assembly A: Vehicle Communication Interface (V. C. I.) B: USB cable C: M.U.T.-III main harness A (applicable to vehicles with CAN communication) D: M.U.T.-III main harness B (applicable to vehicles without CAN communication) E: Measurement adapter F: Trigger harness	Check the air conditioner (The M.U.T.-III DTCs display, service data display and actuator test) **⚠ CAUTION** **For vehicles with CAN communication, use M.U.T.-III main harness A to send simulated vehicle speed. If you connect M.U.T.-III main harness B instead, the CAN communication does not function correctly.**

Main Index
Group TOC

SERVICE PRECAUTIONS

CAUTION LABEL

M1552017400183

The refrigerant handling precautions are described on the caution label as shown. Follow the instructions on the label upon handling the refrigerant.

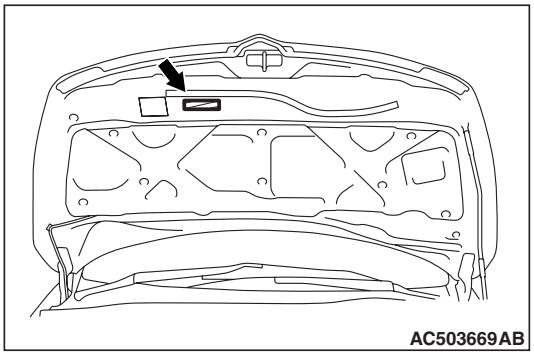

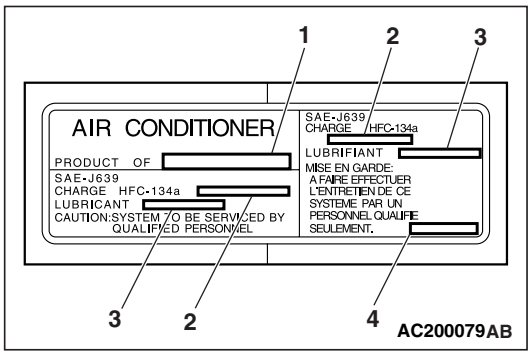

NO.	CONTENT
1	Name of air conditioner manufacturer
2	Amount of refrigerant
3	Name of compressor oil
4	Parts number

Main Index
Group TOC

TROUBLESHOOTING

DIAGNOSIS TROUBLESHOOTING FLOW

M1554004700191

Refer to GROUP 00, How to Use Troubleshooting/Inspection Service Points P.00-5.

DIAGNOSIS FUNCTION

M1554004800217

HOW TO READ DIAGNOSIS CODE

Connect the M.U.T.-III to the 16-pin diagnosis connector to read diagnosis code (Refer to GROUP 00, How to Use Troubleshooting/Inspection Service Points P.00-5).

HOW TO ERASE DIAGNOSIS CODE

Refer to GROUP 00, How to Use Troubleshooting/Inspection Service Points P.00-5.

DIAGNOSIS CODE CHART

M1554004900515

Code No.	Diagnostic item	Reference page	Service data display contents when diagnosis code is set
B1001	Interior temperature sensor system (short circuit) <Except vehicles for Hong Kong and Singapore>	P.55-10	25°C
	Interior temperature sensor system (short circuit) <Vehicles for Hong Kong and Singapore>	P.55-12	
B1002	Interior temperature sensor system (open circuit) <Except vehicles for Hong Kong and Singapore>	P.55-10	
	Interior temperature sensor system (open circuit) <Vehicles for Hong Kong and Singapore>	P.55-12	
B1011	Ambient temperature sensor system (short circuit)	P.55-14	20°C
B1012	Ambient temperature sensor system (open circuit)	P.55-14	
B1021	Air thermo sensor system (short circuit) <Except vehicles for Hong Kong and Singapore>	P.55-17	–6°C
	Air thermo sensor system (short circuit) <Vehicles for Hong Kong and Singapore>	P.55-19	
B1022	Air thermo sensor system (open circuit) <Except vehicles for Hong Kong and Singapore>	P.55-17	
	Air thermo sensor system (open circuit) <Vehicles for Hong Kong and Singapore>	P.55-19	
B1041	Potentiometer system for front air mix damper (short to power supply) <Except vehicles for Hong Kong and Singapore>	P.55-21	Moved to MAX HOT position
	Potentiometer system for front air mix damper (short to power supply) <Vehicles for Hong Kong and Singapore>	P.55-24	
B1042	Potentiometer system for front air mix damper (short to earth or open circuit) <Except vehicles for Hong Kong and Singapore>	P.55-21	
	Potentiometer system for front air mix damper (short to earth or open circuit) <Vehicles for Hong Kong and Singapore>	P.55-24	

Main Index
Group TOC

Code No.	Diagnostic item	Reference page	Service data display contents when diagnosis code is set
B1045	Motor drive system for front air mix damper	P.55-26	–
B1051	Potentiometer system for rear air mix damper (short to power supply) <Except vehicles for Hong Kong and Singapore with dual automatic A/C>	P.55-28	Moved to MAX HOT position
	Potentiometer system for rear air mix damper (short to power supply) <Vehicles for Hong Kong and Singapore with dual automatic A/C>	P.55-31	
B1052	Potentiometer system for rear air mix damper (short to earth or open circuit) <Except vehicles for Hong Kong and Singapore with dual automatic A/C>	P.55-28	
	Potentiometer system for rear air mix damper (short to earth or open circuit) <Vehicles for Hong Kong and Singapore with dual automatic A/C>	P.55-31	
B1055	Motor drive system for rear air mix damper <vehicles with dual automatic A/C>	P.55-33	–
B1061	Potentiometer system for air outlet switching damper (short to power supply) <Except vehicles for Hong Kong and Singapore>	P.55-35	Moved to DEF position
	Potentiometer system for air outlet switching damper (short to power supply) <Vehicles for Hong Kong and Singapore>	P.55-38	
B1062	Potentiometer system for air outlet switching damper (short to earth or open circuit) <Except vehicles for Hong Kong and Singapore>	P.55-35	
	Potentiometer system for air outlet switching damper (short to earth or open circuit) <Vehicles for Hong Kong and Singapore>	P.55-38	
B1065	Motor drive system for air outlet switching damper	P.55-40	–
U1073	Bus off error	P.55-42	–
U1100	Engine-related CAN time-out	P.55-43	–
U1109	ETACS related CAN communication time-out	P.55-44	–
U1120	Engine-related failure data	P.55-45	–

Main Index
Group TOC

DIAGNOSTIC TROUBLE CODE PROCEDURES

Code No. B1001,B1002: Interior Temperature Sensor system <Except vehicles for Hong Kong and Singapore>

Interior Temperature Sensor Circuit

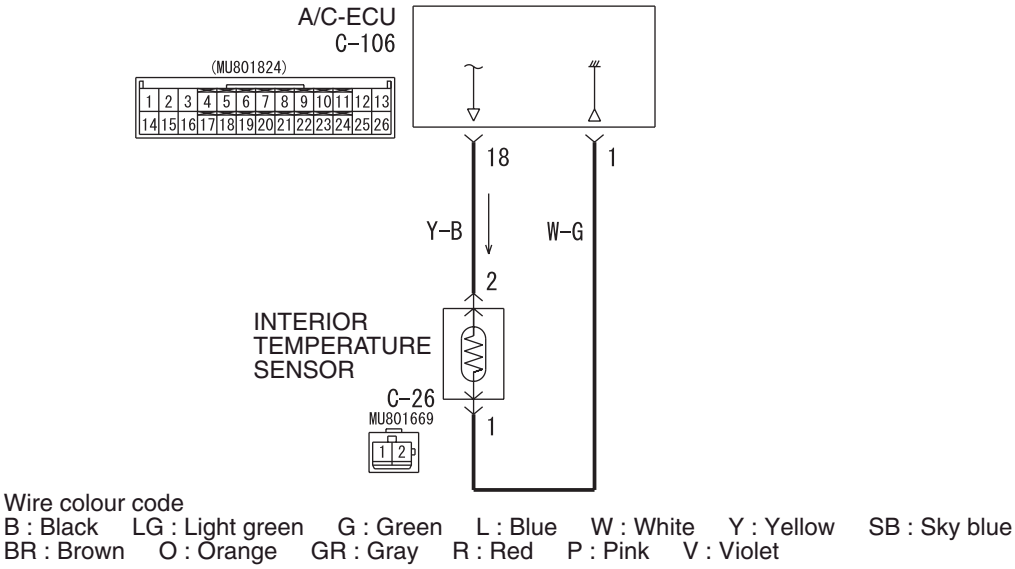

W4X55E10AA

COMMENTS ON TROUBLE SYMPTOM

This code is set when the interior temperature sensor circuit is open (Code No.B1002) or is short (Code No.B1001).

PROBABLE CAUSES

- Malfunction of the interior temperature sensor
- Damaged the wiring harness or connectors
- Malfunction of the automatic air conditioner control panel (A/C-ECU)

DIAGNOSIS PROCEDURE

STEP 1. M.U.T.-III data list

Check that the following service data display contents are normal. (Refer to P.55-198.)

- Item 01: Inside temperature sensor

Q: Is the check result normal?

YES : Go to Step 5.
NO : Go to Step 2.

STEP 2. Connector check: C-106 A/C-ECU connector and C-26 interior temperature sensor connector

Connectors: C-26, C-106 <LHD>

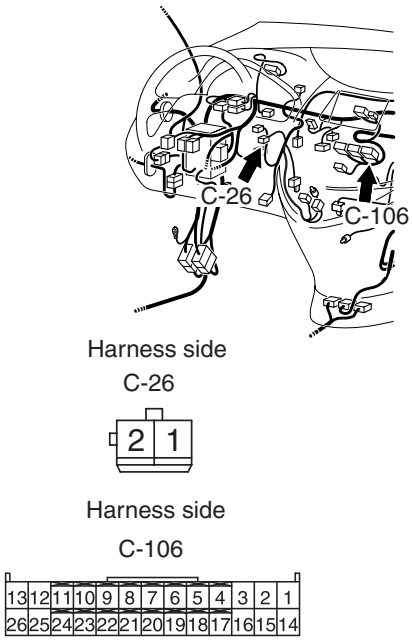

AC313393AB

Connectors: C-26, C-106 <RHD (Except vehicles for Hong Kong and Singapore)>

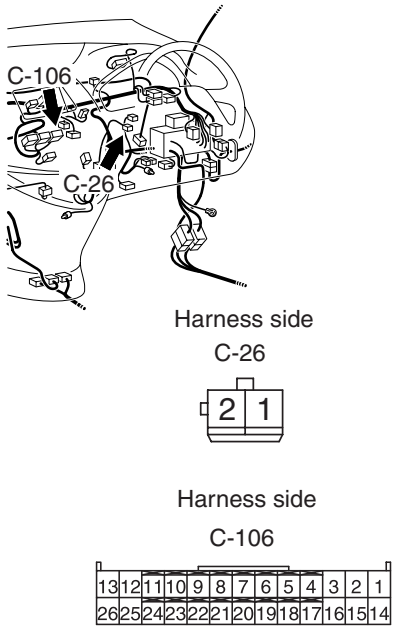

AC313407AB

Q: Is the check result normal?
YES : Go to Step 3.
NO : Repair the connector.

STEP 3. Check the wiring harness between C-106 A/C-ECU connector (terminals 1 and 18) and C-26 interior temperature sensor connector (terminals 1 and 2).

Connectors: C-26, C-106 <LHD>

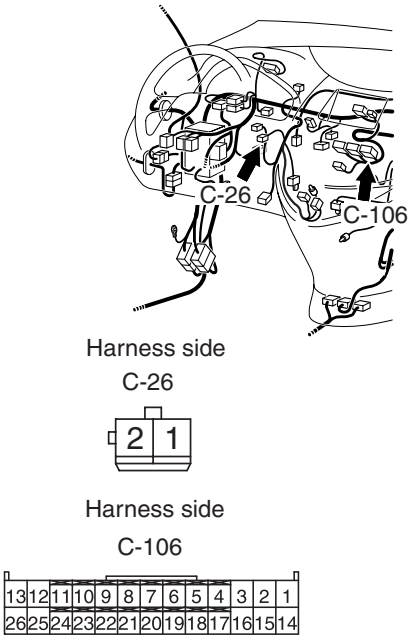

AC313393AB

Connectors: C-26, C-106 <RHD (Except vehicles for Hong Kong and Singapore)>

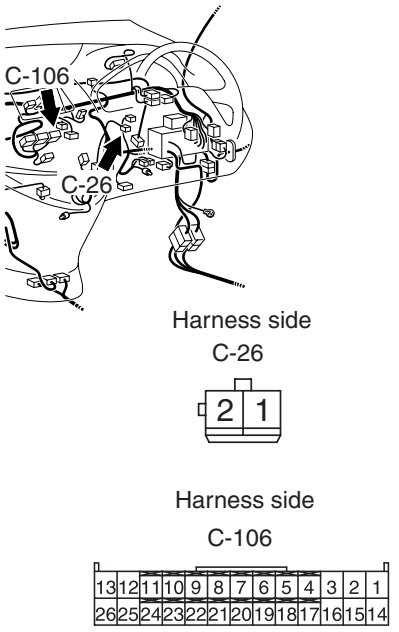

AC313407AB

- Check the sensor signal line and earth line for open or short circuit.

Q: Is the check result normal?
YES : Go to Step 4.
NO : Repair the wiring harness.

Main Index
Group TOC

STEP 4. Check the interior temperature sensor.
Refer to P.55-226.

Q: Is the check result normal?
YES : Go to Step 5.
NO : Replace the interior temperature sensor.

STEP 5. M.U.T.-III diagnosis code

Q: Is the diagnosis code set?
YES : Replace the automatic air conditioner control panel (A/C-ECU).
NO : The trouble can be an intermittent malfunction (Refer to GROUP 00, How to Cope with Intermittent Malfunction P.00-5).

Code No. B1001,B1002: Interior Temperature Sensor system <Vehicles for Hong Kong and Singapore>

Interior Temperature Sensor Circuit

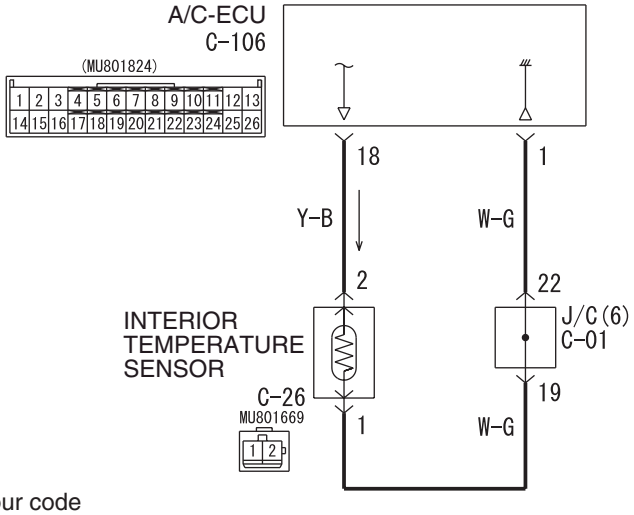

Wire colour code
B : Black LG : Light green G : Green L : Blue W : White Y : Yellow SB : Sky blue
BR : Brown O : Orange GR : Grey R : Red P : Pink V : Violet PU : Purple

W6X55X001A

COMMENTS ON TROUBLE SYMPTOM

This code is set when the interior temperature sensor circuit is open (Code No.B1002) or is short (Code No.B1001).

PROBABLE CAUSES

- Malfunction of the interior temperature sensor
- Damaged the wiring harness or connectors
- Malfunction of the automatic air conditioner control panel (A/C-ECU)

DIAGNOSIS PROCEDURE

STEP 1. M.U.T.-III data list
Check that the following service data display contents are normal. (Refer to P.55-198.)

- Item 01: Inside temperature sensor

Q: Is the check result normal?
YES : Go to Step 5.
NO : Go to Step 2.

STEP 2. Connector check: C-106 A/C-ECU connector and C-26 interior temperature sensor connector

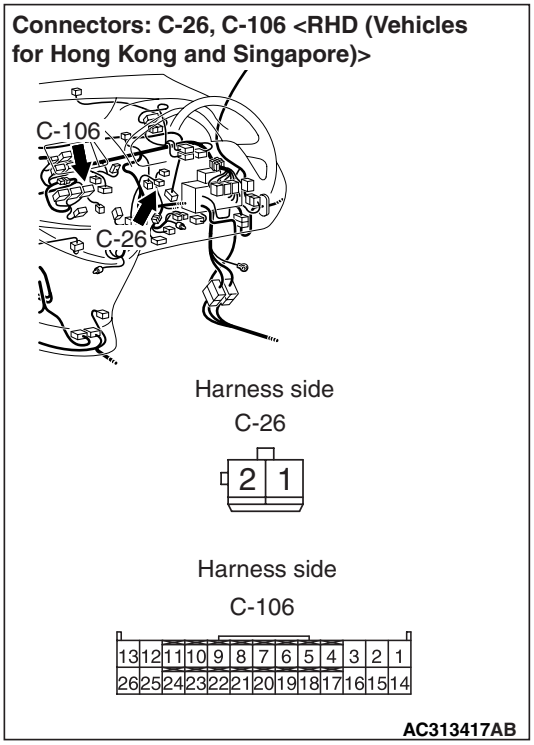

Q: Is the check result normal?
YES : Go to Step 3.
NO : Repair the connector.

STEP 3. Check the wiring harness between C-106 A/C-ECU connector (terminals 1 and 18) and C-26 interior temperature sensor connector (terminals 1 and 2).

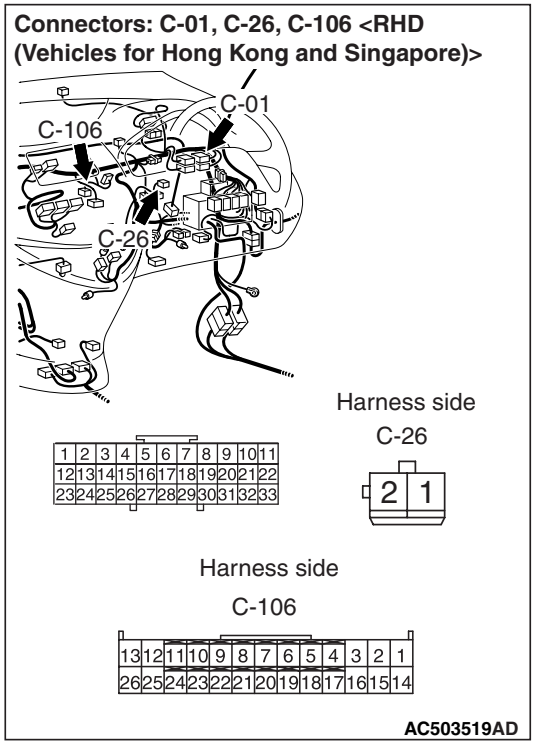

NOTE: Prior to the wiring harness inspection, check joint connector C-01, and repair if necessary.

- Check the sensor signal line and earth line for open or short circuit.

Q: Is the check result normal?
YES : Go to Step 4.
NO : Repair the wiring harness.

STEP 4. Check the interior temperature sensor.
Refer to P.55-226.

Q: Is the check result normal?
YES : Go to Step 5.
NO : Replace the interior temperature sensor.

STEP 5. M.U.T.-III diagnosis code

Q: Is the diagnosis code set?
YES : Replace the automatic air conditioner control panel (A/C-ECU).
NO : The trouble can be an intermittent malfunction (Refer to GROUP 00, How to Cope with Intermittent Malfunction P.00-5).

Main Index
Group TOC

Code No. B1011,B1012: Ambient temperature sensor system

Ambient Temperature Sensor Circuit

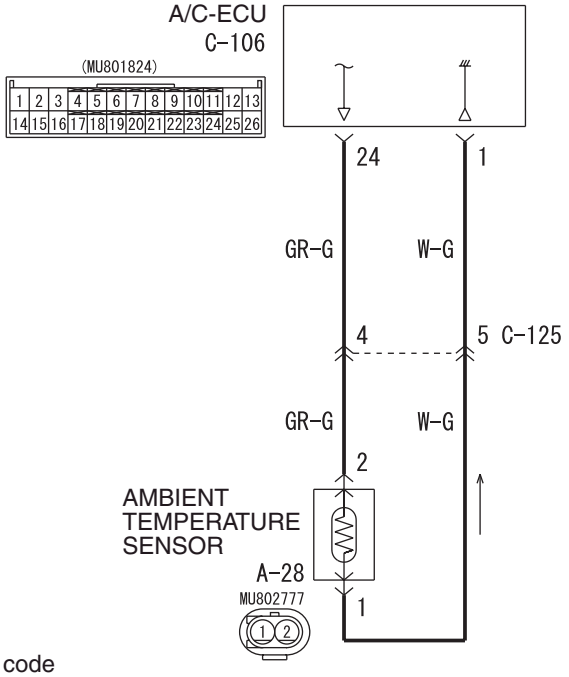

Wire colour code
B : Black LG : Light green G : Green L : Blue W : White Y : Yellow SB : Sky blue
BR : Brown O : Orange GR : Gray R : Red P : Pink V : Violet

W4X55E08AA

COMMENTS ON TROUBLE SYMPTOM

This code is set when the ambient temperature sensor circuit is open (Code No.B1012) or is short (Code No.B1011).

PROBABLE CAUSES

- Malfunction of the ambient temperature sensor
- Damaged the wiring harness and connectors
- Malfunction of the automatic air conditioner control panel (A/C-ECU)

Main Index
Group TOC

DIAGNOSIS PROCEDURE

STEP 1. M.U.T.-III data list

Check that the following service data display contents are normal. (Refer to P.55-198.)

- Item 02: Ambient temperature sensor

Q: Is the check result normal?

YES : Go to Step 5.
NO : Go to Step 2.

STEP 2. Connector check: A-28 ambient temperature sensor connector and C-106 A/C-ECU connector

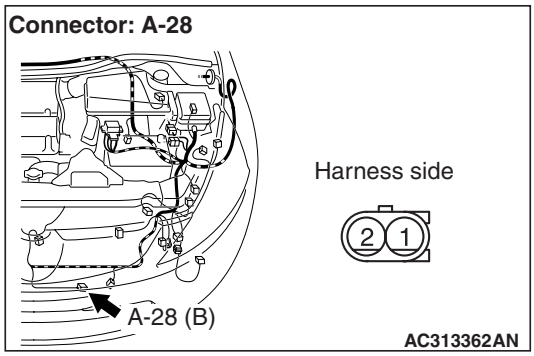

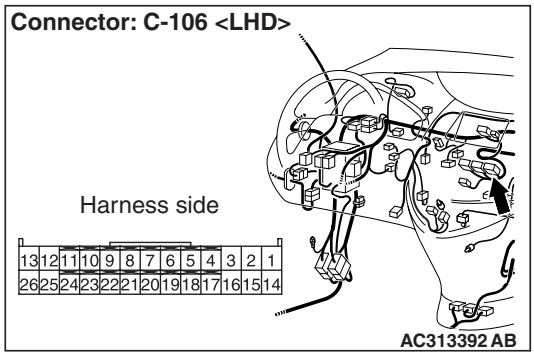

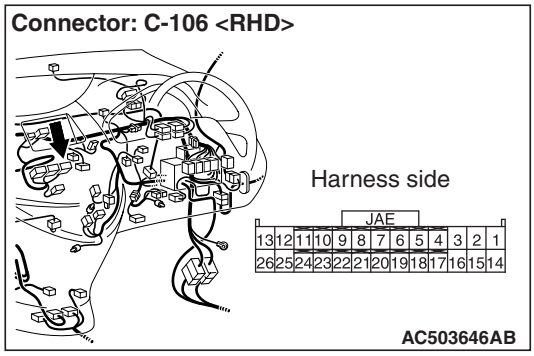

Q: Is the check result normal?

YES : Go to Step 3.
NO : Repair the connector.

Main Index
Group TOC

STEP 3. Check the wiring harness between A-28 ambient temperature sensor connector (terminals 1 and 2) and C-106 A/C-ECU connector (terminals 1 and 24).

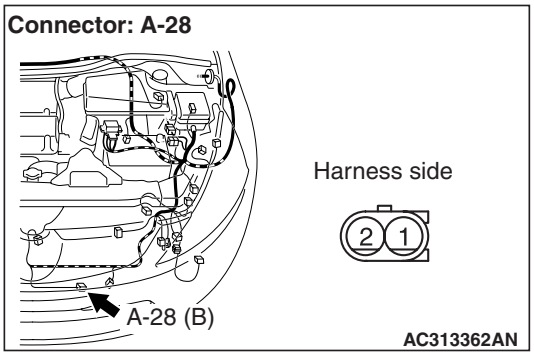

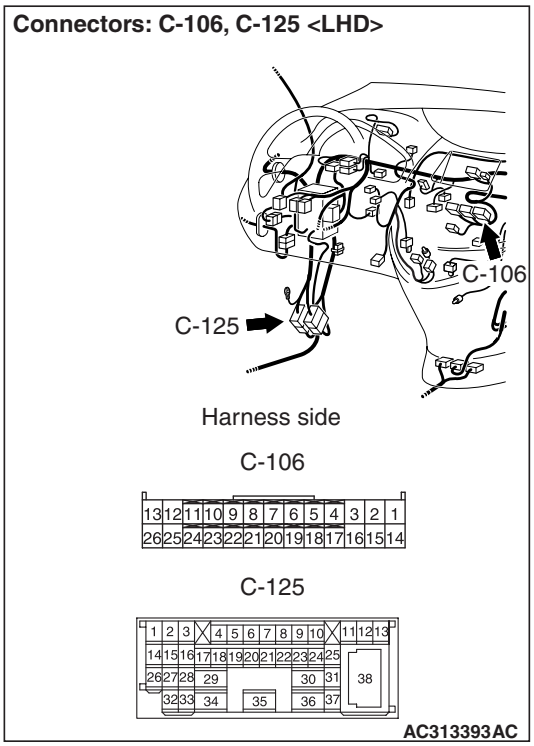

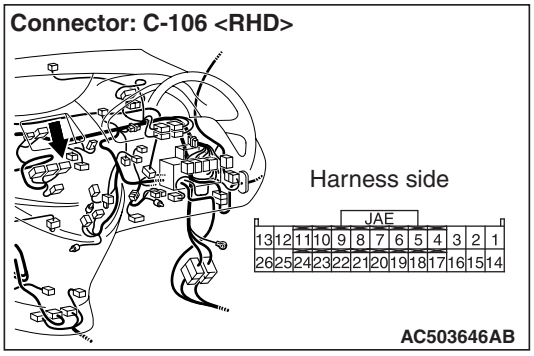

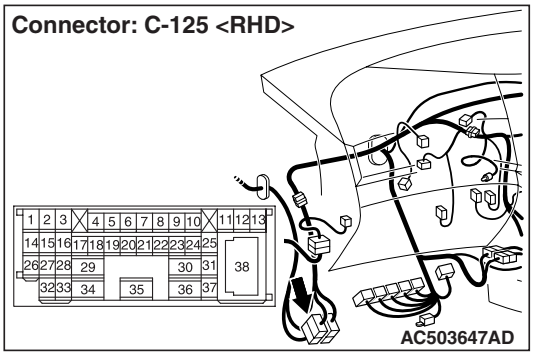

NOTE: Prior to the wiring harness inspection, check intermediate connector C-125, and repair if necessary.

- Check the sensor signal line and earth line for open or short circuit.

Q: Is the check result normal?
YES : Go to Step 4.
NO : Repair the wiring harness.

STEP 4. Check the ambient temperature sensor.
Refer to P.55-226.

Q: Is the check result normal?
YES : Go to Step 5.
NO : Replace the ambient temperature sensor.

STEP 5. M.U.T.-III diagnosis code

Q: Is the diagnosis code set?
YES : Replace the automatic air conditioner control panel (A/C-ECU).
NO : The trouble can be an intermittent malfunction (Refer to GROUP 00, How to Cope with Intermittent Malfunction P.00-5).

Main Index
Group TOC

Code No. B1021,B1022: Air Thermo Sensor system <Except vehicles for Hong Kong and Singapore>

Air Thermo Sensor Circuit

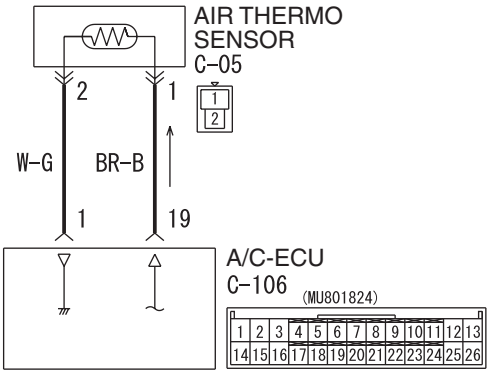

Wire colour code
B : Black LG : Light green G : Green L : Blue W : White Y : Yellow SB : Sky blue
BR : Brown O : Orange GR : Gray R : Red P : Pink V : Violet

W4X55E06AA

COMMENTS ON TROUBLE SYMPTOM

This code is set when the air thermo sensor circuit is open (Code No.B1022) or is short (Code No.B1021).

PROBABLE CAUSES

- Malfunction of the air thermo sensor
- Damaged the wiring harness or connectors
- Malfunction of the automatic air conditioner control panel (A/C-ECU)

DIAGNOSIS PROCEDURE

STEP 1. M.U.T.-III data list

Check that the following service data display contents are normal. (Refer to P.55-198.)

- Item 03: Air thermo sensor

Q: Is the check result normal?
YES : Go to Step 5.
NO : Go to Step 2.

Main Index
Group TOC

STEP 2. Connector check: C-106 A/C-ECU connector and C-05 air thermo sensor connector

Connectors: C-05, C-106 <LHD>

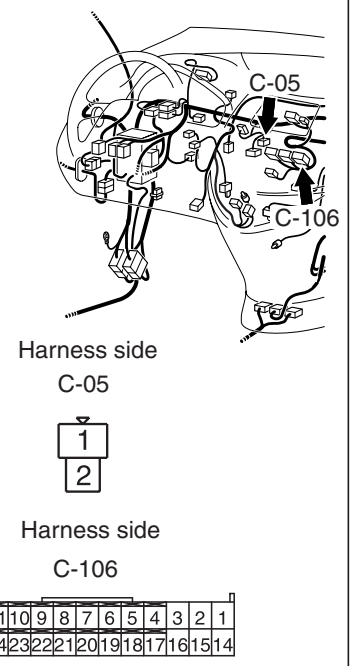

AC313393AD

Connectors: C-05, C-106 <RHD (Except vehicles for Hong Kong and Singapore)>

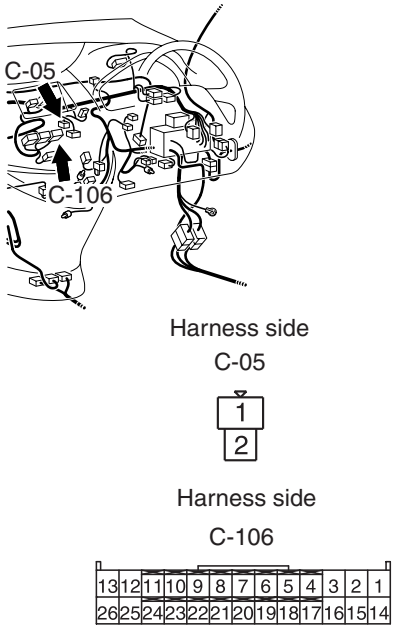

AC313407AC

Q: Is the check result normal?
YES : Go to Step 3.
NO : Repair the connector.

STEP 3. Check the wiring harness between C-106 A/C-ECU connector (terminals 1 and 19) and C-05 air thermo sensor connector (terminals 2 and 1).

Connectors: C-05, C-106 <LHD>

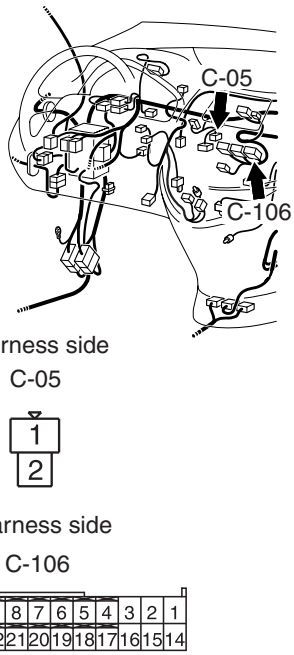

AC313393AD

Connectors: C-05, C-106 <RHD (Except vehicles for Hong Kong and Singapore)>

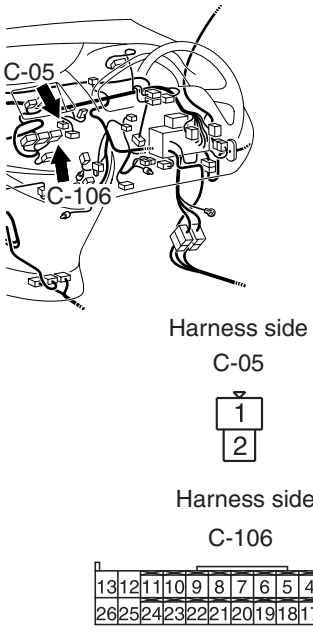

AC313407AC

- Check the sensor signal line and earth line for open or short circuit.

Q: Is the check result normal?
YES : Go to Step 4.
NO : Repair the wiring harness.

Main Index
Group TOC

STEP 4. Check the air thermo sensor.
Refer to P.55-220.

Q: Is the check result normal?
YES : Go to Step 5.
NO : Replace the air thermo sensor.

STEP 5. M.U.T.-III diagnosis code

Q: Is the diagnosis code set?
YES : Replace the automatic air conditioner control panel (A/C-ECU).
NO : The trouble can be an intermittent malfunction (Refer to GROUP 00, How to Cope with Intermittent Malfunction P.00-5).

Code No. B1021,B1022: Air thermo sensor system <Vehicles for Hong Kong and Singapore>

Air Thermo Sensor Circuit

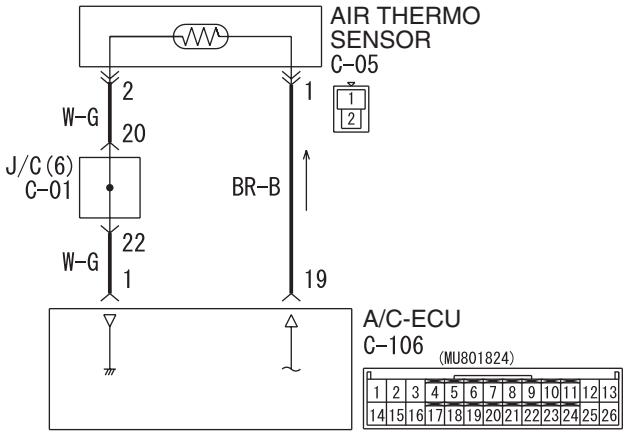

Wire colour code
B : Black LG : Light green G : Green L : Blue W : White Y : Yellow SB : Sky blue
BR : Brown O : Orange GR : Grey R : Red P : Pink V : Violet PU : Purple

W6X55X002A

COMMENTS ON TROUBLE SYMPTOM

This code is set when the air thermo sensor circuit is open (Code No.B1022) or is short (Code No.B1021).

PROBABLE CAUSES

- Malfunction of the air thermo sensor
- Damaged the wiring harness or connectors
- Malfunction of the automatic air conditioner control panel (A/C-ECU)

DIAGNOSIS PROCEDURE

STEP 1. M.U.T.-III data list
Check that the following service data display contents are normal. (Refer to P.55-198.)

- Item 03: Air thermo sensor

Q: Is the check result normal?
YES : Go to Step 5.
NO : Go to Step 2.

Main Index
Group TOC

STEP 2. Connector check: C-106 A/C-ECU connector and C-05 air thermo sensor connector

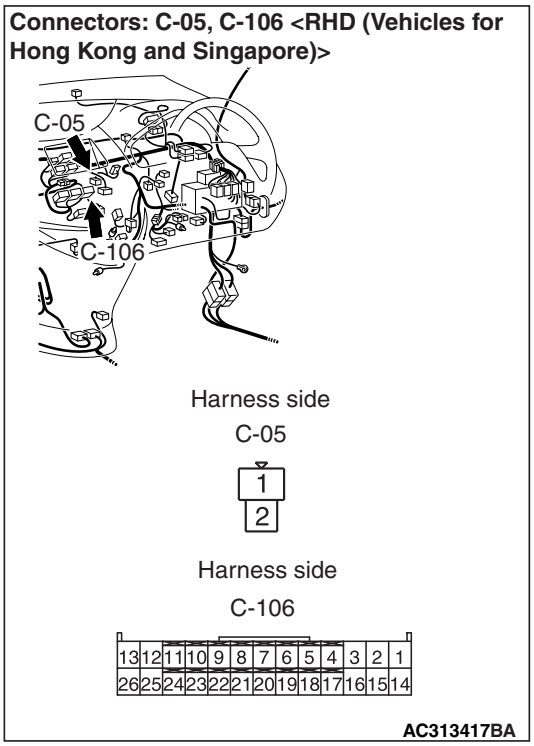

Q: Is the check result normal?
YES : Go to Step 3.
NO : Repair the connector.

STEP 3. Check the wiring harness between C-106 A/C-ECU connector (terminals 1 and 19) and C-05 air thermo sensor connector (terminals 2 and 1).

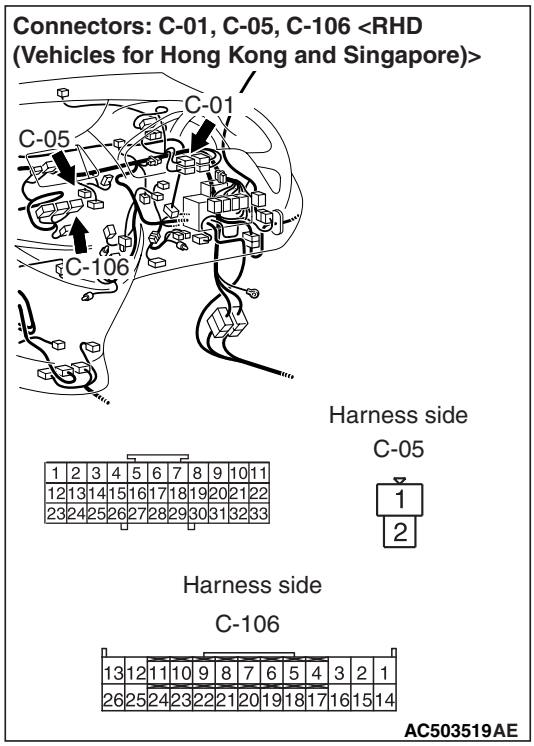

NOTE: Prior to the wiring harness inspection, check joint connector C-01, and repair if necessary.

- Check the sensor signal line and earth line for open or short circuit.

Q: Is the check result normal?
YES : Go to Step 4.
NO : Repair the wiring harness.

STEP 4. Check the air thermo sensor.
Refer to P.55-220.

Q: Is the check result normal?
YES : Go to Step 5.
NO : Replace the air thermo sensor.

STEP 5. M.U.T.-III diagnosis code

Q: Is the diagnosis code set?
YES : Replace the automatic air conditioner control panel (A/C-ECU).
NO : The trouble can be an intermittent malfunction (Refer to GROUP 00, How to Cope with Intermittent Malfunction P.00-5).

Main Index
Group TOC

Code No. B1041,B1042: Potentiometer system for the Front Air Mixing Damper <Except Vehicles for Hong Kong and Singapore>

Front Air Mixing Damper Control Motor And Potentiometer Circuit

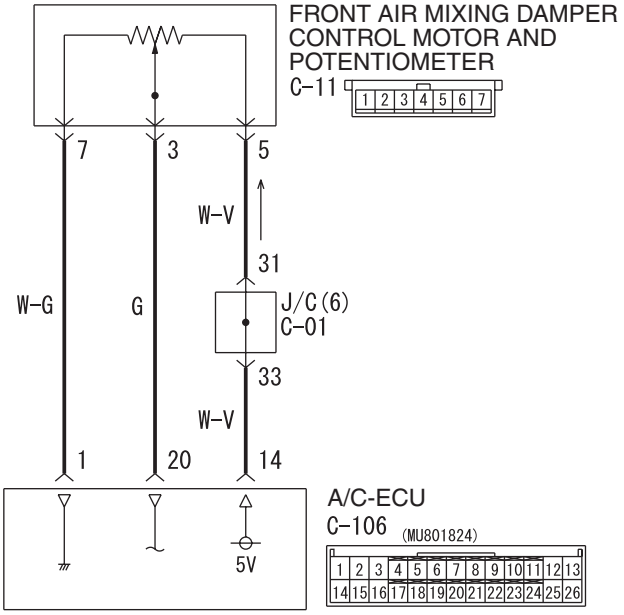

Wire colour code
B : Black LG : Light green G : Green L : Blue W : White Y : Yellow SB : Sky blue
BR : Brown O : Orange GR : Gray R : Red P : Pink V : Violet

W4X55E05AA

COMMENTS ON TROUBLE SYMPTOM

This code is set when the air mixing damper control motor potentiometer does not send any signal to the A/C-ECU due to short or open circuit.

PROBABLE CAUSES

- Malfunction of the front air mixing damper control motor and potentiometer
- Damaged the wiring harness or connectors
- Malfunction of the automatic air conditioner control panel (A/C-ECU)

Main Index
Group TOC

DIAGNOSIS PROCEDURE

STEP 1. M.U.T.-III data list

Check that the following service data display contents are normal. (Refer to P.55-198.)

- Item 10: F.Air mix potentiometer
- Item 11: F.Air mix potentiometer (Target)

Q: Is the check result normal?

YES : Go to Step 5.
NO : Go to Step 2.

STEP 2. Connector check: C-106 A/C-ECU connector and C-11 front air mixing damper control motor and potentiometer connector

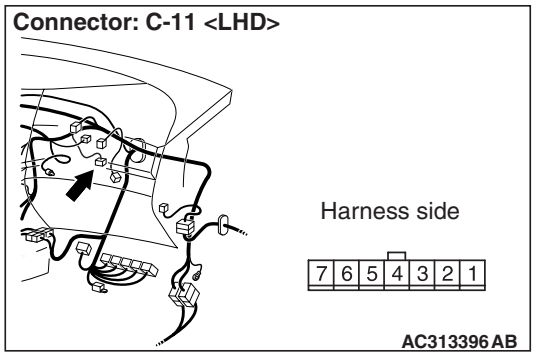

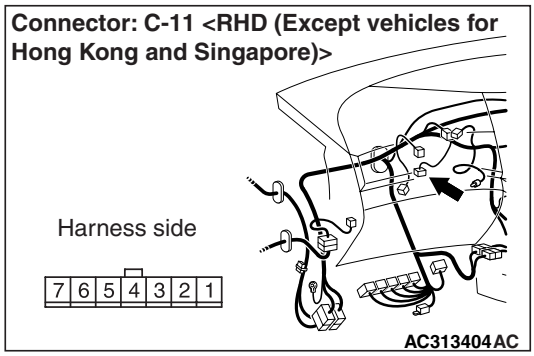

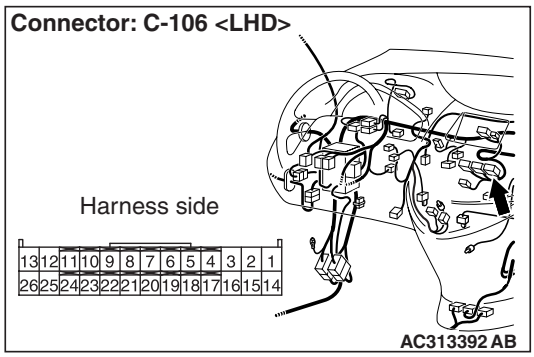

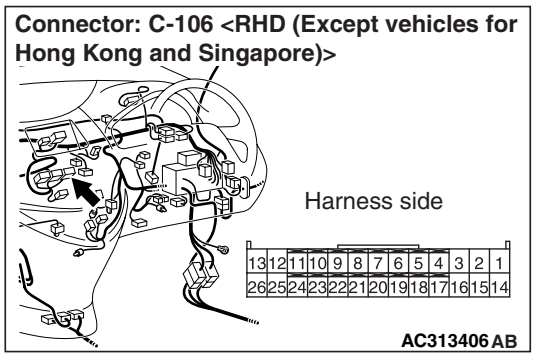

Q: Is the check result normal?

YES : Go to Step 3.
NO : Repair the connector.

Main Index
Group TOC

STEP 3. Check the wiring harness between C-106 A/C-ECU connector (terminals 1, 14 and 20) and C-11 front air mixing damper control motor and potentiometer connector (terminals 7, 5 and 3).

Connectors: C-01, C-106 <LHD>

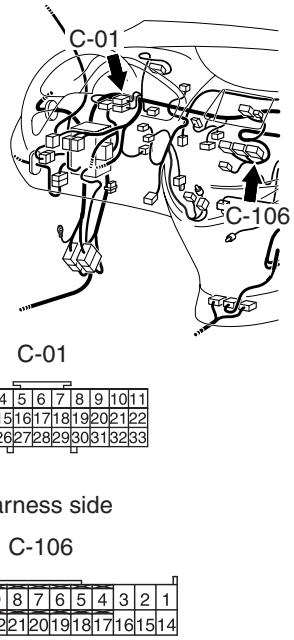

AC313393AE

Connectors: C-01, C-106 <RHD (Except vehicles for Hong Kong and Singapore)>

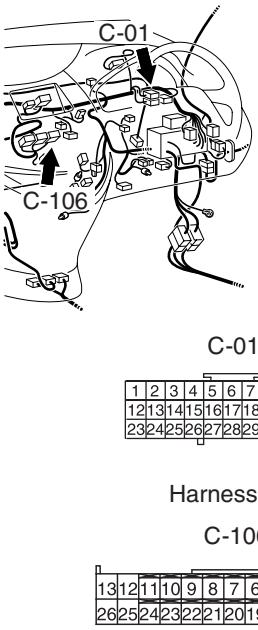

AC313407BB

Connector: C-11 <LHD>

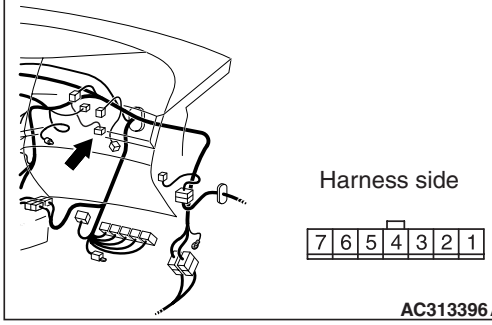

AC313396AB

Connector: C-11 <RHD (Except vehicles for Hong Kong and Singapore)>

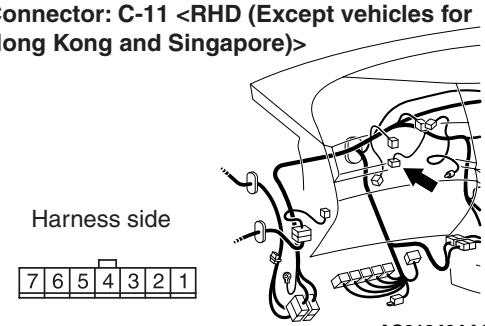

AC313404AC

NOTE: Prior to the wiring harness inspection, check joint connector C-01, and repair if necessary.

- Check the potentiometer power supply, earth and signal line for open or short circuit.

Q: Is the check result normal?
YES : Go to Step 4.
NO : Repair the wiring harness.

STEP 4. Check the front air mixing damper control motor and potentiometer.
Refer to P.55-223.

Q: Is the check result normal?
YES : Go to Step 5.
NO : Replace the front air mixing damper control motor and potentiometer.

STEP 5. M.U.T.-III diagnosis code

Q: Is the diagnosis code set?
YES : Replace the automatic air conditioner control panel (A/C-ECU).
NO : The trouble can be an intermittent malfunction (Refer to GROUP 00, How to Cope with Intermittent Malfunction P.00-5).

Main Index
Group TOC

Code No. B1041,B1042: Potentiometer system for the Air Mixing Damper <Vehicles for Hong Kong and Singapore>

Front Air Mixing Damper Control Motor And Potentiometer Circuit

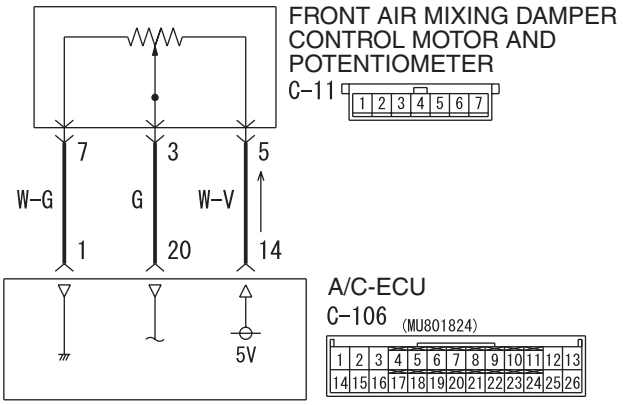

Wire colour code
B : Black LG : Light green G : Green L : Blue W : White Y : Yellow SB : Sky blue
BR : Brown O : Orange GR : Gray R : Red P : Pink V : Violet

W4X55E04AA

COMMENTS ON TROUBLE SYMPTOM

This code is set when the front air mixing damper control motor potentiometer does not send any signal to the A/C-ECU due to short or open circuit.

PROBABLE CAUSES

- Malfunction of the front air mixing damper control motor and potentiometer
- Damaged the wiring harness or connectors
- Malfunction of the automatic air conditioner control panel (A/C-ECU)

DIAGNOSIS PROCESURE

STEP 1. M.U.T.-III data list

Check that the following service data display contents are normal. (Refer to P.55-198.)

- Item 10: F.Air mix potentiometer
- Item 11: F.Air mix potentiometer (Target)

Q: Is the check result normal?
YES : Go to Step 5.
NO : Go to Step 2.

STEP 2. Connector check: C-106 A/C-ECU connector and C-11 front air mixing damper control motor and potentiometer connector

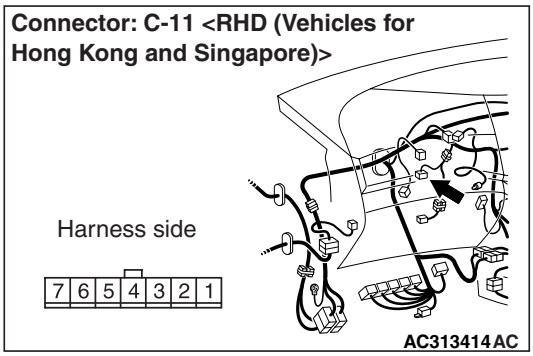

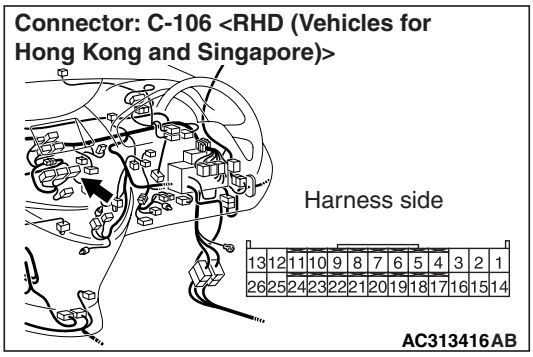

Q: Is the check result normal?
YES : Go to Step 3.
NO : Repair the connector.

Main Index
Group TOC

STEP 3. Check the wiring harness between C-106 A/C-ECU connector (terminals 14, 20 and 1) and C-11 front air mixing damper control motor and potentiometer connector (terminals 5, 3 and 7).

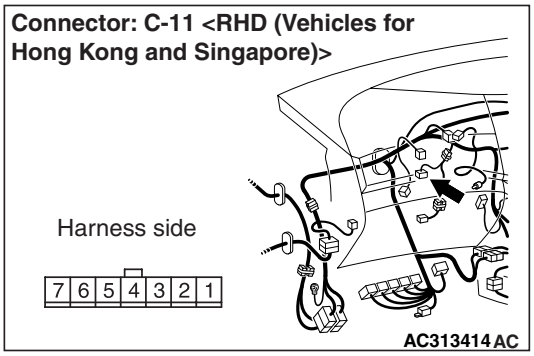

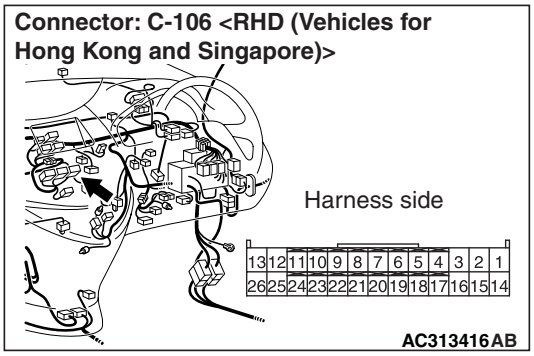

- Check the potentiometer power supply, earth and signal line for open or short circuit.

Q: Is the check result normal?
YES : Go to Step 4.
NO : Repair the wiring harness.

STEP 4. Check the front air mixing damper control motor and potentiometer.
Refer to P.55-223.

Q: Is the check result normal?
YES : Go to Step 5.
NO : Replace the front air mixing damper control motor and potentiometer.

STEP 5. M.U.T.-III diagnosis code

Q: Is the diagnosis code set?
YES : Replace the automatic air conditioner control panel (A/C-ECU).
NO : The trouble can be an intermittent malfunction (Refer to GROUP 00, How to Cope with Intermittent Malfunction P.00-5).

Main Index
Group TOC

Code No.B1045: Motor drive system for the front air mix damper

Front Air Mixing Damper Control Motor And Potentiometer Circuit

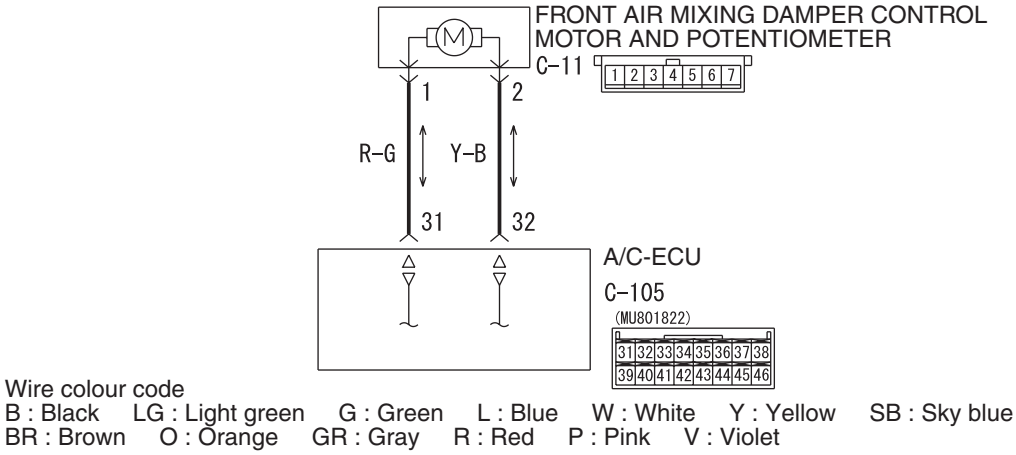

AC503241
W4X55E03AA

COMMENTS ON TROUBLE SYMPTOM

This code is set when the air mixing damper cannot be rotated to the preset opening angle.

PROBABLE CAUSES

- Malfunction of the front air mixing damper control motor and potentiometer
- Malfunction of the automatic air conditioner control panel (A/C-ECU)
- Damaged the wiring harness or connectors

DIAGNOSIS PROCEDURE

STEP 1. M.U.T.-III actuator test

Check that the following actuator test can be executed normally. (Refer to P.55-201.)

- Item 10: F.Air mix dumper motor: 0%
- Item 11: F.Air mix dumper motor: 50%
- Item 12: F.Air mix dumper motor: 100%

Q: Is the check result normal?
YES : Go to Step 5.
NO : Go to Step 2.

STEP 2. Connector check: C-105 A/C-ECU connector and C-11 front air mixing damper control motor and potentiometer connector

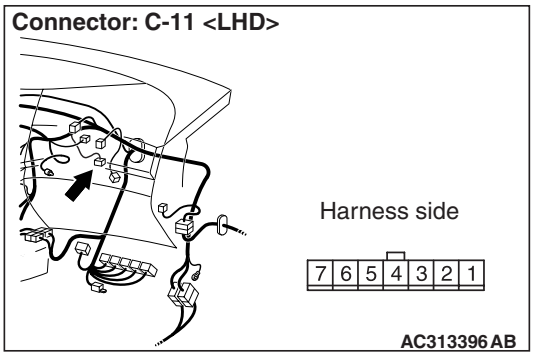

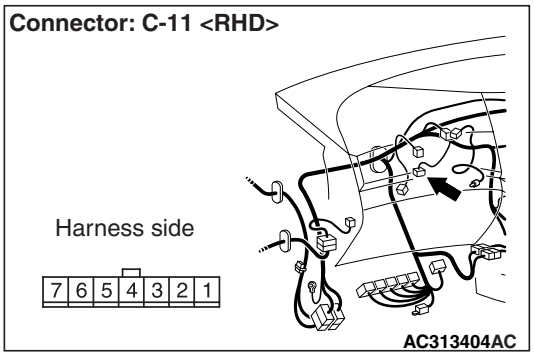

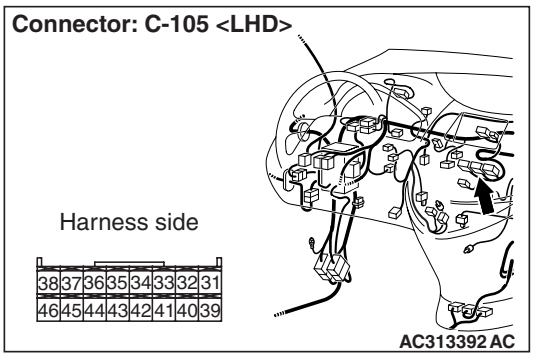

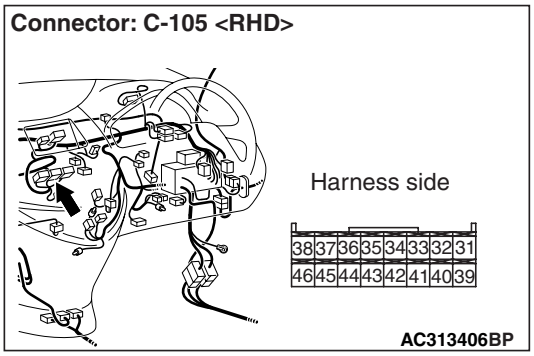

Q: Is the check result normal?
YES : Go to Step 3.
NO : Repair the connector.

STEP 3. Check the wiring harness between C-105 A/C-ECU connector (terminals 31 and 32) and C-11 front air mixing damper control motor and potentiometer connector (terminals 1 and 2).

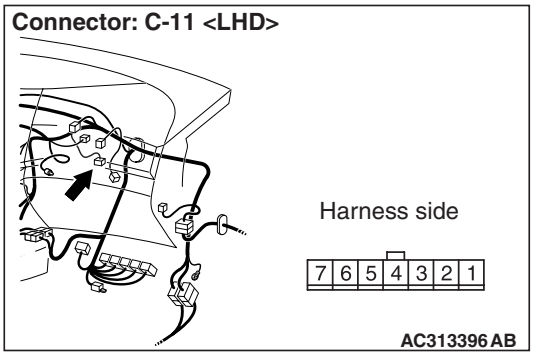

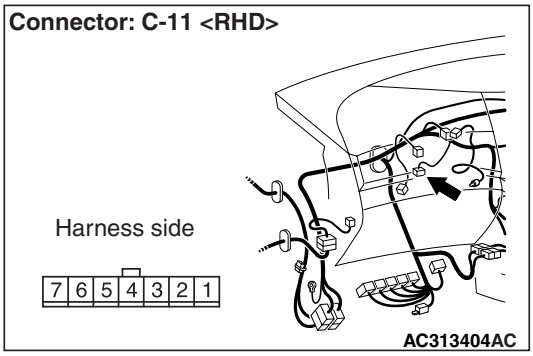

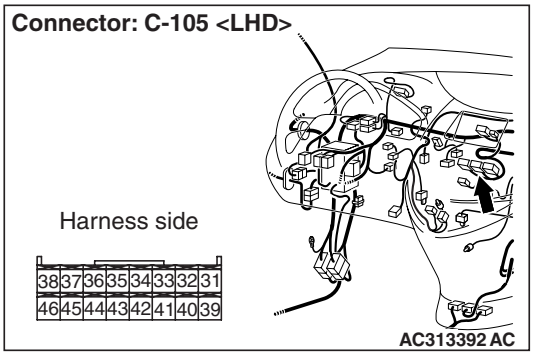

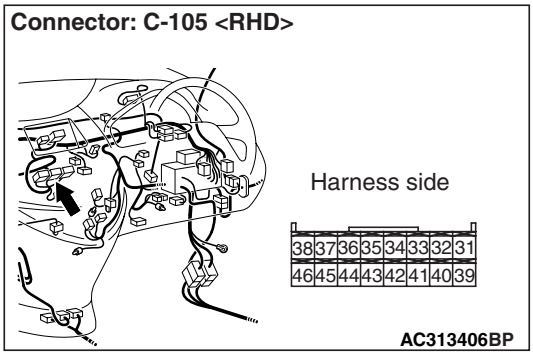

- Check the motor activating lines for open or short circuit.

Q: Is the check result normal?
YES : Go to Step 4.
NO : Repair the wiring harness.

Main Index
Group TOC

STEP 4. Check the front air mixing damper control motor and potentiometer.
Refer to P.55-223.

Q: Is the check result normal?
YES : Go to Step 5.
NO : Replace the air mixing damper control motor and potentiometer.

STEP 5. M.U.T.-III diagnosis code

Q: Is the diagnosis code set?
YES : Replace the automatic air conditioner control panel (A/C-ECU).
NO : The trouble can be an intermittent malfunction (Refer to GROUP 00, How to Cope with Intermittent Malfunction P.00-5).

Code No. B1051,B1052: Potentiometer system for rear air mixing damper <Except Vehicles for Hong Kong and Singapore (Vehicles with dual automatic A/C)>

Rear Air Mixing Damper Control Motor And Potentiometer Circuit

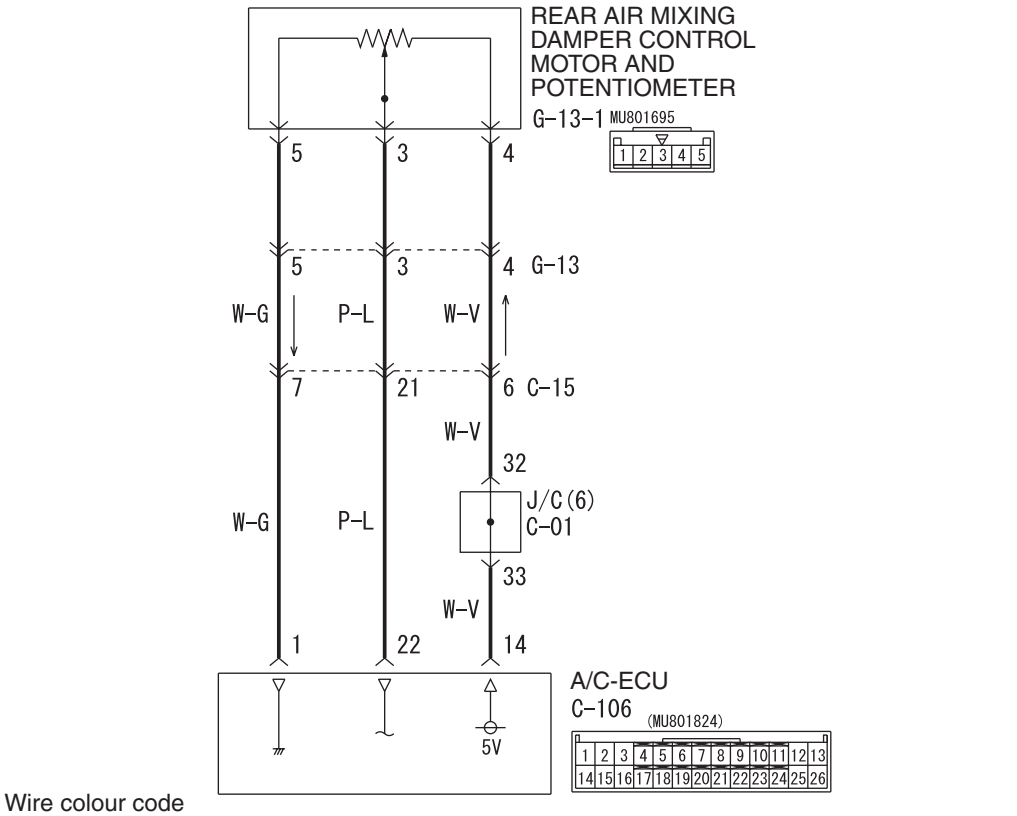

W4X55E31AA

COMMENTS ON TROUBLE SYMPTOM

This code is set when the rear air mixing damper control motor potentiometer does not send any signal to the A/C-ECU due to short or open circuit.

PROBABLE CAUSES

- Malfunction of the rear air mixing damper control motor and potentiometer
- Damaged the wiring harness or connectors
- Malfunction of the automatic air conditioner control panel (A/C-ECU)

DIAGNOSIS PROCEDURE

STEP 1. M.U.T.-III data list

Check that the following service data display contents are normal. (Refer to P.55-198.)

- Item 12: R.Air mix potentiometer
- Item 13: R.Air mix potentiometer (Target)

Q: Is the check result normal?

YES : Go to Step 5.
NO : Go to Step 2.

STEP 2. Connector check: C-106 A/C-ECU connector and G-13-1 rear air mixing damper control motor and potentiometer connector

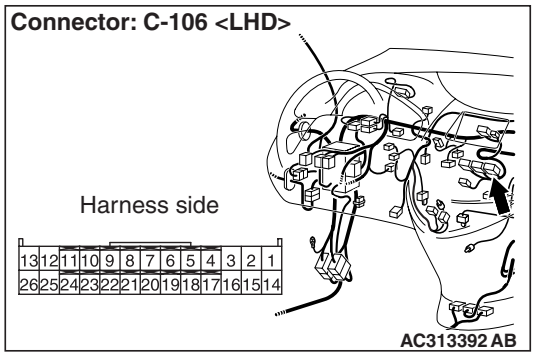

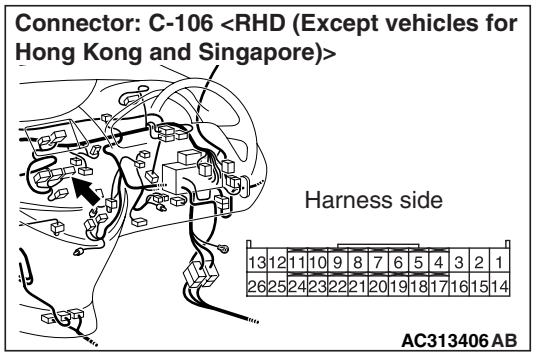

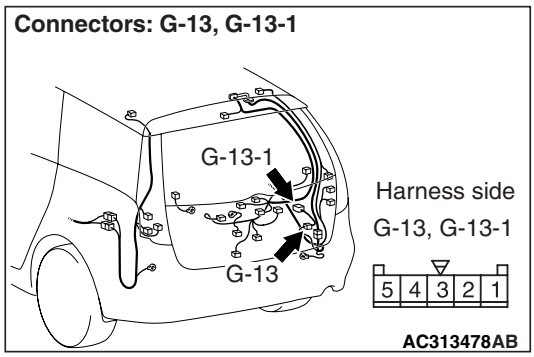

Q: Is the check result normal?

YES : Go to Step 3.
NO : Repair the connector.

Main Index
Group TOC

STEP 3. Check the wiring harness between C-106 A/C-ECU connector (terminals 14, 22 and 1) and G-13-1 rear air mixing damper control motor and potentiometer connector (terminals 4, 3 and 5).

Connectors: C-01, C-106 <LHD>

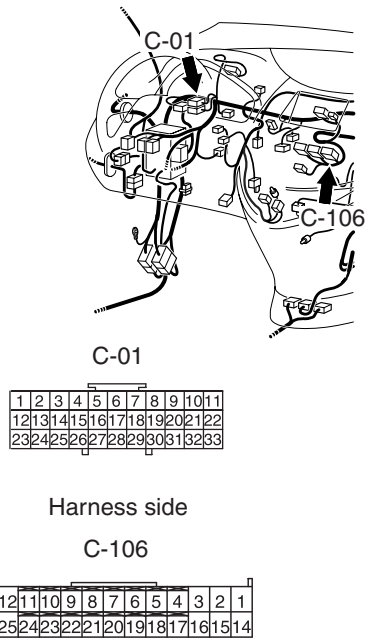

AC313393AE

Connectors: C-01, C-15, C-106 <RHD (Except vehicles for Hong Kong and Singapore)>

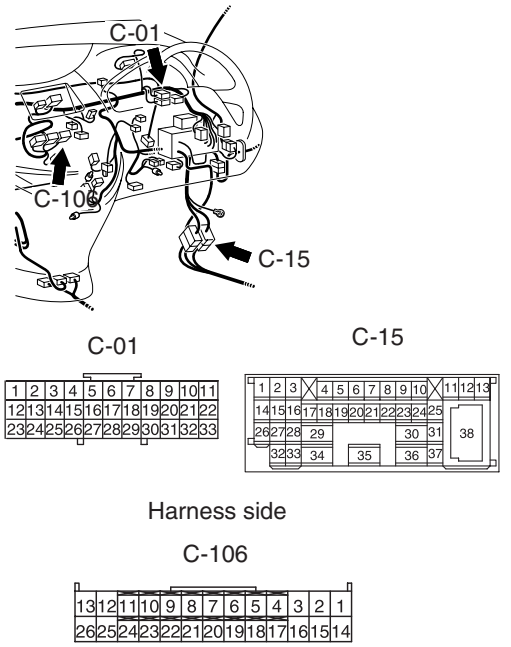

AC313407BB

Connectors: G-13, G-13-1

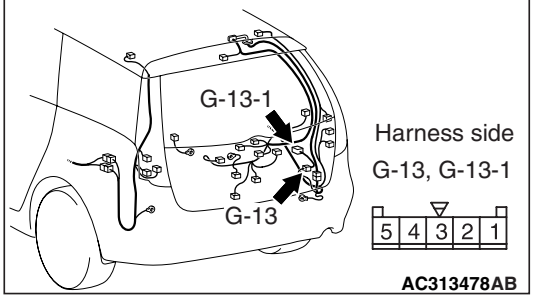

AC313478AB

NOTE:

Connector: C-15 <LHD>

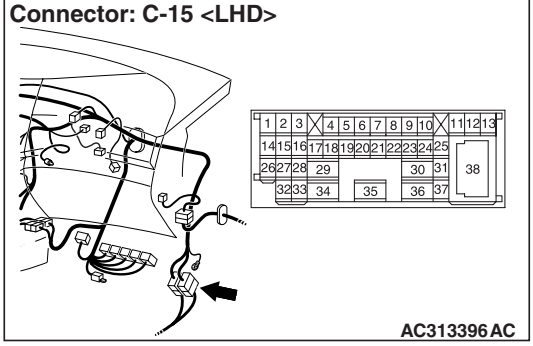

AC313396AC

Prior to the wiring harness inspection, check intermediate connector G-13, C-15 and joint connector C-01, and repair if necessary.

- Check the potentiometer power supply, earth and signal line for open or short circuit.

Q: Is the check result normal?
YES : Go to Step 4.
NO : Repair the wiring harness.

STEP 4. Check the rear air mixing damper control motor and potentiometer.
Refer to P.55-232.

Q: Is the check result normal?
YES : Go to Step 5.
NO : Replace the rear air mixing damper control motor and potentiometer.

STEP 5. M.U.T.-III diagnosis code

Q: Is the diagnosis code set?
YES : Replace the automatic air conditioner control panel (A/C-ECU).
NO : The trouble can be an intermittent malfunction (Refer to GROUP 00, How to Cope with Intermittent Malfunction P.00-5).

Main Index
Group TOC

Code No. B1051,B1052: Potentiometer system for rear air mixing damper <Vehicles for Hong Kong and Singapore (vehicles with dual automatic A/C)>

Rear Air Mixing Damper Control Motor And Potentiometer Circuit

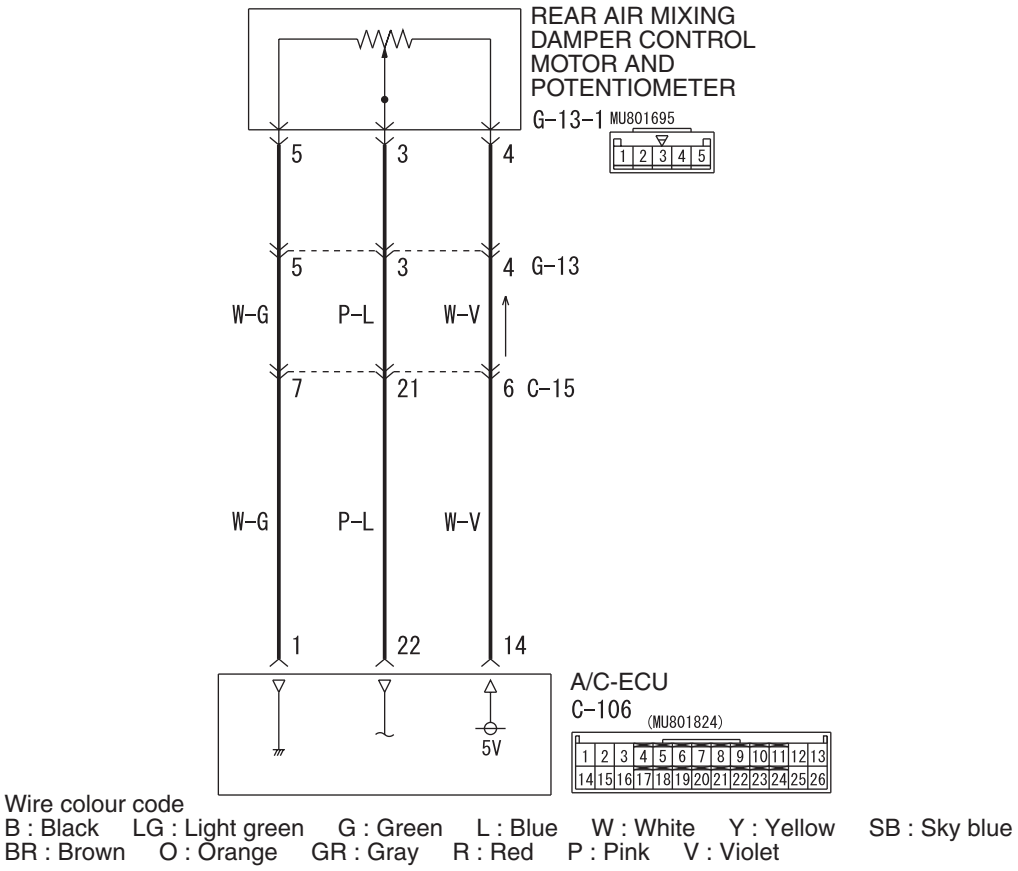

W4X55E038A

COMMENTS ON TROUBLE SYMPTOM

This code is set when the rear air mixing damper control motor potentiometer does not send any signal to the A/C-ECU due to short or open circuit.

PROBABLE CAUSES

- Malfunction of the rear air mixing damper control motor and potentiometer
- Damaged the wiring harness or connectors
- Malfunction of the automatic air conditioner control panel (A/C-ECU)

DIAGNOSIS PROCEDURE

STEP 1. M.U.T.-III data list

Check that the following service data display contents are normal. (Refer to P.55-198.)

- Item 12: R.Air mix potentiometer
- Item 13: R.Air mix potentiometer (Target)

Q: Is the check result normal?

YES : Go to Step 5.
NO : Go to Step 2.

Main Index
Group TOC

STEP 2. Connector check: C-106 A/C-ECU connector and G-13-1 rear air mixing damper control motor and potentiometer connector

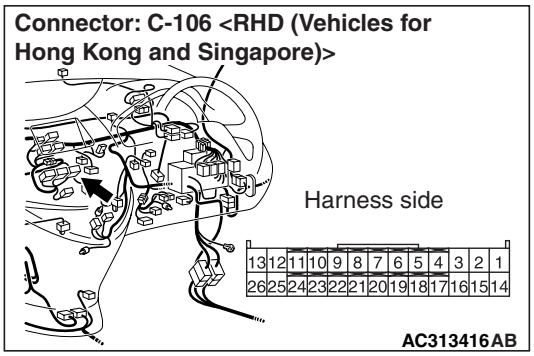

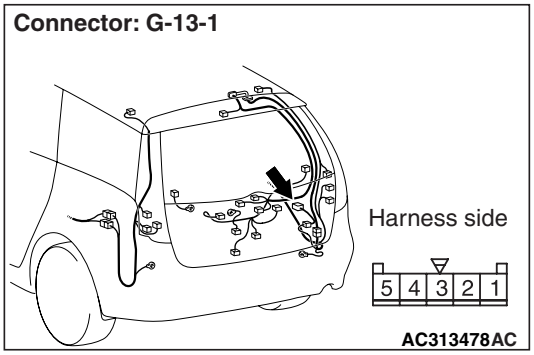

Q: Is the check result normal?
YES : Go to Step 3.
NO : Repair the connector.

STEP 3. Check the wiring harness between C-106 A/C-ECU connector (terminals 14, 22 and 1) and G-13-1 rear air mixing damper control motor and potentiometer connector (terminals 4, 3 and 5).

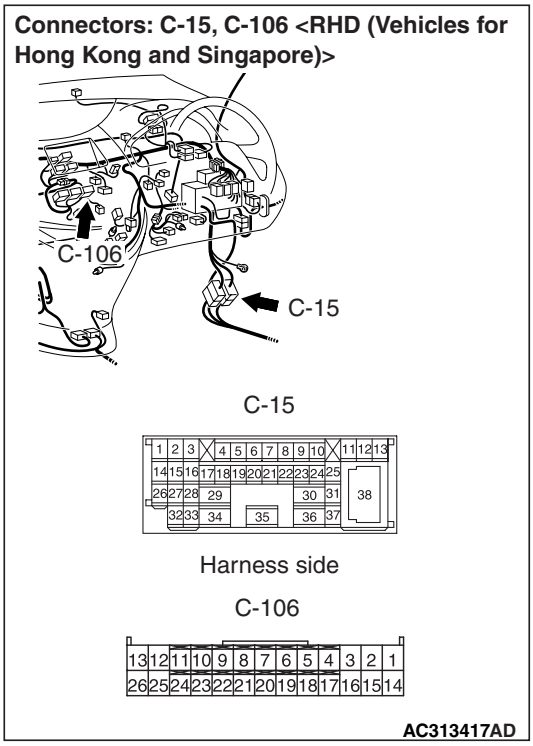

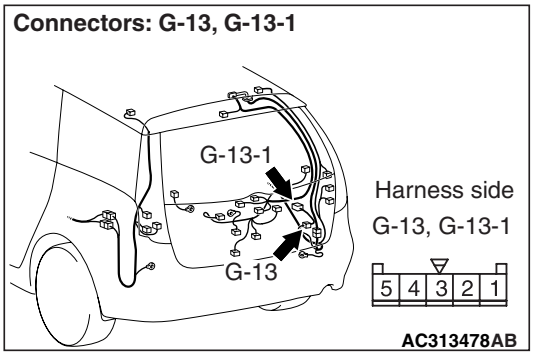

NOTE: Prior to the wiring harness inspection, check intermediate connector G-13 and C-15, and repair if necessary.

- Check the potentiometer power supply, earth and signal line for open or short circuit.

Q: Is the check result normal?
YES : Go to Step 4.
NO : Repair the wiring harness.

STEP 4. Check the rear air mixing damper control motor and potentiometer.
Refer to P.55-232.

Q: Is the check result normal?
YES : Go to Step 5.
NO : Replace the rear air mixing damper control motor and potentiometer.

Main Index
Group TOC

STEP 5. M.U.T.-III diagnosis code

Q: Is the diagnosis code set?

YES : Replace the automatic air conditioner control panel (A/C-ECU).

NO : The trouble can be an intermittent malfunction (Refer to GROUP 00, How to Cope with Intermittent Malfunction P.00-5).

Code No.B1055 Motor drive system for Rear Air Mixing Damper <Vehicles with dual automatic A/C>

Rear Air Mixing Damper Control Motor And Potentiometer Circuit

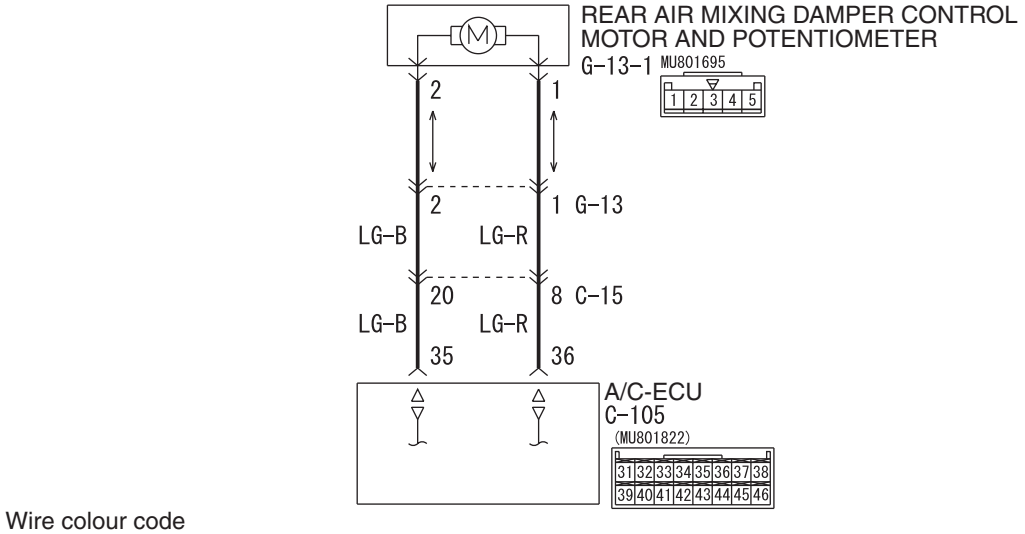

Wire colour code
B : Black LG : Light green G : Green L : Blue W : White Y : Yellow SB : Sky blue
BR : Brown O : Orange GR : Gray R : Red P : Pink V : Violet

W4X55E35AA

COMMENTS ON TROUBLE SYMPTOM

This code is set when the rear air mixing damper cannot be rotated to the preset opening angle.

POSSIBLE CAUSES

- Malfunction of the rear air mixing damper control motor and potentiometer
- Malfunction of the automatic air conditioner control panel (A/C-ECU)
- Damaged the wiring harness or connectors

DIAGNOSIS PROCESURE

STEP 1. M.U.T.-III actuator test

Check that the following actuator test can be executed normally. (Refer to P.55-201.)

- Item 13: R.Air mix dumper motor: 0%
- Item 14: R.Air mix dumper motor: 50%
- Item 15: R.Air mix dumper motor: 100%

Q: Is the check result normal?

YES : Go to Step 5.

NO : Go to Step 2.

Main Index
Group TOC

STEP 2. Connector check: C-105 A/C-ECU connector and G-13-1 rear air mixing damper control motor and potentiometer connector

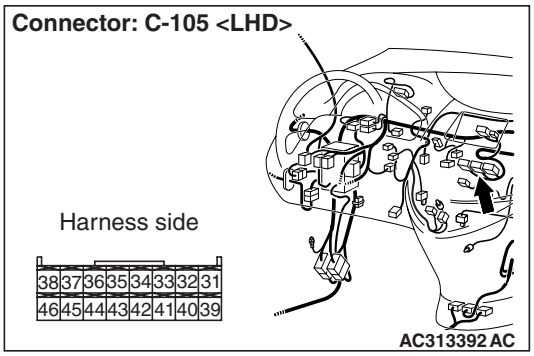

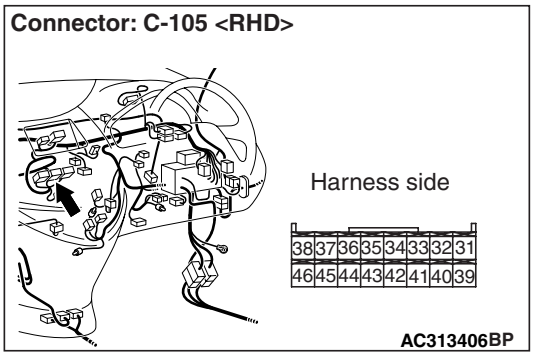

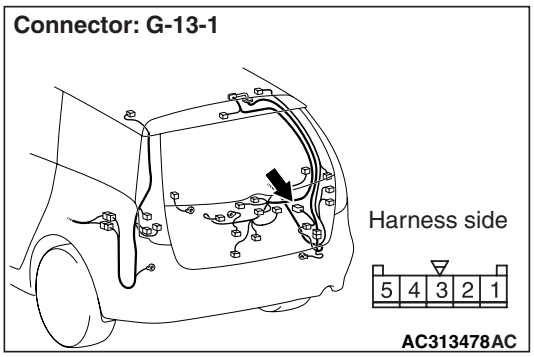

Q: Is the check result normal?
YES : Go to Step 3.
NO : Repair the connector.

STEP 3. Check the wiring harness between C-105 A/C-ECU connector (terminals 35 and 36) and G-13-1 rear air mixing damper control motor and potentiometer connector (terminals 2 and 1).

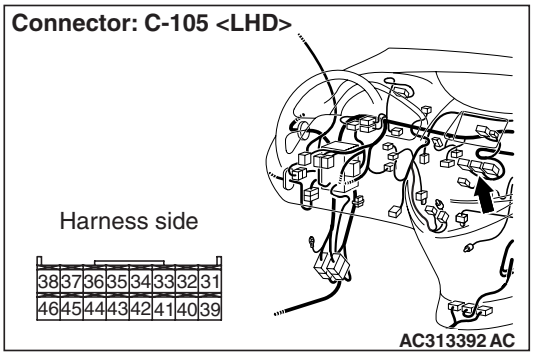

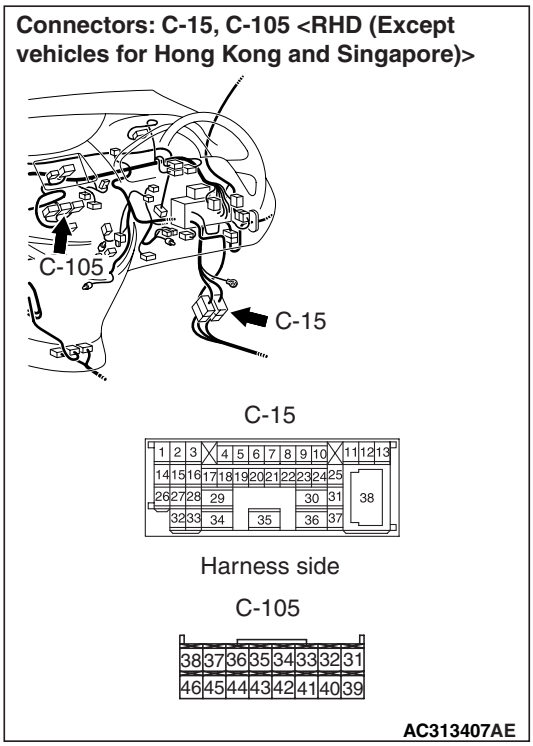

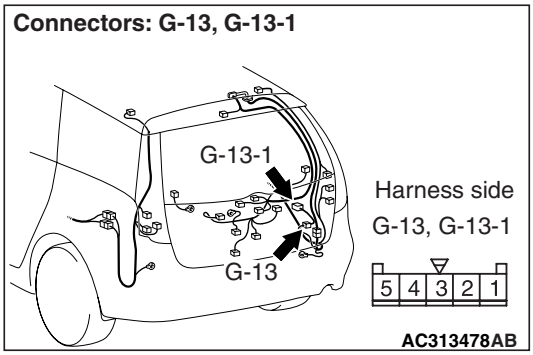

Main Index
Group TOC

NOTE:

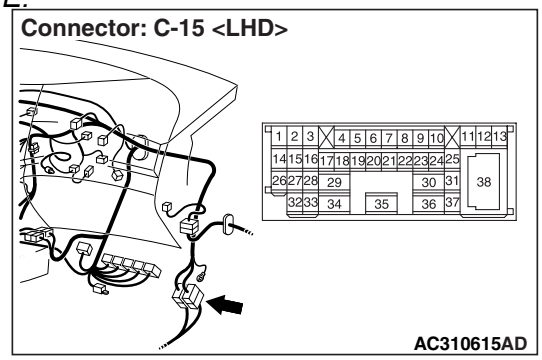

Prior to the wiring harness inspection, check intermediate connector C-15 and G-13, and repair if necessary.

- Check the motor activating lines for open or short circuit.

Q: Is the check result normal?
YES : Go to Step 4.
NO : Repair the wiring harness.

STEP 4. Check the rear air mixing damper control motor and potentiometer.
Refer to P.55-232.

Q: Is the check result normal?
YES : Go to Step 5.
NO : Replace the air mixing damper control motor and potentiometer.

STEP 5. M.U.T.-III diagnosis code

Q: Is the diagnosis code set?
YES : Replace the automatic air conditioner control panel (A/C-ECU).
NO : The trouble can be an intermittent malfunction (Refer to GROUP 00, How to Cope with Intermittent Malfunction P.00-5)

Code No. B1061,B1062: Potentiometer system for air outlet changeover damper <Except Vehicles for Hong Kong and Singapore>

Mode Selection Damper Control Motor And Potentiometer Circuit

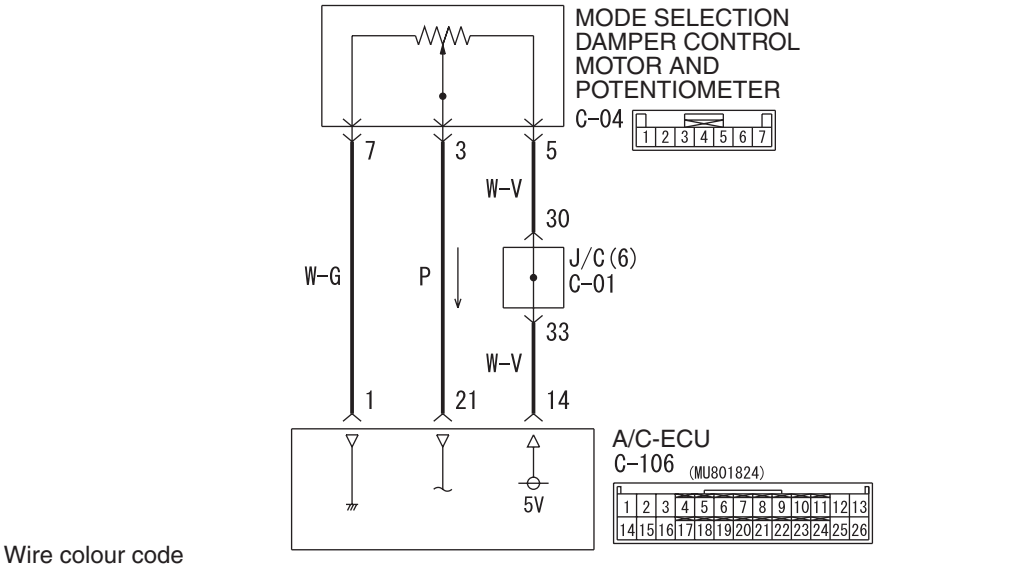

Wire colour code
B : Black LG : Light green G : Green L : Blue W : White Y : Yellow SB : Sky blue
BR : Brown O : Orange GR : Gray R : Red P : Pink V : Violet

W4X55E01AA

COMMENTS ON TROUBLE SYMPTOM

This code is set when the mode selection damper control motor potentiometer does not send any signal to the A/C-ECU due to short or open circuit.

PROBABLE CAUSES

- Malfunction of the mode selection damper control motor and potentiometer
- Damaged the wiring harness or connectors

Main Index
Group TOC

- Malfunction of the automatic air conditioner control panel (A/C-ECU)

DIAGNOSIS PROCEDURE

STEP 1. M.U.T.-III data list

Check that the following service data display contents are normal. (Refer to P.55-198.)

- Item 14: F.Air outlet c/o potentiometer
- Item 15: F.Air outlet c/o potentiometer (Target)

Q: Is the check result normal?

YES : Go to Step 5.
NO : Go to Step 2.

STEP 2. Connector check: C-106 A/C-ECU connector and C-04 mode selection damper control motor and potentiometer connector

Connectors: C-04, C-106 <LHD>

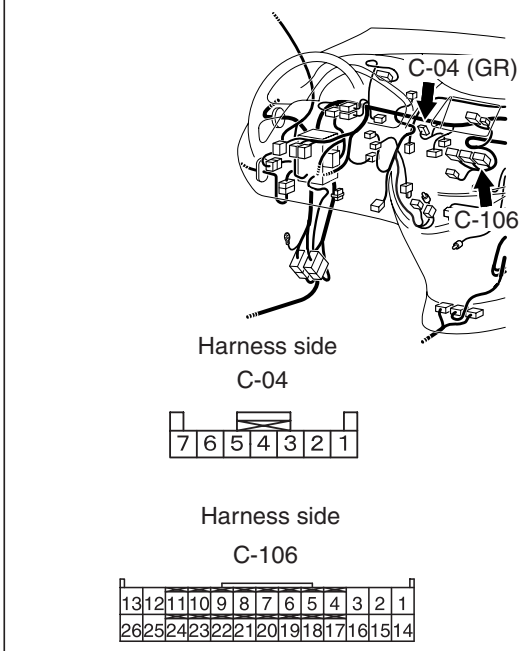

AC313393 AF

Connectors: C-04, C-106 <RHD (Except vehicles for Hong Kong and Singapore)>

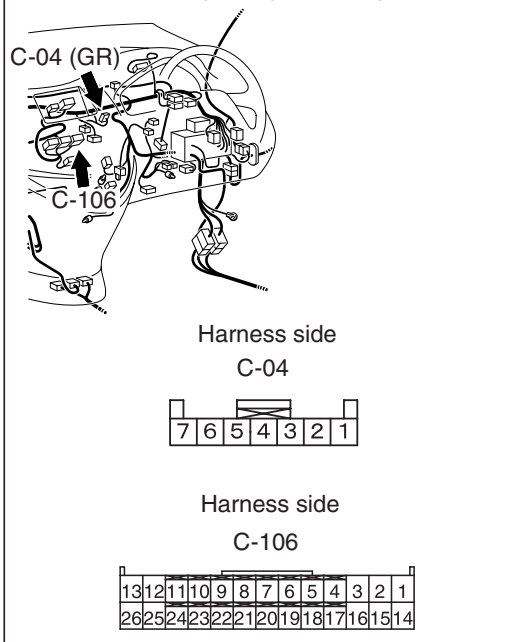

AC313407 BD

Q: Is the check result normal?

YES : Go to Step 3.
NO : Repair the connector.

Main Index
Group TOC

STEP 3. Check the wiring harness between C-106 A/C-ECU connector (terminals 1, 21 and 14) and C-04 mode selection damper control motor and potentiometer connector (terminals 7, 3 and 5).

Connectors: C-01, C-04, C-106 <LHD>

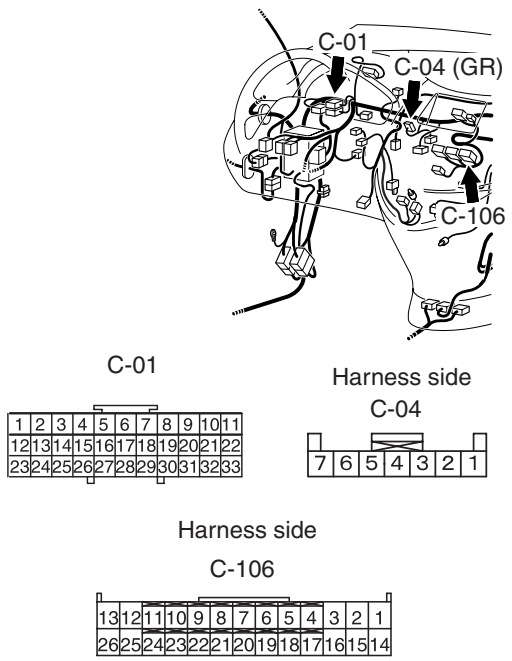

Connectors: C-01, C-04, C-106 <RHD (Except vehicles for Hong Kong and Singapore)>

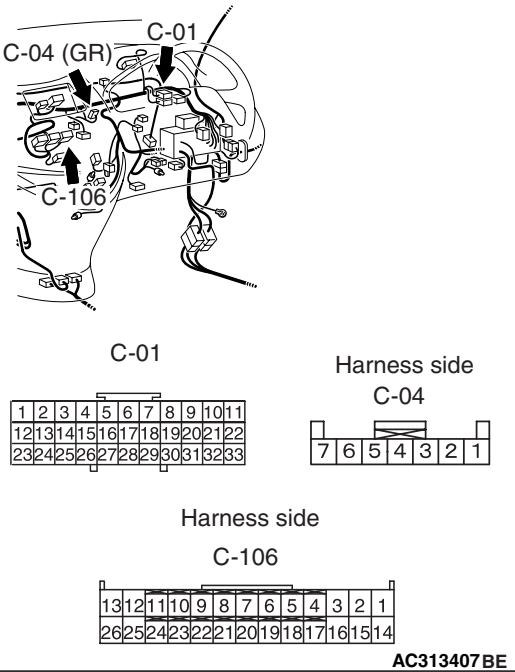

NOTE: Prior to the wiring harness inspection, check joint connector C-01, and repair if necessary.

- Check the potentiometer power supply, earth and signal line for open or short circuit.

Q: Is the check result normal?
YES : Go to Step 4.
NO : Repair the wiring harness.

STEP 4. Check the mode selection damper control motor and potentiometer.
Refer to P.55-223.

Q: Is the check result normal?
YES : Go to Step 5.
NO : Replace the mode selection damper control motor and potentiometer.

STEP 5. M.U.T.-III diagnosis code

Q: Is the diagnosis code set?
YES : Replace the automatic air conditioner control panel (A/C-ECU).
NO : The trouble can be an intermittent malfunction (Refer to GROUP 00, How to Cope with Intermittent Malfunction P.00-5)

Main Index
Group TOC

Code No. B1061,B1062: Potentiometer system for air outlet changeover damper <Vehicles for Hong Kong and Singapore>

Mode Selection Damper Control Motor And Potentiometer Circuit

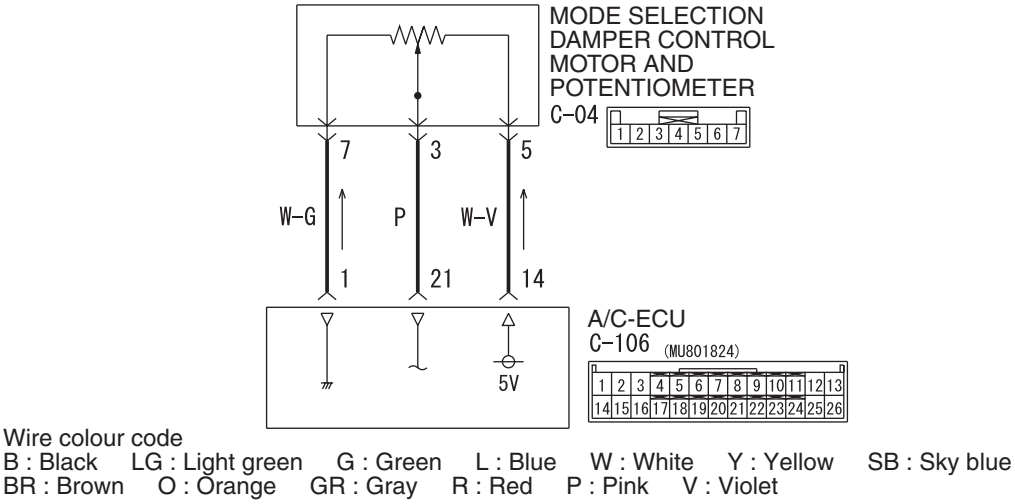

W4X55E00AA

COMMENTS ON TROUBLE SYMPTOM

This code is set when the mode selection damper control motor potentiometer does not send any signal to the A/C-ECU due to short or open circuit.

PROBABLE CAUSES

- Malfunction of the mode selection damper control motor and potentiometer
- Damaged the wiring harness or connectors
- Malfunction of the automatic air conditioner control panel (A/C-ECU)

DIAGNOSIS PROCEDURE

STEP 1. M.U.T.-III data list

Check that the following service data display contents are normal. (Refer to P.55-198.)

- Item 14: F.Air outlet c/o potentiometer
- Item 15: F.Air outlet c/o potentiometer (Target)

Q: Is the check result normal?

YES : Go to Step 5.
NO : Go to Step 2.

STEP 2. Connector check: C-106 A/C-ECU connector and C-04 mode selection damper control motor and potentiometer connector

Connectors: C-04, C-106 <RHD (Vehicles for Hong Kong and Singapore)>

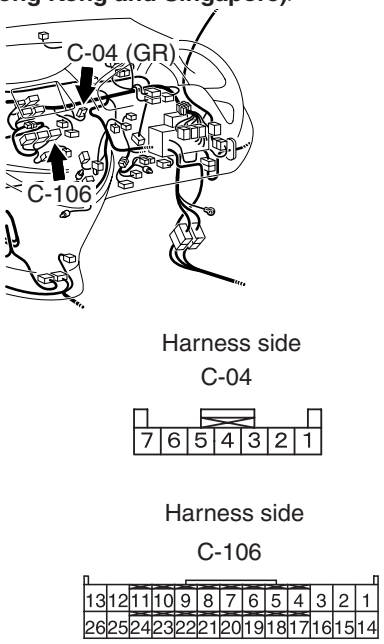

AC313417AF

Q: Is the check result normal?

YES : Go to Step 3.
NO : Repair the connector.

Main Index
Group TOC

STEP 3. Check the wiring harness between C-106 A/C-ECU connector (terminals 1, 21 and 14) and C-04 mode selection damper control motor and potentiometer connector (terminals 7, 3 and 5).

Connectors: C-04, C-106 <RHD (Vehicles for Hong Kong and Singapore)>

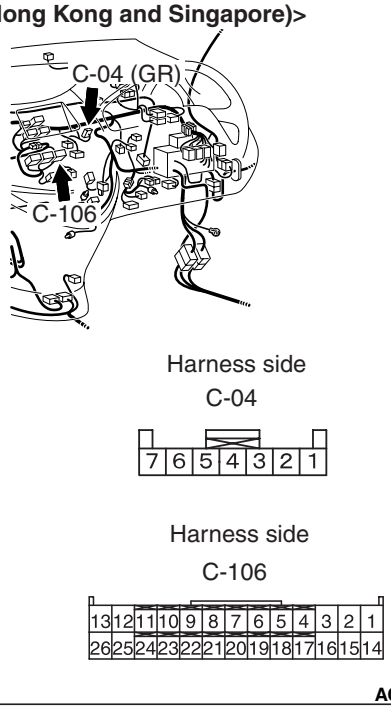

AC313417AF

- Check the potentiometer power supply, earth and signal line for open or short circuit.

Q: Is the check result normal?
YES : Go to Step 4.
NO : Repair the wiring harness.

STEP 4. Check the mode selection damper control motor and potentiometer.
Refer to P.55-223.

Q: Is the check result normal?
YES : Go to Step 5.
NO : Replace the mode selection damper control motor and potentiometer.

STEP 5. M.U.T.-III diagnosis code

Q: Is the diagnosis code set?
YES : Replace the automatic air conditioner control panel (A/C-ECU).
NO : The trouble can be an intermittent malfunction (Refer to GROUP 00, How to Cope with Intermittent Malfunction P.00-5).

Main Index
Group TOC

Code No. B1065: Motor drive system for air outlet switching damper

Mode Selection Damper Control Motor And Potentiometer Circuit

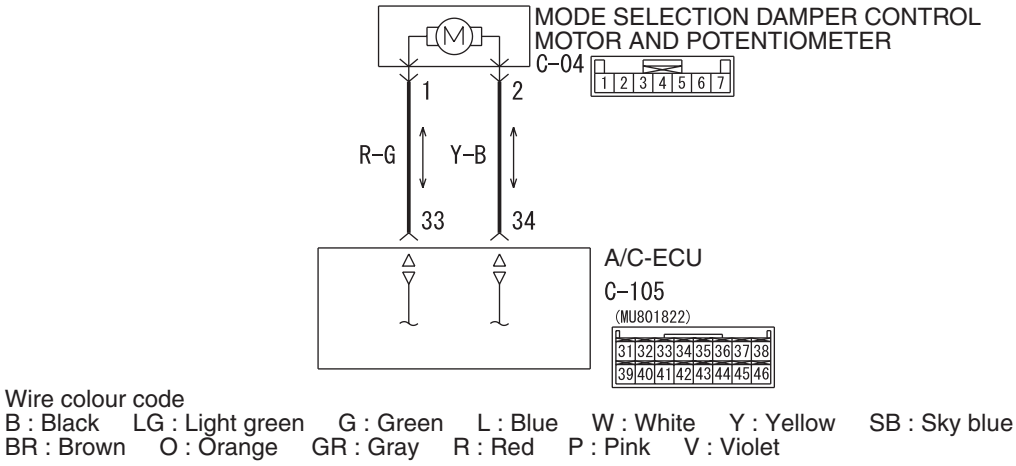

COMMENTS ON TROUBLE SYMPTOM

This code is set when the mode selection damper cannot be rotated to the preset opening angle.

POSSIBLE CAUSES

- Malfunction of the rear mode selection damper control motor and potentiometer
- Malfunction of the automatic air conditioner control panel (A/C-ECU)
- Damaged the wiring harness or connectors

DIAGNOSIS PROCESURE

STEP 1. M.U.T.-III actuator test

Check that the following actuator test can be executed normally.(Refer to P.55-201.)

- Item 20: Air outlet c/o dumper: FACE
- Item 21: Air outlet c/o dumper: Bi-Level
- Item 22: Air outlet c/o dumper: FOOT
- Item 23: Air outlet c/o dumper: DEF/FOOT
- Item 24: Air outlet c/o dumper: DEF

Q: Is the check result normal?

YES : Go to Step 5.
NO : Go to Step 2.

STEP 2. Connector check: C-105 A/C-ECU connector and C-04 rear mode selection damper control motor and potentiometer connector

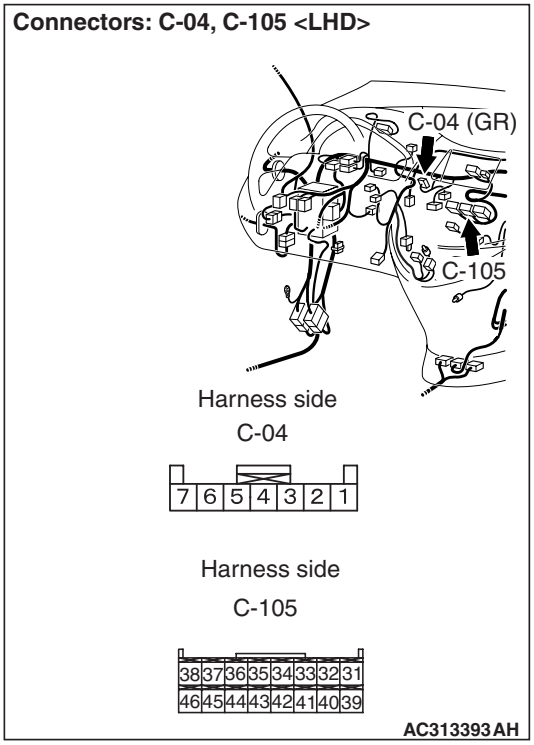

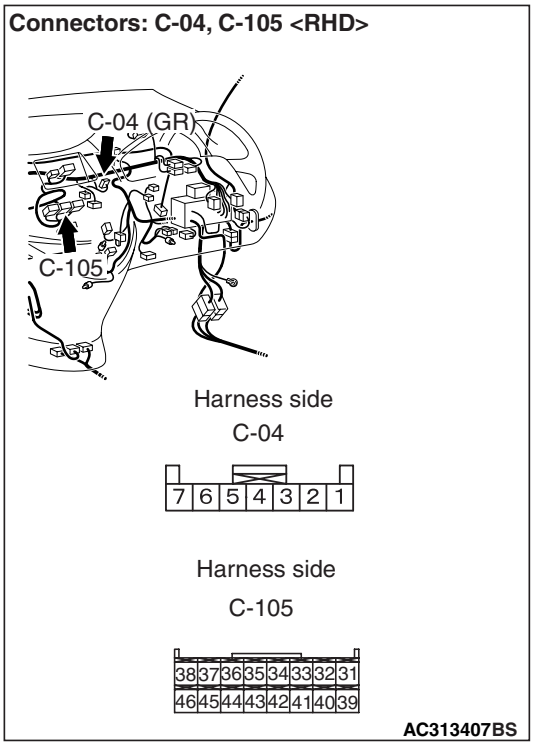

Q: Is the check result normal?
YES : Go to Step 3.
NO : Repair the connector.

STEP 3. Check the wiring harness between C-105 A/C-ECU connector (terminals 33 and 34) and C-04 rear mode selection damper control motor and potentiometer connector (terminals 1 and 2).

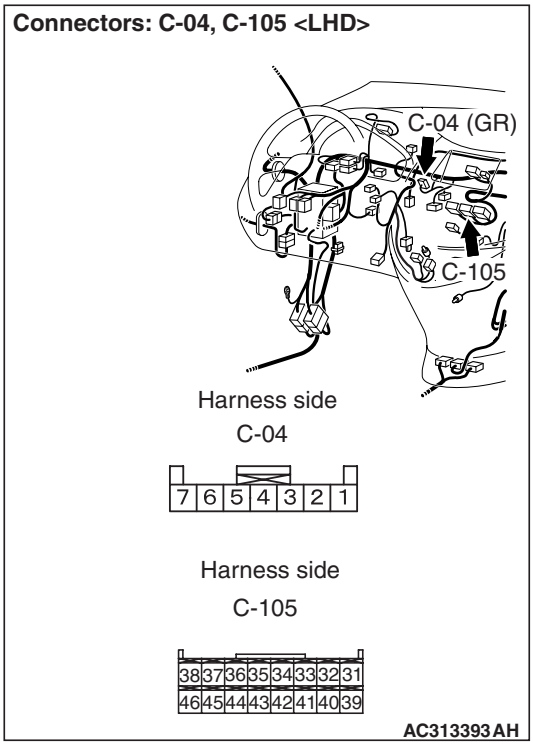

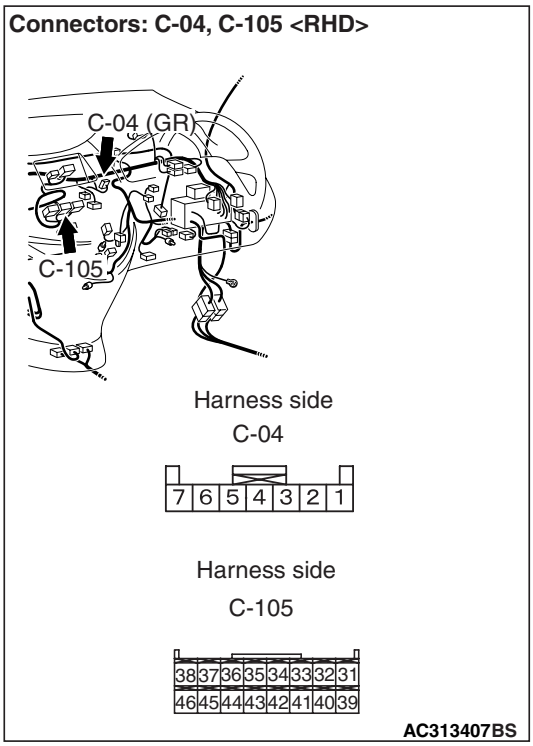

- Check the motor activating lines for open or short circuit.

Q: Is the check result normal?
YES : Go to Step 4.
NO : Repair the wiring harness.

Main Index
Group TOC

STEP 4. Check the rear mode selection damper control motor and potentiometer.
Refer to P.55-223.

Q: Is the check result normal?
YES : Go to Step 5.
NO : Replace the mode selection damper control motor and potentiometer.

STEP 5. M.U.T.-III diagnosis code

Q: Is the diagnosis code set?
YES : Replace the automatic air conditioner control panel (A/C-ECU).
NO : The trouble can be an intermittent malfunction (Refer to GROUP 00, How to Cope with Intermittent Malfunction P.00-5).

Code No.U1073: Bus off error

⚠ CAUTION
If diagnosis code No. U1073 is set in the A/C-ECU, diagnose the CAN main bus line.

⚠ CAUTION
Whenever the ECU is replaced, ensure that the communication circuit is normal.

TROUBLE JUDGMENT

If the A/C-ECU ceases communicating once (i.e. bus off) and then returns to it, the combination meter will not communicate for three minutes immediately after that point. This three-minute period is called "Penalty mode." Immediately after the combination meter returns to communication, the diagnosis code is set.

COMMENTS ON TROUBLE SYMPTOM

The wiring harness wire or connectors may have loose, corroded, or damage terminals, or terminals pushed back in the connector, or the A/C-ECU may be defective.

PROBABLE CAUSES

- Damaged harness wires and connectors
- Malfunction of the A/C-ECU

DIAGNOSIS PROCEDURE

STEP 1. M.U.T.-III CAN bus diagnostics
Use the M.U.T.-III to diagnose the CAN bus lines.

Q: Is the check result normal?
YES : Go to Step 2
NO : Repair the CAN bus lines. (Refer to GROUP 54F – Troubleshooting P.54F-13.) On completion, go to Step 3.

STEP 2. M.U.T.-III diagnosis code.
Recheck if the diagnosis code is set.
(1) Erase the diagnosis code.
(2) Ignition switch: LOCK (OFF) to ON
(3) Check if the diagnosis code is set.

Q: Is the diagnosis code set?
YES : Replace the A/C-ECU, and then go to Step 3 .
NO : If a trouble is solved, it is determined that there is an intermittent malfunction such as poor engaged connector(s) or open circuit. (Refer to GROUP 00, How to Cope with Intermittent Malfunction P.00-5).

STEP 3. M.U.T.-III diagnosis code
Recheck if the diagnosis code is set.
(1) Erase the diagnosis code.
(2) Ignition switch: LOCK (OFF) to ON
(3) Check if the diagnosis code is set.

Q: Is the diagnosis code set?
YES : Return to Step 1.
NO : The procedure is complete.

Code No.U1100: Engine CAN communication time-out

⚠ CAUTION
If diagnosis code No. U1100 is set in the A/C-ECU, diagnose the CAN main bus line.

⚠ CAUTION
Whenever the ECU is replaced, ensure that the communication circuit is normal.

TROUBLE JUDGMENT

U1100
- A/C-ECU receives engine control system-related signals from the engine-ECU <M/T> or the engine-A/T-ECU <A/T> via CAN bus lines. If the display unit can not receive the necessary signals, diagnosis code U1100 will be set.

COMMENTS ON TROUBLE SYMPTOM

Current trouble
- Connector(s) or wiring harness in the CAN bus lines between the engine-ECU <M/T>, engine-A/T-ECU <A/T> and the A/C-ECU, the power supply system to the engine-A/T-ECU, the A/C-ECU, the engine-ECU <M/T> or the engine-A/T-ECU <A/T> may be defective.

Past trouble
- Carry out diagnosis with particular emphasis on connector(s) or wiring harness in the CAN bus lines between the engine-ECU <M/T>, engine-A/T-ECU <A/T> and the A/C-ECU, the power supply system to the engine-ECU <M/T> or the engine-A/C-ECU <A/T>. For diagnosis procedures, refer to "How to cope with past trouble" (Refer to GROUP 00– How to Use Troubleshooting/Inspection Service Points P.00-5).

NOTE: For a past trouble, you can not find it by the M.U.T.-III CAN bus diagnostics even if there is any failure in CAN bus lines. In this case, refer to GROUP 00, How to Cope with Intermittent Malfunctions P.00-5 and check the CAN bus lines. You can narrow down the possible cause of the trouble by referring to the diagnosis code, which is set regarding the CAN communication-linked ECUs (Refer to GROUP 54F, Explanation about the M.U.T.-III CAN bus diagnostics P.54F-7).

⚠ CAUTION
If the ignition switch is turned to the ON position without starting the engine, the diagnosis code U1100 (past trouble) may be set to the A/C-ECU after three minutes.

PROBABLE CAUSES
- Damaged harness wires and connectors
- Malfunction of engine-ECU <M/T> or engine-A/T-ECU <A/T>
- Malfunction of the A/C-ECU

DIAGNOSIS PROCEDURE

STEP 1. M.U.T.-III CAN bus diagnostics
Use the M.U.T.-III to diagnose the CAN bus lines.

Q: Is the check result normal?
YES : Go to Step 2.
NO : Repair the CAN bus lines. (Refer to GROUP 54F, Troubleshooting P.54F-13.) Repair the CAN bus line and then go to Step 6.

STEP 2. M.U.T.-III other system diagnosis code
Check whether the engine-related diagnosis code is set.

Q: Is the diagnosis code set?
YES : Diagnose the engine control system. Refer to GROUP 13A – Troubleshooting P.13A-14 <Except vehicles for Hong Kong, Singapore, Australia and New Zealand>, GROUP 13B – Troubleshooting P.13B-15 <Vehicles for Hong Kong and Singapore> or GROUP 13C – Troubleshooting P.13C-21 <Vehicles for Australia and New Zealand>.
NO : Go to Step 3.

STEP 3. M.U.T.-III other system diagnosis code
Check if a diagnosis code, which relates to CAN communication-linked systems below, is set.
- Combination meter

U1100: Engine-related time-out diagnosis code
- Multi-centre display

U1100: Engine-related time-out diagnosis code
- ETACS

011 or 012: diagnosis code of engine-related time-out

Q: Is the diagnosis code set?
YES : Go to Step 4.
NO : Go to Step 5.

STEP 4. Check whether the diagnosis code is reset.
Recheck if the diagnosis code is set.
(1) Erase the diagnosis code.
(2) Ignition switch: LOCK (OFF) to ON

Main Index
Group TOC

(3) Check if the diagnosis code is set.

Q: Is the diagnosis code set?
YES : Replace the engine-ECU <M/T> or the engine-A/T-ECU <A/T>, go to Step 6.
NO : A poor connection, open circuit or other intermittent malfunction is present in the CAN bus lines between the engine-ECU <M/T> or the engine-A/T-ECU <A/T> and the A/C-ECU. (Refer to GROUP 00, How to Cope with Intermittent Malfunction P.00-5.)

STEP 5. Check whether the diagnosis code is reset.
Recheck if the diagnosis code is set.
(1) Erase the diagnosis code.
(2) Ignition switch: LOCK (OFF) to ON
(3) Check if the diagnosis code is set.

Q: Is the diagnosis code set?
YES : Replace the A/C-ECU, and then go to Step 6.
NO : A poor connection, open circuit or other intermittent malfunction is present in the CAN bus lines between the engine-ECU <M/T> or the engine-A/T-ECU <A/T> and the A/C-ECU. (Refer to GROUP 00, How to Cope with Intermittent Malfunction P.00-5.)

STEP 6. Check whether the diagnosis code is reset.
Recheck if the diagnosis code is set.
(1) Erase the diagnosis code.
(2) Ignition switch: LOCK (OFF) to ON
(3) Check if the diagnosis code is set.

Q: Is the diagnosis code set?
YES : Return to Step 1.
NO : The procedure is complete.

Code No.U1109: ETACS related CAN communication time-out

⚠ CAUTION
If diagnosis code No. U1109 is set in the A/C-ECU, diagnose the CAN main bus line.

⚠ CAUTION
Whenever the ECU is replaced, ensure that the communication circuit is normal.

TROUBLE JUDGMENT

The A/C-ECU receives air conditioner operation-related signal from the ETACS-ECU via the CAN bus lines. If the A/C-ECU can not receive the air conditioner operation-related signal at all on the ETACS-ECU, diagnosis code No.U1109 will be set.

COMMENTS ON TROUBLE SYMPTOM

Current trouble
- Connector(s) or wiring harness in the CAN bus lines between the ETACS-ECU and the A/C-ECU, the power supply system to the ETACS-ECU, the ETACS-ECU itself, or the A/C-ECU may be defective.

Past trouble
- Carry out diagnosis with particular emphasis on connector(s) or wiring harness in the CAN bus lines between the ETACS-ECU and the A/C-ECU, and the power supply system to the ETACS-ECU. For diagnosis procedures, refer to "How to cope with past trouble" (Refer to GROUP 00– How to Use Troubleshooting/Inspection Service Points P.00-5).

NOTE: For a past trouble, you can not find it by the M.U.T.-III CAN bus diagnostics even if there is any failure in CAN bus lines. In this case, refer to GROUP 00 – How to Cope with Intermittent Malfunctions P.00-5 and check the CAN bus lines. You can narrow down the possible cause of the trouble by referring to the diagnosis code, which is set regarding the CAN communication-linked ECUs (Refer to GROUP 54F, Explanation about the M.U.T.-III CAN bus diagnostics P.54F-7).

⚠ CAUTION
If the ignition switch is turned to the ON position without starting the engine, the diagnosis code U1109 (past trouble) may be set to the A/C-ECU after three minutes.

PROBABLE CAUSES

- Damaged harness wires and connectors
- Malfunction of ETACS-ECU
- Malfunction of the A/C-ECU

Main Index
Group TOC

DIAGNOSIS PROCEDURE

STEP 1. M.U.T.-III CAN bus diagnostics
Use the M.U.T.-III to diagnose the CAN bus lines.

Q: Is the check result normal?
YES : Go to Step 2
NO : Repair the CAN bus lines. (Refer to GROUP 54F, Troubleshooting P.54F-13.) On completion, go to Step 6.

STEP 2. M.U.T.-III other system diagnosis code
Check whether the ETACS-related diagnosis code is set.

Q: Is the diagnosis code set?
YES : Diagnose the ETACS-ECU. Refer to P.54B-26 <Except vehicles for Hong kong and Singapore> or P.54D-28 <Vehicles for Hong kong and Singapore>.
NO : Go to Step 3

STEP 3. M.U.T.-III other system diagnosis code
Check if a diagnosis code, which relates to CAN communication-linked systems below, is set.
- combination meter

U1109: ETACS-related time-out diagnosis code

Q: Is the diagnosis code set?
YES : Go to Step 4
NO : Go to Step 5

STEP 4. Check whether the diagnosis code is reset.
Recheck if the diagnosis code is set.
(1) Erase the diagnosis code.
(2) Ignition switch: LOCK (OFF) to ON
(3) Check if the diagnosis code is set.

Q: Is the diagnosis code set?
YES : Replace the ETACS-ECU, and then go to Step 6.
NO : A poor connection, open circuit or other intermittent malfunction in the CAN bus line between the ETACS-ECU and the A/C-ECU. (Refer to GROUP 00 – How to Cope with Intermittent Malfunction P.00-5.)

STEP 5. Check whether the diagnosis code is reset.
Recheck if the diagnosis code is set.
(1) Erase the diagnosis code.
(2) Ignition switch: LOCK (OFF) to ON
(3) Check if the diagnosis code is set.

Q: Is the diagnosis code set?
YES : Replace the A/C-ECU, and then go to Step 6.
NO : A poor connection, open circuit or other intermittent malfunction in the CAN bus line between the ETACS-ECU and the A/C-ECU. (Refer to GROUP 00 – How to Cope with Intermittent Malfunction P.00-5.)

STEP 6. Check whether the diagnosis code is reset.
Recheck if the diagnosis code is set.
(1) Erase the diagnosis code.
(2) Ignition switch: LOCK (OFF) to ON
(3) Check if the diagnosis code is set.

Q: Is the diagnosis code set?
YES : Return to Step 1.
NO : The procedure is complete.

Code No.U1120: Engine-related CAN communication failure information

⚠ CAUTION
If diagnosis code No. U1120 is set in the A/C-ECU, diagnose the CAN main bus line.

TROUBLE JUDGMENT

The A/C-ECU receives vehicle speed signal from the engine-ECU <M/T> or the engine-A/T-ECU <A/T> via CAN bus lines. If failure information is sent to the vehicle speed signal, diagnosis code U1120 will be set.

COMMENTS ON TROUBLE SYMPTOM

Current trouble
- The vehicle speed sensor, A/C-ECU, engine-ECU <M/T> or engine-A/T-ECU <A/T> may be defective.

Main Index
Group TOC

Past trouble

- Carry out diagnosis with particular emphasis on connector(s) or wiring harness between the engine-ECU <M/T> or engine-A/T-ECU <A/T> and the vehicle speed sensor. For diagnosis procedures, refer to "How to treat past trouble" (Refer to GROUP 00 – How to Use Troubleshooting/Inspection Service Points P.00-5).

PROBABLE CAUSES

- Damaged harness wires and connectors
- Malfunction of the engine-A/T-ECU
- Malfunction of the A/C-ECU

DIAGNOSIS PROCEDURE

STEP 1. M.U.T.-III CAN bus diagnostics

Use the M.U.T.-III to diagnose the CAN bus lines.

Q: Is the check result normal?

YES : Go to Step 2.

NO : Repair the CAN bus lines. (Refer to GROUP 54F, Troubleshooting P.54F-13.) On completion, go to Step 6.

STEP 2. M.U.T.-III other system diagnosis code

Check whether the engine-related diagnosis code is set.

Q: Is the diagnosis code set?

YES : Diagnose the engine control system. Refer to GROUP 13A – Troubleshooting P.13A-14 <Except vehicles for Hong Kong, Singapore, Australia and New Zealand>, GROUP 13B – Troubleshooting P.13B-15 <Vehicles for Hong Kong and Singapore> or GROUP 13C – Troubleshooting P.13C-21 <Vehicles for Australia and New Zealand>.

NO : Go to Step 3.

STEP 3. M.U.T.-III other system diagnosis code

Check if a diagnosis code, which relates to CAN communication-linked systems below, is set.

- Combination meter

U1120: Diagnosis code of engine-related failure information

Q: Is the diagnosis code set?

YES : Go to Step 4.

NO : Go to Step 5.

STEP 4. M.U.T.-III diagnosis code

Recheck if the diagnosis code is set.

(1) Erase the diagnosis code.
(2) Ignition switch: LOCK (OFF) to ON
(3) Check if the diagnosis code is set.

Q: Is the diagnosis code set?

YES : Replace the engine-ECU <M/T> or the engine-A/T-ECU <A/T>, go to Step 6.

NO : A poor connection, open circuit or other intermittent malfunction between the engine-ECU <M/T> or the engine-A/T-ECU <A/T> and the vehicle speed sensor. (Refer to GROUP 00, How to Cope with Intermittent Malfunction P.00-5.)

STEP 5. M.U.T.-III diagnosis code

Recheck if the diagnosis code is set.

(1) Erase the diagnosis code.
(2) Ignition switch: LOCK (OFF) to ON
(3) Check if the diagnosis code is set.

Q: Is the diagnosis code set?

YES : Replace the A/C-ECU, and then go to Step 6.

NO : A poor connection, open circuit or other intermittent malfunction between the engine-A/T-ECU <A/T> and the vehicle speed sensor. (Refer to GROUP 00, How to Cope with Intermittent Malfunction P.00-5.)

STEP 6. M.U.T.-III diagnosis code

Recheck if the diagnosis code is set.

(1) Erase the diagnosis code.
(2) Ignition switch: LOCK (OFF) to ON
(3) Check if the diagnosis code is set.

Q: Is the diagnosis code set?

YES : Return to Step 1.

NO : The procedure is complete.

Main Index
Group TOC

TROUBLE SYMPTOM CHART

M1554005000548

Trouble symptom	Inspection procedure number	Reference page
Communication with the M.U.T.-III is not possible.	1	P.55-49
Cool air does not come	2	P.55-51
The front blower does not work	3	P.55-52
The blower air volume cannot be changed	4	P.55-62
The inside/outside air changeover is impossible <Except vehicles for Hong Kong and Singapore>	5	P.55-66
The inside/outside air changeover is impossible <Vehicles for Hong Kong and Singapore>	6	P.55-70
The compressor does not work <Except vehicles for Hong Kong and Singapore>	7	P.55-73
The compressor does not work <Vehicles for Hong Kong and Singapore)>	8	P.55-81
The outlet air temperature can not be changed even if the amount of solar radiation changes <Except vehicles for Hong Kong and Singapore>	9	P.55-87
The outlet air temperature can not be changed even if the amount of solar radiation changes <Vehicles for Hong Kong and Singapore>	10	P.55-89
The PTC heater does not work <Except vehicles for Hong Kong and Singapore>	11	P.55-91
The PTC heater does not work <Vehicles for Hong Kong and Singapore>	12	P.55-107
The rear window defogger does not work	13	P.55-118
The A/C indicator flashes	14	P.55-126
Rear blower does not work <Vehicle with rear heater or rear cooler>	15	P.55-127
Rear blower does not work <vehicles with dual automatic A/C>	16	P.55-132
Air volume of rear blower cannot be changed	17	P.55-137
The temperature of rear air conditioner cannot be controlled <Except vehicles for Hong Kong and Singapore (Vehicles with dual automatic A/C)>	18	P.55-140
The temperature of rear air conditioner cannot be controlled <Vehicles for Hong Kong and Singapore (Vehicles with dual automatic A/C)>	19	P.55-144
A/C pressure sensor system <Except vehicles for Hong Kong and Singapore>	20	P.55-147
A/C pressure sensor system <Vehicles for Hong Kong and Singapore>	21	P.55-150
Rear fan switch system <Except vehicles for Hong Kong and Singapore>	22	P.55-152
Rear fan switch system <Vehicles for Hong Kong and Singapore>	23	P.55-156
Rear blower motor power supply system <Except vehicles for Hong Kong and Singapore>	24	P.55-160
Rear blower motor power supply system <Vehicles for Hong Kong and Singapore>	25	P.55-171
PTC heater switch system <Except vehicles for Hong Kong and Singapore>	26	P.55-179

Main Index
Group TOC

Trouble symptom	Inspection procedure number	Reference page
PTC heater switch system <Vehicles for Hong Kong and Singapore>	27	P.55-183
A/C-ECU power supply system <Except vehicles for Hong Kong and Singapore>	28	P.55-186
A/C-ECU power supply system <Vehicles for Hong Kong and Singapore>	29	P.55-193

Main Index
Group TOC

SYMPTOM PROCEDURES

Inspection Procedure 1: Communication with the M.U.T.-III is not possible.

A/C-ECU CAN-BAS Line Circuit

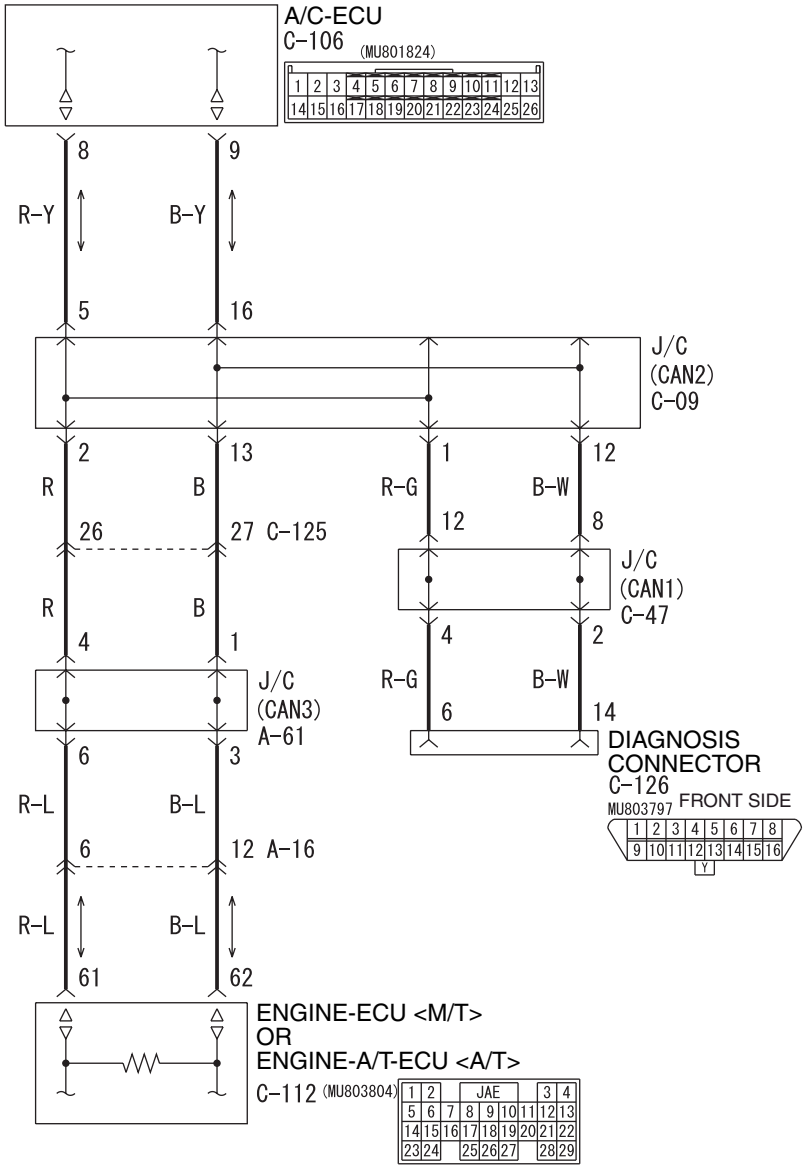

Wire colour code
B : Black LG : Light green G : Green L : Blue W : White Y : Yellow SB : Sky blue
BR : Brown O : Orange GR : Grey R : Red P : Pink V : Violet PU : Purple

W6X55X000A

COMMENTS ON TROUBLE SYMPTOM

If communication with all other systems is not possible, there is a high possibility that there is a malfunction of the diagnosis line. If only the A/C system can not communicate with the M.U.T.-III, the A/C-ECU may be defective.

PROBABLE CAUSES

- Malfunction of the A/C-ECU

Main Index
Group TOC

DIAGNOSIS PROCEDURE

STEP 1. Check that Engine-A/T-ECU communicates with the M.U.T.-III

Use the M.U.T.-III to confirm that it communicates with the engine-A/T-ECU.

Q: Is the check result normal?

YES : Go to Step 2.

NO : Diagnose the MPI system. Refer to GROUP 13A – Troubleshooting P.13A-14 <Except vehicles for Hong Kong, Singapore, Australia and New Zealand>, GROUP 13B – Troubleshooting P.13B-15 <Vehicles for Hong Kong and Singapore> or GROUP 13C – Troubleshooting P.13C-21 <Vehicles for Australia and New Zealand>.

STEP 2. M.U.T.-III CAN bus diagnostics

Use the M.U.T.-III to diagnose the CAN bus lines.

Q: Is the check result normal?

YES <Except vehicles for Hong Kong and Singapore> : INSPECTION PROCEDURE 28: Refer to A/C-ECU power supply system <Except vehicles for Hong Kong and Singapore>P.55-186 .

YES <Vehicles for Hong Kong and Singapore> : INSPECTION PROCEDURE 29: Refer to A/C-ECU power supply system <Vehicles for Hong Kong and Singapore>P.55-193 .

NO : Repair the CAN bus line (Refer to GROUP 54F, Troubleshooting P.54F-13).

Inspection Procedure 2: Cool air does not come

CIRCUIT OPERATION

If the blower air temperature can not be cool when turning A/C switch ON and lowering the preset temperature, inadequate refrigerant quantity, sensors, harness or connectors may be suspected.

PROBABLE CAUSES

- Damaged the wiring harness or connectors

DIAGNOSIS PROCEDURE

STEP 1. Check the blower operation

(1) Turn the ignition switch to the ON position.
(2) Blower knob: Other than OFF
(3) Check that the air comes out of the blower.

Q: Is the check result normal?
YES : Go to Step 2.
NO : Refer to Inspection Procedure 3 "The front blower does not work P.55-52".

STEP 2. Check the A/C compressor operation

Check that the compressor operates under the following conditions.

- Engine operation
- Air conditioner switch: ON
- Temperature control dial: 18°C (MAX COOL)

Q: Is the check result normal?
YES : Go to Step 3.
NO <Except vehicles for Hong Kong and Singapore> : Refer to Inspection Procedure 7 " The compressor does not work <Except vehicles for Hong Kong and Singapore>P.55-73 ".
NO <Vehicles for Hong Kong and Singapore> : Refer to Inspection Procedure 9 " The compressor does not work <Vehicles for Hong Kong and Singapore>P.55-81 ".

STEP 3. M.U.T.-III diagnosis code

Check that the diagnosis code related to the air conditioner is not set.

Q: Is the check result normal?
YES : Go to Step 4.
NO : Carry out the diagnosis code procedures. Refer to P.55-8.

STEP 4. M.U.T.-III data list

Check that the following service data M.U.T.-III display contents are normal. (Refer to P.55-198)

- Item 04: Pressure sensor
- Item 50: Front preset temperature

Q: Is the check result normal?
YES : Go to Step 5.
NO <Item 04 is abnormal> : Inspection Procedure 20: Refer to A/C pressure sensor system P.55-147 or Inspection Procedure 21: Refer to A/C pressure sensor system P.55-150.
NO <Item 50 is abnormal> : Replace the A/C-ECU.

STEP 5. Refrigerant level check

Check that the refrigerant level is adequate. Refer to P.55-206.

Q: Is the check result normal?
YES : Intermittent malfunction. (Refer to GROUP 00, How to Cope with Intermittent Malfunction P.00-5.)
NO : Charge or remove the refrigerant level. Refer to P.55-206.

Main Index
Group TOC

Inspection Procedure 3: The Front Blower does not Work

Blower Motor Circuit

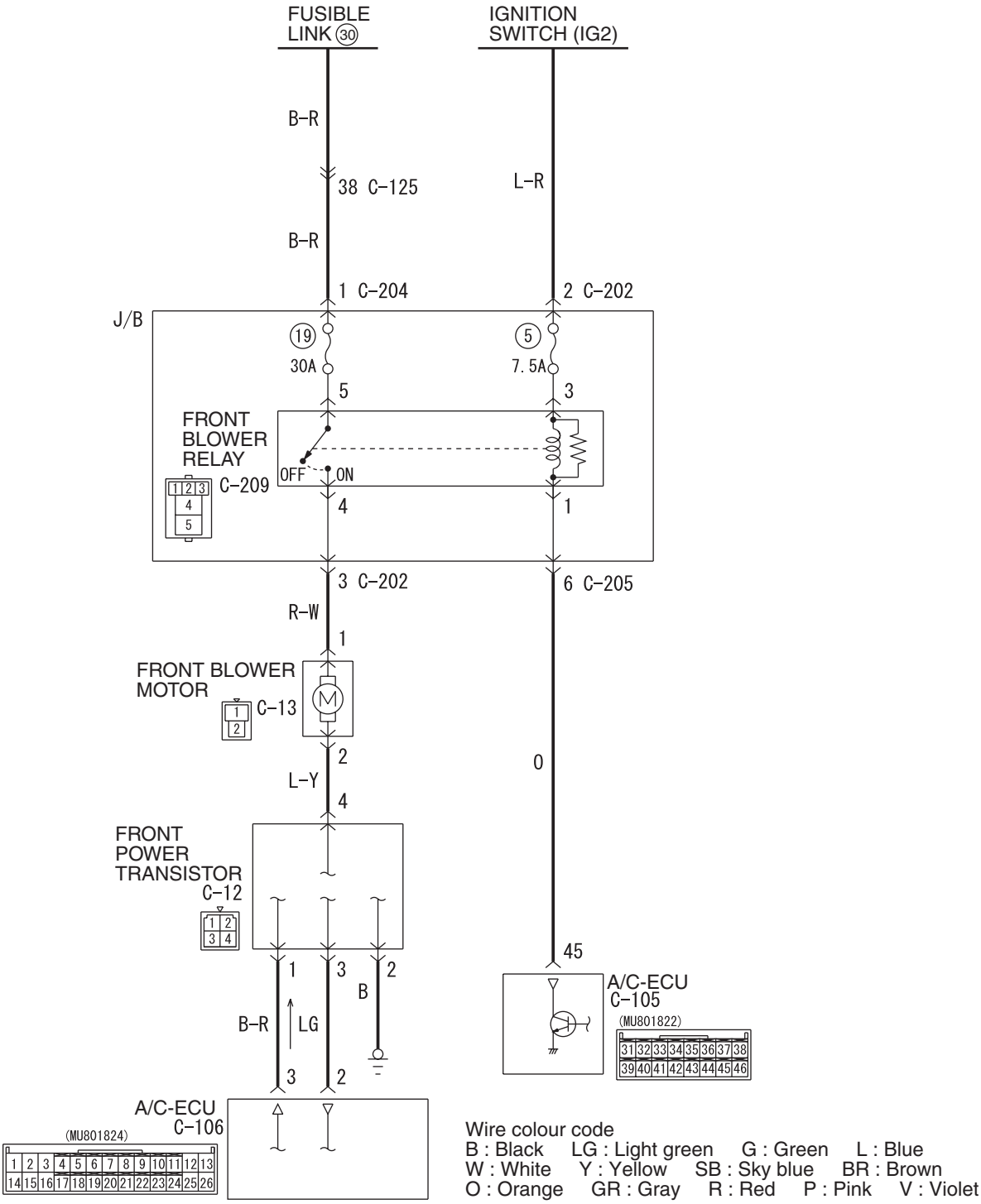

AC503286
W4X55E26AA

COMMENTS ON TROUBLE SYMPTOM

If the blower motor does not operate, the blower motor circuit system may be defective.

PROBABLE CAUSES

- Malfunction of the front blower motor (blower linear controller).
- Malfunction of the automatic air conditioner control panel (A/C-ECU)
- Damaged the wiring harness or connectors

DIAGNOSIS PROCEDURE

STEP 1. Check the operation of the heater control panel

Check that the A/C switch, rear window defogger switch and outside/inside air selection switch can operate.

Q: Is the check result normal?

YES <Except vehicles for Hong Kong and Singapore> : INSPECTION PROCEDURE 28: Refer to A/C-ECU power supply system <Except vehicles for Hong Kong and Singapore>P.55-186 .

YES <Vehicles for Hong Kong and Singapore> : INSPECTION PROCEDURE 29: Refer to A/C-ECU power supply system <Vehicles for Hong Kong and Singapore>P.55-193 .

NO : Repair the CAN bus line (Refer to GROUP 54F- Troubleshooting P.54F-13.)

STEP 2. M.U.T.-III actuator test

Carry out the actuator test. (Refer to P.55-201)

- Item 01, 02, 03: Front blower fan

Q: Does the blower motor work normally?

YES : Go to Step 3.

NO : Go to Step 4.

STEP 3. Recheck the trouble symptom

Q: Is the check result normal?

YES : Intermittent malfunction (GROUP 00 – How to Cope with Intermittent Malfunction P.00-5).

NO : Replace the air conditioner control panel (A/C-ECU) or the blower motor (blower linear controller).

STEP 4. Connector check: C-209 front blower relay connector

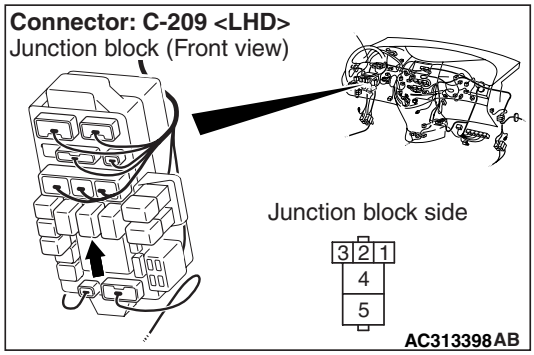

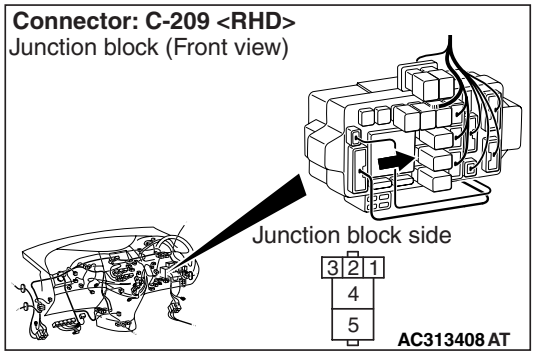

Q: Is the check result normal?

YES : Go to Step 5.

NO : Repair the connector.

STEP 5. Check the blower relay.

Refer to GROUP 55, On-vehicle Service – Power relay check P.55-208.

Q: Is the blower relay in good condition?

YES : Go to Step 6.

NO : Replace the blower relay.

Main Index
Group TOC

STEP 6. Connector check: C-13 front blower motor connector and C-105 A/C-ECU connector

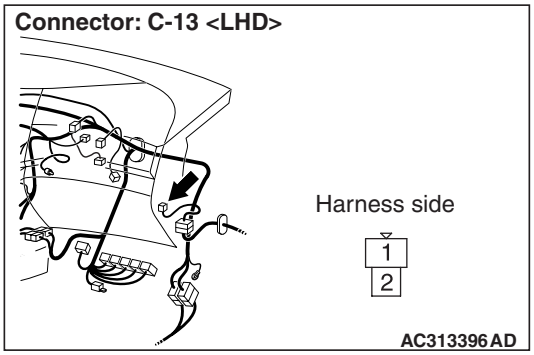

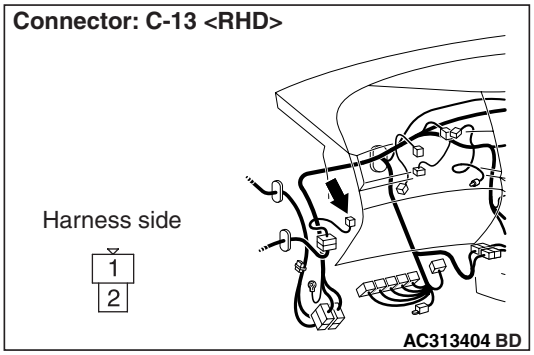

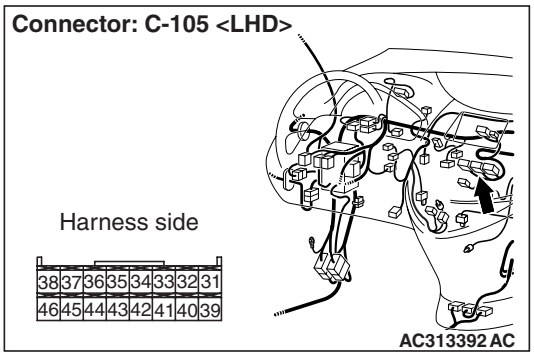

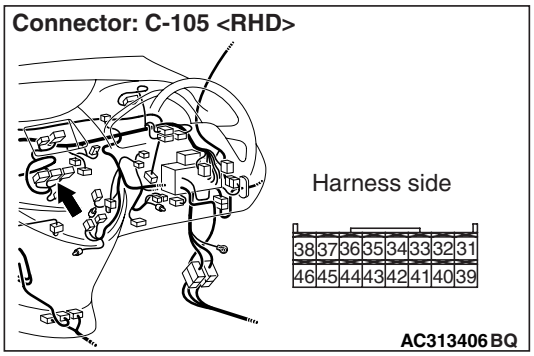

Q: Is the check result normal?

YES : Go to Step 7.

NO : Repair the connector.

STEP 7. Voltage measurement at the C-13 front blower motor controller connector.

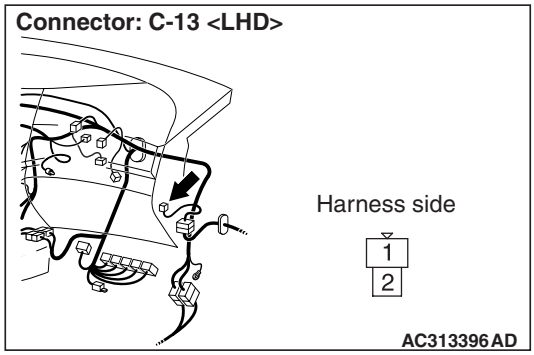

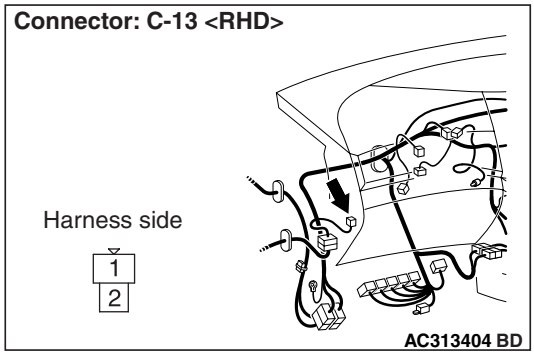

(1) Disconnect the connector, and measure at the wiring harness side.

(2) Turn the ignition switch to the ON position.

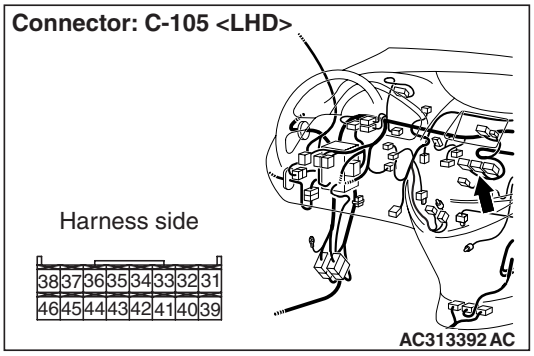

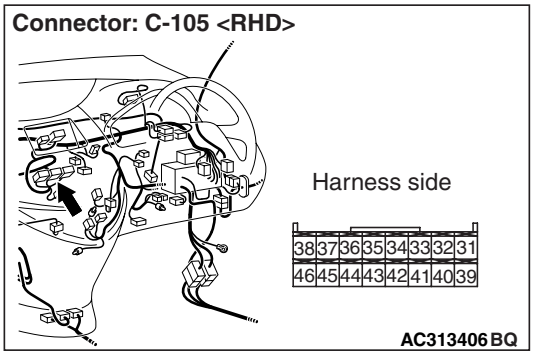

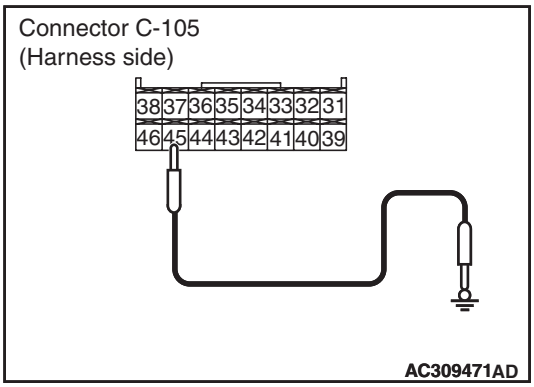

(3) Disconnect A/C-ECU connector C-105, and earth terminal 45.

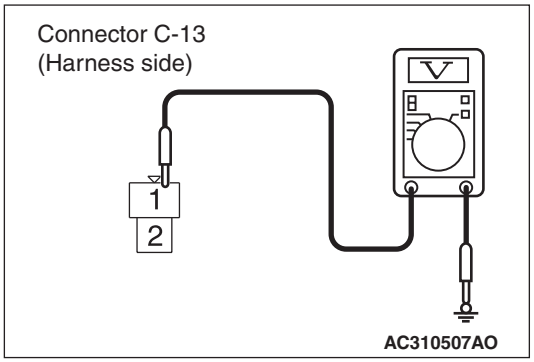

(4) measure the voltage between terminal 1 and body earth.

OK: System voltage

Q: Is the check result normal?
YES : Go to Step 14.
NO : Go to Step 8.

STEP 8. Voltage measurement at C-209 front blower relay connector.

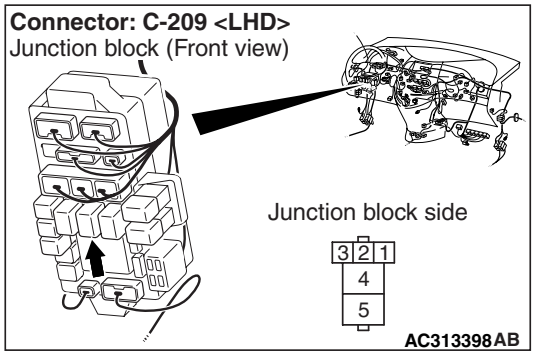

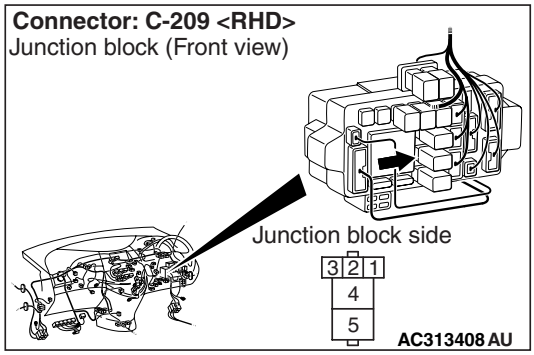

(1) Remove the relay, and measure at the junction block side.
(2) Turn the ignition switch to the ON position.

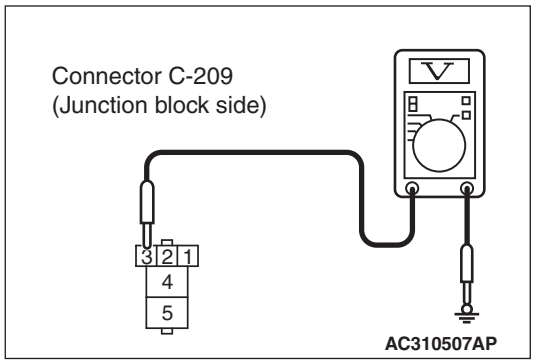

(3) Voltage between terminal 3 and body earth.

OK: System voltage

Q: Is the check result normal?
YES : Go to Step 10.
NO : Go to Step 9.

Main Index
Group TOC

STEP 9. Check the wiring harness between C-209 front blower relay connector terminal No.3 and the ignition switch (IG2).

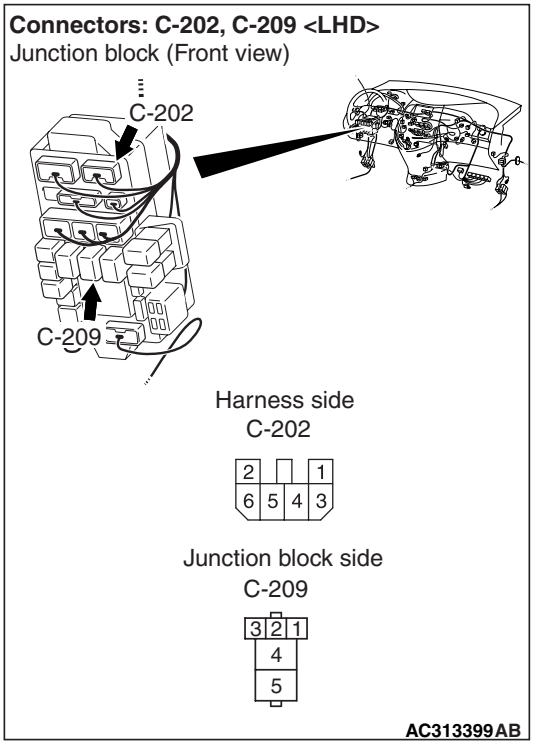

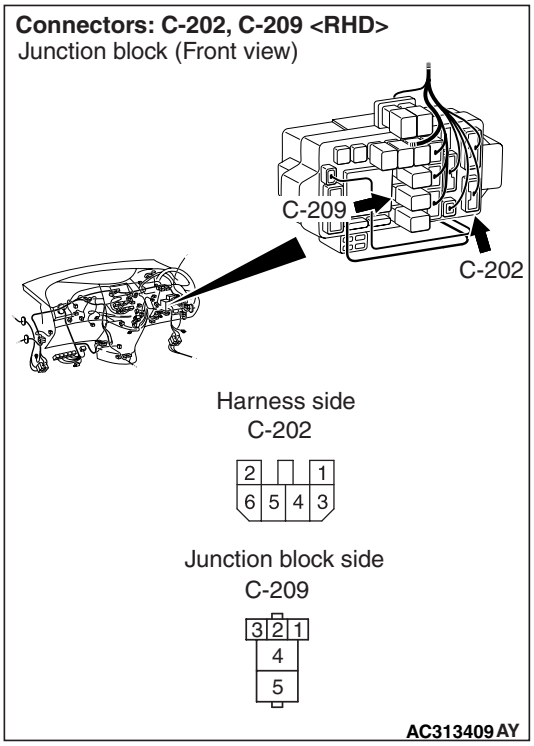

NOTE: Prior to the wiring harness inspection, check junction block connector C-202, and repair if necessary.

- Check the blower relay power supply line for open circuit.

Q: Is the check result normal?

YES : The trouble can be an intermittent malfunction (Refer to GROUP 00, How to Cope with Intermittent Malfunction P.00-5).

NO : Repair the wiring harness.

STEP 10. Voltage measurement at C-209 front blower relay connector.

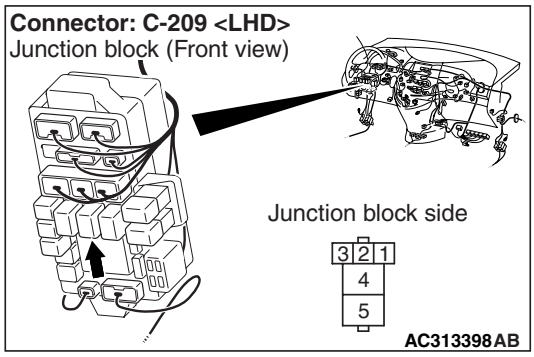

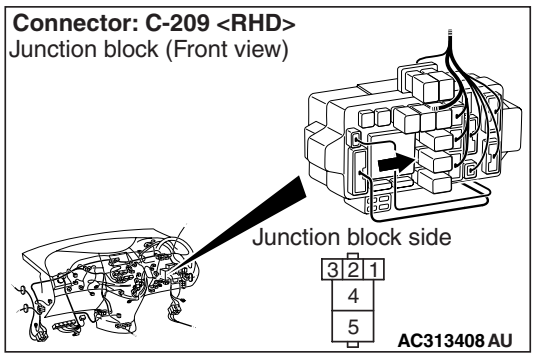

(1) Remove the relay, and measure at the junction block side.

(2) Turn the ignition switch to the ON position.

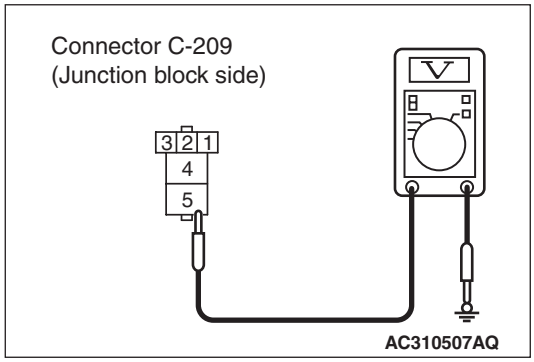

(3) Voltage between terminal 5 and body earth.

OK: System voltage

Q: Is the check result normal?

YES : Go to Step 12.

NO : Go to Step 11.

Main Index
Group TOC

STEP 11. Check the wiring harness between C-209 front blower relay connector terminal No.5 and fusible link (30).

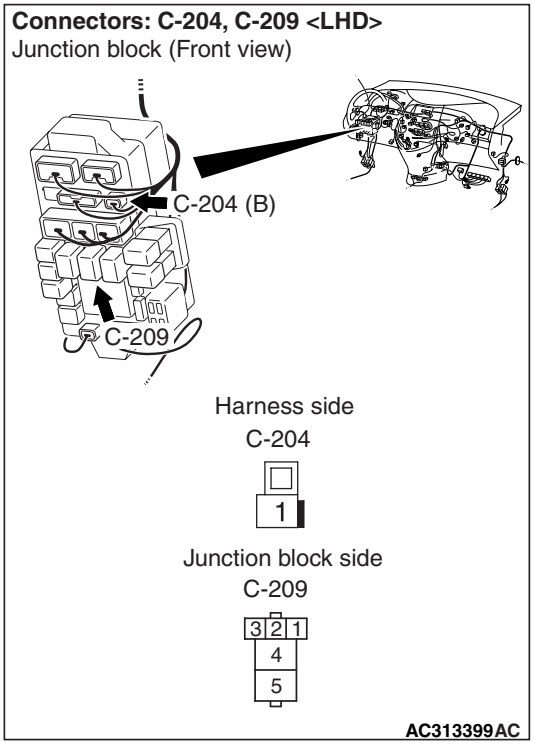

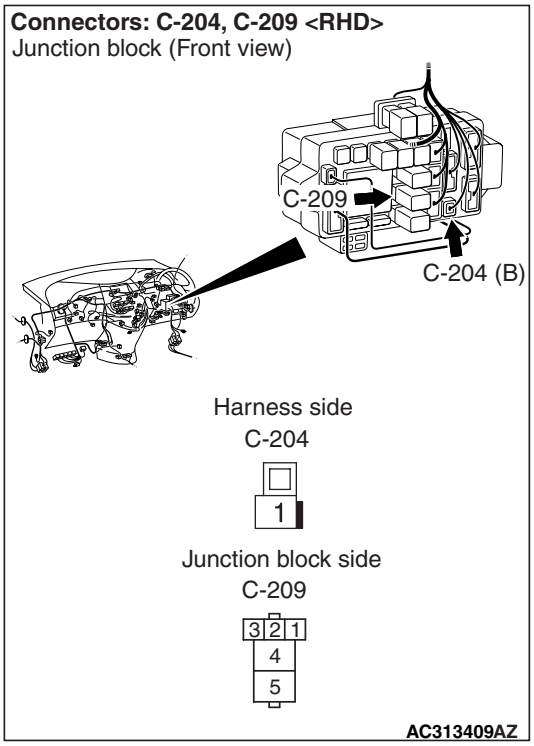

NOTE:

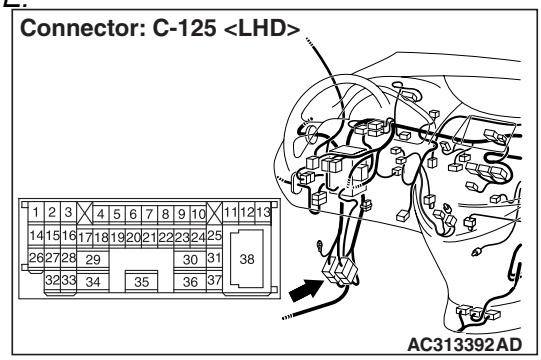

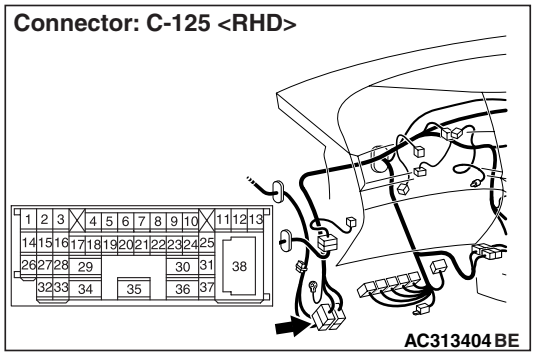

Prior to the wiring harness inspection, check intermediate connectors C-125 and junction block connector C-204, and repair if necessary.

- Check the blower relay power supply line for open circuit.

Q: Is the check result normal?

YES : The trouble can be an intermittent malfunction (Refer to GROUP 00, How to Cope with Intermittent Malfunction P.00-5).

NO : Repair the wiring harness.

Main Index
Group TOC

STEP 12. Check the wiring harness between C-209 front blower relay connector terminal No.4 and C-13 front blower motor connector terminal No.1.

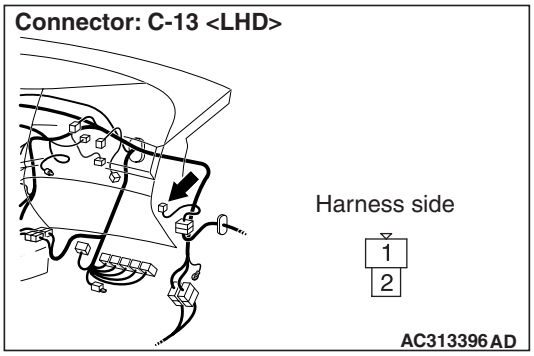

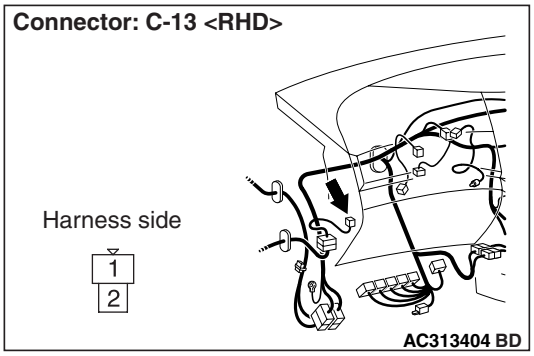

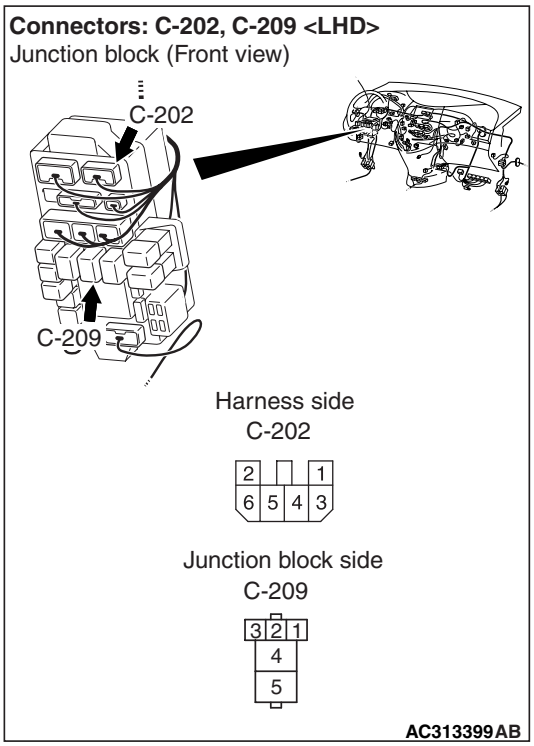

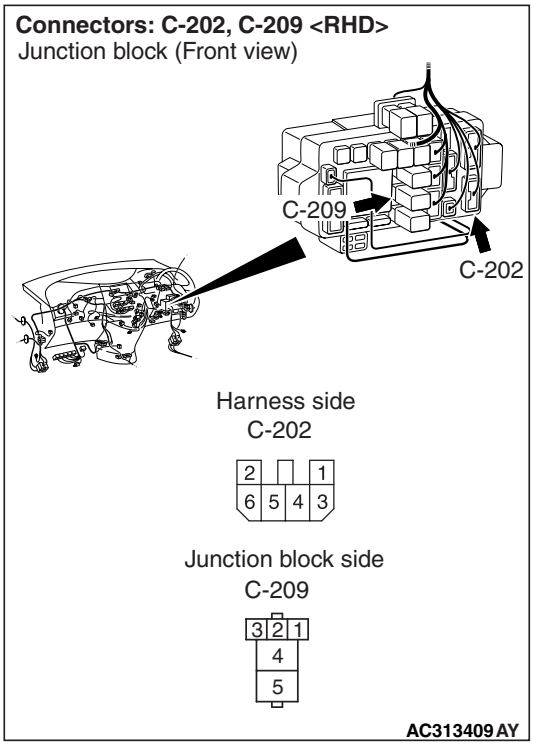

NOTE: Prior to the wiring harness inspection, check junction block connector C-202, and repair if necessary.

- Check the blower relay earth wires for open circuit.

Q: Is the check result normal?
YES : Go to Step 13.
NO : Repair the wiring harness.

Main Index
Group TOC

STEP 13. Check the wiring harness between C-209 front blower relay connector terminal No.1 and C-105 A/C-ECU connector terminal No.45.

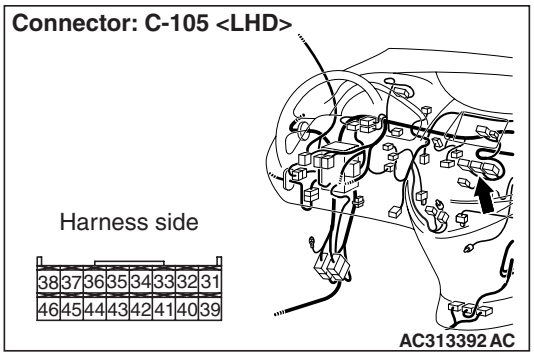

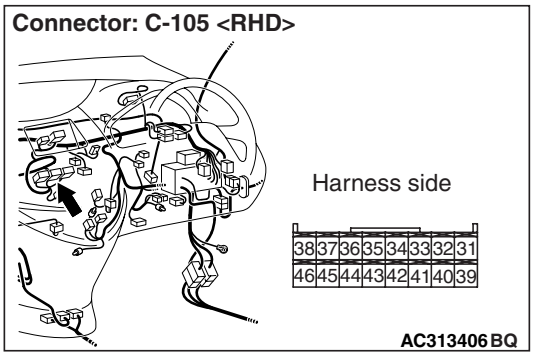

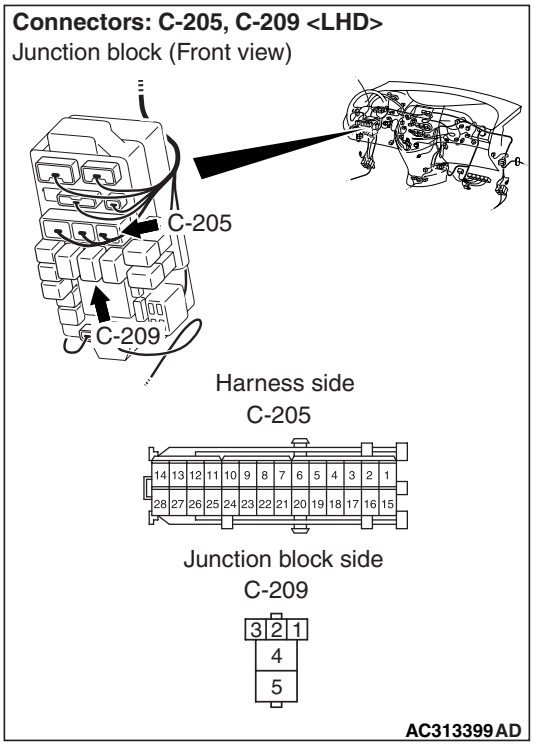

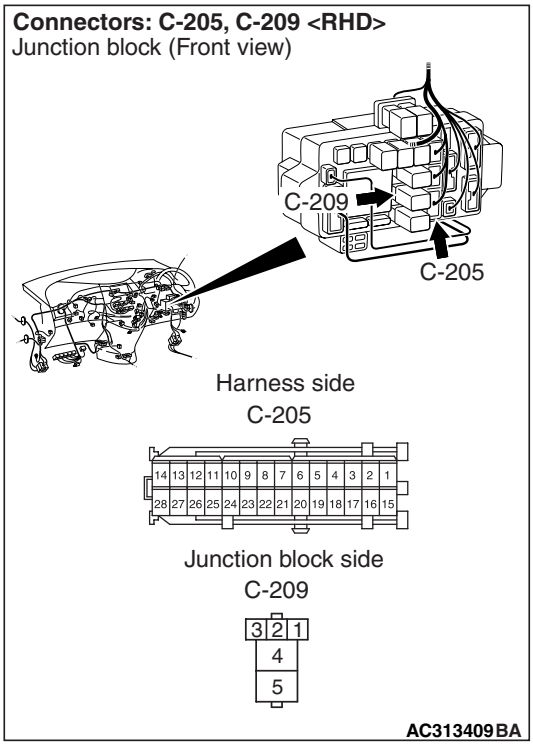

NOTE: Prior to the wiring harness inspection, check junction block connector C-205, and repair if necessary.

- Check the blower relay power supply line for open circuit.

Q: Is the check result normal?

YES : The trouble can be an intermittent malfunction (Refer to GROUP 00, How to Cope with Intermittent Malfunction P.00-5).

NO : Repair the wiring harness.

STEP 14. Check the front blower motor

Refer to P.55-223.

Q: Is the check result normal?

YES : Go to Step 15.

NO : Replace the outside/inside air selection damper control motor.

Main Index
Group TOC

STEP 15. Connector check: C-12 front power transistor controller connector

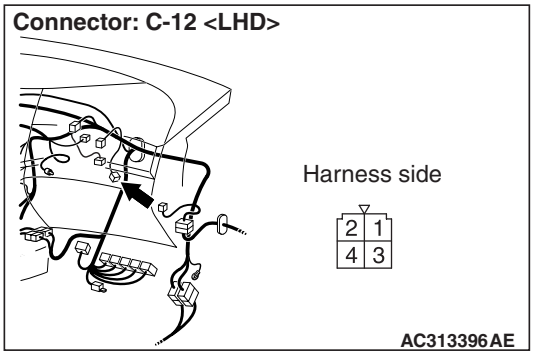

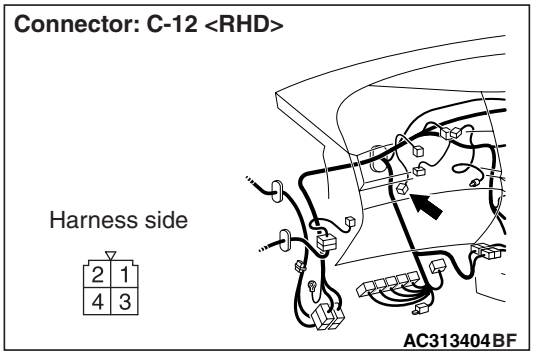

Q: Is the check result normal?
YES : Go to Step 16.
NO : Repair the connector.

STEP 16. Resistance measurement at the C-12 front power transistor connector.

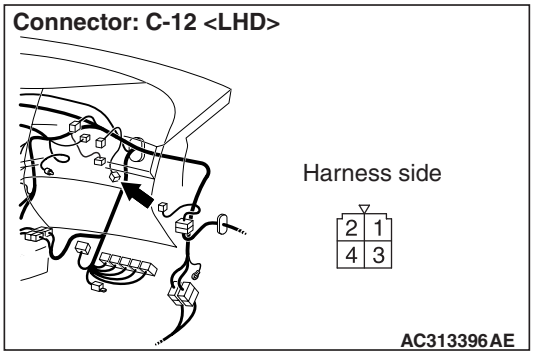

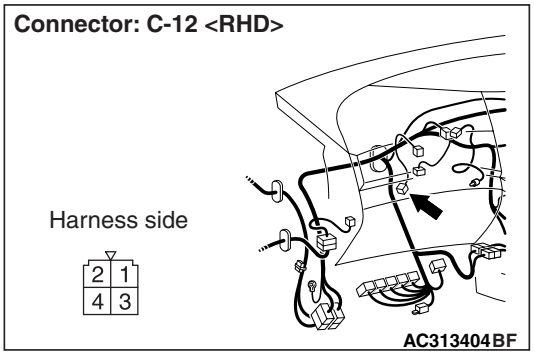

(1) Disconnect the connector, and measure at the wiring harness side.

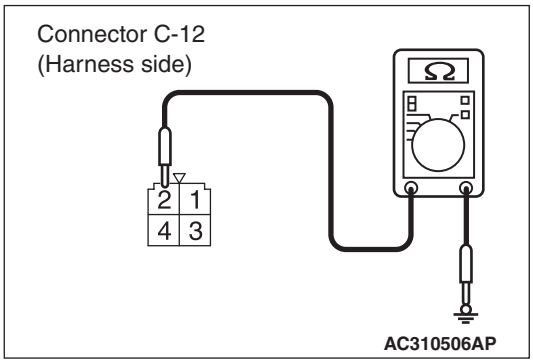

(2) Continuity between terminal 2 and body earth

OK: 2Ω or less

Q: Is the check result normal?
YES : Go to Step 18.
NO : Go to Step 17.

STEP 17. Check the wiring harness between C-12 front power transistor connector terminal No.2 and body earth.

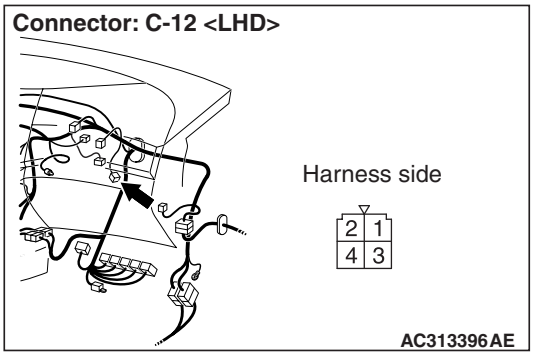

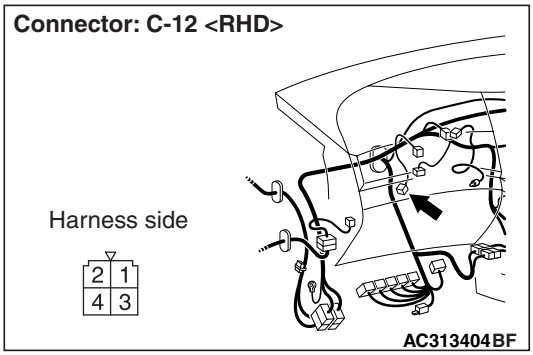

- Check the blower linear controller earth line for open circuit.

Q: Is the check result normal?
YES : The trouble can be an intermittent malfunction (Refer to GROUP 00, How to Cope with Intermittent Malfunction P.00-5).
NO : Repair the wiring harness.

STEP 18. Check the wiring harness between C-13 front blower motor connector terminal No.2 and C-12 front power transistor controller connector terminal No.4.

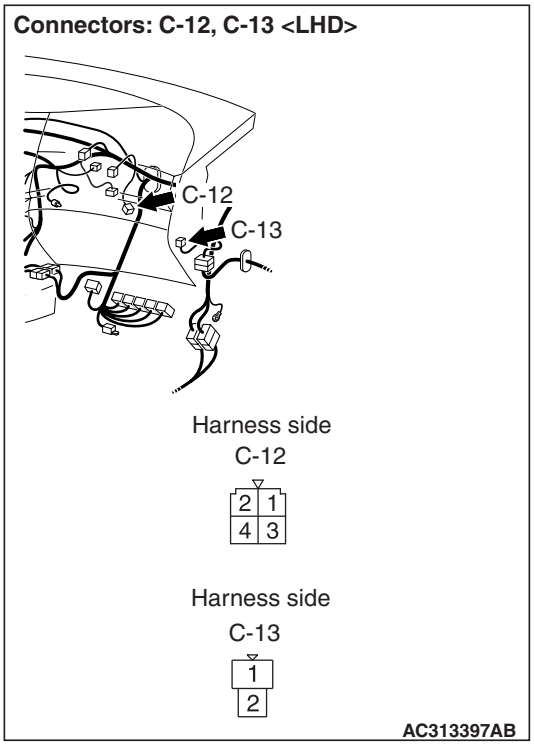

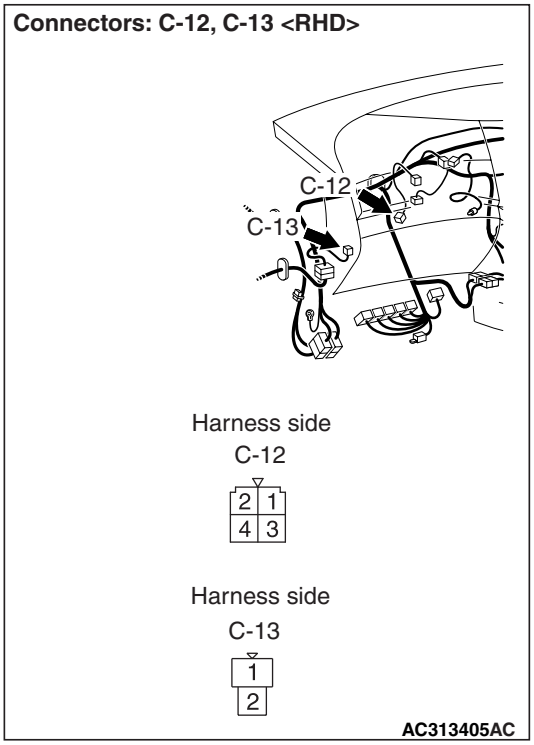

- Check the blower linear controller power supply line for open circuit.

Q: Is the check result normal?
YES : Go to Step 19.
NO : Repair the wiring harness.

STEP 19. Check the wiring harness between C-106 A/C-ECU connector (terminals 2 and 3) and C-12 front power transistor controller connector (terminals 3 and 1).

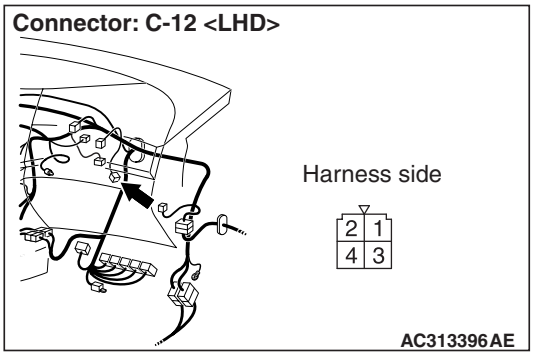

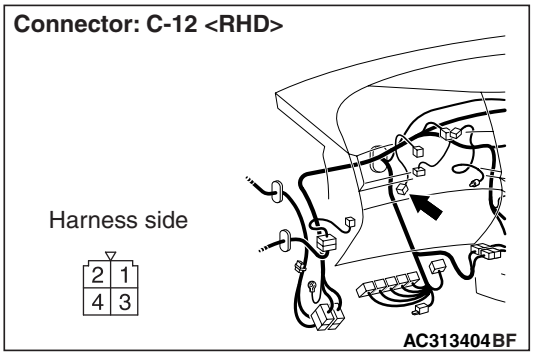

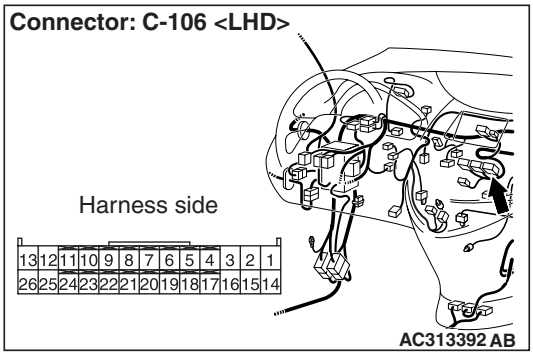

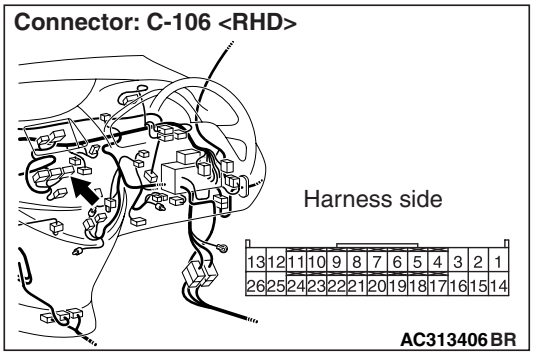

- Check the blower linear controller power supply line for open circuit.

Q: Is the check result normal?
YES : Go to Step 20.
NO : Repair the wiring harness.

Main Index
Group TOC

STEP 20. Replace the front power transistor and recheck the trouble symptom

Check that the front blower motor operates normally.

Q: Is the check result normal?

YES : This diagnosis is complete.

NO : Replace the A/C-ECU.

Inspection Procedure 4: The Blower Air Volume cannot be Changed

Blower Motor Circuit

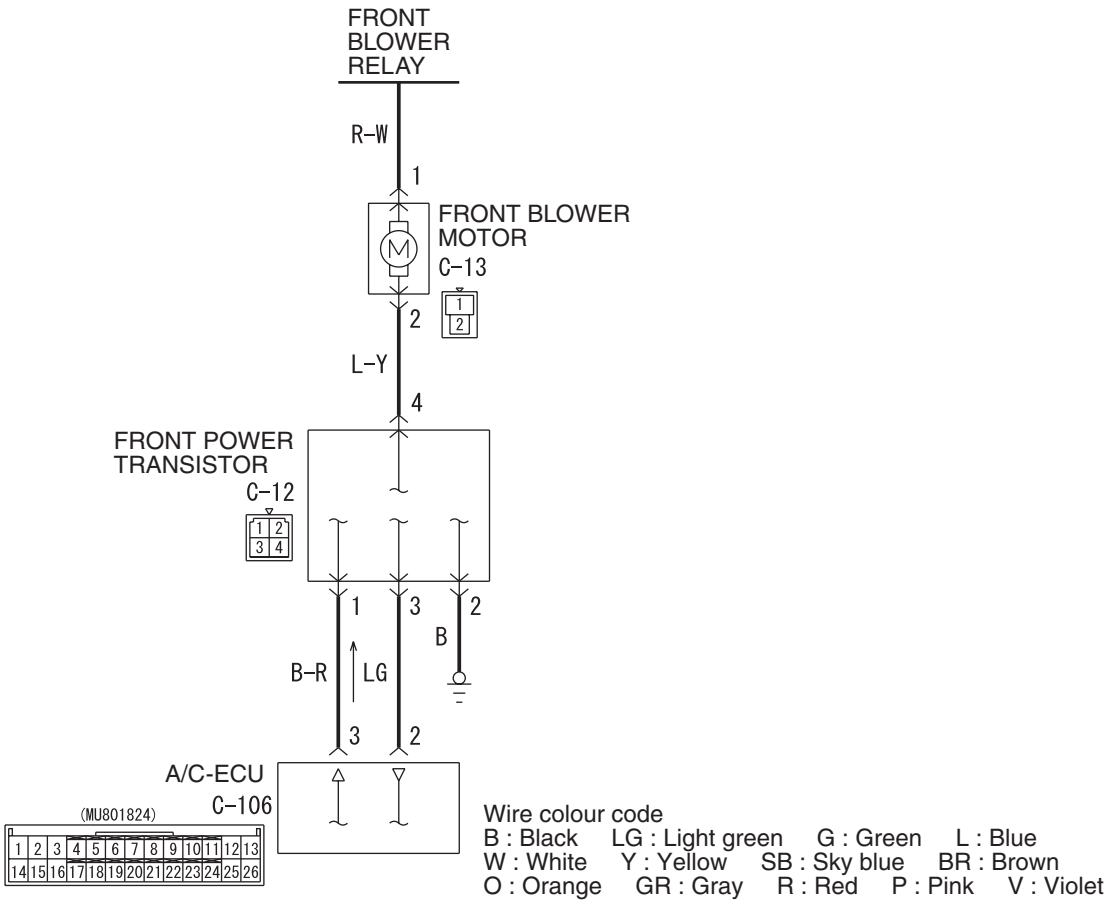

W4X55E24AA

COMMENTS ON TROUBLE SYMPTOM

If the blower air volume can not be changed when the blower switch is operated, the circuit between front power transistor and A/C-ECU may be defective.

PROBABLE CAUSES

- Front power transistor
- Damaged the wiring harness or connectors
- Malfunction of the automatic air conditioner control panel (A/C-ECU)

DIAGNOSIS PROCEDURE

STEP 1. M.U.T.-III actuator test

Carry out the actuator test. (Refer to P.55-201.)

- Item 01, 02, 03: Blower motor

Q: Does the blower motor work normally?
YES : . Go to Step 2.
NO : . Go to Step 4.

STEP 2. M.U.T.-III data list

Check that the following service data display contents are normal. (Refer to P.55-198.)

- Item 20: Front blower fan
- Item 21: Front blower fan (Target)

Q: Does the blower motor work normally?
YES : . Go to Step 3.
NO : . Go to Step 10.

STEP 3. Replace the front power transistor and check the trouble symptom

Check that the front blower motor operates normally.

Q: Does the blower motor work normally?
YES : . This diagnosis is complete.
NO : . Replace the automatic air conditioner control panel (A/C-ECU)

STEP 4. Connector check: C-12 front power transistor controller connector

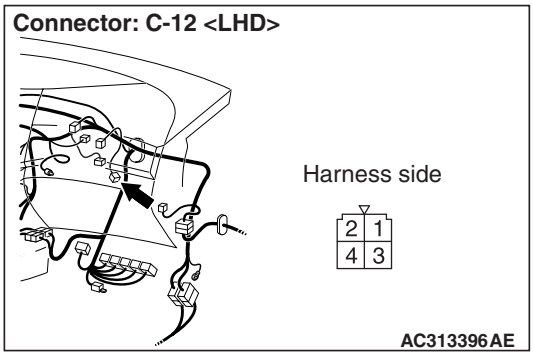

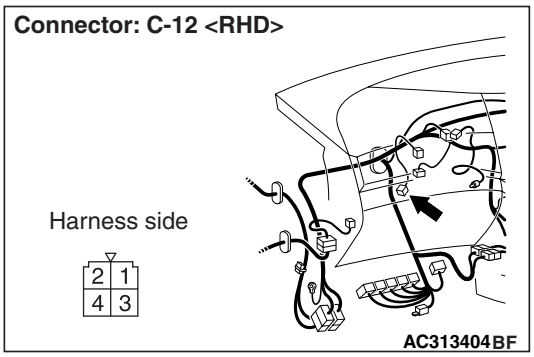

Q: Is the check result normal?
YES : Go to Step 5.
NO : Repair the connector.

STEP 5. Resistance measurement at the C-12 front power transistor connector.

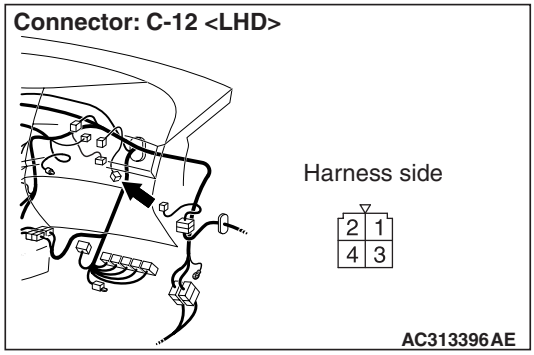

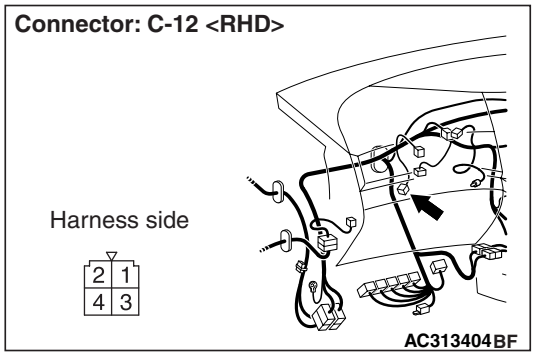

(1) Disconnect the connector, and measure at the wiring harness side.

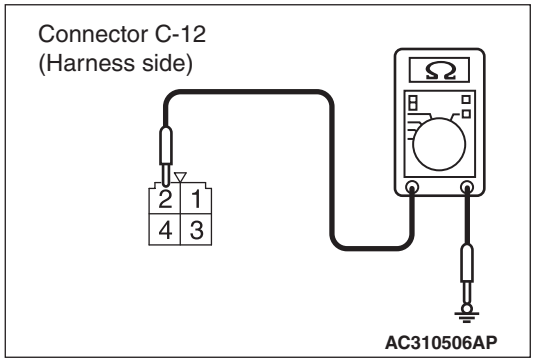

(2) Continuity between terminal 2 and body earth

OK: 2Ω or less

Q: Is the check result normal?
YES : Go to Step 7.
NO : Go to Step 6.

Main Index
Group TOC

STEP 6. Check the wiring harness between C-12 front power transistor connector terminal No.2 and body earth.

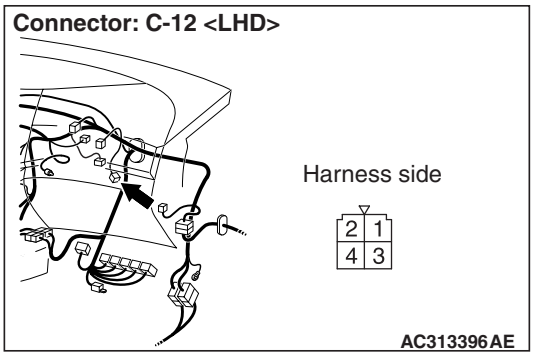

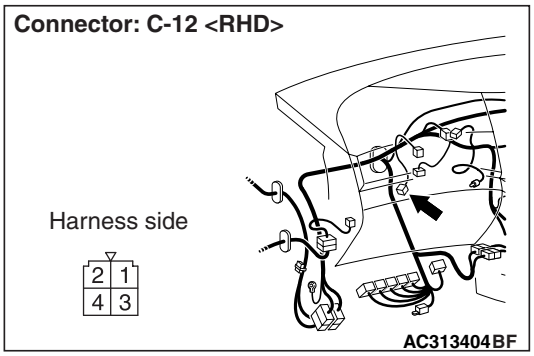

- Check the blower linear controller earth line for open circuit.

Q: Is the check result normal?
YES : The trouble can be an intermittent malfunction (Refer to GROUP 00, How to Cope with Intermittent Malfunction P.00-5).
NO : Repair the wiring harness.

STEP 7. Connector check: C-106 A/C-ECU controller connector

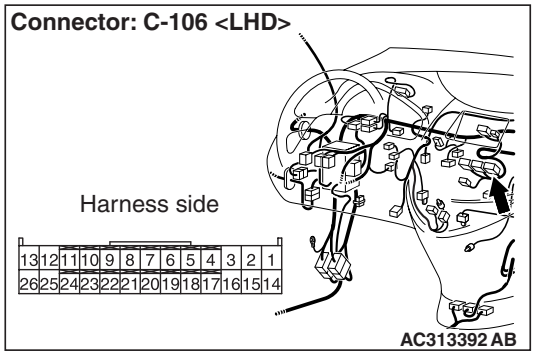

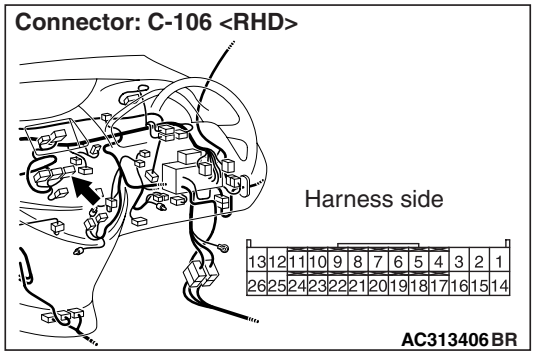

Q: Is the check result normal?
YES : Go to Step 8.
NO : Repair the connector.

Main Index
Group TOC

STEP 8. Check the wiring harness between C-106 A/C-ECU connector (terminals 2 and 3) and C-12 front power transistor controller connector (terminals 3 and 1).

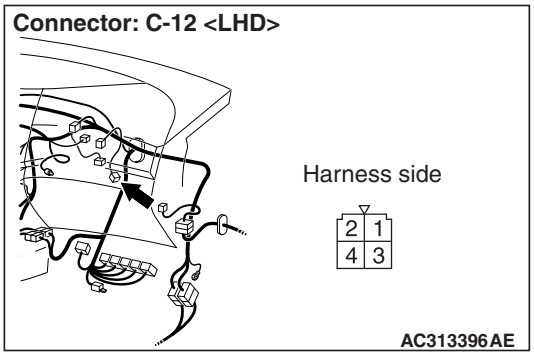

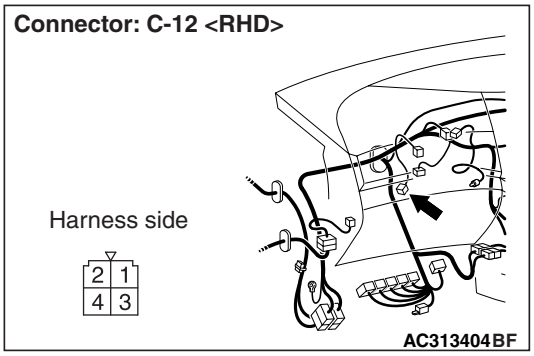

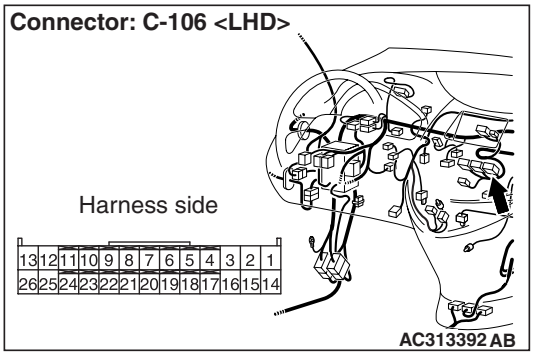

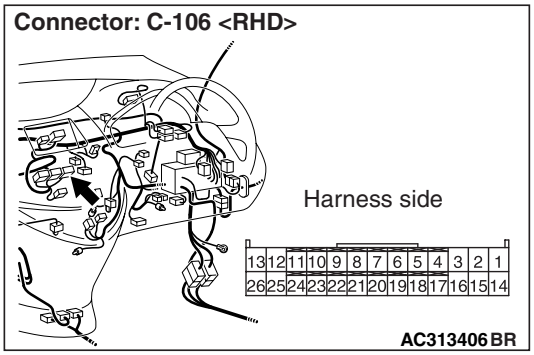

- Check the blower linear controller power supply line for open circuit.

Q: Is the check result normal?
YES : Go to Step 9.
NO : Repair the wiring harness.

STEP 9. Replace the front power transistor and check the trouble symptom

Check that the front blower motor operates normally.

Q: Does the blower motor work normally?
YES : This diagnosis is complete.
NO : Replace the automatic air conditioner control panel (A/C-ECU).

STEP 10. Check the trouble symptom

Check that the front blower motor operates normally.

Q: Is the check result normal?
YES : This diagnosis is complete.
NO : Replace the automatic air conditioner control panel (A/C-ECU).

Main Index
Group TOC

Inspection Procedure 5: The Inside/Outside Air Changeover is impossible. <Except vehicles for Hong Kong and Singapore>

Outside/Inside Air Selection Damper Control Motor Circuit

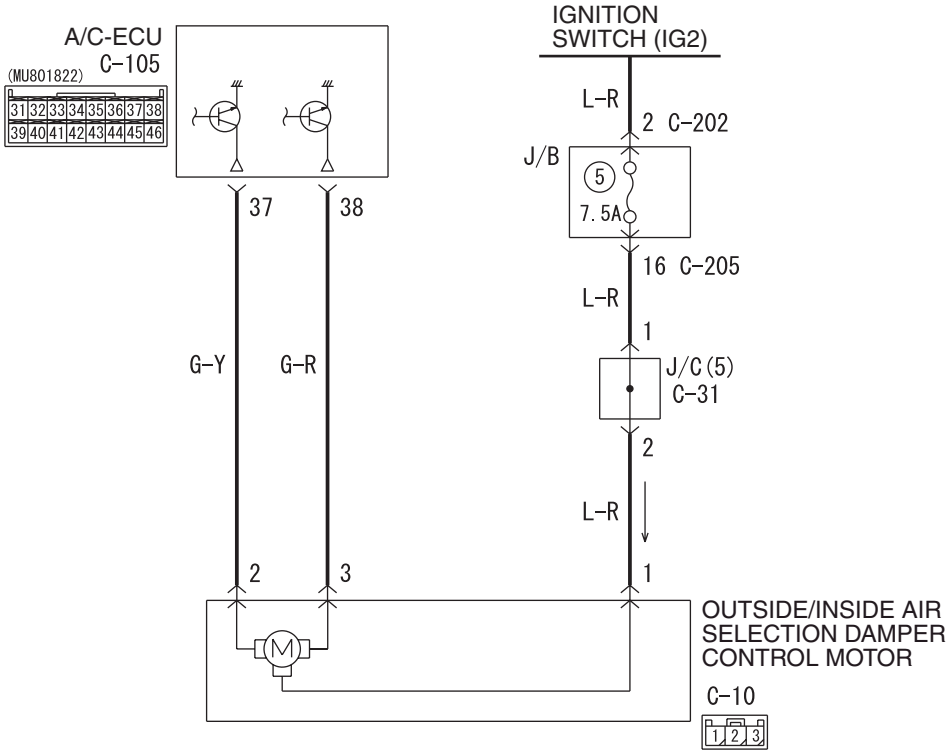

Wire colour code
B : Black LG : Light green G : Green L : Blue W : White Y : Yellow SB : Sky blue
BR : Brown O : Orange GR : Gray R : Red P : Pink V : Violet

W4X55E16AA

COMMENTS ON TROUBLE SYMPTOM

When inside air cannot be changed to outside air vice versa even if its changeover switch is on, the outside/inside air selection damper control motor system may be defective.

PROBABLE CAUSES

- Malfunction of the outside/inside air selection damper control motor
- Damaged the wiring harness or connectors
- Malfunction of the automatic air conditioner control panel (A/C-ECU)

DIAGNOSIS PROCEDURE

STEP 1. Check the operation of the heater control panel

Check that the A/C switch, rear window defogger switch and air volume control dial can operate.

Q: Is the check result normal?

YES : Go to Step 2.

NO : INSPECTION PROCEDURE 28: Refer to A/C-ECU power supply system <Except vehicles for Hong Kong and Singapore>P.55-186 .

STEP 2. M.U.T.-III actuator test

Carry out the actuator test. (Refer to P.55-201.)

- Item 30: In/out changeover dumper: Recirc
- Item 31: In/out changeover dumper: Fresh

Q: Does the blower motor work normally?

YES : Replace the automatic air conditioner control panel (A/C-ECU).

NO : Go to Step 3.

STEP 3. Connector check: C-10 outside/inside air selection damper control motor connector

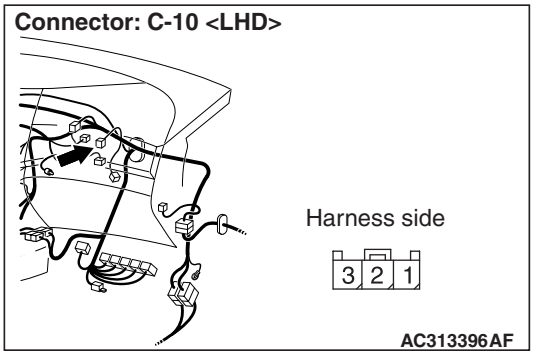

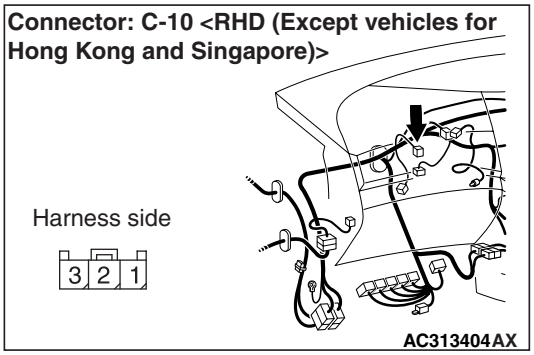

Q: Is the check result normal?

YES : Go to Step 4.

NO : Repair the connector.

STEP 4. Voltage measurement at C-10 outside/inside air selection damper control motor connector.

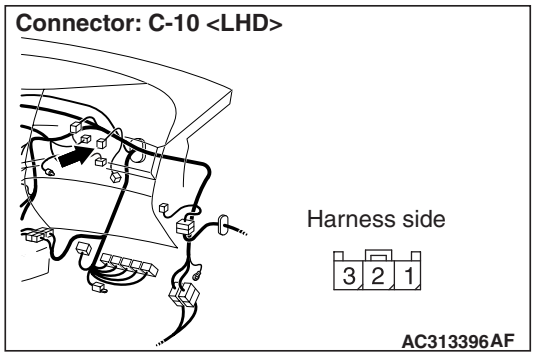

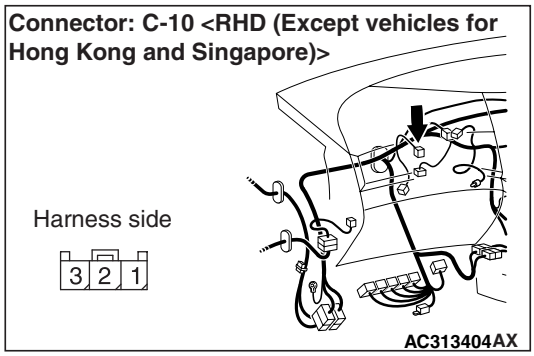

(1) Disconnect the connector, and measure at the wiring harness side.

(2) Turn the ignition switch to the ON position.

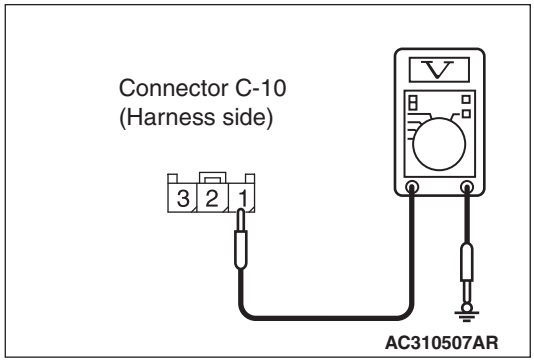

(3) Measure the voltage between terminal 1 and body earth.

OK: System voltage

Q: Is the check result normal?

YES : Go to Step 6.

NO : Go to Step 5.

Main Index
Group TOC

STEP 5. Check the wiring harness between C-10 outside/inside air selection damper control motor connector terminal No.1 and the ignition switch (IG2).

Connector: C-10 <LHD>

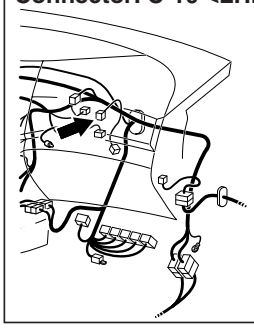

Connector: C-10 <RHD (Except vehicles for Hong Kong and Singapore)>

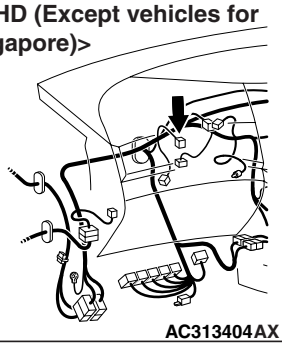

NOTE:

Connector: C-31 <LHD>

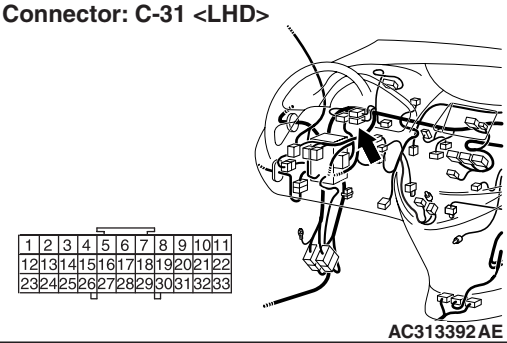

Connector: C-31 <RHD (Except vehicles for Hong Kong and Singapore)>

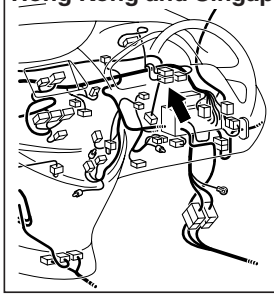

Connectors: C-202, C-205 <LHD>
Junction block (Front view)

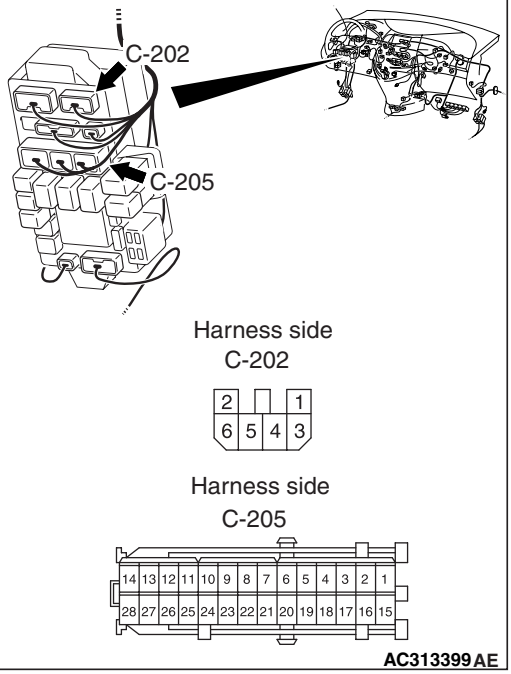

Connectors: C-202, C-205 <RHD (Except vehicles for Hong Kong and Singapore)>
Junction block (Front view)

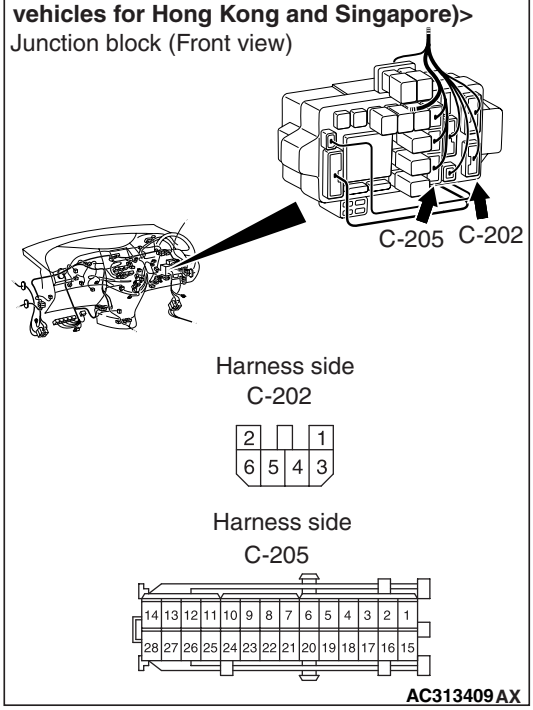

Prior to the wiring harness inspection, check joint connector C-31 and junction block connectors C-205 and C-202, and repair if necessary.

- Check the motor power supply line for open circuit.

Q: Is the check result normal?

YES : The trouble can be an intermittent malfunction (Refer to GROUP 00, How to Cope with Intermittent Malfunction P.00-5).

NO : Repair the wiring harness.

STEP 6. Check the outside/inside air selection damper control motor

Refer to P.55-223.

Q: Is the check result normal?

YES : Go to Step 7.

NO : Replace the outside/inside air selection damper control motor.

STEP 7. Connector check: C-105 A/C-ECU connector

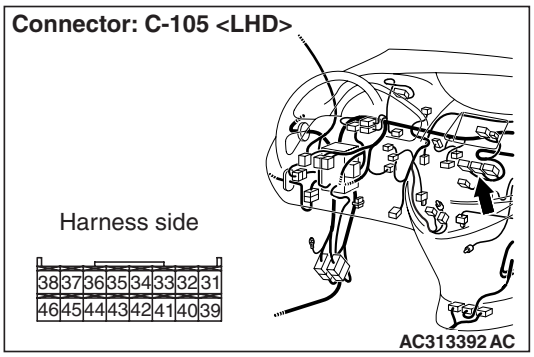

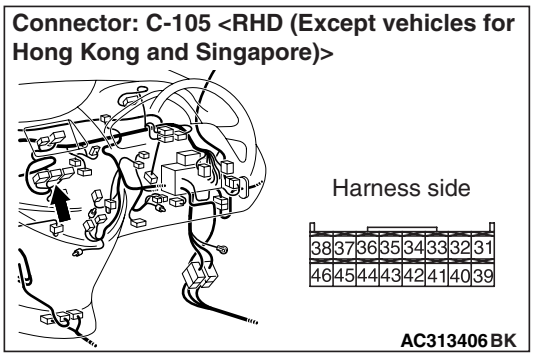

Q: Is the check result normal?

YES : Go to Step 8.

NO : Repair the connector.

STEP 8. Check the wiring harness between C-105 A/C-ECU connector (terminals 37 and 38) and C-10 outside/inside air selection damper control motor connector (terminals 2 and 3).

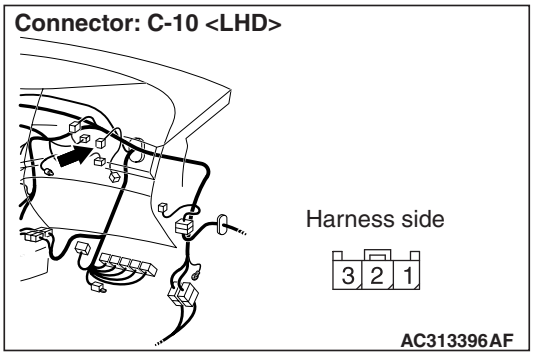

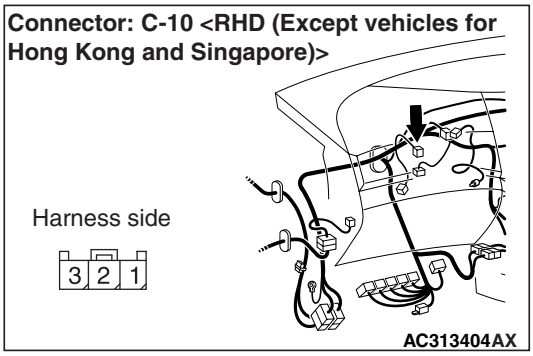

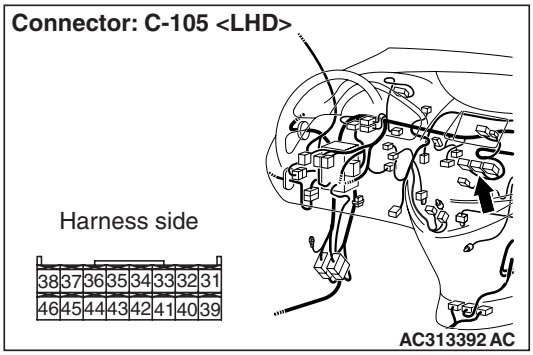

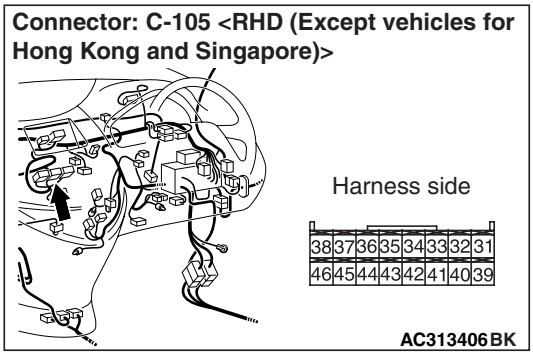

- Check the motor activating lines for open or short circuit.

Q: Is the check result normal?

YES : Replace the automatic air conditioner control panel (A/C-ECU).

NO : Repair the wiring harness.

Main Index
Group TOC

Inspection Procedure 6: The Inside/Outside Air Changeover is impossible. <Vehicles for Hong Kong and Singapore>

Outside/Inside Air Selection Damper Control Motor Circuit

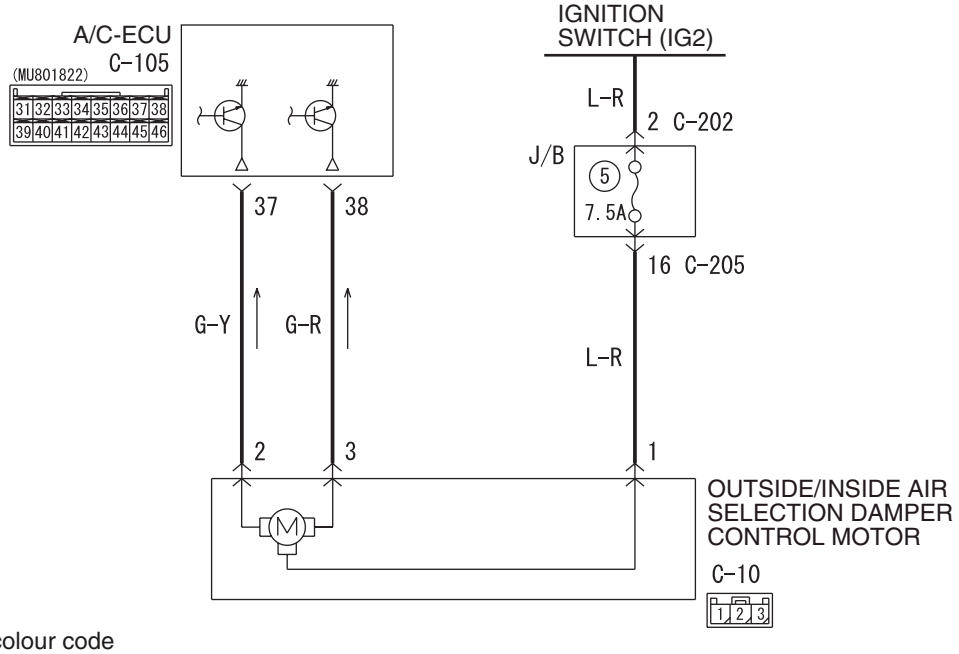

Wire colour code
B : Black LG : Light green G : Green L : Blue W : White Y : Yellow SB : Sky blue
BR : Brown O : Orange GR : Gray R : Red P : Pink V : Violet

W4X55X008A

COMMENTS ON TROUBLE SYMPTOM

When inside air cannot be changed to outside air vice versa even if its changeover switch is on, the outside/inside air selection damper control motor system may be defective.

PROBABLE CAUSES

- Malfunction of the outside/inside air selection damper control motor
- Damaged the wiring harness or connectors
- Malfunction of the automatic air conditioner control panel (A/C-ECU)

DIAGNOSIS PROCEDURE

STEP 1. Check the operation of the heater control panel

Check that the A/C switch, rear window defogger switch and air volume control dial can operate.

Q: Is the check result normal?

YES : Go to Step 2.

NO : INSPECTION PROCEDURE 29: Refer to A/C-ECU power supply system <Vehicles for Hong Kong and Singapore>P.55-193 .

STEP 2. M.U.T.-III actuator test

Carry out the actuator test. (Refer to P.55-201.)

- Item 30: In/out changeover dumper: Recirc
- Item 31: In/out changeover dumper: Fresh

Q: Does the blower motor work normally?

YES : Replace the automatic air conditioner control panel (A/C-ECU).

NO : Go to Step 3.

Main Index
Group TOC

STEP 3. Connector check: C-10 outside/inside air selection damper control motor connector

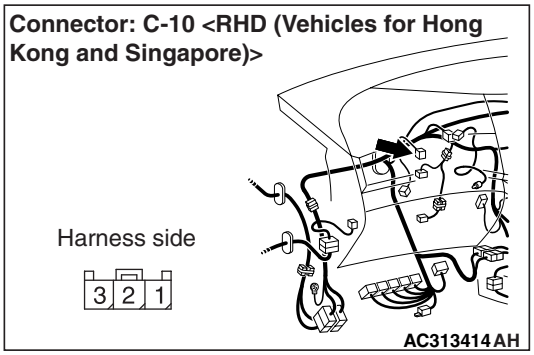

Q: Is the check result normal?
YES : Go to Step 4.
NO : Repair the connector.

STEP 4. Voltage measurement at C-10 outside/inside air selection damper control motor connector.

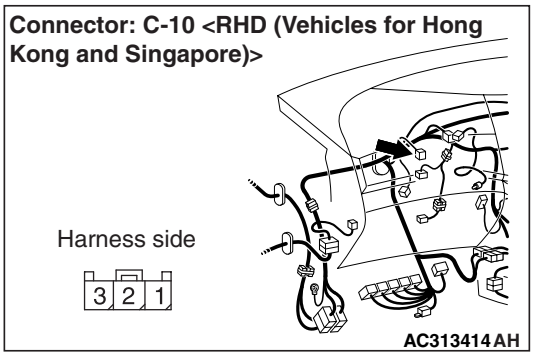

(1) Disconnect the connector, and measure at the wiring harness side.
(2) Turn the ignition switch to the ON position.

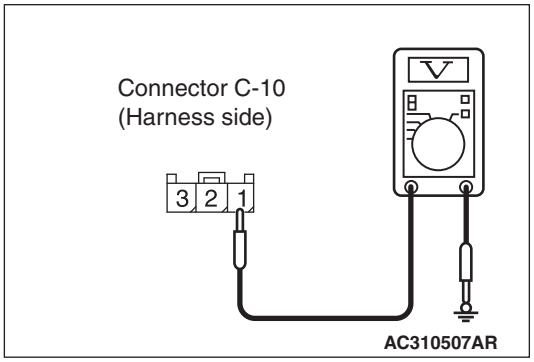

(3) Measure the voltage between terminal 1 and body earth.

OK: System voltage

Q: Is the check result normal?
YES : Go to Step 6.
NO : Go to Step 5.

STEP 5. Check the wiring harness between C-10 outside/inside air selection damper control motor connector terminal No.1 and the ignition switch (IG2).

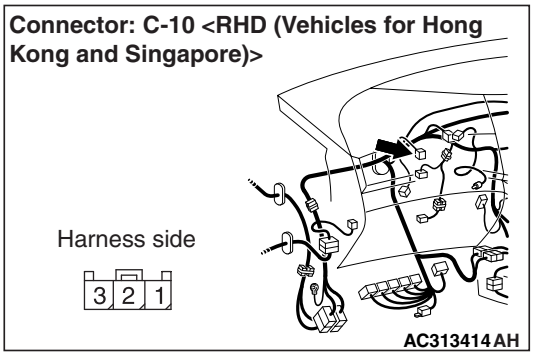

NOTE:

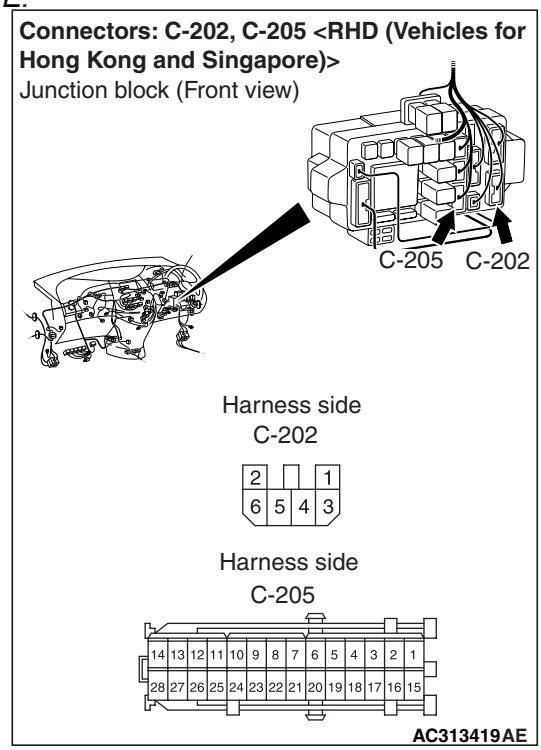

Prior to the wiring harness inspection, check junction block connectors C-205 and C-202, and repair if necessary.

- Check the motor power supply line for open circuit.

Q: Is the check result normal?
YES : The trouble can be an intermittent malfunction (Refer to GROUP 00, How to Cope with Intermittent Malfunction P.00-5).
NO : Repair the wiring harness.

Main Index
Group TOC

STEP 6. Check the outside/inside air selection damper control motor

Refer to P.55-223.

Q: Is the check result normal?

YES : Go to Step 7.

NO : Replace the outside/inside air selection damper control motor.

STEP 7. Connector check: C-105 A/C-ECU connector

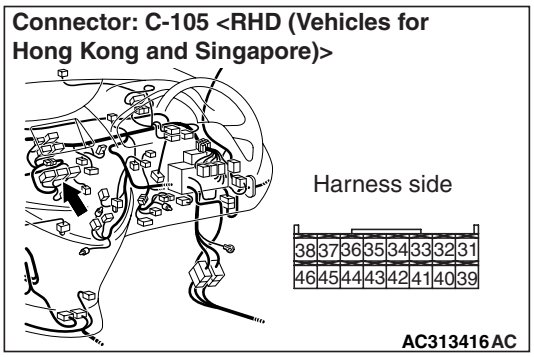

Q: Is the check result normal?

YES : Go to Step 8.

NO : Repair the connector.

STEP 8. Check the wiring harness between C-105 A/C-ECU connector (terminals 37 and 38) and C-10 outside/inside air selection damper control motor connector (terminals 2 and 3).

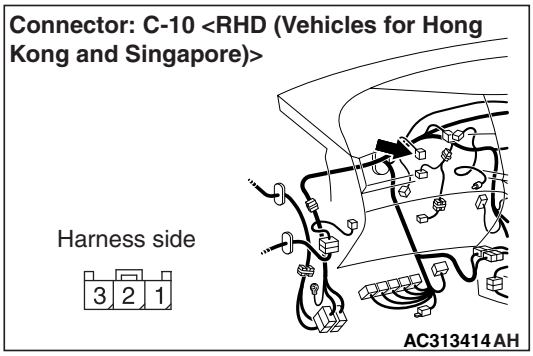

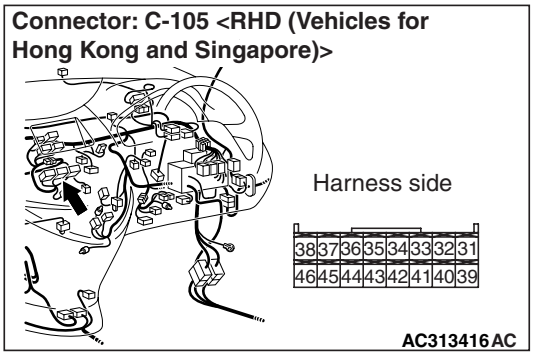

- Check the motor activating lines for open or short circuit.

Q: Is the check result normal?

YES : Replace the automatic air conditioner control panel (A/C-ECU).

NO : Repair the wiring harness.

Main Index
Group TOC

Inspection Procedure 7: The Compressor does not work <Except vehicles for Hong Kong and Singapore>

A/C Compressor Assembly Circuit

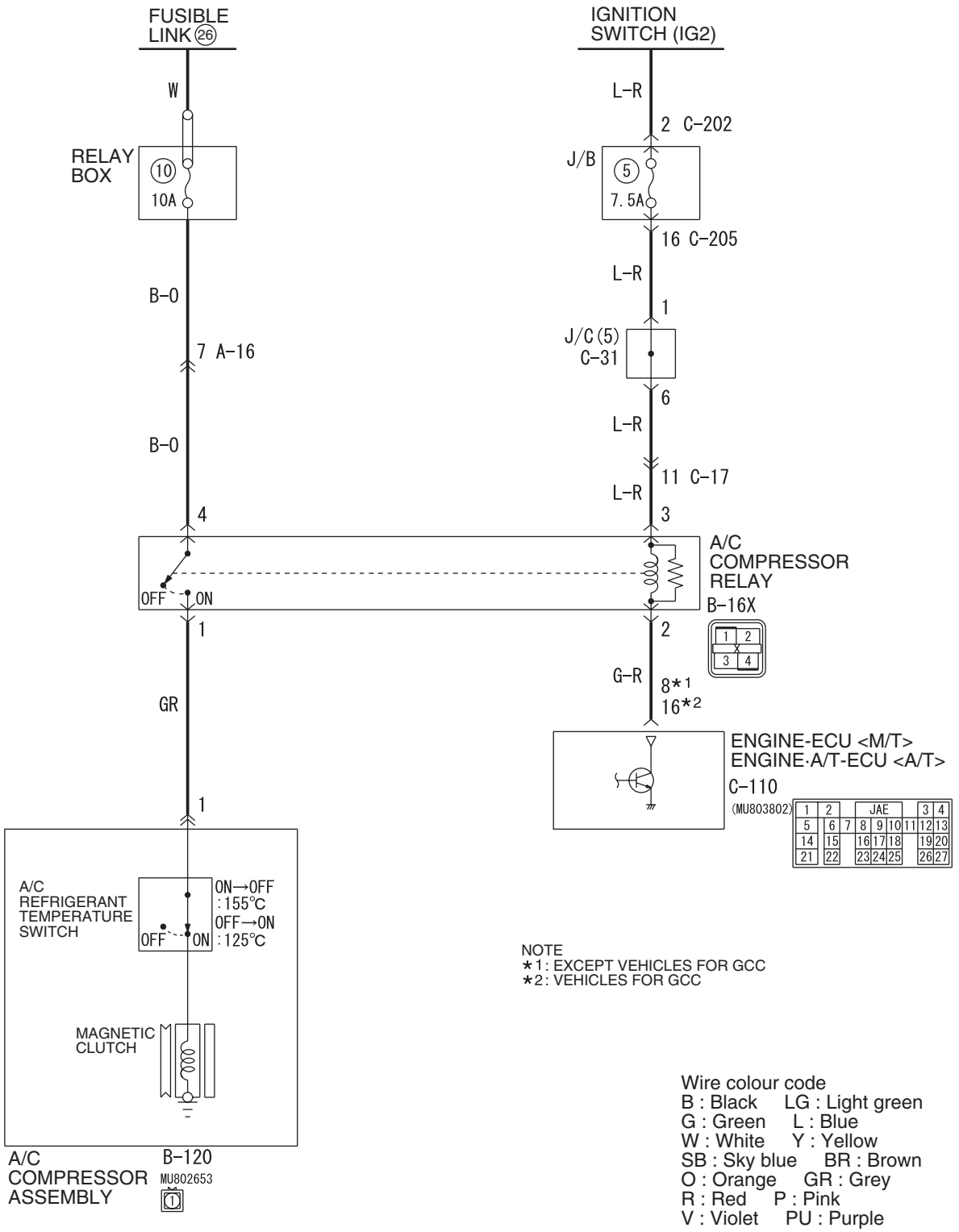

NOTE
*1: EXCEPT VEHICLES FOR GCC
*2: VEHICLES FOR GCC

Wire colour code
B : Black LG : Light green
G : Green L : Blue
W : White Y : Yellow
SB : Sky blue BR : Brown
O : Orange GR : Grey
R : Red P : Pink
V : Violet PU : Purple

W6X55X003A

Main Index
Group TOC

COMMENTS ON TROUBLE SYMPTOM

When the A/C compressor does not work, the A/C compressor circuit system or the CAN bus line may be defective.

PROBABLE CAUSES

- Malfunction of A/C compressor
- Malfunction of A/C compressor relay
- Malfunction of A/C pressure sensor
- Damaged harness wires and connectors
- Malfunction of engine-ECU <M/T> or engine-A/T-ECU <A/T>
- Malfunction of the A/C-ECU

DIAGNOSIS PROCEDURE

STEP 1. M.U.T.-III CAN bus diagnostics

Use the M.U.T.-III to diagnose the CAN bus lines.

Q: Is the check result normal?

YES : Go to Step 2.

NO : Repair the CAN bus lines. (Refer to GROUP 54F, Troubleshooting P.54F-13.)

STEP 2. M.U.T.-III diagnosis code

Check whether the air conditioner sets a diagnosis code or not.

Q: Is the check result normal?

YES : Go to Step 3.

NO : Refer to diagnosis code chart P.55-8.

STEP 3. M.U.T.-III data list

Check that the following service data display contents are normal. (Refer to P.55-198.)

- Item 04: Pressure sensor

Q: Is the check result normal?

YES : Go to Step 4.

NO : Inspection Procedure 20: Refer to A/C pressure sensor system <Except vehicles for Hong Kong and Singapore>P.55-147 .

STEP 4. Connector check: B-120 A/C compressor assembly connector and C-110 engine-ECU connector <M/T> or engine-A/T-ECU <A/T>

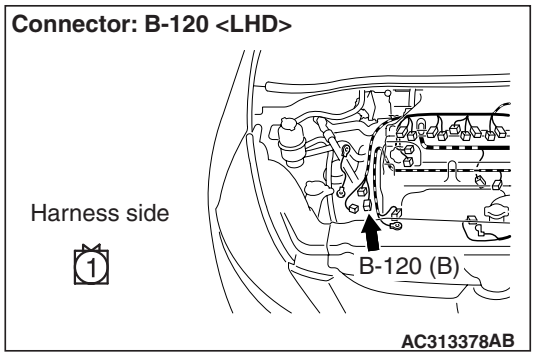

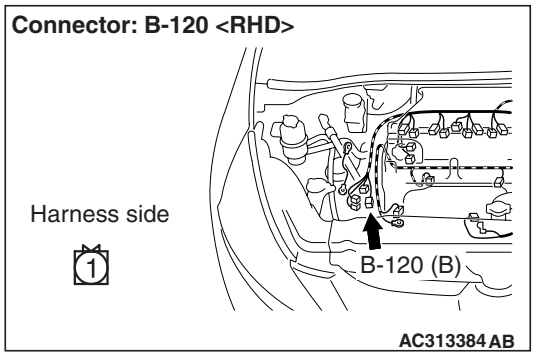

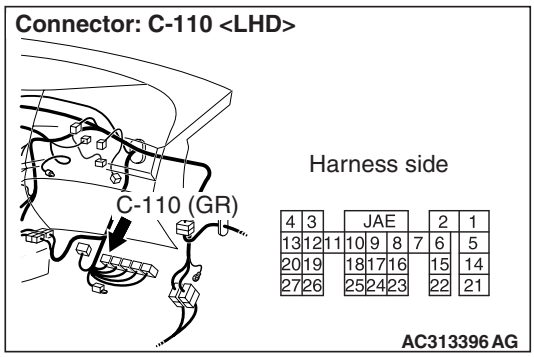

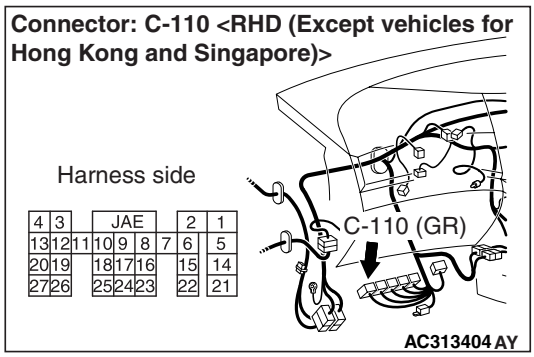

Q: Is the check result normal?

YES : Go to Step 5.

NO : Repair the connector.

STEP 5. Voltage measurement at B-120 A/C compressor assembly connector.

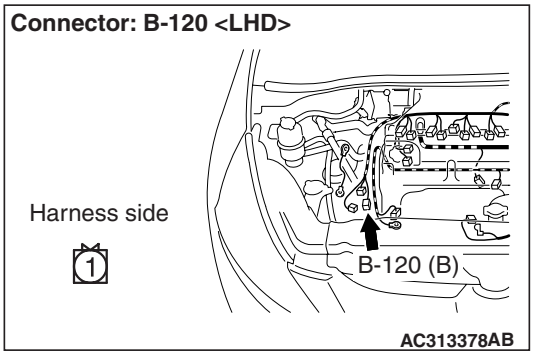

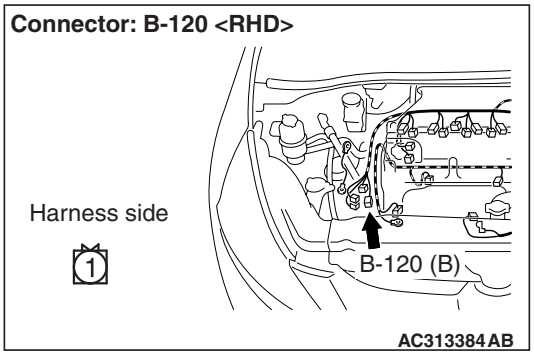

(1) Disconnect the connector, and measure at the wiring harness side.
(2) Turn the ignition switch to the "ON" position.

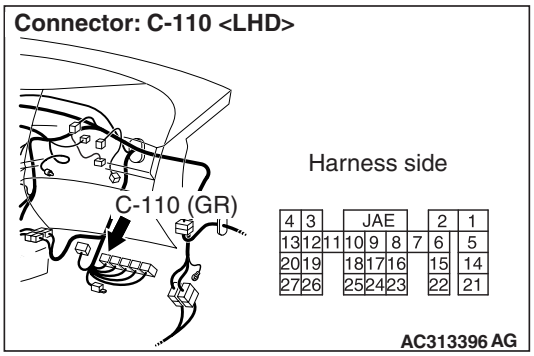

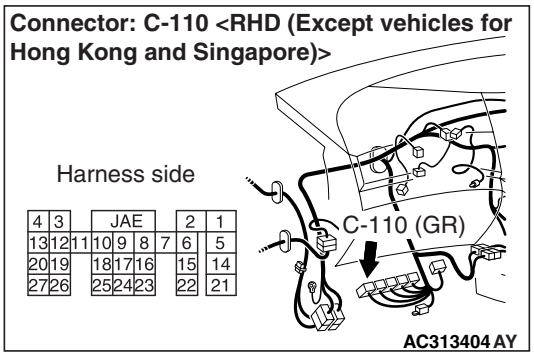

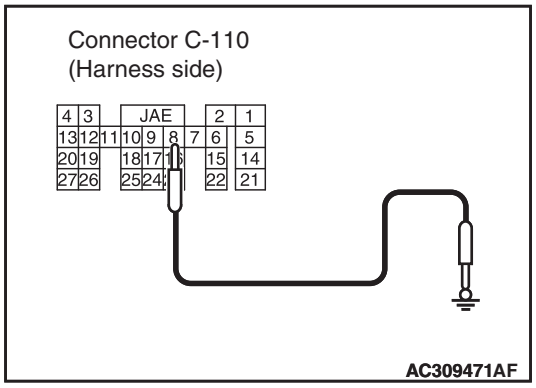

(3) Disconnect engine-ECU connector or engine-A/T-ECU connector C-110 and earth terminal 8. <Except vehicles for GCC>

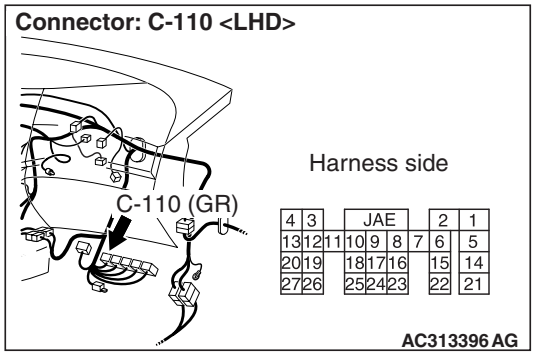

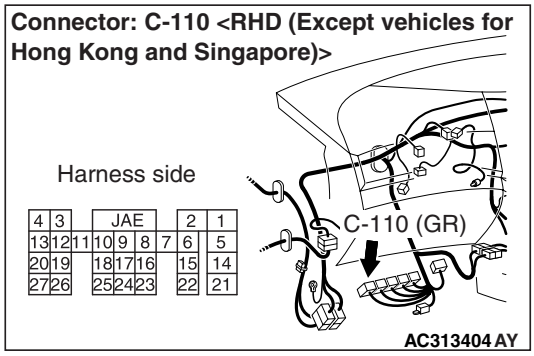

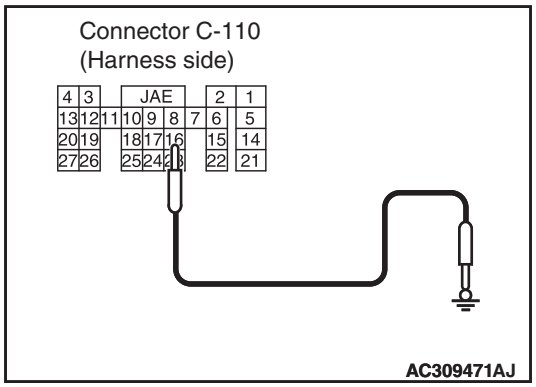

(4) Disconnect engine-ECU connector or engine-A/T-ECU connector C-110 and earth terminal 16. <Vehicles for GCC>

Main Index
Group TOC

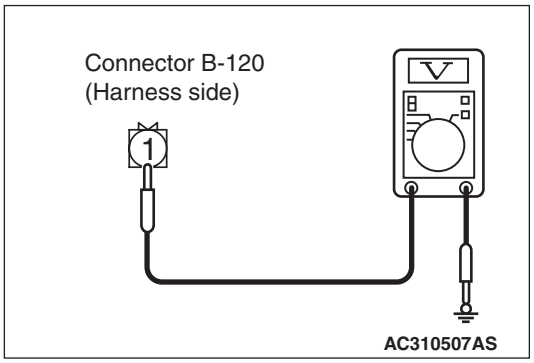

(5) Voltage between terminal 1 and body earth.

OK: System voltage

Q: Is the check result normal?
YES : Go to Step 13.
NO : Go to Step 6.

STEP 6. Check the A/C compressor relay continuity.

Refer to P.55-208.

Q: Is the A/C compressor relay in good condition?
YES : Go to Step 7.
NO : Replace the A/C compressor relay.

STEP 7. Voltage measurement at B-16X A/C compressor relay connector.

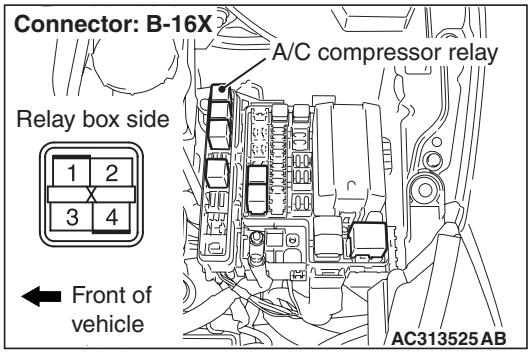

(1) Remove the relay, and measure at the relay block side.
(2) Turn the ignition switch to the "ON" position.

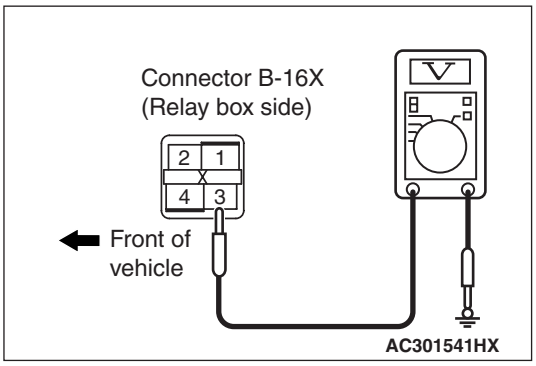

(3) Voltage between terminal 3 and body earth.

OK: System voltage

Q: Is the check result normal?
YES : Go to Step 9.
NO : Go to Step 8.

Main Index
Group TOC

STEP 8. Check the wiring harness between B-16X A/C compressor relay connector terminal No.3 and the ignition switch (IG2).

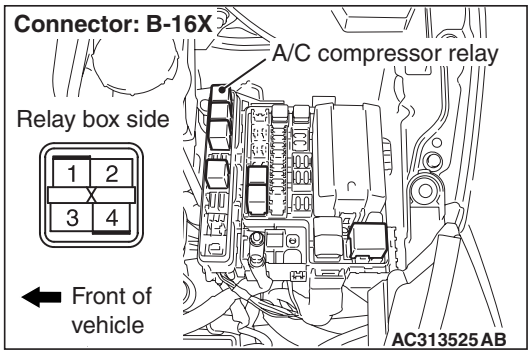

NOTE:

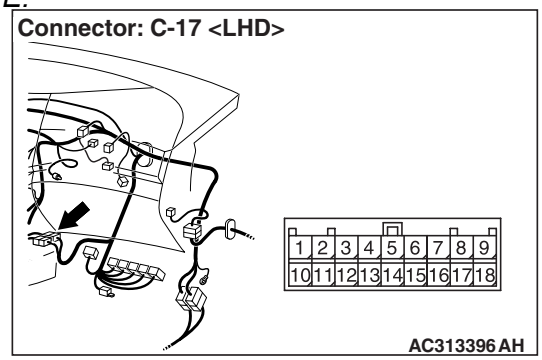

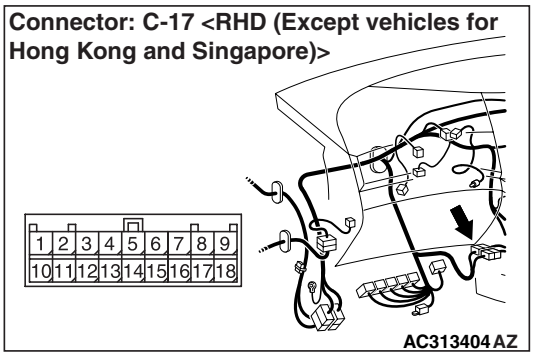

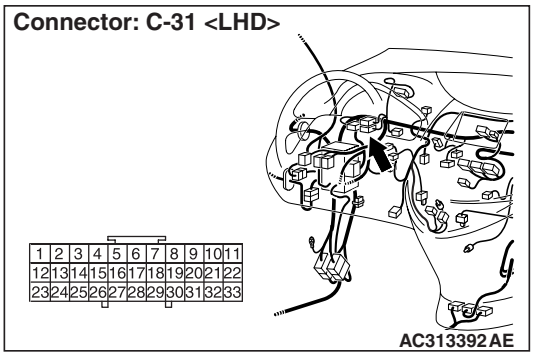

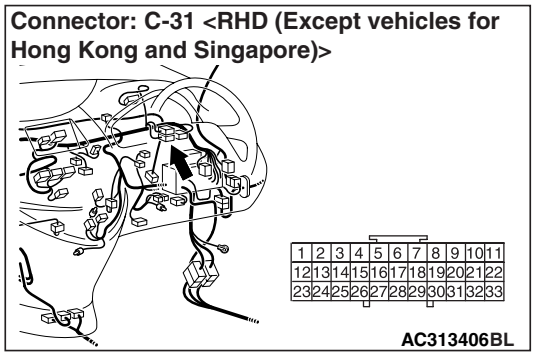

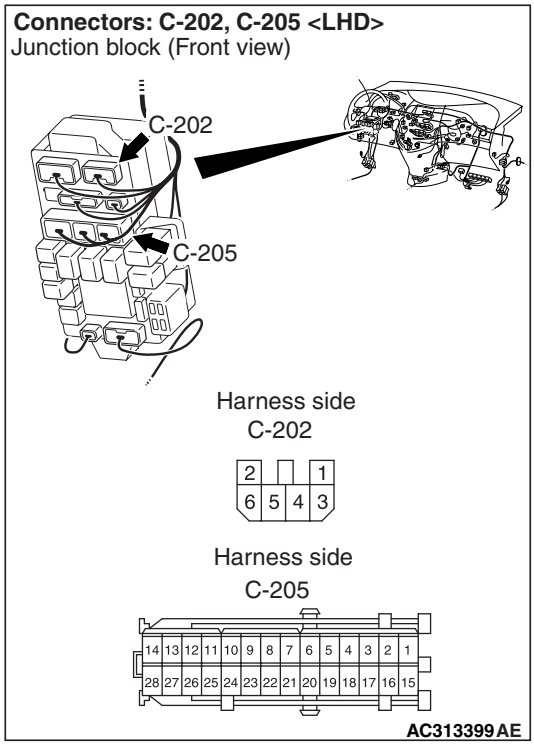

Main Index
Group TOC

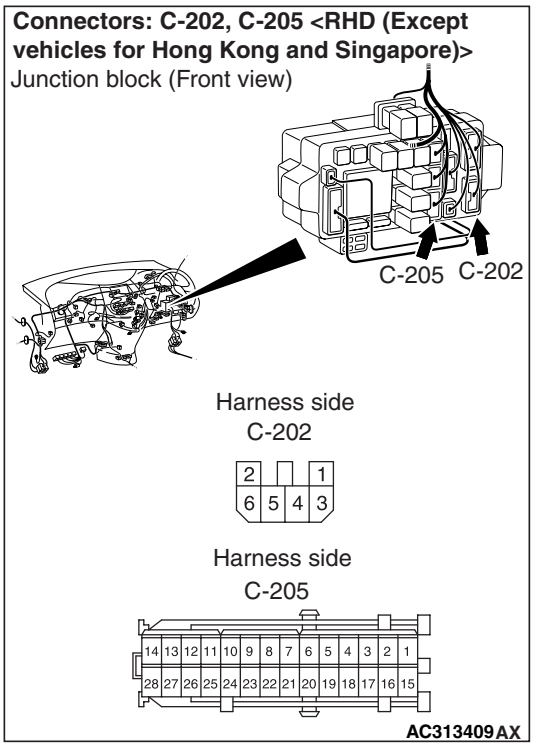

Prior to the wiring harness inspection, check junction block connectors C-202, C-205, joint connector C-31 and intermediate connector C-17, and repair if necessary.

- Check the A/C compressor relay power supply line for open circuit.

Q: Is the check result normal?

YES : The trouble can be an intermittent malfunction (Refer to GROUP 00, How to Cope with Intermittent Malfunction P.00-5).

NO : Repair the wiring harness.

STEP 9. Voltage measurement at B-16X A/C compressor relay connector.

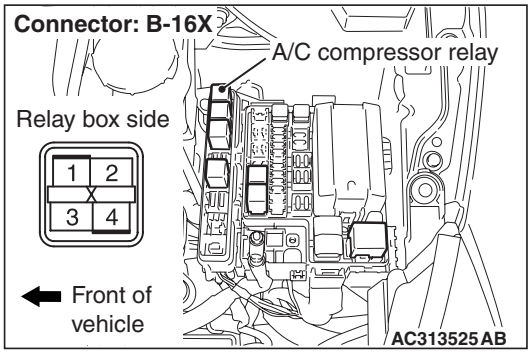

(1) Remove the relay, and measure at the relay block side.

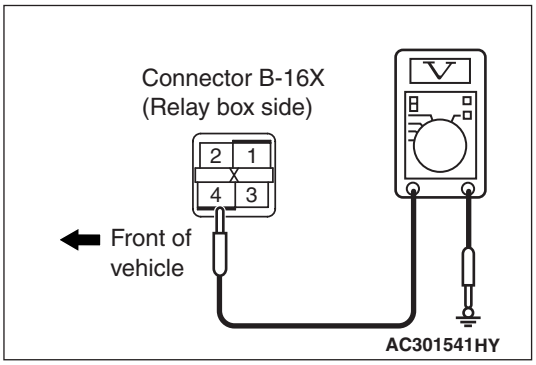

(2) Voltage between terminal 4 and body earth.

OK: System voltage

Q: Is the check result normal?

YES : Go to Step 11.

NO : Go to Step 10.

Main Index
Group TOC

STEP 10. Check the wiring harness between B-16X A/C compressor relay connector terminal No.4 and the fusible link (26).

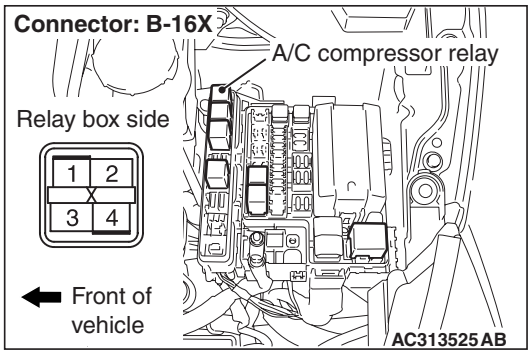

NOTE:

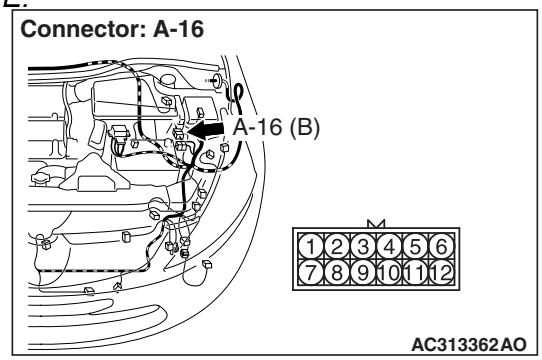

Prior to the wiring harness inspection, check intermediate connector A-16, and repair if necessary.

- Check the A/C compressor relay power supply line for open circuit.

Q: Is the check result normal?

YES : The trouble can be an intermittent malfunction (Refer to GROUP 00, How to Cope with Intermittent Malfunction P.00-5).

NO : Repair the wiring harness.

STEP 11. Check the wiring harness between B-16X A/C compressor relay connector terminal No.2 and C-110 engine-ECU <M/T> or engine-A/T-ECU <A/T> connector terminal No.8.

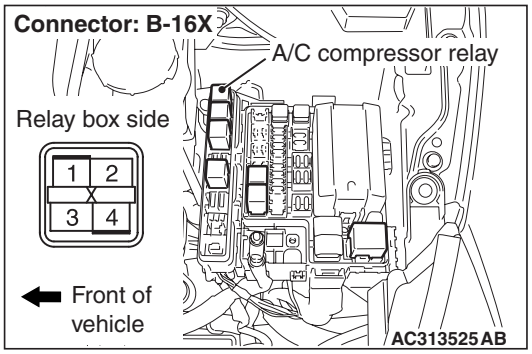

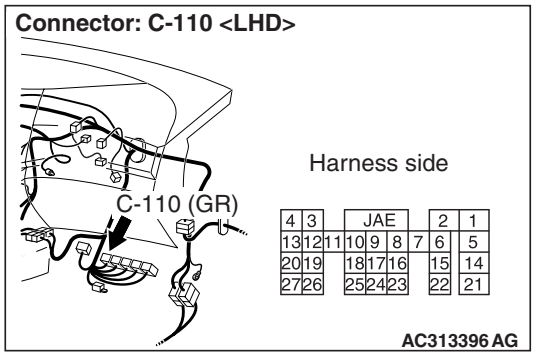

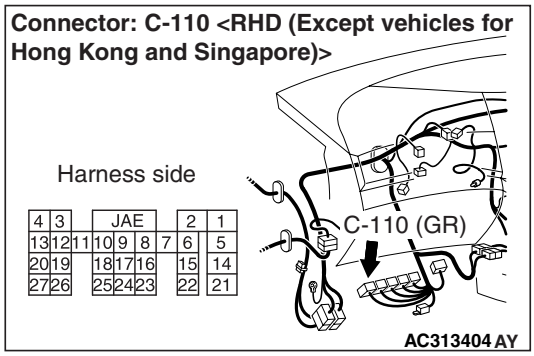

- Check the A/C compressor relay power supply line for open circuit.

Q: Is the check result normal?

YES : Go to Step 12.

NO : Repair the wiring harness.

Main Index
Group TOC

STEP 12. Check the wiring harness between B-16X A/C compressor relay connector terminal No.1 and B-120 A/C compressor assembly connector terminal No.1.

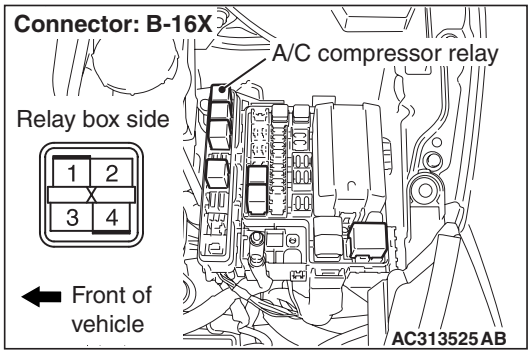

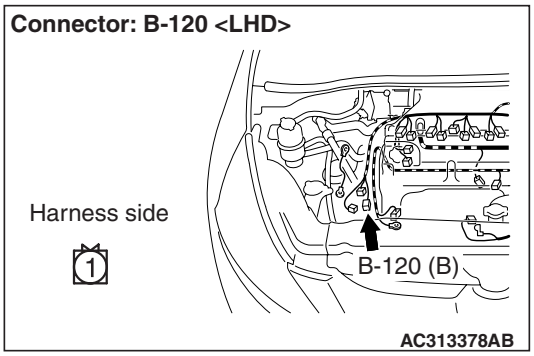

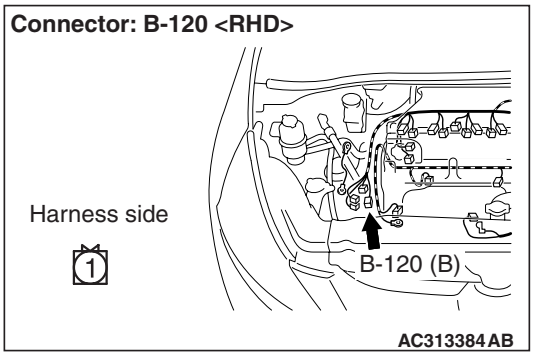

- Check the A/C compressor power supply line for open circuit.

Q: Is the check result normal?
YES : The trouble can be an intermittent malfunction (Refer to GROUP 00, How to Cope with Intermittent Malfunction P.00-5).
NO : Repair the wiring harness.

STEP 13. Check the magnetic clutch operation.
Refer to P.55-237.

Q: Can the sound of the magnetic clutch (click) be heard?
YES : Go to Step 14.
NO : Replace the compressor magnet clutch.

STEP 14. Check the refrigerant level.
Refer to P.55-206.

Q: Is the refrigerant level correct?
YES : Go to Step 15.
NO : Correct the refrigerant level (Refer to P.55-206).

STEP 15. Replace the A/C-ECU, and then recheck the trouble symptom
Check that the compressor works normally.

Q: Is the check result normal?
YES : This diagnosis is complete.
NO : Replace the engine-ECU or the engine-A/T-ECU.

Main Index
Group TOC

Inspection Procedure 8: The compressor does not work <Vehicles for Hong Kong and Singapore)>

A/C Compressor Assembly Circuit

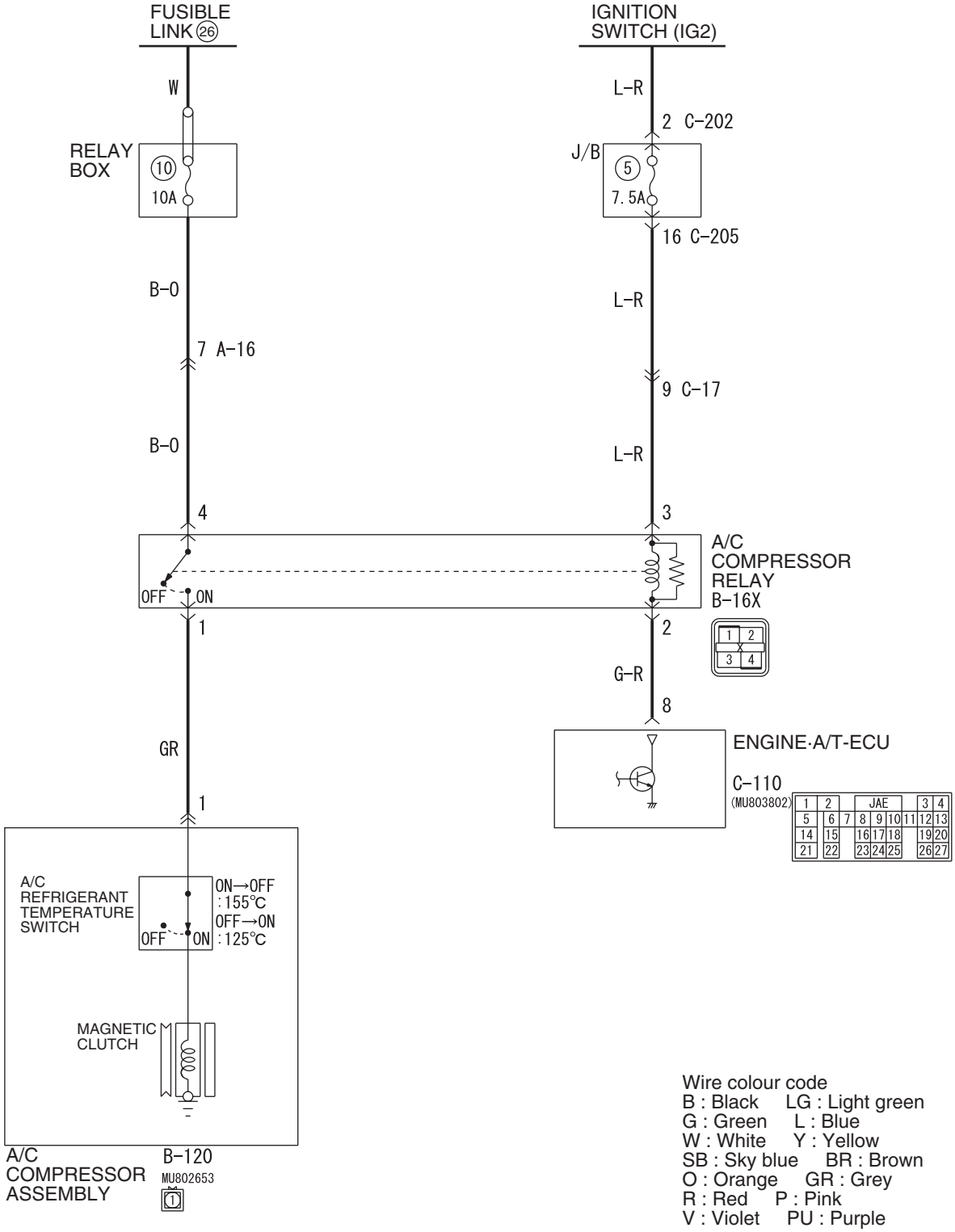

Wire colour code
B : Black LG : Light green
G : Green L : Blue
W : White Y : Yellow
SB : Sky blue BR : Brown
O : Orange GR : Grey
R : Red P : Pink
V : Violet PU : Purple

W6X55X004A

Main Index
Group TOC

COMMENTS ON TROUBLE SYMPTOM

When the A/C compressor does not work, the A/C compressor circuit system or the CAN bus line may be defective.

PROBABLE CAUSES

- Malfunction of A/C compressor
- Malfunction of A/C compressor relay
- Malfunction of A/C pressure sensor
- Damaged harness wires and connectors
- Malfunction of engine-ECU <M/T> or engine-A/T-ECU <A/T>
- Malfunction of the A/C-ECU

DIAGNOSIS PROCEDURE

STEP 1. M.U.T.-III CAN bus diagnostics

Use the M.U.T.-III to diagnose the CAN bus lines.

Q: Is the check result normal?

YES : Go to Step 2.

NO : Repair the CAN bus lines. (Refer to GROUP 54F – Troubleshooting P.54F-13.)

STEP 2. M.U.T.-III diagnosis code

Check whether the air conditioner sets a diagnosis code or not.

Q: Is the check result normal?

YES : Go to Step 3.

NO : Refer to diagnosis code chart P.55-8.

STEP 3. M.U.T.-III data list

Check that the following service data display contents are normal. (Refer to P.55-198.)

- Item 04: Pressure sensor

Q: Is the check result normal?

YES : Go to Step 4.

NO : Inspection Procedure 21: Refer to A/C pressure sensor system <Vehicles for Hong Kong and Singapore>P.55-150 .

STEP 4. Connector check: B-120 A/C compressor assembly connector and C-110 engine-ECU connector <M/T> or engine-A/T-ECU <A/T>

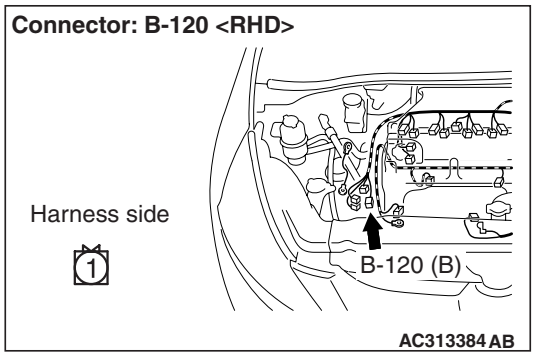

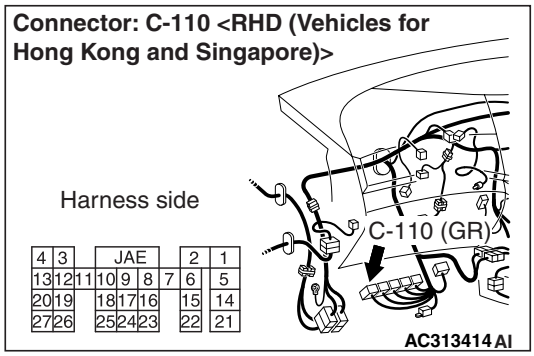

Q: Is the check result normal?

YES : Go to Step 5.

NO : Repair the connector.

STEP 5. Voltage measurement at B-120 A/C compressor assembly connector.

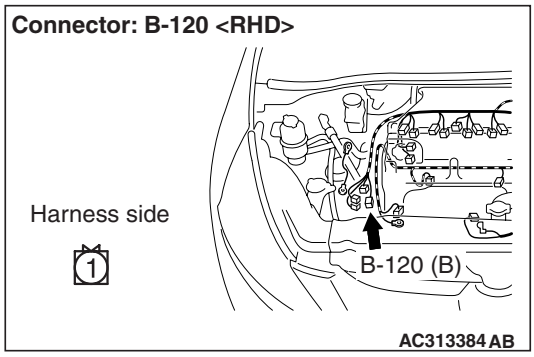

(1) Disconnect the connector, and measure at the wiring harness side.

Main Index
Group TOC

(2) Turn the ignition switch to the "ON" position.

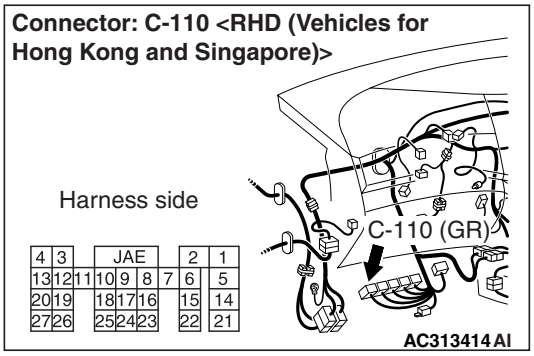

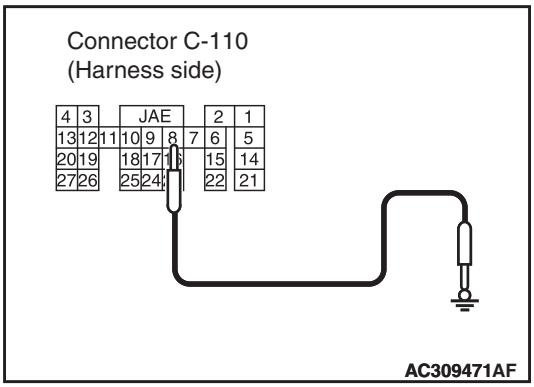

(3) Disconnect engine-ECU connector or engine-A/T-ECU connector C-110 and earth terminal 8.

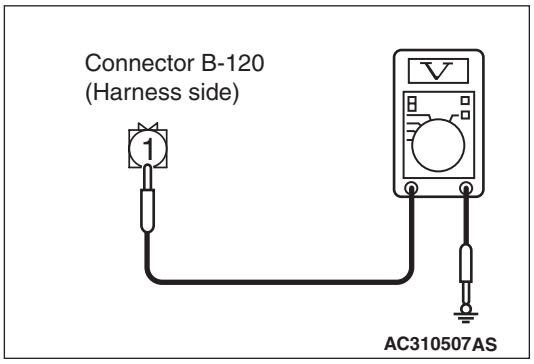

(4) Voltage between terminal 1 and body earth.

OK: System voltage

Q: Is the check result normal?

YES : Go to Step 13.

NO : Go to Step 6.

STEP 6. Check the A/C compressor relay continuity.

Refer to P.55-208.

Q: Is the A/C compressor relay in good condition?

YES : Go to Step 7.

NO : Replace the A/C compressor relay.

STEP 7. Voltage measurement at B-16X A/C compressor relay connector.

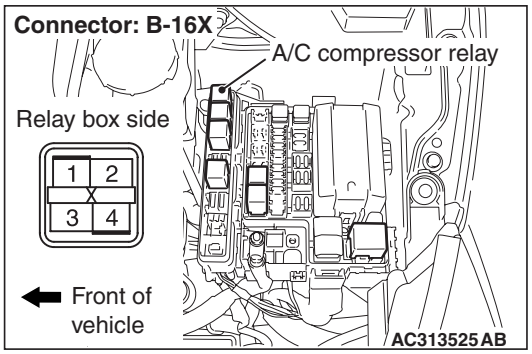

(1) Remove the relay, and measure at the relay block side.

(2) Turn the ignition switch to the "ON" position.

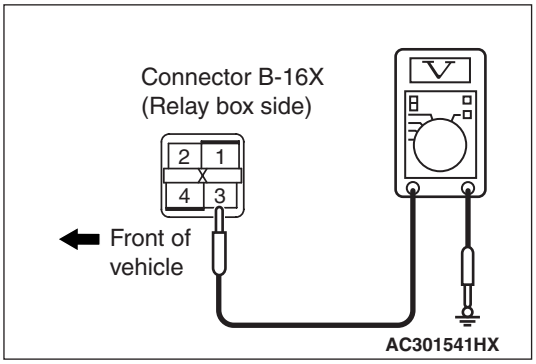

(3) Voltage between terminal 3 and body earth.

OK: System voltage

Q: Is the check result normal?

YES : Go to Step 9.

NO : Go to Step 8.

Main Index
Group TOC

STEP 8. Check the wiring harness between B-16X A/C compressor relay connector terminal No.3 and the ignition switch (IG2).

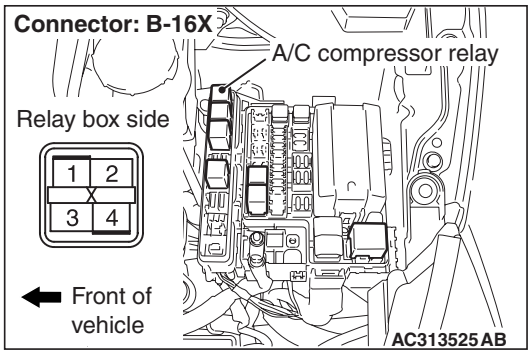

NOTE:

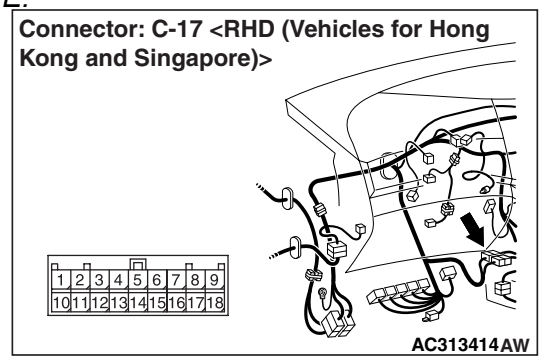

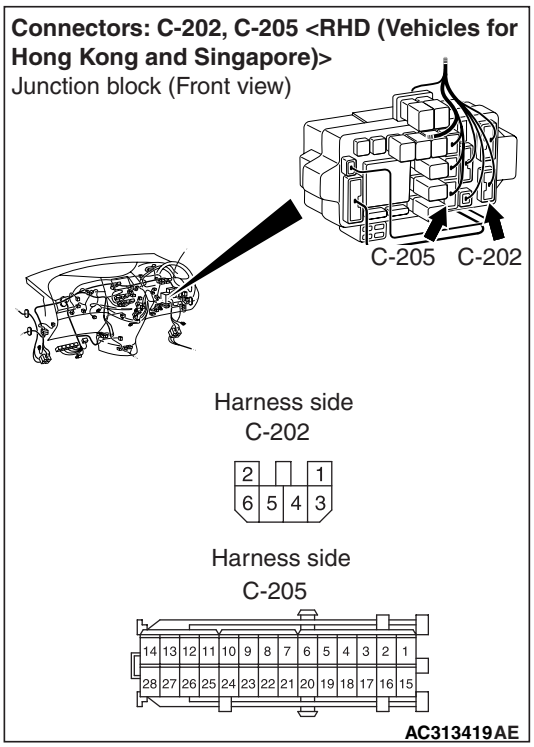

Prior to the wiring harness inspection, check junction block connectors C-202, C-205 and intermediate connector C-17, and repair if necessary.

- Check the A/C compressor relay power supply line for open circuit.

Q: Is the check result normal?

YES : The trouble can be an intermittent malfunction (Refer to GROUP 00, How to Cope with Intermittent Malfunction P.00-5).

NO : Repair the wiring harness.

STEP 9. Voltage measurement at B-16X A/C compressor relay connector.

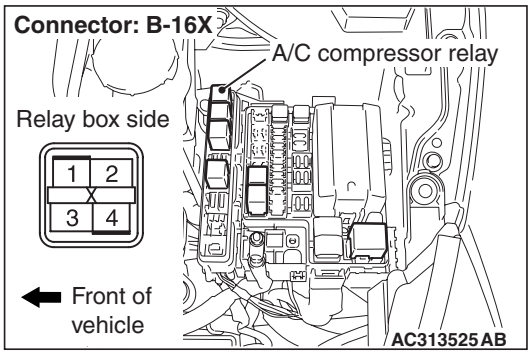

(1) Remove the relay, and measure at the relay block side.

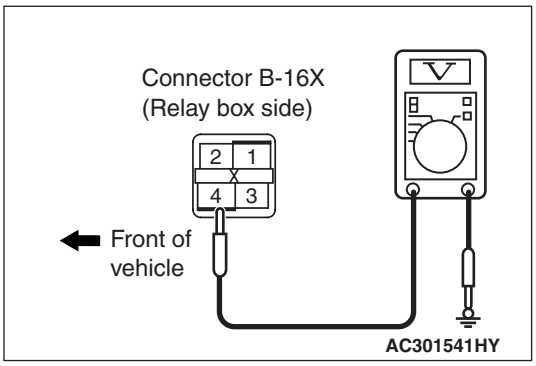

(2) Voltage between terminal 4 and body earth.

OK: System voltage

Q: Is the check result normal?

YES : Go to Step 11.

NO : Go to Step 10.

Main Index
Group TOC

STEP 10. Check the wiring harness between B-16X A/C compressor relay connector terminal No.4 and the fusible link (26).

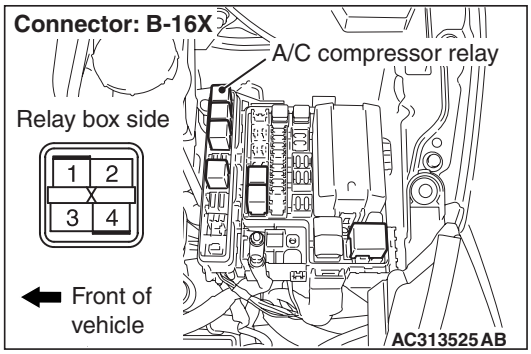

NOTE:

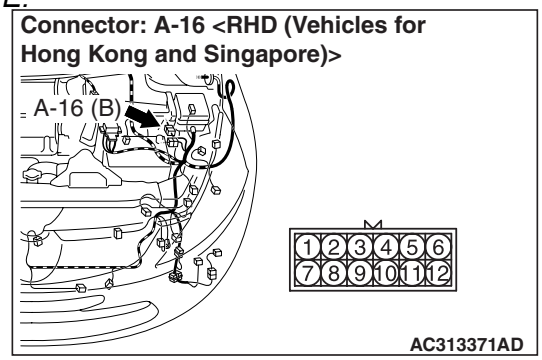

Prior to the wiring harness inspection, check intermediate connector A-16, and repair if necessary.

- Check the A/C compressor relay power supply line for open circuit.

Q: Is the check result normal?

YES : The trouble can be an intermittent malfunction (Refer to GROUP 00, How to Cope with Intermittent Malfunction P.00-5).

NO : Repair the wiring harness.

STEP 11. Check the wiring harness between B-16X A/C compressor relay connector terminal No.2 and C-110 engine-ECU <M/T> or engine-A/T-ECU <A/T> connector terminal No.8.

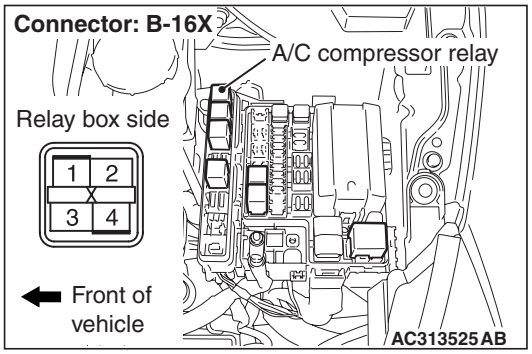

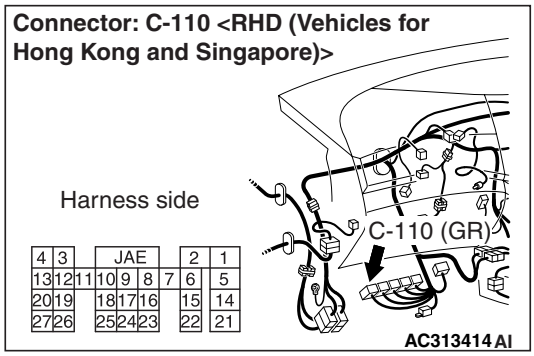

- Check the A/C compressor relay power supply line for open circuit.

Q: Is the check result normal?

YES : Go to Step 12.

NO : Repair the wiring harness.

Main Index
Group TOC

STEP 12. Check the wiring harness between B-16X A/C compressor relay connector terminal No.1 and B-120 A/C compressor assembly connector terminal No.1.

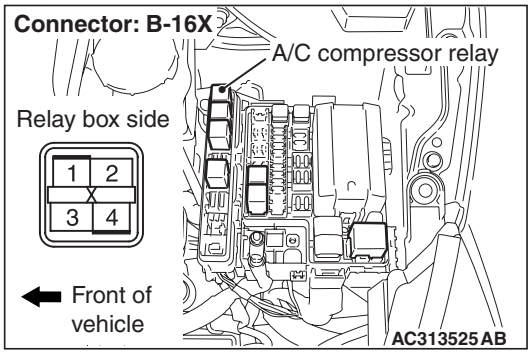

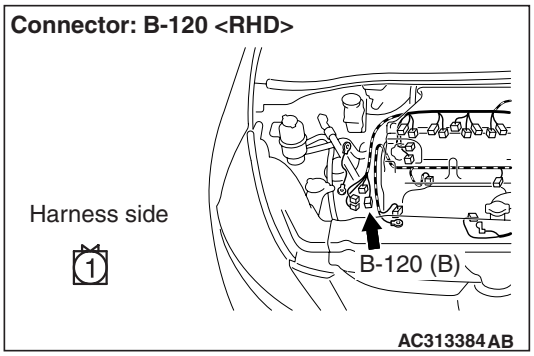

- Check the A/C compressor power supply line for open circuit.

Q: Is the check result normal?
YES : The trouble can be an intermittent malfunction (Refer to GROUP 00, How to Cope with Intermittent Malfunction P.00-5).
NO : Repair the wiring harness.

STEP 13. Check the magnetic clutch operation.
Refer to P.55-237.

Q: Can the sound of the magnetic clutch (click) be heard?
YES : Go to Step 14.
NO : Replace the compressor magnet clutch.

STEP 14. Check the refrigerant temperature switch.
Refer to P.55-240.

Q: Is the refrigerant temperature switch operating properly?
YES : Go to Step 15.
NO : Replace the refrigerant temperature switch.

STEP 15. Check the refrigerant level.
Refer to P.55-206.

Q: Is the refrigerant level correct?
YES : Go to Step 16.
NO : Correct the refrigerant level (Refer to P.55-206).

STEP 16. Replace the A/C-ECU, and then recheck the trouble symptom
Check that the compressor works normally.

Q: Is the check result normal?
YES : This diagnosis is complete.
NO : Replace the engine-ECU or the engine-A/T-ECU.

Main Index
Group TOC

Inspection Procedure 9: The outlet air temperature can not be changed even if the amount of solar radiation changes <Except vehicles for Hong Kong and Singapore>

Photo Sensor Circuit

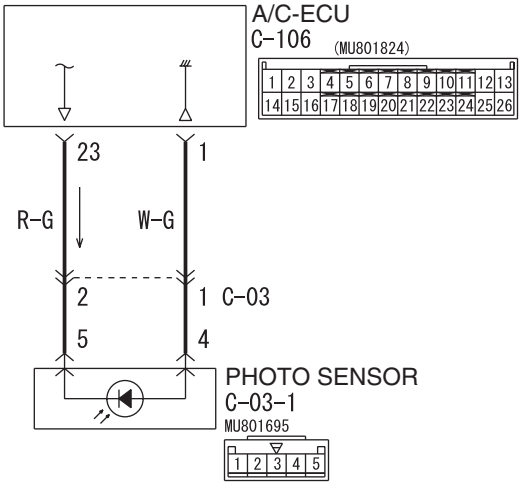

Wire colour code
B : Black LG : Light green G : Green L : Blue W : White Y : Yellow SB : Sky blue
BR : Brown O : Orange GR : Grey R : Red P : Pink V : Violet PU : Purple

W6X55X005A

CIRCUIT OPERATION

When the blower air temperature can not be changed even if the amount of solar radiation is changed, the photo sensor may be defective.

PROBABLE CAUSES

- Malfunction of photo sensor
- Damaged harness wires and connectors
- Malfunction of the A/C-ECU

DIAGNOSIS PROCEDURE

STEP 1. M.U.T.-III diagnosis code.

Check whether the air conditioner sets a diagnosis code or not.

Q: Is the check result normal?

YES : Go to Step 2.
NO : Refer to diagnosis code chart P.55-8.

STEP 2. M.U.T.-III data list.

Check that the following service data display contents are normal. (Refer to P.55-198.)

- Item 06: Photo sensor

Q: Is the check result normal?

YES : Go to Step 3.
NO : Go to Step 4.

STEP 3. Recheck the trouble symptom

Q: Is the check result normal?

YES : The trouble can be an intermittent malfunction (Refer to GROUP 00, How to Cope with Intermittent Malfunction P.00-5).
NO : Replace the automatic air conditioner control panel (A/C-ECU).

Main Index
Group TOC

STEP 4. Connector check: C-03 photo sensor connector and C-106 A/C-ECU connector

Connectors: C-03, C-106 <LHD>

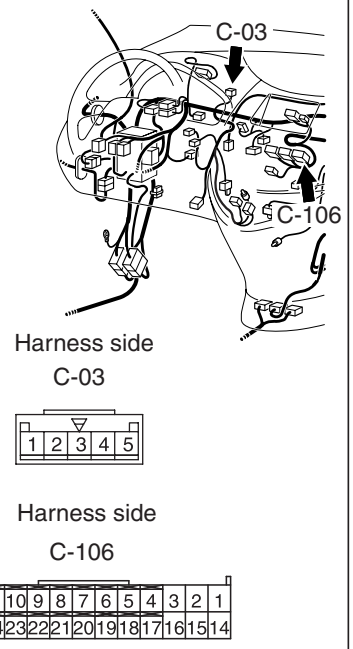

AC313393AJ

Connectors: C-03, C-106 <RHD (Except vehicles for Hong Kong and Singapore)>

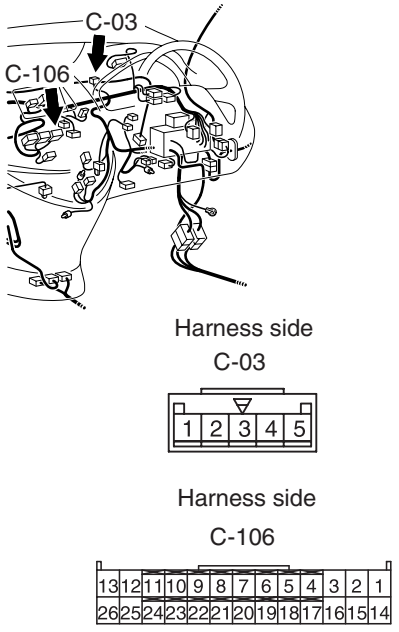

AC313407AH

Q: Is the check result normal?
YES : Go to Step 5.
NO : Repair the connector.

STEP 5. Check the wiring harness between C-03 photo sensor connector (terminal 1 and 2) and C-106 A/C-ECU connector (terminal 1 and 23).

Connectors: C-03, C-106 <LHD>

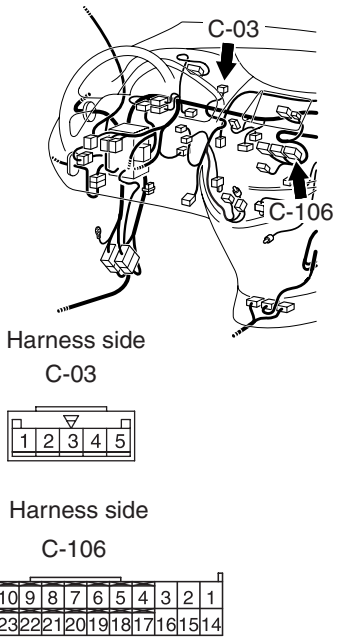

AC313393AJ

Connectors: C-03, C-106 <RHD (Except vehicles for Hong Kong and Singapore)>

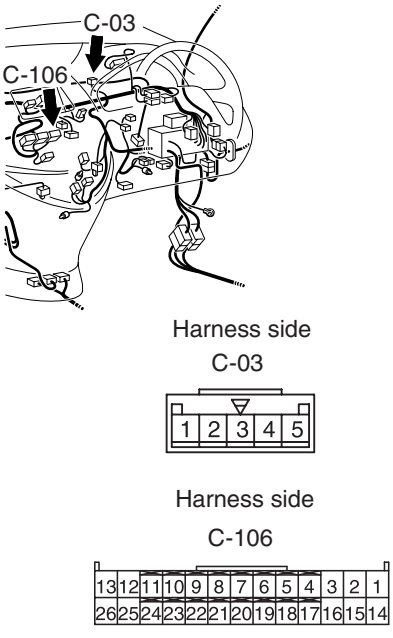

AC313407AH

- Check the A/C compressor relay power supply line for open circuit.

Q: Is the check result normal?
YES : Go to Step 6.
NO : Repair the wiring harness. Check that the air conditioner works normally.

Main Index
Group TOC

STEP 6. Replace the photo sensor and recheck the trouble symptom

Check that the air conditioner works normally.

Q: Is the check result normal?

YES : This diagnosis is complete.

NO : Replace the automatic air conditioner control panel (A/C-ECU).

Inspection Procedure 10: The outlet air temperature can not be changed even if the amount of solar radiation changes <Vehicles for Hong Kong and Singapore>

Photo Sensor Circuit

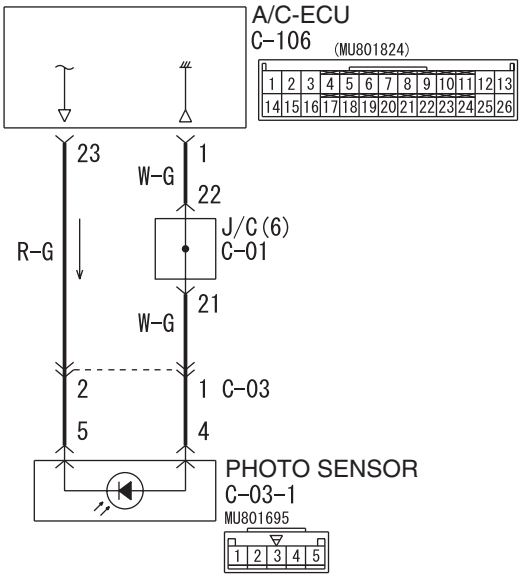

Wire colour code
B : Black LG : Light green G : Green L : Blue W : White Y : Yellow SB : Sky blue
BR : Brown O : Orange GR : Grey R : Red P : Pink V : Violet PU : Purple

W6X55X006A

CIRCUIT OPERATION

When the blower air temperature can not be changed even if the amount of solar radiation is changed, the photo sensor may be defective.

PROBABLE CAUSES

- Malfunction of photo sensor
- Damaged harness wires and connectors
- Malfunction of the A/C-ECU

DIAGNOSIS PROCEDURE

STEP 1. M.U.T.-III diagnosis code.

Check whether the air conditioner sets a diagnosis code or not.

Q: Is the check result normal?

YES : Go to Step 2.

NO : Refer to diagnosis code chart P.55-8.

Main Index
Group TOC

STEP 2. M.U.T.-III data list.

Check that the following service data display contents are normal. (Refer to P.55-198.)

- Item 06: Photo sensor

Q: Is the check result normal?

YES : Go to Step 3.

NO : Go to Step 4.

STEP 3. Recheck the trouble symptom

Q: Is the check result normal?

YES : The trouble can be an intermittent malfunction (Refer to GROUP 00, How to Cope with Intermittent Malfunction P.00-5).

NO : Replace the automatic air conditioner control panel (A/C-ECU).

STEP 4. Connector check: C-03 photo sensor connector and C-106 A/C-ECU connector

Connectors: C-03, C-106 <RHD (Vehicles for Hong Kong and Singapore)>

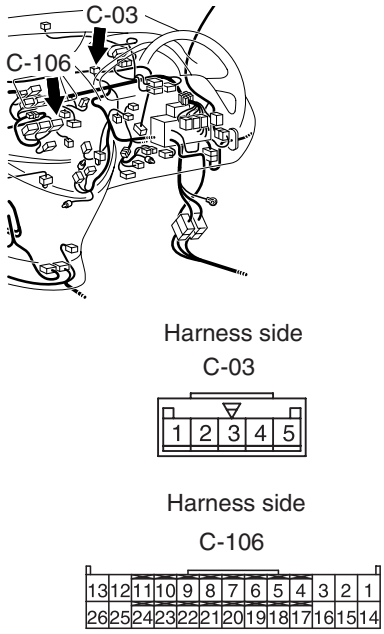

AC313417AJ

Q: Is the check result normal?

YES : Go to Step 5.

NO : Repair the connector.

STEP 5. Check the wiring harness between C-03 photo sensor connector (terminal 1 and 2) and C-106 A/C-ECU connector (terminal 1 and 23).

Connectors: C-03, C-106 <RHD (Vehicles for Hong Kong and Singapore)>

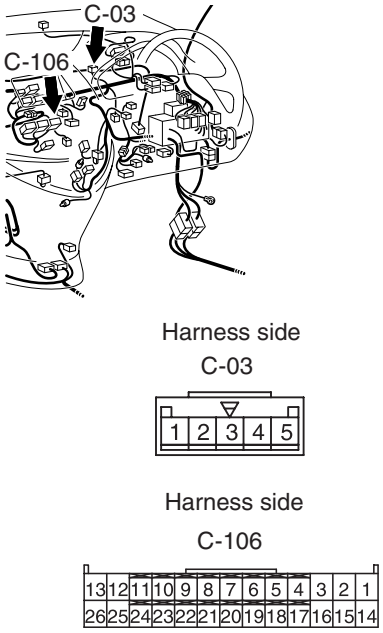

AC313417AJ

- Check the A/C compressor relay power supply line for open circuit.

Q: Is the check result normal?

YES : Go to Step 6.

NO : Repair the wiring harness. Check that the air conditioner works normally.

STEP 6. Replace the photo sensor and recheck the trouble symptom

Check that the air conditioner works normally.

Q: Is the check result normal?

YES : This diagnosis is complete.

NO : Replace the automatic air conditioner control panel (A/C-ECU).

Main Index
Group TOC

Inspection Procedure 11: The PTC heater does not work <Except vehicles for Hong Kong and Singapore>

PTC Heater Circuit

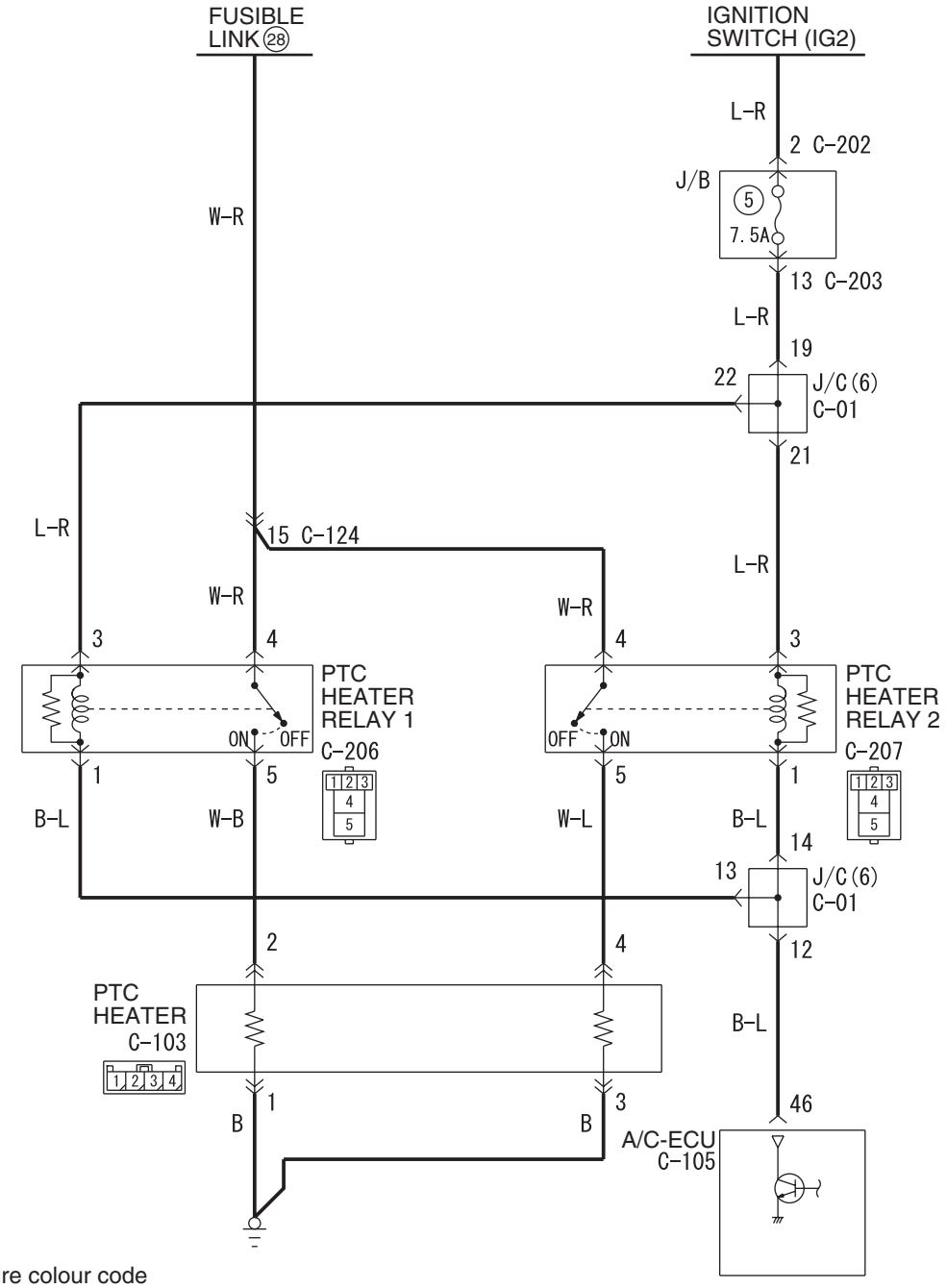

Wire colour code
B : Black LG : Light green G : Green L : Blue W : White Y : Yellow SB : Sky blue
BR : Brown O : Orange GR : Grey R : Red P : Pink V : Violet PU : Purple

W6X55X007A

COMMENTS ON TROUBLE SYMPTOM

When the PTC heater does not work under the following conditions, the PTC heater switch system or the PTC heater circuit system may be defective.

PTC heater operating conditions

- PTC heater switch: ON
- Air outlet: FOOT/DEF, FOOT, FACE/FOOT
- Temperature control dial: MAX HOT

Main Index
Group TOC

- Coolant temperature: 82 degrees Celsius or less

NOTE: When the coolant temperature becomes above 82 degrees Celsius and PTC heater stops the operation, the PTC heater does not operate until coolant temperature becomes below 72 degrees Celsius.

PROBABLE CAUSES

- Malfunction of the PTC heater switch system
- Damaged the wiring harness or connectors
- Malfunction of the PTC heater relay 1
- Malfunction of the PTC heater relay 2
- Malfunction of the PTC heater
- Malfunction of the automatic air conditioner control panel (A/C-ECU)

DIAGNOSIS PROCEDURE

STEP 1. M.U.T.-III data list

Check that the following service data display contents are normal. (Refer to P.55-198.)

- Item 35: PTC heater switch

Q: Does the blower motor work normally?
YES : Go to Step 4.
NO : Go to Step 2.

STEP 2. Connector check: C-106 A/C-ECU connector

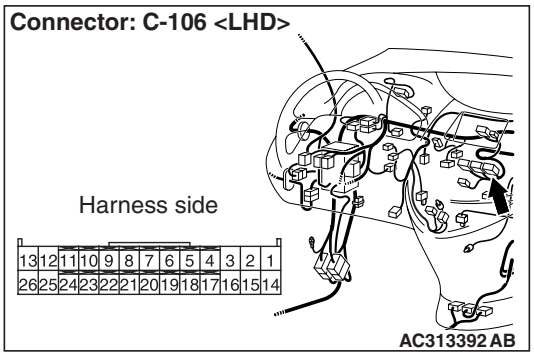

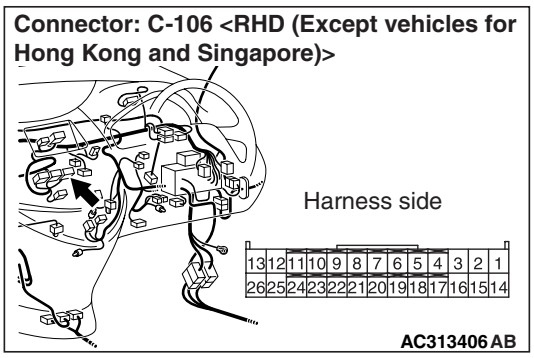

Q: Is the check result normal?
YES : Go to Step 3.
NO : Repair the connector.

STEP 3. Voltage measurement at C-106 A/C-ECU connector.

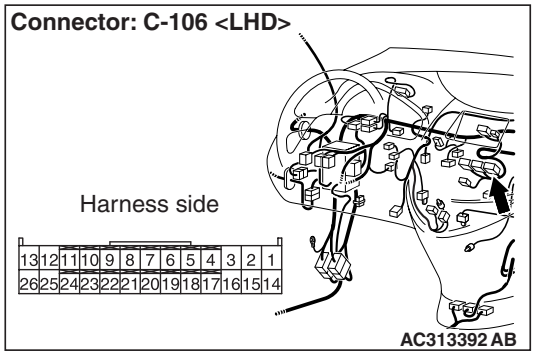

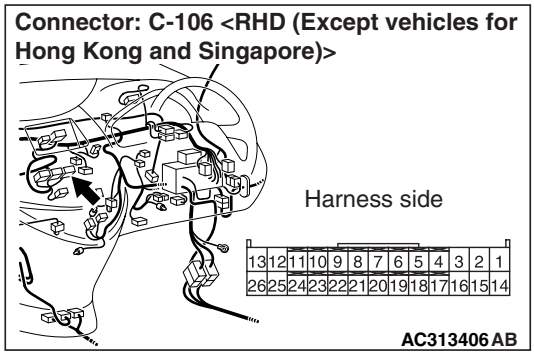

(1) Disconnect the connector, and measure at the wiring harness side.
(2) Turn the ignition switch to the "ON" position.
(3) Turn the PTC heater switch to the "ON" position.

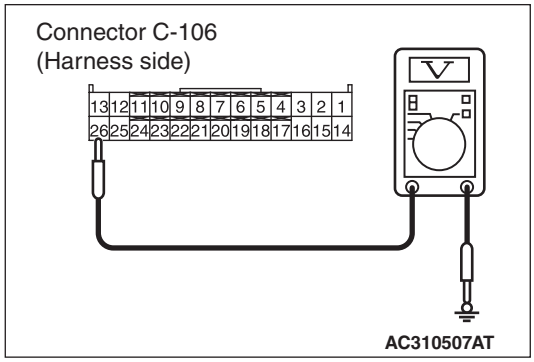

(4) Voltage between terminal 26 and body earth.

OK: System voltage

Q: Is the check result normal?
YES : Go to Step 28.
NO : Inspection Procedure 26: Refer to PTC heater switch system <Except vehicles for Hong Kong and Singapore>P.55-179 .

STEP 4. Connector check: C-103 PTC heater connector

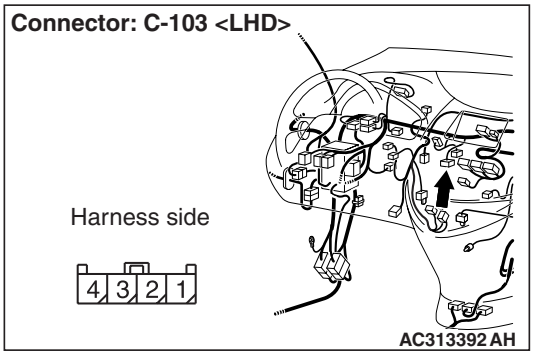

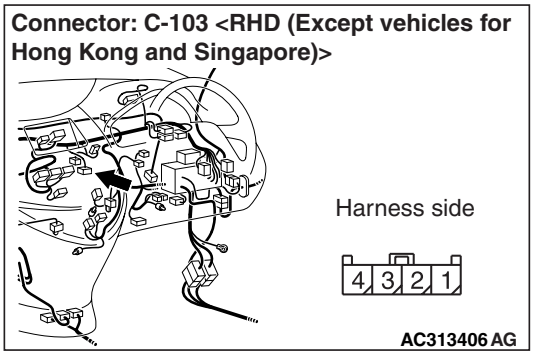

Q: Is the check result normal?
YES : Go to Step 5.
NO : Repair the connector.

STEP 5. Resistance measurement at the C-103 PTC heater connector.

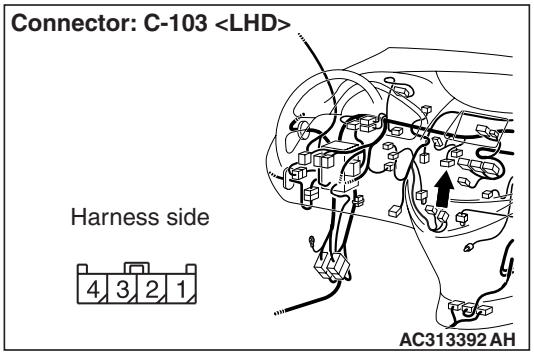

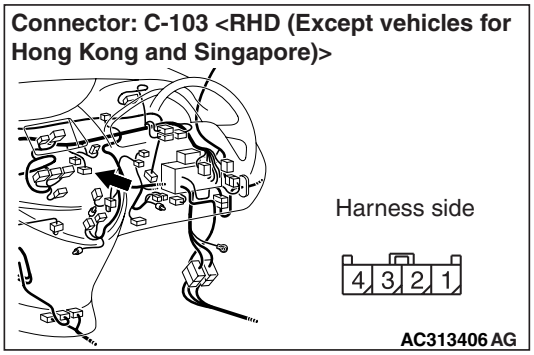

(1) Disconnect the connector, and measure at the wiring harness side.

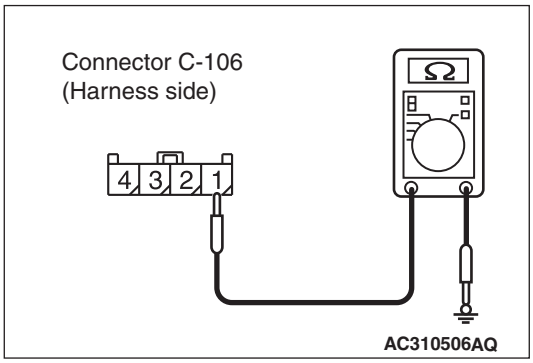

(2) Continuity between terminal 1 and body earth

OK: 2Ω or less

Q: Is the check result normal?
YES : Go to Step 7.
NO : Go to Step 6.

STEP 6. Check the wiring harness between C-103 PTC heater connector terminal No.1 and body earth.

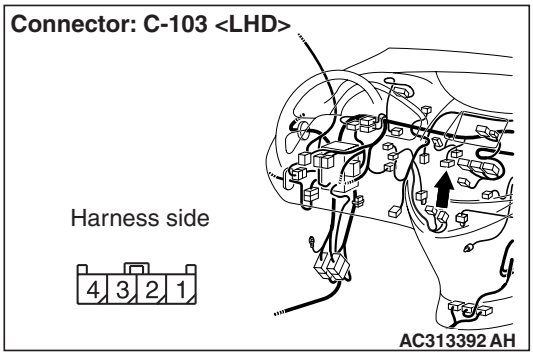

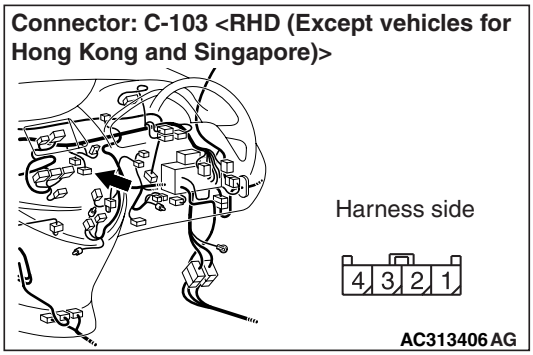

- Check the PTC heater earth line for open circuit.

Q: Is the check result normal?
YES : The trouble can be an intermittent malfunction (Refer to GROUP 00, How to Cope with Intermittent Malfunction P.00-5).
NO : Repair the wiring harness.

Main Index
Group TOC

STEP 7. Resistance measurement at the C-103 PTC heater connector.

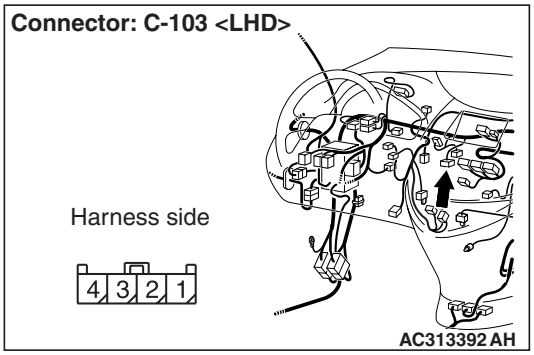

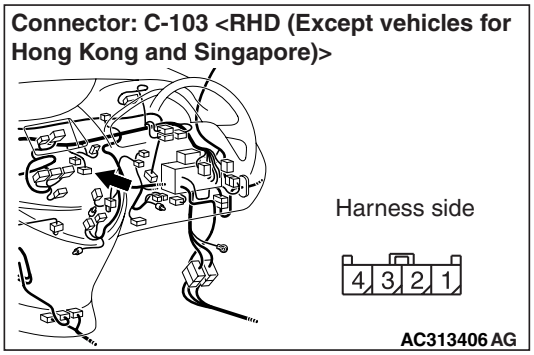

(1) Disconnect the connector, and measure at the wiring harness side.

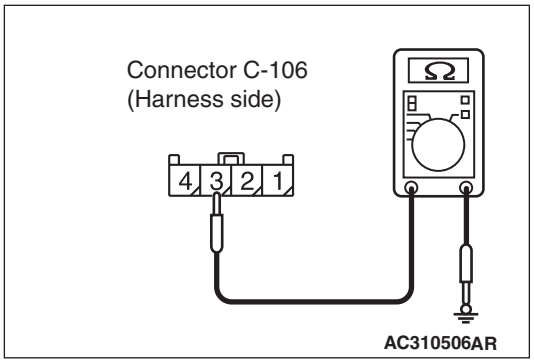

(2) Continuity between terminal 3 and body earth

OK: 2Ω or less

Q: Is the check result normal?

YES : Go to Step 9.

NO : Go to Step 8.

STEP 8. Check the wiring harness between C-103 PTC heater connector terminal No.3 and body earth.

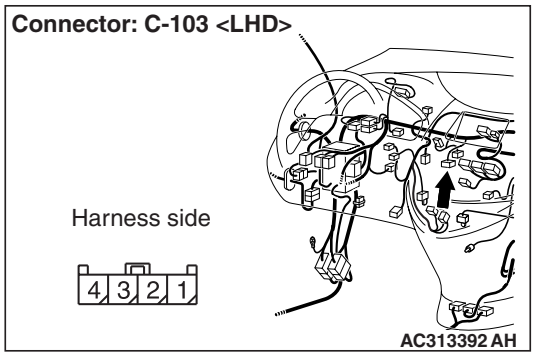

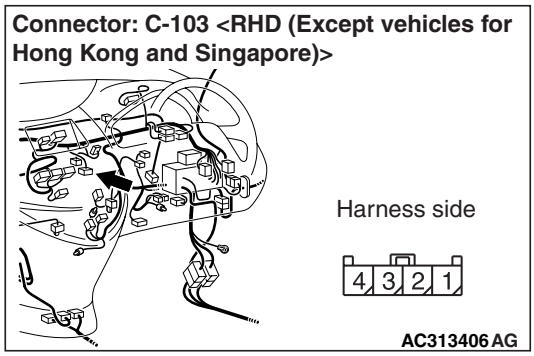

- Check the PTC heater earth line for open circuit.

Q: Is the check result normal?

YES : The trouble can be an intermittent malfunction (Refer to GROUP 00, How to Cope with Intermittent Malfunction P.00-5).

NO : Repair the wiring harness.

STEP 9. Connector check: C-105 A/C-ECU connector

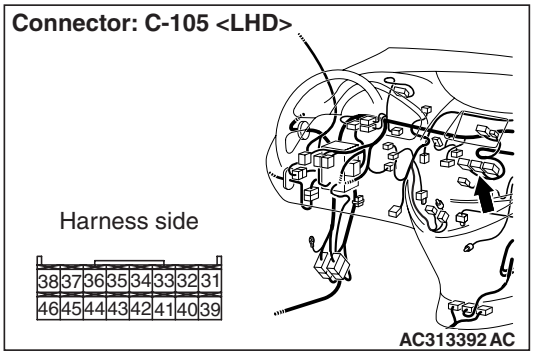

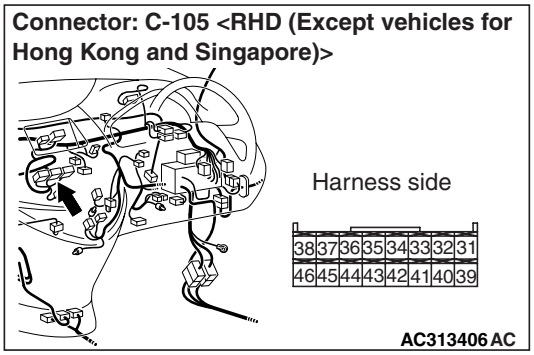

Q: Is the check result normal?
YES : Go to Step 10.
NO : Repair the connector.

STEP 10. Voltage measurement at C-103 PTC heater connector.

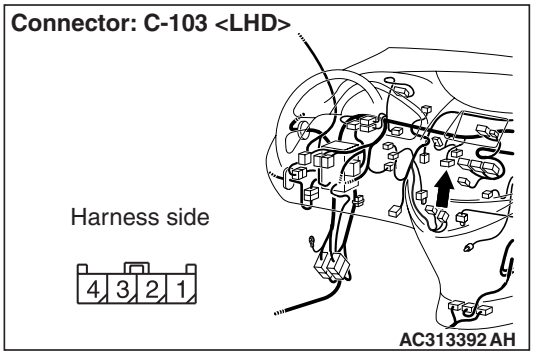

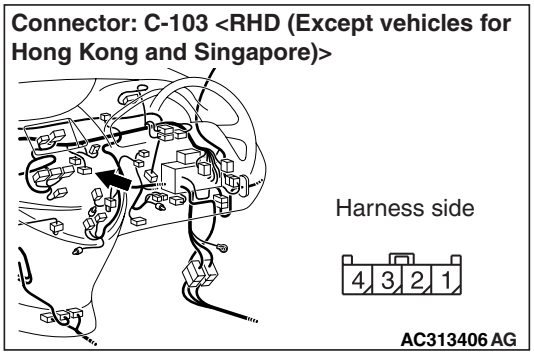

(1) Disconnect the connector, and measure at the wiring harness side.

(2) Turn the ignition switch to the "ON" position.

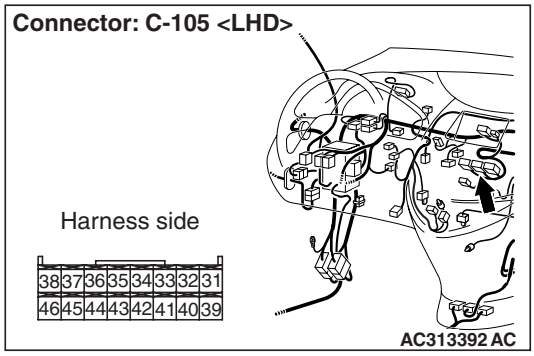

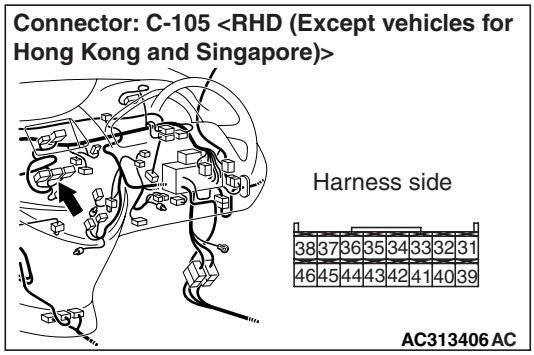

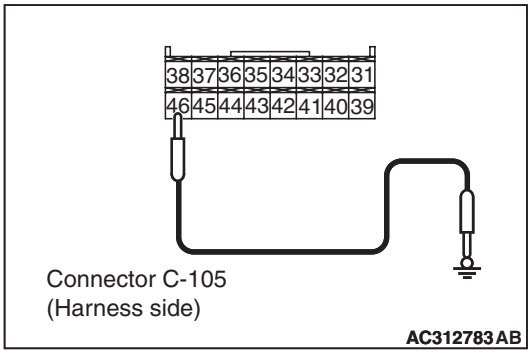

(3) Disconnect A/C-ECU connector C-105 and earth terminal 46.

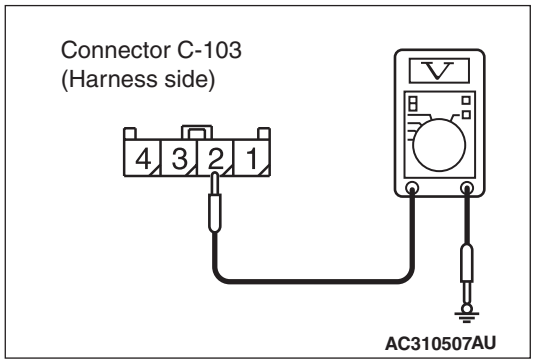

(4) Voltage between terminal 2 and body earth.

OK: System voltage

Q: Is the check result normal?
YES : Go to Step 19.
NO : Go to Step 11.

Main Index
Group TOC

STEP 11. Connector check: C-206 PTC heater relay 1 controller connector

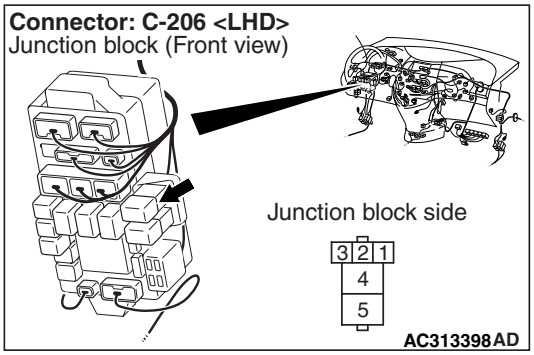

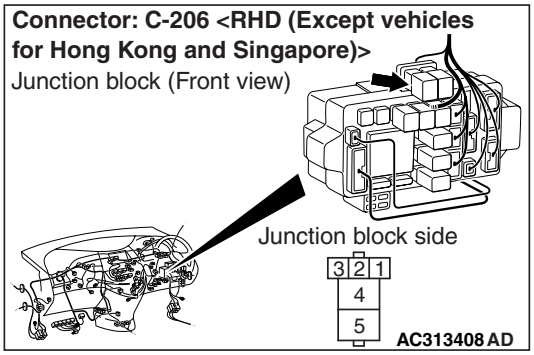

Q: Is the check result normal?
YES : Go to Step 12.
NO : Repair the connector.

STEP 12. Check the PTC heater switch relay 1 continuity.

Refer to P.55-208.

Q: Is the PTC heater switch relay 1 in good condition?
YES : Go to Step 13.
NO : Replace the PTC heater switch relay 1.

STEP 13. Voltage measurement at C-206 PTC heater relay 1 connector.

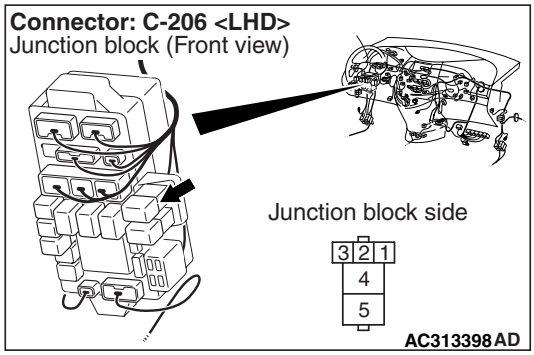

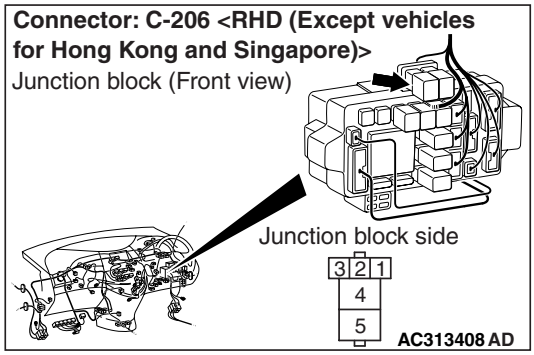

(1) Remove the relay, and measure at the relay block side.
(2) Turn the ignition switch to the "ON" position.

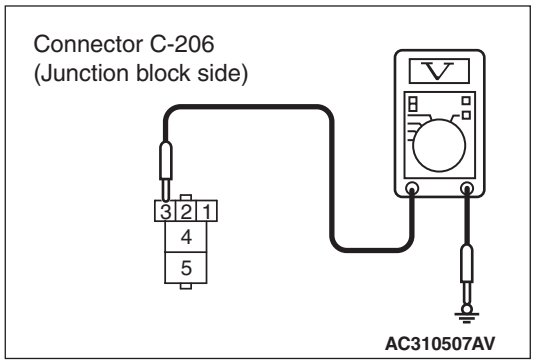

(3) Voltage between terminal 3 and body earth.

OK: System voltage

Q: Is the check result normal?
YES : Go to Step 15.
NO : Go to Step 14.

Main Index
Group TOC

STEP 14. Check the wiring harness between C-206 PTC heater relay 1 connector terminal No.3 and the ignition switch (IG2).

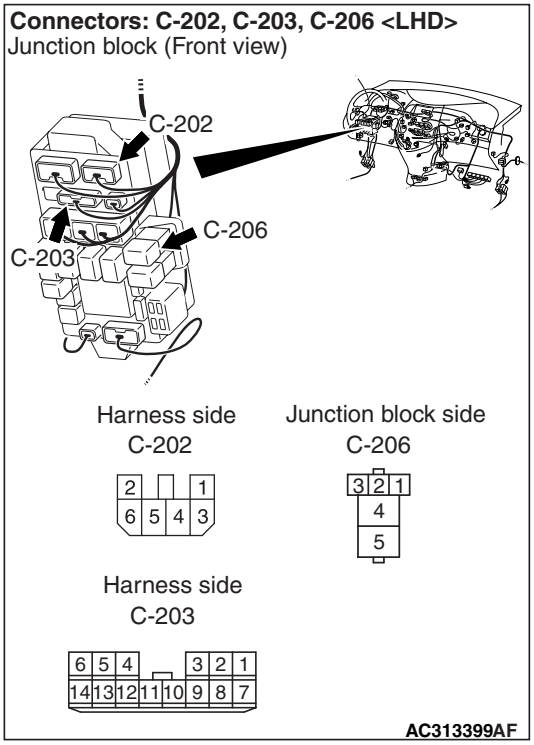

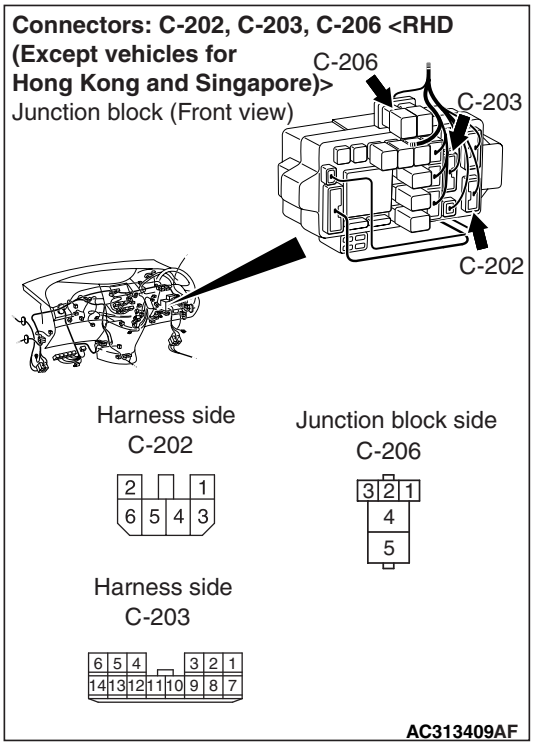

NOTE:

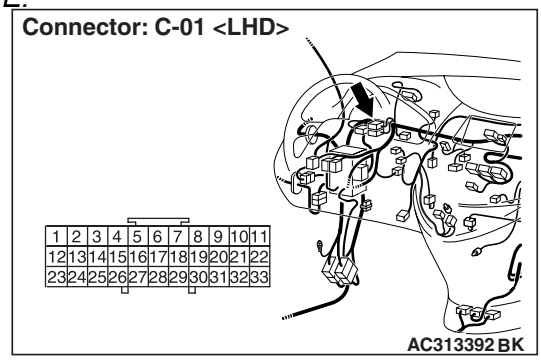

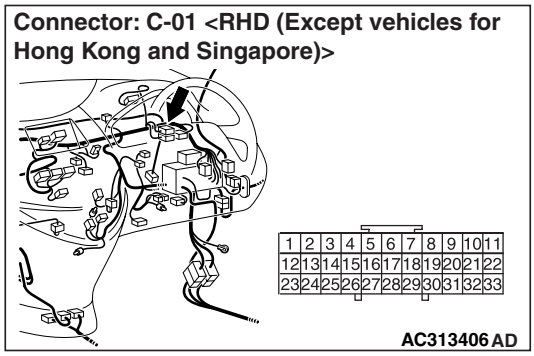

Prior to the wiring harness inspection, check junction block connectors C-202, C-203 and joint connector C-01, and repair if necessary.

- Check the PTC heater relay 1 earth supply line for open circuit.

Q: Is the check result normal?

YES : The trouble can be an intermittent malfunction (Refer to GROUP 00, How to Cope with Intermittent Malfunction P.00-5).

NO : Repair the wiring harness.

Main Index
Group TOC

STEP 15. Voltage measurement at C-206 PTC heater relay 1 connector.

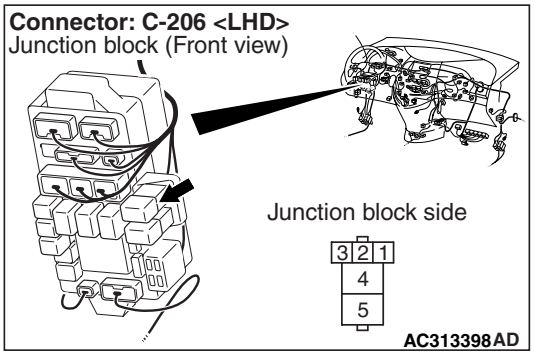

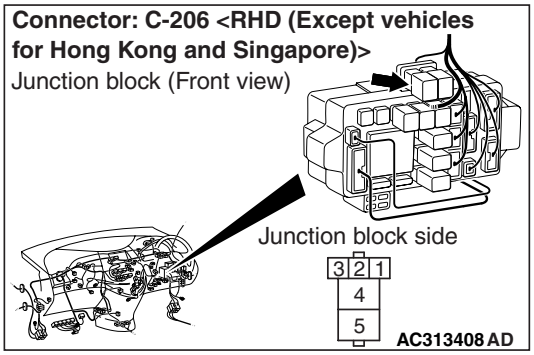

(1) Remove the relay, and measure at the relay block side.

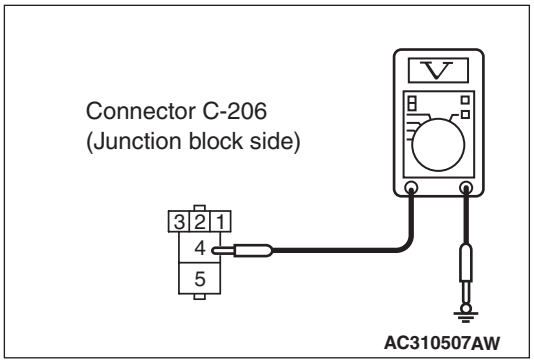

(2) Voltage between terminal 4 and body earth.

OK: System voltage

Q: Is the check result normal?

YES : Go to Step 17.

NO : Go to Step 16.

STEP 16. Check the wiring harness between C-206 PTC heater relay 1 connector terminal No.4 and the fusible link (28).

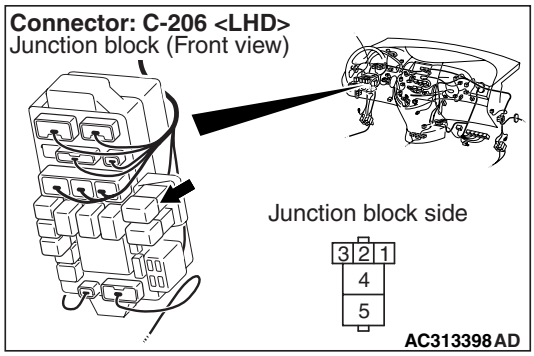

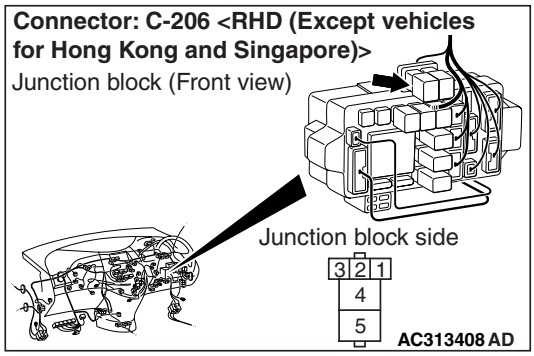

NOTE:

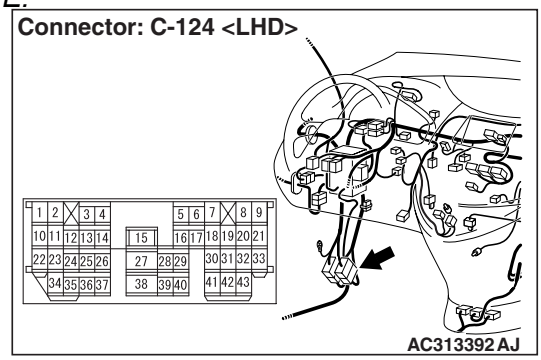

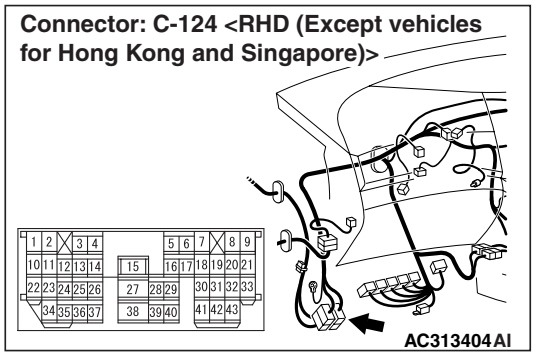

Prior to the wiring harness inspection, check intermediate connector C-124, and repair if necessary.

- Check the PTC heater relay 1 power supply line for open circuit.

Main Index
Group TOC

Q: Is the check result normal?

YES : The trouble can be an intermittent malfunction (Refer to GROUP 00, How to Cope with Intermittent Malfunction P.00-5).

NO : Repair the wiring harness.

STEP 17. Check the wiring harness between C-206 PTC heater relay 1 connector terminal No.1 and C-105 A/C-ECU connector terminal No.46.

Connectors: C-01, C-105 <LHD>

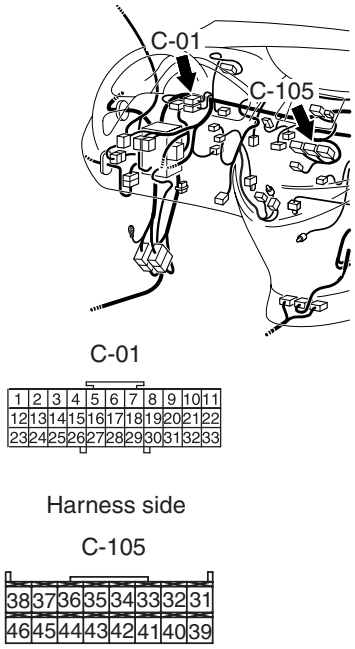

AC313393AK

Connectors: C-01, C-105 <RHD (Except vehicles for Hong Kong and Singapore)>

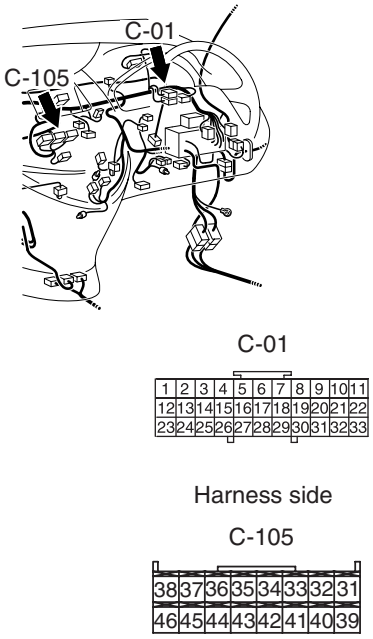

AC313407BG

Connector: C-206 <LHD>
Junction block (Front view)

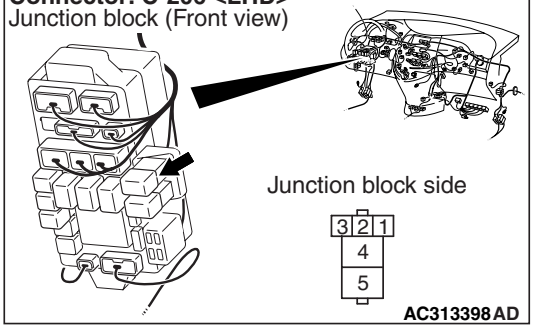

AC313398AD

Connector: C-206 <RHD (Except vehicles for Hong Kong and Singapore)>
Junction block (Front view)

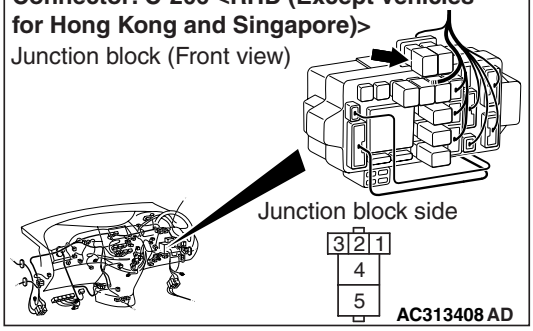

AC313408AD

NOTE: Prior to the wiring harness inspection, check joint connector C-01, and repair if necessary.

- Check the PTC heater relay 1 earth line for open or short circuit.

Q: Is the check result normal?

YES : Go to Step 18.

NO : Repair the wiring harness.

Main Index
Group TOC

STEP 18. Check the wiring harness between C-206 PTC heater relay 1 connector terminal No.5 and C-103 PTC heater connector terminal No.2.

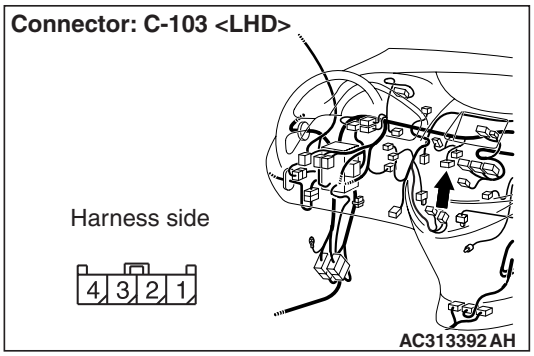

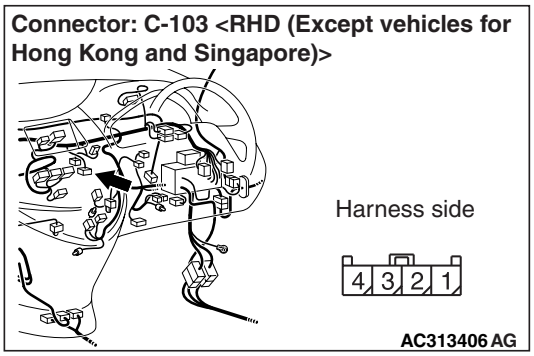

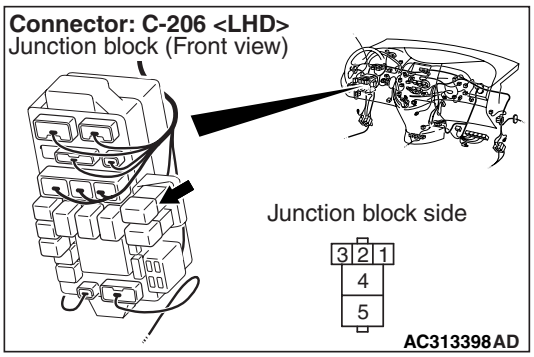

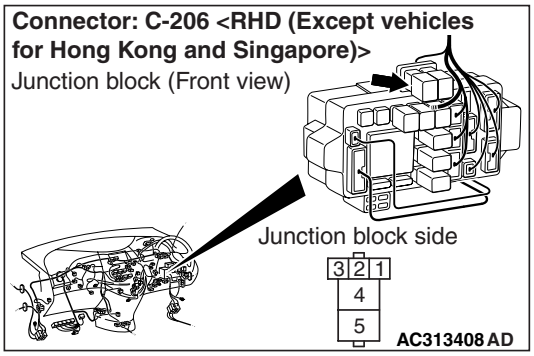

- Check the PTC heater relay 1 power supply line for open circuit.

Q: Is the check result normal?

YES : The trouble can be an intermittent malfunction (Refer to GROUP 00, How to Cope with Intermittent Malfunction P.00-5).

NO : Repair the wiring harness.

STEP 19. Voltage measurement at C-103 PTC heater connector.

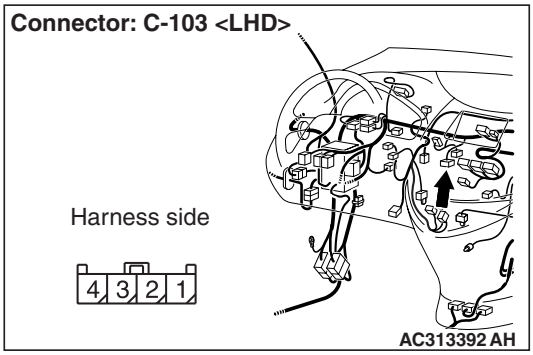

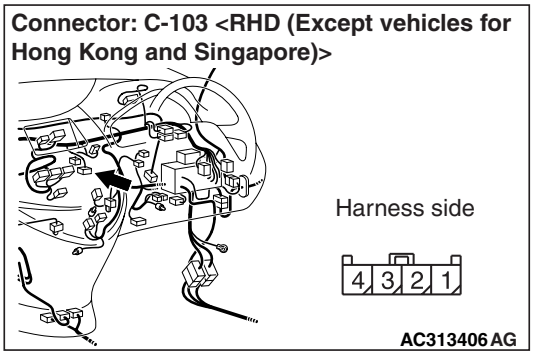

(1) Disconnect the connector, and measure at the wiring harness side.

Main Index
Group TOC

(2) Turn the ignition switch to the "ON" position.

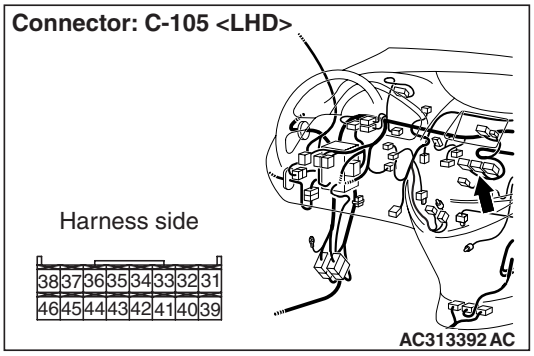

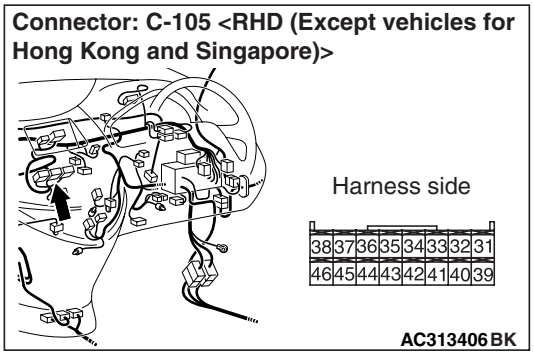

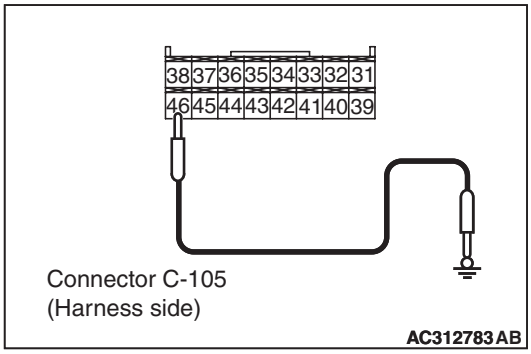

(3) Disconnect A/C-ECU connector C-105 and earth terminal 46.

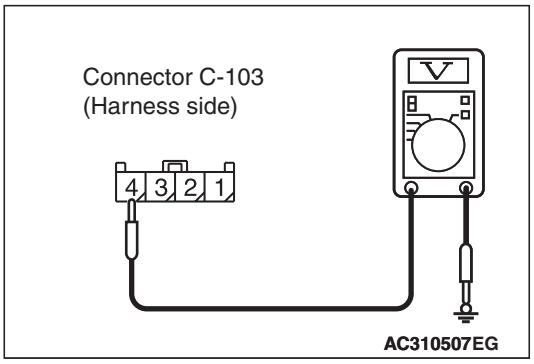

(4) Voltage between terminal 4 and body earth.

OK: System voltage

Q: Is the check result normal?
YES : Go to Step 28.
NO : Go to Step 20.

STEP 20. Connector check: C-207 PTC heater relay 2 controller connector

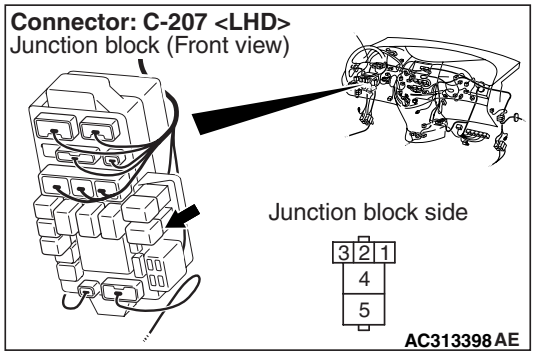

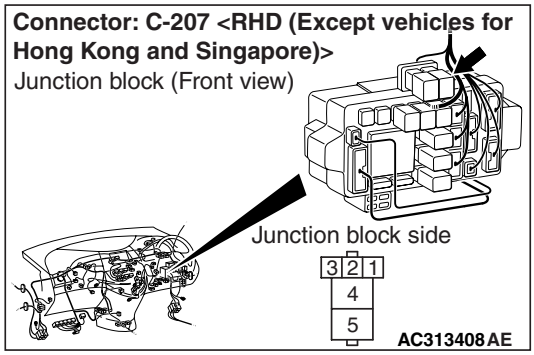

Q: Is the check result normal?
YES : Go to Step 21.
NO : Repair the connector.

STEP 21. Check the PTC heater relay 2 continuity.

Refer to P.55-208.

Q: Is the PTC heater relay 2 in good condition?
YES : Go to Step 22.
NO : Replace the PTC heater relay 2.

Main Index
Group TOC

STEP 22. Voltage measurement at C-207 PTC heater relay 2 connector.

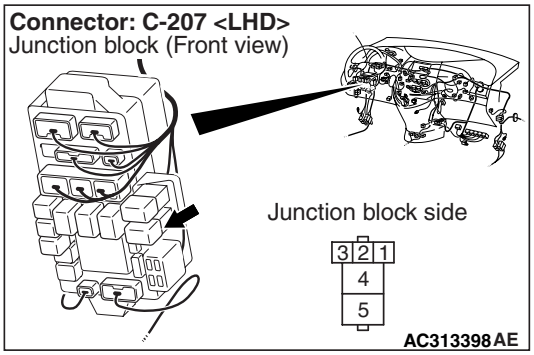

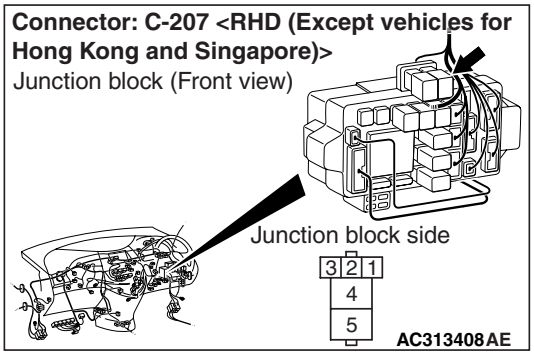

(1) Remove the relay, and measure at the relay block side.
(2) Turn the ignition switch to the "ON" position.

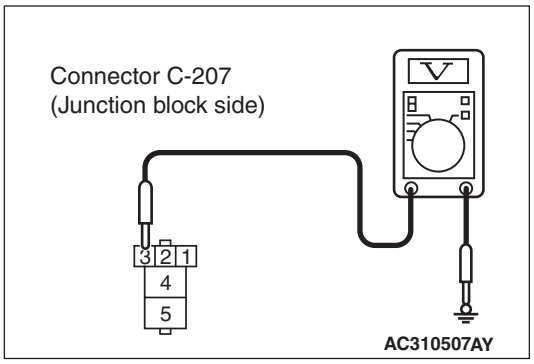

(3) Voltage between terminal 3 and body earth.

OK: System voltage

Q: Is the check result normal?
YES : Go to Step 24.
NO : Go to Step 23.

STEP 23. Check the wiring harness between C-207 PTC heater relay 2 connector terminal No.3 and the ignition switch (IG2).

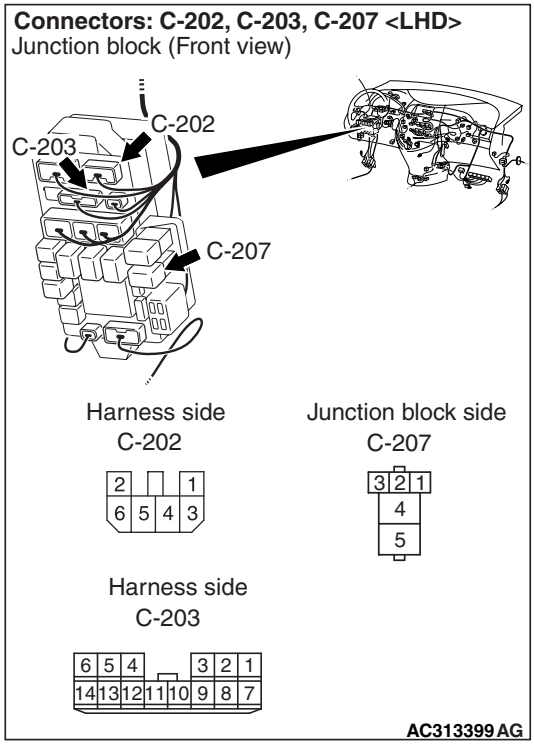

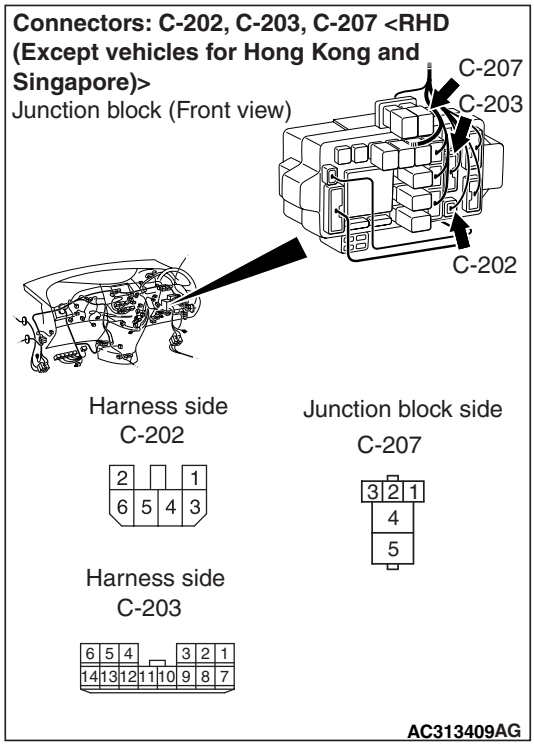

Main Index
Group TOC

NOTE:

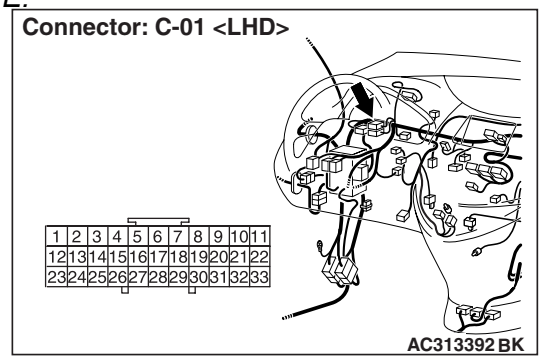

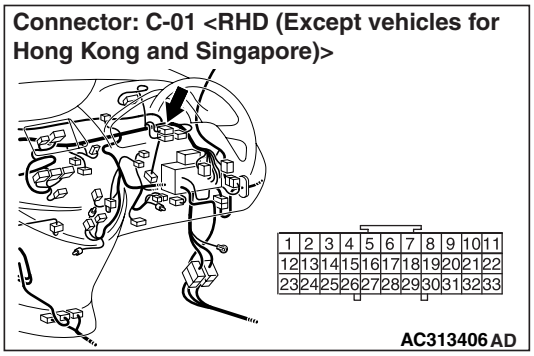

Prior to the wiring harness inspection, check junction block connectors C-202, C-203 and joint connector C-01, and repair if necessary.

- Check the PTC heater relay 2 power supply line for open circuit.

Q: Is the check result normal?

YES : The trouble can be an intermittent malfunction (Refer to GROUP 00, How to Cope with Intermittent Malfunction P.00-5).

NO : Repair the wiring harness.

STEP 24. Voltage measurement at C-207 PTC heater relay 2 connector.

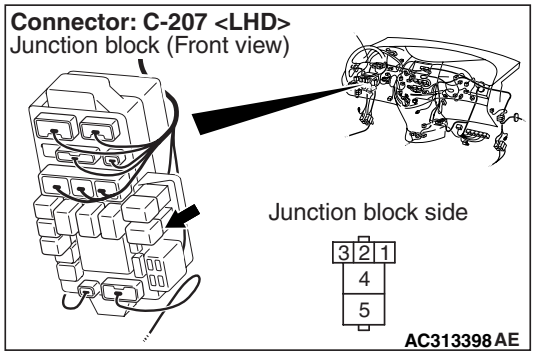

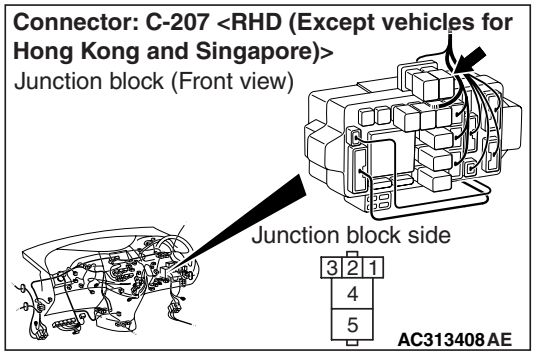

(1) Remove the relay, and measure at the relay block side.

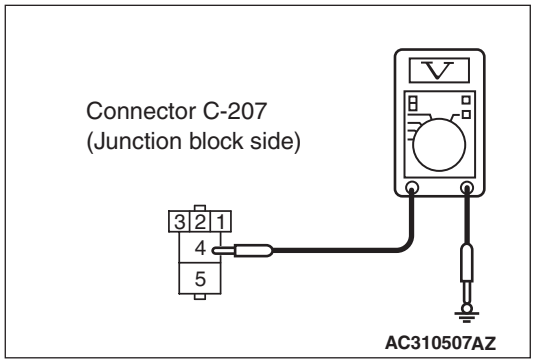

(2) Voltage between terminal 4 and body earth.

OK: System voltage

Q: Is the check result normal?

YES : Go to Step 26.

NO : Go to Step 25.

Main Index
Group TOC

STEP 25. Check the wiring harness between C-207 PTC heater relay 2 connector terminal No.4 and the fusible link (28).

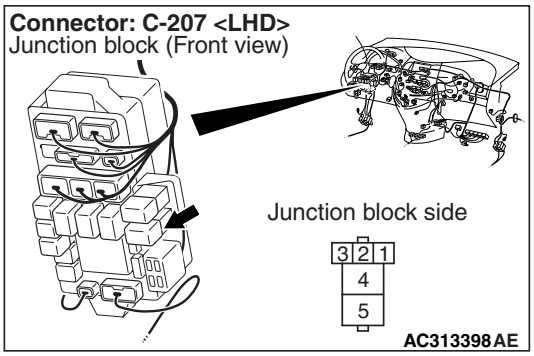

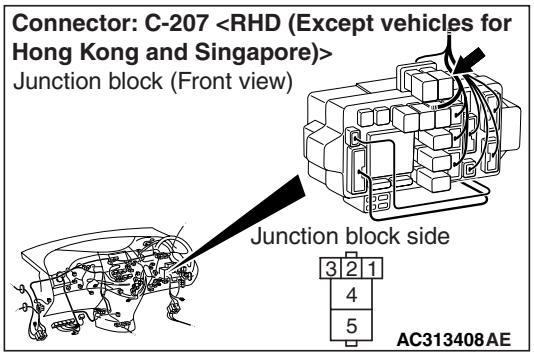

NOTE:

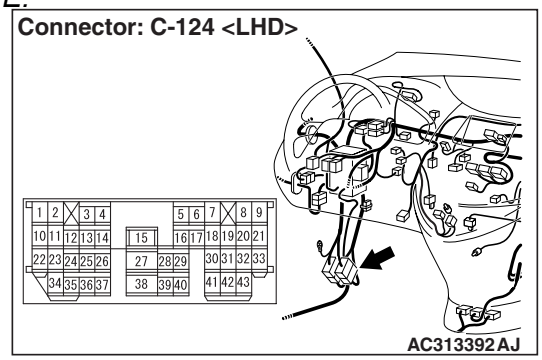

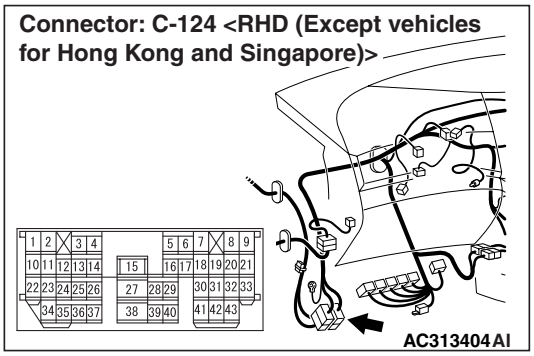

Prior to the wiring harness inspection, check intermediate connector C-124, and repair if necessary.

- Check the PTC heater relay 2 power supply line for open circuit.

Q: Is the check result normal?

YES : The trouble can be an intermittent malfunction (Refer to GROUP 00, How to Cope with Intermittent Malfunction P.00-5).

NO : Repair the wiring harness.

STEP 26. Check the wiring harness between C-207 PTC heater relay 2 connector terminal No.1 and C-105 A/C-ECU connector terminal No.46.

Connectors: C-01, C-105 <LHD>

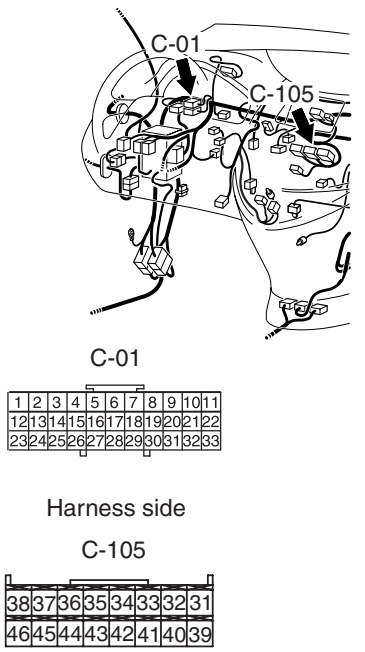

AC313393AK

Connectors: C-01, C-105 <RHD (Except vehicles for Hong Kong and Singapore)>

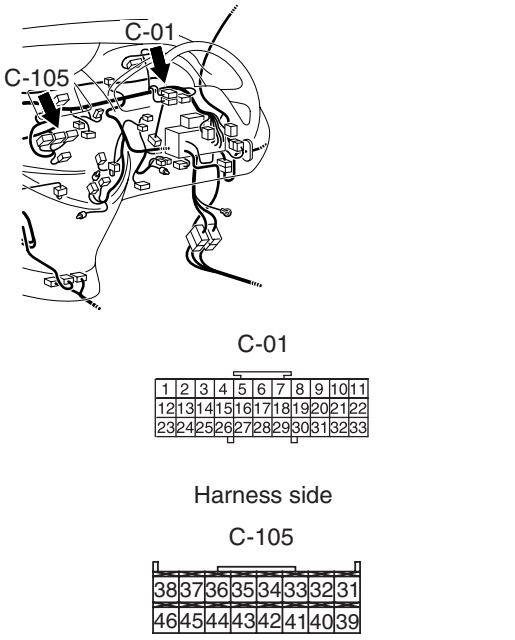

AC313407BG

Connector: C-207 <LHD>
Junction block (Front view)

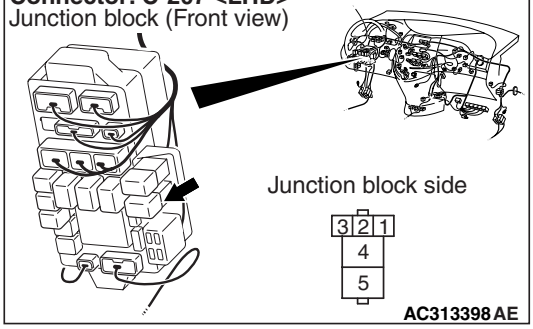

AC313398AE

Connector: C-207 <RHD (Except vehicles for Hong Kong and Singapore)>
Junction block (Front view)

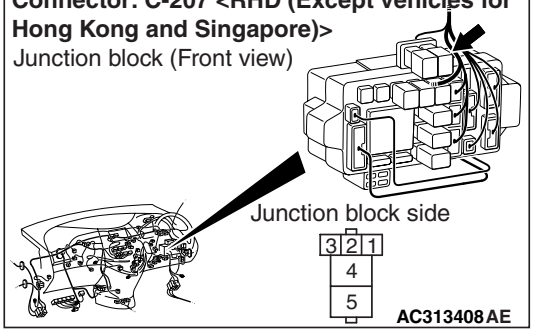

AC313408AE

NOTE: Prior to the wiring harness inspection, check joint connector C-01, and repair if necessary.

- Check the PTC heater relay 2 earth line for open or short circuit.

Q: Is the check result normal?
YES : Go to Step 27.
NO : Repair the wiring harness.

Main Index
Group TOC

STEP 27. Check the wiring harness between C-207 PTC heater relay 2 connector terminal No.5 and C-103 PTC heater connector terminal No.4.

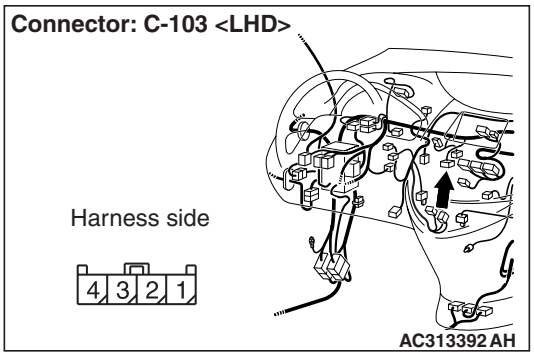

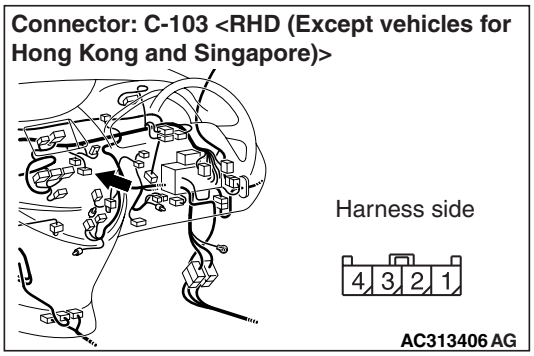

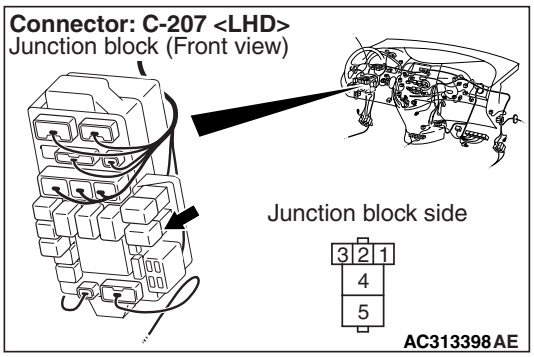

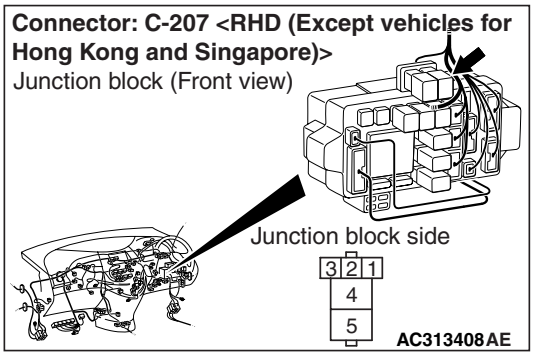

- Check the PTC heater power supply line for open circuit.

Q: Is the check result normal?

YES : The trouble can be an intermittent malfunction (Refer to GROUP 00, How to Cope with Intermittent Malfunction P.00-5).

NO : Repair the wiring harness.

STEP 28. Check the trouble symptom

Check that the PTC heater works normally.

Q: Is the check result normal?

YES : The trouble can be an intermittent malfunction (Refer to GROUP 00, How to Cope with Intermittent Malfunction P.00-5).

NO : Replace the A/C-ECU.

Main Index
Group TOC

Inspection Procedure 12: The PTC heater does not work <Vehicles for Hong Kong and Singapore>

PTC Heater Circuit

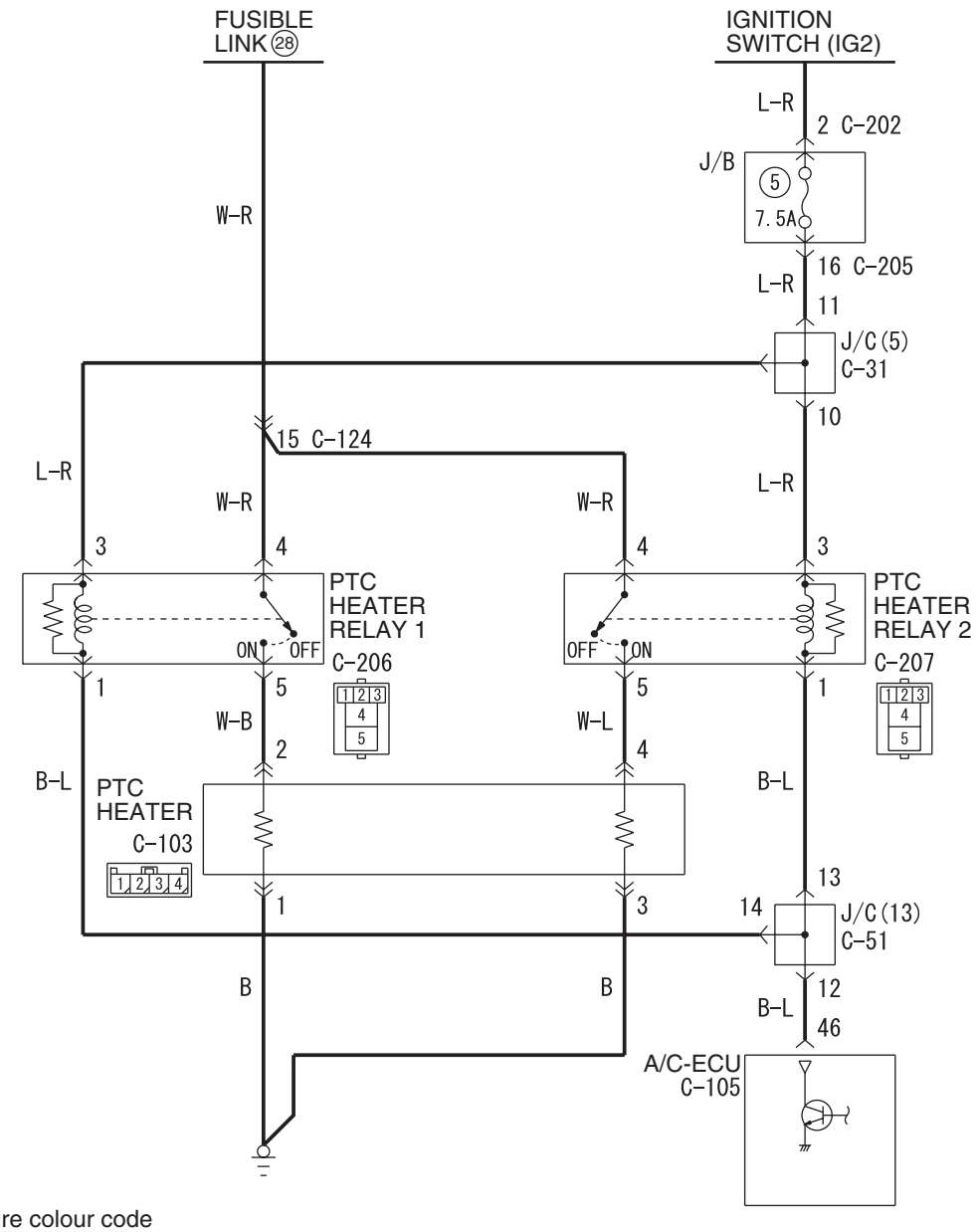

Wire colour code
B : Black LG : Light green G : Green L : Blue W : White Y : Yellow SB : Sky blue
BR : Brown O : Orange GR : Grey R : Red P : Pink V : Violet PU : Purple

W6X55X008A

COMMENTS ON TROUBLE SYMPTOM

When the PTC heater does not work under the following conditions, the PTC heater switch system or the PTC heater circuit system may be defective.

PTC heater operating conditions

- PTC heater switch: ON
- Air outlet: FOOT/DEF, FOOT, FACE/FOOT
- Temperature control dial: MAX HOT
- Coolant temperature: 82 degrees Celsius or less

NOTE: When the coolant temperature becomes above 82 degrees Celsius and PTC heater stops the operation, the PTC heater does not operate until coolant temperature becomes below 72 degrees Celsius.

Main Index
Group TOC

PROBABLE CAUSES

- Malfunction of the PTC heater switch system
- Damaged the wiring harness or connectors
- Malfunction of the PTC heater relay 1
- Malfunction of the PTC heater relay 2
- Malfunction of the PTC heater
- Malfunction of the automatic air conditioner control panel (A/C-ECU)

DIAGNOSIS PROCEDURE

STEP 1. M.U.T.-III data list

Check that the following service data display contents are normal. (Refer to P.55-198.)

- Item 35: PTC heater switch

Q: Does the blower motor work normally?
YES : Go to Step 4.
NO : Go to Step 2.

STEP 2. Connector check: C-106 A/C-ECU connector

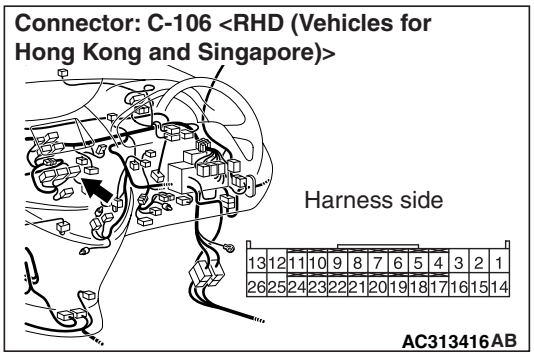

Q: Is the check result normal?
YES : Go to Step 3.
NO : Repair the connector.

STEP 3. Voltage measurement at C-106 A/C-ECU connector.

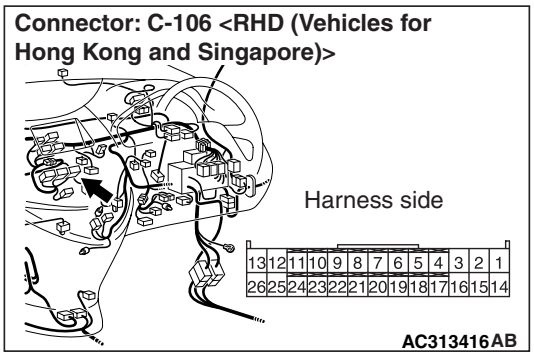

(1) Disconnect the connector, and measure at the wiring harness side.
(2) Turn the ignition switch to the "ON" position.
(3) Turn the PTC heater switch to the "ON" position.

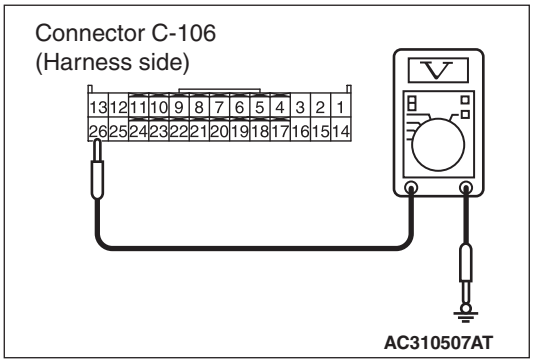

(4) Voltage between terminal 26 and body earth.

OK: System voltage

Q: Is the check result normal?
YES : Go to Step 28.
NO : Inspection Procedure 27: Refer to PTC heater switch system <Vehicles for Hong Kong and Singapore>P.55-183 .

STEP 4. Connector check: C-103 PTC heater connector

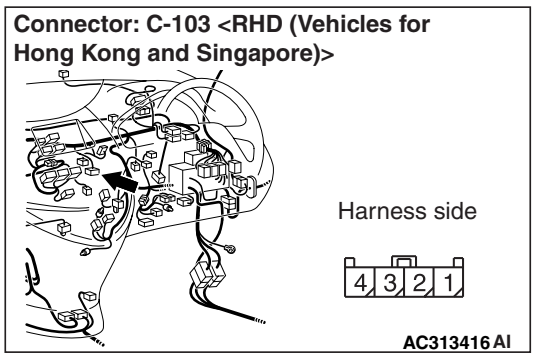

Q: Is the check result normal?
YES : Go to Step 5.
NO : Repair the connector.

STEP 5. Resistance measurement at the C-103 PTC heater connector.

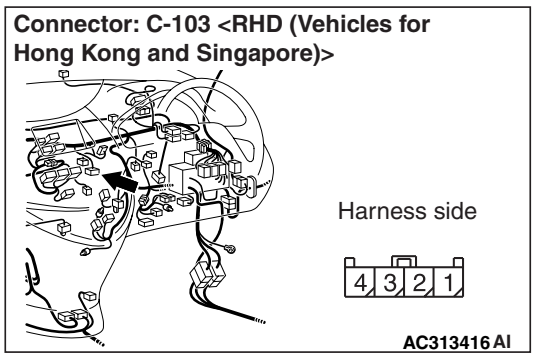

(1) Disconnect the connector, and measure at the wiring harness side.

Main Index
Group TOC

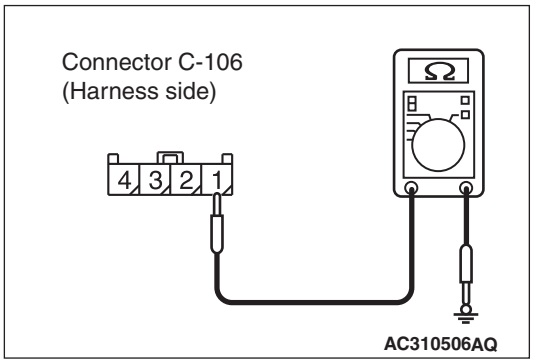

(2) Continuity between terminal 1 and body earth

OK: 2Ω or less

Q: Is the check result normal?
YES : Go to Step 7.
NO : Go to Step 6.

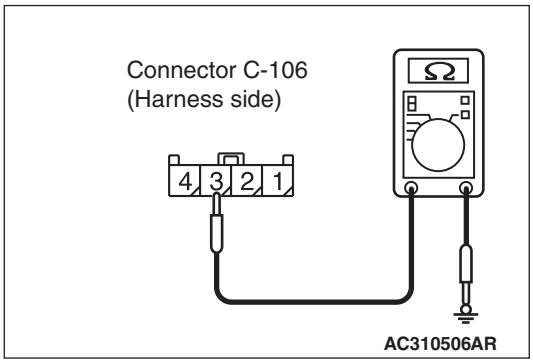

(2) Continuity between terminal 3 and body earth

OK: 2Ω or less

Q: Is the check result normal?
YES : Go to Step 9.
NO : Go to Step 8.

STEP 6. Check the wiring harness between C-103 PTC heater connector terminal No.1 and body earth.

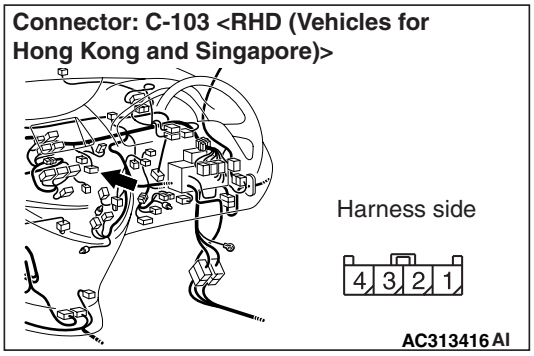

- Check the PTC heater earth line for open circuit.

Q: Is the check result normal?
YES : The trouble can be an intermittent malfunction (Refer to GROUP 00, How to Cope with Intermittent Malfunction P.00-5).
NO : Repair the wiring harness.

STEP 7. Resistance measurement at the C-103 PTC heater connector.

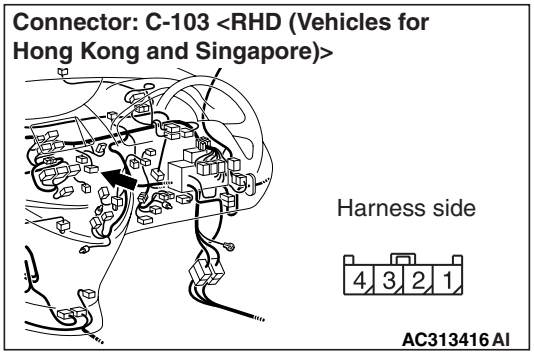

(1) Disconnect the connector, and measure at the wiring harness side.

STEP 8. Check the wiring harness between C-103 PTC heater connector terminal No.3 and body earth.

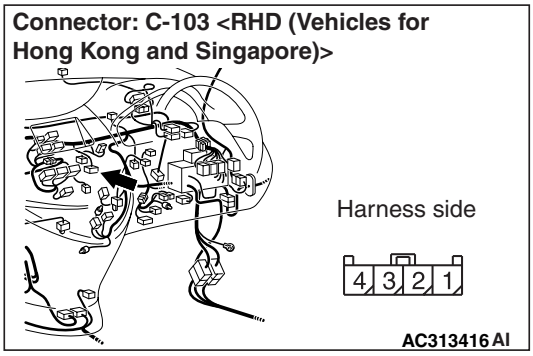

- Check the PTC heater earth line for open circuit.

Q: Is the check result normal?
YES : The trouble can be an intermittent malfunction (Refer to GROUP 00, How to Cope with Intermittent Malfunction P.00-5).
NO : Repair the wiring harness.

STEP 9. Connector check: C-105 A/C-ECU connector

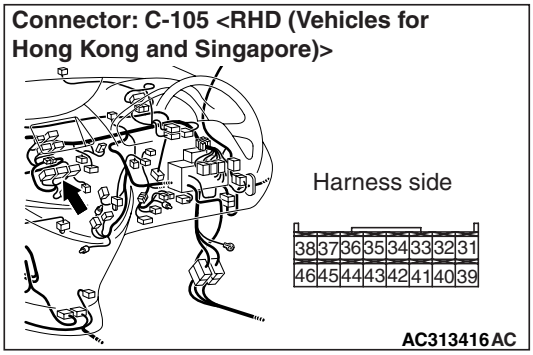

Q: Is the check result normal?
YES : Go to Step 10.
NO : Repair the connector.

Main Index
Group TOC

STEP 10. Voltage measurement at C-103 PTC heater connector.

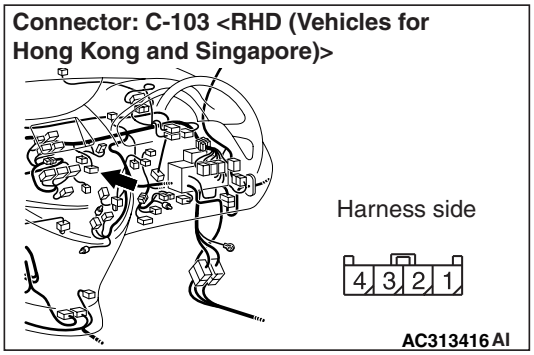

(1) Disconnect the connector, and measure at the wiring harness side.
(2) Turn the ignition switch to the "ON" position.

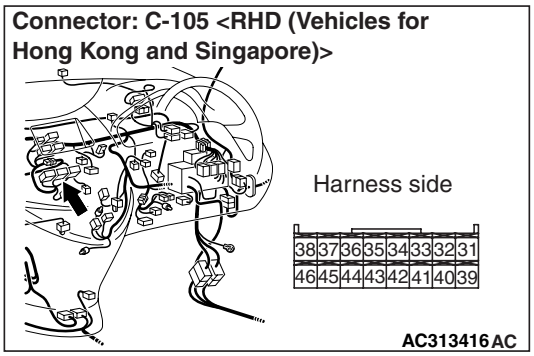

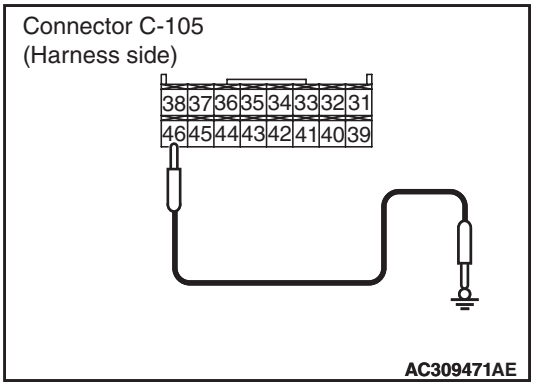

(3) Disconnect A/C-ECU connector C-105 and earth terminal 46.

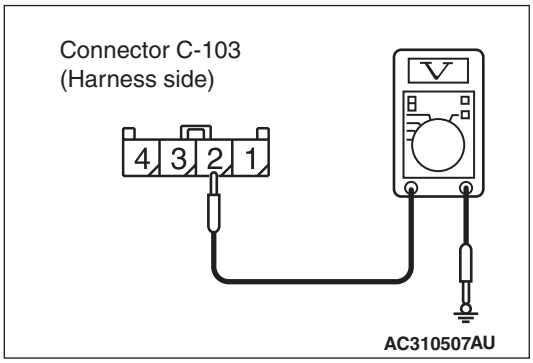

(4) Voltage between terminal 2 and body earth.

OK: System voltage

Q: Is the check result normal?
YES : Go to Step 19.
NO : Go to Step 11.

STEP 11. Connector check: C-206 PTC heater relay 1 controller connector

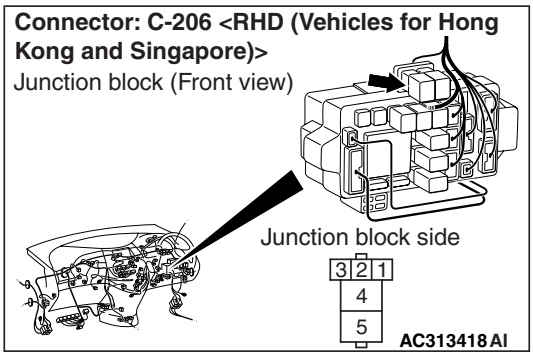

Q: Is the check result normal?
YES : Go to Step 12.
NO : Repair the connector.

STEP 12. Check the PTC heater switch relay 1 continuity.

Refer to P.55-208.

Q: Is the PTC heater switch relay 1 in good condition?
YES : Go to Step 13.
NO : Replace the PTC heater switch relay 1.

Main Index
Group TOC

STEP 13. Voltage measurement at C-206 PTC heater relay 1 connector.

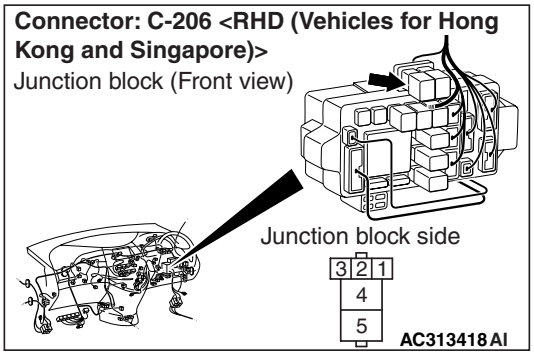

(1) Remove the relay, and measure at the relay block side.
(2) Turn the ignition switch to the "ON" position.

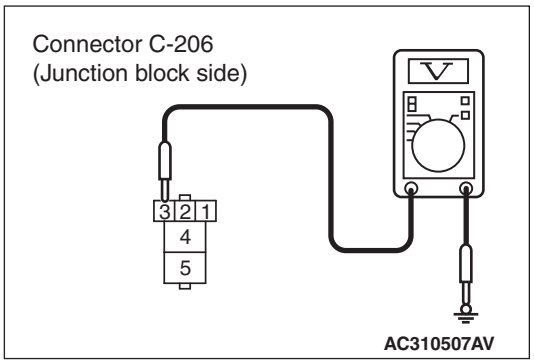

(3) Voltage between terminal 3 and body earth.

OK: System voltage

Q: Is the check result normal?
YES : Go to Step 15.
NO : Go to Step 14.

STEP 14. Check the wiring harness between C-206 PTC heater relay 1 connector terminal No.3 and the ignition switch (IG2).

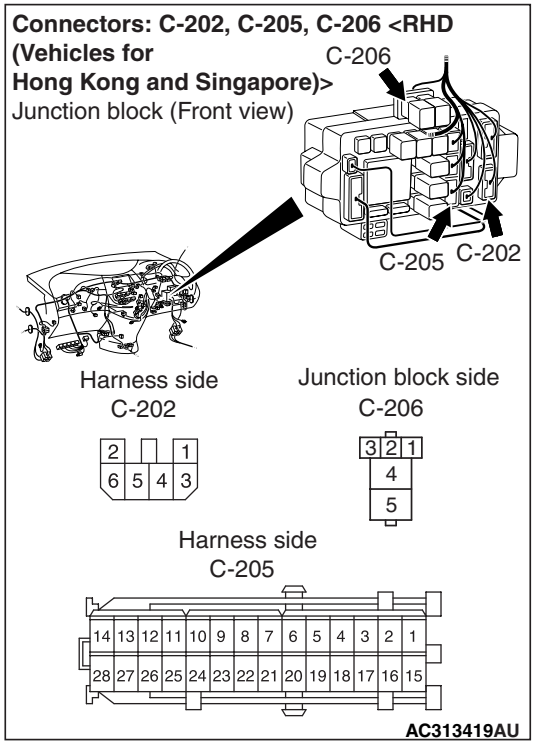

NOTE:

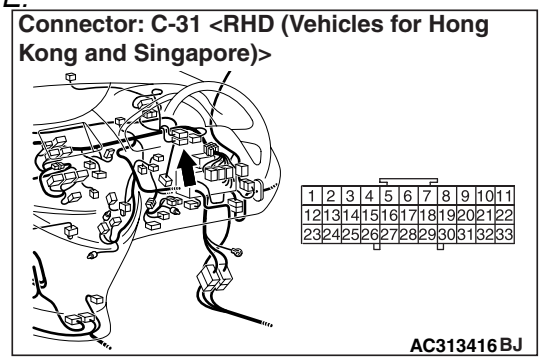

Prior to the wiring harness inspection, check junction block connectors C-202, C-205 and joint connector C-31, and repair if necessary.

- Check the PTC heater relay 1 earth line for open circuit.

Q: Is the check result normal?
YES : The trouble can be an intermittent malfunction (Refer to GROUP 00, How to Cope with Intermittent Malfunction P.00-5).
NO : Repair the wiring harness.

Main Index
Group TOC

STEP 15. Voltage measurement at C-206 PTC heater relay 1 connector.

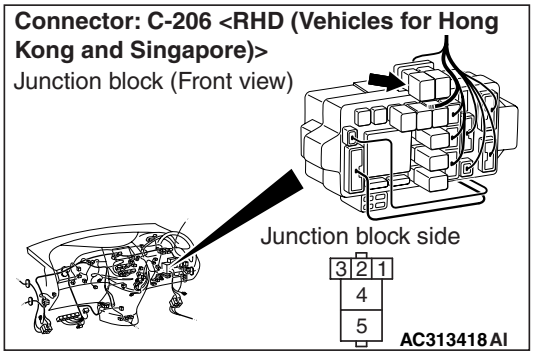

(1) Remove the relay, and measure at the relay block side.

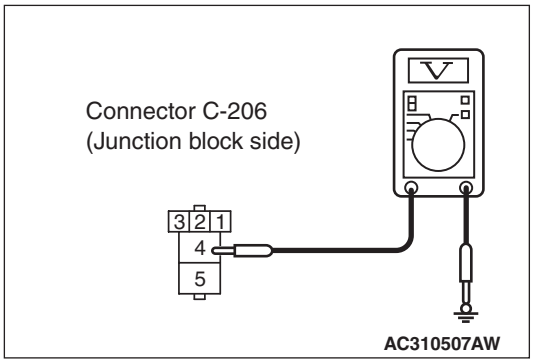

(2) Voltage between terminal 4 and body earth.

OK: System voltage

Q: Is the check result normal?

YES : Go to Step 17.

NO : Go to Step 16.

STEP 16. Check the wiring harness between C-206 PTC heater relay 1 connector terminal No.4 and the fusible link (28).

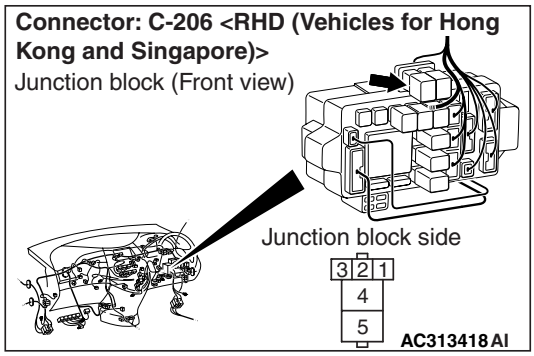

NOTE:

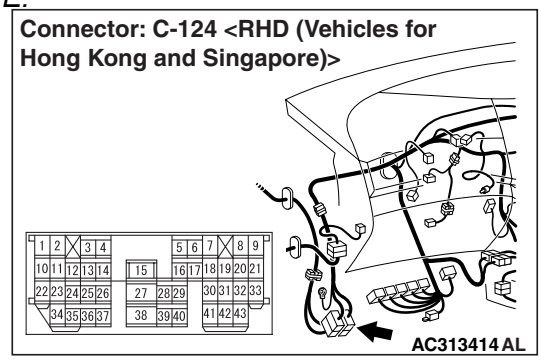

Prior to the wiring harness inspection, check intermediate connector C-124, and repair if necessary.

- Check the PTC heater relay 1 power supply line for open circuit.

Q: Is the check result normal?

YES : The trouble can be an intermittent malfunction (Refer to GROUP 00, How to Cope with Intermittent Malfunction P.00-5).

NO : Repair the wiring harness.

STEP 17. Check the wiring harness between C-206 PTC heater relay 1 connector terminal No.1 and C-105 A/C-ECU connector terminal No.46.

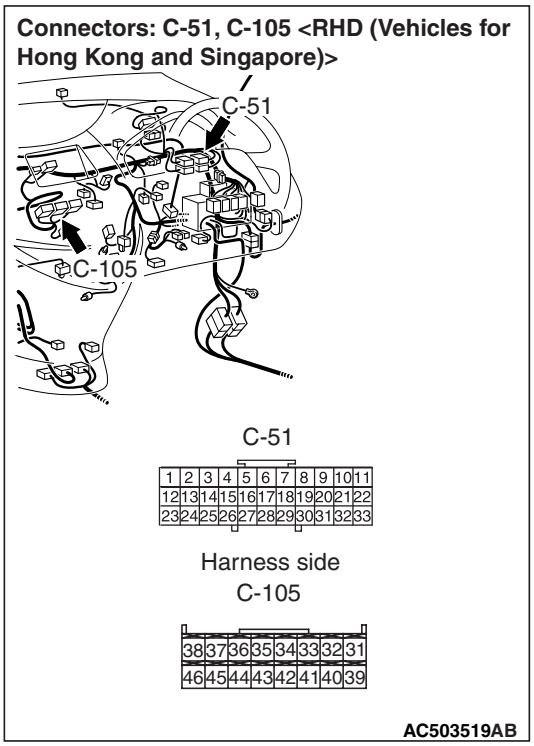

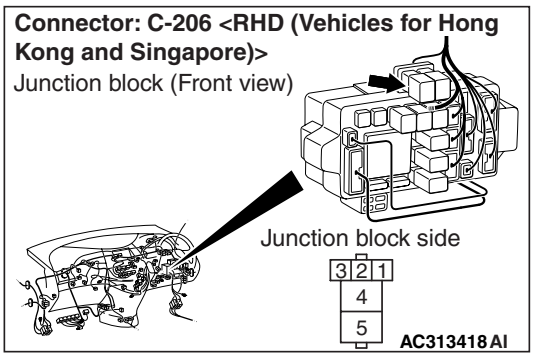

NOTE: Prior to the wiring harness inspection, check joint connector C-51, and repair if necessary.

- Check the PTC heater relay 1 earth line for open or short circuit.

Q: Is the check result normal?

YES : Go to Step 18.

NO : Repair the wiring harness.

STEP 18. Check the wiring harness between C-206 PTC heater relay 1 connector terminal No.5 and C-103 PTC heater connector terminal No.2.

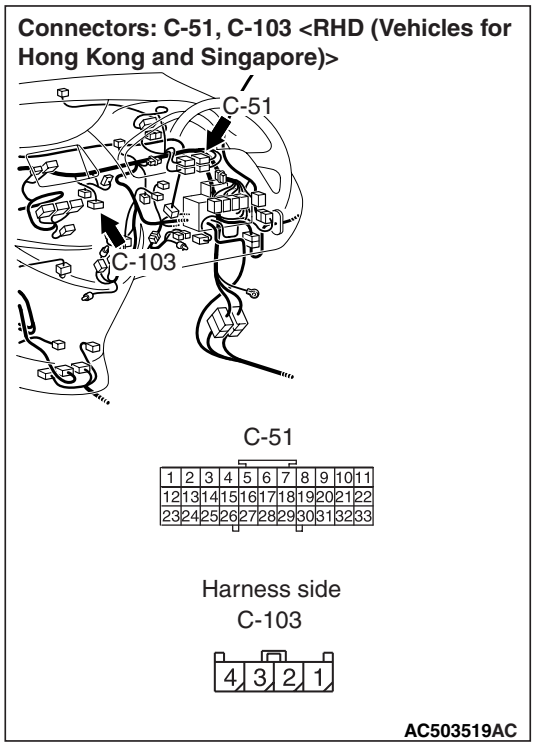

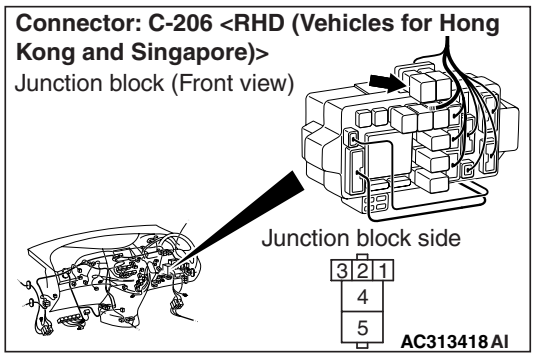

NOTE: Prior to the wiring harness inspection, check joint connector C-51, and repair if necessary.

- Check the PTC heater relay 1 power supply line for open circuit.

Q: Is the check result normal?

YES : The trouble can be an intermittent malfunction (Refer to GROUP 00, How to Cope with Intermittent Malfunction P.00-5).

NO : Repair the wiring harness.

Main Index
Group TOC

STEP 19. Voltage measurement at C-103 PTC heater connector.

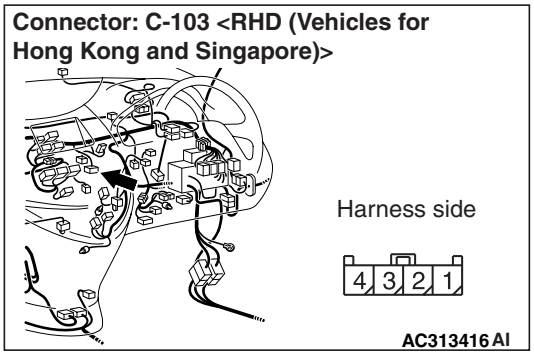

(1) Disconnect the connector, and measure at the wiring harness side.
(2) Turn the ignition switch to the "ON" position.

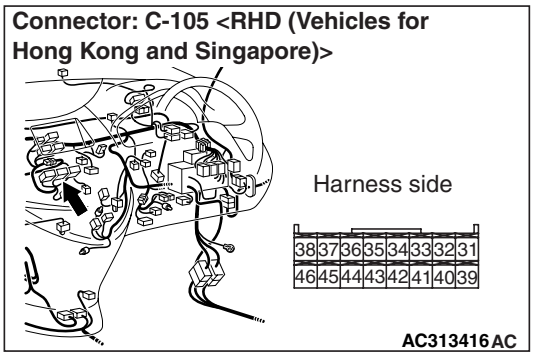

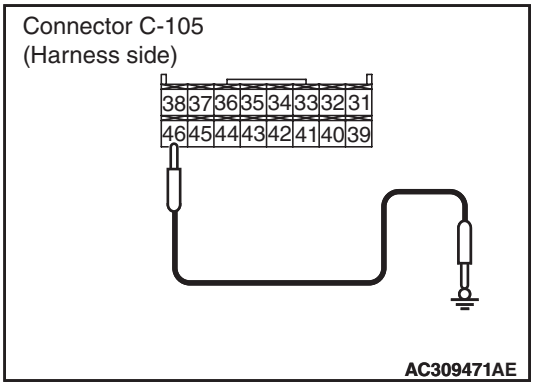

(3) Disconnect A/C-ECU connector C-105 and earth terminal 46.

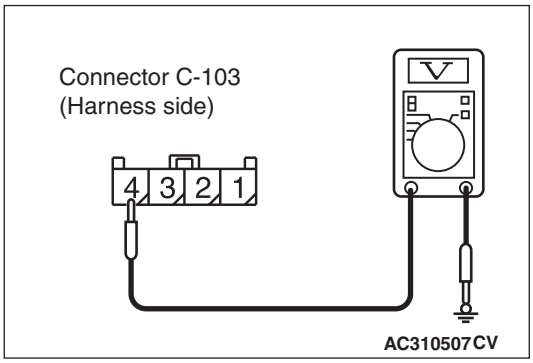

(4) Voltage between terminal 4 and body earth.

OK: System voltage

Q: Is the check result normal?
YES : Go to Step 28.
NO : Go to Step 20.

STEP 20. Connector check: C-207 PTC heater relay 2 controller connector

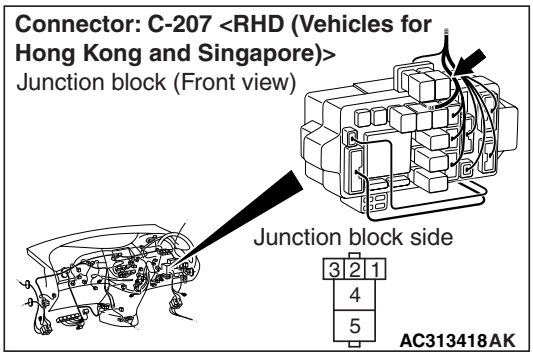

Q: Is the check result normal?
YES : Go to Step 21.
NO : Repair the connector.

STEP 21. Check the PTC heater relay 2 continuity.

Refer to P.55-208.

Q: Is the PTC heater relay 2 in good condition?
YES : Go to Step 22.
NO : Replace the PTC heater relay 2.

Main Index
Group TOC

STEP 22. Voltage measurement at C-207 PTC heater relay 2 connector.

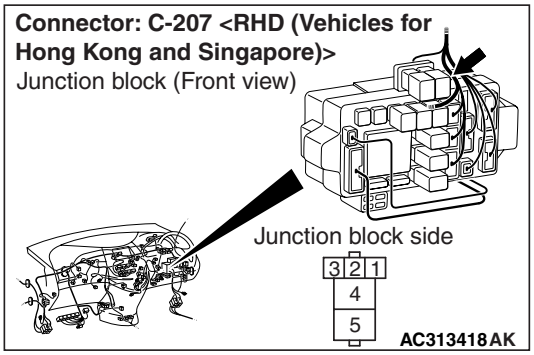

(1) Remove the relay, and measure at the relay block side.
(2) Turn the ignition switch to the "ON" position.

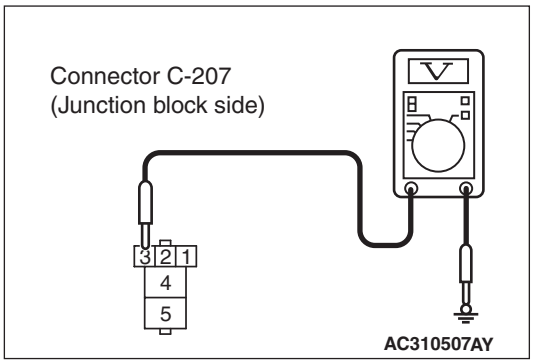

(3) Voltage between terminal 3 and body earth.

OK: System voltage

Q: Is the check result normal?
YES : Go to Step 24.
NO : Go to Step 23.

STEP 23. Check the wiring harness between C-207 PTC heater relay 2 connector terminal No.3 and the ignition switch (IG2).

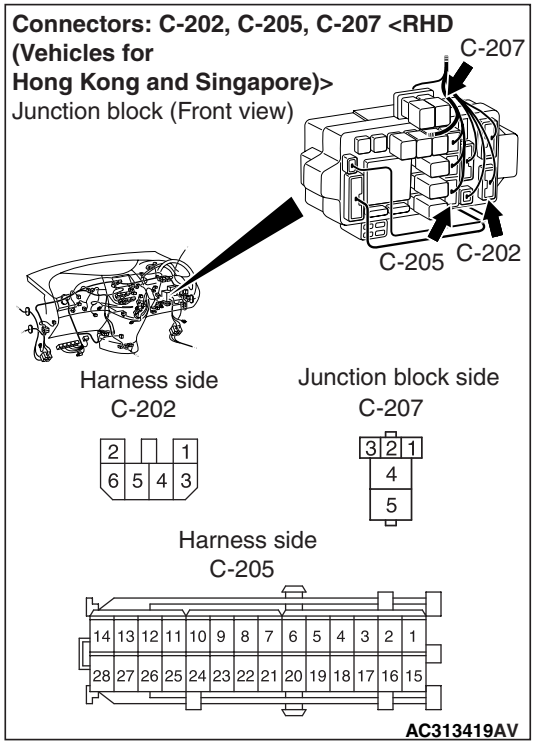

NOTE:

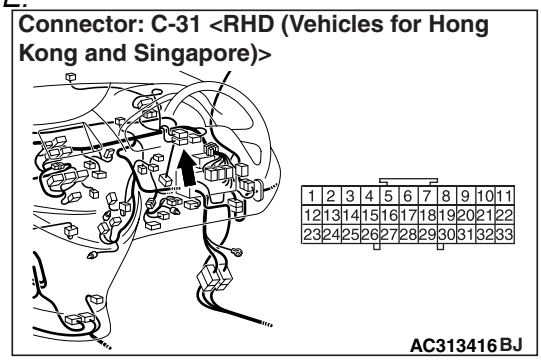

Prior to the wiring harness inspection, check junction block connectors C-202, C-205 and joint connector C-31, and repair if necessary.

- Check the PTC heater relay 2 power supply line for open circuit.

Q: Is the check result normal?
YES : The trouble can be an intermittent malfunction (Refer to GROUP 00, How to Cope with Intermittent Malfunction P.00-5).
NO : Repair the wiring harness.

Main Index
Group TOC

STEP 24. Voltage measurement at C-207 PTC heater relay 2 connector.

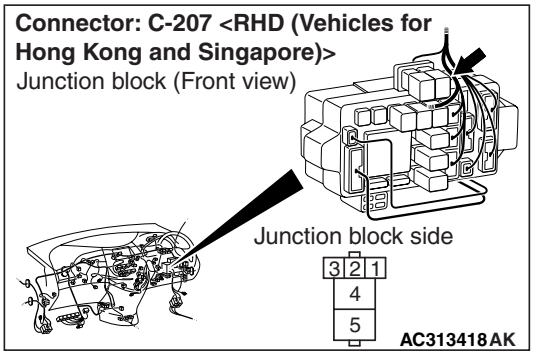

(1) Remove the relay, and measure at the relay block side.

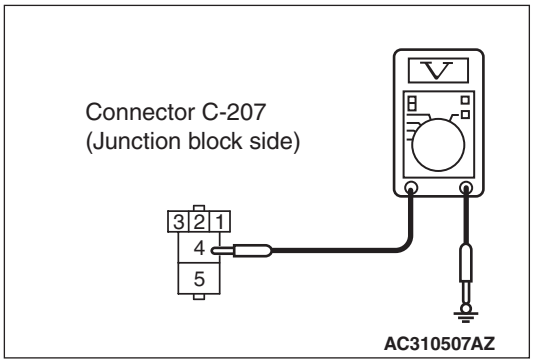

(2) Voltage between terminal 4 and body earth.

OK: System voltage

Q: Is the check result normal?

YES : Go to Step 26.

NO : Go to Step 25.

STEP 25. Check the wiring harness between C-207 PTC heater relay 2 connector terminal No.4 and the fusible link (28).

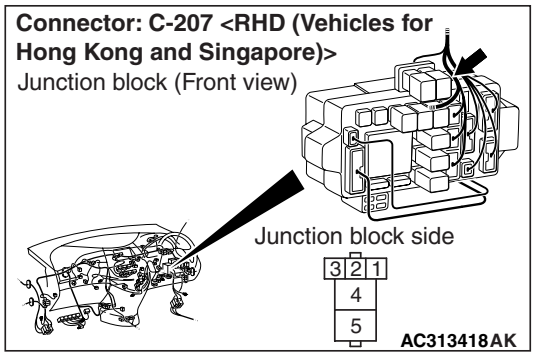

NOTE:

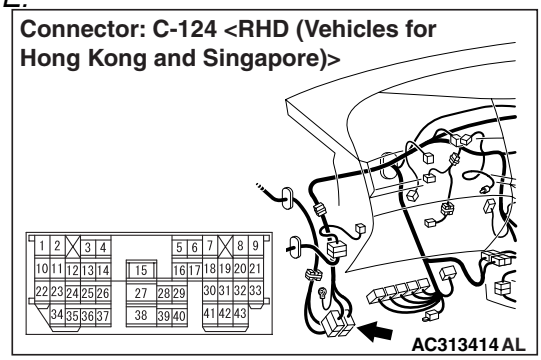

Prior to the wiring harness inspection, check intermediate connector C-124, and repair if necessary.

- Check the PTC heater relay 2 power supply line for open circuit.

Q: Is the check result normal?

YES : The trouble can be an intermittent malfunction (Refer to GROUP 00, How to Cope with Intermittent Malfunction P.00-5).

NO : Repair the wiring harness.

STEP 26. Check the wiring harness between C-207 PTC heater relay 2 connector terminal No.1 and C-105 A/C-ECU connector terminal No.46.

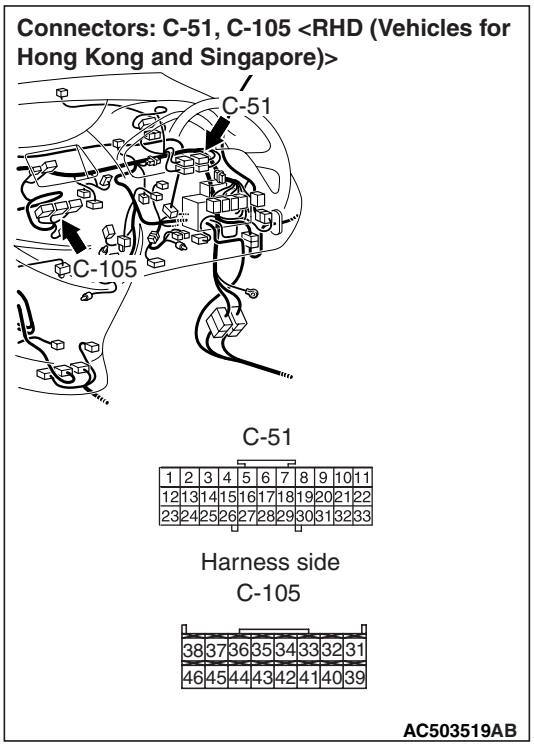

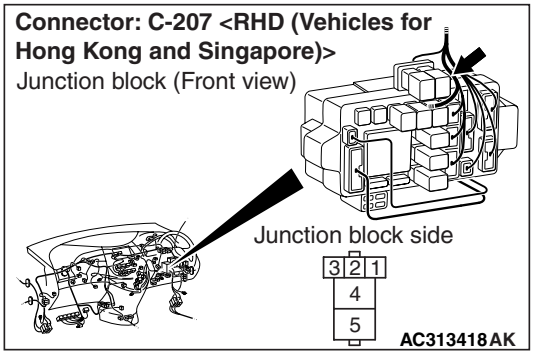

NOTE: Prior to the wiring harness inspection, check joint connector C-51, and repair if necessary.

- Check the PTC heater relay 2 earth line for open or short circuit.

Q: Is the check result normal?

YES : Go to Step 27.

NO : Repair the wiring harness.

STEP 27. Check the wiring harness between C-207 PTC heater relay 2 connector terminal No.5 and C-103 PTC heater connector terminal No.4.

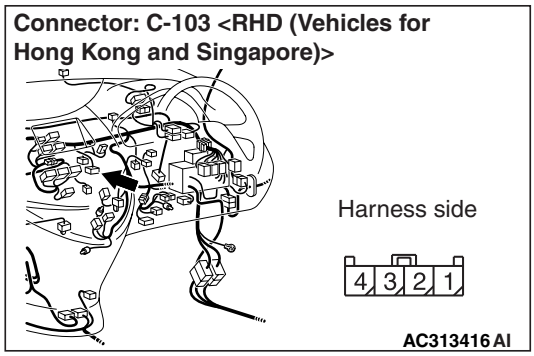

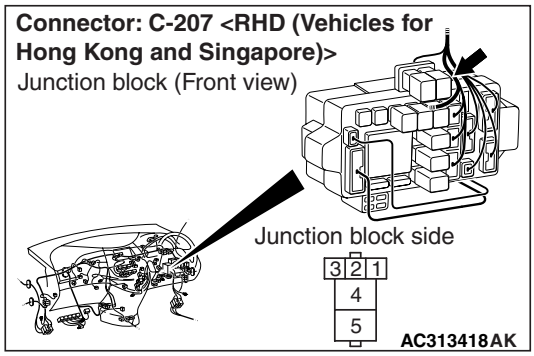

- Check the PTC heater power supply line for open circuit.

Q: Is the check result normal?

YES : The trouble can be an intermittent malfunction (Refer to GROUP 00, How to Cope with Intermittent Malfunction P.00-5).

NO : Repair the wiring harness.

STEP 28. Check the trouble symptom

Check that the PTC heater works normally.

Q: Is the check result normal?

YES : The trouble can be an intermittent malfunction (Refer to GROUP 00, How to Cope with Intermittent Malfunction P.00-5).

NO : Replace the A/C-ECU.

Main Index
Group TOC

Inspection Procedure 13: The rear window defogger does not work.

Rear Window Defogger Circuit

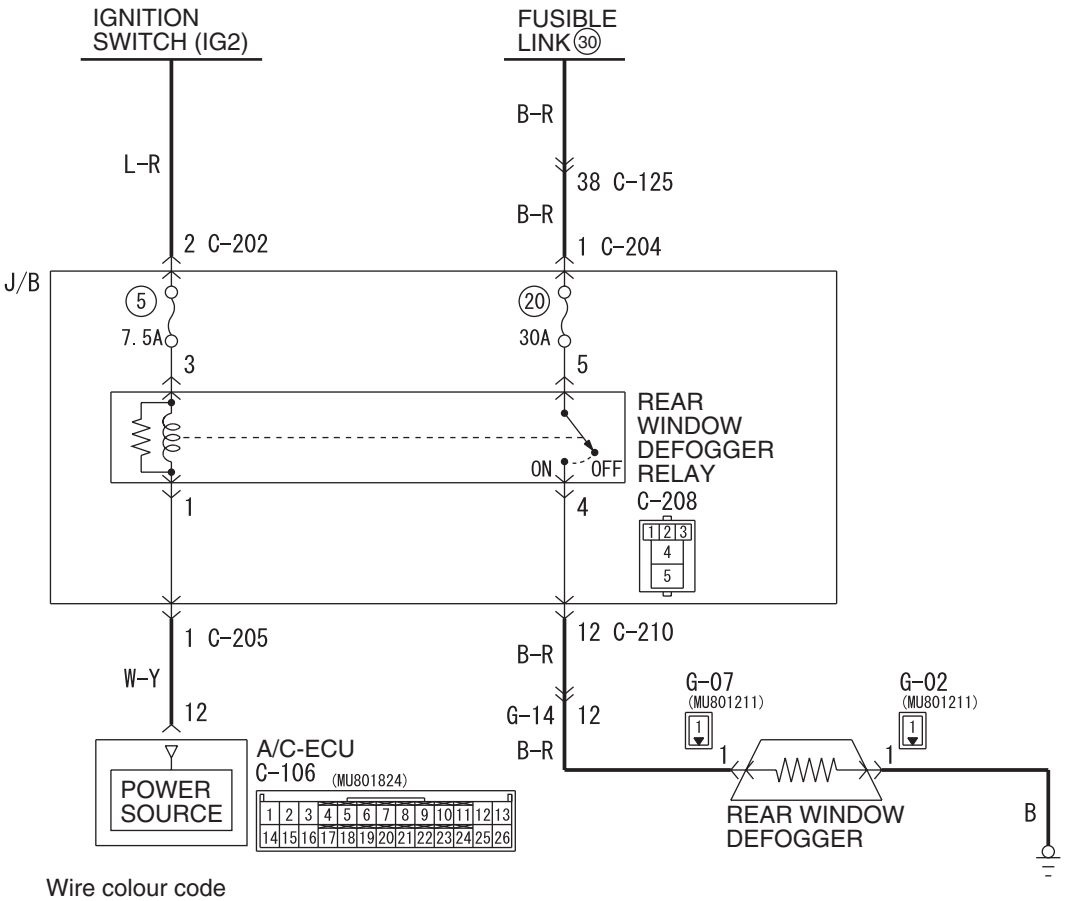

Wire colour code
B : Black LG : Light green G : Green L : Blue W : White Y : Yellow SB : Sky blue
BR : Brown O : Orange GR : Gray R : Red P : Pink V : Violet

W4X55E039A

CIRCUIT OPERATION

If the rear window defogger does not operate when the rear window defogger switch is turned on, the rear window defogger relay system may be defective.

PROBABLE CAUSES

- Malfunction of the A/C-ECU
- Malfunction of the rear window defogger relay
- Damaged the wiring harness or connectors
- Malfunction of the rear window defogger

DIAGNOSIS PROCEDURE

STEP 1. Check the A/C and outside/inside air selection damper control motor operation.

Q: Do the A/C and outside/inside air selection damper control motor work normally?

YES : Go to Step 2.

NO <Except vehicles for Hong Kong and Singapore> : Refer to Inspection procedure 28 "Malfunction of the A/C-ECU power supply system <Except vehicles for Hong Kong and Singapore>P.55-186 ."

NO <Vehicles for Hong Kong and Singapore> : Refer to Inspection procedure 29 "Malfunction of the A/C-ECU power supply system <Vehicles for Hong Kong and Singapore>P.55-193 ."

Main Index
Group TOC

STEP 2. Connector check: C-106 A/C-ECU connector and G-07 rear window defogger

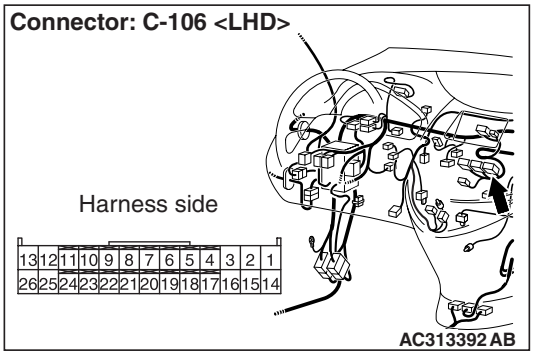

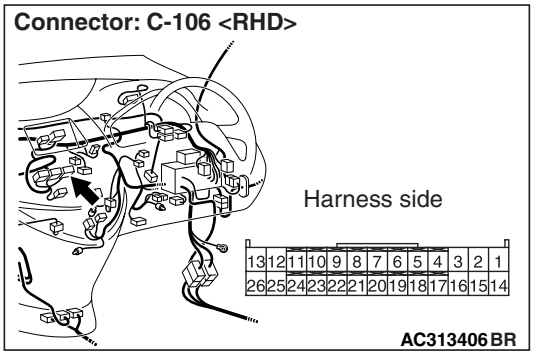

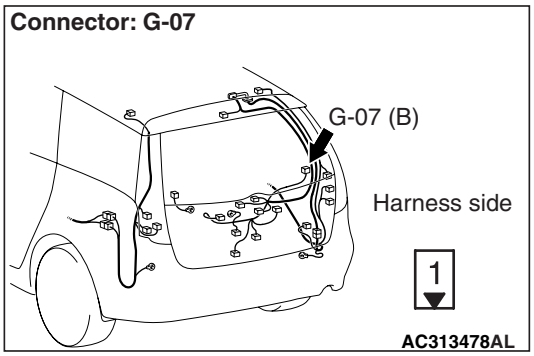

Q: Is the check result normal?
YES : Go to Step 3.
NO : Repair the connector.

STEP 3. Voltage measurement at G-07 rear window defogger connector.

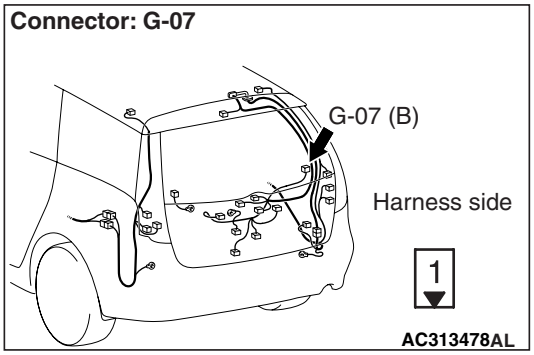

(1) Disconnect the connector, and measure at the wiring harness side.

(2) Turn the ignition switch to the "ON" position.

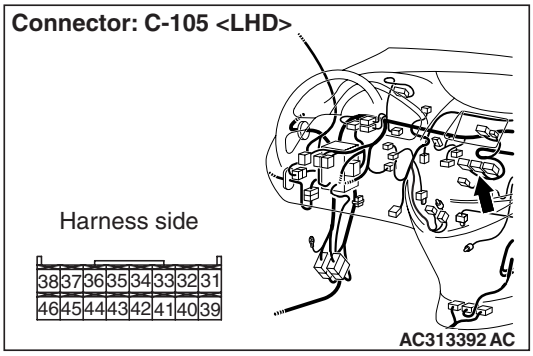

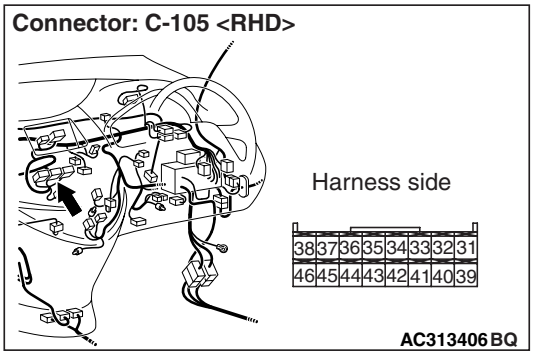

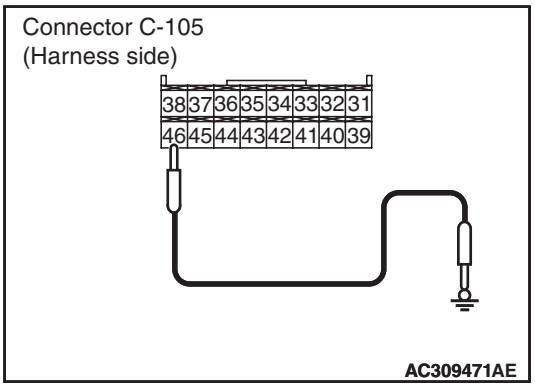

(3) Disconnect A/C-ECU connector C-105 and earth terminal 46.

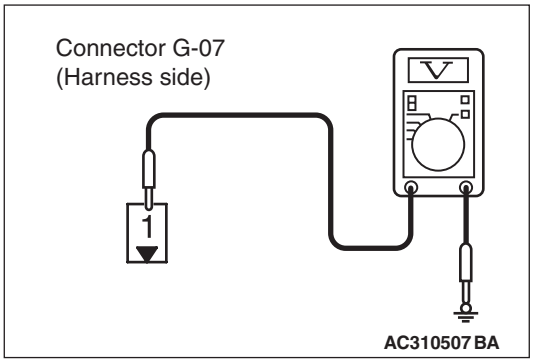

(4) Measure the voltage between terminal 1 and body earth.

OK: System voltage

Q: Is the check result normal?
YES : Go to Step 12.
NO : Go to Step 4.

Main Index
Group TOC

STEP 4. Connector check: C-208 rear window defogger relay connector

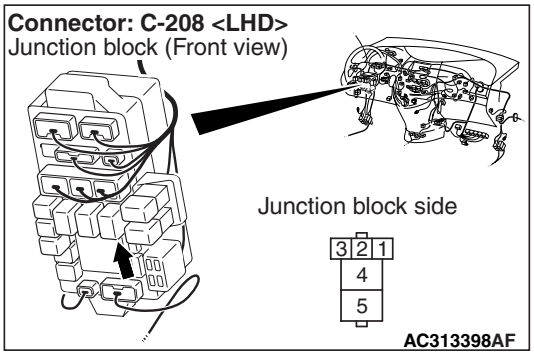

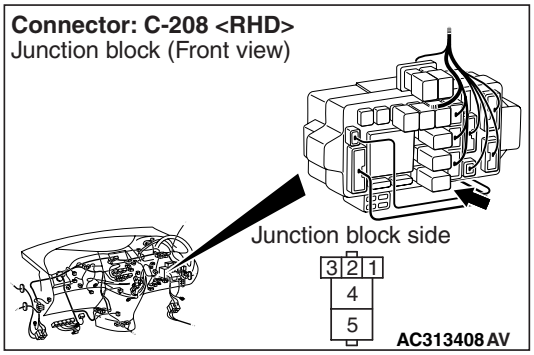

Q: Is the check result normal?
YES : Go to Step 5.
NO : Repair the connector.

STEP 5. Check the rear window defogger relay continuity.

Refer to P.54A-257.

Q: Is the rear window defogger relay in good condition?
YES : Go to Step 6.
NO : Replace the rear window defogger relay.

STEP 6. Voltage measurement at C-208 rear window defogger relay connector.

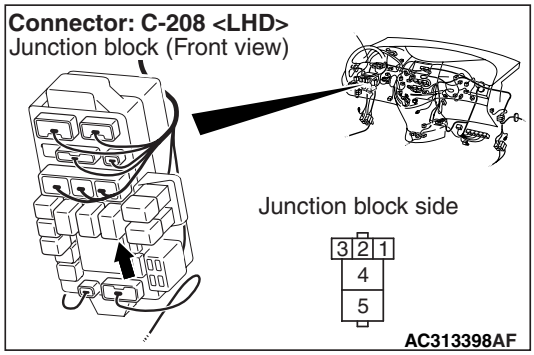

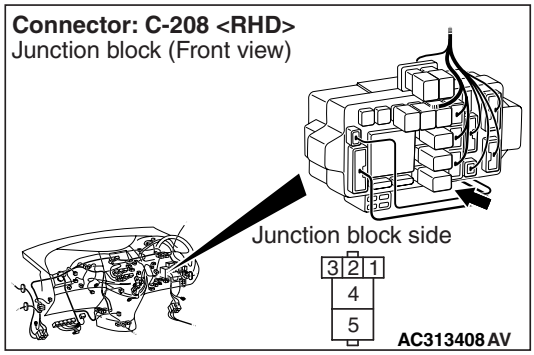

(1) Remove the relay, and measure at the junction block side.

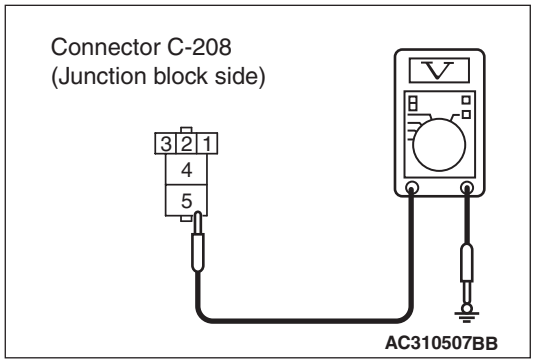

(2) Measure the voltage between terminal 5 and body earth.

OK: System voltage

Q: Is the check result normal?
YES : Go to Step 8.
NO : Go to Step 7.

Main Index
Group TOC

STEP 7. Check the wiring harness between C-208 rear window defogger relay connector terminal No.5 and the fusible link (30).

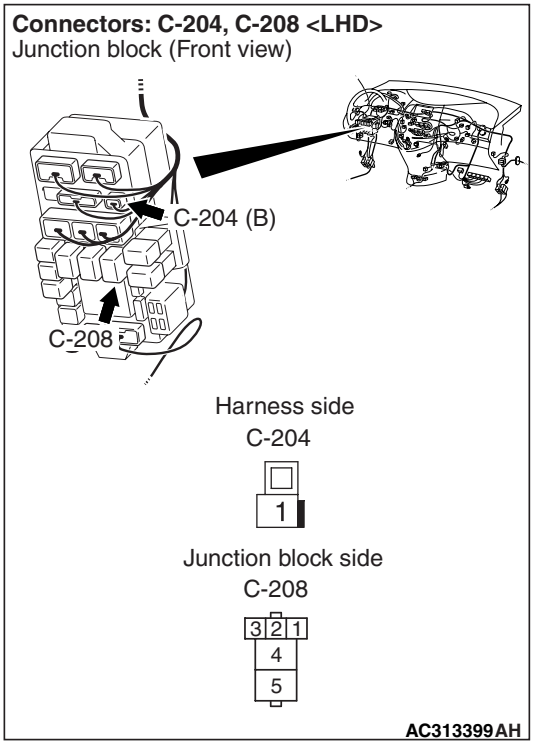

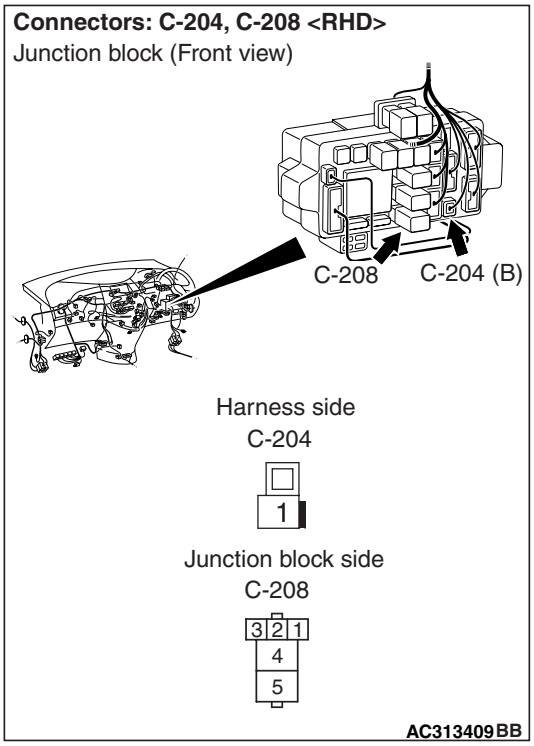

NOTE:

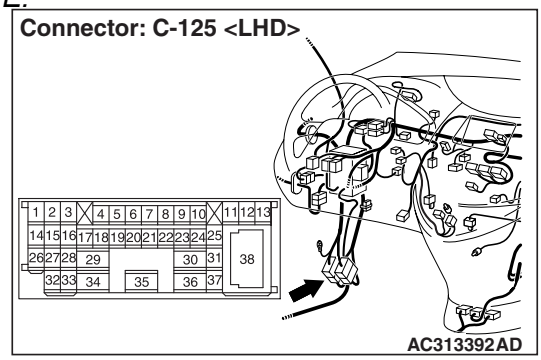

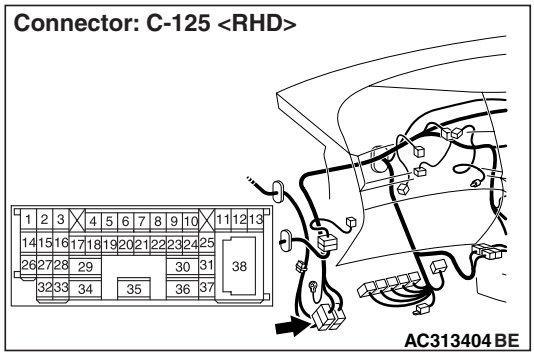

Prior to the wiring harness inspection, check intermediate connectors C-125, and junction block connector C-204, and repair if necessary.

- Check the rear window defogger relay power supply line for open or short circuit.

Q: Is the check result normal?

YES : The trouble can be an intermittent malfunction (Refer to GROUP 00, How to Cope with Intermittent Malfunction P.00-5).

NO : Repair the wiring harness.

Main Index
Group TOC

STEP 8. Voltage measurement at C-208 rear window defogger relay connector.

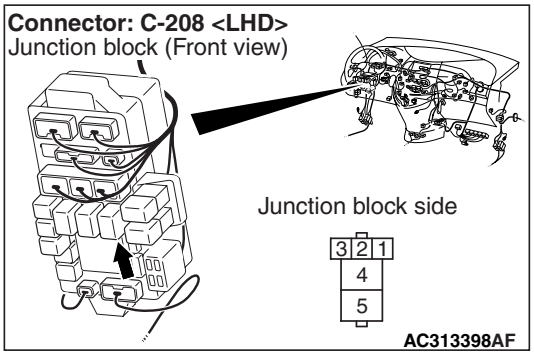

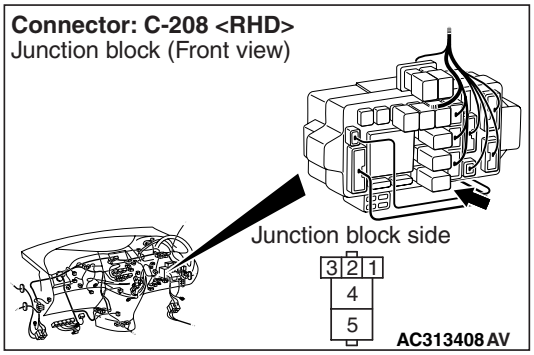

(1) Remove the relay, and measure at the junction block side.
(2) Turn the ignition switch to the "ON" earth position.

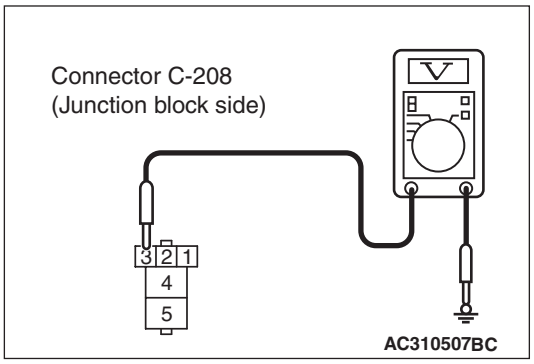

(3) Voltage between terminal 3 and body earth.

OK: System voltage

Q: Is the check result normal?
YES : Go to Step 10.
NO : Go to Step 9.

STEP 9. Check the wiring harness between C-208 rear window defogger relay connector No.3 and ignition switch (IG2).

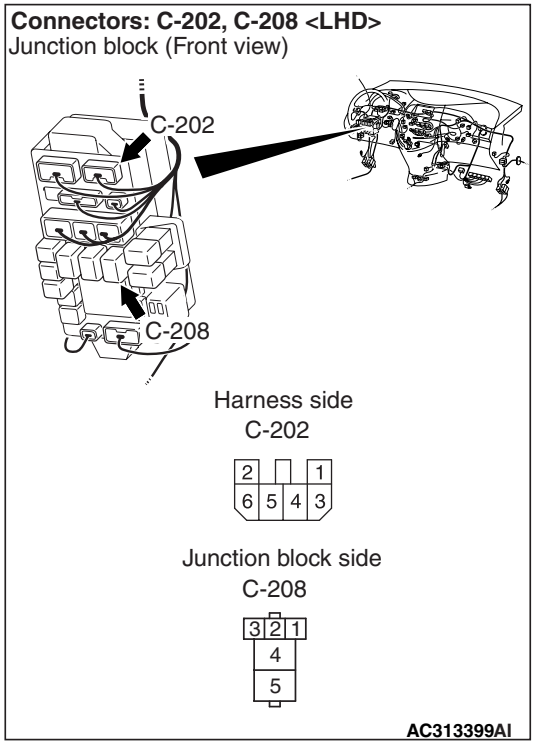

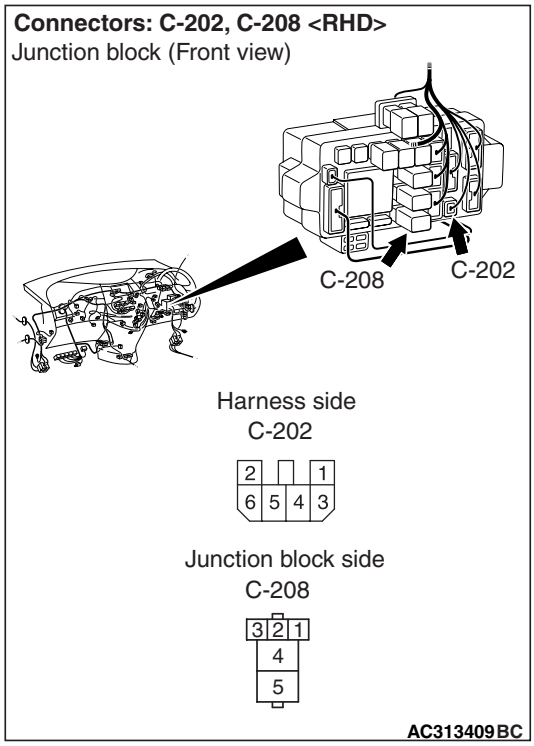

NOTE: Prior to the wiring harness inspection, check junction block connector C-202, and repair if necessary.

- Check the rear window defogger power supply line for open circuit.

Main Index
Group TOC

Q: Is the check result normal?

YES : The trouble can be an intermittent malfunction (Refer to GROUP 00, How to Cope with Intermittent Malfunction P.00-5).

NO : Repair the wiring harness.

STEP 10. Check the wiring harness between C-208 rear window defogger relay connector No.3 and C-106 A/C-ECU connector No.12.

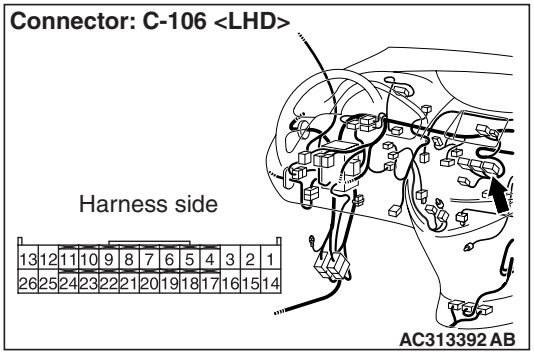

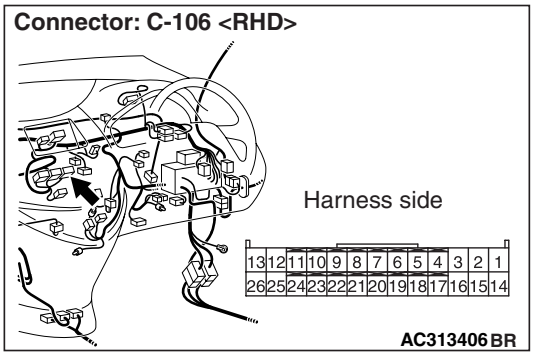

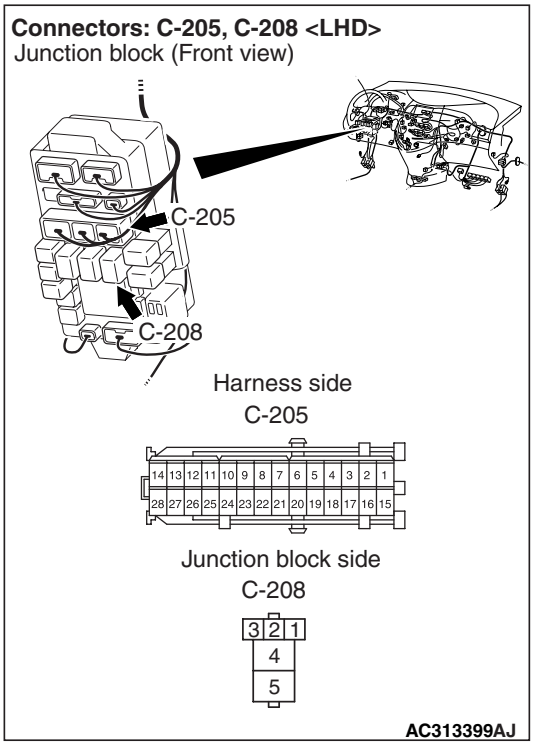

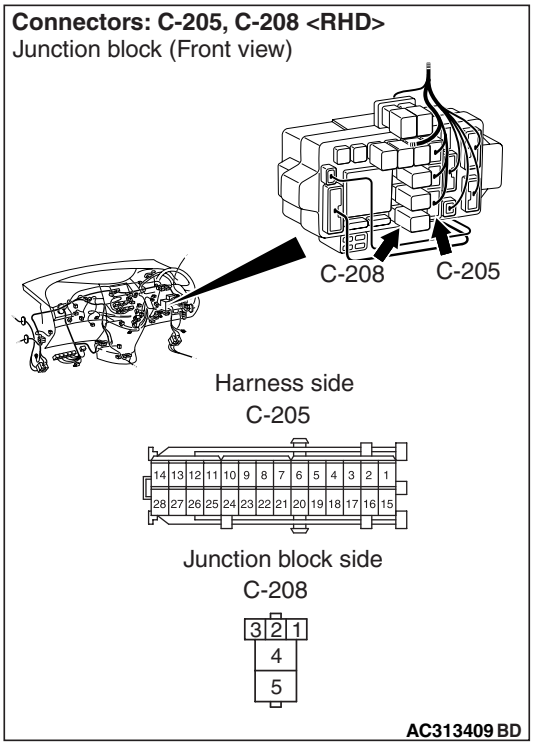

NOTE: Prior to the wiring harness inspection, check junction block connector C-205, and repair if necessary.

- Check the rear window defogger power supply line for open circuit.

Q: Is the check result normal?

YES : Go to Step 11.

NO : Repair the wiring harness.

Main Index
Group TOC

STEP 11. Check the wiring harness between C-208 rear window defogger relay connector No.4 and G-07 rear window defogger connector No.1.

Connectors: C-208, C-210 <LHD>
Junction block (Front view)

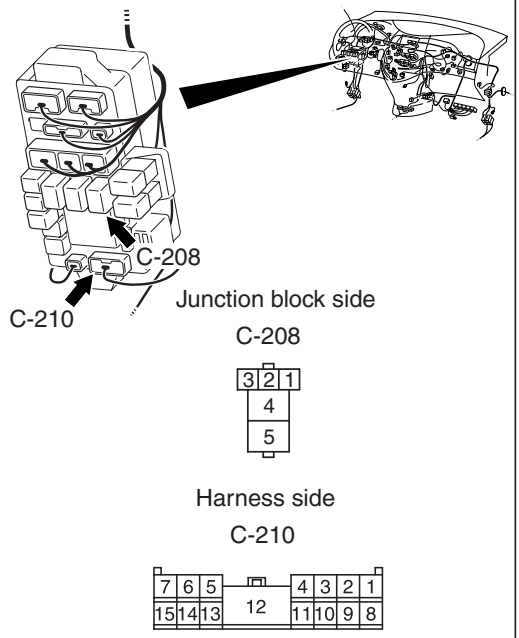

AC313399AK

Connectors: C-208, C-210 <RHD>
Junction block (Front view)

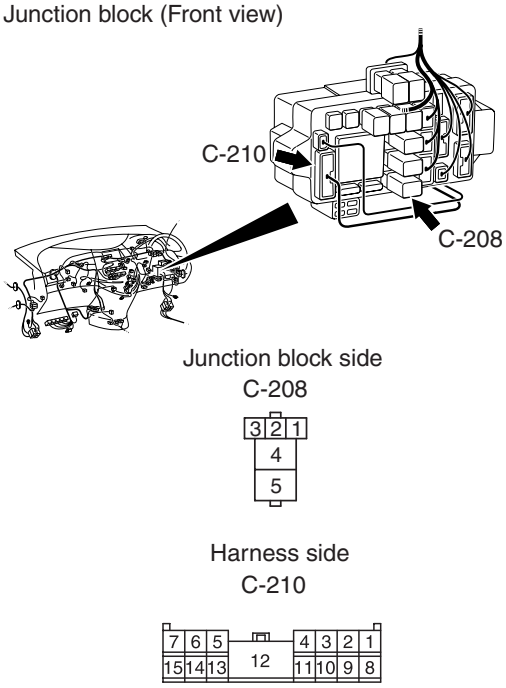

AC313409BE

Connectors: G-07, G-14 (Except vehicles for Hong Kong and Singapore)

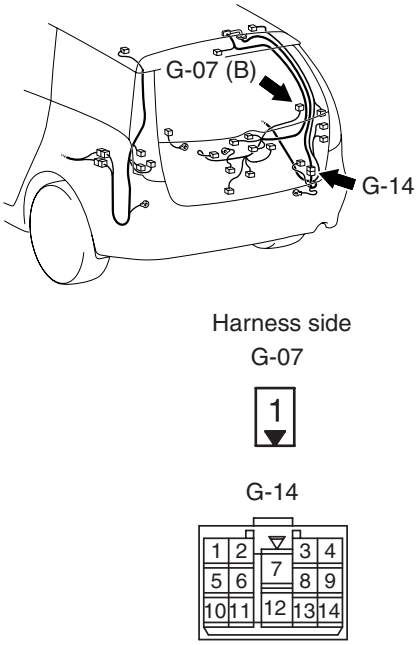

AC313479AB

Connectors: G-07, G-14 (Vehicles for Hong Kong and Singapore)

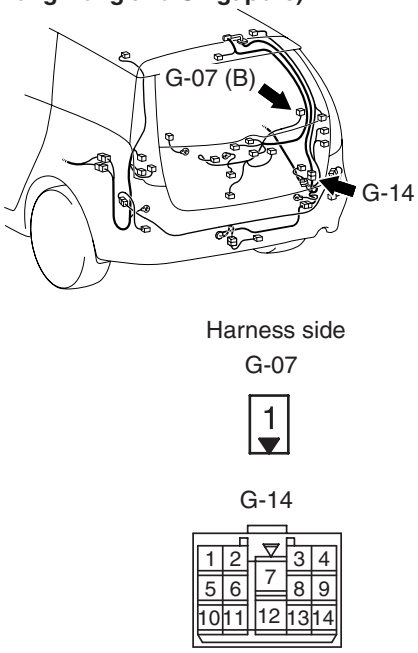

AC313482AB

NOTE: Prior to the wiring harness inspection, check junction block connector C-210 and intermediate connector G-14, and repair if necessary.

- Check the rear window defogger relay line for open or short circuit.

Q: Is the check result normal?

YES : The trouble can be an intermittent malfunction (Refer to GROUP 00, How to Cope with Intermittent Malfunction P.00-5).

NO : Repair the wiring harness.

Main Index
Group TOC

STEP 12. Connector check: G-02 rear window defogger connector

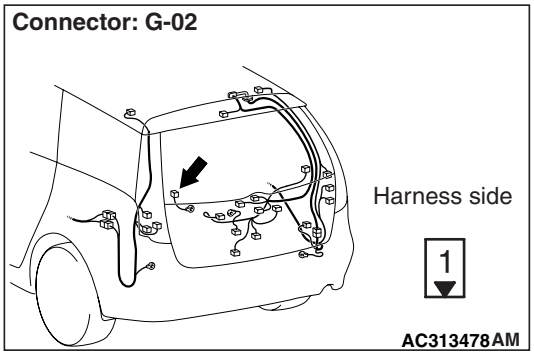

Q: Is the check result normal?
YES : Go to Step 13.
NO : Repair the connector.

STEP 13. Resistance measurement at G-02 rear window defogger connector.

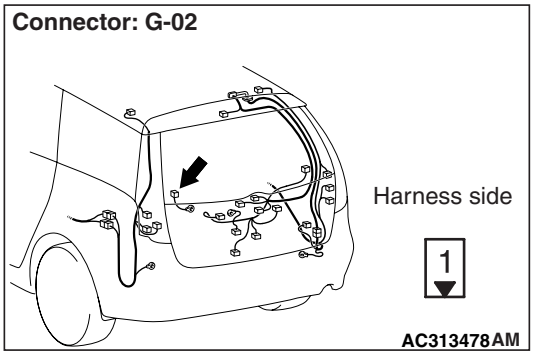

(1) Disconnect the connector, and measure at the wiring harness side.

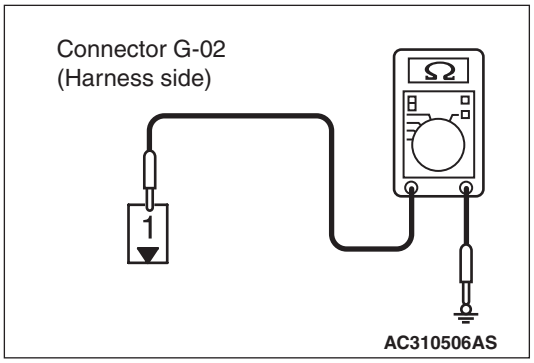

(2) Continuity between terminal 1 and body earth.

OK: 2Ω or less

Q: Is the check result normal?
YES : Go to Step 15.
NO : Go to Step 14.

STEP 14. Check the wiring harness between G-02 rear window defogger connector terminal No.1 and earth.

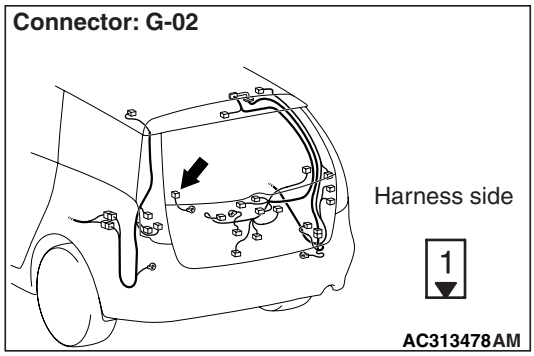

- Check the rear window defogger earth line for open or short circuit.

Q: Is the check result normal?
YES : The trouble can be an intermittent malfunction (Refer to GROUP 00, How to Cope with Intermittent Malfunction P.00-5).
NO : Repair or replace the wiring harness.

STEP 15. Check the rear window defogger.
Refer to GROUP 54A, Rear Window rear window defogger Inspection P.54A-257.

Q: Does the rear window defogger work normally?
YES : The trouble can be an intermittent malfunction (Refer to GROUP 00, How to Cope with Intermittent Malfunction P.00-5).
NO : Repair the rear window defogger.

Main Index
Group TOC

Inspection Procedure 14: The A/C indicator flashes

CIRCUIT OPERATION

If the A/C indicator flashes then the possible causes may be due to a defective A/C pressure system or insufficient refrigerant gas.

PROBABLE CAUSES

- Malfunction of the A/C pressure sensor
- Malfunction of the outside thermo sensor
- Malfunction of the A/C-ECU

DIAGNOSIS PROCEDURE

STEP 1. M.U.T.-III CAN bus diagnostics

Use the M.U.T.-III to diagnose the CAN bus lines.

Q: Is the check result normal?

YES : Go to Step 2.

NO : Repair the CAN bus lines. (Refer to GROUP 54F – Troubleshooting P.54F-13.)

STEP 2. M.U.T.-III diagnosis code

Check whether the air conditioner sets a diagnosis code or not.

Q: Is the check result normal?

YES : Go to Step 3.

NO : Refer to diagnosis code chart P.55-8.

STEP 3. M.U.T.-III data list

Check that the following service data display contents are normal. (Refer to P.55-198.)

- Item 04: Pressure sensor

Q: Is the check result normal?

YES : Go to Step 4.

NO : Inspection Procedure 20: Refer to A/C pressure sensor system <Except vehicles for Hong Kong and Singapore>P.55-147 or Inspection Procedure 21: Refer to A/C pressure sensor system <Vehicles for Hong Kong and Singapore>P.55-150 .

STEP 4. Check the refrigerant level.

Refer to P.55-206.

Q: Is the refrigerant level correct?

YES : Go to Step 5.

NO : Correct the refrigerant level (Refer to On-vehicle Service P.55-206).

STEP 5. Recheck the trouble symptom

Q: Is the check result normal?

YES : Intermittent malfunction. (Refer to GROUP 00 – How to Cope with Intermittent Malfunction P.00-5.)

NO : Inspection Procedure 20: Refer to A/C pressure sensor system <Except vehicles for Hong Kong and Singapore>P.55-147 or Inspection Procedure 21: Refer to A/C pressure sensor system <Vehicles for Hong Kong and Singapore>P.55-150 .

Main Index
Group TOC

Inspection Procedure 15: Rear blower does not work <Vehicle with rear heater or rear cooler>

Rear Heater Controller Circuit <LHD>

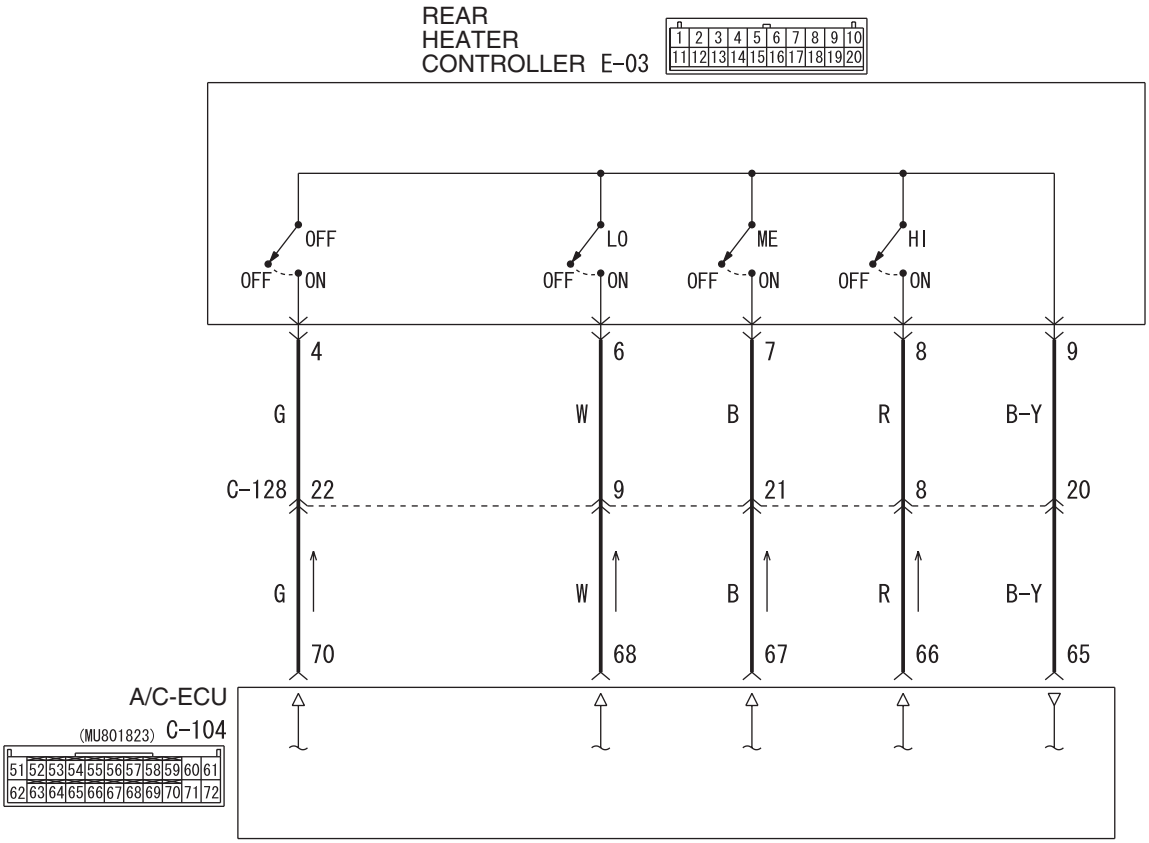

Wire colour code
B : Black LG : Light green G : Green L : Blue W : White Y : Yellow SB : Sky blue
BR : Brown O : Orange GR : Grey R : Red P : Pink V : Violet PU : Purple

W6X55X009A

Main Index
Group TOC

Rear Heater Controller Circuit <RHD>

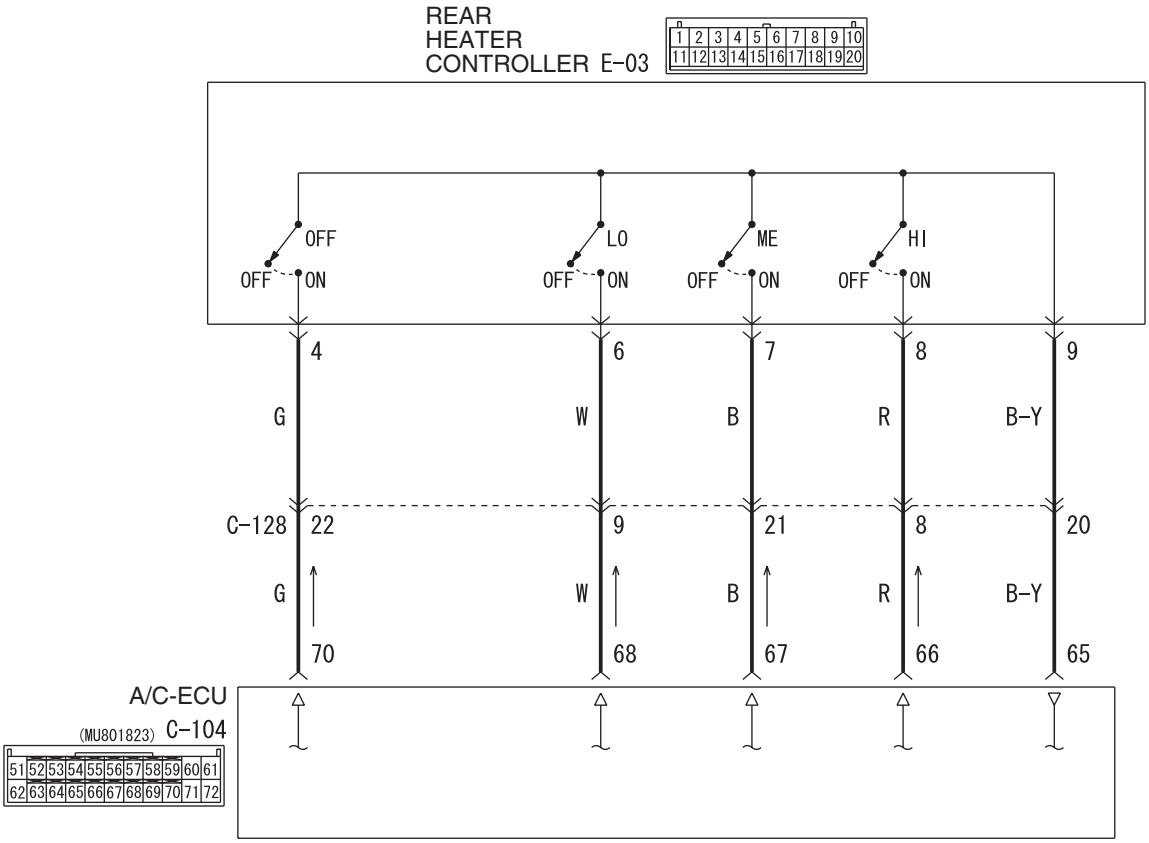

Wire colour code
B : Black LG : Light green G : Green L : Blue W : White Y : Yellow SB : Sky blue
BR : Brown O : Orange GR : Grey R : Red P : Pink V : Violet PU : Purple

W6X55X010A

COMMENTS ON TROUBLE SYMPTOM

If the rear blower motor does not operate, the rear blower motor circuit system may be defective.

PROBABLE CAUSES

- Malfunction of rear blower relay
- Malfunction of rear blower motor
- Malfunction of rear power transistor
- Malfunction of the A/C-ECU
- Damaged harness wires and connectors

DIAGNOSIS PROCEDURE

STEP 1. M.U.T.-III diagnosis code

Check whether the air conditioner sets a diagnosis code or not.

Q: Is the check result normal?
YES : Go to Step 2.
NO : Refer to diagnosis code chart P.55-8.

STEP 2. M.U.T.-III actuator test

Carry out the actuator test. (Refer to P.55-201.)

- Item 04: Rear blower fan: OFF
- Item 05: Rear blower fan: AUTO <vehicles with dual automatic A/C>
- Item 06: Rear blower fan: Lo
- Item 07: Rear blower fan: Middle
- Item 08: Rear blower fan: High

Q: Does the rear blower motor work normally?
YES : Go to Step 3.
NO : Go to Step 9.

Main Index
Group TOC

STEP 3. M.U.T.-III data list

Check that the following service data display contents are normal. (Refer to P.55-198.)

- Item 22: Rear blower fan
- Item 23: Rear blower fan (Target)
- Item 31: Rear fan SW (Front)
- Item 32: Rear control OFF switch
- Item 33: Rear control fan OFF switch

Q: Is the check result normal?

YES : Go to Step 8.

NO <Item 22, 23, 32, 33 is abnormal> : Go to Step 4.

NO <Item 31 is abnormal> : Refer to Inspection Procedure 22: Rear fan switch system <Except vehicles for Hong Kong and Singapore>P.55-152 or Inspection Procedure 23: Rear fan switch system <Vehicles for Hong Kong and Singapore>P.55-156 .

STEP 4. Connector check: E-03 rear heater controller connector

Connector: E-03 <LHD (Vehicles without sunroof)>

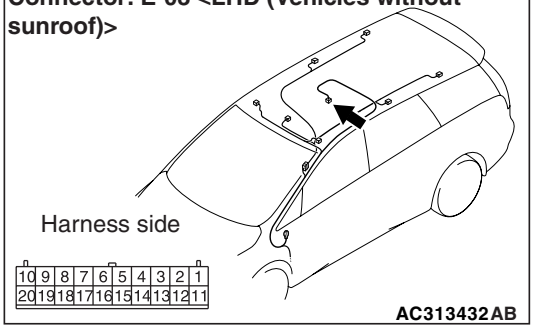

AC313432AB

Connector: E-03 <LHD (Vehicles with sunroof)>

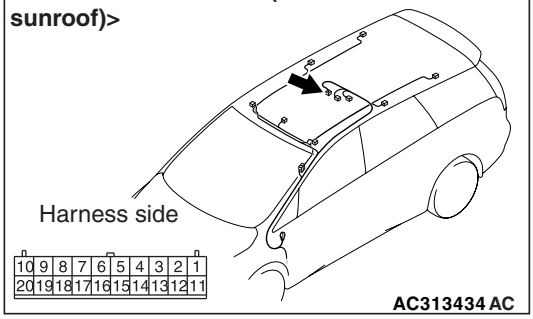

AC313434AC

Connector: E-03 <RHD (Vehicles without sunroof)>

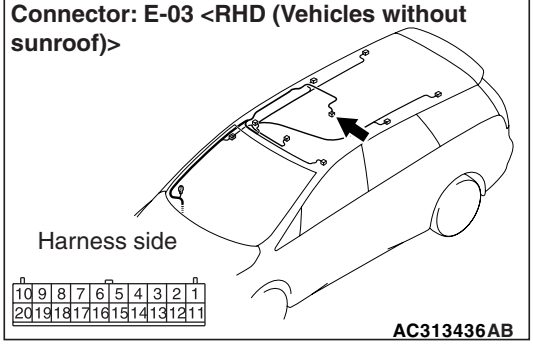

AC313436AB

Connector: E-03 <RHD (Vehicles with sunroof)>

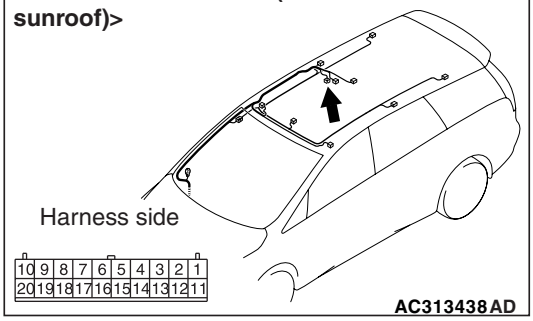

AC313438AD

Q: Is the check result normal?

YES : Go to Step 5.

NO : Repair the connector.

STEP 5. Check the rear heater controller

Refer to P.55-229.

Q: Is the check result normal?

YES : Go to Step 6.

NO : Replace the rear heater controller.

Main Index
Group TOC

STEP 6. Connector check: C-104 A/C-ECU

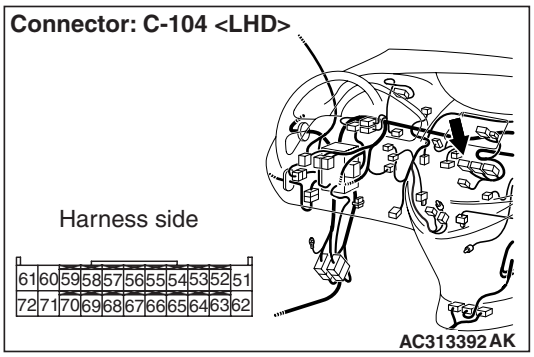

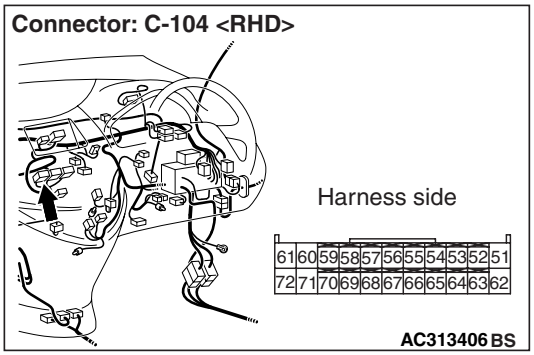

Q: Is the check result normal?
YES : Go to Step 7.
NO : Repair the connector.

STEP 7. Check the wiring harness between E-03 rear heater controller connector (terminals 4, 6, 7, 8 and 9) and C-104 A/C-ECU connector (terminals 70, 68, 67, 66 and 65).

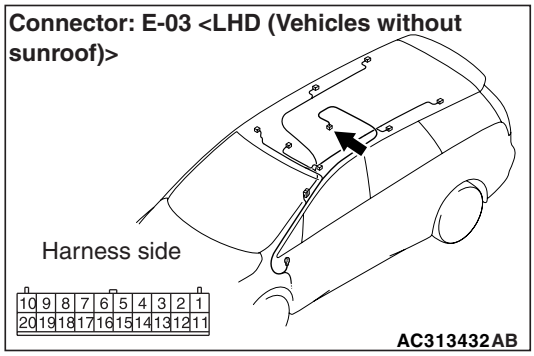

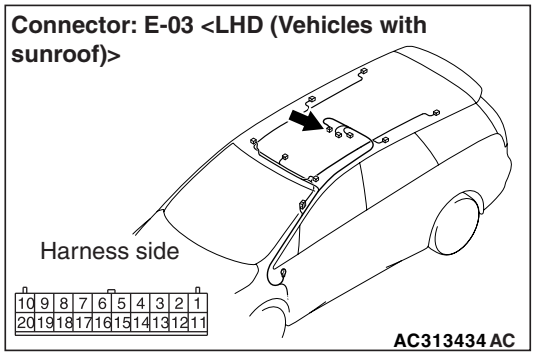

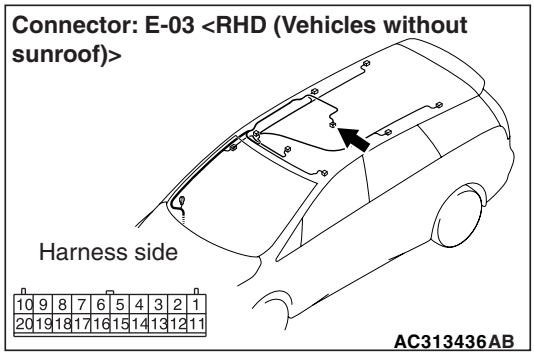

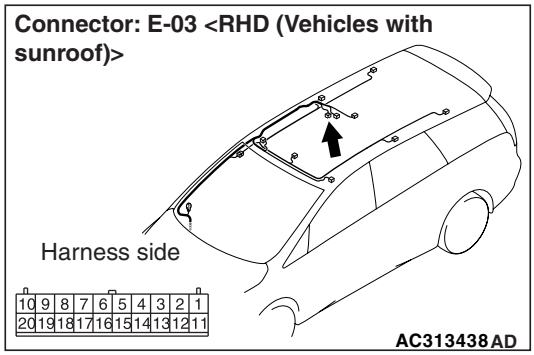

Main Index
Group TOC

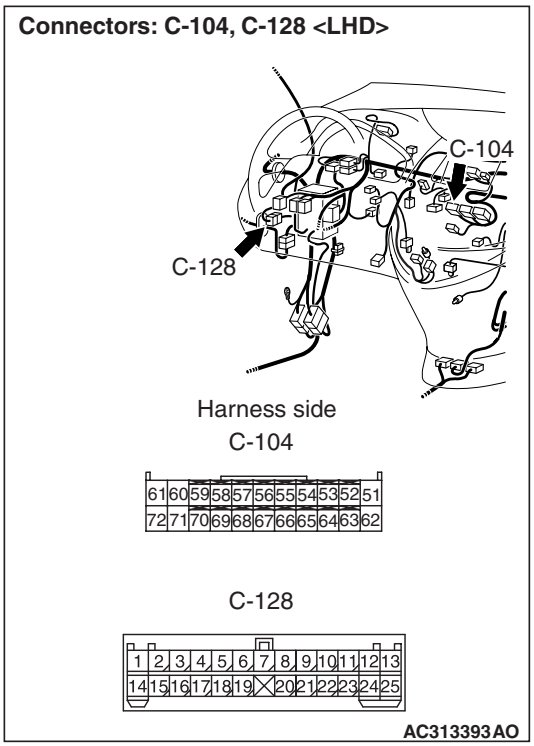

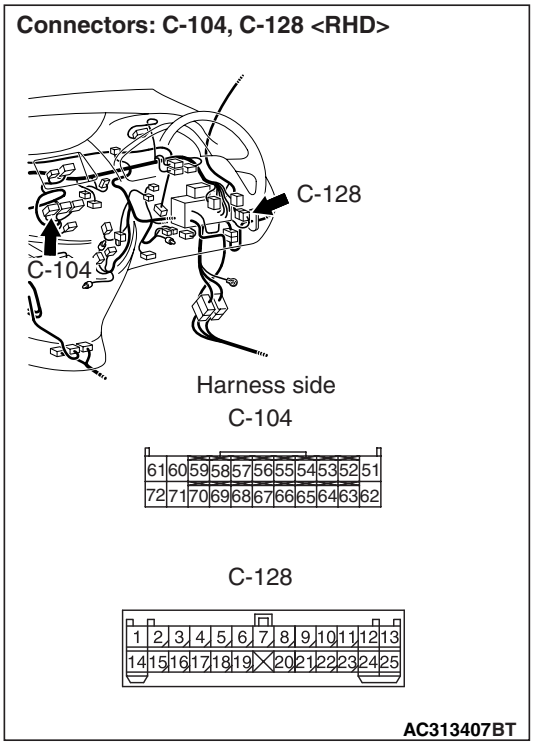

NOTE: Prior to the wiring harness inspection, check intermediate connector C-128, and repair if necessary.

- Check the input line for open circuit.

Q: Is the check result normal?

YES : Go to Step 8.

NO : Repair the wiring harness.

STEP 8. Recheck the trouble symptom

Q: Is the check result normal?

YES : The trouble can be an intermittent malfunction (Refer to GROUP 00, How to Cope with Intermittent Malfunction P.00-5).

NO : Replace the A/C-ECU.

STEP 9. Connector check: C-215 rear blower relay connector

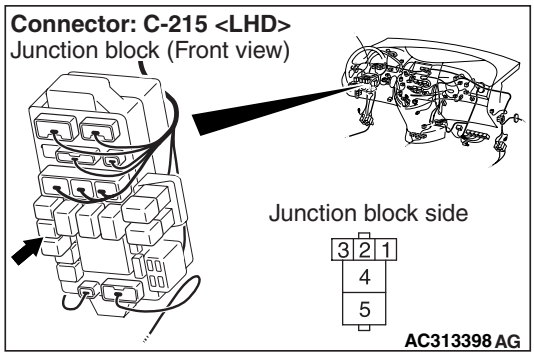

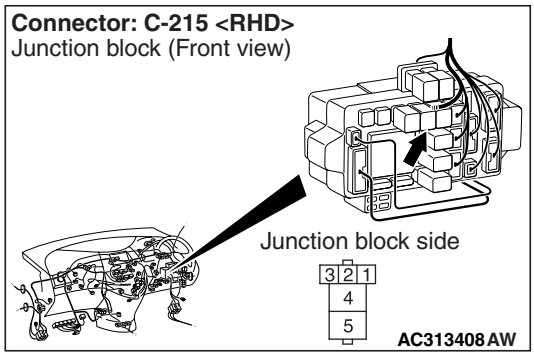

Q: Is the check result normal?

YES : Go to Step 10.

NO : Repair the connector.

STEP 10. Check the rear blower relay

Refer to P.55-208.

Q: Is the check result normal?

YES : Refer to Inspection Procedure 24: Rear blower motor power supply system <Except vehicles for Hong Kong and Singapore>P.55-160 or Inspection Procedure 25: Rear blower motor power supply system <Vehicles for Hong Kong and Singapore>P.55-171 .

NO : Replace the rear blower relay.

Main Index
Group TOC

Inspection Procedure 16: Rear blower does not work <Vehicles with dual automatic A/C>

Rear Heater Controller Circuit <LHD>

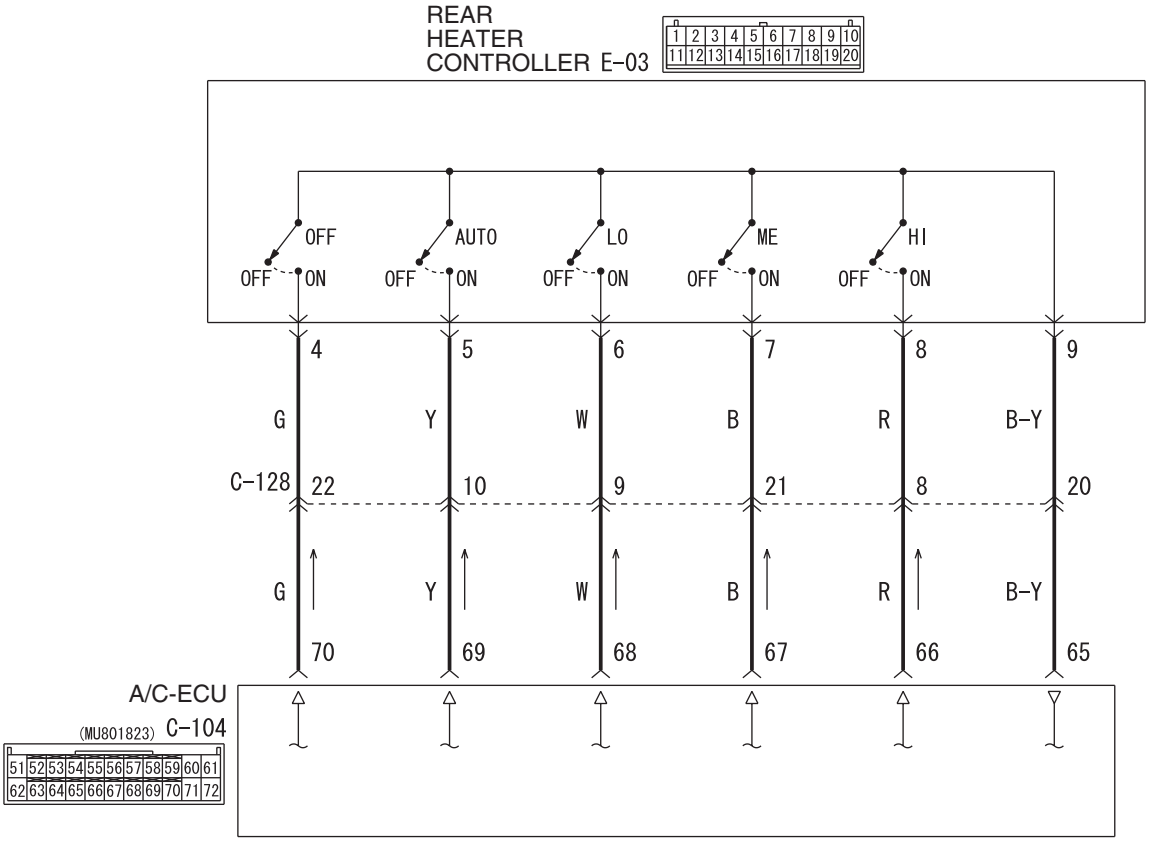

Wire colour code
B : Black LG : Light green G : Green L : Blue W : White Y : Yellow SB : Sky blue
BR : Brown O : Orange GR : Grey R : Red P : Pink V : Violet PU : Purple

W6X55X011A

Main Index
Group TOC

Rear Heater Controller Circut <RHD>

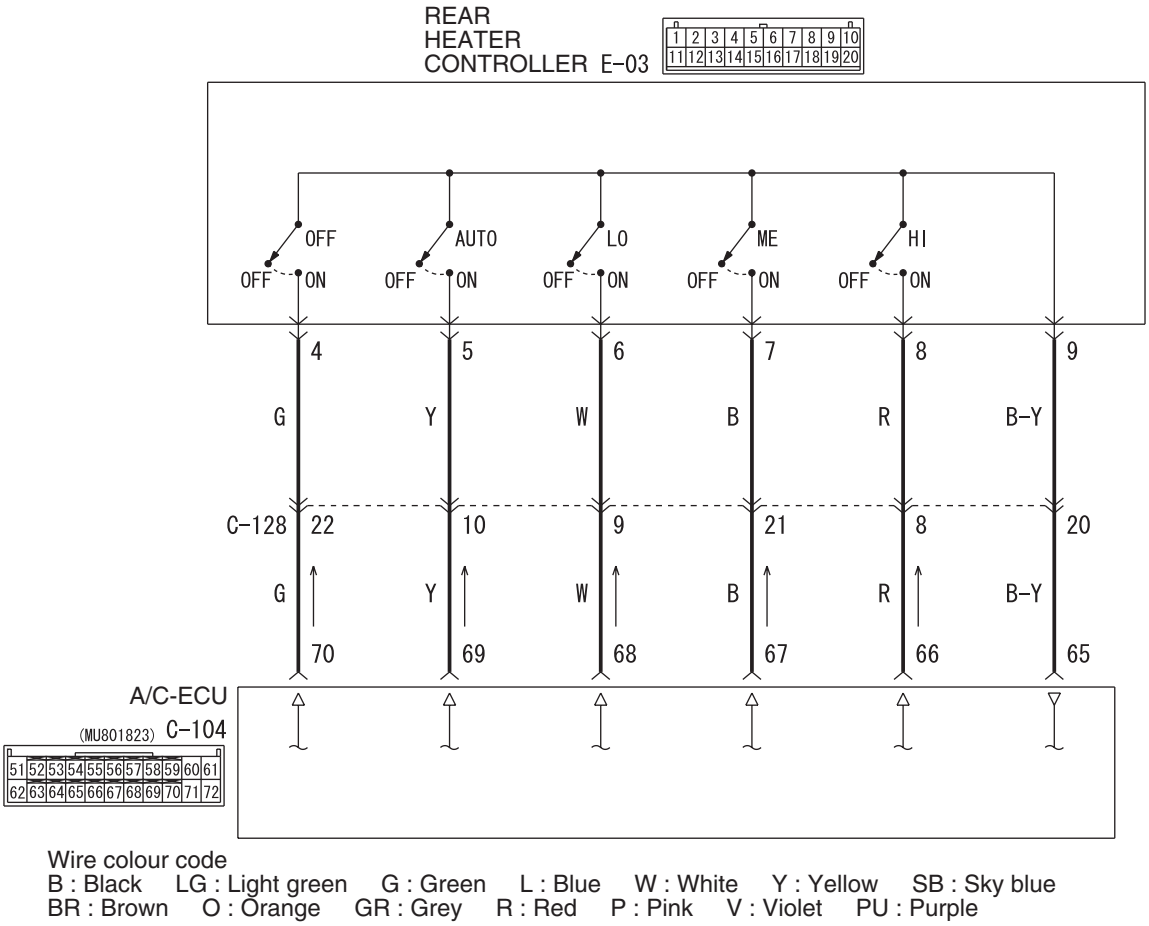

COMMENTS ON TROUBLE SYMPTOM

If the rear blower motor does not operate, the rear blower motor circuit system may be defective.

PROBABLE CAUSES

- Malfunction of rear blower relay
- Malfunction of rear blower motor
- Malfunction of rear power transistor
- Malfunction of the A/C-ECU
- Damaged harness wires and connectors

DIAGNOSIS PROCEDURE

STEP 1. M.U.T.-III diagnosis code

Check whether the air conditioner sets a diagnosis code or not.

Q: Is the check result normal?
YES : Go to Step 2.
NO : Refer to diagnosis code chart P.55-8.

STEP 2. M.U.T.-III actuator test

Check that the following actuator test can be executed normally. (Refer to P.55-201.)

- Item 04: Rear blower fan: OFF
- Item 05: Rear blower fan: AUTO <vehicles with dual automatic A/C>
- Item 06: Rear blower fan: Lo
- Item 07: Rear blower fan: Middle
- Item 08: Rear blower fan: High

Q: Does the rear blower motor work normally?
YES : Go to Step 3.
NO : Go to Step 9.

Main Index
Group TOC

STEP 3. M.U.T.-III data list

Check that the following service data display contents are normal. (Refer to P.55-198.)

- Item 22: Rear blower fan
- Item 23: Rear blower fan (Target)
- Item 31: Rear fan SW (Front)
- Item 32: Rear control OFF switch
- Item 33: Rear control fan OFF switch

Q: Is the check result normal?

YES : Go to Step 8.

NO <Item 22, 23, 32, 33 is abnormal> : Go to Step 4.

NO <Item 31 is abnormal> : Refer to Inspection Procedure 22: Rear fan switch system <Except vehicles for Hong Kong and Singapore>P.55-152 or Inspection Procedure 23: Rear fan switch system <Vehicles for Hong Kong and Singapore>P.55-156 .

STEP 4. Connector check: E-03 rear heater controller connector

Connector: E-03 <LHD (Vehicles without sunroof)>

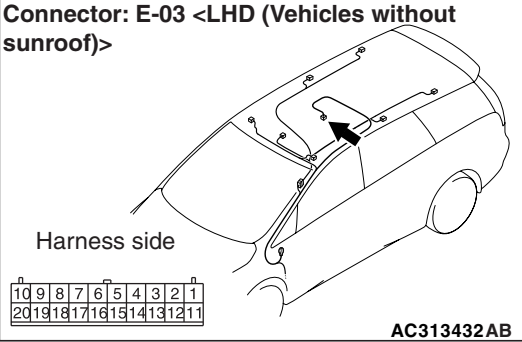

AC313432AB

Connector: E-03 <LHD (Vehicles with sunroof)>

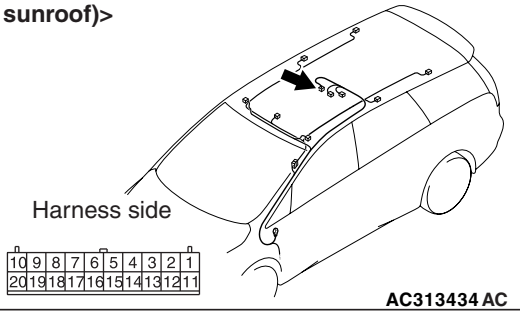

AC313434AC

Connector: E-03 <RHD (Vehicles without sunroof)>

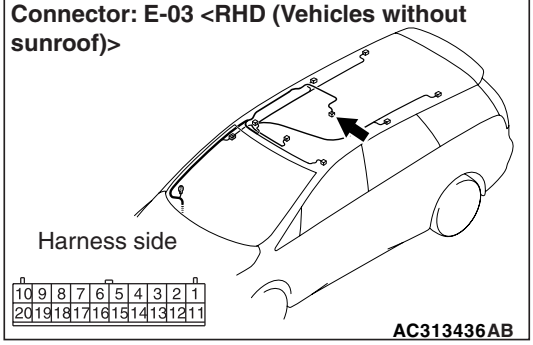

AC313436AB

Connector: E-03 <RHD (Vehicles with sunroof)>

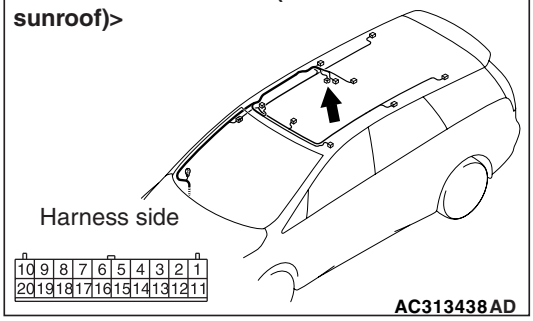

AC313438AD

Q: Is the check result normal?

YES : Go to Step 5.

NO : Repair the connector.

STEP 5. Check the rear heater controller

Refer to P.55-229.

Q: Is the check result normal?

YES : Go to Step 6.

NO : Replace the rear heater controller.

STEP 6. Connector check: C-104 A/C-ECU

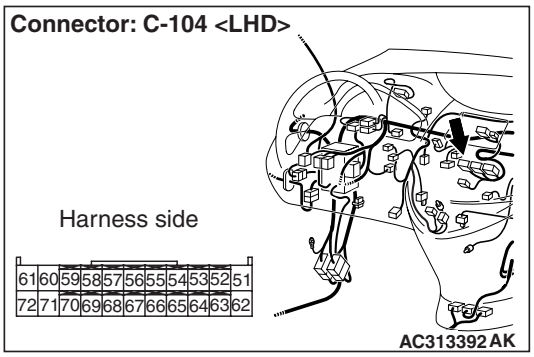

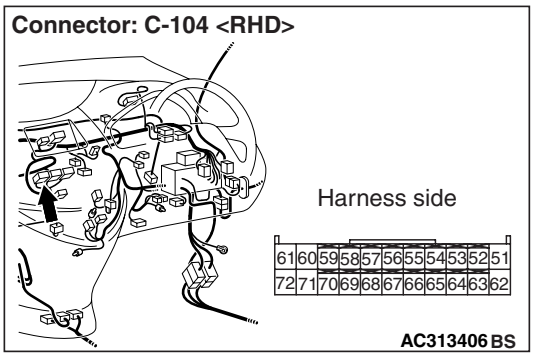

Q: Is the check result normal?
YES : Go to Step 7.
NO : Repair the connector.

STEP 7. Check the wiring harness between E-03 rear heater controller connector (terminals 4, 5, 6, 7, 8 and 9) and C-104 A/C-ECU connector (terminals 70, 69, 68, 67, 66 and 65).

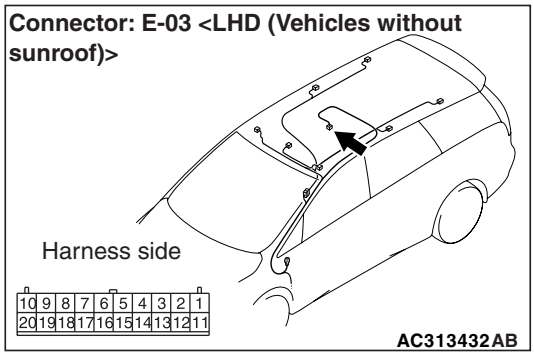

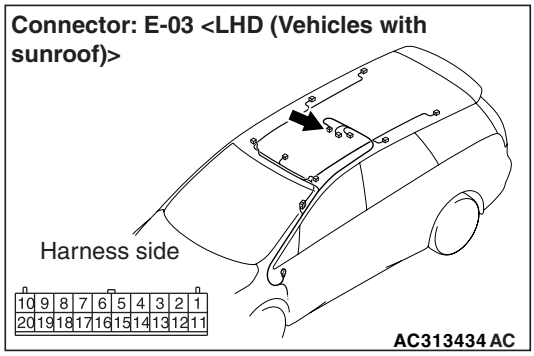

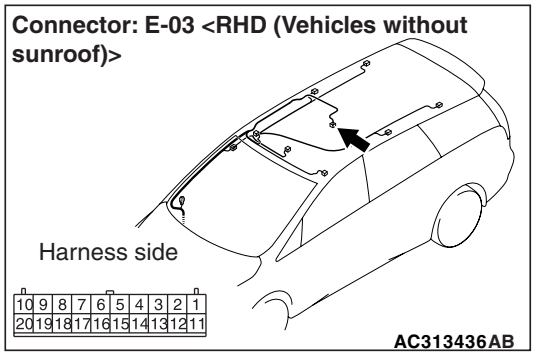

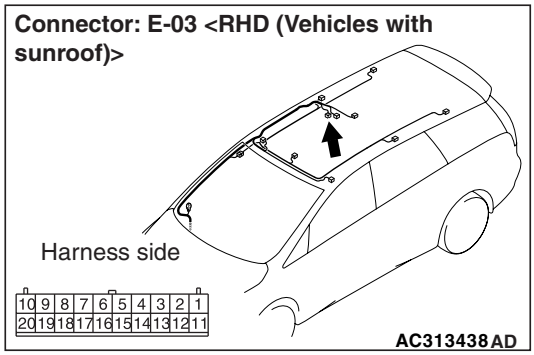

Main Index
Group TOC

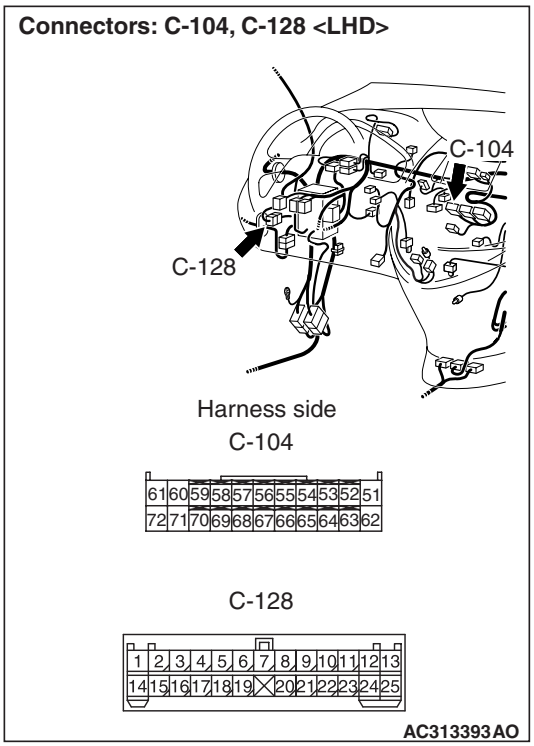

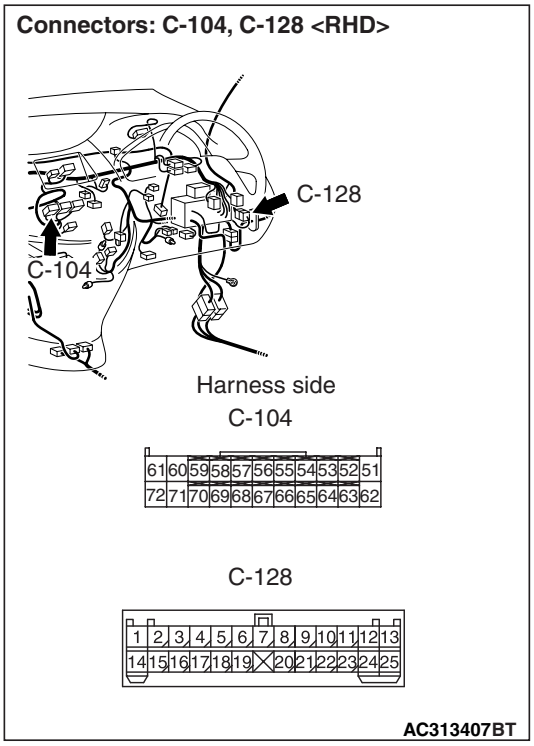

NOTE: Prior to the wiring harness inspection, check intermediate connector C-128, and repair if necessary.

- Check the input line for open circuit.

Q: Is the check result normal?

YES : Go to Step 8.

NO : Repair the wiring harness.

STEP 8. Recheck the trouble symptom

Q: Is the check result normal?

YES : The trouble can be an intermittent malfunction (Refer to GROUP 00, How to Cope with Intermittent Malfunction P.00-5).

NO : Replace the A/C-ECU.

STEP 9. Connector check: C-215 rear blower relay connector

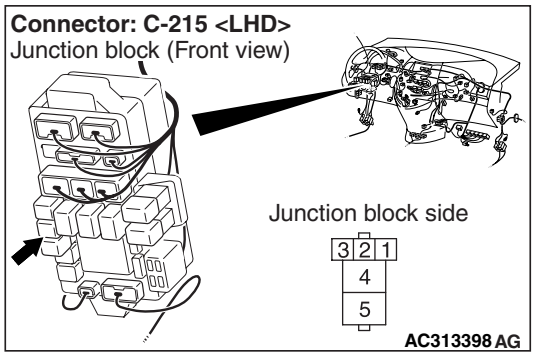

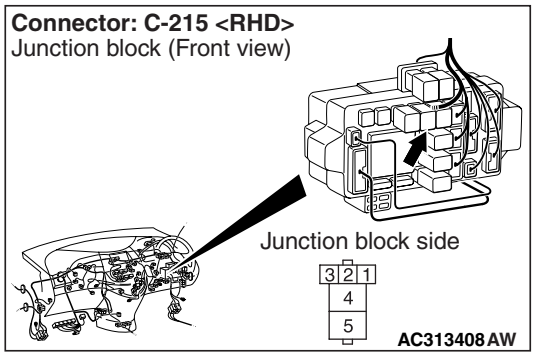

Q: Is the check result normal?

YES : Go to Step 10.

NO : Repair the connector.

STEP 10. Check the rear blower relay

Refer to P.55-208.

Q: Is the check result normal?

YES : Refer to Inspection Procedure 24: Rear blower motor power supply system <Except vehicles for Hong Kong and Singapore>P.55-160 or Inspection Procedure 25: Rear blower motor power supply system <Vehicles for Hong Kong and Singapore>P.55-171 .

NO : Replace the rear blower relay.

Main Index
Group TOC

Inspection Procedure 17: Air volume of rear blower cannot be changed

Rear Blower Motor Circuit

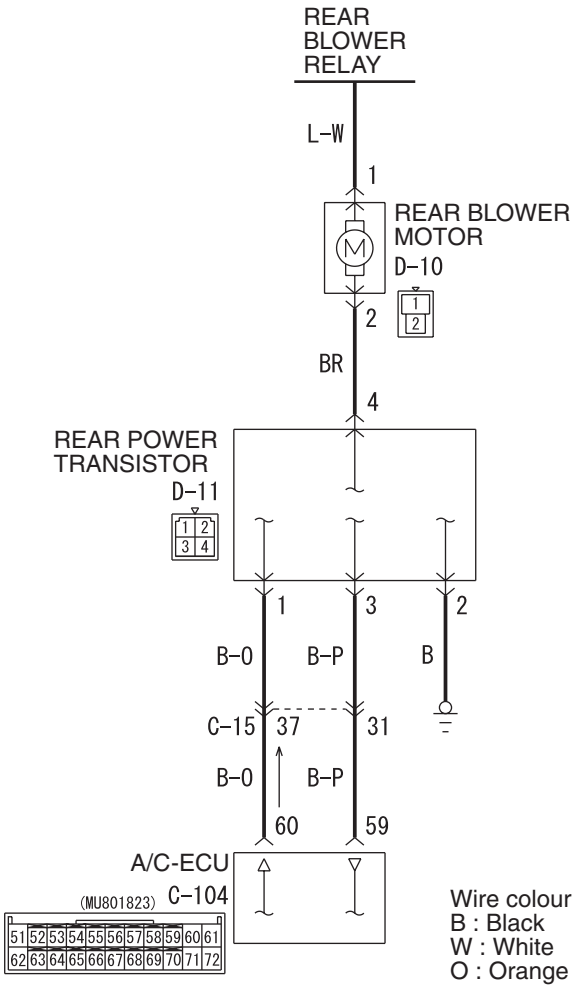

Wire colour code
B : Black LG : Light green G : Green L : Blue
W : White Y : Yellow SB : Sky blue BR : Brown
O : Orange GR : Gray R : Red P : Pink V : Violet

W4X55E045A

COMMENTS ON TROUBLE SYMPTOM

If the blower air volume can not be changed when the blower switch is operated, the wiring harness between A/C-ECU and rear heater controller, and rear power transistor circuit system may be defective.

PROBABLE CAUSES

- Malfunction of rear power transistor
- Malfunction of the A/C-ECU
- Damaged harness wires and connectors

DIAGNOSIS PROCEDURE

STEP 1. M.U.T.-III diagnosis code

Check whether the air conditioner sets a diagnosis code or not.

Q: Is the check result normal?
YES : Go to Step 2.
NO : Refer to diagnosis code chart P.55-8.

Main Index
Group TOC

STEP 2. M.U.T.-III actuator test

Carry out the actuator test. (Refer to P.55-201.)

- Item 04: Rear Blower fan: OFF
- Item 05: Rear Blower fan: AUTO <vehicles with dual automatic A/C>
- Item 06: Rear Blower fan: Lo
- Item 07: Rear Blower fan: Middle
- Item 08: Rear Blower fan: High

Q: Does the blower motor work normally?

YES : Go to Step 3.
NO : Go to Step 4.

STEP 3. M.U.T.-III data list

Check that the following service data display contents are normal. (Refer to P.55-198.)

- Item 22: Rear blower motor
- Item 23: Rear blower motor (target value)
- Item 32: Rear control OFF SW
- Item 33: Rear control FAN SW

Q: Is the check result normal?

YES : Go to Step 10.
NO : Refer to Inspection Procedure 15: Rear blower does not work <Vehicle with rear heater or rear cooler>P.55-127 or Inspection Procedure 16: Rear blower does not work <Vehicle with dual automatic A/C>P.55-132 .

STEP 4. Connector check: D-11 rear power transistor connector

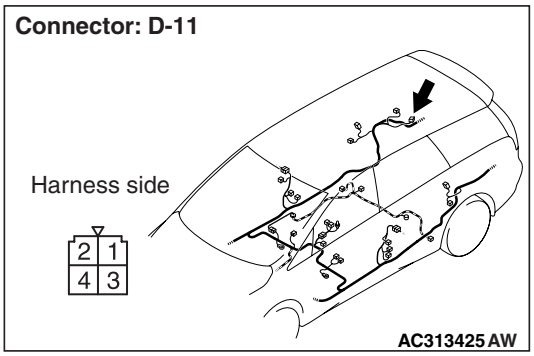

Q: Is the check result normal?

YES : Go to Step 5.
NO : Repair the connector.

STEP 5. Resistance measurement at D-11 rear power transistor connector.

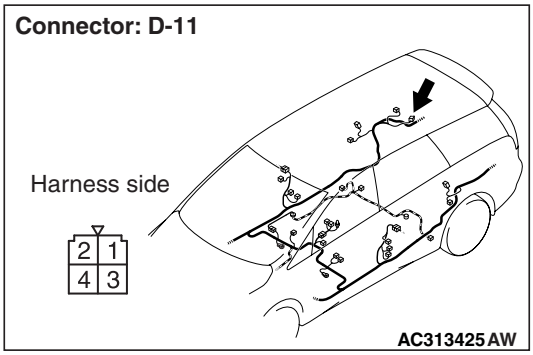

(1) Disconnect the connector, and measure at the wiring harness side.

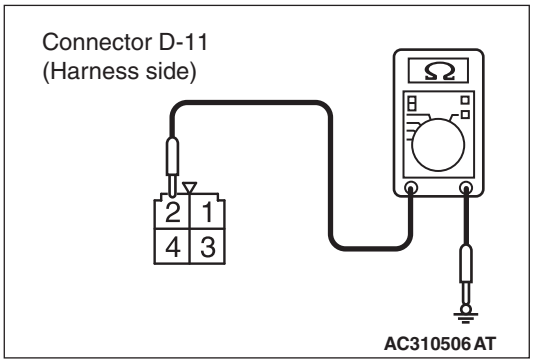

(2) Continuity between terminal 2 and body earth.

OK: 2 ohm or less

Q: Is the check result normal?

YES : Go to Step 7.
NO : Go to Step 6.

STEP 6. Check the wiring harness between D-11 rear power transistor connector terminal No.2 and earth.

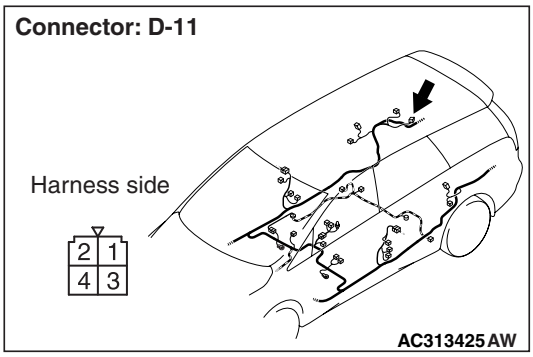

- Check the rear window defogger earth line for open or short circuit.

Q: Is the check result normal?

YES : The trouble can be an intermittent malfunction (Refer to GROUP 00, How to Cope with Intermittent Malfunction P.00-5).
NO : Repair or replace the wiring harness.

Main Index
Group TOC

STEP 7. Connector check: C-104 A/C-ECU connector

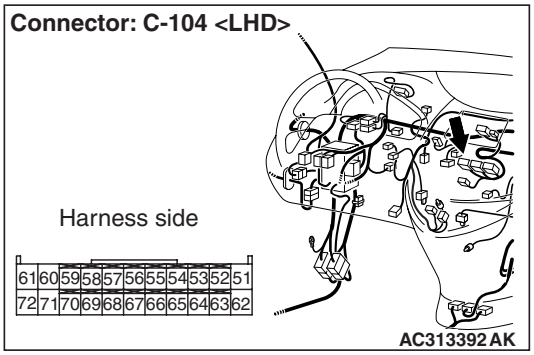

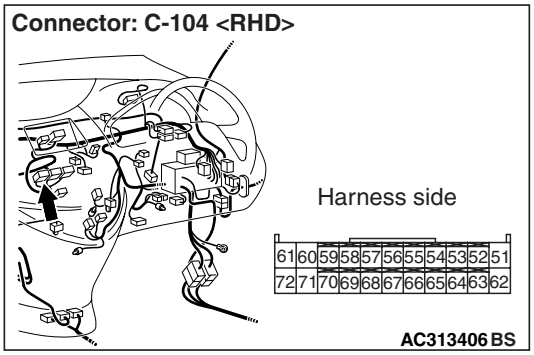

Q: Is the check result normal?
YES : Go to Step 8.
NO : Repair the connector.

STEP 8. Check the wiring harness between D-11 rear power transistor connector (terminal 1 and 3) and C-104 A/C-ECU connector (terminal 60 and 59).

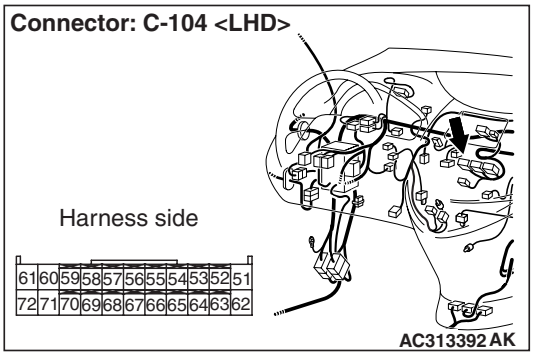

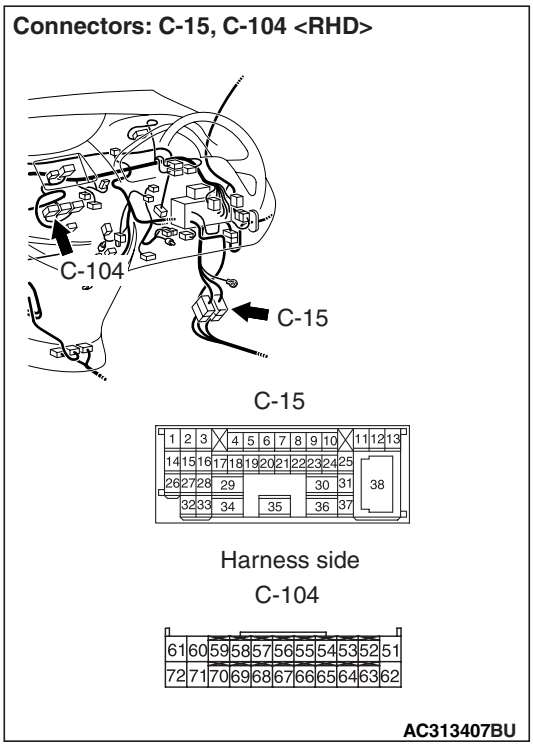

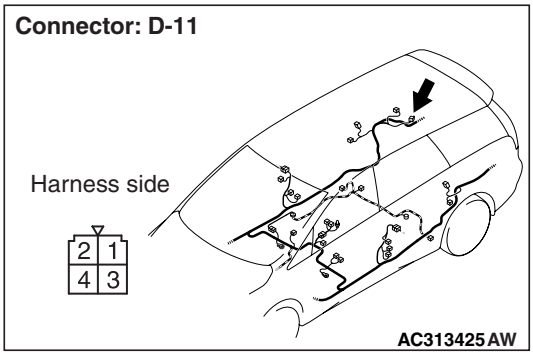

Main Index
Group TOC

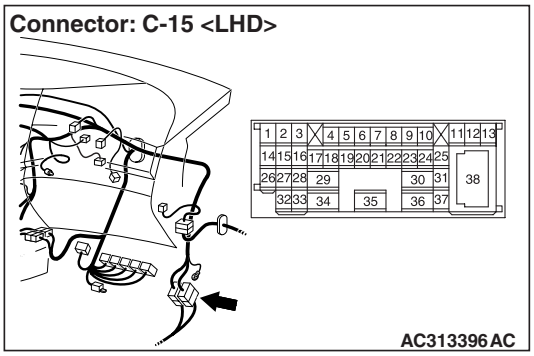

NOTE: Prior to the wiring harness inspection, check intermediate connector C-15, and repair if necessary.

- Check the rear window defogger relay line for open or short circuit.

Q: Is the check result normal?
YES : Go to Step 9.
NO : Repair the wiring harness.

STEP 9. Replace the rear power transistor and recheck the trouble symptom

Check that the rear blower motor should work normally.

Q: Is the check result normal?
YES : This diagnosis is complete.
NO : Replace the A/C-ECU.

STEP 10. Recheck the trouble symptom

Q: Is the check result normal?
YES : The trouble can be an intermittent malfunction (Refer to GROUP 00, How to Cope with Intermittent Malfunction P.00-5).
NO : Replace the A/C-ECU.

Inspection Procedure 18: The temperature of rear air conditioner cannot be controlled <Except Vehicles for Hong Kong and Singapore (Vehicles with dual automatic A/C)>

Rear Heater Controller Circuit <LHD>

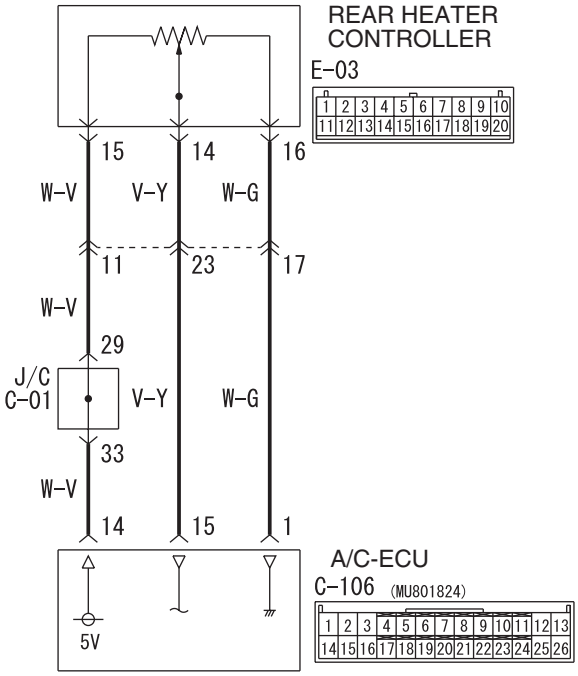

Wire colour code
B : Black LG : Light green G : Green L : Blue W : White Y : Yellow SB : Sky blue
BR : Brown O : Orange GR : Grey R : Red P : Pink V : Violet PU : Purple

W6X55X014A

Main Index
Group TOC

Rear Heater Controller Circuit <RHD>

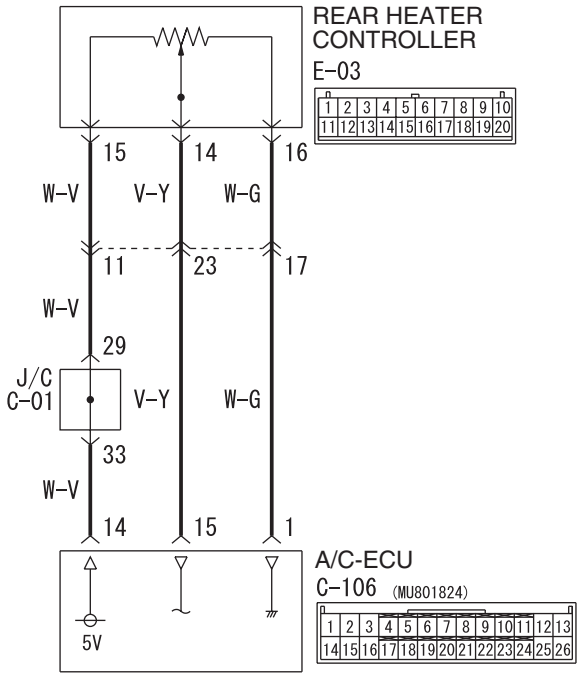

Wire colour code
B : Black LG : Light green G : Green L : Blue W : White Y : Yellow SB : Sky blue
BR : Brown O : Orange GR : Grey R : Red P : Pink V : Violet PU : Purple

W6X55X013A

COMMENTS ON TROUBLE SYMPTOM

If the temperature of rear air conditioner con not be controlled, the rear heater controller circuit system or the rear air mix damper control motor circuit system may be defective.

PROBABLE CAUSES

- Malfunction of rear air mix damper control motor
- Malfunction of rear heater controller
- Malfunction of the A/C-ECU
- Damaged harness wires and connectors

DIAGNOSIS PROCEDURE

STEP 1. M.U.T.-III diagnosis code

Check whether the air conditioner sets a diagnosis code or not.

Q: Is the check result normal?
YES : Go to Step 2.
NO : Refer to diagnosis code chart P.55-8.

STEP 2. M.U.T.-III actuator test

Carry out the actuator test. (Refer to P.55-201.)

- Item 13: R.Air mix dumper motor: 0%
- Item 14: R.Air mix dumper motor: 50%
- Item 15: R.Air mix dumper motor: 100%

Q: Does the rear blower motor work normally?
YES : Go to Step 3.
NO : Go to Step 8.

STEP 3. M.U.T.-III data list

Check that the following service data display contents are normal. (Refer to P.55-198.)

- Item 12: R.Air mix potentiometer
- Item 13: R.Air mix potentiometer (Target)
- Item 51: Rear Temperature setting

Q: Is the check result normal?
YES : Go to Step 8.
NO : Go to Step 4.

Main Index
Group TOC

STEP 4. Connector check: E-03 rear heater controller connector

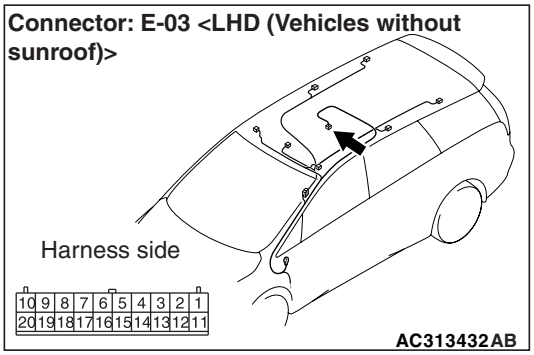

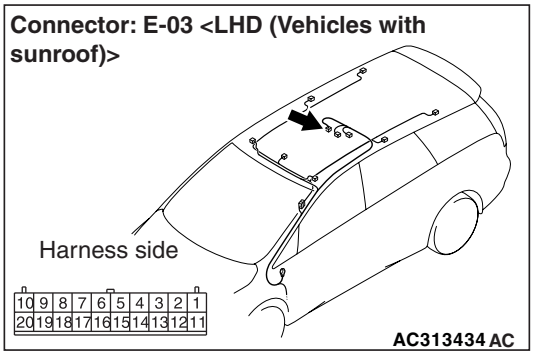

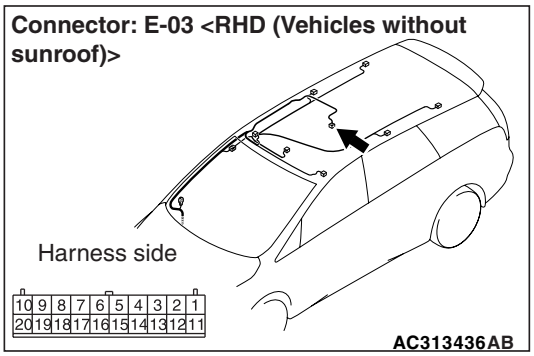

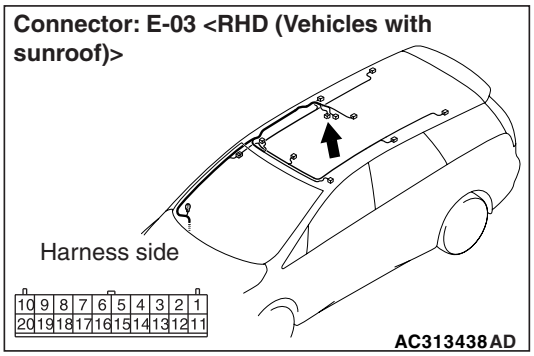

Q: Is the check result normal?
YES : Go to Step 5.
NO : Repair the connector.

STEP 5. Check the rear heater controller

Refer to P.55-229.

Q: Is the check result normal?
YES : Go to Step 6.
NO : Replace the rear heater controller.

STEP 6. Connector check: C-106 A/C-ECU

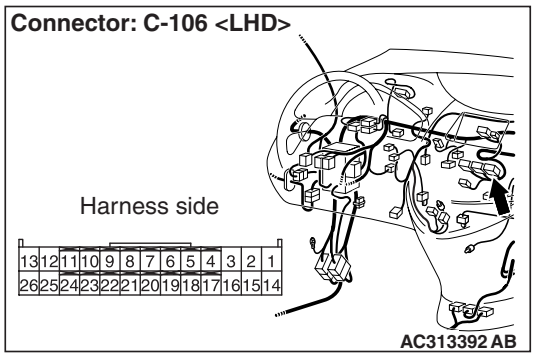

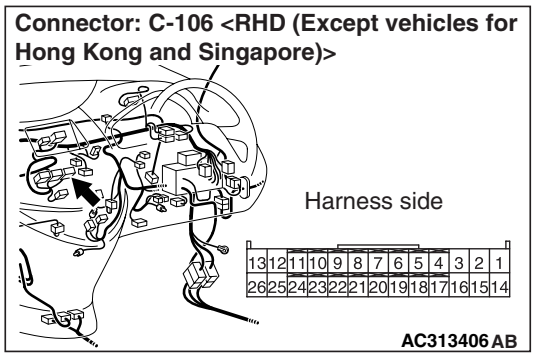

Q: Is the check result normal?
YES : Go to Step 7.
NO : Repair the connector.

Main Index
Group TOC

STEP 7. Check the wiring harness between E-03 rear heater controller connector (terminals 14, 15, and 16) and C-106 A/C-ECU connector (terminals 15, 14 and 1).

Connectors: C-01, C-106, C-128 <LHD>

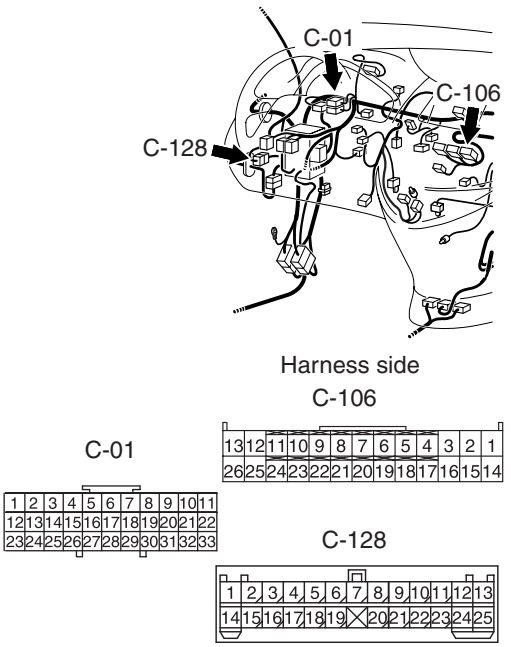

Connectors: C-01, C-106, C-128 <RHD (Except vehicles for Hong Kong and Singapore)>

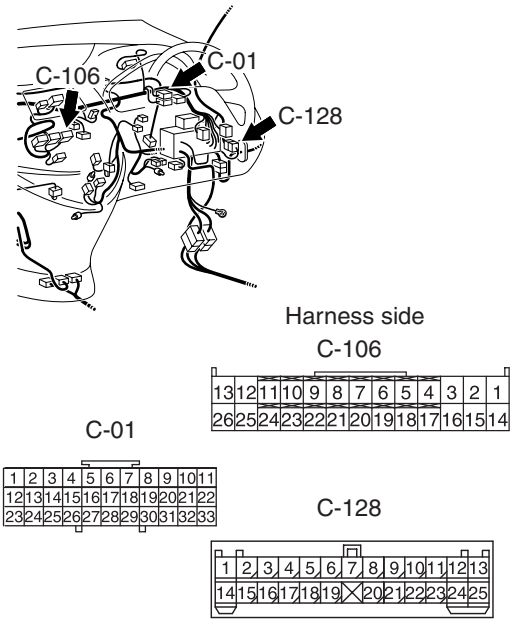

Connector: E-03 <LHD (Vehicles without sunroof)>

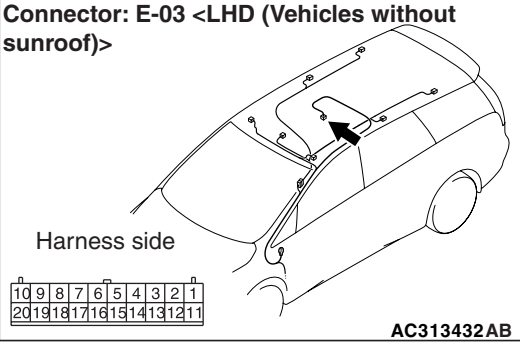

Connector: E-03 <LHD (Vehicles with sunroof)>

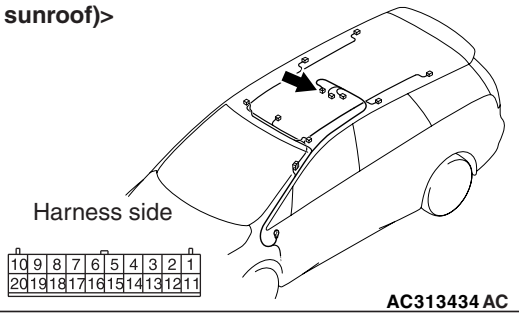

Connector: E-03 <RHD (Vehicles without sunroof)>

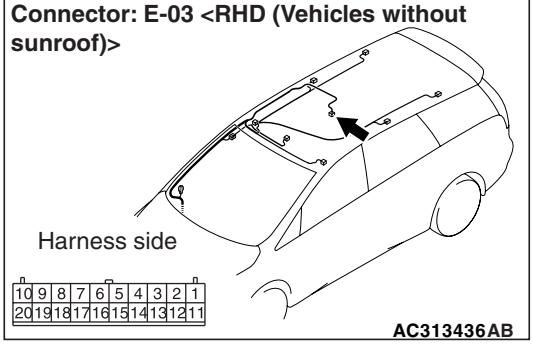

Connector: E-03 <RHD (Vehicles with sunroof)>

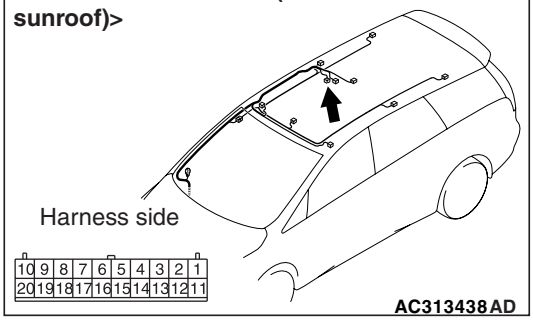

NOTE: Prior to the wiring harness inspection, check intermediate connector C-128 and joint connector C-01, and repair if necessary.

- Check the input line for open circuit.

Q: Is the check result normal?

YES : Go to Step 8.

NO : Repair the wiring harness.

Main Index
Group TOC

STEP 8. Recheck the trouble symptom

Q: Is the check result normal?
YES : The trouble can be an intermittent malfunction (Refer to GROUP 00, How to Cope with Intermittent Malfunction P.00-5).
NO : Replace the A/C-ECU.

Inspection Procedure 19: The temperature of rear air conditioner cannot be controlled <Vehicles for Hong Kong and Singapore (Vehicles with dual automatic A/C)>

Rear Heater Controller Circuit

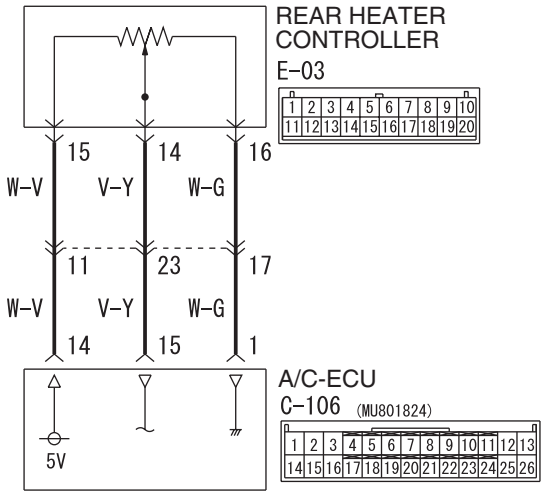

Wire colour code
B : Black LG : Light green G : Green L : Blue W : White Y : Yellow SB : Sky blue
BR : Brown O : Orange GR : Grey R : Red P : Pink V : Violet PU : Purple

W6X55X015A

COMMENTS ON TROUBLE SYMPTOM

If the temperature of rear air conditioner con not be controlled, the rear heater controller circuit system or the rear air mix damper control motor circuit system may be defective.

PROBABLE CAUSES

- Malfunction of rear air mix damper control motor
- Malfunction of rear heater controller
- Malfunction of the A/C-ECU
- Damaged harness wires and connectors

DIAGNOSIS PROCEDURE

STEP 1. M.U.T.-III diagnosis code

Check whether the air conditioner sets a diagnosis code or not.

Q: Is the check result normal?
YES : Go to Step 2.
NO : Refer to diagnosis code chart P.55-8.

STEP 2. M.U.T.-III actuator test

Carry out the actuator test. (Refer to P.55-201.)

- Item 13: R.Air mix dumper motor: 0%
- Item 14: R.Air mix dumper motor: 50%
- Item 15: R.Air mix dumper motor: 100%

Q: Does the rear blower motor work normally?
YES : Go to Step 3.
NO : Go to Step 8.

STEP 3. M.U.T.-III data list

Check that the following service data display contents are normal. (Refer to P.55-198.)

- Item 12: R.Air mix potentiometer
- Item 13: R.Air mix potentiometer (Target)
- Item 51: Rear Temperature setting

Q: Is the check result normal?
YES : Go to Step 8.
NO : Go to Step 4.

STEP 4. Connector check: E-03 rear heater controller connector

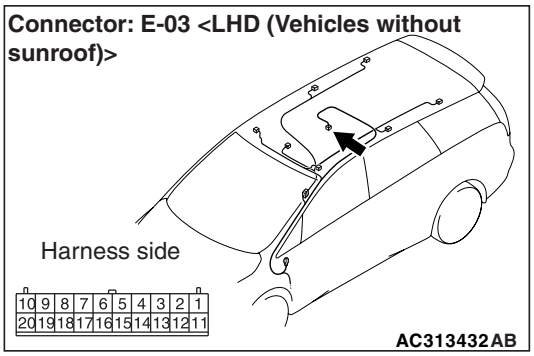

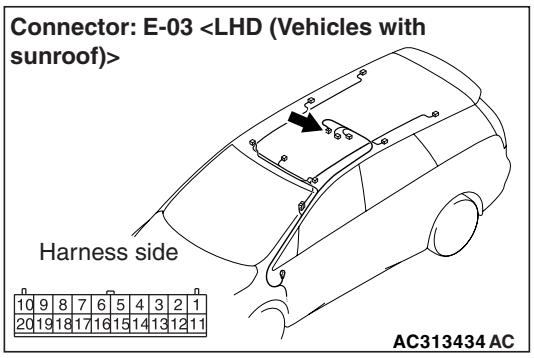

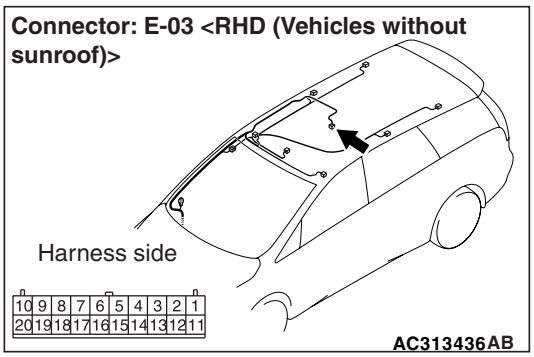

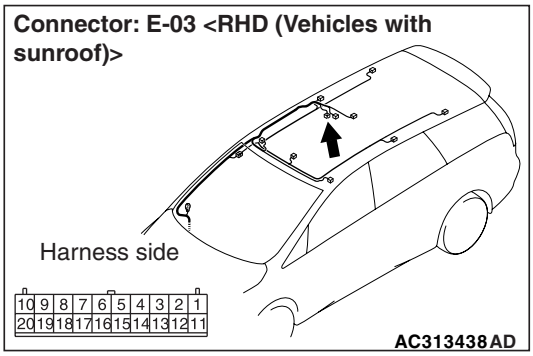

Q: Is the check result normal?
YES : Go to Step 5.
NO : Repair the connector.

STEP 5. Check the rear heater controller

Refer to P.55-229.

Q: Is the check result normal?
YES : Go to Step 6.
NO : Replace the rear heater controller.

STEP 6. Connector check: C-106 A/C-ECU

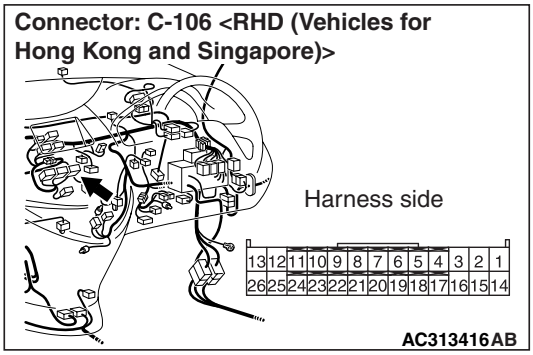

Q: Is the check result normal?
YES : Go to Step 7.
NO : Repair the connector.

Main Index
Group TOC

STEP 7. Check the wiring harness between E-03 rear heater controller connector (terminals 14, 15, and 16) and C-106 A/C-ECU connector (terminals 15, 14 and 1).

Connectors: C-106, C-128 <RHD (Vehicles for Hong Kong and Singapore)>

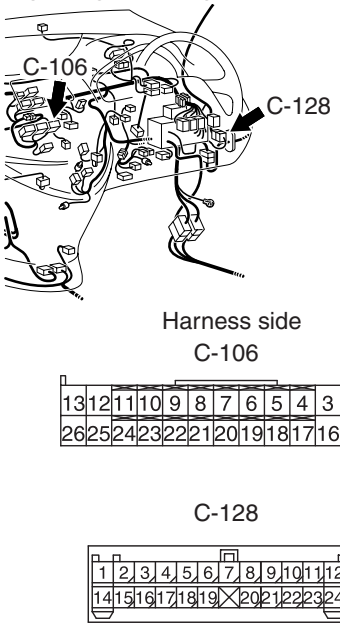

Connector: E-03 <LHD (Vehicles without sunroof)>

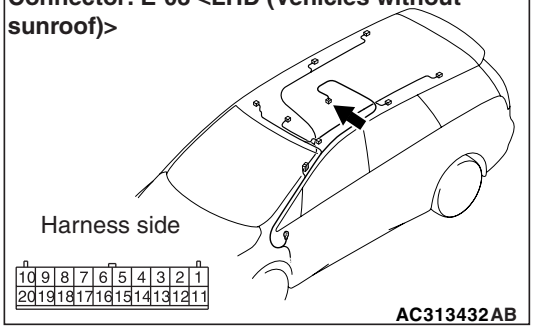

Connector: E-03 <LHD (Vehicles with sunroof)>

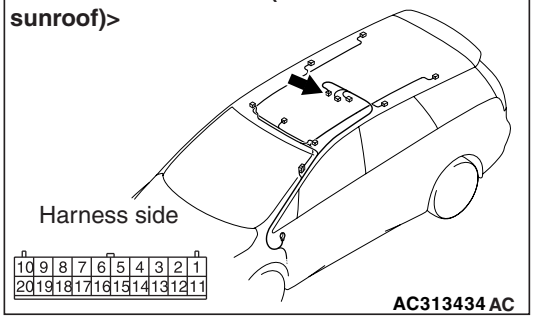

Connector: E-03 <RHD (Vehicles without sunroof)>

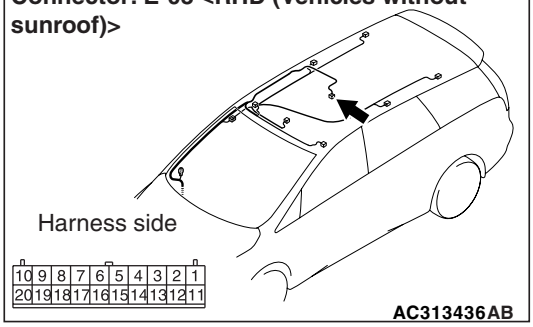

Connector: E-03 <RHD (Vehicles with sunroof)>

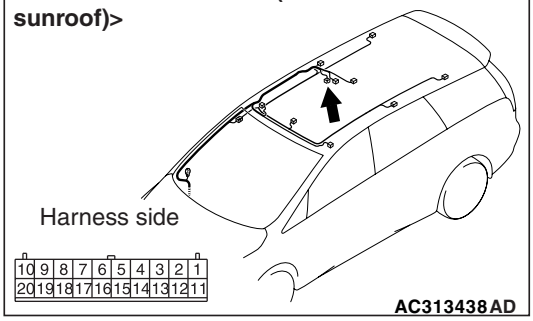

NOTE: Prior to the wiring harness inspection, check intermediate connector C-128, and repair if necessary.

- Check the input line for open circuit.

Q: Is the check result normal?
YES : Go to Step 8.
NO : Repair the wiring harness.

STEP 8. Recheck the trouble symptom

Q: Is the check result normal?
YES : The trouble can be an intermittent malfunction (Refer to GROUP 00, How to Cope with Intermittent Malfunction P.00-5).
NO : Replace the A/C-ECU.

Main Index
Group TOC

Inspection Procedure 20: A/C pressure sensor system <Except vehicles for Hong Kong and Singapore>

A/C Pressure Sensor

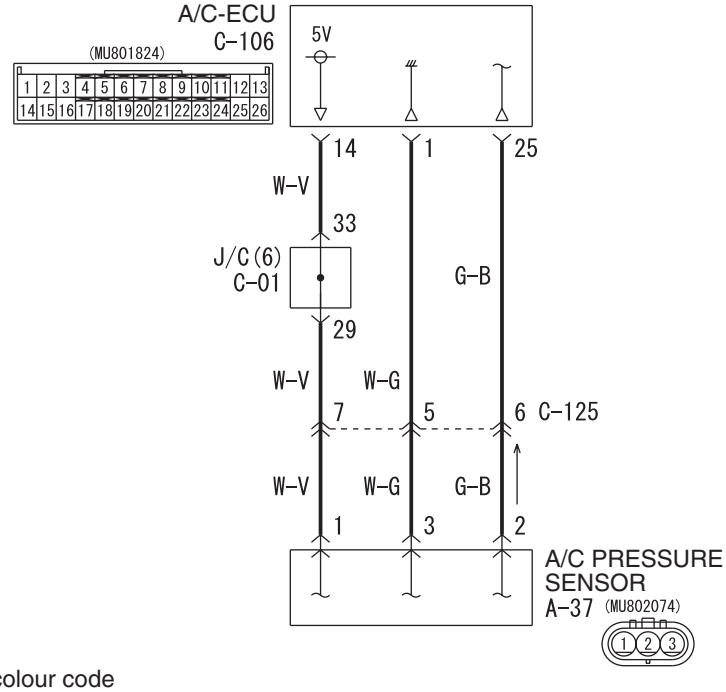

Wire colour code
B : Black LG : Light green G : Green L : Blue W : White Y : Yellow SB : Sky blue
BR : Brown O : Orange GR : Grey R : Red P : Pink V : Violet PU : Purple

W6X55X016A

COMMENTS ON TROUBLE SYMPTOM

If the A/C pressure sensor is defective, the damaged wiring harness between the A/C pressure sensor and the A/C-ECU may be suspected.

PROBABLE CAUSES

- Malfunction of A/C pressure sensor
- Malfunction of the A/C-ECU
- Damaged harness wires and connectors

DIAGNOSIS PROCEDURE

STEP 1. M.U.T.-III data list

Check that the following service data display contents are normal. (Refer to P.55-198.)

- Item 04: Pressure sensor

Q: Is the check result normal?

YES : Go to Step 6.
NO : Go to Step 2.

Main Index
Group TOC

STEP 2. Connector check: A-37 A/C pressure sensor connector

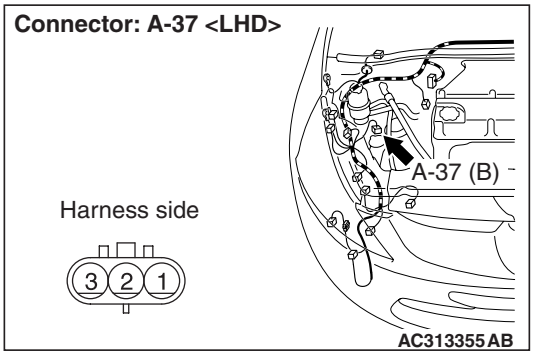

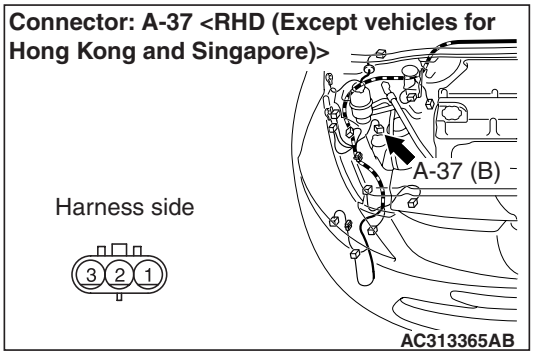

Q: Is the check result normal?
YES : Go to Step 3.
NO : Repair the connector.

STEP 3. Inspection of A/C pressure sensor

Refer to P.55-208.

Q: Is the check result normal?
YES : Go to Step 4.
NO : Replace the A/C pressure sensor.

STEP 4. Connector check: C-106 A/C-ECU connector

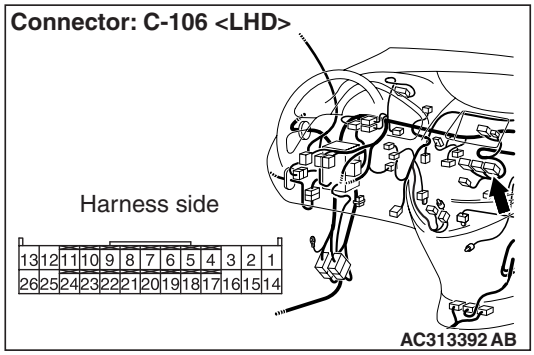

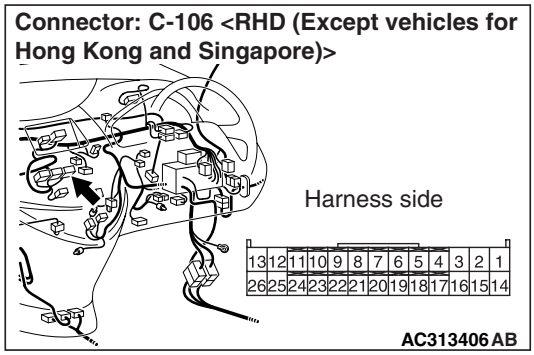

Q: Is the check result normal?
YES : Go to Step 5.
NO : Repair the connector.

Main Index
Group TOC

STEP 5. Check the wiring harness between A-37 A/C pressure sensor connector (terminals 2, 1 and 3) and C-106 A/C-ECU connector (terminals 25, 14 and 1).

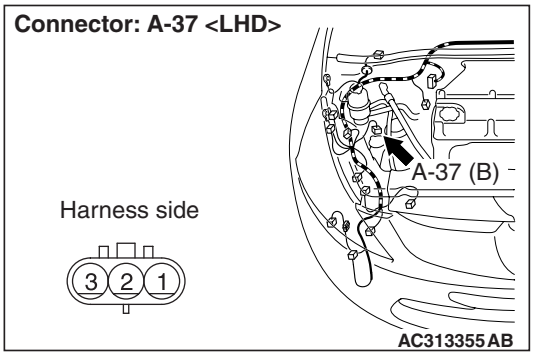

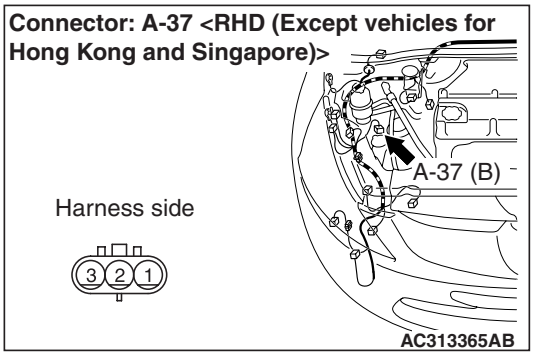

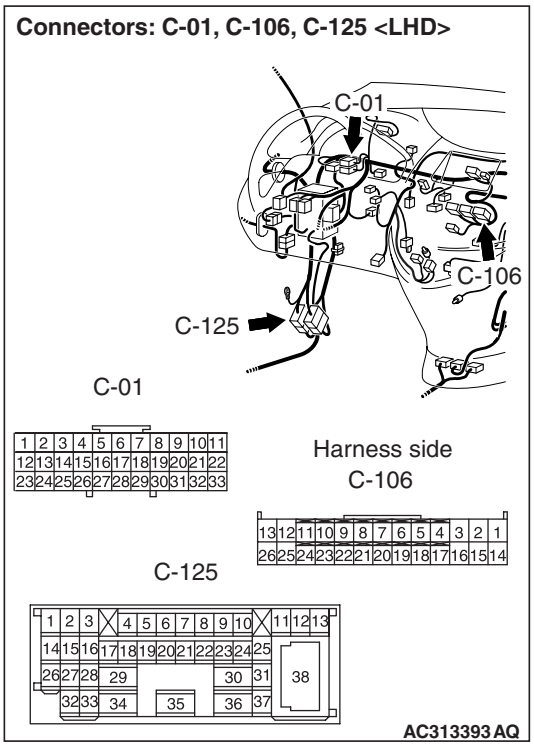

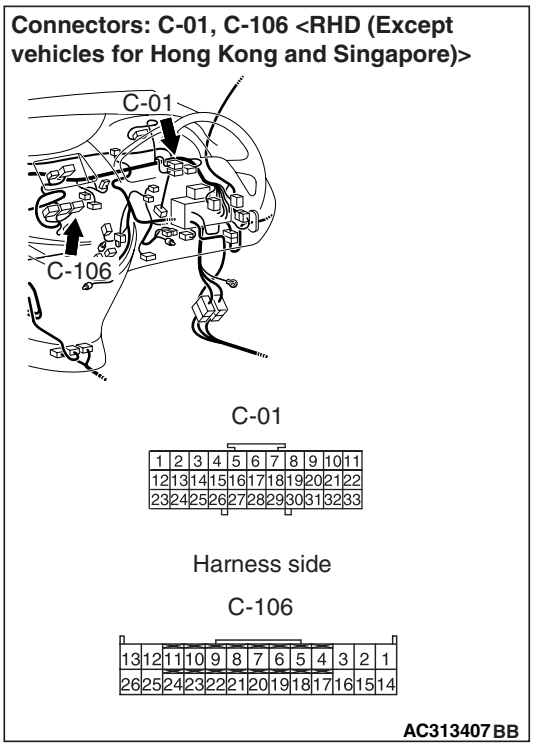

NOTE:

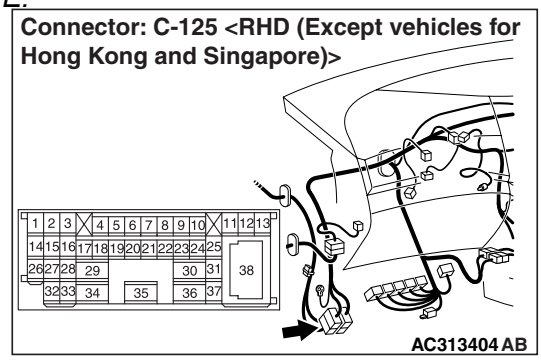

Prior to the wiring harness inspection, check intermediate connector C-125 and joint connector C-01, and repair if necessary.

- Check the input line for open circuit.

Q: Is the check result normal?
YES : Go to Step 6.
NO : Repair the wiring harness.

STEP 6. Recheck the trouble symptom

Q: Is the check result normal?
YES : The trouble can be an intermittent malfunction (Refer to GROUP 00, How to Cope with Intermittent Malfunction P.00-5).
NO : Replace the A/C-ECU.

Main Index
Group TOC

Inspection Procedure 21: A/C pressure sensor system <Vehicles for Hong Kong and Singapore>

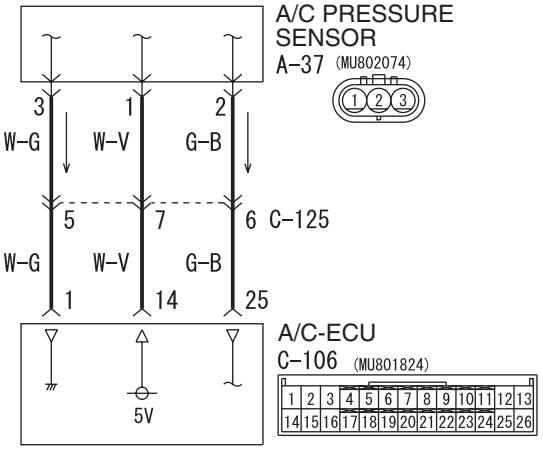

Wire colour code
B : Black LG : Light green G : Green L : Blue W : White Y : Yellow SB : Sky blue
BR : Brown O : Orange GR : Gray R : Red P : Pink V : Violet

W4X55E047A

COMMENTS ON TROUBLE SYMPTOM

If the A/C pressure sensor is defective, the damaged wiring harness between the A/C pressure sensor and the A/C-ECU may be suspected.

PROBABLE CAUSES

- Malfunction of A/C pressure sensor
- Malfunction of the A/C-ECU
- Damaged harness wires and connectors

DIAGNOSIS PROCEDURE

STEP 1. M.U.T.-III data list

Check that the following service data display contents are normal. (Refer to P.55-198.)

- Item 04: Pressure sensor

Q: Is the check result normal?
YES : Go to Step 6.
NO : Go to Step 2.

STEP 2. Connector check: A-37 A/C pressure sensor connector

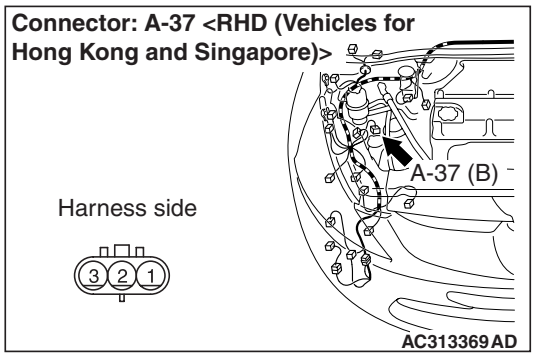

Q: Is the check result normal?
YES : Go to Step 3.
NO : Repair the connector.

STEP 3. Inspection of A/C pressure sensor

Refer to P.55-208.

Q: Is the check result normal?
YES : Go to Step 4.
NO : Replace the A/C pressure sensor.

Main Index
Group TOC

STEP 4. Connector check: C-106 A/C-ECU connector

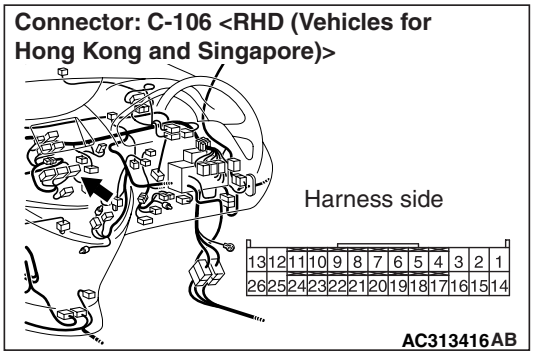

Q: Is the check result normal?
YES : Go to Step 5.
NO : Repair the connector.

STEP 5. Check the wiring harness between A-37 A/C pressure sensor connector (terminals 2, 1 and 3) and C-106 A/C-ECU connector (terminals 25, 14 and 1).

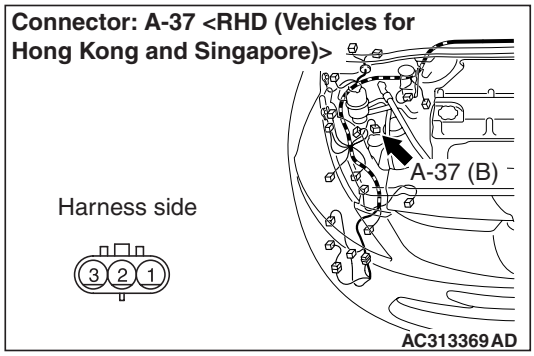

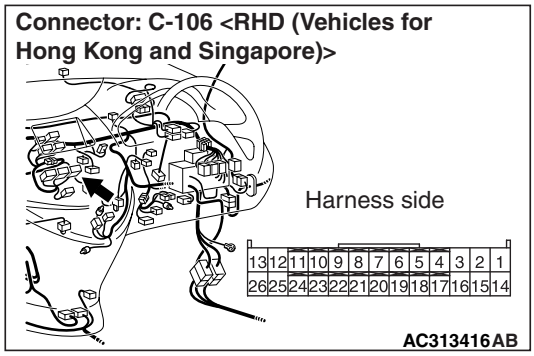

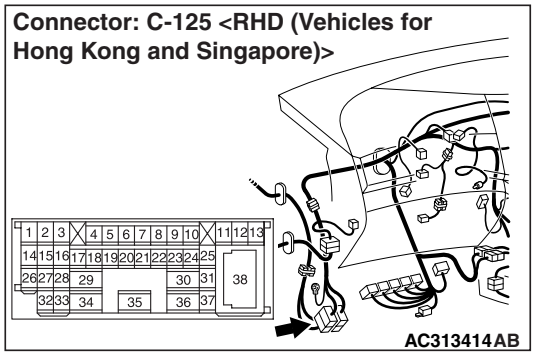

NOTE: Prior to the wiring harness inspection, check intermediate connector C-125, and repair if necessary.

- Check the input line for open circuit.

Q: Is the check result normal?
YES : Go to Step 6.
NO : Repair the wiring harness.

STEP 6. Recheck the trouble symptom

Q: Is the check result normal?
YES : The trouble can be an intermittent malfunction (Refer to GROUP 00, How to Cope with Intermittent Malfunction P.00-5).
NO : Replace the A/C-ECU.

Main Index
Group TOC

Inspection Procedure 22: Rear fan switch system <Except vehicles for Hong Kong and Singapore>

Rear Fan Switch Circuit

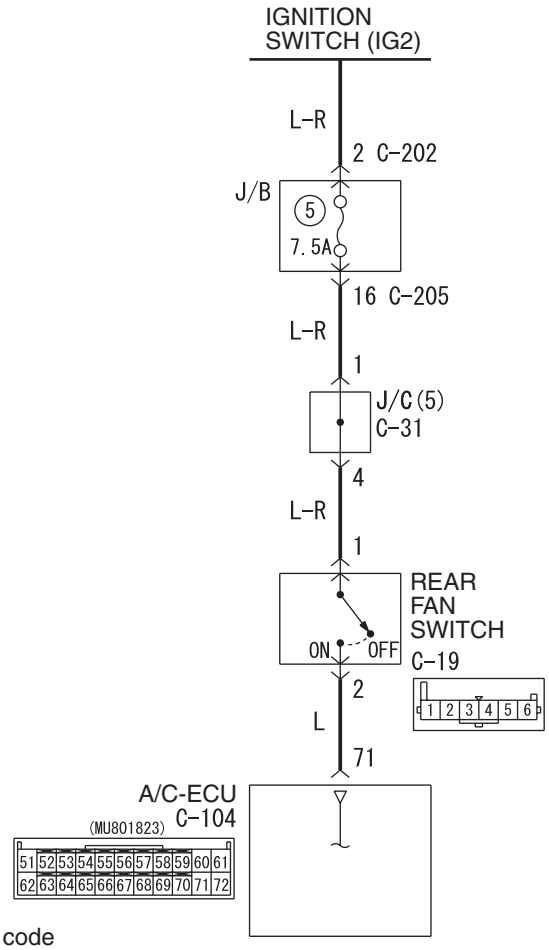

Wire colour code
B : Black LG : Light green G : Green L : Blue W : White Y : Yellow SB : Sky blue
BR : Brown O : Orange GR : Gray R : Red P : Pink V : Violet

W4X55E036A

COMMENTS ON TROUBLE SYMPTOM

If a rear fan switch signal is not set to the A/C-ECU, the rear fan switch or the rear fan switch circuit system may be defective.

PROBABLE CAUSES

- Malfunction of the rear fan switch
- Malfunction of the A/C-ECU
- Damaged harness wires and connectors

Main Index
Group TOC

DIAGNOSIS PROCEDURE

STEP 1. Connector check: C-19 rear fan switch

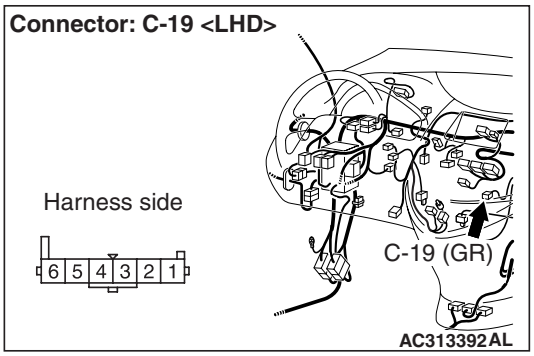

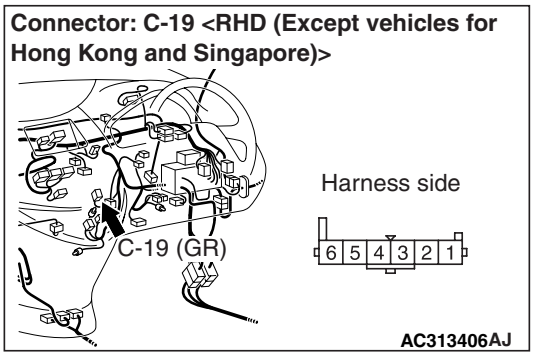

Q: Is the check result normal?
YES : Go to Step 2.
NO : Repair the connector.

STEP 2. Check the rear fan switch

Refer to P.55-220.

Q: Is the check result normal?
YES : Go to Step 3.
NO : Replace the rear fan switch.

STEP 3. Voltage measurement at C-19 rear fan switch connector.

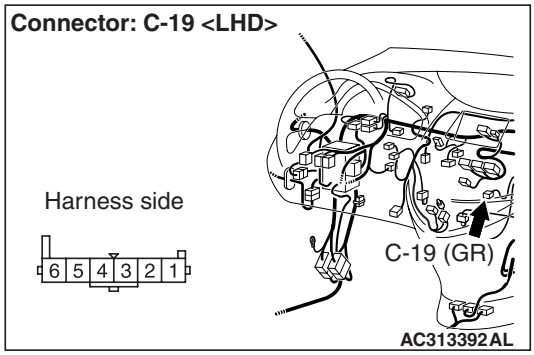

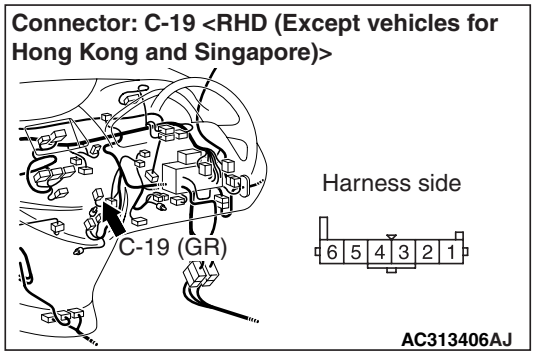

(1) Disconnect the connector, and measure at the wiring harness side.
(2) Turn the ignition switch to the ON position.

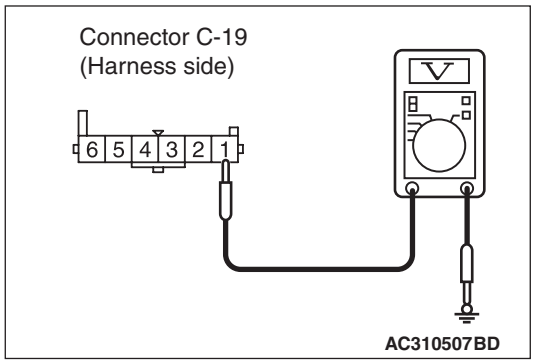

(3) Measure the voltage between terminal 1 and body earth.

OK: System voltage

Q: Is the check result normal?
YES : Go to Step 5.
NO : Go to Step 4.

Main Index
Group TOC

STEP 4. Check the wiring harness between C-19 rear fan switch connector terminal No.1 and the ignition switch (IG2).

Connectors: C-19, C-31 <LHD>

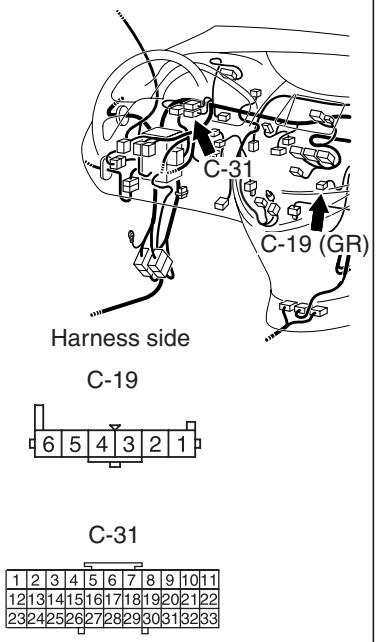

AC313393AR

Connectors: C-19, C-31 <RHD (Except vehicles for Hong Kong and Singapore)>

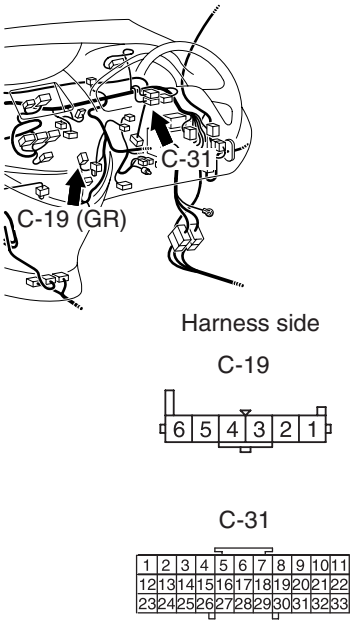

AC313407BK

NOTE:

Connectors: C-202, C-205 <LHD>
Junction block (Front view)

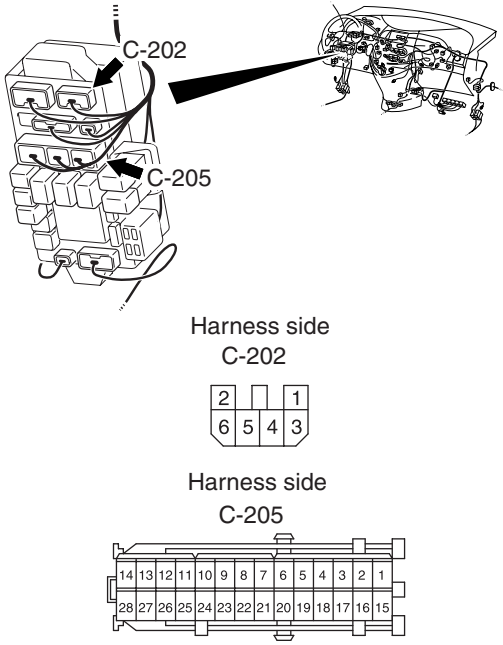

AC313399AE

Connectors: C-202, C-205 <RHD (Except vehicles for Hong Kong and Singapore>

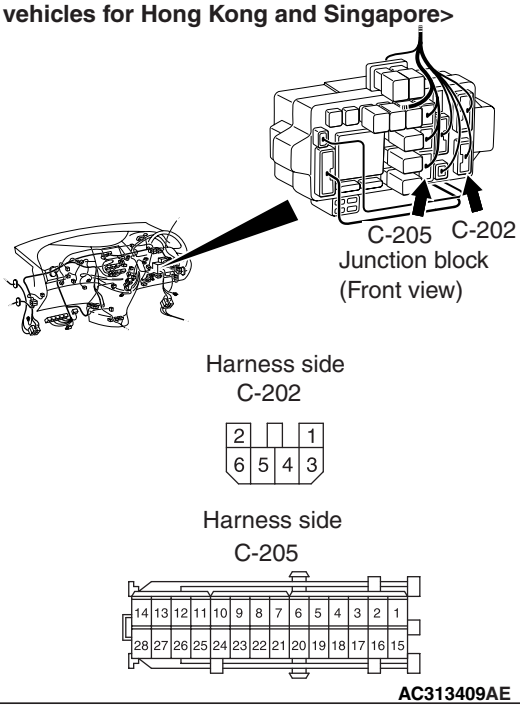

AC313409AE

Prior to the wiring harness inspection, check joint connector C-31 and junction block connector C-205 and C-202, and repair if necessary.

- Check the rear fan switch power supply line for open circuit.

Q: Is the check result normal?

YES : The trouble can be an intermittent malfunction (Refer to GROUP 00, How to Cope with Intermittent Malfunction P.00-5).

NO : Repair the wiring harness.

Main Index
Group TOC

STEP 5. Connector check: C-104 A/C-ECU connector.

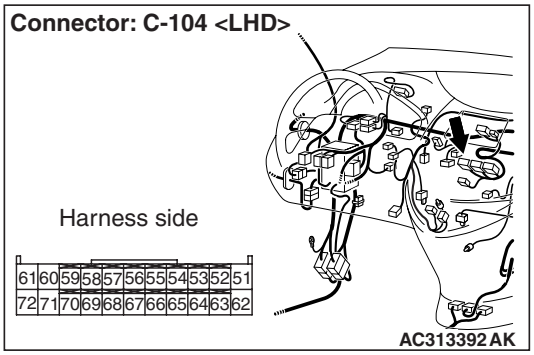

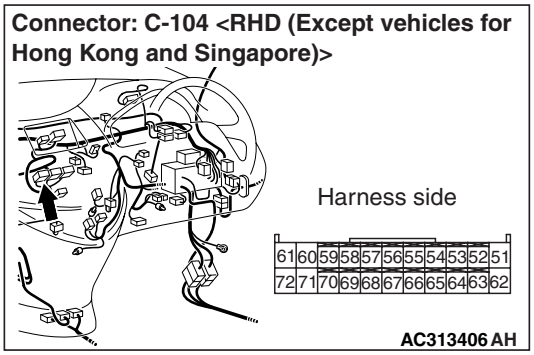

Q: Is the check result normal?
YES : Go to Step 6.
NO : Repair the connector.

STEP 6. Check the wiring harness between C-19 rear fan switch connector terminal No.2 and C-104 A/C-ECU connector terminal No.71.

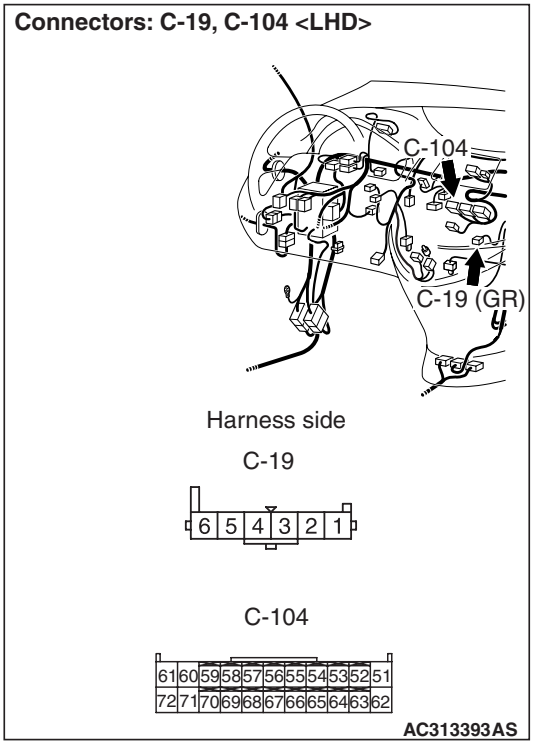

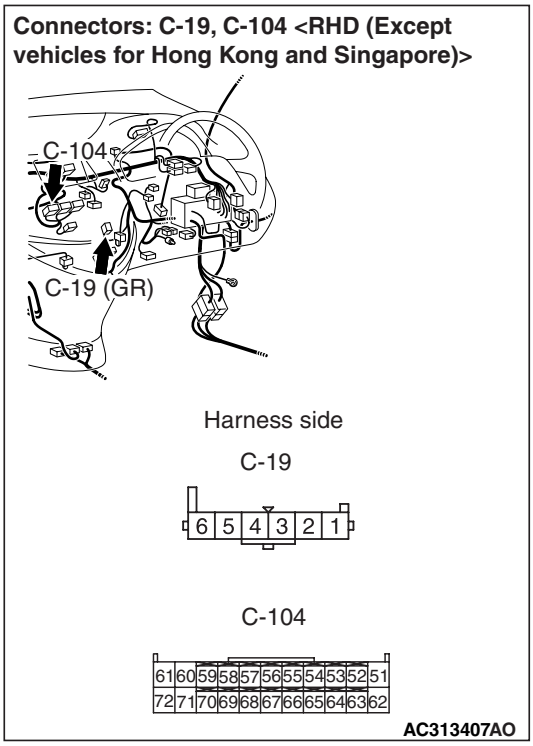

- Check the rear fan switch activating lines for open or short circuit.

Q: Is the check result normal?
YES : Go to Step 7.
NO : Repair the wiring harness.

Main Index
Group TOC

STEP 7. Recheck the trouble symptom

Q: Is the check result normal?

YES : The trouble can be an intermittent malfunction (Refer to GROUP 00, How to Cope with Intermittent Malfunction P.00-5).

NO : Replace the A/C-ECU.

Inspection Procedure 23: Rear fan switch system <Vehicles for Hong Kong and Singapore>

Rear Fan Switch Circuit

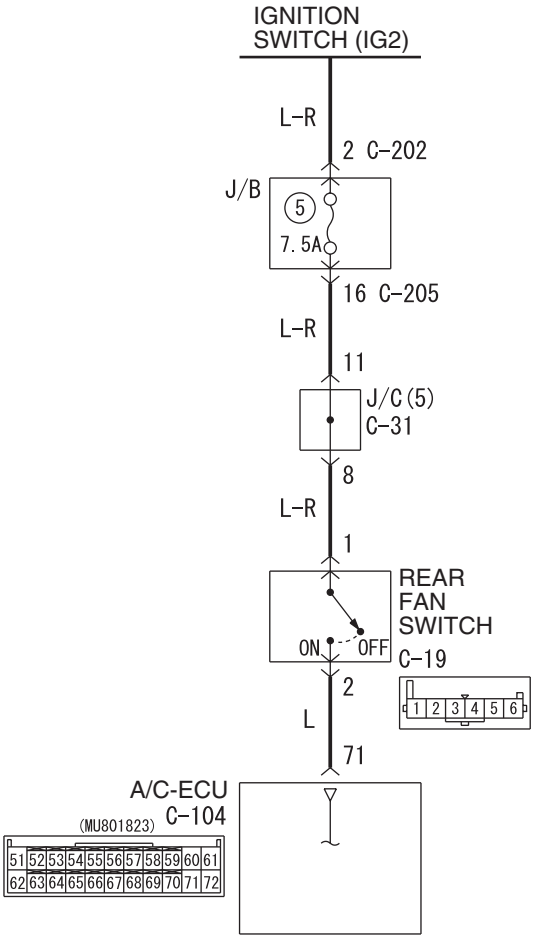

Wire colour code
B : Black LG : Light green G : Green L : Blue W : White Y : Yellow SB : Sky blue
BR : Brown O : Orange GR : Grey R : Red P : Pink V : Violet PU : Purple

W6X55X017A

COMMENTS ON TROUBLE SYMPTOM

If a rear fan switch signal is not set to the A/C-ECU, the rear fan switch or the rear fan switch circuit system may be defective.

PROBABLE CAUSES

- Malfunction of the rear fan switch
- Malfunction of the A/C-ECU
- Damaged harness wires and connectors

Main Index
Group TOC

DIAGNOSIS PROCEDURE

STEP 1. Connector check: C-19 rear fan switch

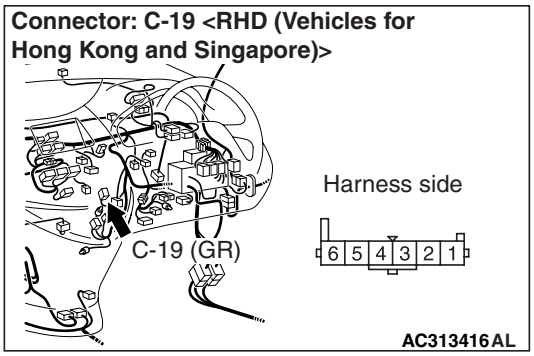

Q: Is the check result normal?
YES : Go to Step 2.
NO : Repair the connector.

STEP 2. Check the rear fan switch

Refer to P.55-220.

Q: Is the check result normal?
YES : Go to Step 3.
NO : Replace the rear fan switch.

STEP 3. Voltage measurement at C-19 rear fan switch connector.

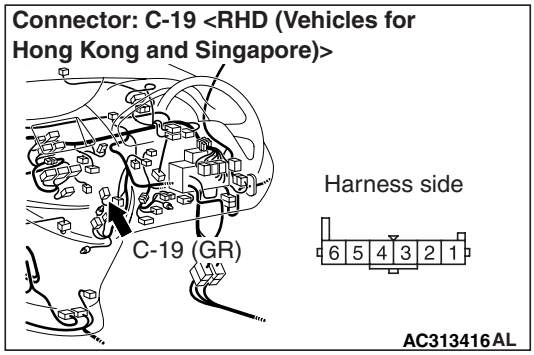

(1) Disconnect the connector, and measure at the wiring harness side.
(2) Turn the ignition switch to the ON position.

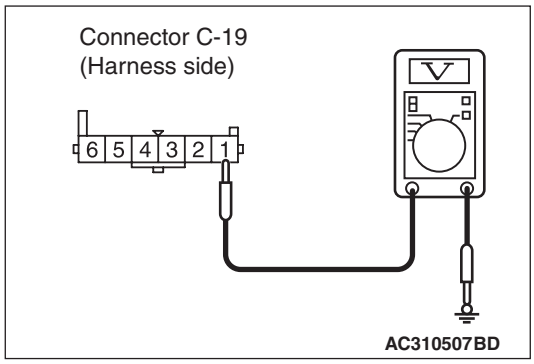

(3) Measure the voltage between terminal 1 and body earth.

OK: System voltage

Q: Is the check result normal?
YES : Go to Step 5.
NO : Go to Step 4.

Main Index
Group TOC

STEP 4. Check the wiring harness between C-19 rear fan switch connector terminal No.1 and the ignition switch (IG2).

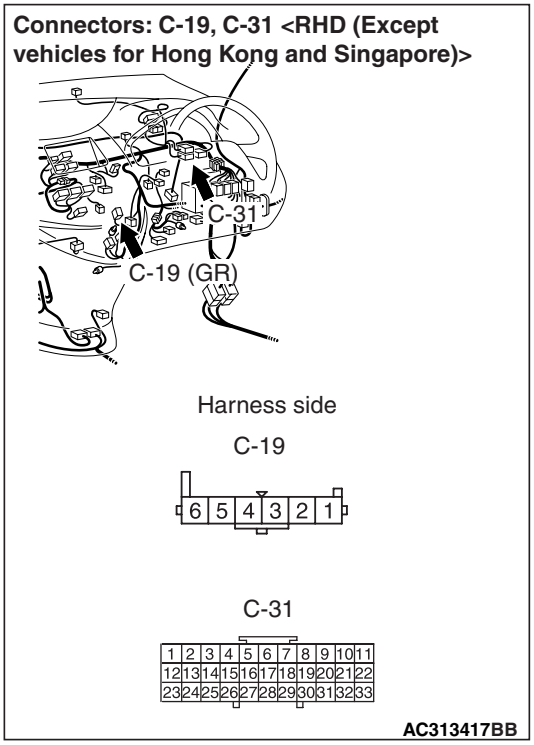

NOTE:

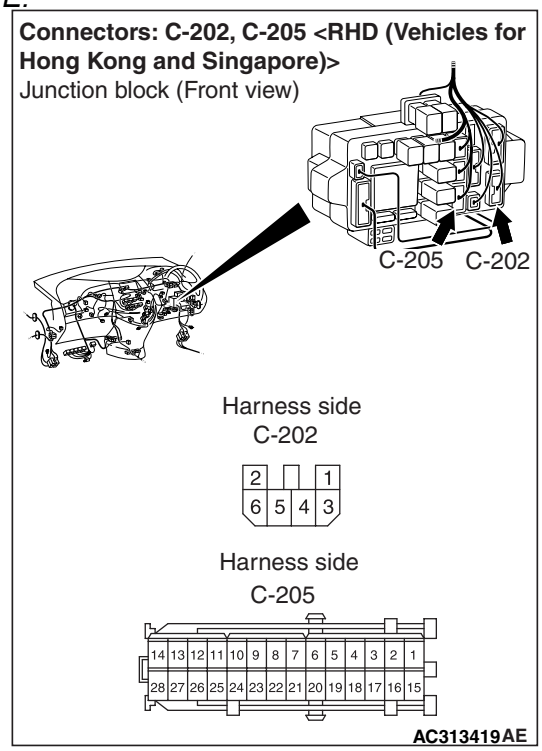

Prior to the wiring harness inspection, check joint connector C-31 and junction block connector C-205 and C-202, and repair if necessary.

- Check the rear fan switch power supply line for open circuit.

Q: Is the check result normal?
YES : The trouble can be an intermittent malfunction (Refer to GROUP 00, How to Cope with Intermittent Malfunction P.00-5).
NO : Repair the wiring harness.

STEP 5. Connector check: C-104 A/C-ECU connector

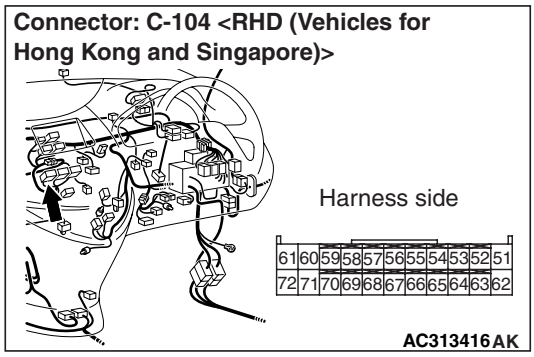

Q: Is the check result normal?
YES : Go to Step 6.
NO : Repair the connector.

STEP 6. Check the wiring harness between C-19 rear fan switch connector terminal No.2 and C-104 A/C-ECU connector terminal No.71.

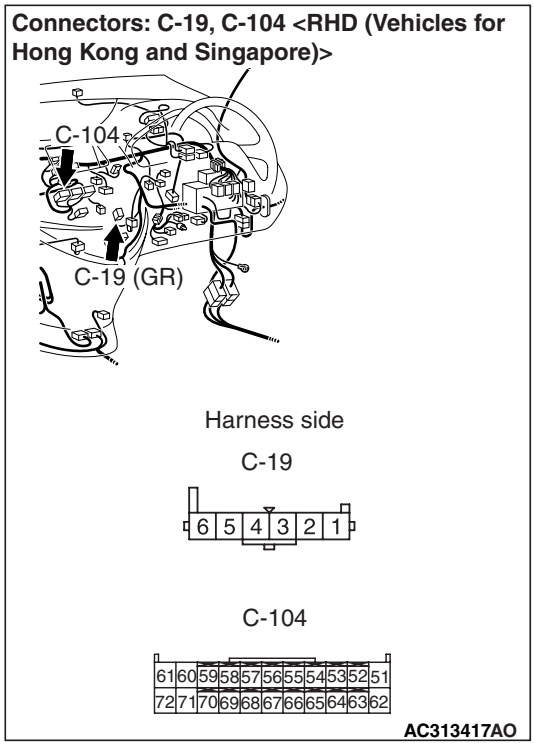

- Check the rear fan switch activating lines for open or short circuit.

Q: Is the check result normal?
YES : Go to Step 7.
NO : Repair the wiring harness.

Main Index
Group TOC

STEP 7. Recheck the trouble symptom

Q: Is the check result normal?

YES : The trouble can be an intermittent malfunction (Refer to GROUP 00, How to Cope with Intermittent Malfunction P.00-5).

NO : Replace the A/C-ECU.

Main Index
Group TOC

Inspection Procedure 24: Rear blower motor power supply system <Except vehicles for Hong Kong and Singapore>

Rear Blower Motor Circuit

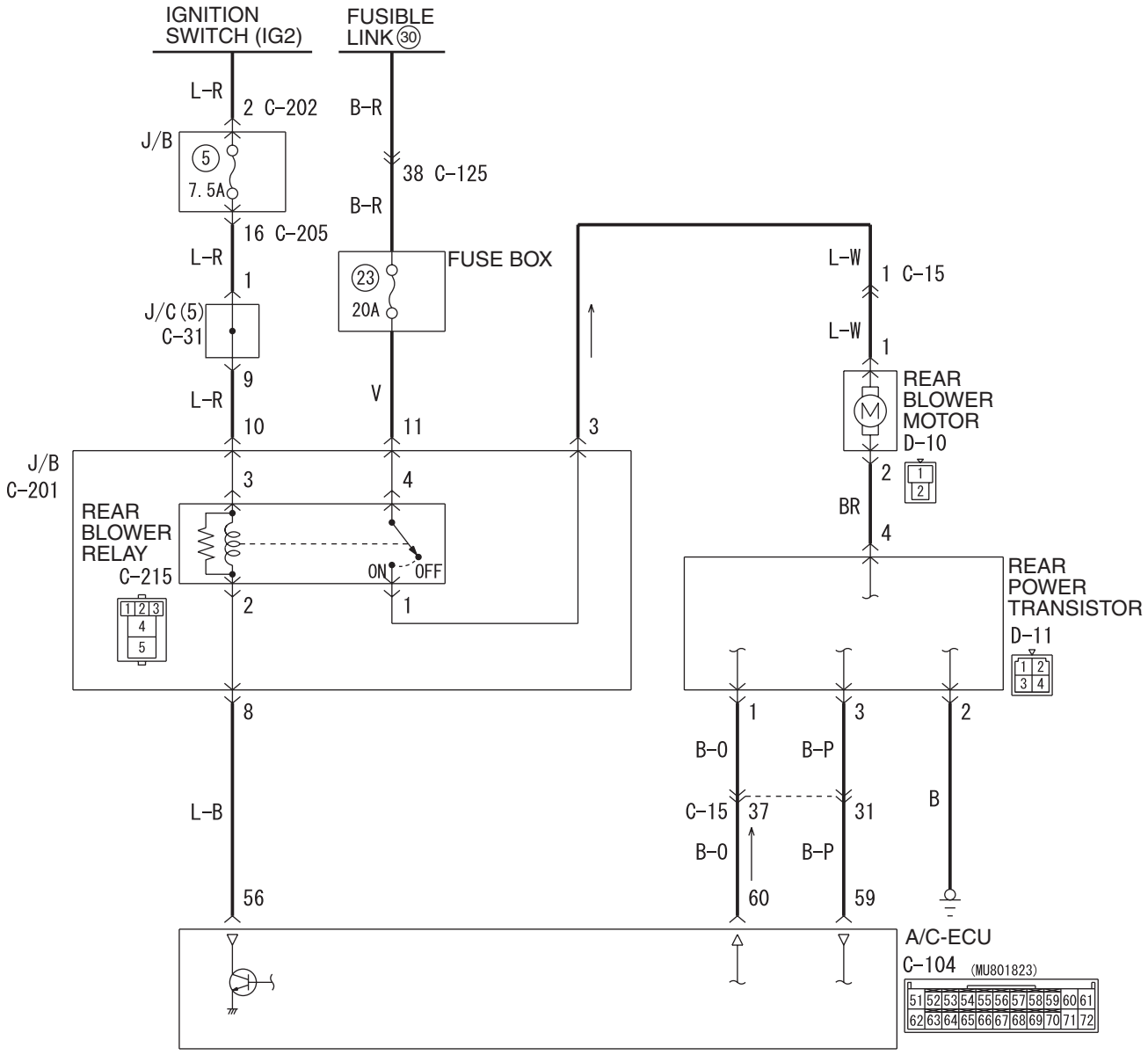

Wire colour code
B : Black LG : Light green G : Green L : Blue W : White Y : Yellow SB : Sky blue
BR : Brown O : Orange GR : Gray R : Red P : Pink V : Violet

W4X55E30AA

CIRCUIT OPERATION

If the rear blower motor does not operate, the rear blower motor circuit system may be defective.

PROBABLE CAUSES

- Malfunction of rear blower relay
- Malfunction of rear blower motor
- Malfunction of rear power transistor
- Malfunction of the A/C-ECU
- Damaged harness wires and connectors

Main Index
Group TOC

DIAGNOSIS PROCEDURE

STEP 1. Connector check: C-215 rear blower motor connector

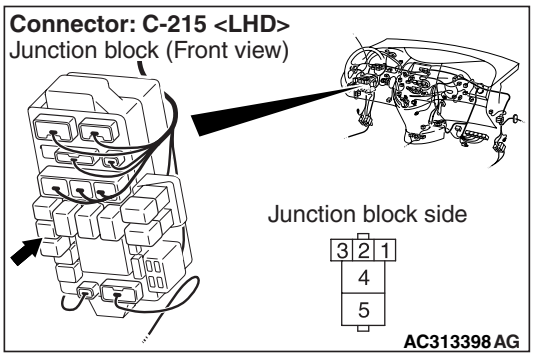

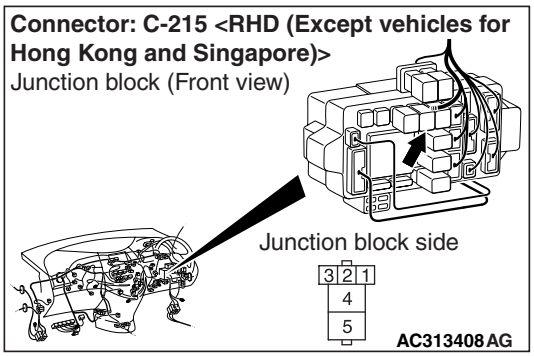

Q: Is the check result normal?
YES : Go to Step 2.
NO : Repair the connector.

STEP 2. Check the rear blower relay

Refer to P.55-208.

Q: Is the check result normal?
YES : Go to Step 3.
NO : Replace the rear blower relay.

STEP 3. Connector check: C-15 intermediate connector

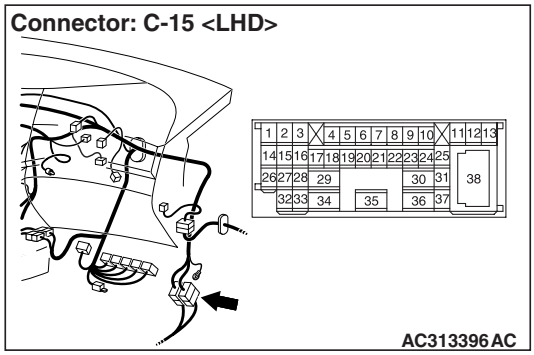

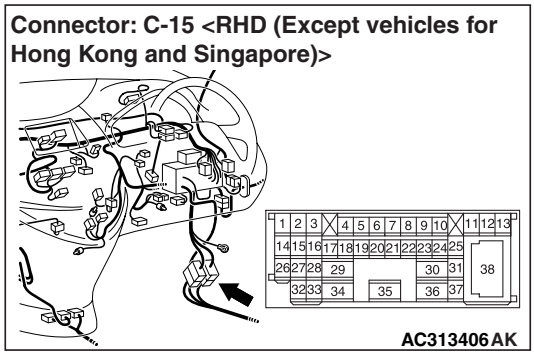

Q: Is the check result normal?
YES : Go to Step 4.
NO : Repair the connector.

STEP 4. Voltage measurement at C-15 intermediate connector.

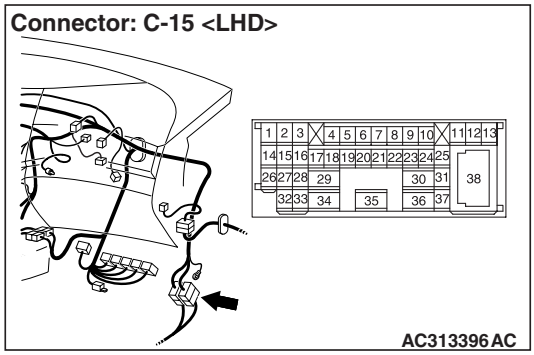

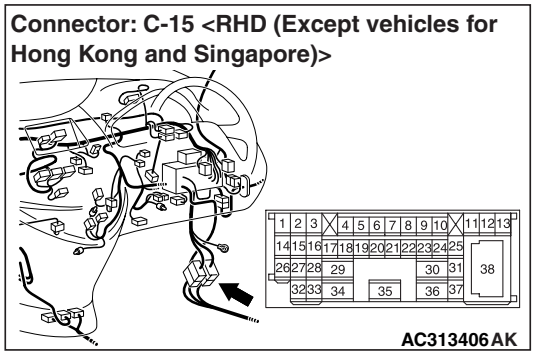

(1) Disconnect the connector, and measure at the wiring harness side.

Main Index
Group TOC

(2) Turn the ignition switch to the ON position.

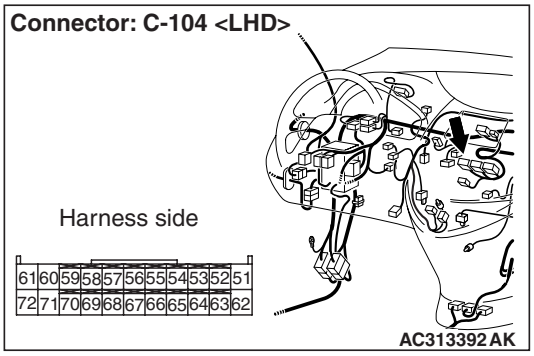

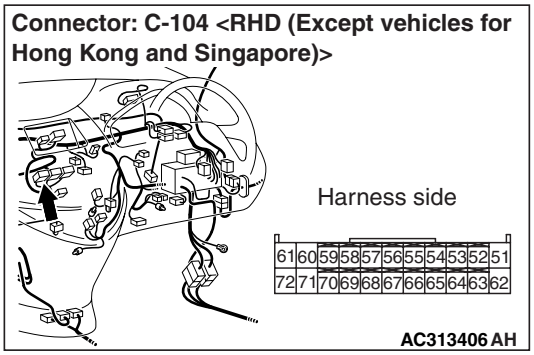

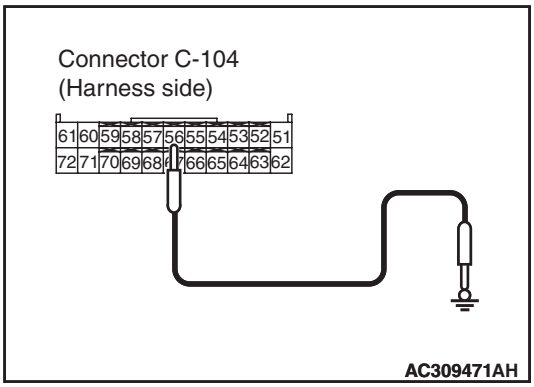

(3) Disconnect A/C-ECU connector C-104 and earth terminal 56.

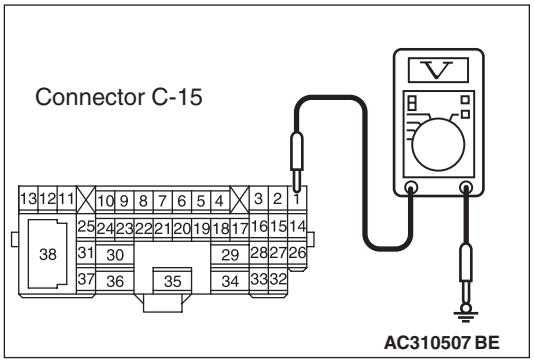

(4) Measure the voltage between terminal 1 and body earth.

OK: System voltage

Q: Is the check result normal?
YES : Go to Step 11.
NO : Go to Step 5.

STEP 5. Voltage measurement at C-215 rear blower relay connector.

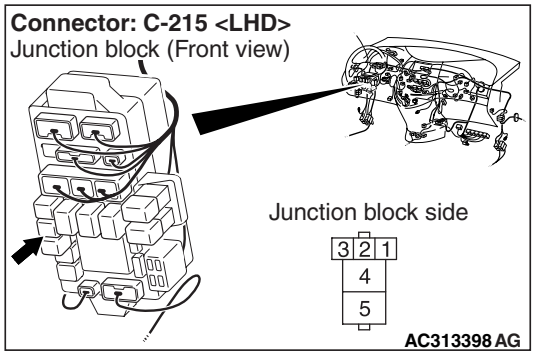

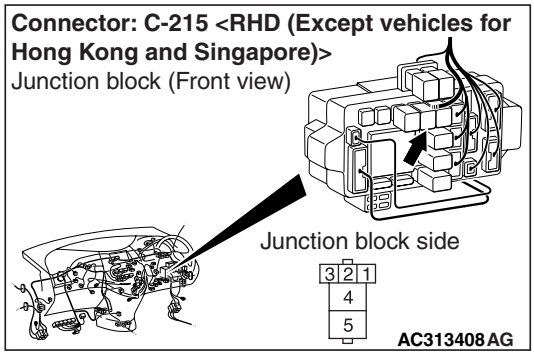

(1) Remove the relay, and measure at the relay block side.
(2) Turn the ignition switch to the "ON" position.

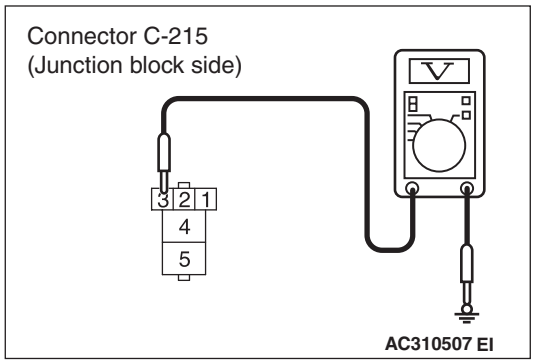

(3) Voltage between terminal 3 and body earth.

OK: System voltage

Q: Is the check result normal?
YES : Go to Step 7.
NO : Go to Step 6.

Main Index
Group TOC

STEP 6. Check the wiring harness between C-215 rear blower relay connector terminal No.3 and the ignition switch (IG2).

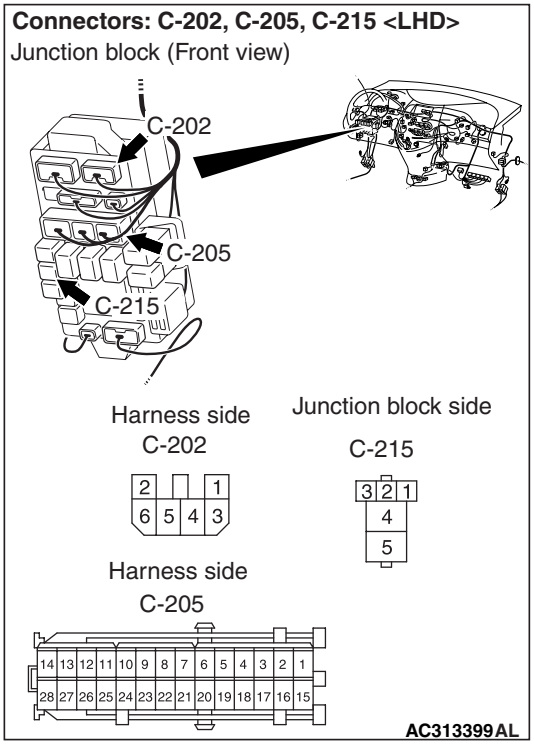

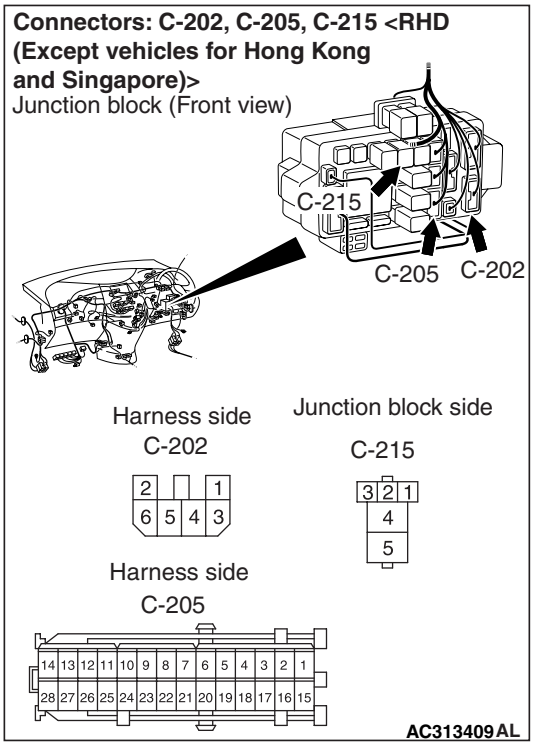

NOTE:

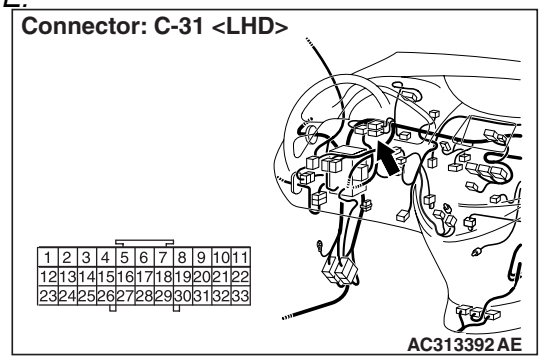

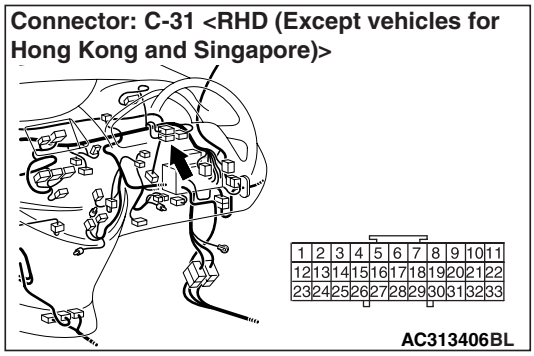

Prior to the wiring harness inspection, check junction block connectors C-202, C-205 and joint connector C-31, and repair if necessary.

- Check the rear blower relay power supply line for open circuit.

Q: Is the check result normal?

YES : The trouble can be an intermittent malfunction (Refer to GROUP 00, How to Cope with Intermittent Malfunction P.00-5).

NO : Repair the wiring harness.

Main Index
Group TOC

STEP 7. Voltage measurement at C-215 rear blower relay connector.

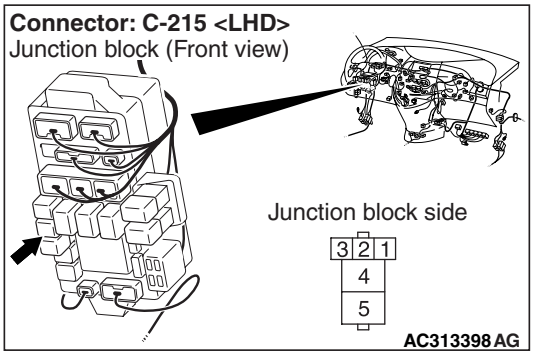

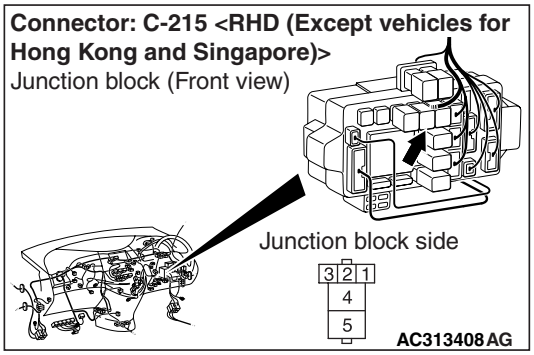

(1) Remove the relay, and measure at the relay block side.
(2) Turn the ignition switch to the "ON" position.

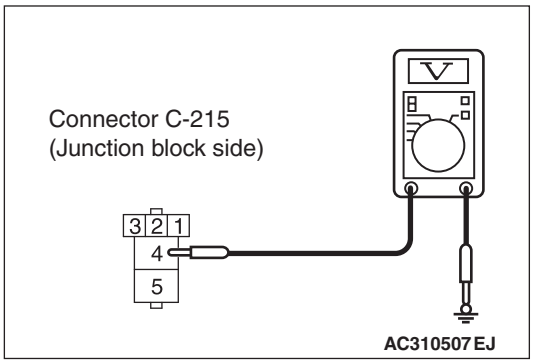

(3) Voltage between terminal 4 and body earth.

OK: System voltage

Q: Is the check result normal?
YES : Go to Step 9.
NO : Go to Step 8.

STEP 8. Check the wiring harness between C-215 rear blower relay connector terminal No.4 and the fusible link (30).

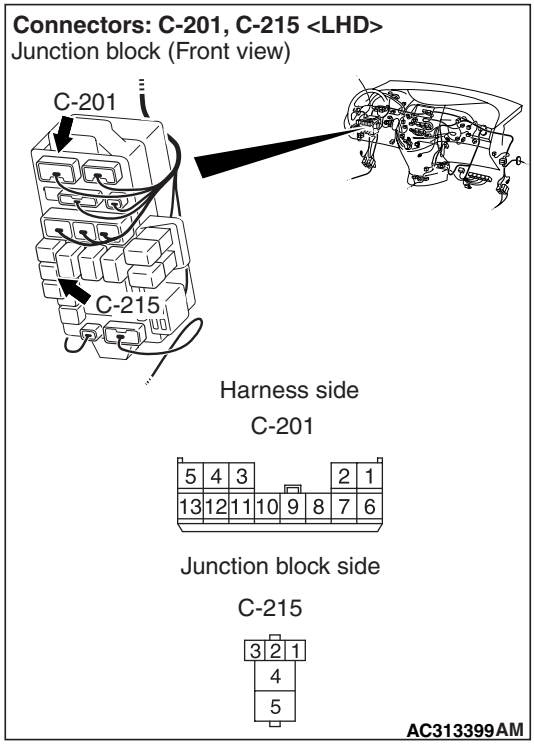

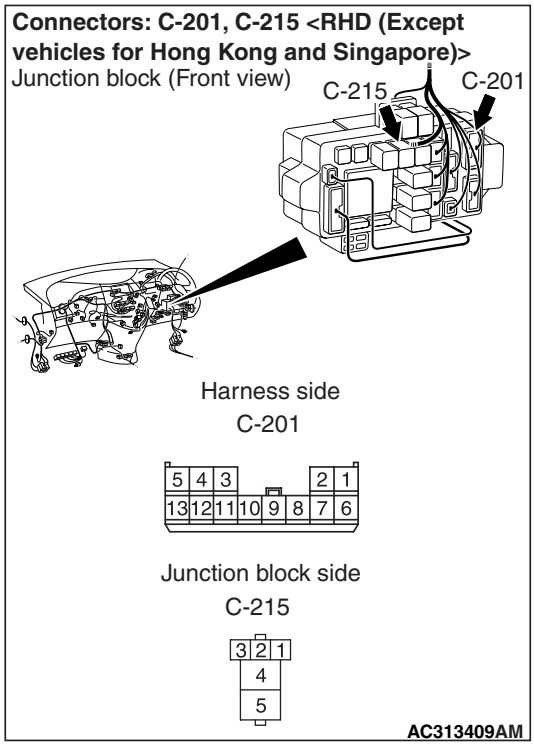

Main Index
Group TOC

NOTE:

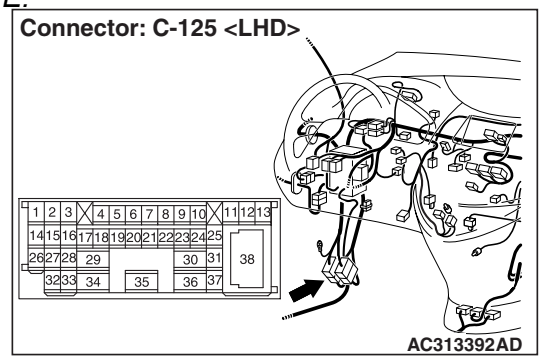

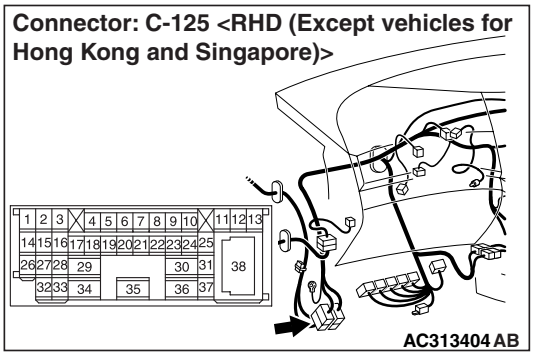

Prior to the wiring harness inspection, check intermediate connector C-125 and junction block connector C-201, and repair if necessary.

- Check the rear blower relay power supply line for open circuit.

Q: Is the check result normal?

YES : The trouble can be an intermittent malfunction (Refer to GROUP 00, How to Cope with Intermittent Malfunction P.00-5).

NO : Repair the wiring harness.

STEP 9. Check the wiring harness between C-215 rear blower relay connector terminal No.2 and C-104 A/C-ECU connector terminal No.56.

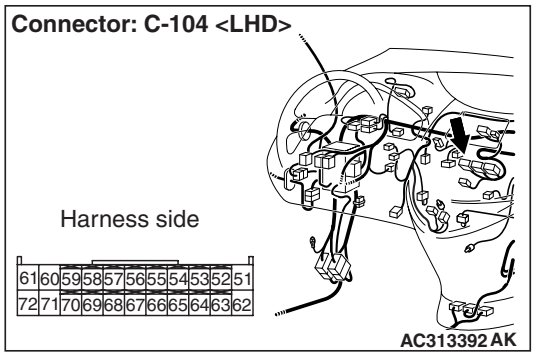

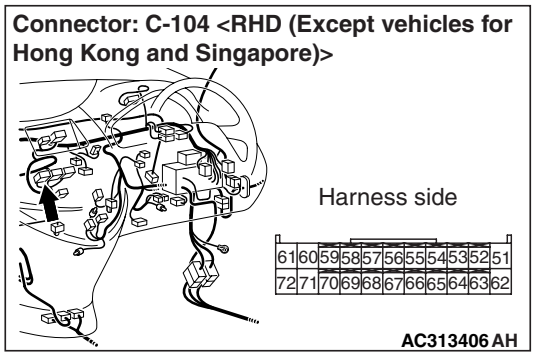

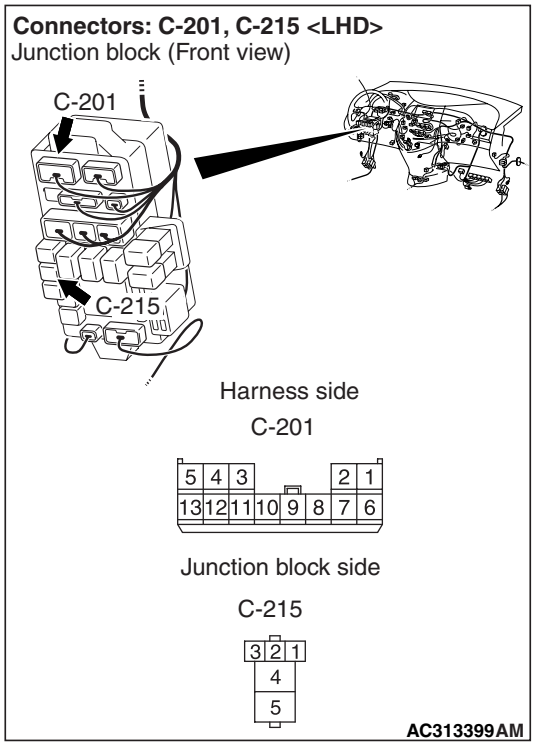

Main Index
Group TOC

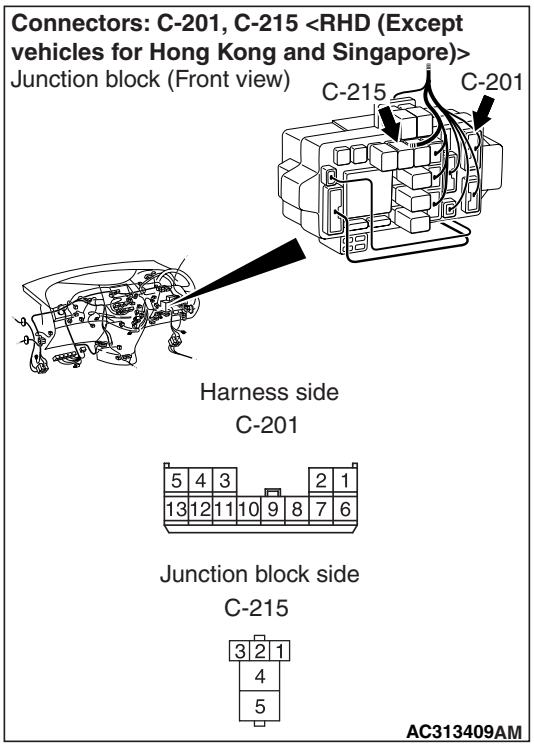

NOTE: Prior to the wiring harness inspection, check junction block connector C-201, and repair if necessary.

- Check the rear blower relay power supply line for open circuit.

Q: Is the check result normal?

YES : Go to Step 10.

NO : Repair the wiring harness.

STEP 10. Check the wiring harness between C-215 rear blower relay connector terminal No.4 and C-15 intermediate connector terminal No.1.

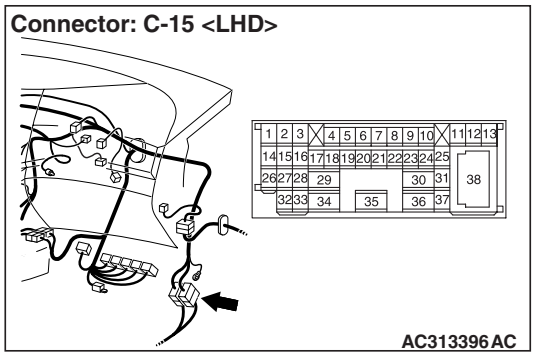

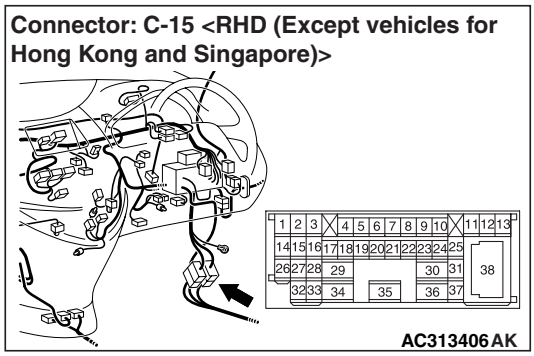

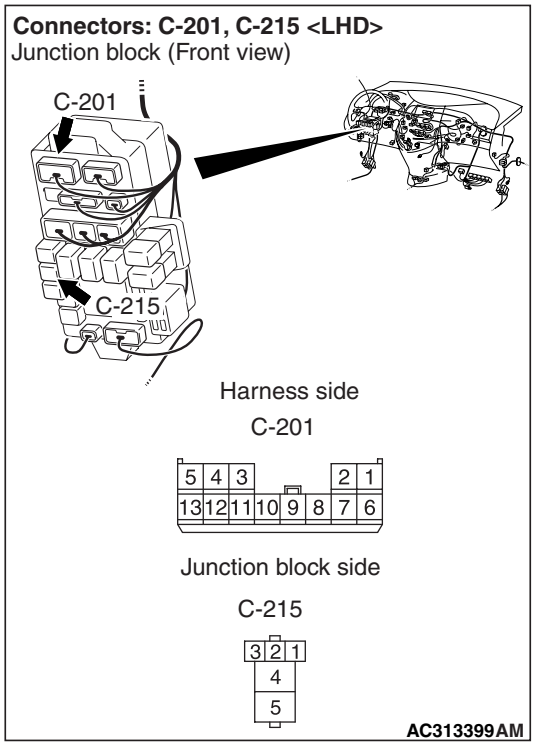

Main Index
Group TOC

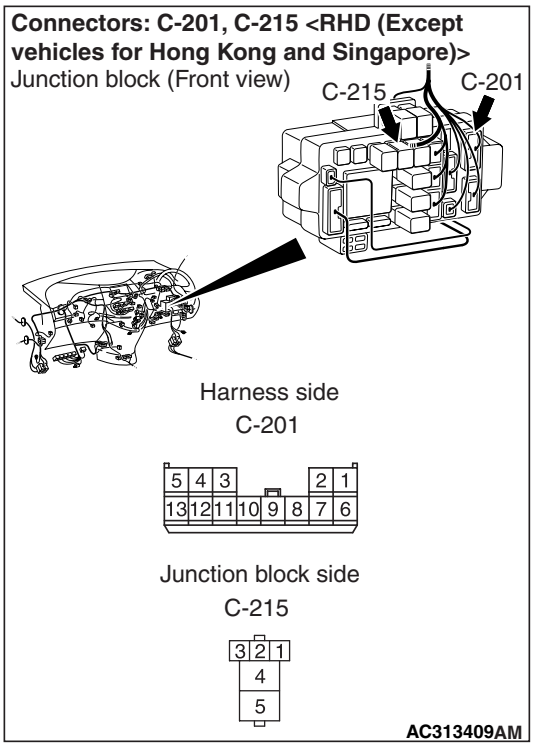

NOTE: Prior to the wiring harness inspection, check junction block connector C-201, and repair if necessary.

- Check the rear blower relay power supply line for open circuit.

Q: Is the check result normal?
YES : The trouble can be an intermittent malfunction (Refer to GROUP 00, How to Cope with Intermittent Malfunction P.00-5).
NO : Repair the wiring harness.

STEP 11. Connector check: D-10 rear blower motor

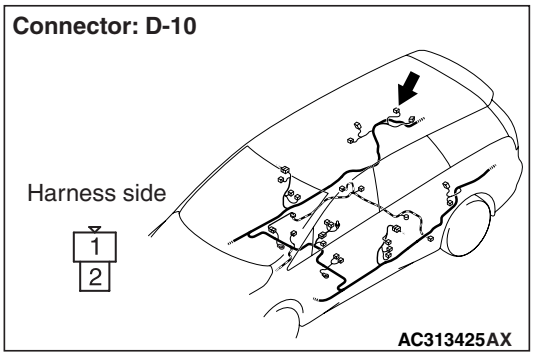

Q: Is the check result normal?
YES : Go to Step 12.
NO : Repair the connector.

STEP 12. Check the rear blower motor

Refer to P.55-234.

Q: Is the check result normal?
YES : Go to Step 13.
NO : Replace the rear blower motor.

STEP 13. Check the wiring harness between D-10 rear blower motor connector terminal No.1 and C-15 intermediate connector terminal No.1.

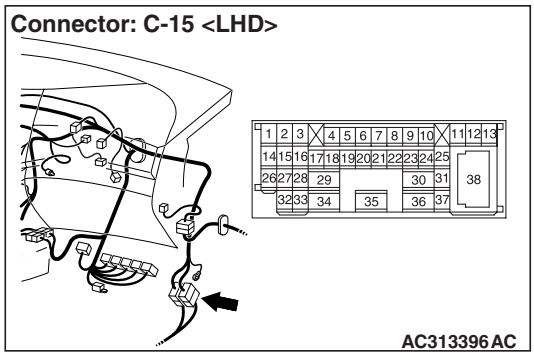

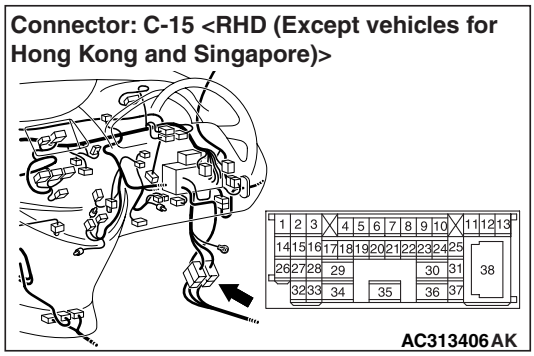

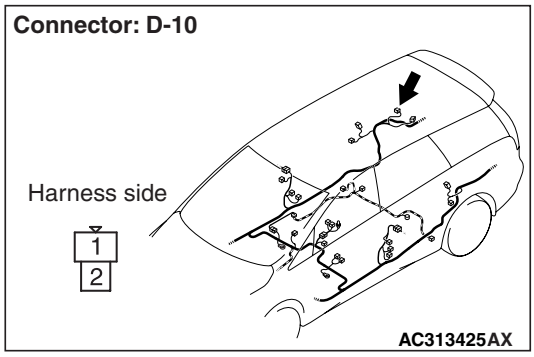

- Check the rear blower relay power supply line for open circuit.

Q: Is the check result normal?
YES : Go to Step 14.
NO : Repair the wiring harness.

Main Index
Group TOC

STEP 14. Connector check: D-11 rear power transistor connector

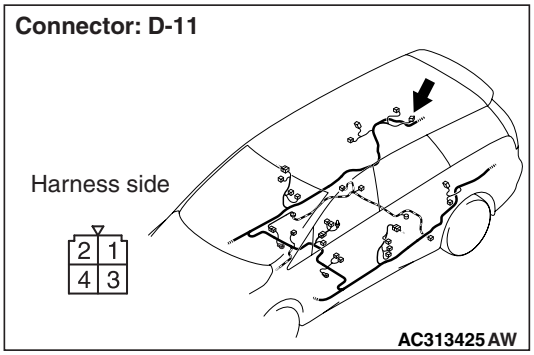

Q: Is the check result normal?
YES : Go to Step 15.
NO : Repair the connector.

STEP 15. Resistance measurement at the D-11 rear power transistor connector.

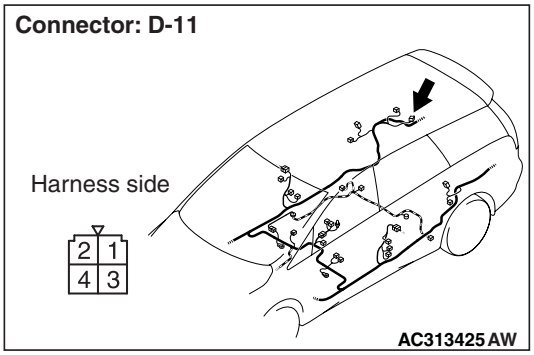

(1) Disconnect the connector, and measure at the wiring harness side.

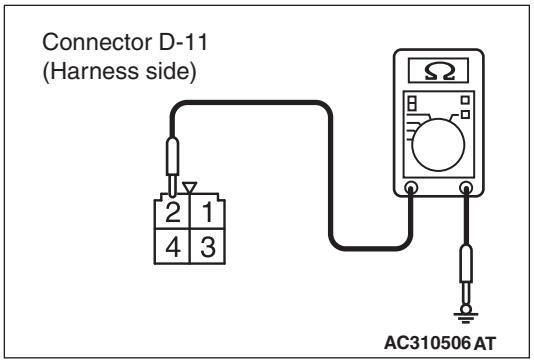

(2) Continuity between terminal 2 and body earth

OK: 2Ω or less

Q: Is the check result normal?
YES : Go to Step 17.
NO : Go to Step 16.

STEP 16. Check the wiring harness between D-11 rear power transistor terminal No.2 and body earth.

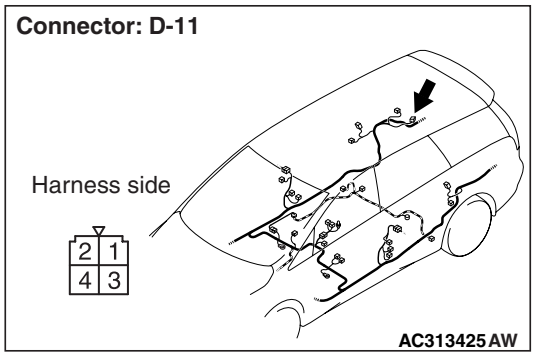

- Check the blower linear controller earth line for open circuit.

Q: Is the check result normal?
YES : The trouble can be an intermittent malfunction (Refer to GROUP 00, How to Cope with Intermittent Malfunction P.00-5).
NO : Repair the wiring harness.

STEP 17. Connector check: C-104 A/C-ECU connector

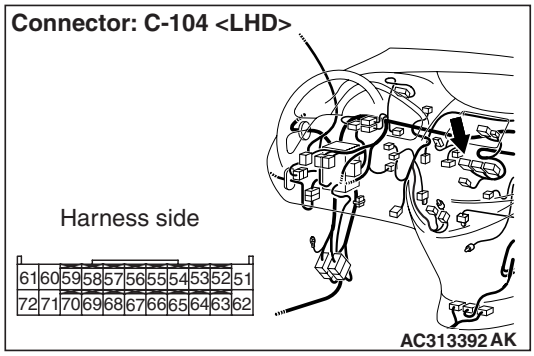

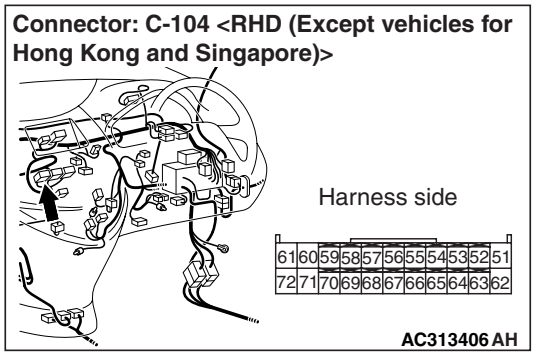

Q: Is the check result normal?
YES : Go to Step 18.
NO : Repair the connector.

STEP 18. Check the wiring harness between D-11 rear power transistor connector terminal No.4 and D-10 rear blower motor connector terminal No.2.

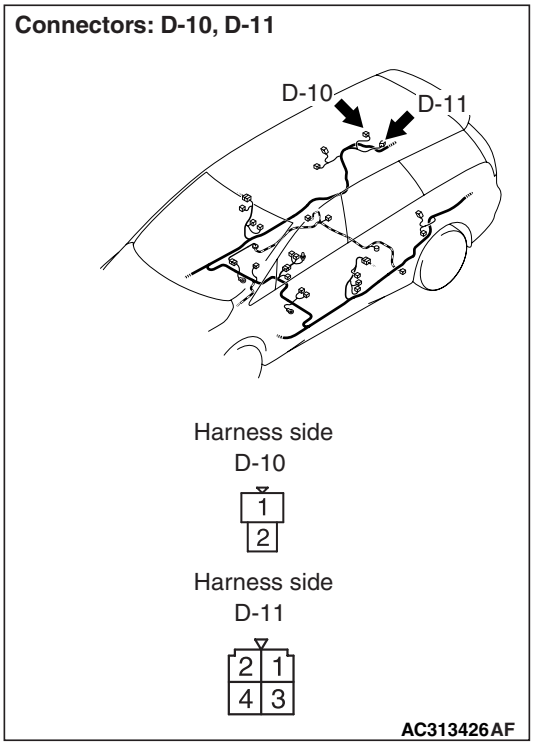

- Check the blower linear controller earth line for open circuit.

Q: Is the check result normal?
YES : Go to Step 19.
NO : Repair the wiring harness.

STEP 19. Check the wiring harness between D-11 rear power transistor connector (terminal 1 and 3) and D-10 A/C-ECU connector (terminal 60 and 59).

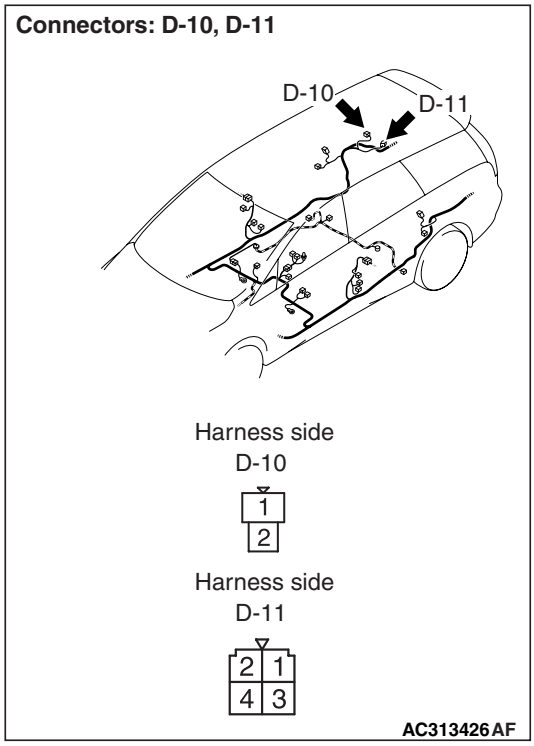

NOTE:

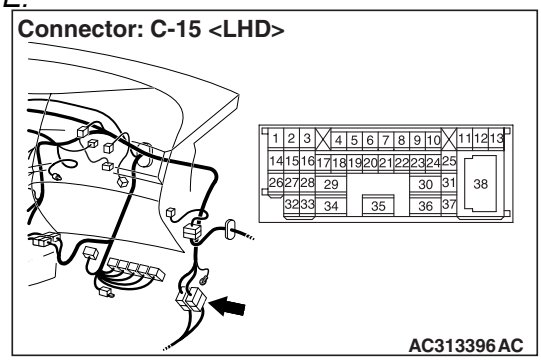

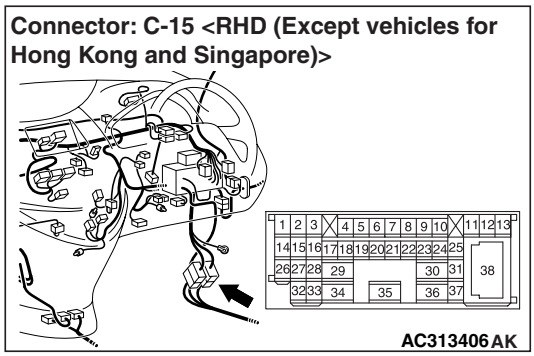

Prior to the wiring harness inspection, check intermediate connector C-15, and repair if necessary.

- Check the blower linear controller earth line for open circuit.

Main Index
Group TOC

Q: Is the check result normal?
YES : Go to Step 20.
NO : Repair the wiring harness.

STEP 20. Replace the rear power transistor and recheck the trouble symptom

Check that the rear blower motor should work normally.

Q: Is the check result normal?
YES : This diagnosis is complete.
NO : Replace the A/C-ECU.

Main Index
Group TOC

Inspection Procedure 25: Rear blower motor power supply system <Vehicles for Hong Kong and Singapore>

Rear blower motor circuit

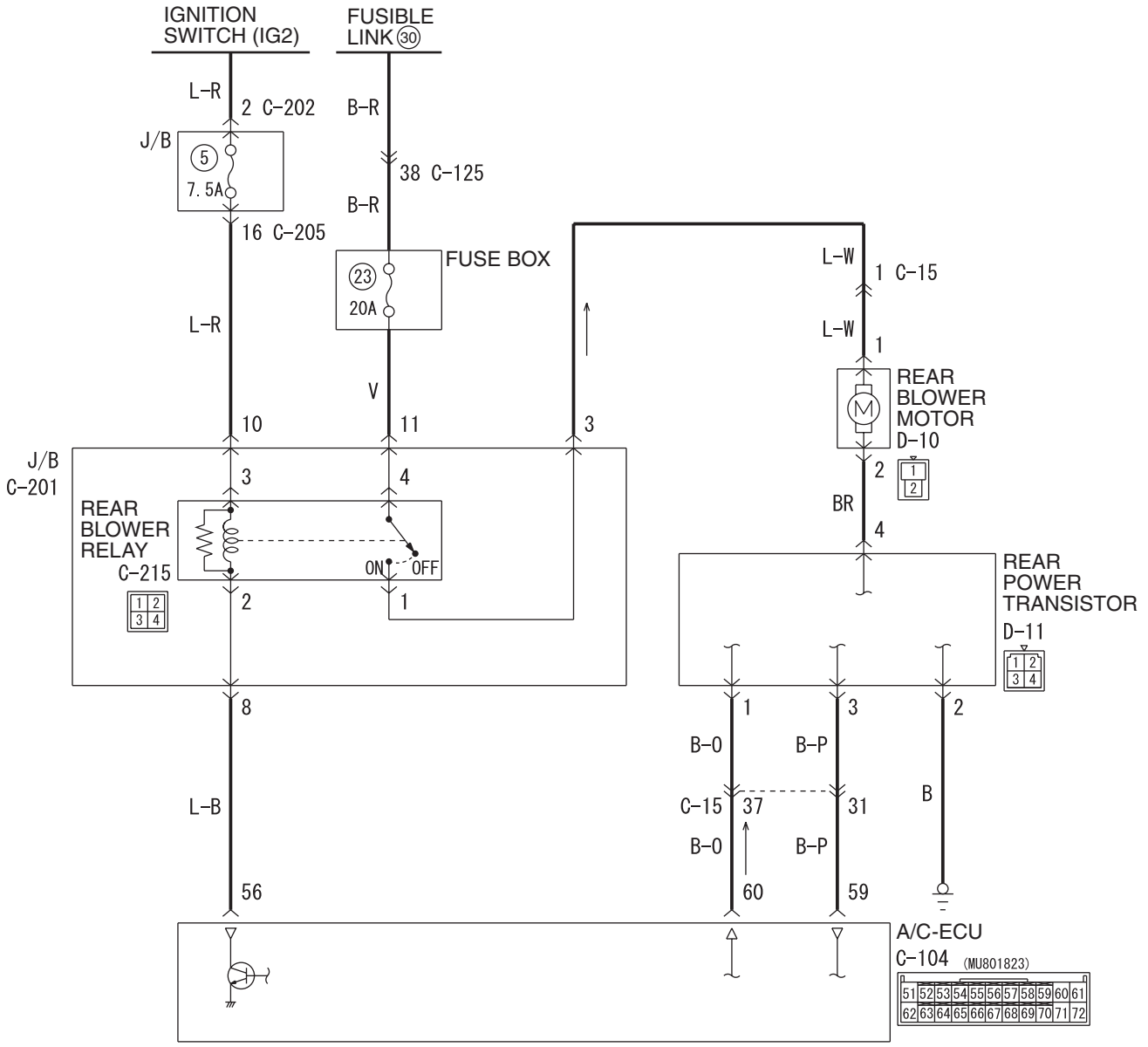

Wire colour code
B : Black LG : Light green G : Green L : Blue W : White Y : Yellow SB : Sky blue
BR : Brown O : Orange GR : Gray R : Red P : Pink V : Violet

W4X55X001A

CIRCUIT OPERATION

If the rear blower motor does not operate, the rear blower motor circuit system may be defective.

PROBABLE CAUSES

- Malfunction of rear blower relay
- Malfunction of rear blower motor
- Malfunction of rear power transistor
- Malfunction of the A/C-ECU
- Damaged harness wires and connectors

Main Index
Group TOC

DIAGNOSIS PROCEDURE

STEP 1. Connector check: C-215 rear blower motor connector

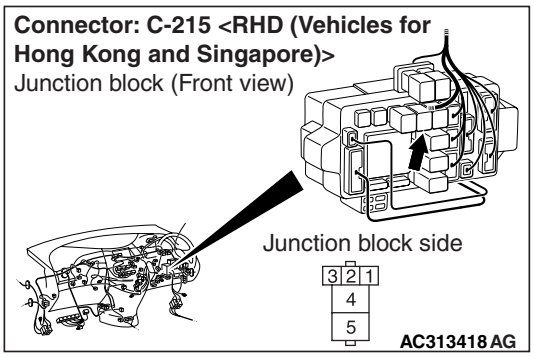

Q: Is the check result normal?
YES : Go to Step 2.
NO : Repair the connector.

STEP 2. Check the rear blower relay

Refer to P.55-208.

Q: Is the check result normal?
YES : Go to Step 3.
NO : Replace the rear blower relay.

STEP 3. Connector check: C-15 intermediate connector

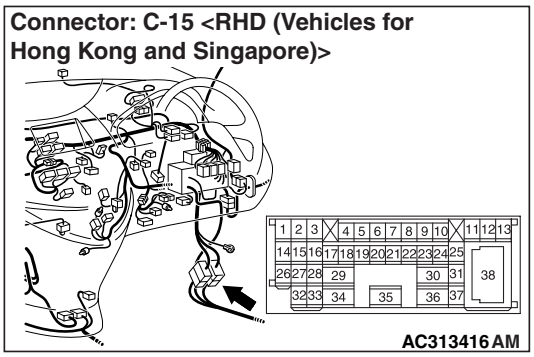

Q: Is the check result normal?
YES : Go to Step 4.
NO : Repair the connector.

STEP 4. Voltage measurement at C-15 intermediate connector.

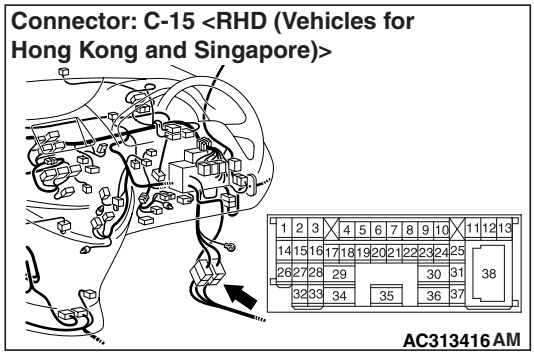

(1) Disconnect the connector, and measure at the wiring harness side.
(2) Turn the ignition switch to the ON position.

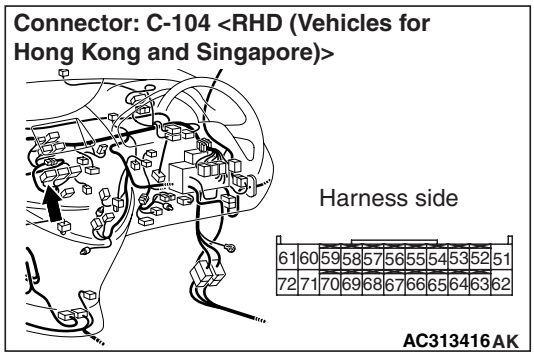

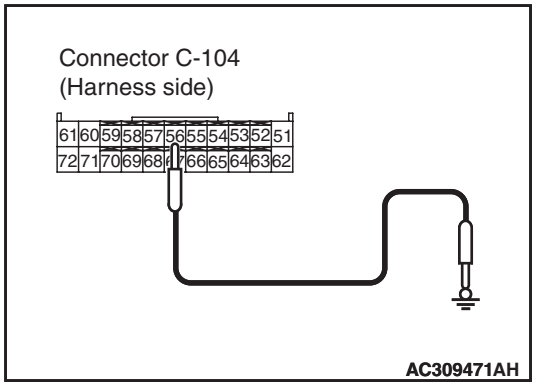

(3) Disconnect A/C-ECU connector C-104 and earth terminal 56.

Main Index
Group TOC

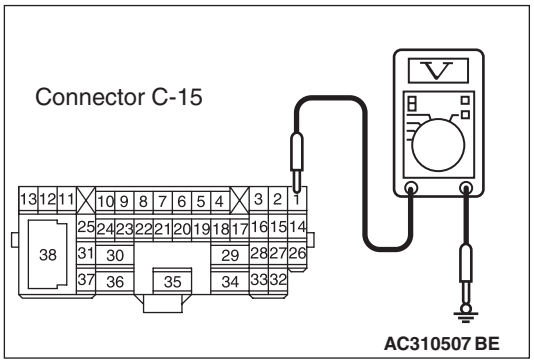

(4) Measure the voltage between terminal 1 and body earth.

OK: System voltage

Q: Is the check result normal?
YES : Go to Step 11.
NO : Go to Step 5.

STEP 5. Voltage measurement at C-215 rear blower relay connector.

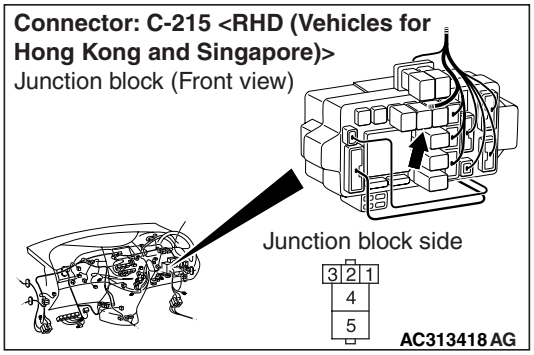

(1) Remove the relay, and measure at the relay block side.
(2) Turn the ignition switch to the "ON" position.

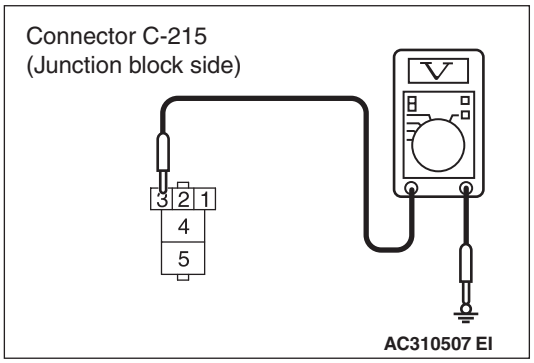

(3) Voltage between terminal 3 and body earth.

OK: System voltage

Q: Is the check result normal?
YES : Go to Step 7.
NO : Go to Step 6.

STEP 6. Check the wiring harness between C-215 rear blower relay connector terminal No.3 and the ignition switch (IG2).

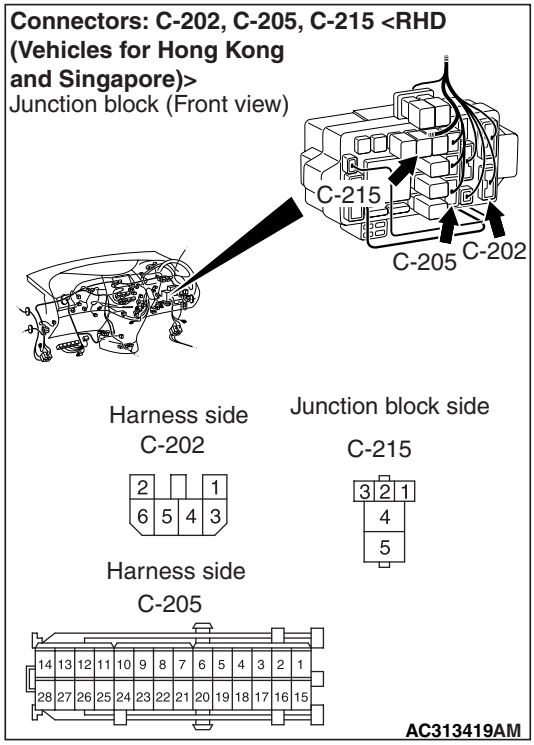

NOTE: Prior to the wiring harness inspection, check junction block connectors C-202 and C-205, and repair if necessary.

- Check the rear blower relay power supply line for open circuit.

Q: Is the check result normal?
YES : The trouble can be an intermittent malfunction (Refer to GROUP 00, How to Cope with Intermittent Malfunction P.00-5).
NO : Repair the wiring harness.

Main Index
Group TOC

STEP 7. Voltage measurement at C-215 rear blower relay connector.

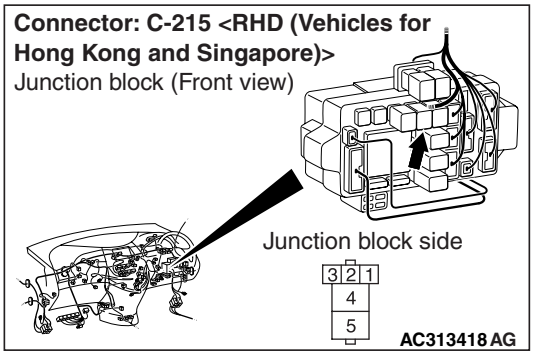

(1) Remove the relay, and measure at the relay block side.
(2) Turn the ignition switch to the "ON" position.

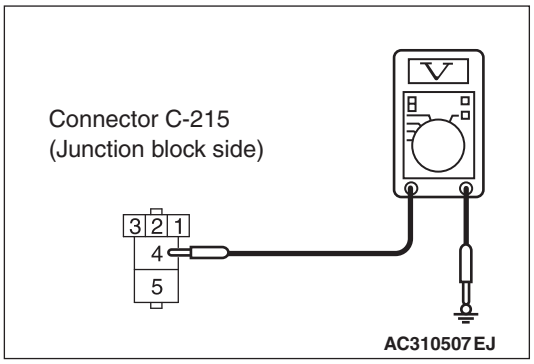

(3) Voltage between terminal 4 and body earth.

OK: System voltage

Q: Is the check result normal?
YES : Go to Step 9.
NO : Go to Step 8.

STEP 8. Check the wiring harness between C-215 rear blower relay connector terminal No.4 and the fusible link (30).

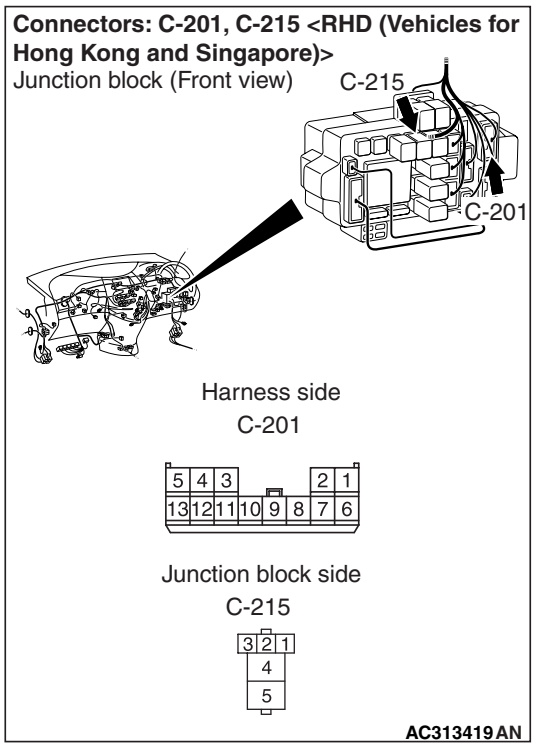

NOTE:

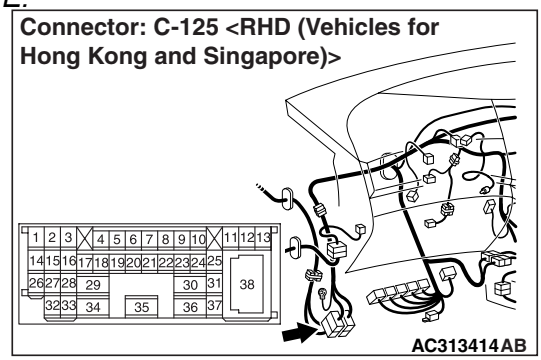

Prior to the wiring harness inspection, check intermediate connector C-125 and junction block connector C-201, and repair if necessary.

- Check the rear blower relay power supply line for open circuit.

Q: Is the check result normal?
YES : The trouble can be an intermittent malfunction (Refer to GROUP 00, How to Cope with Intermittent Malfunction P.00-5).
NO : Repair the wiring harness.

Main Index
Group TOC

STEP 9. Check the wiring harness between C-215 rear blower relay connector terminal No.2 and C-104 A/C-ECU connector terminal No.56.

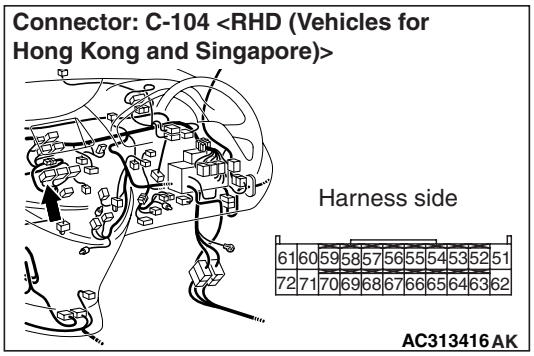

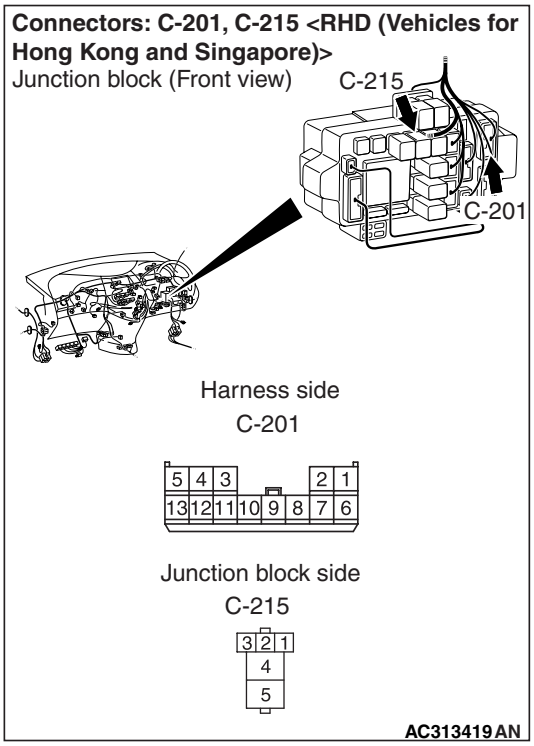

NOTE: Prior to the wiring harness inspection, check junction block connector C-201, and repair if necessary.

- Check the rear blower relay power supply line for open circuit.

Q: Is the check result normal?

YES : Go to Step 10.

NO : Repair the wiring harness.

STEP 10. Check the wiring harness between C-215 rear blower relay connector terminal No.4 and C-15 intermediate connector terminal No.1.

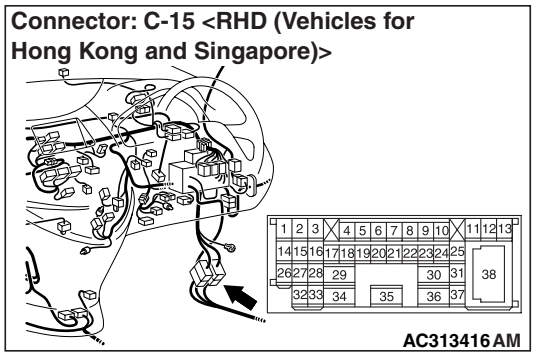

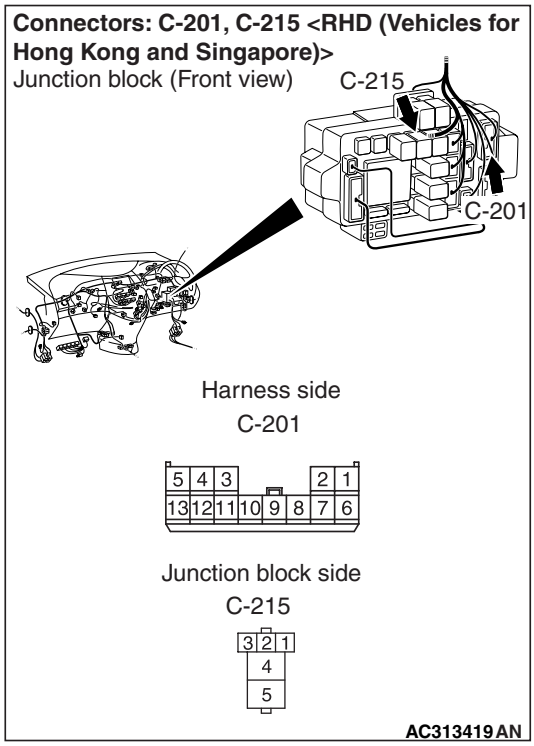

NOTE: Prior to the wiring harness inspection, check junction block connector C-201, and repair if necessary.

- Check the rear blower relay power supply line for open circuit.

Q: Is the check result normal?

YES : The trouble can be an intermittent malfunction (Refer to GROUP 00, How to Cope with Intermittent Malfunction P.00-5).

NO : Repair the wiring harness.

Main Index
Group TOC

STEP 11. Connector check: D-10 rear blower motor

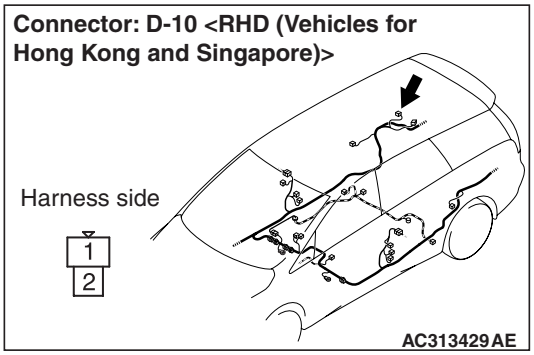

Q: Is the check result normal?
YES : Go to Step 12.
NO : Repair the connector.

STEP 12. Check the rear blower motor

Refer to P.55-234.

Q: Is the check result normal?
YES : Go to Step 13.
NO : Replace the rear blower motor.

STEP 13. Check the wiring harness between D-10 rear blower motor connector terminal No.1 and C-15 intermediate connector terminal No.1.

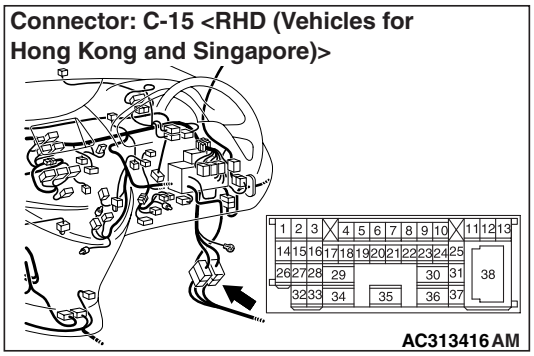

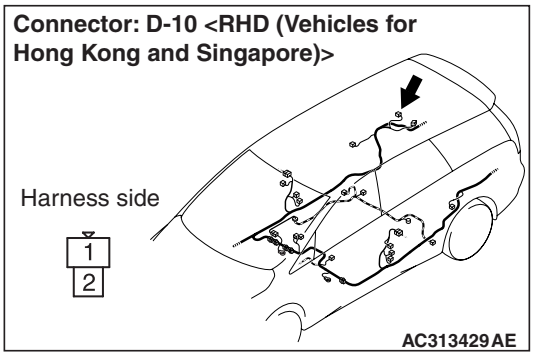

- Check the rear blower relay power supply line for open circuit.

Q: Is the check result normal?
YES : Go to Step 14.
NO : Repair the wiring harness.

STEP 14. Connector check: D-11 rear power transistor connector

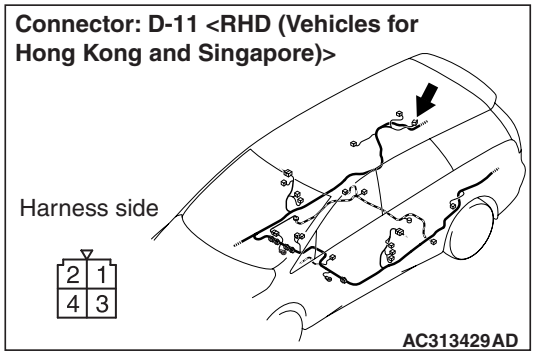

Q: Is the check result normal?
YES : Go to Step 15.
NO : Repair the connector.

STEP 15. Resistance measurement at the D-11 rear power transistor connector.

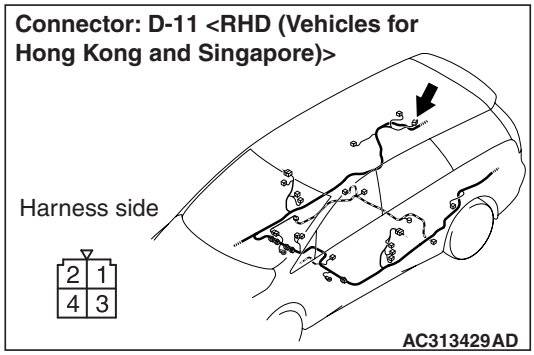

(1) Disconnect the connector, and measure at the wiring harness side.

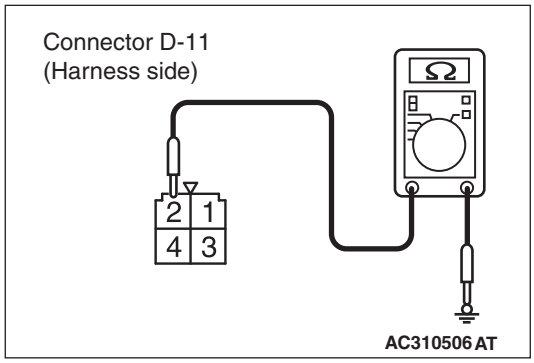

(2) Continuity between terminal 2 and body earth

OK: 2Ω or less

Q: Is the check result normal?
YES : Go to Step 17.
NO : Go to Step 16.

Main Index
Group TOC

STEP 16. Check the wiring harness between D-11 rear power transistor terminal No.2 and body earth.

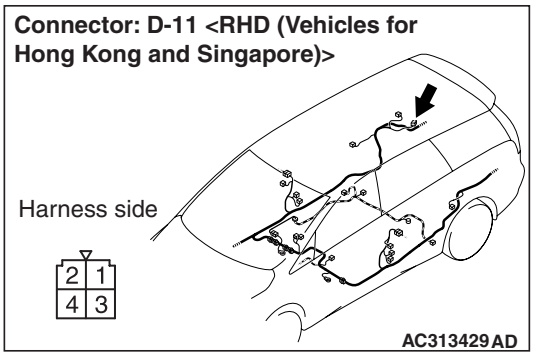

- Check the blower linear controller earth line for open circuit.

Q: Is the check result normal?
YES : The trouble can be an intermittent malfunction (Refer to GROUP 00, How to Cope with Intermittent Malfunction P.00-5).
NO : Repair the wiring harness.

STEP 17. Connector check: C-104 A/C-ECU connector

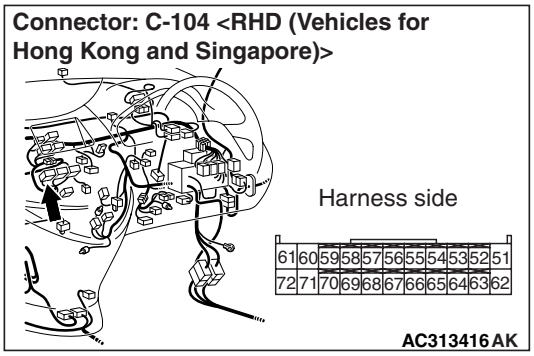

Q: Is the check result normal?
YES : Go to Step 18.
NO : Repair the connector.

STEP 18. Check the wiring harness between D-11 rear power transistor connector terminal No.4 and D-10 rear blower motor connector terminal No.2.

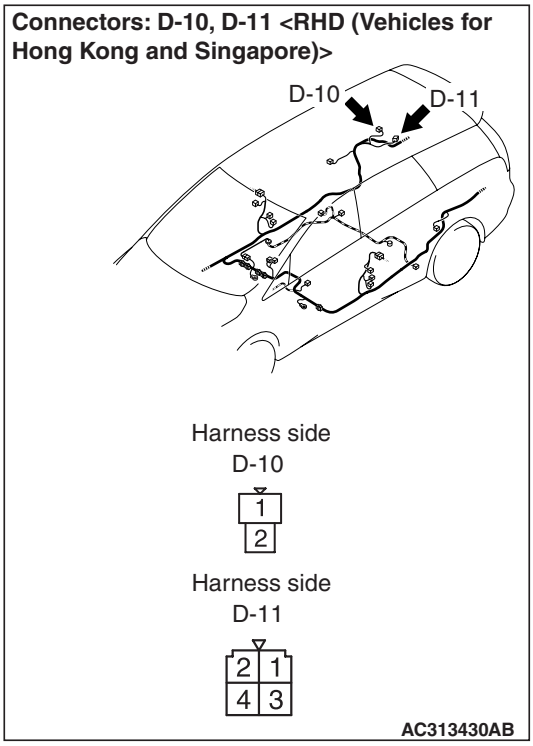

- Check the blower linear controller earth line for open circuit.

Q: Is the check result normal?
YES : Go to Step 19.
NO : Repair the wiring harness.

Main Index
Group TOC

STEP 19. Check the wiring harness between D-11 rear power transistor connector (terminal 1 and 3) and D-10 A/C-ECU connector (terminal 60 and 59).

Connectors: D-10, D-11 <RHD (Vehicles for Hong Kong and Singapore)>

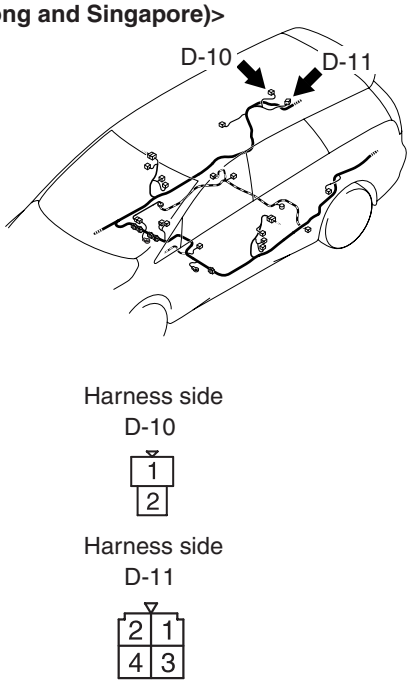

AC313430AB

NOTE:

Connector: C-15 <RHD (Vehicles for Hong Kong and Singapore)>

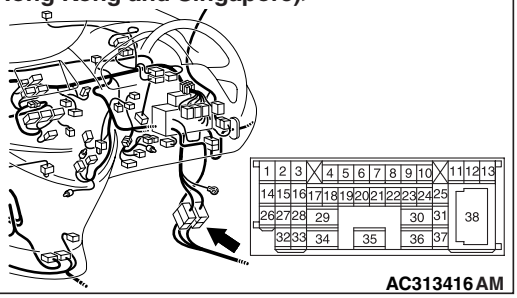

AC313416AM

Prior to the wiring harness inspection, check intermediate connector C-15, and repair if necessary.

- Check the blower linear controller earth line for open circuit.

Q: Is the check result normal?
YES : Go to Step 20.
NO : Repair the wiring harness.

STEP 20. Replace the rear power transistor and recheck the trouble symptom

Check that the rear blower motor should work normally.

Q: Is the check result normal?
YES : This diagnosis is complete.
NO : Replace the A/C-ECU.

Inspection Procedure 26: PTC heater switch system <Except vehicles for Hong Kong and Singapore>

PTC Heater Switch Circuit

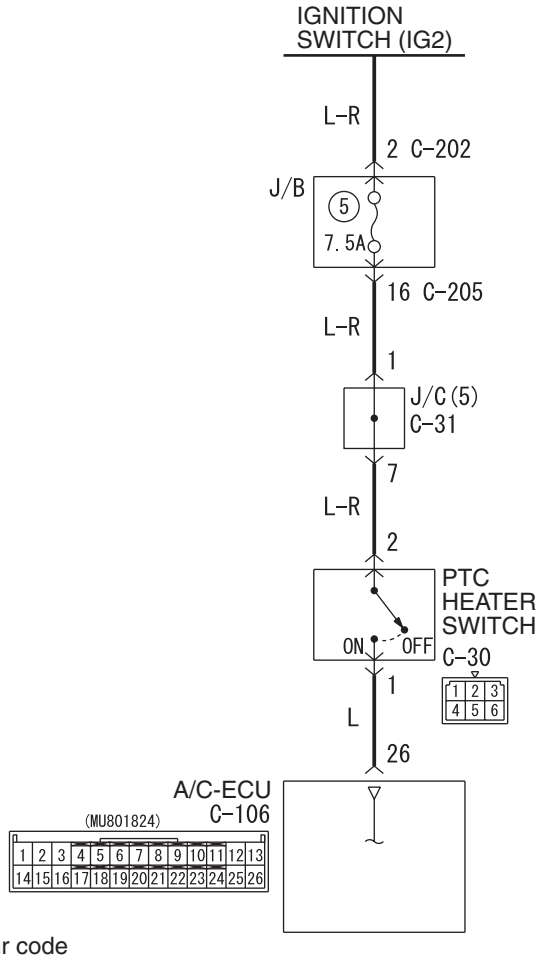

Wire colour code
B : Black LG : Light green G : Green L : Blue W : White Y : Yellow SB : Sky blue
BR : Brown O : Orange GR : Gray R : Red P : Pink V : Violet

W4X55E048A

COMMENTS ON TROUBLE SYMPTOM

If a PTC heater switch signal is not set to the A/C-ECU, the PTC heater switch or the PTC heater switch circuit system may be defective.

PROBABLE CAUSES

- Malfunction of the PTC heater switch
- Malfunction of the automatic air conditioner control panel (A/C-ECU)

Main Index
Group TOC

DIAGNOSIS PROCEDURE

STEP 1. Connector check: C-30 PTC heater switch connector

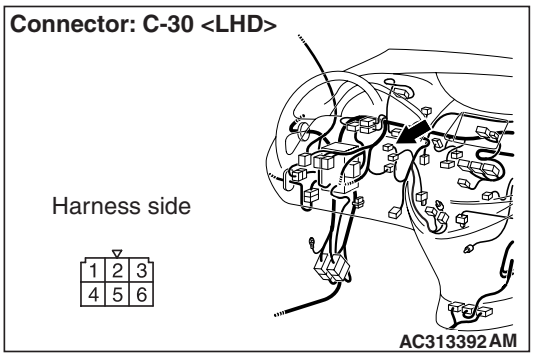

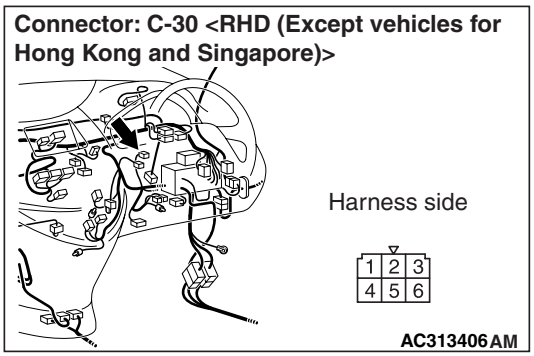

Q: Is the check result normal?
YES : Go to Step 2.
NO : Repair the connector.

STEP 2. Check the PTC heater switch.

Refer to P.55-227.

Q: Is the refrigerant temperature switch operating properly?
YES : Go to Step 3.
NO : Replace the refrigerant temperature switch.

STEP 3. Voltage measurement at C-30 PTC heater switch connector.

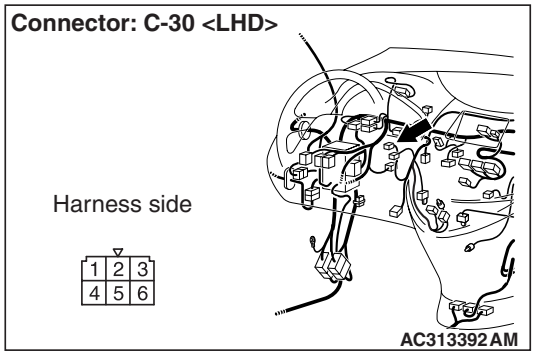

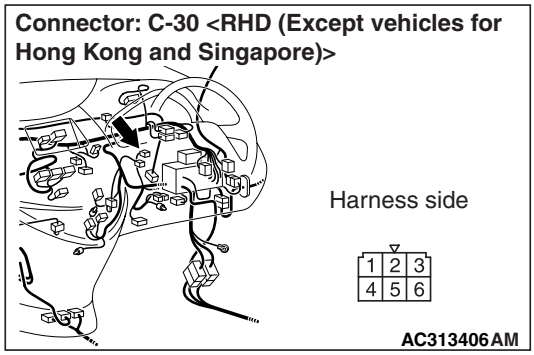

(1) Disconnect the connector, and measure at the wiring harness side.
(2) Turn the ignition switch to the "ON" position.

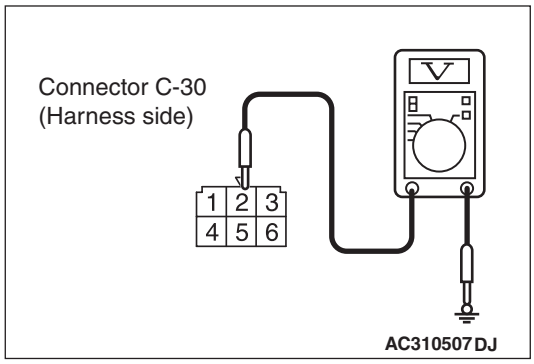

(3) Voltage between terminal 2 and body earth.

OK: System voltage

Q: Is the check result normal?
YES : Go to Step 5.
NO : Go to Step 4.

Main Index
Group TOC

STEP 4. Check the wiring harness between C-30 PTC heater switch connector terminal No.2 and the ignition switch (IG2).

Connectors: C-30, C-31 <LHD>

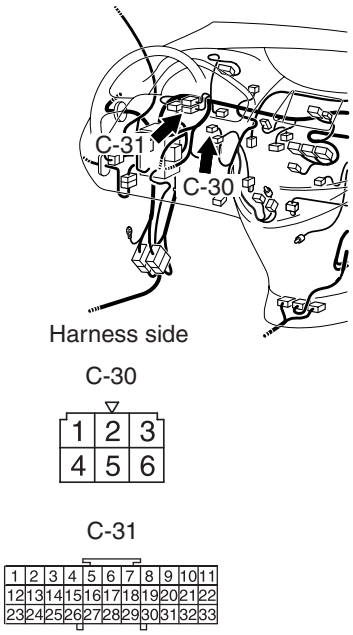

AC313393AT

Connectors: C-30, C-31 <RHD (Except vehicles for Hong Kong and Singapore)>

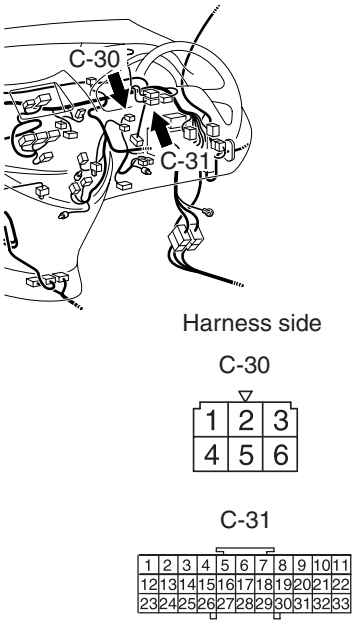

AC313407BL

NOTE:

Connectors: C-202, C-205 <LHD>
Junction block (Front view)

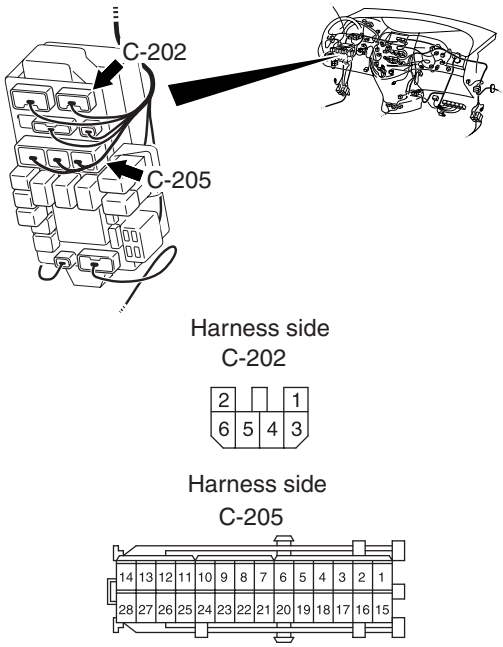

AC313399AE

Connectors: C-202, C-205 <RHD (Except vehicles for Hong Kong and Singapore>

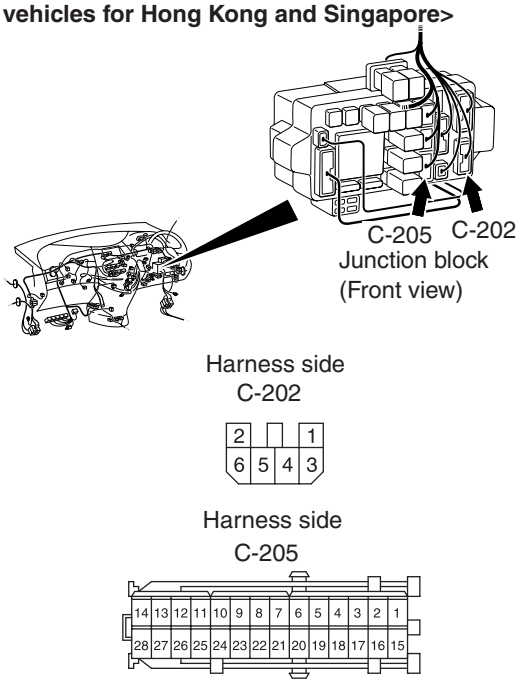

AC313409AE

Prior to the wiring harness inspection, check joint connector C-31 and junction block connector C-205 and C-202, and repair if necessary.

- Check the PTC heater switch power supply line for open circuit.

Q: Is the check result normal?

YES : The trouble can be an intermittent malfunction (Refer to GROUP 00, How to Cope with Intermittent Malfunction P.00-5).

NO : Repair the wiring harness.

Main Index
Group TOC

STEP 5. Connector check: C-106 A/C-ECU connector

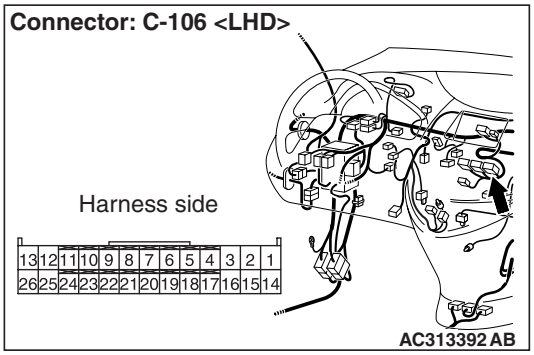

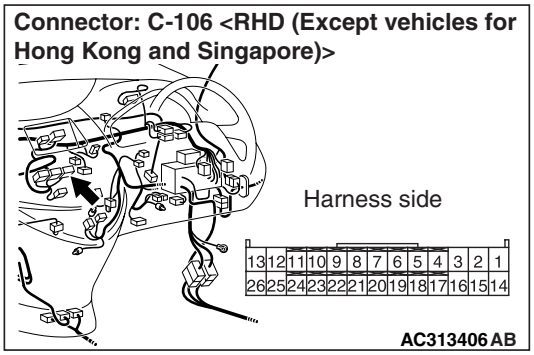

Q: Is the check result normal?

YES : Go to Step 6.

NO : Repair the connector.

STEP 6. Check the wiring harness between C-30 PTC heater switch connector terminal No.1 and C-106 A/C-ECU connector terminal No.26.

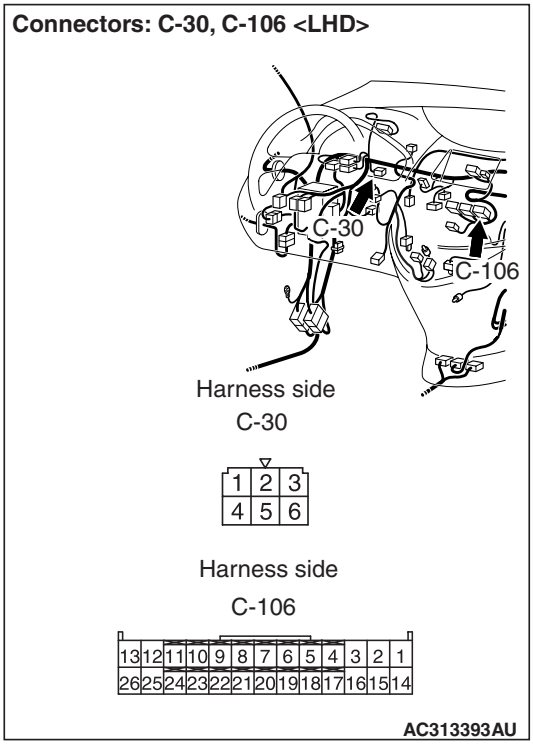

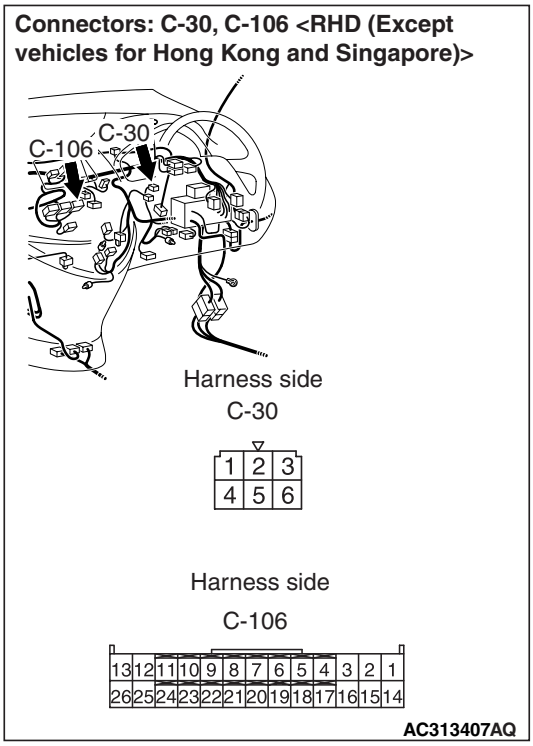

- Check the PTC heater switch earth line for open circuit.

Q: Is the check result normal?

YES : The trouble can be an intermittent malfunction (Refer to GROUP 00, How to Cope with Intermittent Malfunction P.00-5).

NO : Repair the wiring harness.

Main Index
Group TOC

Inspection Procedure 27: PTC heater switch system <Vehicles for Hong Kong and Singapore>

PTC Heater Switch Circuit

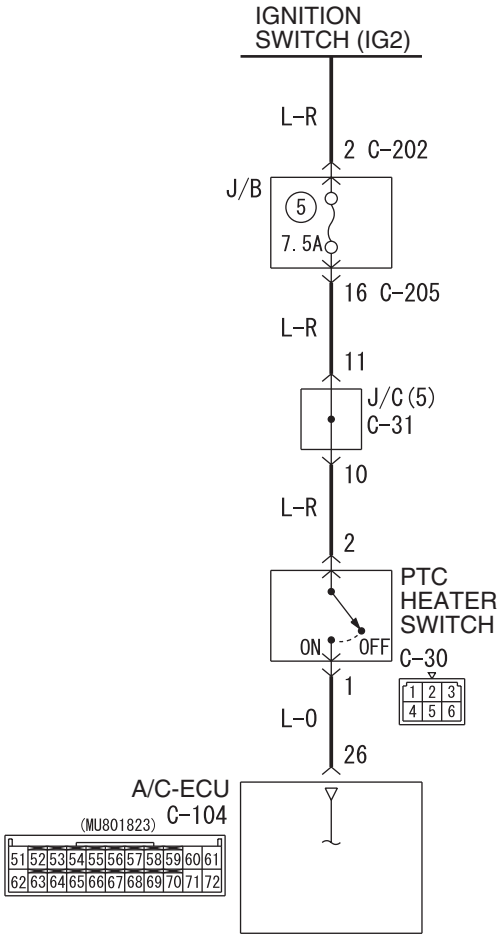

Wire colour code
B : Black LG : Light green G : Green L : Blue W : White Y : Yellow SB : Sky blue
BR : Brown O : Orange GR : Grey R : Red P : Pink V : Violet PU : Purple

W6X55X018A

COMMENTS ON TROUBLE SYMPTOM

If a PTC heater switch signal is not set to the A/C-ECU, the PTC heater switch or the PTC heater switch circuit system may be defective.

PROBABLE CAUSES

- Malfunction of the PTC heater switch
- Malfunction of the automatic air conditioner control panel (A/C-ECU)

Main Index
Group TOC

DIAGNOSIS PROCEDURE

STEP 1. Connector check: C-30 PTC heater switch connector

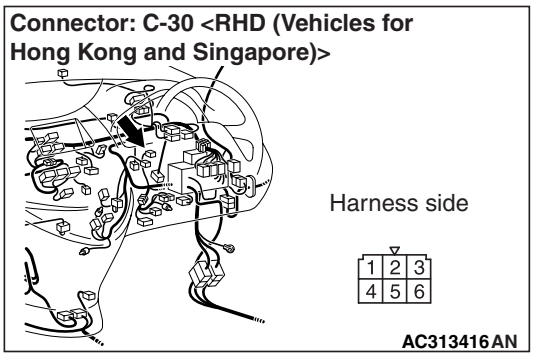

Q: Is the check result normal?
YES : Go to Step 2.
NO : Repair the connector.

STEP 2. Check the PTC heater switch.

Refer to P.55-227.

Q: Is the refrigerant temperature switch operating properly?
YES : Go to Step 3.
NO : Replace the refrigerant temperature switch.

STEP 3. Voltage measurement at C-30 PTC heater switch connector.

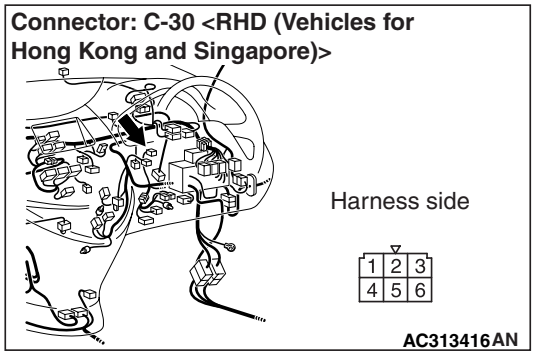

(1) Disconnect the connector, and measure at the wiring harness side.
(2) Turn the ignition switch to the "ON" position.

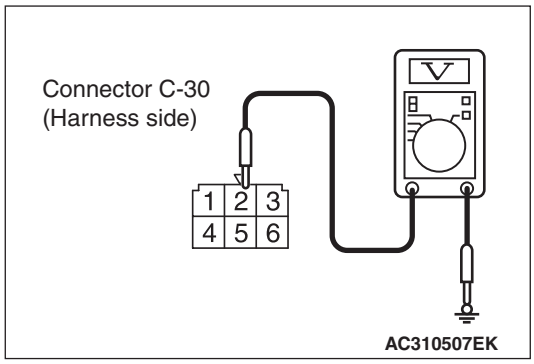

(3) Voltage between terminal 2 and body earth.

OK: System voltage

Q: Is the check result normal?
YES : Go to Step 5.
NO : Go to Step 4.

Main Index
Group TOC

STEP 4. Check the wiring harness between C-30 PTC heater switch connector terminal No.2 and the ignition switch (IG2).

Connectors: C-30, C-31 <RHD (Except vehicles for Hong Kong and Singapore)>

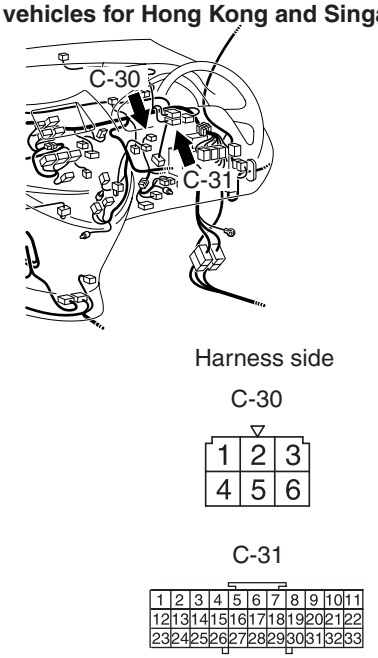

AC313417BC

NOTE:

Connectors: C-202, C-205 <RHD (Vehicles for Hong Kong and Singapore)>
Junction block (Front view)

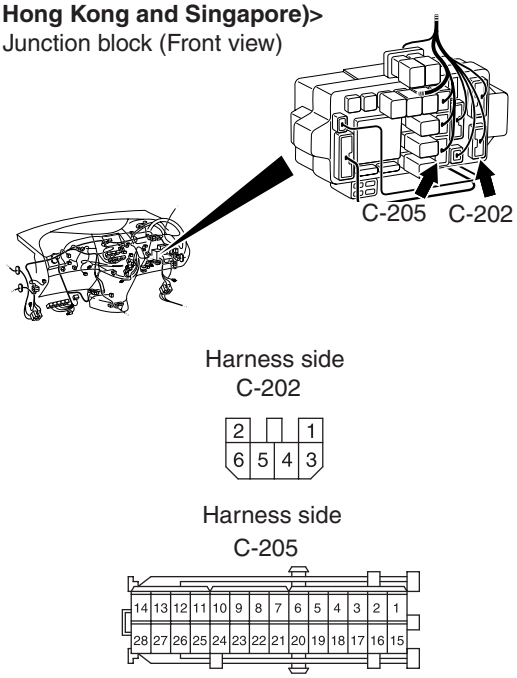

AC313419AE

Prior to the wiring harness inspection, check joint connector C-31 and junction block connector C-205 and C-202, and repair if necessary.

- Check the PTC heater switch power supply line for open circuit.

Q: Is the check result normal?
YES : The trouble can be an intermittent malfunction (Refer to GROUP 00, How to Cope with Intermittent Malfunction P.00-5).
NO : Repair the wiring harness.

STEP 5. Connector check: C-106 A/C-ECU connector

Connector: C-106 <RHD (Vehicles for Hong Kong and Singapore)>

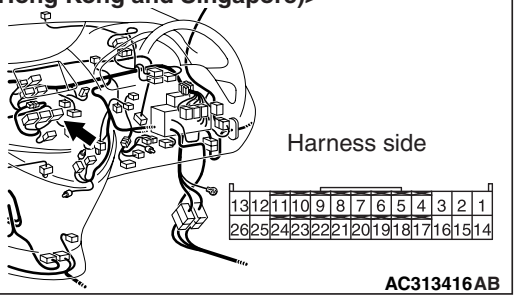

AC313416AB

Q: Is the check result normal?
YES : Go to Step 6.
NO : Repair the connector.

STEP 6. Check the wiring harness between C-30 PTC heater switch connector terminal No.1 and C-106 A/C-ECU connector terminal No.26.

Connectors: C-30, C-106 <RHD (Vehicles for Hong Kong and Singapore)>

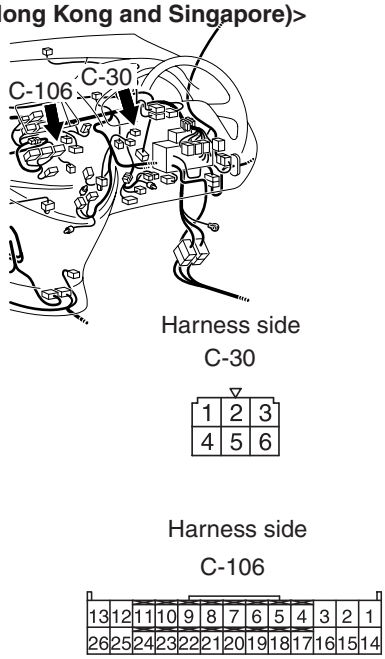

AC313417AP

- Check the PTC heater switch earth line for open circuit.

Main Index
Group TOC

Q: Is the check result normal?

YES : The trouble can be an intermittent malfunction (Refer to GROUP 00, How to Cope with Intermittent Malfunction P.00-5).

NO : Repair the wiring harness.

Inspection Procedure 28: A/C-ECU power supply system <Except vehicles for Hong Kong and Singapore>

A/C-ECU Power Supply Circuit

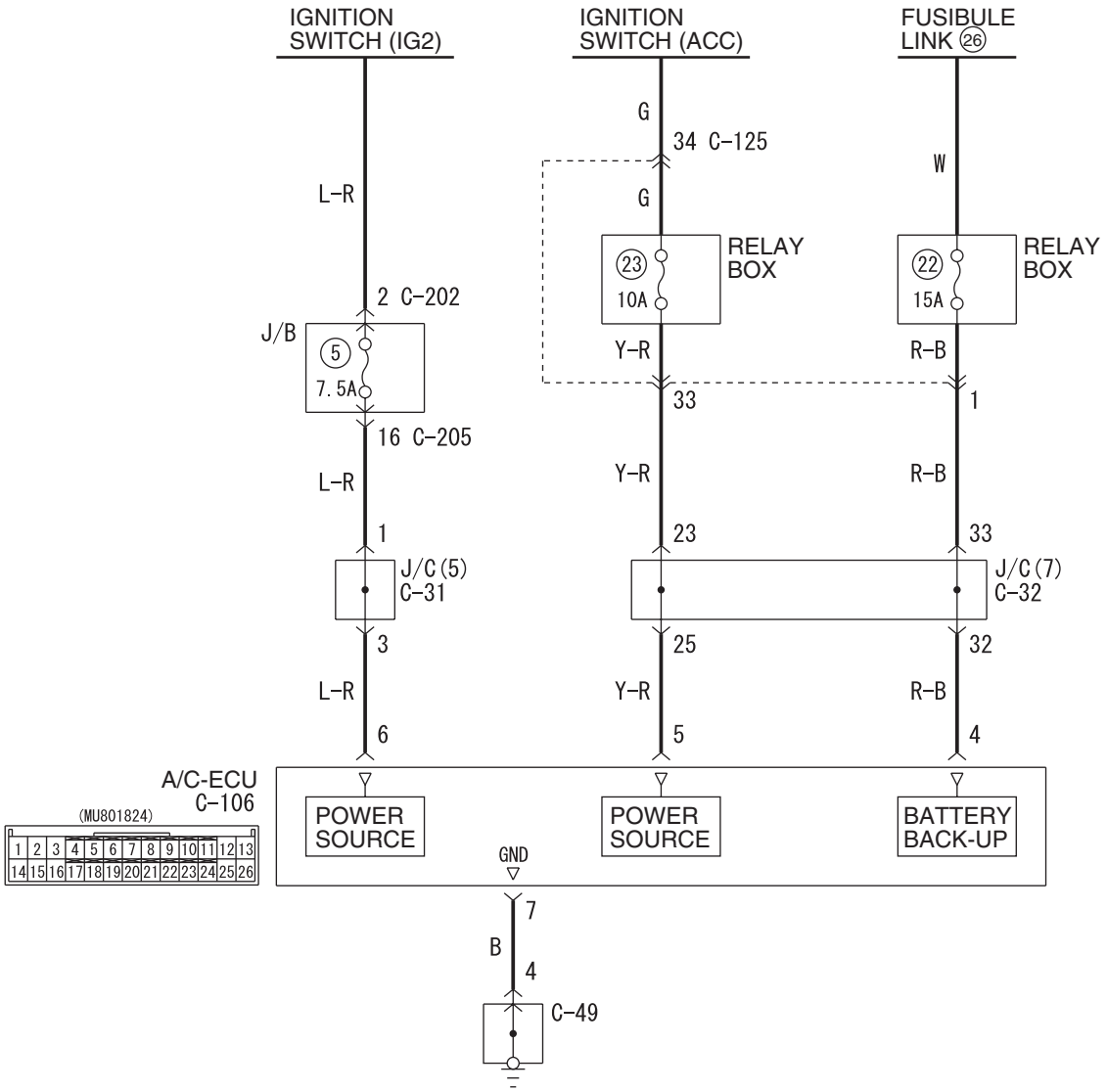

Wire colour code
B : Black LG : Light green G : Green L : Blue W : White Y : Yellow SB : Sky blue
BR : Brown O : Orange GR : Grey R : Red P : Pink V : Violet PU : Purple

W6X55X020A

CIRCUIT OPERATION

If a power supply is not provided to the A/C-ECU, the A/C-ECU power supply system or the earth system may be defective.

PROBABLE CAUSES

- Malfunction of the A/C-ECU
- Damaged harness wires and connectors

DIAGNOSIS PROCEDURE

STEP 1. Connector check: C-106 A/C-ECU connector

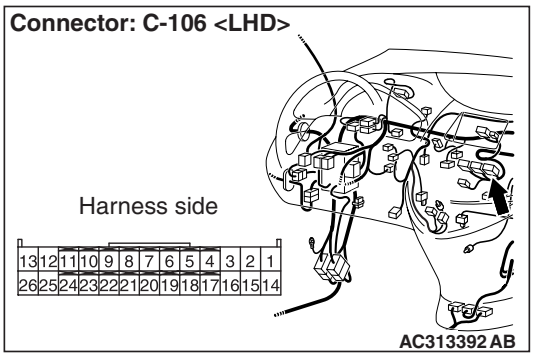

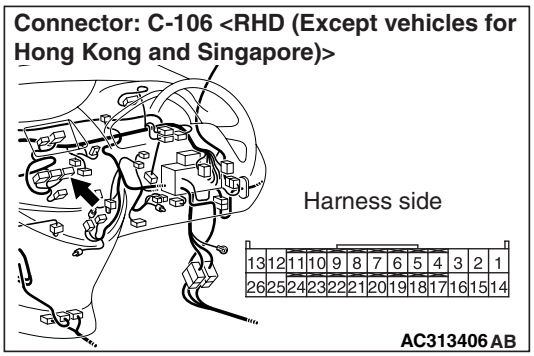

Q: Is the check result normal?
YES : Go to Step 2.
NO : Repair the connector.

STEP 2. Voltage measurement at C-106 A/C-ECU connector.

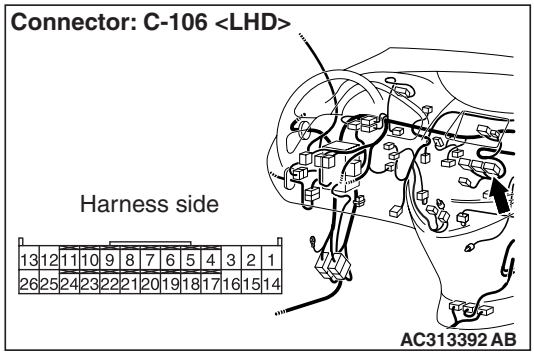

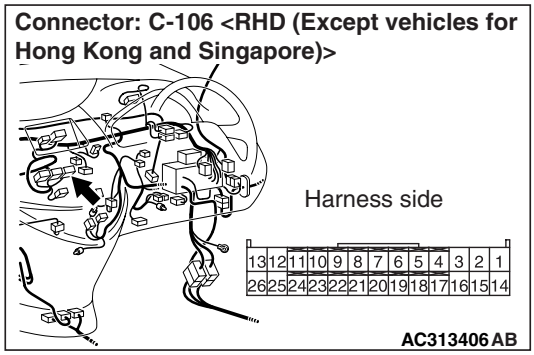

(1) Disconnect the connector, and measure at the wiring harness side.
(2) Turn the ignition switch to the ON position.

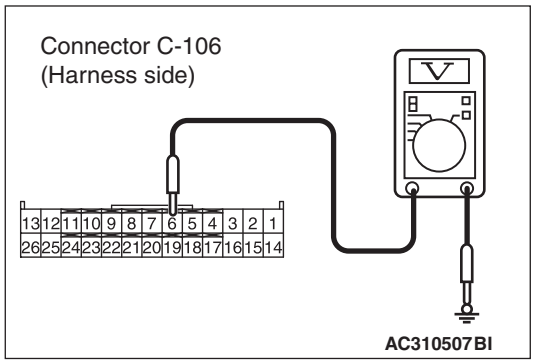

(3) Measure the voltage between terminal 6 and body earth.

OK: System voltage

Q: Is the check result normal?
YES : Go to Step 4.
NO : Go to Step 3.

Main Index
Group TOC

STEP 3. Check the wiring harness between C-106 A/C-ECU connector terminal No.6 and the ignition switch (IG2).

Connectors: C-31, C-106 <LHD>

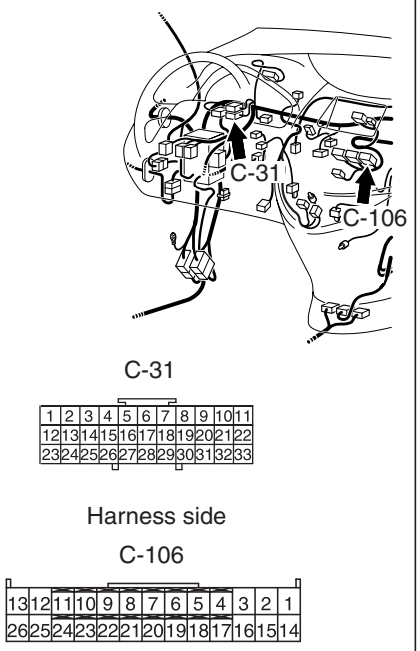

AC313393AV

Connectors: C-31, C-106 <RHD (Except vehicles for Hong Kong and Singapore)>

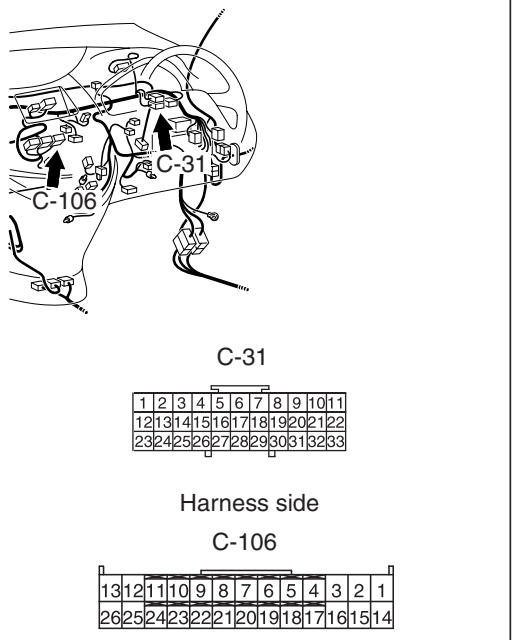

AC313407BM

NOTE:

Connectors: C-202, C-205 <LHD>
Junction block (Front view)

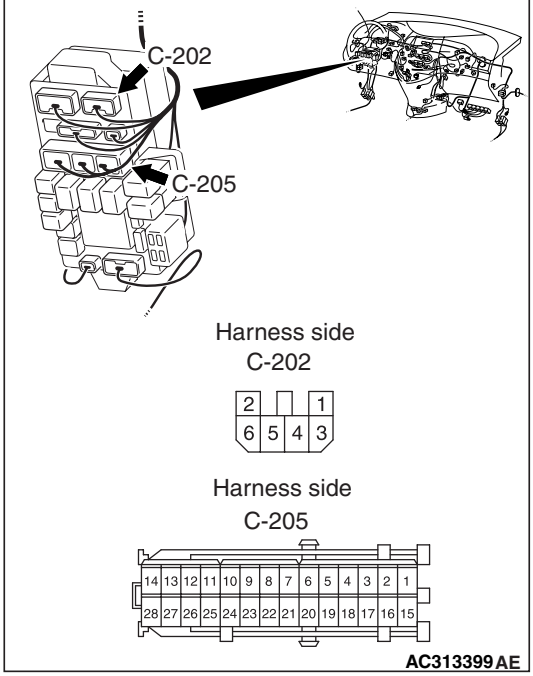

AC313399AE

Connectors: C-202, C-205 <RHD (Except vehicles for Hong Kong and Singapore>

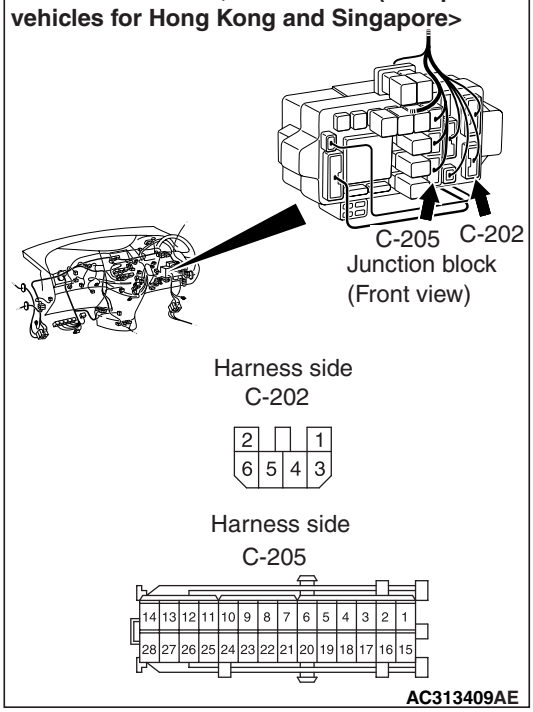

AC313409AE

Prior to the wiring harness inspection, check joint connector C-31 and junction block connector C-205 and C-202, and repair if necessary.

- Check the A/C-ECU power supply line for open circuit.

Q: Is the check result normal?

YES : The trouble can be an intermittent malfunction (Refer to GROUP 00, How to Cope with Intermittent Malfunction P.00-5).

NO : Repair the wiring harness.

Main Index
Group TOC

STEP 4. Voltage measurement at C-106 A/C-ECU connector.

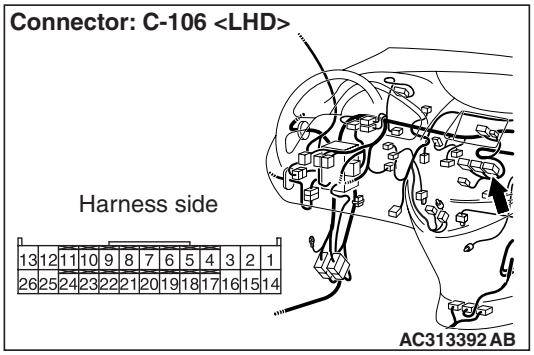

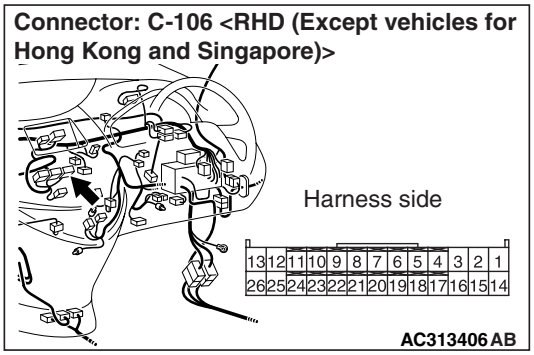

(1) Disconnect the connector, and measure at the wiring harness side.
(2) Turn the ignition switch to the ON position.

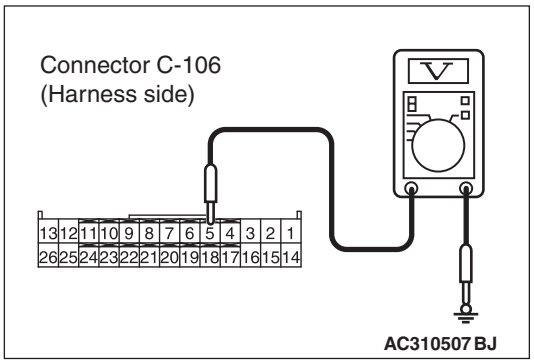

(3) Measure the voltage between terminal 5 and body earth.

OK: System voltage

Q: Is the check result normal?
YES : Go to Step 6.
NO : Go to Step 5.

STEP 5. Check the wiring harness between C-106 A/C-ECU connector terminal No.5 and the ignition switch (ACC).

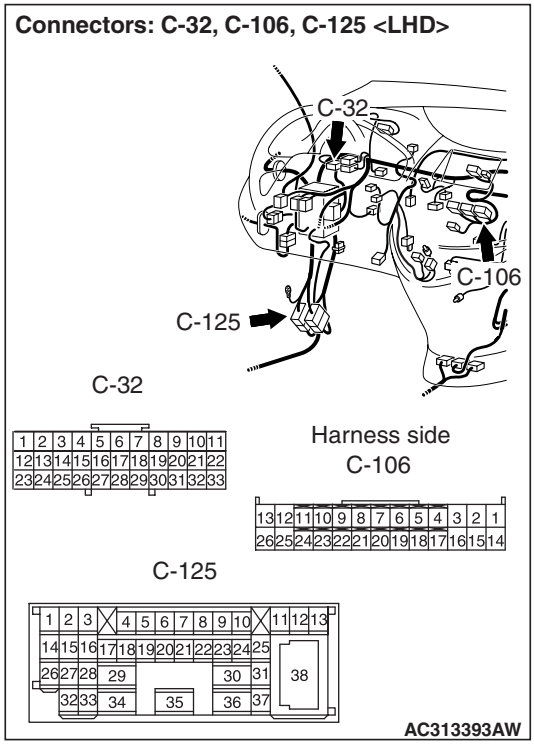

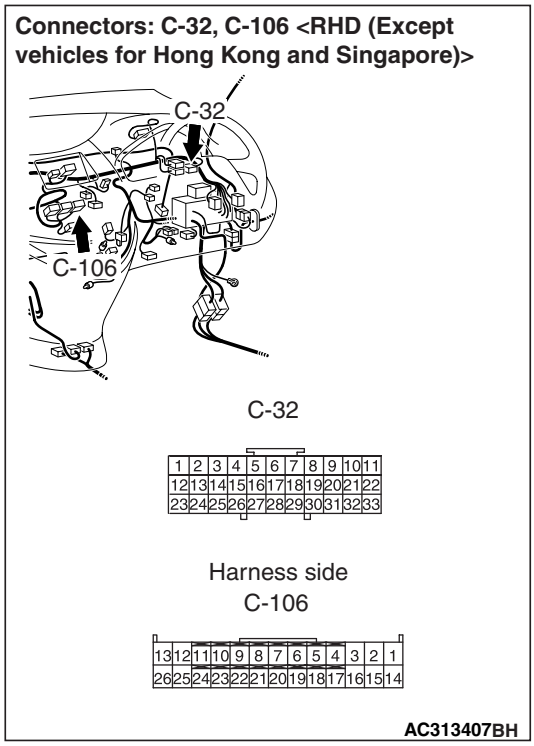

Main Index
Group TOC

NOTE:

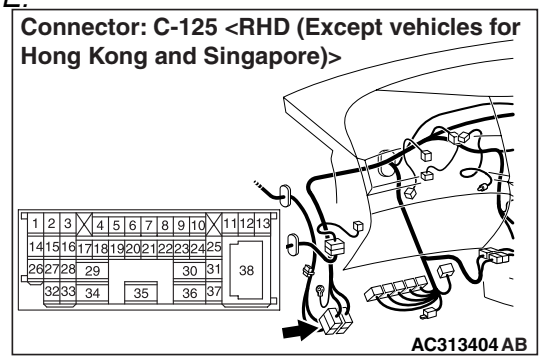

Prior to the wiring harness inspection, check joint connector C-32 and intermediate connector C-125, and repair if necessary.

- Check the A/C-ECU power supply line for open circuit.

Q: Is the check result normal?

YES : The trouble can be an intermittent malfunction (Refer to GROUP 00, How to Cope with Intermittent Malfunction P.00-5).

NO : Repair the wiring harness.

STEP 6. Voltage measurement at C-106 A/C-ECU connector.

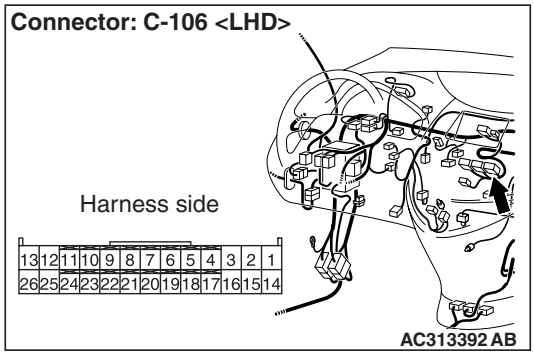

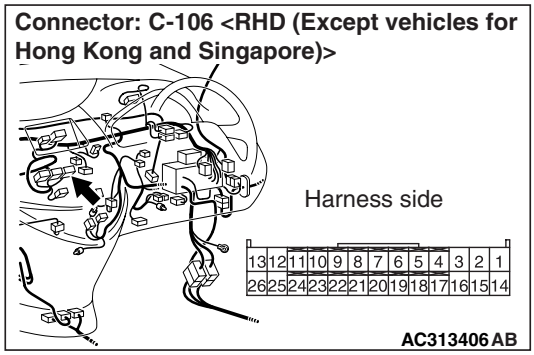

(1) Disconnect the connector, and measure at the wiring harness side.

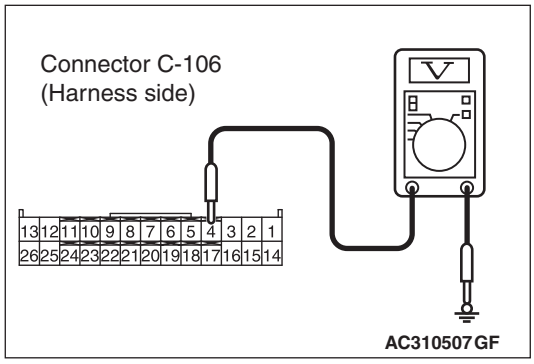

(2) Measure the voltage between terminal 4 and body earth.

OK: System voltage

Q: Is the check result normal?

YES : Go to Step 8.

NO : Go to Step 7.

Main Index
Group TOC

STEP 7. Check the wiring harness between C-106 A/C-ECU connector terminal No.4 and the fusible link (30).

Connectors: C-32, C-106, C-125 <LHD>

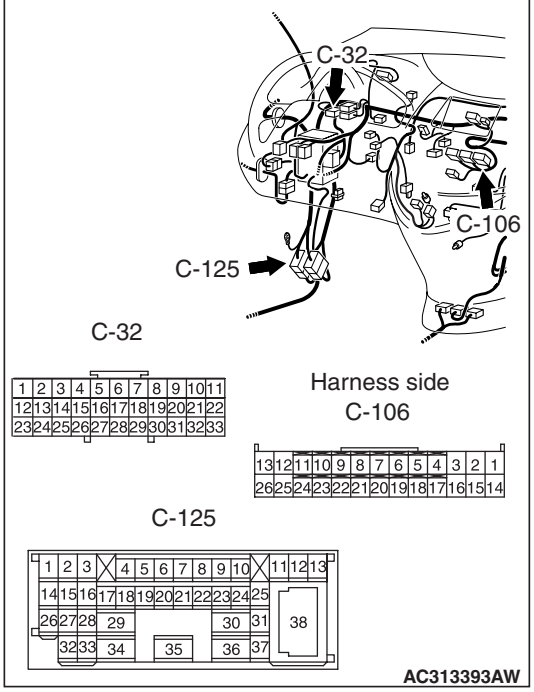

Connectors: C-32, C-106 <RHD (Except vehicles for Hong Kong and Singapore)>

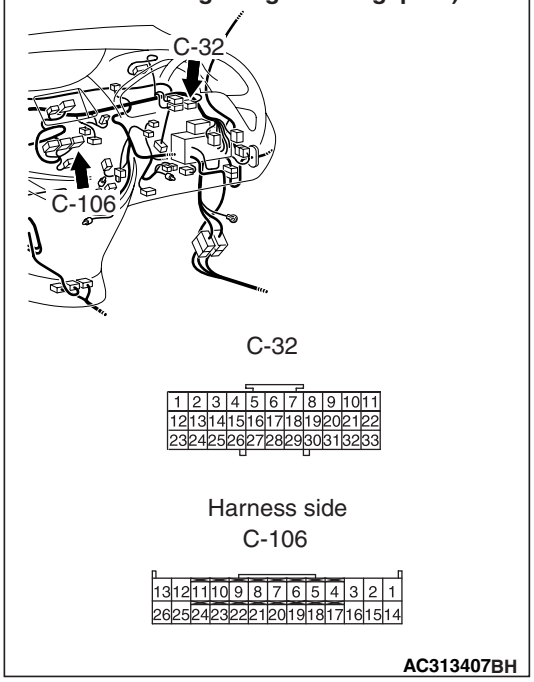

NOTE:

Connector: C-125 <RHD (Except vehicles for Hong Kong and Singapore)>

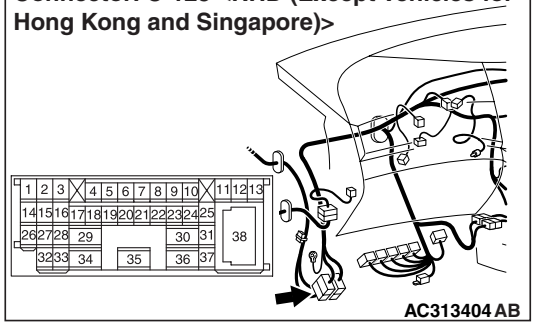

Prior to the wiring harness inspection, check joint connector C-32 and intermediate connector C-125, and repair if necessary.

- Check the rear fan switch power supply line for open circuit.

Q: Is the check result normal?

YES : The trouble can be an intermittent malfunction (Refer to GROUP 00, How to Cope with Intermittent Malfunction P.00-5).

NO : Repair the wiring harness.

Main Index
Group TOC

STEP 8. Resistance measurement at the C-106 front power transistor connector.

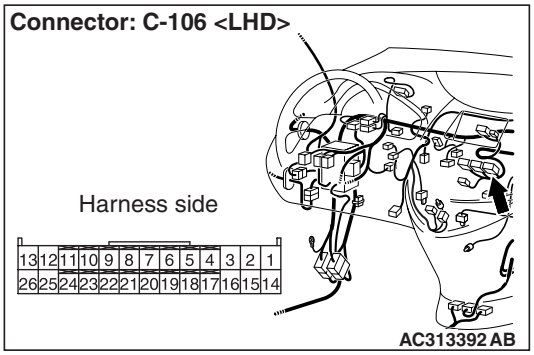

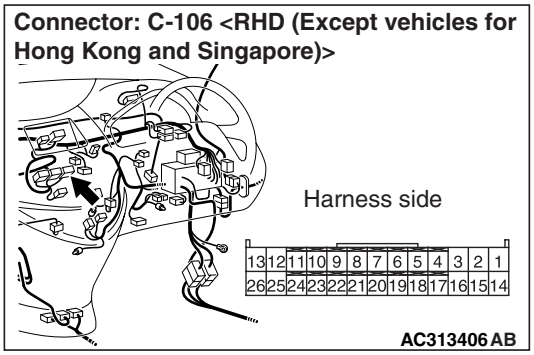

(1) Disconnect the connector, and measure at the wiring harness side.

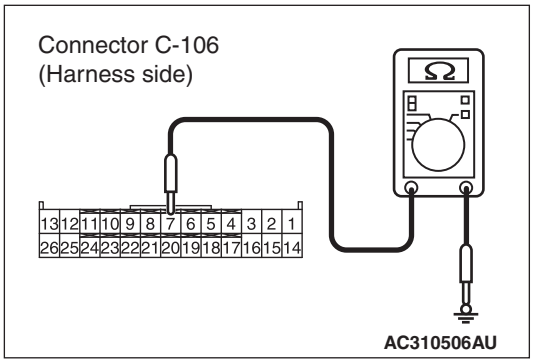

(2) Continuity between terminal 7 and body earth

OK: 2Ω or less

Q: Is the check result normal?

YES : Replace the A/C-ECU.

NO : Go to Step 9.

STEP 9. Check the wiring harness between C-106 A/C-ECU connector terminal No.7 and body earth.

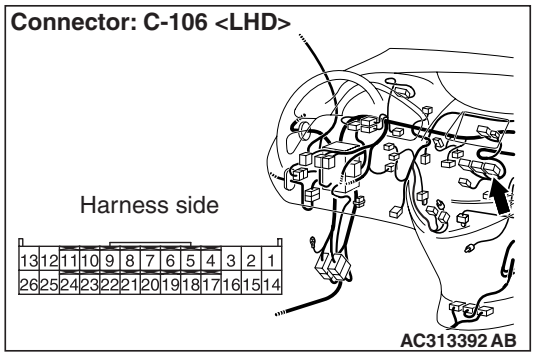

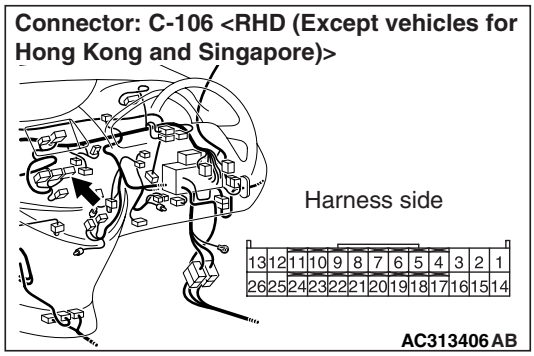

NOTE: Prior to the wiring harness inspection, check earth connector C-49, and repair if necessary.

- Check the A/C-ECU earth line for open circuit.

Q: Is the check result normal?

YES : The trouble can be an intermittent malfunction (Refer to GROUP 00, How to Cope with Intermittent Malfunction P.00-5).

NO : Repair the wiring harness.

Inspection Procedure 29: A/C-ECU power supply system <Vehicles for Hong Kong and Singapore>

A/C-ECU Power Supply Circuit

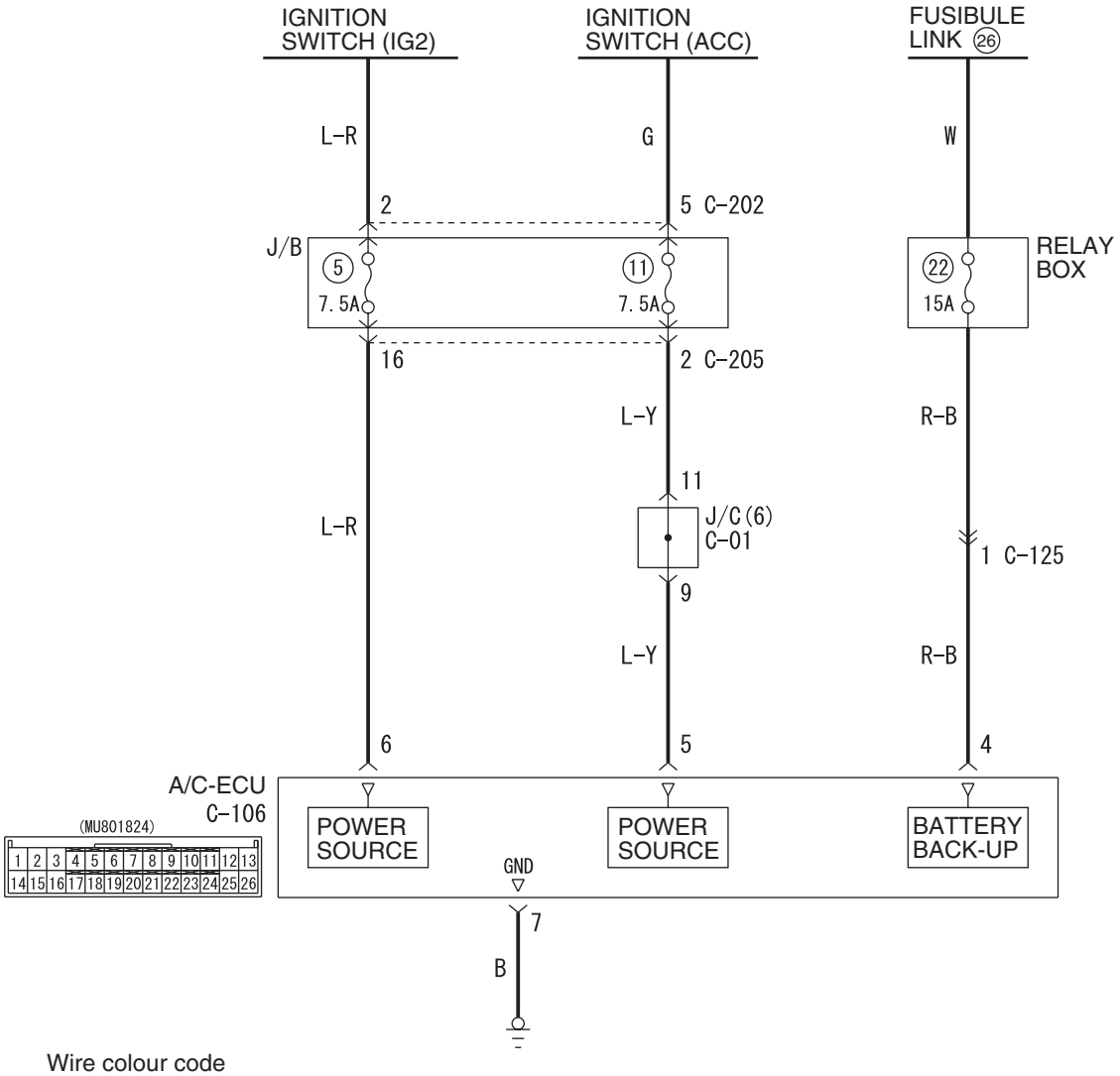

Wire colour code
B : Black LG : Light green G : Green L : Blue W : White Y : Yellow SB : Sky blue
BR : Brown O : Orange GR : Grey R : Red P : Pink V : Violet PU : Purple

W6X55X019A

CIRCUIT OPERATION

If a power supply is not provided to the A/C-ECU, the A/C-ECU power supply system or the earth system may be defective.

PROBABLE CAUSES

- Malfunction of the A/C-ECU
- Damaged harness wires and connectors

Main Index
Group TOC

DIAGNOSIS PROCEDURE

STEP 1. Connector check: C-106 A/C-ECU connector

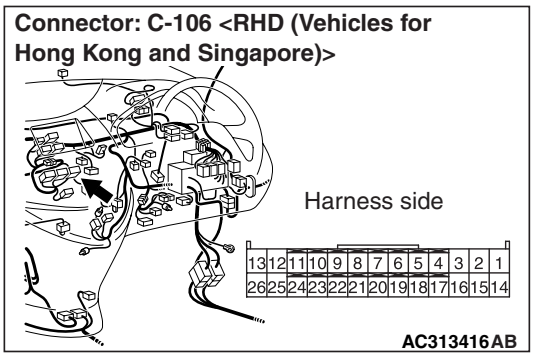

Q: Is the check result normal?
YES : Go to Step 2.
NO : Repair the connector.

STEP 2. Voltage measurement at C-106 A/C-ECU connector.

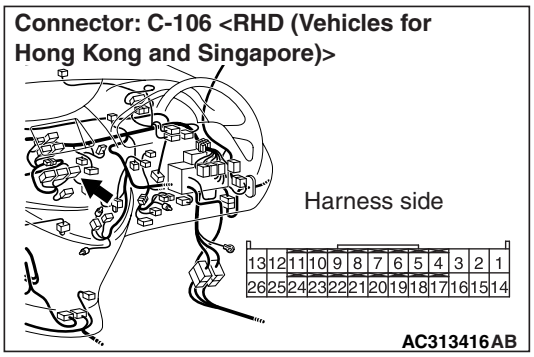

(1) Disconnect the connector, and measure at the wiring harness side.
(2) Turn the ignition switch to the ON position.

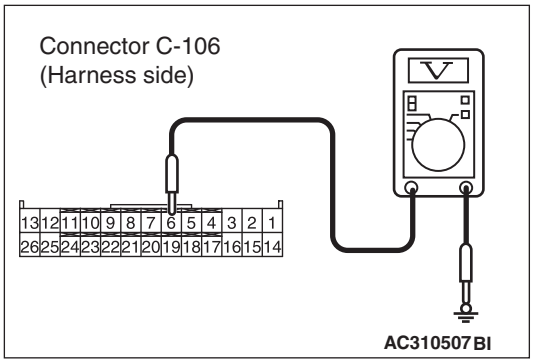

(3) Measure the voltage between terminal 6 and body earth.

OK: System voltage

Q: Is the check result normal?
YES : Go to Step 4.
NO : Go to Step 3.

STEP 3. Check the wiring harness between C-106 A/C-ECU connector terminal No.6 and the ignition switch (IG2).

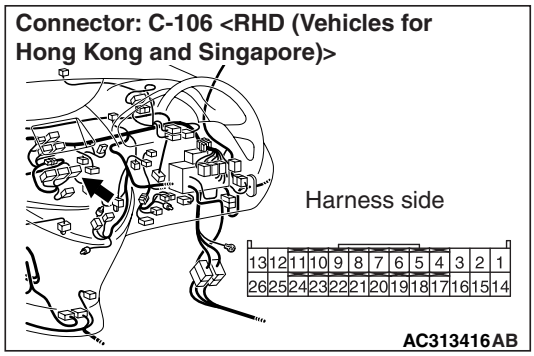

NOTE:

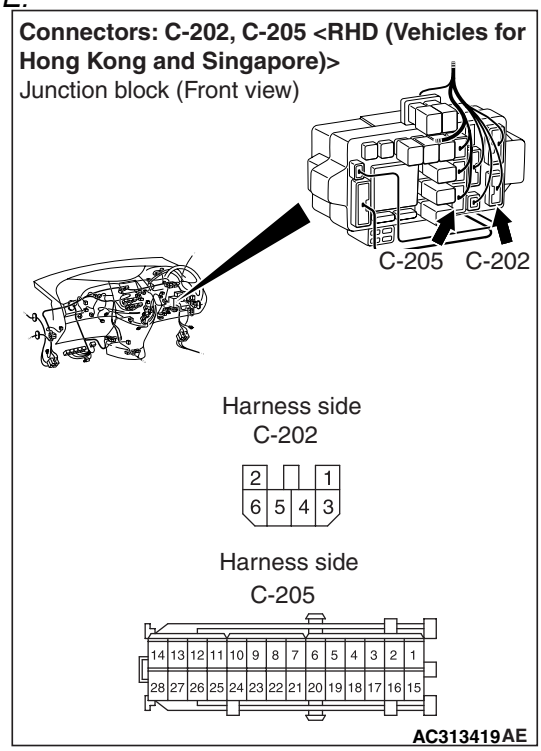

Prior to the wiring harness inspection, check junction block connector C-205 and C-202, and repair if necessary.

- Check the A/C-ECU power supply line for open circuit.

Q: Is the check result normal?
YES : The trouble can be an intermittent malfunction (Refer to GROUP 00, How to Cope with Intermittent Malfunction P.00-5).
NO : Repair the wiring harness.

Main Index
Group TOC

STEP 4. Voltage measurement at C-106 A/C-ECU connector.

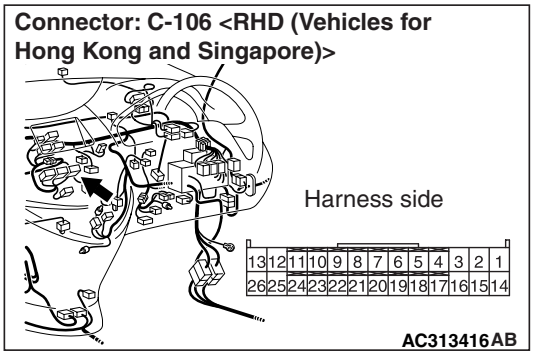

(1) Disconnect the connector, and measure at the wiring harness side.
(2) Turn the ignition switch to the ON position.

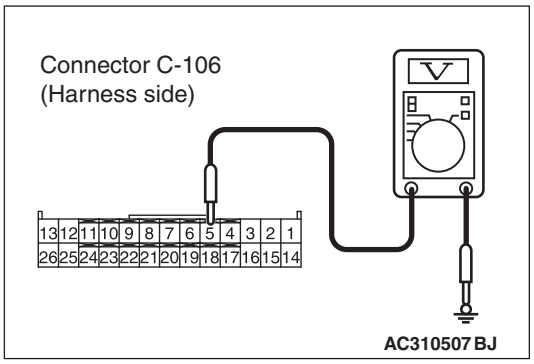

(3) Measure the voltage between terminal 5 and body earth.

OK: System voltage

Q: Is the check result normal?
YES : Go to Step 6.
NO : Go to Step 5.

STEP 5. Check the wiring harness between C-106 A/C-ECU connector terminal No.5 and the ignition switch (ACC).

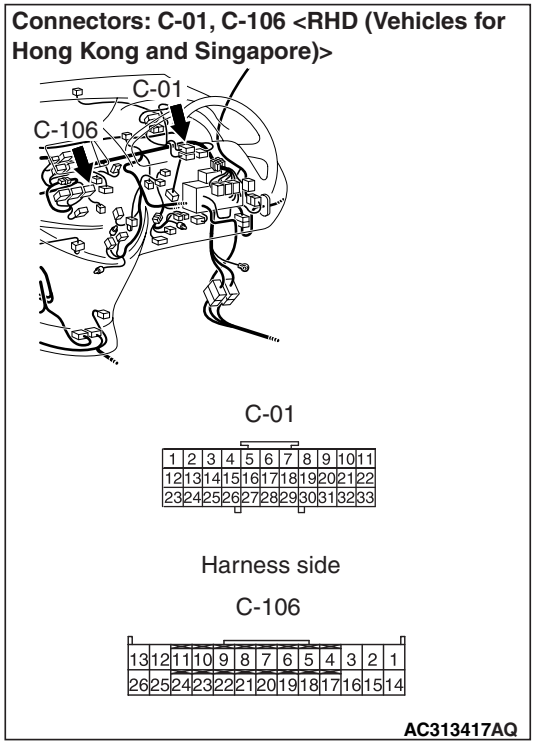

NOTE:

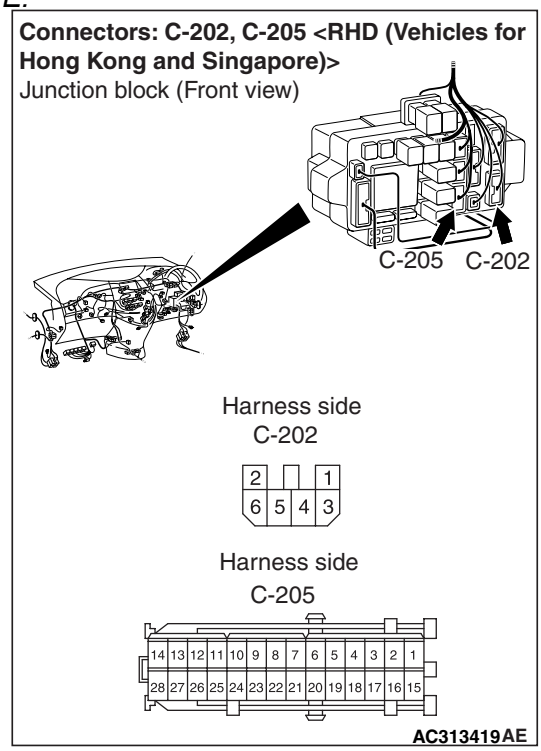

Prior to the wiring harness inspection, check joint connector C-01, junction block connector C-205 and C-202, and repair if necessary.

- Check the A/C-ECU power supply line for open circuit.

Main Index
Group TOC

Q: Is the check result normal?

YES : The trouble can be an intermittent malfunction (Refer to GROUP 00, How to Cope with Intermittent Malfunction P.00-5).

NO : Repair the wiring harness.

STEP 6. Voltage measurement at C-106 A/C-ECU connector.

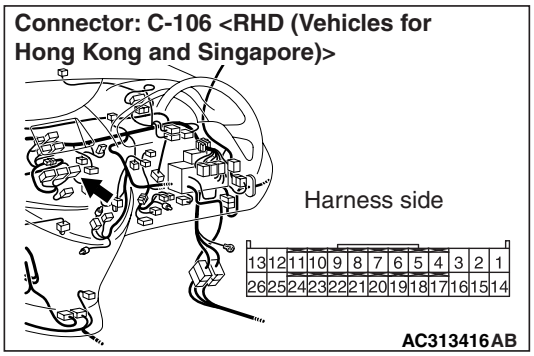

(1) Disconnect the connector, and measure at the wiring harness side.

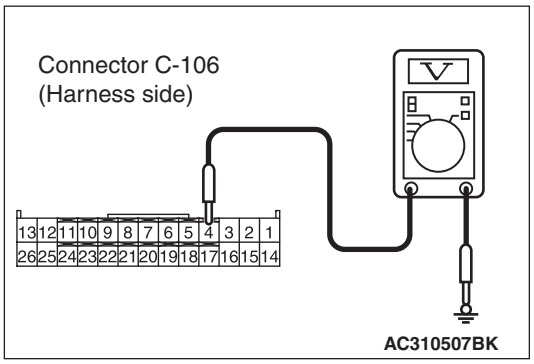

(2) Measure the voltage between terminal 4 and body earth.

OK: System voltage

Q: Is the check result normal?

YES : Go to Step 8.

NO : Go to Step 7.

STEP 7. Check the wiring harness between C-106 A/C-ECU connector terminal No.4 and the fusible link (26).

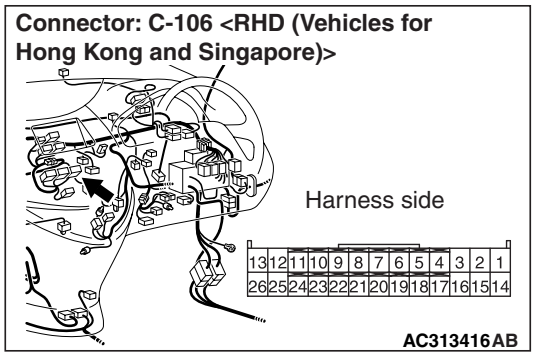

NOTE:

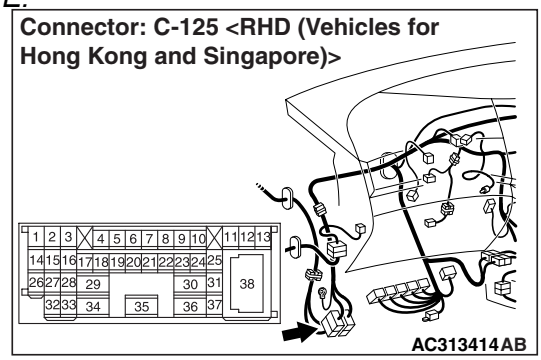

Prior to the wiring harness inspection, check intermediate connector C-125, and repair if necessary.

- Check the rear fan switch power supply line for open circuit.

Q: Is the check result normal?

YES : The trouble can be an intermittent malfunction (Refer to GROUP 00, How to Cope with Intermittent Malfunction P.00-5).

NO : Repair the wiring harness.

Main Index
Group TOC

STEP 8. Resistance measurement at the C-106 front power transistor connector.

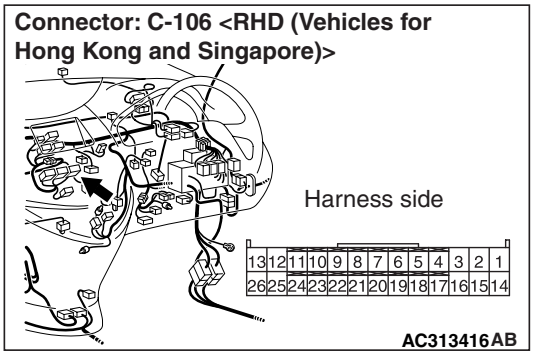

(1) Disconnect the connector, and measure at the wiring harness side.

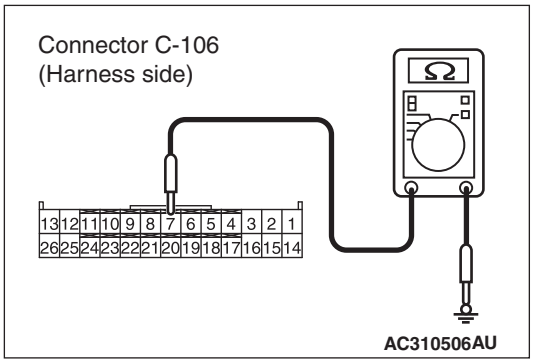

(2) Continuity between terminal 7 and body earth

OK: 2Ω or less

Q: Is the check result normal?

YES : Replace the A/C-ECU.

NO : Go to Step 9.

STEP 9. Check the wiring harness between C-106 A/C-ECU connector terminal No.7 and body earth.

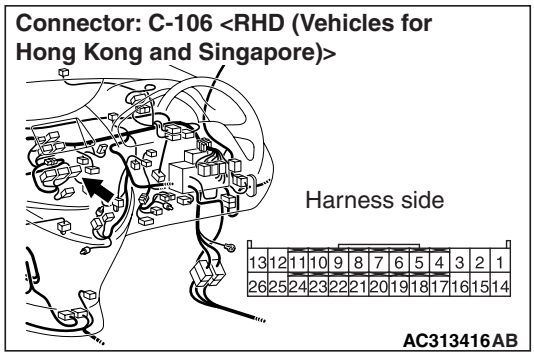

- Check the A/C-ECU earth line for open circuit.

Q: Is the check result normal?

YES : The trouble can be an intermittent malfunction (Refer to GROUP 00, How to Cope with Intermittent Malfunction P.00-5).

NO : Repair the wiring harness.

Main Index
Group TOC

SERVICE DATA REFERENCE TABLE

M1554005100222

Item No.	Check items	Inspection status	The display contents under normal conditions
01	Inside temperature sensor	–	Interior temperature is the same as M.U.T.-III displayed temperature
02	Outside temperature sensor	–	Ambient temperature is the same as M.U.T.-III displayed temperature
03	Air thermo sensor	–	Evaporator outlet temperature is the same as M.U.T.-III displayed temperature
04	Pressure sensor	–	Refrigerant pressure is the same as M.U.T.-III displayed pressure.
05	heater water temperature sensor	–	The coolant temperature is the same as M.U.T.-III displayed temperature
06	Photo sensor	–	The amount of solar radiation is indirectly proportional to M.U.T.-III displayed voltage
10	F. Air mix potentiometer	Front air mix damper position : MAX HOT	Approximately 100%
		Front air mix damper position : MAX COOL	Approximately 0%
11	F. Air mix potentiometer (Target)	–	Display the target value for air mix damper
12	R. Air mix potentiometer <Vehicles with Dual automatic A/C>	Rear air mix damper position : MAX HOT	Approximately 100%
		Rear air mix damper position : MAX COOL	Approximately 0%
13	R. Air mix potentiometer (Target) <Vehicles with Dual automatic A/C>	–	Display the target value for air mix damper
14	F. Air outlet c/o potentiometer	Air outlet changeover damper position: FACE	Opening angle: approximately 100%
		Air outlet changeover damper position: DEF	Opening angle: approximately 0%
15	F. Air outlet c/o potentiometer (Target)	–	Display the target value for air mix damper
16	In/out air damper motor	Outside/inside air selection switch: ON	Inside air
		Outside/inside air selection switch: OFF	Outside air
20	Front blower fan	Air volume control dial: Other than OFF	Display the rotation speed of front blower motor

Main Index
Group TOC

Item No.	Check items	Inspection status	The display contents under normal conditions
21	Front blower fan (Target)	Air volume control dial: Other than OFF <Vehicles with multi-centre display>	Display the target rotation speed of front blower motor
22	Rear blower fan <Vehicles with rear heater , rear cooler or dual automatic A/C>	Rear fan switch: ON	Display the rotation speed of rear blower motor
		Rear air volume adjusting switch : Other than OFF	
23	Rear blower fan (Target) <Vehicles with rear heater , rear cooler or dual automatic A/C>	Rear fan switch: ON	Display the target rotation speed of rear blower motor
		Rear air volume adjusting switch : Other than OFF	
30	Air conditioning switch	Compressor ON	ON
		Compressor OFF	OFF
31	Rear fan SW (Front) <Vehicles with rear heater , rear cooler or dual automatic A/C>	Rear fan switch: ON	ON
		Rear fan switch: OFF	OFF
32	Rear control OFF switch <Vehicles with rear heater , rear cooler or dual automatic A/C>	Rear air volume adjusting switch : OFF	OFF controlled
		Rear air volume adjusting switch : Other than OFF	ON controlled
33	Rear control fan OFF switch<Vehicles with rear heater , rear cooler or dual automatic A/C>	Rear air volume adjusting switch : AUTO	AUTO
		Rear air volume adjusting switch : 1	Lo
		Rear air volume adjusting switch : 2	Me
		Rear air volume adjusting switch : 3	Hi
34	Rear defogger switch	Rear window defogger switch : ON	ON
		Rear window defogger switch : OFF	OFF
35	PTC heater switch <Vehicles with rear heater , rear cooler or dual automatic A/C>	Heater switch ON	ON
		Heater switch OFF	OFF
36	Rear fan SW lamp (Front) <Vehicles with rear heater , rear cooler or dual automatic A/C>	Rear fan switch: ON	ON
		Rear fan switch: OFF	OFF
37	Rear control OFF SW lamp (Front) <Vehicles with rear heater , rear cooler or dual automatic A/C>	Rear fan switch: ON	ON

Main Index
Group TOC

Item No.	Check items	Inspection status	The display contents under normal conditions
38	Rear control OFF SW lamp <Vehicles with rear heater , rear cooler or dual automatic A/C>	Rear air volume adjusting switch : OFF	ALL OFF
		Rear air volume adjusting switch : AUTO	AUTO
		Rear air volume adjusting switch : 1	Lo
		Rear air volume adjusting switch : 2	Me
		Rear air volume adjusting switch : 3	Hi
		–	ALL ON
39	PTC heater lamp <Vehicles with rear heater or dual automatic A/C>	Heater switch ON	ON
		Heater switch OFF	OFF
40	Illuminations power supply	Lighting switch: ON	ON
		Lighting switch: OFF	OFF
41	PTC heater relay <Vehicles with rear heater or dual automatic A/C>	PTC heater relay: ON	ON
		PTC heater relay: OFF	OFF
50	Front Temperature setting	–	Display the temperature control dial position (18.0 - 32.0°C)
51	Rear Temperature setting <Vehicles with rear heater , rear cooler or dual automatic A/C>	–	Display the rear temperature control lever position (20.0 - 30.0°C)
55	Refrigerant leak	Normal refrigerant level	NORMAL
		Checking refrigerant level	Checking
		Defective refrigerant level	Fail
56	Low pressure	Normal refrigerant pressure	NORMAL
		Checking refrigerant pressure	Checking
		Defective refrigerant pressure	Fail

Main Index
Group TOC

ACTUATOR TEST TABLE

M1554005200218

Item No.	Check items	Drive content
01	Front blower fan: OFF	Stop
02	Front blower fan: Middle	Middle speed
03	Front blower fan: High	High speed
04	Rear blower fan: OFF <Vehicles with rear heater, rear cooler or dual automatic A/C>	Stop
05	Rear blower fan: AUTO <Vehicles with rear heater, rear cooler or dual automatic A/C>	AUTO
06	Rear blower fan: Lo <Vehicles with rear heater, rear cooler or dual automatic A/C>	Low speed
07	Rear blower fan: Middle <Vehicles with rear heater, rear cooler or dual automatic A/C>	Middle speed
08	Rear blower fan: High <Vehicles with rear heater, rear cooler or dual automatic A/C>	High speed
09	Condenser fan: OFF	Stop
0A	Condenser fan: 50%	Middle speed
0B	Condenser fan: 100%	High speed
10	F.Air mix dumper motor: 0%	Opening angle: Approximately 0% (MAX COOL)
11	F.Air mix dumper motor: 50%	Opening angle: Approximately 50%
12	F.Air mix dumper motor: 100%	Open angle: Approximately 100% (MAX COOL)
13	R.Air mix dumper motor: 0% <Vehicles with rear heater, rear cooler or dual automatic A/C>	Opening angle: Approximately 0% (MAX COOL)
14	R.Air mix dumper motor: 50% <Vehicles with rear heater, rear cooler or dual automatic A/C>	Opening angle: Approximately 50%
15	R.Air mix dumper motor: 100% <Vehicles with rear heater, rear cooler or dual automatic A/C>	Open angle: Approximately 100% (MAX COOL)
20	Air outlet c/o dumper: FACE	Air outlet at FACE position
21	Air outlet c/o dumper: Bi-Level	Air outlet at FACE/FOOT position
22	Air outlet c/o dumper: FOOT	Air outlet at FOOT position
23	Air outlet c/o dumper: DEF/FOOT	Air outlet at DEF/FOOT position
24	Air outlet c/o dumper: DEF	Air outlet at DEF position
30	In/out changeover dumper: Recirc	Moved to recirculation-side
31	In/out changeover dumper: Fresh	Moved to outside air-side
40	Rear defogger switch: OFF	Rear window defogger OFF
41	Rear defogger switch: ON	Rear window defogger ON
42	PTC heater relay: OFF <Vehicles with rear heater or dual automatic A/C>	PTC heater OFF
43	PTC heater relay: ON <Vehicles with rear heater or dual automatic A/C>	PTC heater ON (air outlet at FACE or DEF position, not operate with blower OFF)

Main Index
Group TOC

Item No.	Check items	Drive content
50	Idle up request: OFF	Idle rpm (not operate with compressor ON)
51	Idle up request: low load	Idle up with low load rpm
52	Idle up request: high lode	Idle up with high load rpm

CHECK AT A/C-ECU TERMINALS

M1552010300710

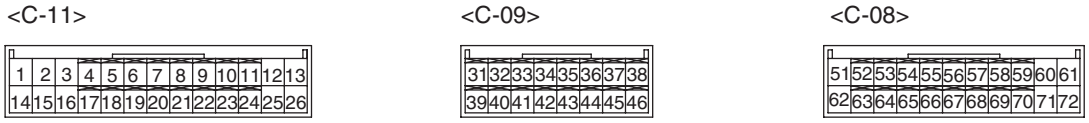

AC303234AB

Terminal No.	Check items	Check conditions	Normal conditions
1	Sensor earth	Always	0 V
2	Front power transistor (DRAIN)	Air volume control dial: Maximum air volume (Preset temperature 18°C)	0 – 2 V
3	Front power transistor (GATE)	Air volume control dial: Maximum air volume (Preset temperature 18°C)	System voltage
4	Back-up power supply	Always	System voltage
5	ACC power supply	Ignition switch: ACC	System voltage
6	IG2 power supply	Ignition switch: IG2	System voltage
7	Earth	Always	0 V
8~10	–	–	–
11	Compressor relay input	Compressor relay: ON	System voltage
12	Rear window defogger relay	Rear window defogger relay : ON	0 – 1 V
13	PTC heater switch indicator <Vehicles with rear heater or dual automatic A/C>	PTC heater switch: ON	0 – 1 V
		PTC switch: OFF	0 V
14	Sensor power supply:	Ignition switch: IG2	5 V
15	Rear temperature control lever <Vehicles with dual automatic A/C>	Rear temperature control lever MAX HOT position	0 V
16, 17	–	–	–
18	Interior temperature sensor	Sensor probe temperature: 25°C (4kΩ)	2.1 – 2.7 V
19	Air thermo sensor	Sensor probe temperature: 25°C (4kΩ)	2.1 – 2.7 V
20	Front air mix damper motor (Potentiometer input)	Front air mix damper motor MAX HOT position	1.2 – 1.6 V
21	Air outlet changeover damper motor (Potentiometer input)	DEF position	0.5 – 0.8 V

Main Index
Group TOC

Terminal No.	Check items	Check conditions	Normal conditions
22	Rear air mix damper motor (Potentiometer input) <Vehicles with dual automatic A/C>	Rear air mix damper motor MAX HOT position	0.8 – 1.2 V
23	Solar sensor input	Brightness 0 lux	5 V
		Brightness 100000 lux or more	0 V
24	Ambient temperature sensor	Sensor probe temperature 25°C (1.5k Ω)	2.1 – 2.7 V
25	A/C pressure sensor input	Refer to P.55-208	Refer to P.55-208
26	Heat switch <Vehicles with dual automatic A/C>	Ignition switch: IG2 Heater switch ON	System voltage
31	Front air mix damper motor (COOL)	When the front air conditioner is moved to the COOL position	System voltage
		When the front air conditioner is moved to the HOT position	0 – 1 V
32	Front air mix damper motor (HOT)	When the front air conditioner is moved to the HOT position	System voltage
		When the front air conditioner is moved to the COOL position	0 – 1 V
33	Air outlet changeover damper motor (FACE)	When moving toward FACE position	System voltage
		When moving toward DEF position	0 – 1 V
34	Air outlet changeover damper motor (DEF)	When moving toward DEF position	System voltage
		When moving toward FACE position	0 – 1 V
35	Rear air mix damper motor (COOL) <Vehicles with dual automatic A/C>	When the rear air conditioner is moved to the COOL position	System voltage
		When the rear air conditioner is moved to the HOT position	0 – 1 V
36	Rear air mix damper motor (HOT) <Vehicles with dual automatic A/C>	When the rear air conditioner is moved to the HOT position	System voltage
		When the rear air conditioner is moved to the COOL position	0 – 1 V
37	Outside/inside air selection damper motor (Fresh air position)	When setting the Fresh air position	0 – 1 V
		When setting the air recirculation position	System voltage
38	Outside/inside air selection damper motor (Air recirculation position)	When moving to air recirculation position	0 – 1 V
		When moving to fresh air position	System voltage
35~42	–	–	–
43	ILL power supply	Lighting switch: ON	System voltage
44	ILL earth	Always	0 V
45	Front blower relay	Ignition switch: IG2	0 – 1 V

Main Index
Group TOC

Terminal No.	Check items	Check conditions	Normal conditions
46	PTC heater relay <Vehicles with dual automatic A/C>	PTC heater : ON	0 – 1 V
		PTC heater : OFF	System voltage
51	Rear temperature control lever indicator <Vehicles with dual automatic A/C>	Rear air volume adjusting switch : OFF	System voltage
		Rear air volume adjusting switch : Other than OFF	0 – 1 V
52	Rear air conditioner switch indicator (AUTO) <Vehicles with dual automatic A/C>	Rear air volume adjusting switch : AUTO	0 – 1 V
53	Rear air conditioner switch indicator (Lo) <Vehicles with rear heater, rear cooler or dual automatic A/C>	Rear air volume adjusting switch : 1	0 – 1 V
54	Rear air conditioner switch indicator (Me) <Vehicles with rear heater, rear cooler or dual automatic A/C>	Rear air volume adjusting switch : 2	0 – 1 V
55	Rear air conditioner switch indicator (Hi) <Vehicles with rear heater, rear cooler or dual automatic A/C>	Rear air volume adjusting switch : 3	0 – 1 V
56	Rear blower relay	Ignition switch: ON	0 – 1 V
57	–	–	–
58	Rear fan switch indicator <Vehicles with rear heater, rear cooler or dual automatic A/C>	Rear fan switch: Other than OFF	0 V
59	Rear power transistor (DRAIN)	Rear air volume adjusting switch : 3 (Preset temperature 20°C)	0 – 2 V
60	Rear power transistor (GATE)	Rear air volume adjusting switch : 3 (Preset temperature 20°C)	System voltage
61–64	–	–	–
65	Rear air conditioner switch (Shielded wire) <Vehicles with rear heater, rear cooler or dual automatic A/C>	Always	0 V
66	Rear air conditioner switch (Hi) <Vehicles with rear heater, rear cooler or dual automatic A/C>	Rear air volume adjusting switch : 3	Approximately 5 V
67	Rear air conditioner switch (Me) <Vehicles with rear heater, rear cooler or dual automatic A/C>	Rear air volume adjusting switch : 2	Approximately 5 V

Main Index
Group TOC

Terminal No.	Check items	Check conditions	Normal conditions
68	Rear air conditioner switch (Lo) <Vehicles with rear heater, rear cooler or dual automatic A/C>	Rear air volume adjusting switch : 1	Approximately 5 V
69	Rear air conditioner switch (AUTO) <Vehicles with dual automatic A/C>	Rear air volume adjusting switch : AUTO	Approximately 5 V
70	Rear air conditioner switch (OFF) <Vehicles with rear heater, rear cooler or dual automatic A/C>	Rear air volume adjusting switch : OFF	Approximately 5 V
71	Rear fan switch input	Rear fan switch: ON (switch pushed) Ignition switch: IG2	System voltage
72	Rear air conditioner switch indicator power supply	Rear air volume adjusting switch : Other than OFF	System voltage

Main Index
Group TOC

ON-VEHICLE SERVICE

COMPRESSOR DRIVE BELT ADJUSTMENT

M1552001000465

Refer to GROUP 11A, On-vehicle Service – Drive Belt Tension Check P.11A-8.

CHARGING AND DISCHARGING

M1552022200011

Use the refrigerant recovery unit to discharge refrigerant gas front the system.

NOTE: Refer to the Refrigerant Recovery and Recycling Unit instruction Manual for operation of the unit.

CHECK THE REFRIGERANT LEVEL

M1552021700035

Remove the refrigerant by the flon reclaim machine and replenish the specified quantity of refrigerant.

NOTE: Refer to the Refrigerant Recovery and Recycling Unit instruction Manual for operation of the unit.

PERFORMANCE TEST

M1552001400504

1. The vehicles to be tested should be in a place that is not in direct sunlight.

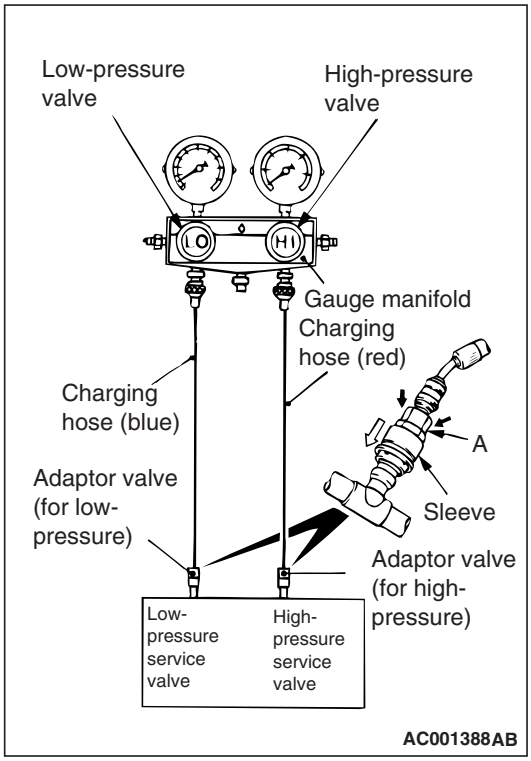

2. Close the high and low-pressure valve of the gauge manifold.
3. Connect the charging hose (blue) to the low-pressure valve and connect the charging hose (red) to the high-pressure valve of the gauge manifold.

⚠ CAUTION

- **To connect the quick joint, press section A firmly against the service valve until a click is heard.**
- **When connecting, run your hand along the hose while pressing to ensure that there are no bends in the hose.**

4. Install the quick joint (for low-pressure) to the charging hose (blue), and connect the quick joint (for high-pressure) to the charging hose (red).

   NOTE: The high-pressure service valve is on the A/C pipe and the low-pressure service valve is on the suction hose.
5. Connect the quick joint (for low-pressure) to the low-pressure service valve and connect the quick joint (for high-pressure) to the high-pressure service valve.
6. Start the engine.
7. Set the A/C controls as follows:

When the front A/C test

- A/C switch: A/C – ON position
- Mode selection: FACE position
- Temperature control: MAXIMUM COOLING position
- Air selection: RECIRCULATION position
- Blower switch:Fast position

When the rear A/C test

- The front A/C should be set as above
- A/C switch: A/C ON position
- Temperature control: MAXIMUM COOLING position
- Blower switch:Fast position

8. Adjust engine speed to 1,500 r/min with A/C clutch engaged.
9. Engine should be warmed up with doors and windows opened.

Main Index
Group TOC

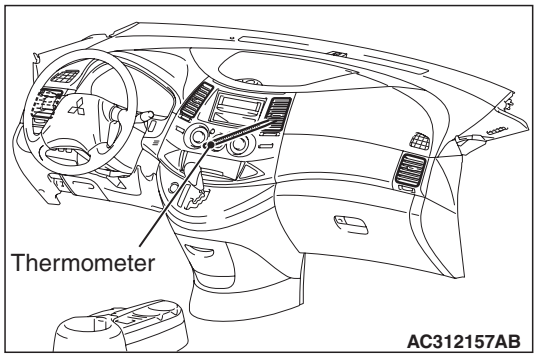

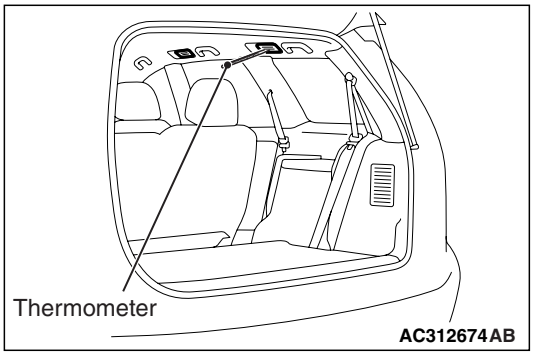

10. Insert a thermometer in the centre air outlet and operate the engine for 20 minutes.

NOTE: If the clutch cycles, take the reading before the clutch disengages.

11. Note the discharge air temperature.

PERFORMANCE TEMPERATURE CHART

REAR-A/C TEST

Garage ambient temperature °C	**20**	**25**	**30**	**35**
Discharge air temperature °C	3.5 – 5.5	3.5 – 5.5	4.5 – 6.5	5.5 – 7.5
Compressor high pressure kPa	1, 050 – 1, 250	1, 050 – 1, 250	1,400 – 1,600	1,650 – 1,850
Compressor low pressure kPa	120 – 140	120 – 140	130 – 150	160 – 180

FRONT-A/C TEST

Garage ambient temperature °C	**20**	**25**	**30**	**35**
Discharge air temperature °C	5.5 – 7.5	5.5 – 7.5	6.5 – 8.5	7.5 – 9.5
Compressor high pressure kPa	1, 150 – 1, 350	1, 150 – 1,350	1,500 – 1,700	1,750 – 1,950
Compressor low pressure kPa	130 – 150	130 – 150	140 – 160	180 – 200

Main Index
Group TOC

SIMPLE INSPECTION OF THE A/C PRESSURE SENSOR

M1552014700196

1. Assemble a gauge manifold on the high pressure service valve.

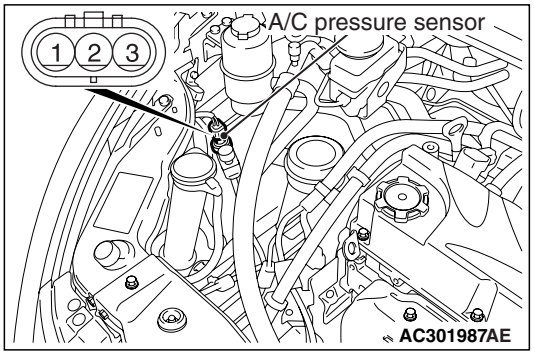

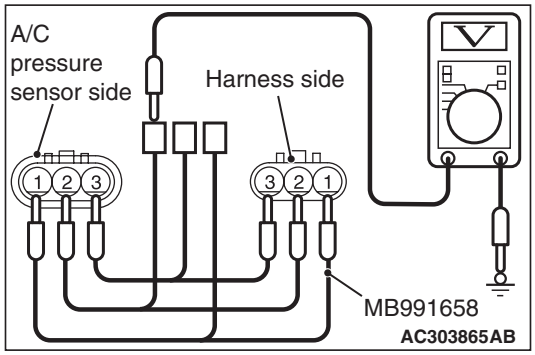

2. Disconnect the A/C pressure sensor connector and connect the special tool test harness (MB991658) as shown.
3. Start the engine and then turn ON the air conditioner switch.

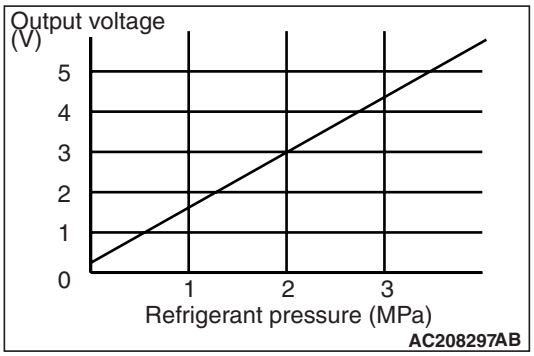

4. At this time, check to see that the voltage of the A/C pressure sensor connector terminal No. 2 reflects the specifications of the figure.

   NOTE: The allowance shall be defined as ±5%.

RELAY CONTINUITY CHECK

M1552008800473

A/C COMPRESSOR RELAY CONTINUITY CHECK

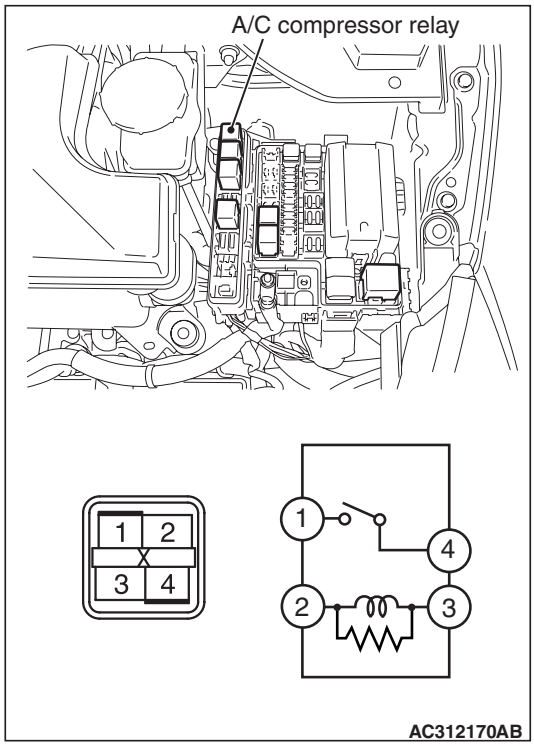

Battery voltage	Tester connection	Specified condition
Not applied	4 – 5	Open circuit
• Connect terminal 3 to the positive battery terminal • Connect terminal 1 to the negative battery terminal	4 – 5	Less than 2 ohms

Main Index
Group TOC

REAR BLOWER RELAY CONTINUITY CHECK

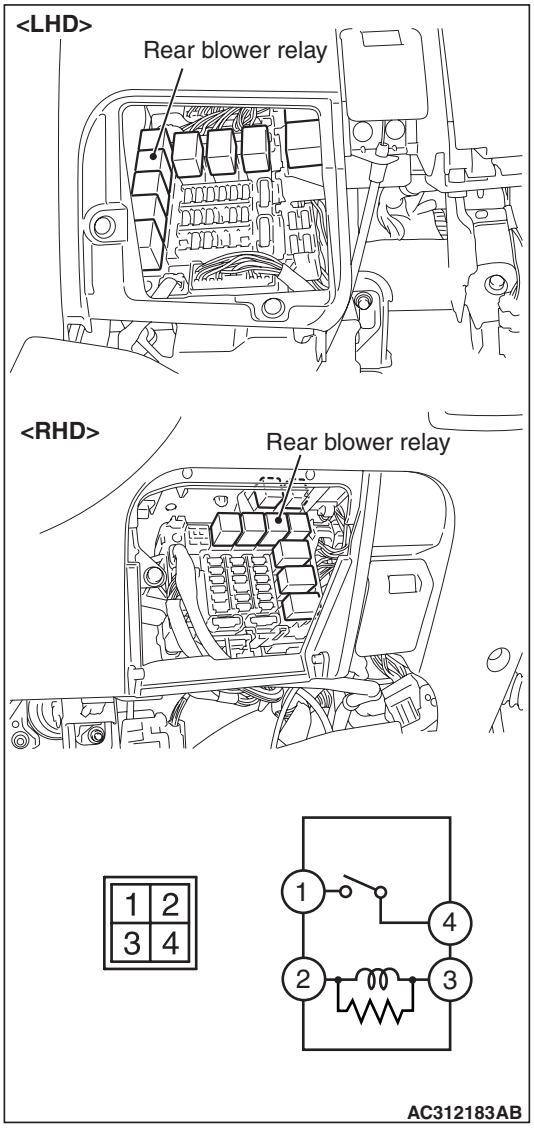

Battery voltage	Tester connection	Specified condition
Not applied	1 – 4	Open circuit
• Connect terminal 3 to the positive battery terminal • Connect terminal 2 to the negative battery terminal	1 – 4	Less than 2 ohms

FRONT BLOWER LELAY CONTINUITY CHECK

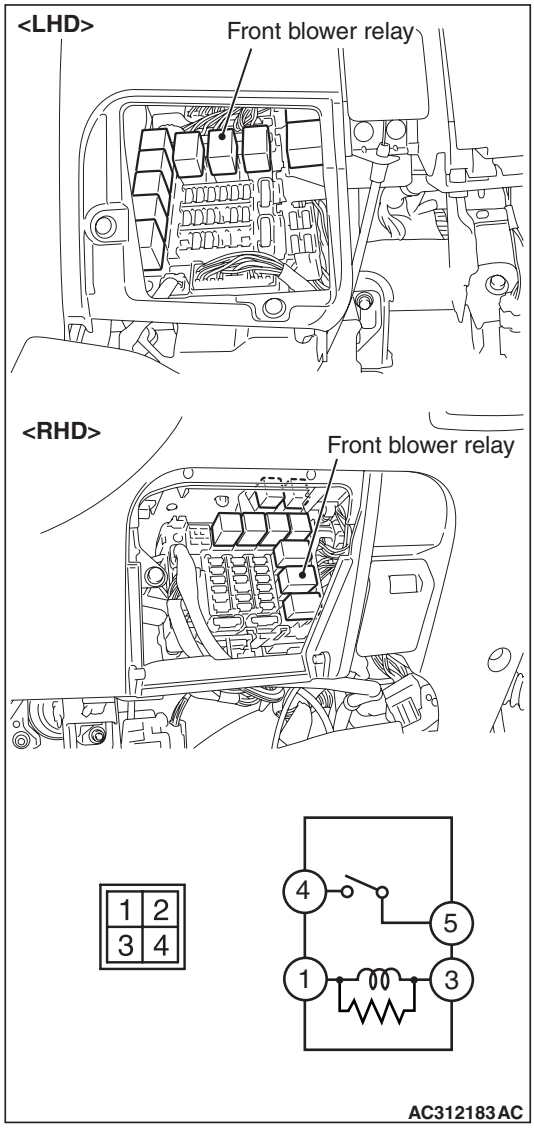

Battery voltage	Tester connection	Specified condition
Not applied	4 – 5	Open circuit
• Connect terminal 3 to the positive battery terminal • Connect terminal 1 to the negative battery terminal	4 – 5	Less than 2 ohms

Main Index
Group TOC

PTC HEATER RELAY 1 CONTINUITY CHECK

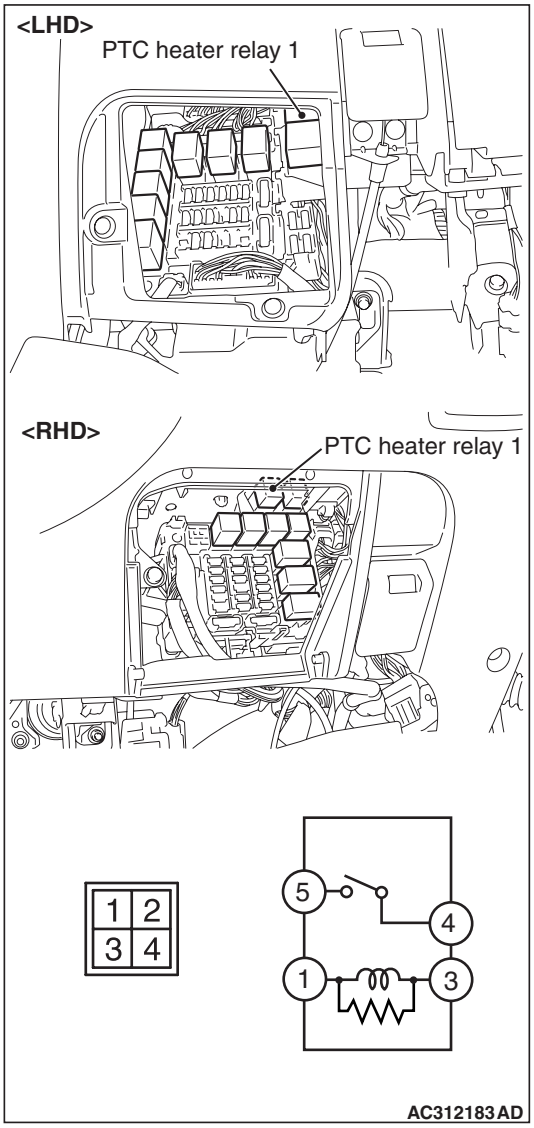

Battery voltage	Tester connection	Specified condition
Not applied	4 – 5	Open circuit
• Connect terminal 3 to the positive battery terminal • Connect terminal 1 to the negative battery terminal	4 – 5	Less than 2 ohms

PTC HEATER RELAY 2 CONTINUITY CHECK

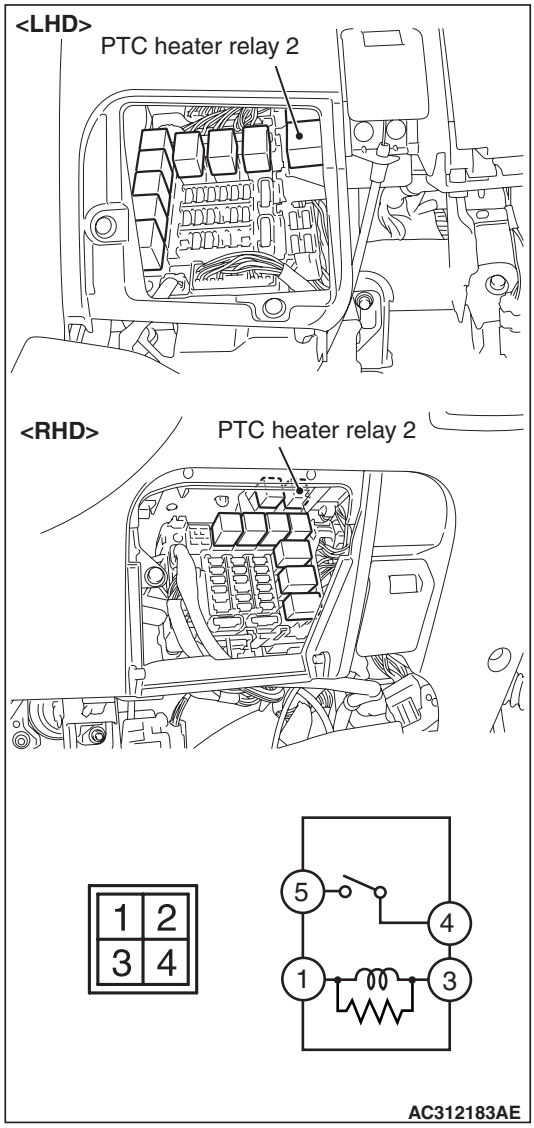

Battery voltage	Tester connection	Specified condition
Not applied	4 – 5	Open circuit
• Connect terminal 3 to the positive battery terminal • Connect terminal 1 to the negative battery terminal	4 – 5	Less than 2 ohms

Main Index
Group TOC

IDLE-UP OPERATION CHECK

M1552001600508

1. Before inspection and adjustment, set vehicle in the following condition:
   - Engine coolant temperature: 80 – 90 °C
   - Lamps, electric cooling fan and accessories: Set to OFF
   - Transmission: Neutral ("N" or "P" for vehicles with A/T)
   - Steering wheel: Straightforward
2. Check whether or not the idle speed is the standard value.

   Refer to GROUP 11A, On-vehicle Service – Basic Idle Speed Adjustment P.11A-12.

   Standard value: 750 ± 50 r/min
3. When the A/C is running after turning the A/C switch to ON, and the blower switch to the 3(MH) or 4(HI) position, check to be sure that the idle speed is at the standard value.

   Standard value: 850 ± 50 r/min

   NOTE: It is not necessary to make an adjustment, because the idling speed is automatically adjusted by the ISC system. If, however, a deviation from the standard value occurs for some reason, check the ISC system.

CLEAN AIR FILTER REPLACEMENT PROCEDURE

M1552020600046

1. Remove the glove box. (Refer to GROUP 52A, Instrument Panel P.52A-2.)

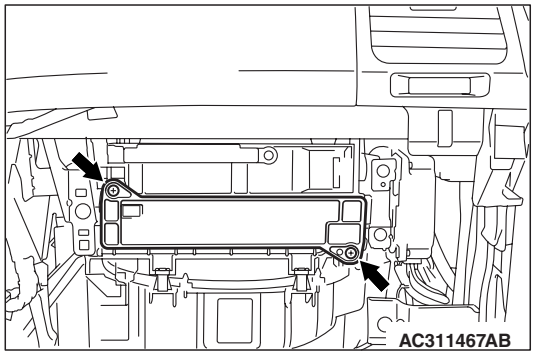

2. Remove the two screws as shown, and replace the clean air filter.
3. Install the glove box.

Main Index
Group TOC

HEATER CONTROL UNIT

REMOVAL AND INSTALLATION

M1554014700073

Pre-removal and Post-installation Operation
- Instrument centre panel Removal and Installation (Refer to GROUP 52A, Instrument Panel P.52A-2.)

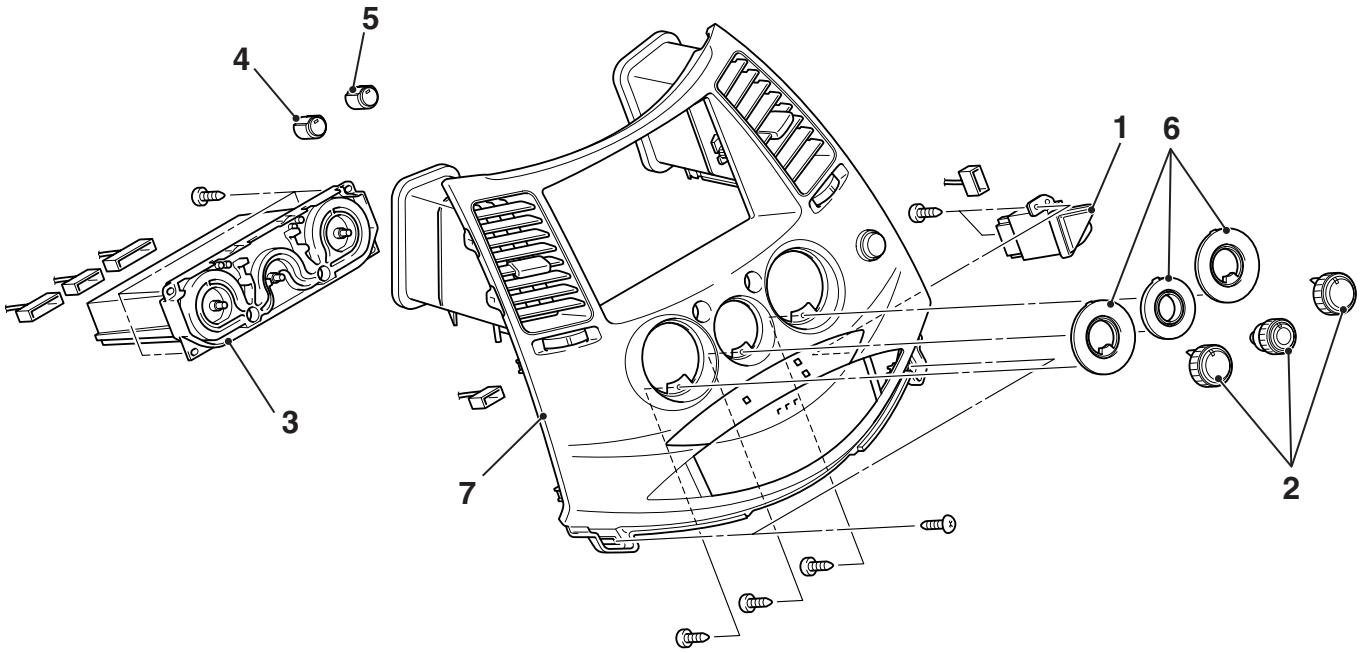

AC302034AB

Removal steps
1. Rear fun switch
2. Heater control lever knob
3. Automatic air conditioner control panel (A/C-ECU)
4. Rear window defogger switch knob

Removal steps (Continued)
5. outside/inside air selection switch knob
6. Panel
7. Instrument centre panel

INSPECTION

M1552014301629

REAR FAN SWITCH CONTINUITY CHECK

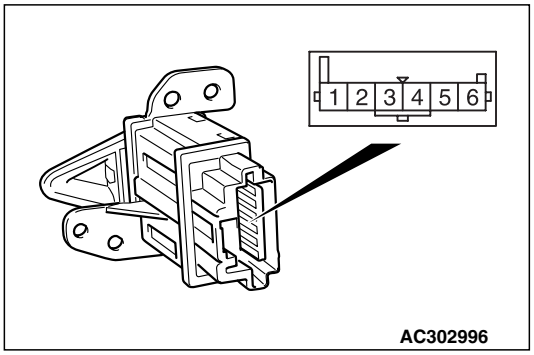

AC302996

Switch position	Tester connection	Specified condition
OFF	1 – 2	Open circuit
ON		Less than 2 ohms

Main Index
Group TOC

HEATER UNIT AND BLOWER ASSEMBLY

REMOVAL AND INSTALLATION

M1552020800125

⚠ WARNING

- ***Never attempt to disassemble or repair the SRS-ECU. If faulty, replace it.***
- ***Do not drop or subject the SRS-ECU to impact or vibration. If denting, cracking, deformation, or rust are discovered in the SRS-ECU, replace it with a new front impact sensor. Discard the old one.***
- ***After deployment of an air bag, replace the SRS-ECU with a new one.***
- ***Never use an ohmmeter on or near the SRS-ECU, and use only the special test equipment described on P.52B-11.***

Pre-removal Operation	Post-installation Operation
• Engine coolant Draining (Refer to P.14-18.) • Refrigerant draining (Refer to P.55-206.) • Air cleaner Removal (Refer to GROUP 15, Air Cleaner P.15-3.) • Front seat assembly Removal (Refer to GROUP 52A, Front Seat Assembly P.52A-21.) • Rear heater duct Removal (Refer to P.55-248.) • Instrument panel Removal (Refer to GROUP 52A, Instrument Panel P.52A-2.) • SRS-ECU Removal (Refer to GROUP 52B, SRS Control Unit P.52B-332 <Except vehicles for Hong Kong and Singapore> or P.52B-332 <Vehicles for Hong Kong and Singapore>.)	• Adjust the front air mix damper control motor. (Refer to P.55-221.) • SRS-ECU Installation (Refer to GROUP 52B, SRS Control Unit P.52B-332 <Except vehicles for Hong Kong and Singapore> or P.52B-332 <Vehicles for Hong Kong and Singapore>.) • Instrument panel Installation (Refer to GROUP 52A, Instrument Panel P.52A-2.) • Rear heater duct Removal (Refer to Duct P.55-248.) • Front seat assembly Installation (Refer to GROUP 52A, Front Seat Assembly P.52A-21.) • Air cleaner Installation (Refer to GROUP 15, Air Cleaner P.15-3.) • Engine coolant Refilling (Refer to P.14-18.) • Refrigerant Refilling (Refer to P.55-206.)

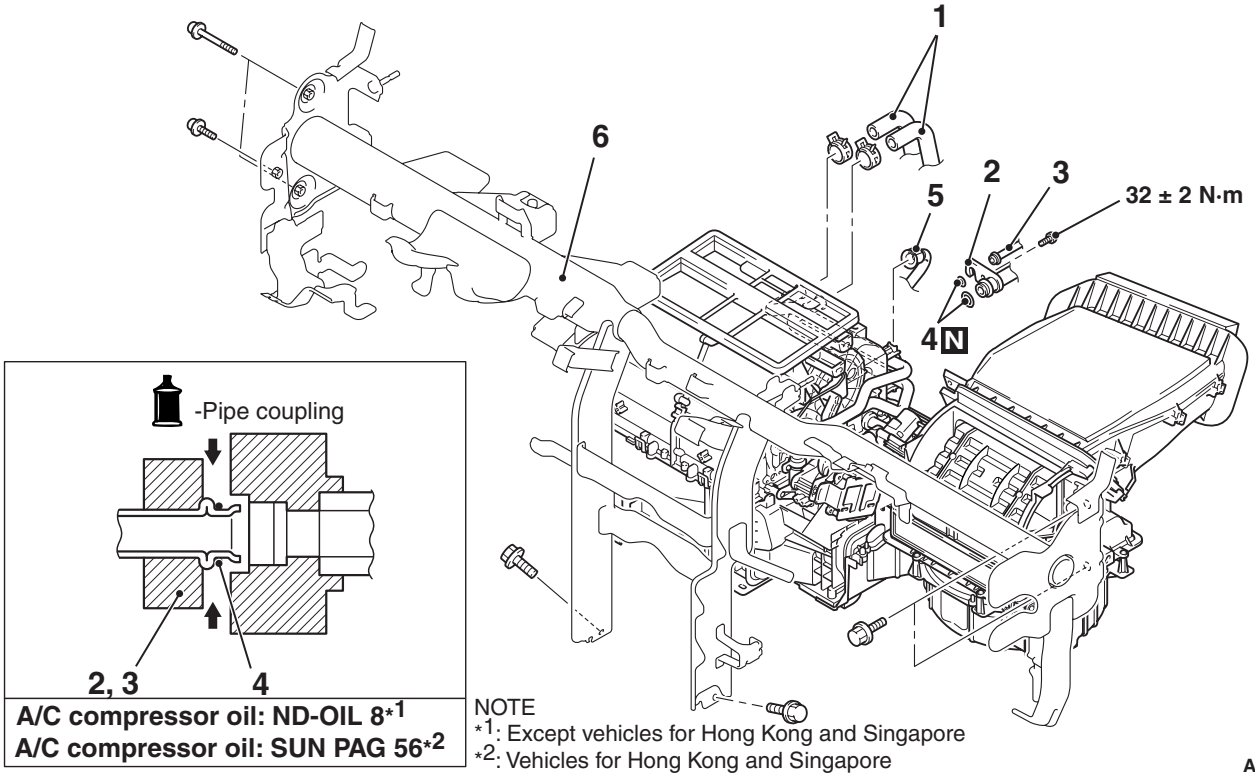

NOTE
*1: Except vehicles for Hong Kong and Singapore
*2: Vehicles for Hong Kong and Singapore

AC310129AE

Main Index
Group TOC

Removal steps

<<**A**>>

- Harness and clamp
- Junction block installation

1. Heater hose

- Canister installation

<<**B**>>

2. Suction pipe

Removal steps (Continued)

<<**B**>>

3. Liquid pipe B
4. O-ring
5. Drain hose
6. Front deck cross member heater unit assembly

Main Index
Group TOC

REMOVAL SERVICE POINTS

<<A>> CONNECTOR DISCONNECTION

Disconnect the following connectors to remove the front deck crossmember and the heater unit assembly.

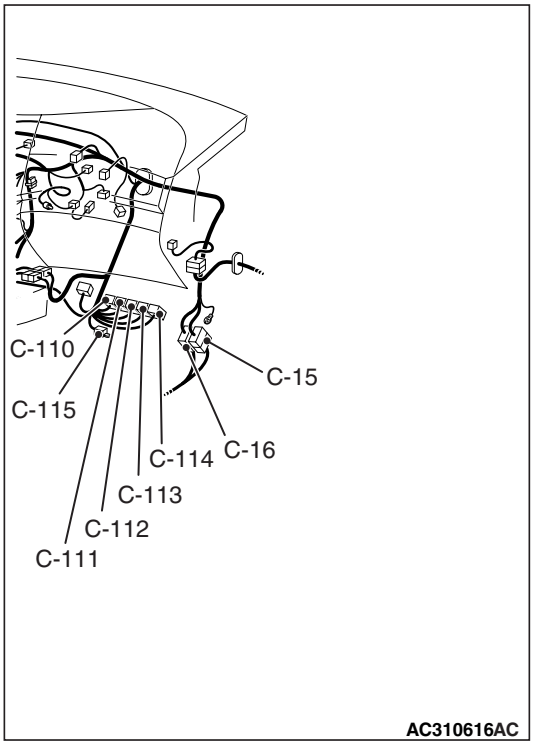

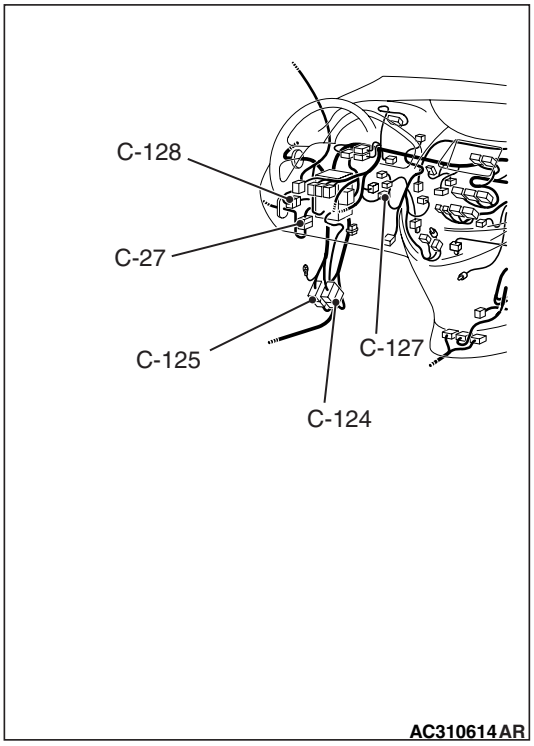

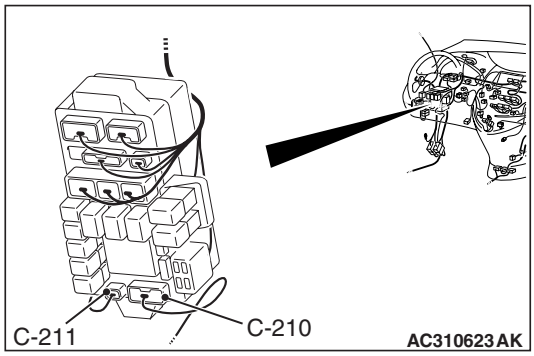

<L.H.D.>

Connector number	Connector name
C-15	Instrument panel wiring harness and floor wiring harness combination
C-16	Instrument panel wiring harness and floor wiring harness combination
C-27	Instrument panel wiring harness and front door wiring harness (LH) combination
C-110	Engine-ECU <M/T> or Engine-A/T-ECU <A/T>
C-111	Engine-ECU <M/T> or Engine-A/T-ECU <A/T>
C-112	Engine-ECU <M/T> or Engine-A/T-ECU <A/T>
C-113	Engine-ECU <M/T> or Engine-A/T-ECU <A/T>
C-114	Engine-ECU <M/T> or Engine-A/T-ECU <A/T>
C-115	Earth
C-124	Instrument panel wiring harness and front wiring harness combination
C-125	Instrument panel wiring harness and front wiring harness combination
C-127	Stop lamp switch
C-128	Instrument panel wiring harness and roof wiring harness combination
C-210	Floor wiring harness and J/B combination
C-211	Roof wiring harness and J/B combination

Main Index
Group TOC

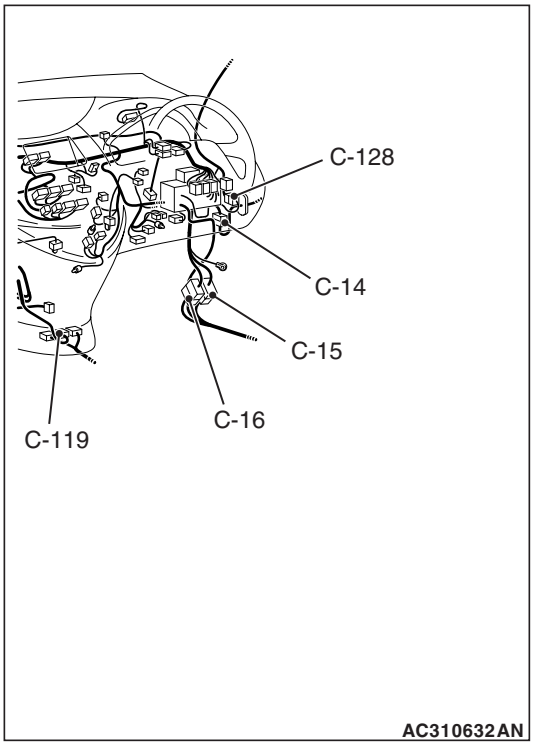

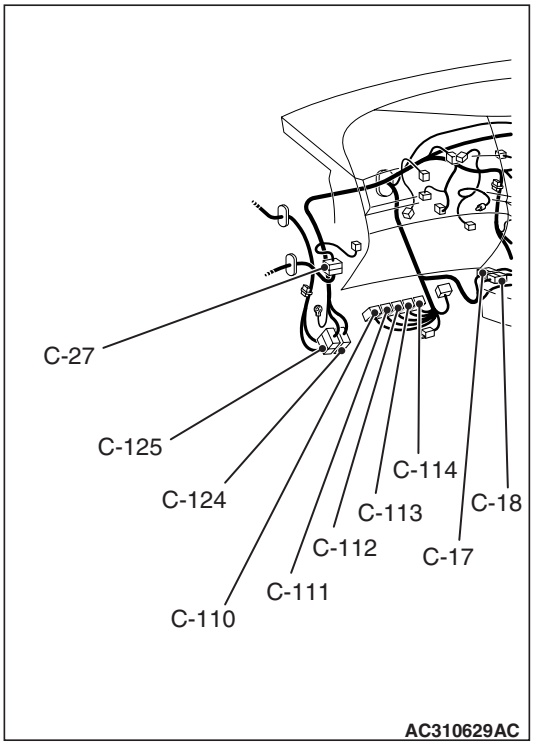

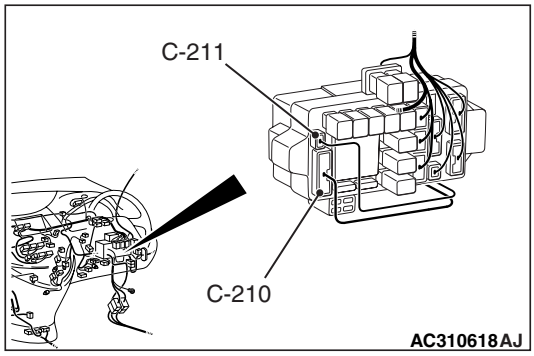

<R.H.D.>

Connector number	Connector name
C-14	Instrument panel wiring harness and front door wiring harness (RH) combination
C-15	Instrument panel wiring harness and floor wiring harness combination
C-16	Instrument panel wiring harness and floor wiring harness combination
C-17	Instrument panel wiring harness and control wiring harness combination
C-18	Instrument panel wiring harness and control wiring harness combination
C-27	Instrument panel wiring harness and front door wiring harness (LH) combination
C-110	Engine-ECU <M/T> or Engine-A/T-ECU <A/T>
C-111	Engine-ECU <M/T> or Engine-A/T-ECU <A/T>
C-112	Engine-ECU <M/T> or Engine-A/T-ECU <A/T>
C-113	Engine-ECU <M/T> or Engine-A/T-ECU <A/T>
C-114	Engine-ECU <M/T> or Engine-A/T-ECU <A/T>
C-119	SRS-ECU
C-125	Instrument panel wiring harness and front wiring harness combination
C-124	Instrument panel wiring harness and front wiring harness combination

Main Index
Group TOC

Connector number	Connector name
C-128	Instrument panel wiring harness and roof wiring harness combination
C-211	Roof wiring harness and J/B combination
C-210	Floor wiring harness and J/B combination

<<B>> SUCTION FLEXIBLE HOSE AND LIQUID PIPE B DISCONNECTION

⚠ CAUTION

Use the plug which is not breathable because A/C compressor oil or receiver have high hygroscopicity.

Plug the removed nipple of the pipe, hose and expansion valve to prevent the entry of dust and dirt.

DISASSEMBLY AND REASSEMBLY

M1552020900047

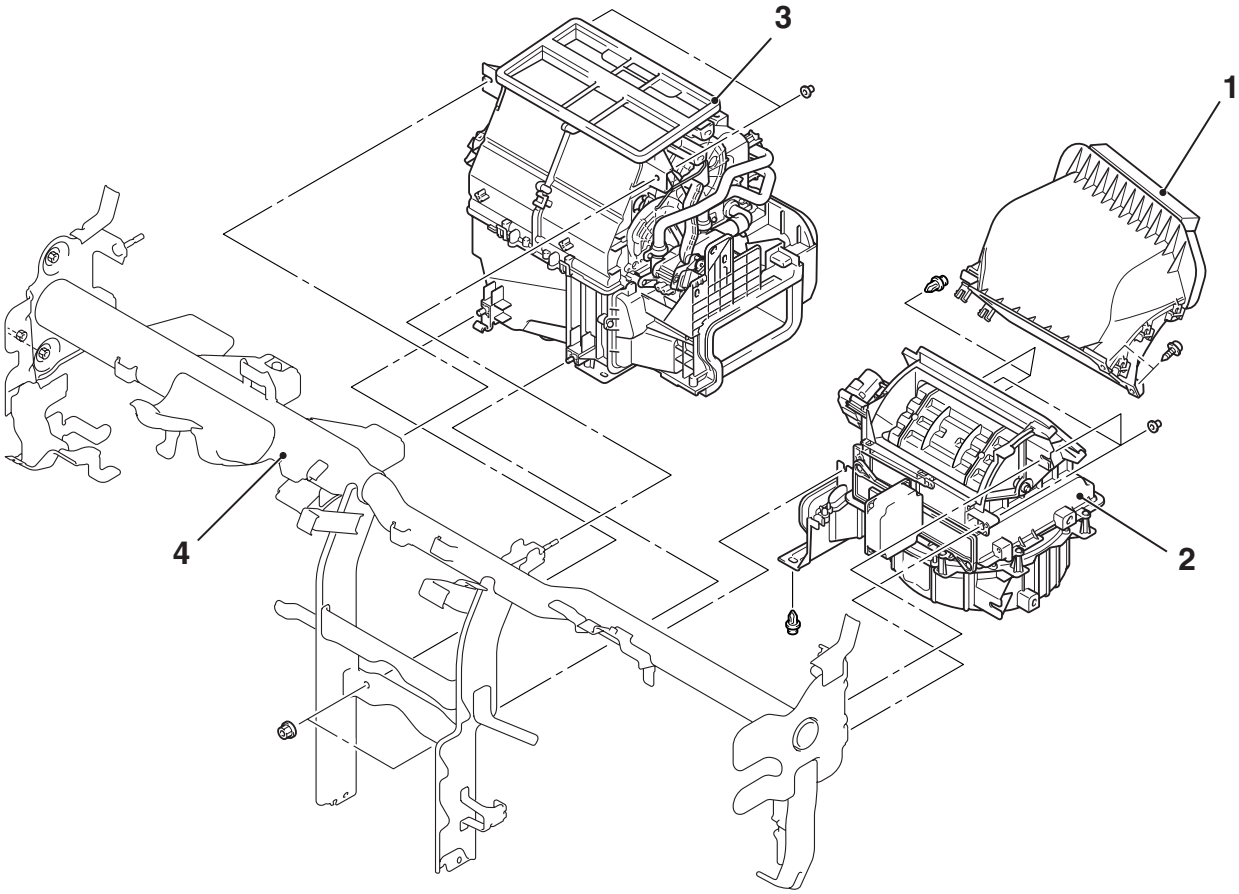

AC310130AB

Disassembly steps

1. Air intake duct
2. Blower assembly

Disassembly steps (Continued)

3. Hearer unit
4. Front deck cross member

Main Index
Group TOC

HEATER UNIT DISASSEMBLY AND REASSEMBLY

M1554009200124

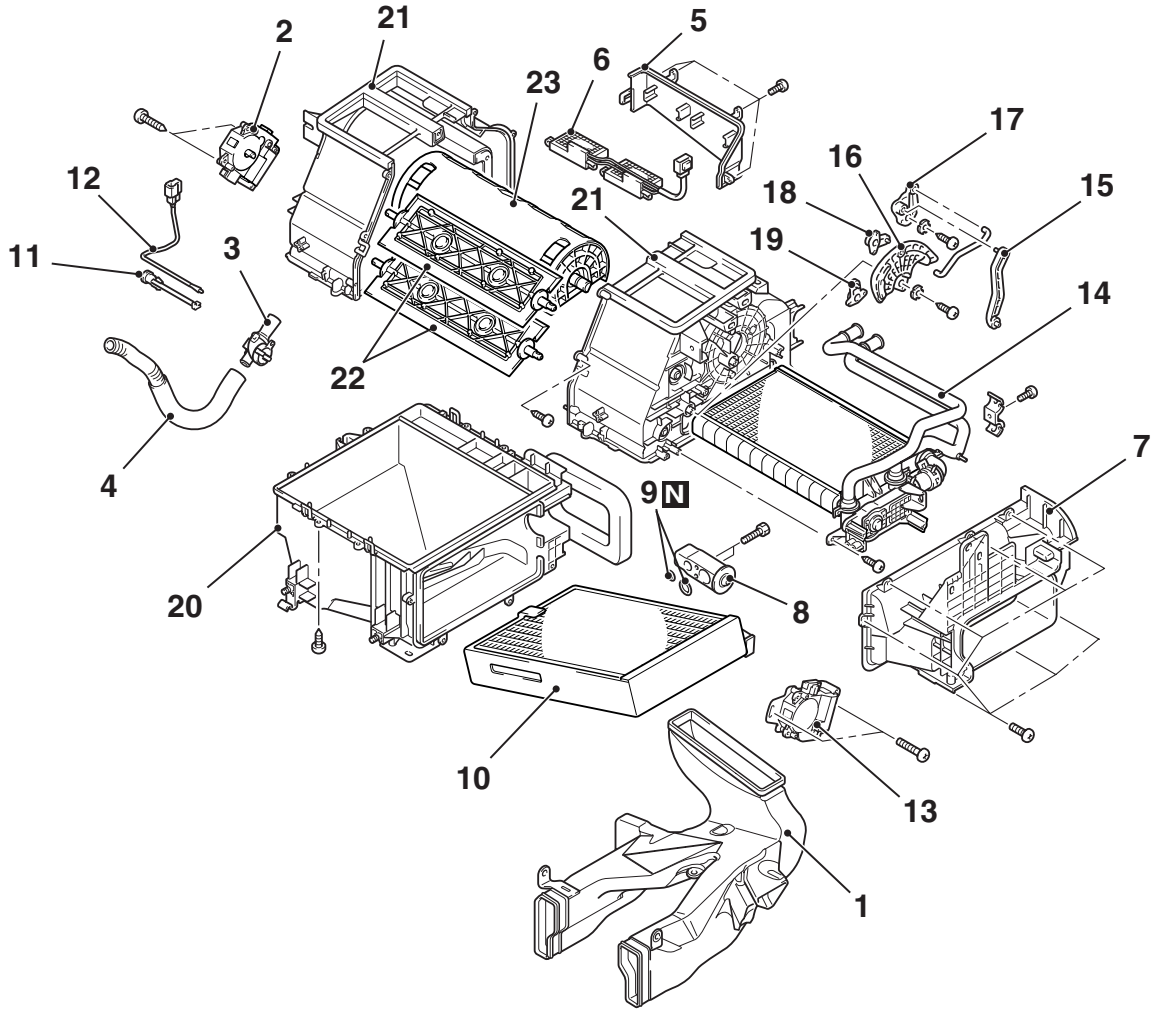

AC310132AB

Disassembly steps

1. Heater foot duct
2. Mode selection damper control motor and potentiometer
3. Aspirator
4. Aspirator hose
5. Heater side cover
6. PTC heater
7. Joint duct
8. Expansion valve
9. O-ring
10. Evaporator
11. Air thermo sensor clip
12. Air thermo sensor

Disassembly steps (Continued)

13. Front air mixing damper control motor and potentiometer
14. Heater core
15. Air mixing control link A
16. Air mixing control link B
17. Air mixing control link C
18. Air mixing control link D
19. Air mixing control link E
20. Heater case lower
21. Heater case upper
22. Air mixing damper
23. Mode selection damper

Main Index
Group TOC

BLOWER ASSEMBLY DISASSEMBLY AND REASSEMBLY

M1554017700038

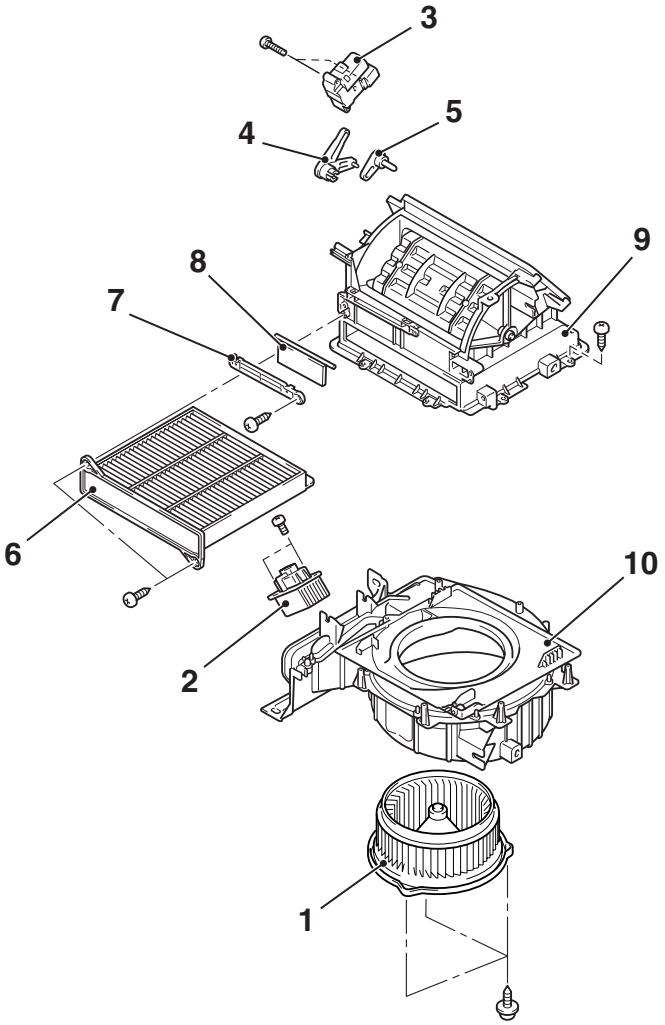

AC310131AB

Removal steps

1. Front blower motor
2. Front power transistor
3. Outside/Inside air selection damper motor
4. Outside/Inside air selection damper lever A

Removal steps (Continued)

5. Inside/outside air selection damper lever B
6. Clean air filter
7. Air intake plate
8. Inside air damper
9. Heater blower case upper
10. Heater blower case lower

Main Index
Group TOC

INSPECTION

M1552014301630

AIR THERMO SENSOR CHECK

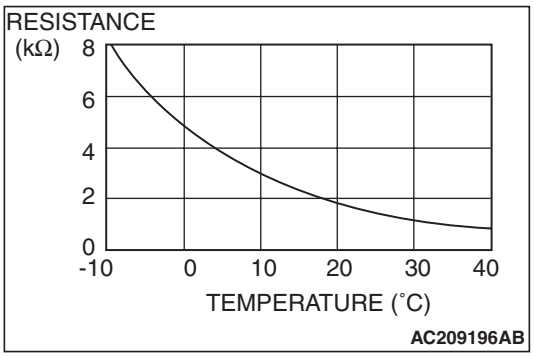

Check that the resistance shown in the graph is almost satisfied when measuring the resistance between the terminals under two or more different temperature conditions.

NOTE: The temperature condition in checking should be within the range shown.

PTC HEATER CHECK <VEHICLE WITH REAR HEATER OR DUAL AUTOMATIC A/C>

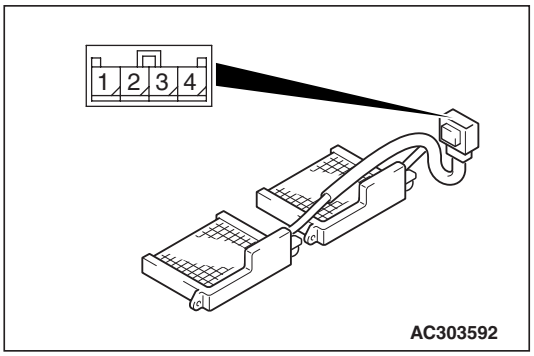

Check that there is continuity between the connector terminals 1 and 2 as well as 3 and 4.

Main Index
Group TOC

MODE SELECTION DAMPER CONTROL MOTOR, AIR MIXING DAMPER CONTROL MOTOR, OUTSIDE/ INSIDE AIR SELECTION DAMPER CONTROL MOTOR, POWER TRANSISTOR AND BLOWER MOTOR

REMOVAL AND INSTALLATION

M1554014900044

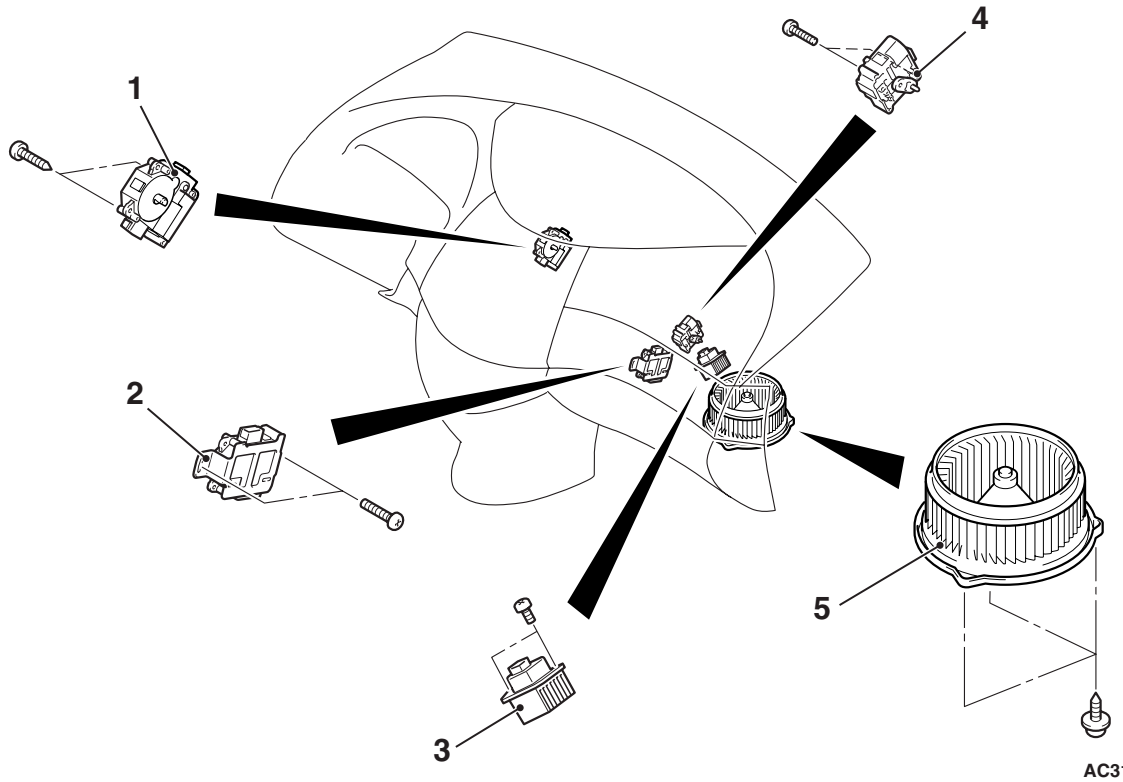

AC310137AB

Mode selection damper control motor removal step

- Front deck cross member and heater unit assembly (Refer to P.55-213.)

1. Mode selection damper control motor

Front air mixing damper control motor removal step

- Cowl side trim (Refer to GROUP 52A, Interior Trim P.52A-10.)
- Selector lever, selector lever panel and glove box (Refer to GROUP 52A, Instrument Panel P.52A-2.)

<<A>> >>A<< 2. Front air mixing damper control motor

Outside/inside air selection damper control motor and front power transistor removal step

- Cowl side trim (Refer to GROUP 52A, Interior Trim P.52A-10.)
- Selector lever, selector lever panel and glove box (Refer to GROUP 52A, Instrument Panel P.52A-2.)

3. Front power transistor
4. Outside/inside air selection damper control motor

Front blower motor removal step

5. Front blower motor

Main Index
Group TOC

REMOVAL SERVICE POINT

<<A>> FRONT AIR MIXING DAMPER CONTROL MOTOR REMOVAL

1. Turn the temperature control dial to the MAX COOL position.
2. Turn the air outlet changeover mode to the FACE or FACE/FOOT position, and then turn it to the FOOT position.

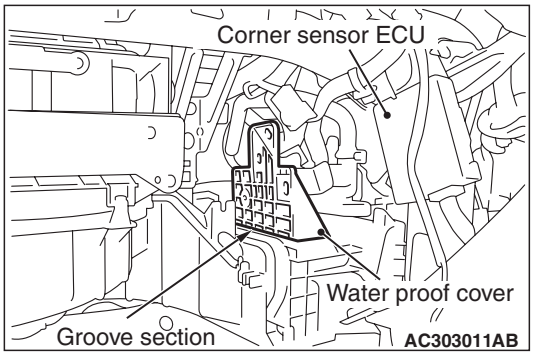

3. Cut the water proof cover away from the groove section.

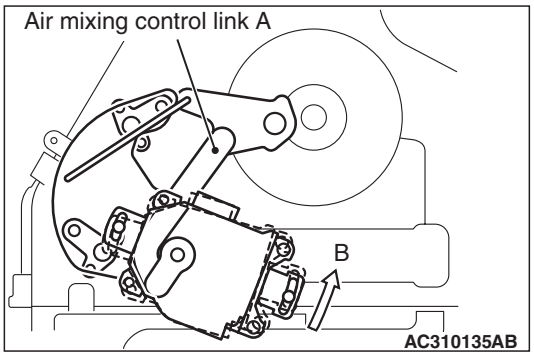

4. Rotate the front air mixing damper control motor to the direction B by approximately 20°, and remove it while pushing the air mixing control link A.

INSTALLATION SERVICE POINT

>>A<< FRONT AIR MIXING DAMPER CONTROL MOTOR INSTALLATION

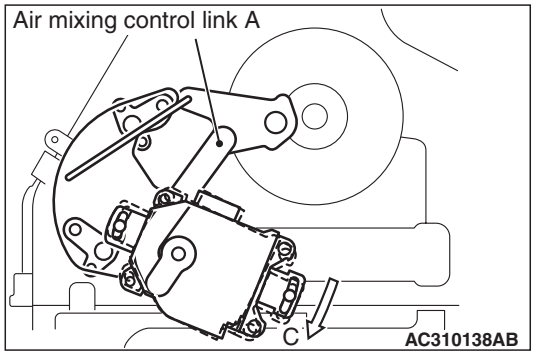

1. Install the front air mixing damper control motor to the link and rotate it to the direction C by approximately 20°.
2. Temporarily secure the front air mixing damper motor by the screw.

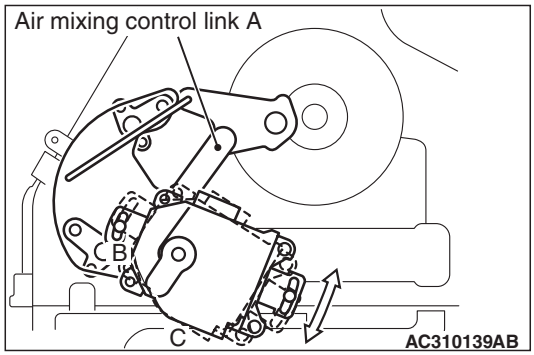

3. Operate the blower by maximum air volume, check the air leak from FACE air outlet. If there is the air leak, rotate the air mix damper control motor to the direction C to prevent the leak.

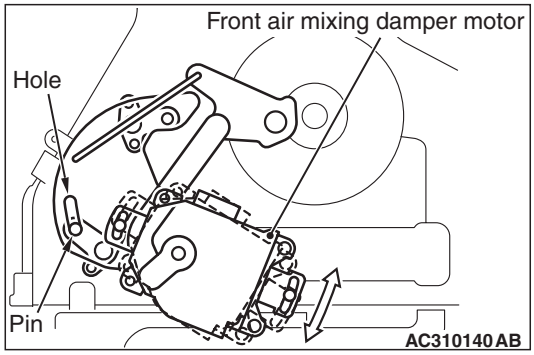

4. Check that there is the pin at the end of hole. If there is not, move the front air mixing damper control motor so that the pin is positioned at the end of hole.
5. Retighten the screw.

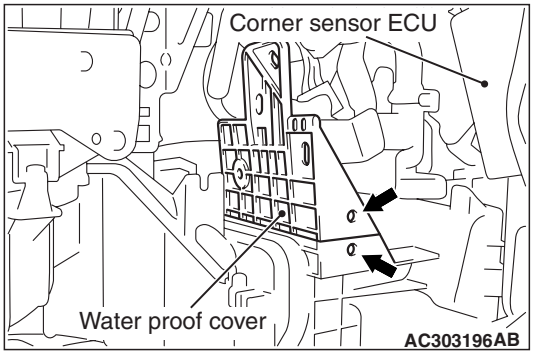

6. Drill in the section shown.

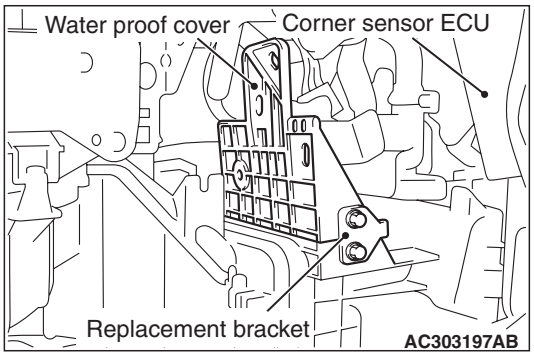

7. Secure the water proof cover with its replacement bracket.

INSPECTION

M1552014301641

CHECK THE MODE SELECTION DAMPER CONTROL MOTOR AND POTENTIOMETER

⚠ CAUTION

Stop energizing when the lever is set to the operation stopping position.

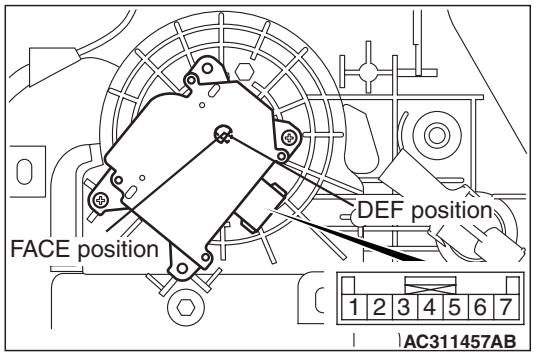

MOTOR CHECK

Battery connection (+) terminal	Battery connection (-) terminal	Lever operation
2	1	Rotate to the DEF side
1	2	Rotate to the FACE side

Potentiometer check

When the resistance value between connector terminals 3 and 5 is measured while checking the motor, check that the resistance value changes gradually within the standard value.

Standard value: 0.80 (FACE) – 4.80 (DEF) kΩ

Main Index
Group TOC

CHECK THE FRONT AIR MIXING DAMPER CONTROL MOTOR AND POTENTIOMETER

⚠ CAUTION

Stop energizing when the lever is set to the operation stopping position.

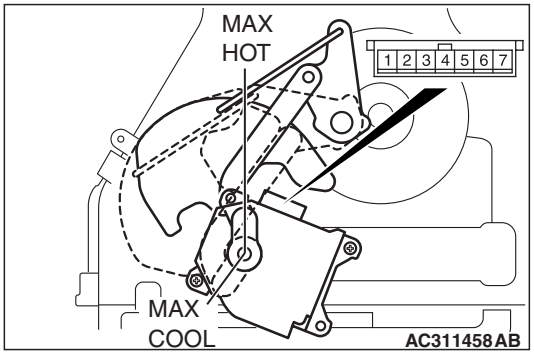

MOTOR CHECK

Battery connection (+) terminal	Battery connection (-) terminal	Lever operation
2	1	Rotate to the HOT side.
1	2	Rotate to the COOL side.

Potentiometer check

When the resistance value between connector terminals 3 and 5 is measured while checking the motor, check that the resistance value changes gradually within the standard value.

Standard value: 1.70 (MAX HOT) –5.00 (MAX COOL) kΩ

CHECK THE OUTSIDE/INSIDE AIR SELECTION DAMPER CONTROL MOTOR

⚠ CAUTION

Stop energizing when the lever is set to the operation stopping position.

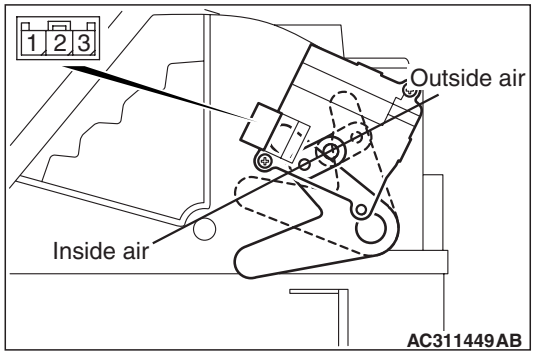

Connection (+) terminal	Connection (-) terminal	Lever operation
1	2	The rotation stops at the fresh air position
1	3	The rotation stops at the air recirculation position

FRONT BLOWER MOTOR CHECK

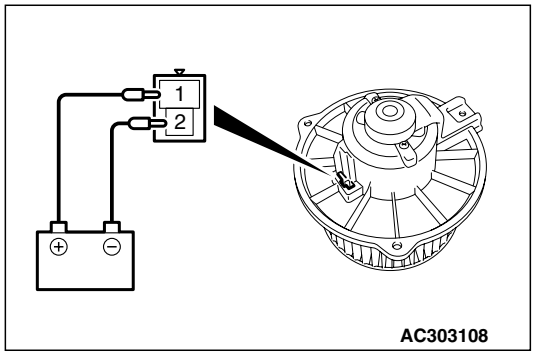

Check that the motor turns when applying battery power between the connector terminals. Also check to see that there is no abnormal sound emitted from the motor at this time.

PHOTO SENSOR AND INTERIOR TEMPERATURE SENSOR

REMOVAL AND INSTALLATION

M1554015100041

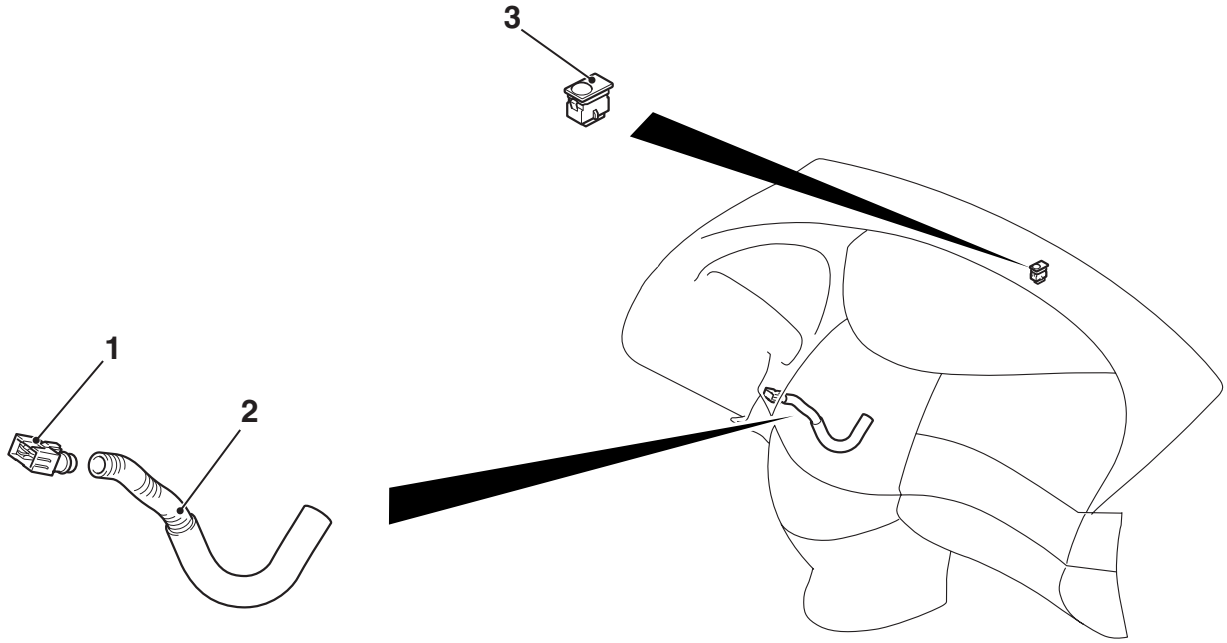

AC310253AB

Inside temperature sensor removal steps

- Cowl side trim (Refer to GROUP 52A, Interior Trim P.52A-10.)
- Selector lever, selector lever panel and instrument lower panel (Refer to GROUP 52A, Instrument Panel P.52A-2.)

1. Interior temperature sensor
2. Aspirator hose

<<A>>

Photo sensor removal steps

- Combination meter bezel, combination meter (Refer to GROUP 54A, Combination meter P.54A-101.)
- Door opening trim, front pillar trim (Refer to GROUP 52A, Interior Trim P.52A-10.)
- Defroster garnish (Refer to GROUP 52A, Instrument Panel P.52A-2.)

3. Photo sensor

Main Index
Group TOC

REMOVAL SERVICE POINTS

<<A>> PHOTO SENSOR REMOVAL

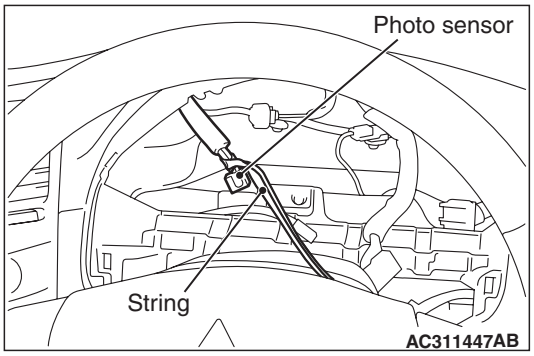

Cut the connector behind the combination meter away and tie it with string so that the photo sensor can be drawn out from the instrument panel easily.

INSPECTION

M1552014301652

INTERIOR TEMPERATURE SENSOR CHECK

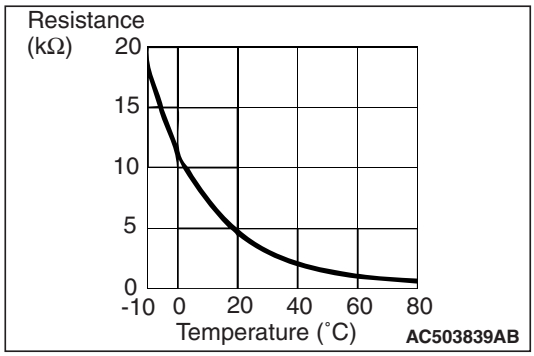

Check to see that the resistance shown in the graph is almost satisfied when measuring the resistance between the terminals under two or more different temperature conditions.

PHOTO SENSOR CHECK

Check that the display voltage changes between in direct sunlight and in doors when checking the M.U.T.-III service data item No.06.

AMBIENT TEMPERATURE SENSOR

REMOVAL AND INSTALLATION

M1554003400153

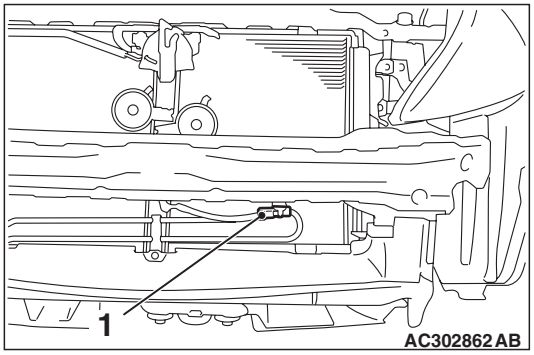

Removal steps

- Front bumper (GROUP 51, Front Bumper P.51-3.)

1. Ambient temperature sensor

INSPECTION

M1552014301663

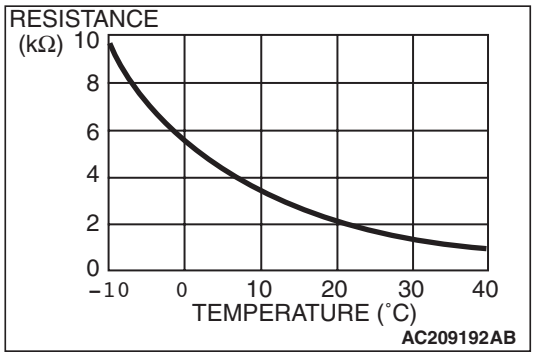

Check to see that the resistance shown in the graph is almost satisfied when measuring the resistance between the sensor terminals under two or more different temperature conditions.

Main Index
Group TOC

HEAT SWITCH

REMOVAL AND INSTALLATION <VEHICLES WITH REAR HEATER OR REAR A/C VEHICLES>

M1554017000040

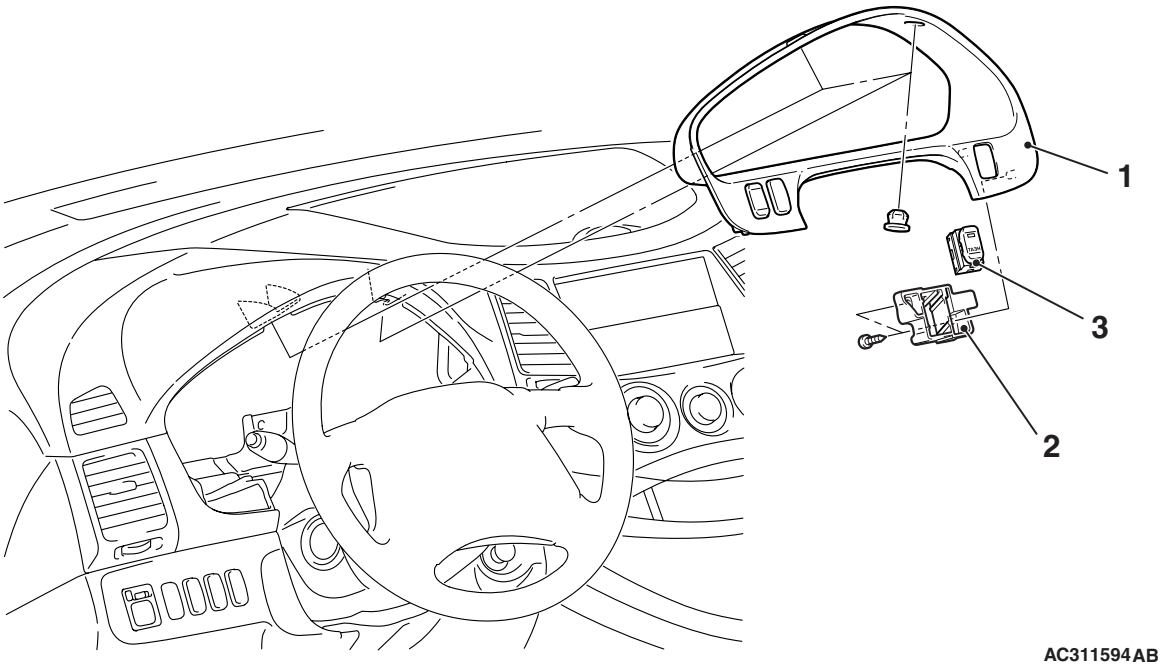

Removal steps

1. Combination meter bezel (GROUP 52A, Instrument Panel P.52A-2.)

Removal steps (Continued)

2. Heat switch holder
3. Heat switch

INSPECTION

M1554011900078

PTC HEATER SWITCH CONTINUITY CHECK

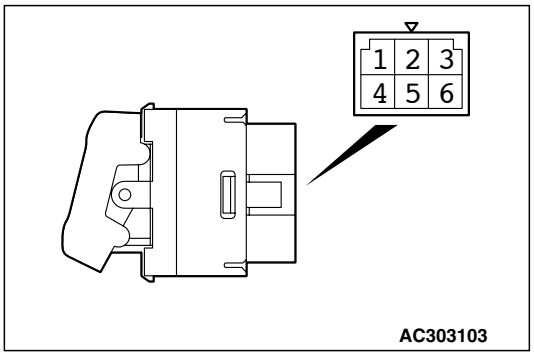

Switch position	Tester connection	Specified condition
OFF	1 – 2	Open circuit
ON		Less than 2 ohms

Main Index
Group TOC

REAR A/C SWITCH

REMOVAL AND INSTALLATION

M1554017200044

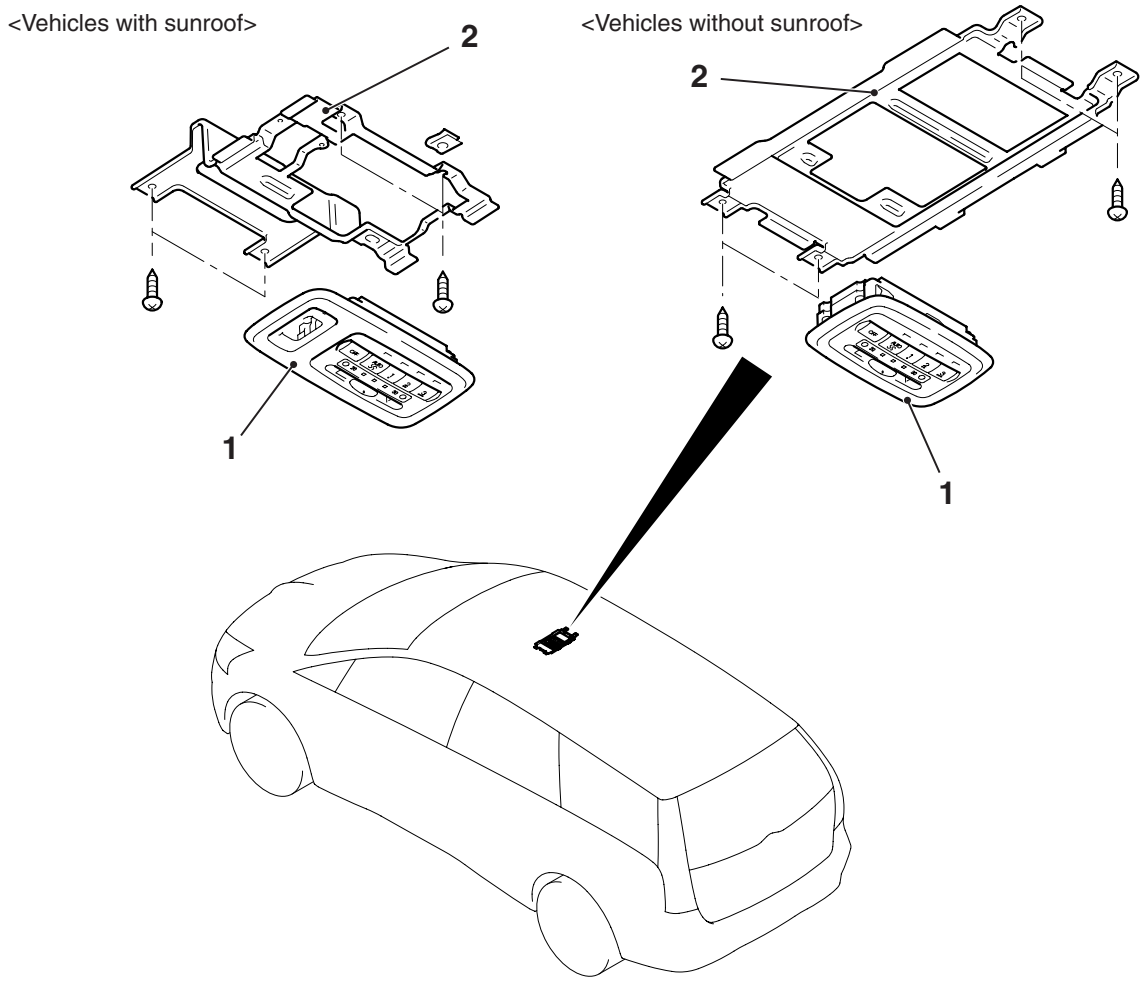

Removal steps

1. Rear heater controler (Refer to GROUP 52A, Headlining P.52A-17.)

Removal steps (Continued)

- Headlining (Refer to GROUP 52A, Headlining P.52A-17.)

2. Rear heater controler bracket

Main Index
Group TOC

INSPECTION

M1552014301674

REAR HEATER CONTROLLER CONTINUITY CHECK

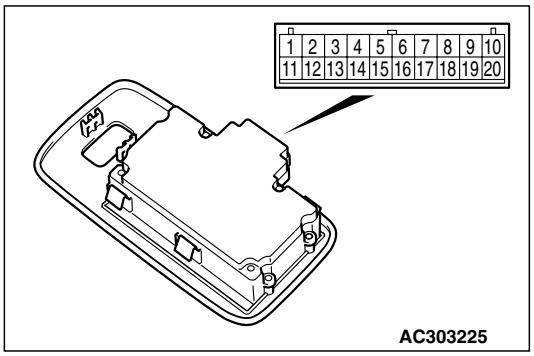

REAR AIR VOLUME ADJUSTING SWITCH

Switch status	Checking terminal	Normal conditions
OFF	4 – 9	2 Ω or less
AUTO <vehicles with dual automatic A/C>	5 – 9	2 Ω or less
1	6 – 9	2 Ω or less
2	7 – 9	2 Ω or less
3	8 – 9	2 Ω or less

REAR TEMPERATURE CONTROL KNOB <VEHICLES WITH DUAL AUTOMATIC A/C>

Check that the resistance value between connector terminals 14 and 15 changes gradually within the standard value when moving the knob.

Standard value: Approximately 3kΩ or less

Main Index
Group TOC

REAR HEATER UNIT

REMOVAL AND INSTALLATION

M1554015300056

Pre-removal and Post-installation Operation
- Engine coolant Draining and Refilling (Refer to GROUP 14, On vehicles service P.14-18.)
- Refrigerant draining and Refilling (Refer to P.55-206.)
- Third seat assembly removal and installation (Refer to GROUP 52A, Third Seat Assembly P.52A-35.)
- Quarter trim lower and quarter trim upper removal and installation (Refer to GROUP 52A, Interior Trim P.52A-10.)

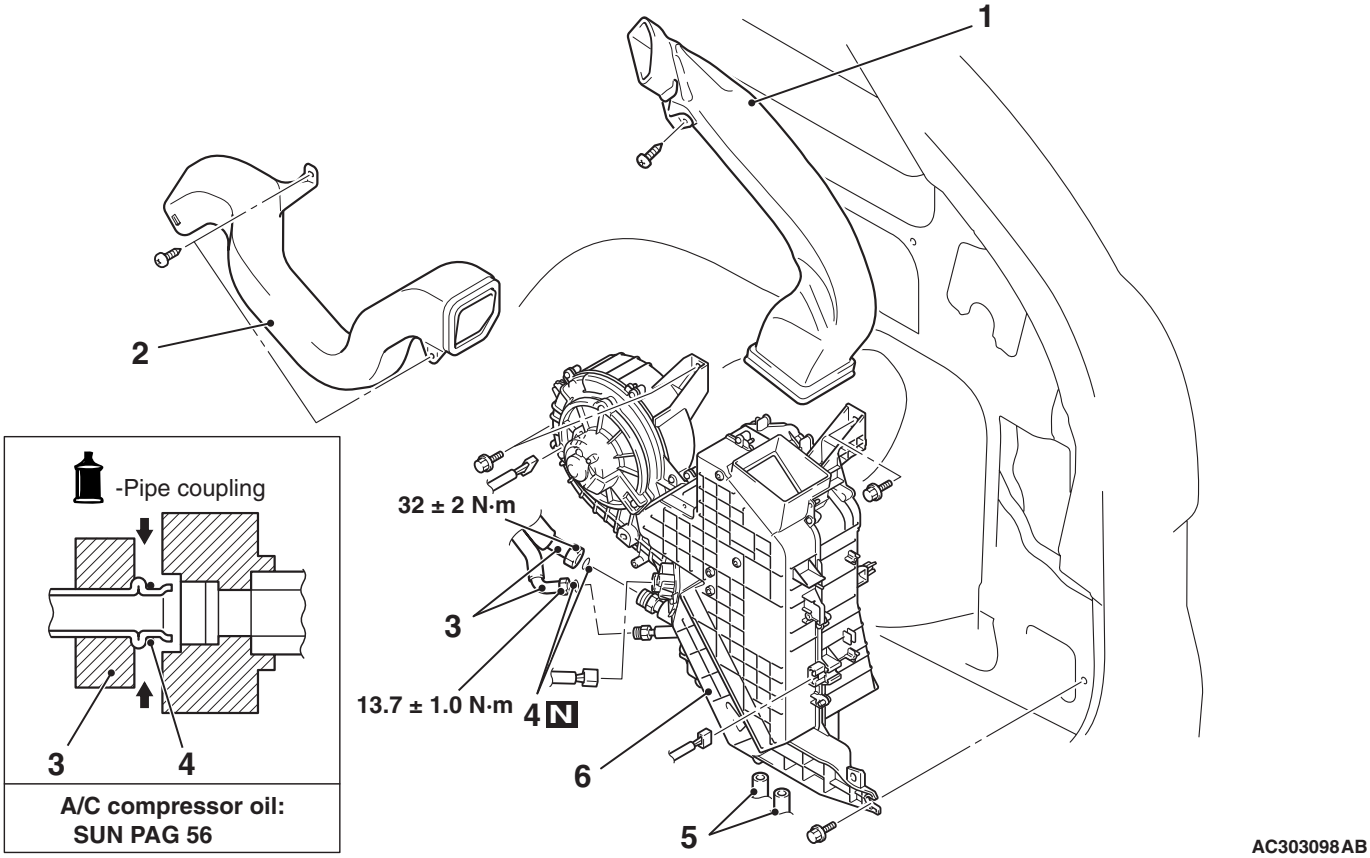

Removal steps
1. Rear pillar duct
2. Rear floor duct A
3. Rear A/C pipe connection

<<A>>

Removal steps (Continued)
4. O ring
5. Heater hose connection
6. Rear heater unit

REMOVAL SERVICE POINTS

<<A>> REAR A/C PIPE REMOVAL

⚠ CAUTION

Use the plug which is not breathable because A/C compressor oil or receiver have high hygroscopicity.

Plug the pipe nipple to prevent the entry of dust and dirt.

Main Index
Group TOC

DISASSEMBLY AND REASSEMBLY <VEHICLES WITH REAR HEATER, REAR COOLER OR DUAL AUTOMATIC A/C>

M1554017600031

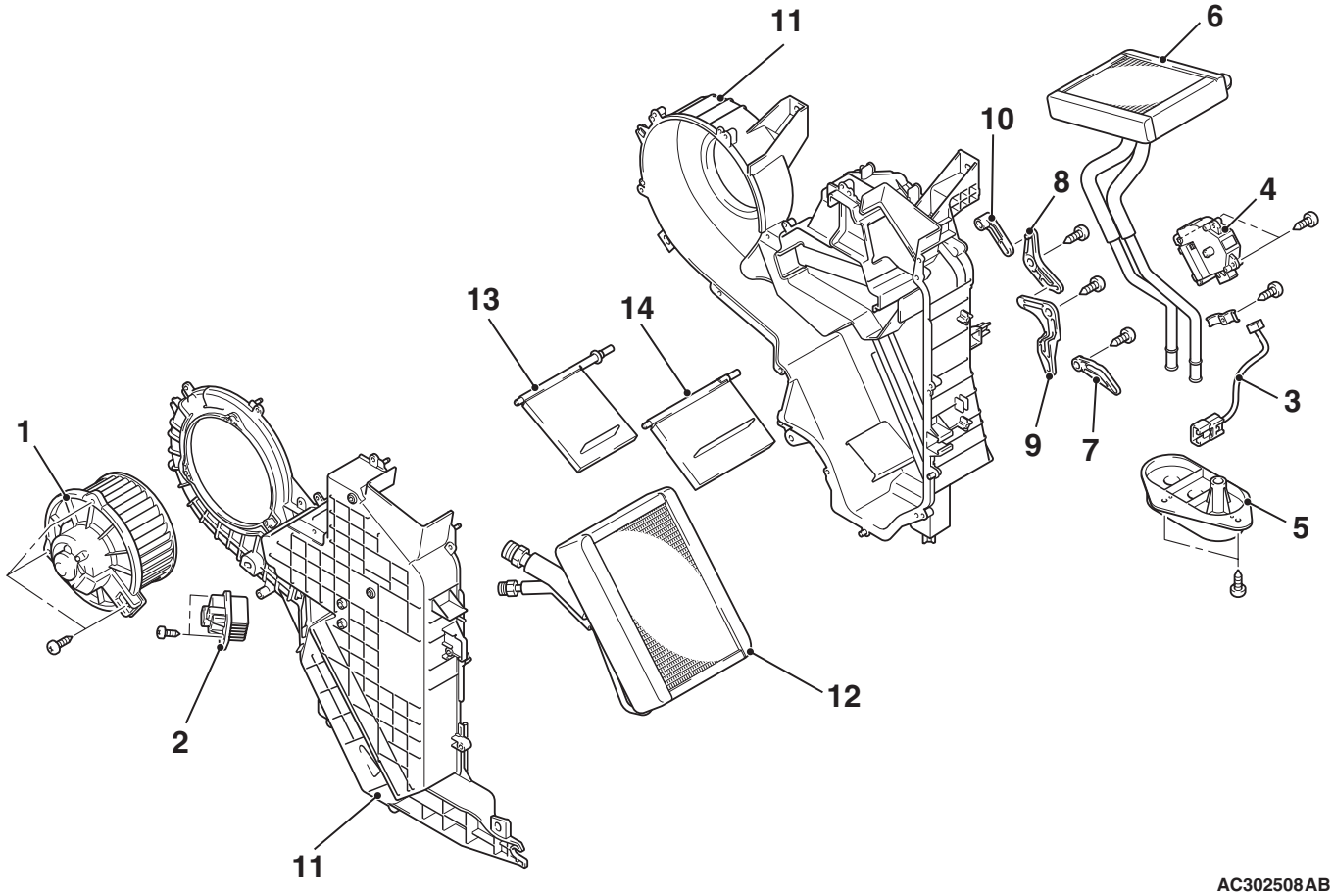

AC302508AB

Removal steps

1. Rear blower motor <Vehicles with rear heater, rear cooler or dual automatic A/C>
2. Rear power transistor <Vehicles with rear heater, rear cooler or dual automatic A/C>
3. Harness <vehicles with dual automatic A/C>
4. Rear air mix damper control motor <Vehicles with dual automatic A/C>
5. Rear heater pipe bracket <Vehicles with rear heater or dual automatic A/C>
6. Rear heater core <Vehicles with rear heater or dual automatic A/C>
7. Rear air mix lever <Vehicles with dual automatic A/C>

Removal steps (Continued)

8. Rear mode selection damper lever A <Vehicles with dual automatic A/C>
9. Rear mode selection damper lever B <Vehicles with dual automatic A/C>
10. Rear mode selection damper lever C <Vehicles with dual automatic A/C>
11. Rear heater case <Vehicles with rear heater, rear cooler or dual automatic A/C>
12. Evaporator <vehicles with rear cooler or dual automatic A/C>
13. Rear mode selection damper <Vehicles with dual automatic A/C>
14. Rear mode selection damper <Vehicles with dual automatic A/C>

Main Index
Group TOC

INSPECTION

M1552014301685

CHECK THE REAR AIR MIX DAMPER MOTOR AND POTENTIOMETER <VEHICLES WITH DUAL AUTOMATIC A/C>

⚠ CAUTION

Stop energizing when the lever is set to the operation stopping position.

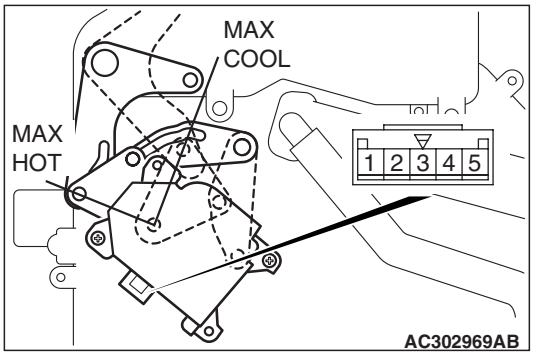

MOTOR CHECK

Battery connection (+) terminal	Battery connection (-) terminal	Lever operation
2	1	Rotate to the MAX HOT side.
1	2	Rotate to the MAX COOL side.

Potentiometer check

When the resistance value between connector terminals 3 and 5 is measured while checking the motor, check that the resistance value changes gradually within the standard value.

Standard value: 1.20 (MAX COOL) – 4.80 (MAX HOT) kΩ

Main Index
Group TOC

REAR BLOWER MOTOR AND REAR POWER TRANSISTOR

REMOVAL AND INSTALLATION

M1554015500049

Pre-removal and Post-installation Operation
- Third seat assembly Removal and Installation (Refer to GROUP 52A, Third Seat Assembly P.52A-35.)
- Quarter trim lower, quarter trim upper Removal and Installation (Refer to GROUP 52A, Interior Trim P.52A-10.)

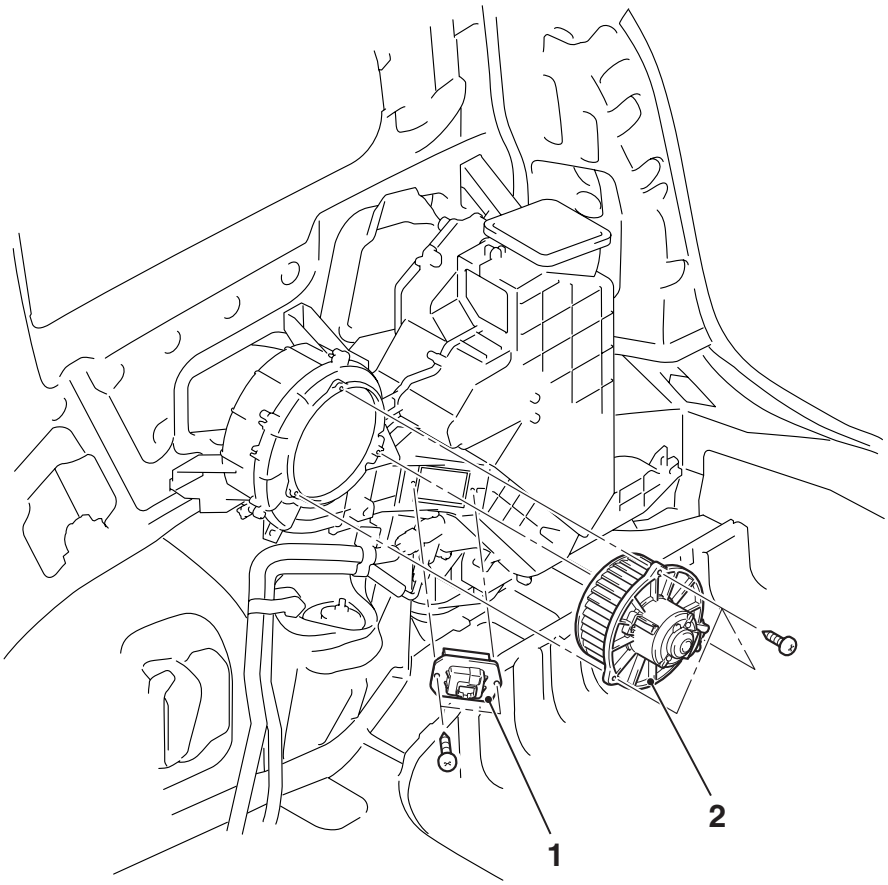

AC302929 AC

Rear power transistor removal step

1. Rear power transistor <Vehicles with rear heater, rear cooler or dual automatic A/C>

Rear blower motor removal steps

- Rear floor duct A <Vehicles with rear heater or rear A/C> (Refer to P.55-249.)
2. Rear blower motor <Vehicles with rear heater, rear cooler or dual automatic A/C>

Main Index
Group TOC

INSPECTION

M1554011900089

REAR BLOWER MOTOR INSPECTION <VEHICLES WITH REAR HEATER, REAR COOLER OR DUAL AUTOMATIC A/C>

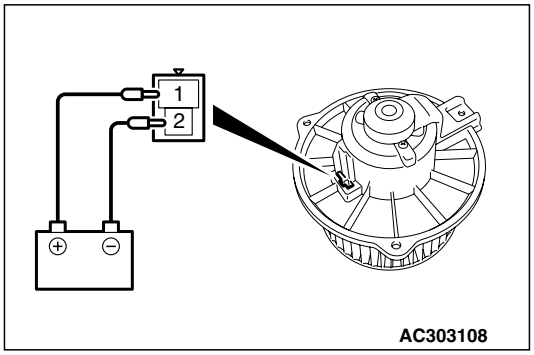

Check that the motor turns when applying battery power between the connector terminals. Also check to see that there is no abnormal sound emitted from the motor at this time.

Main Index
Group TOC

COMPRESSOR ASSEMBLY

REMOVAL AND INSTALLATION

M1552004400569

<EXCEPT VEHICLES FOR HONG KONG AND SINGAPORE>

Pre-removal Operation	Post-installation Operation
• Refrigerant Discharging (Refer to P.55-206). • Front Under Cover Panel Assembly	• Refrigerant Charging (Refer to P.55-206). • Drive Belt Tension Adjustment (Refer to GROUP 11A, On-vehicles Service – Drive Belt Tension Check P.11A-8). • Front Under Cover Panel Assembly

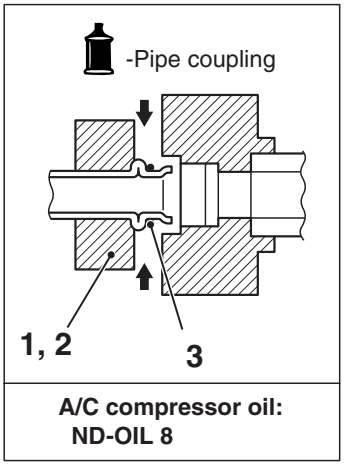

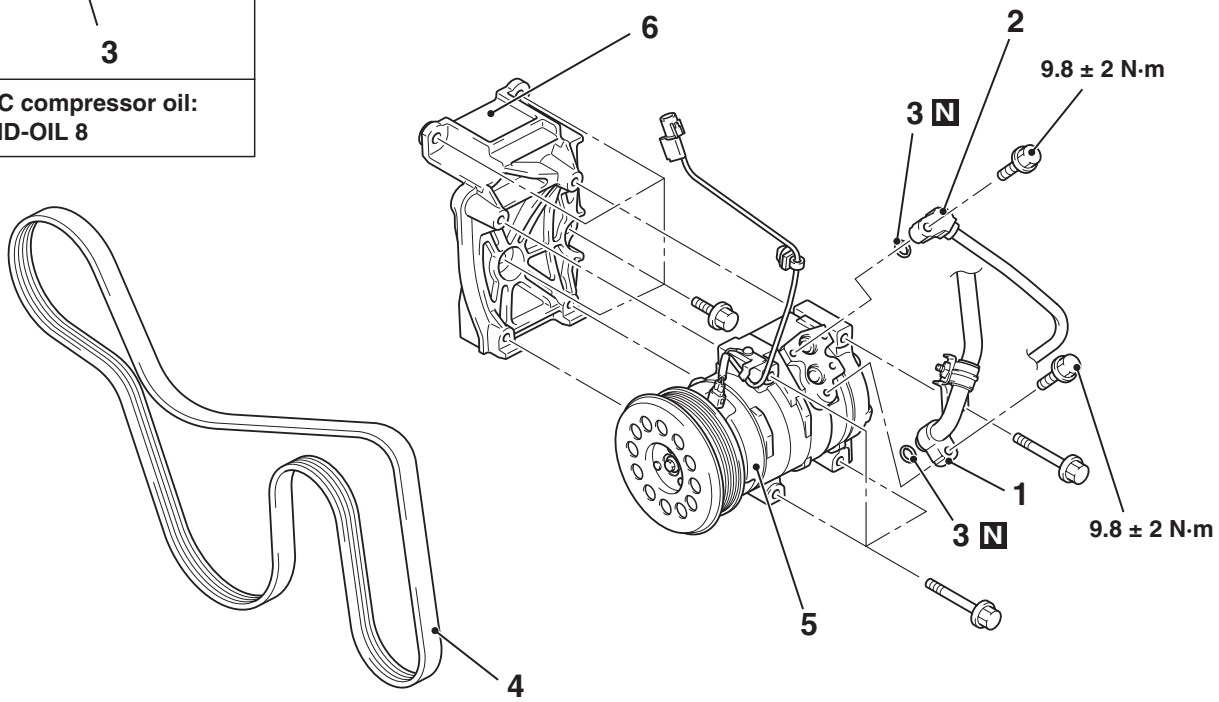

AC313053AB

Removal steps

<<A>> 1. Flexible suction hose connection
<<A>> 2. Flexible discharge hose connection
3. O-ring

Removal steps (Continued)

<<B>> 4. Drive belt
<<C>> >>A<< 5. A/C compressor assembly
6. A/C compressor bracket

Main Index
Group TOC

<VEHICLES FOR HONG KONG AND SINGAPORE>

Pre-removal Operation	Post-installation Operation
• Refrigerant Discharging (Refer to P.55-206). • Front Under Cover Panel Assembly	• Refrigerant Charging (Refer to P.55-206). • Drive Belt Tension Adjustment (Refer to GROUP 11A, On-vehicles Service – Drive Belt Tension Check P.11A-8). • Front Under Cover Panel Assembly

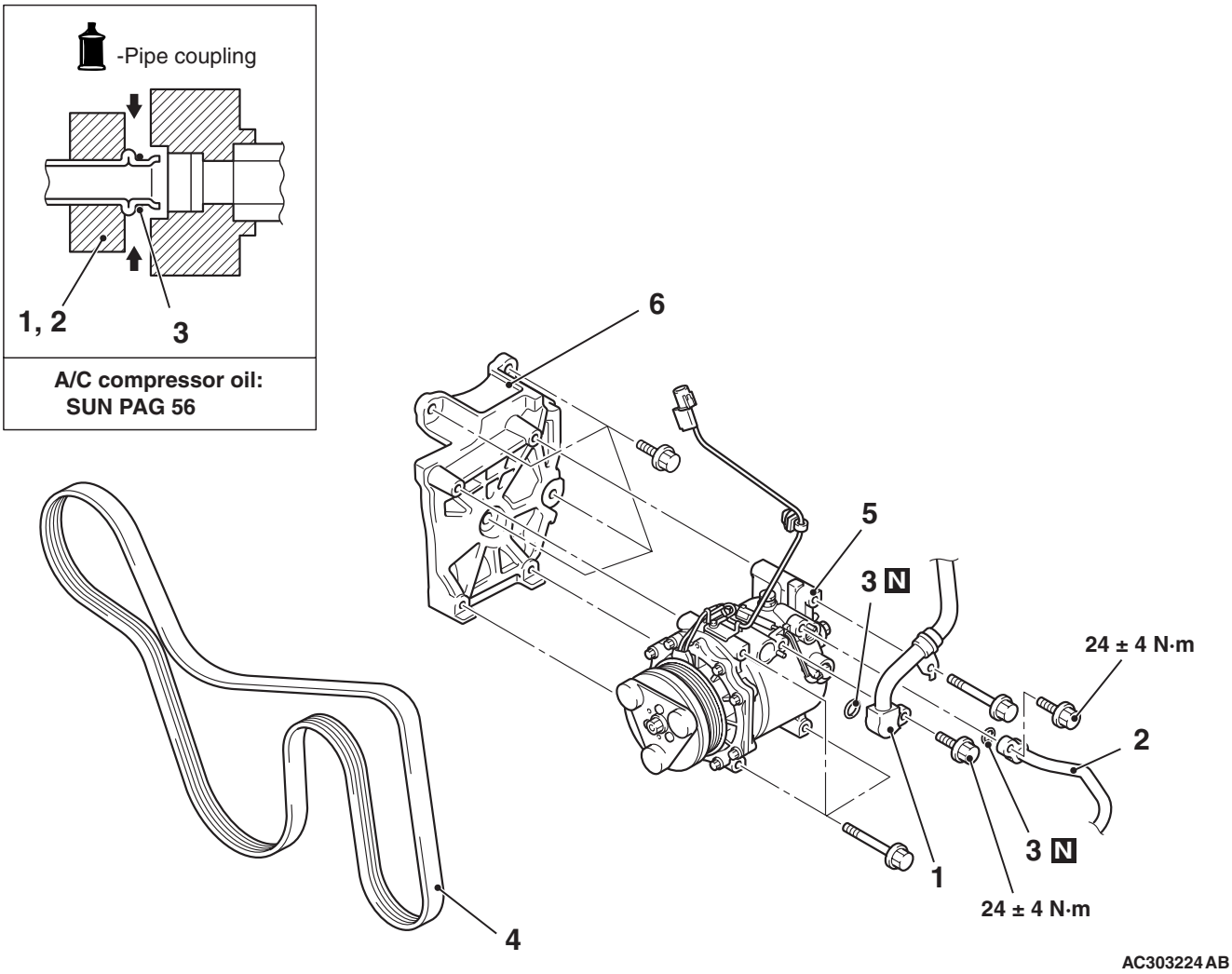

Removal steps

<<A>> 1. Flexible suction hose connection
<<A>> 2. Flexible discharge hose connection
3. O-ring

Removal steps (Continued)

<<B>> 4. Drive belt
<<C>> >>B<< 5. A/C compressor assembly
6. A/C compressor bracket

REMOVAL SERVICE POINTS

<<A>> FLEXIBLE SUCTION HOSE AND FLEXIBLE DISCHARGE HOSE DISCONNECTION

⚠ CAUTION

Use the plug which is not breathable because A/C compressor oil or receiver have high hygroscopicity.

Plug the hose nipple removed to prevent the entry of dust and dirt.

<<B>> DRIVE BELT REMOVAL

The following operations will be needed due to the introduction of the serpentine drive system with the drive belt auto-tensioner.

Main Index
Group TOC

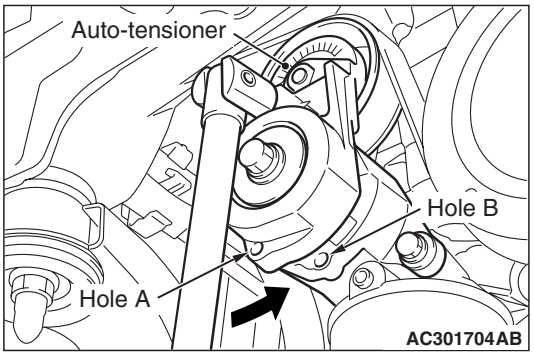

1. Securely insert the spindle handle or ratchet handle with a 12.7 mm insertion angle into the jig hole of the auto-tensioner.
2. Rotate the auto-tensioner anti-clockwise and align hole A with hole B.

⚠ CAUTION

To reuse the drive belt, draw an arrow indicating the rotating direction (clockwise) on the back of the belt using chalk, etc.

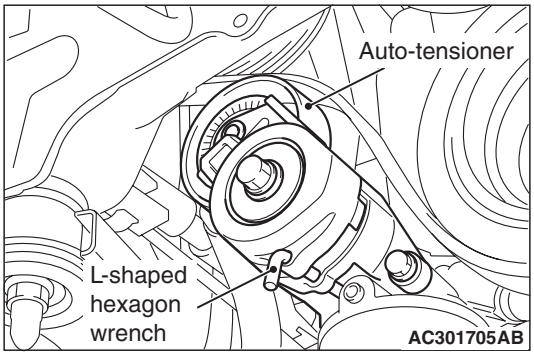

3. Insert an L-shaped hexagon wrench, etc. into the hole to fix and then remove the drive belt.

<<C>> A/C COMPRESSOR REMOVAL

Be careful not to spill the A/C compressor oil and remove the A/C compressor.

INSTALLATION SERVICE POINT

>>A<< A/C COMPRESSOR INSTALLATION <EXCEPT VEHICLES FOR HONG KONG AND SINGAPORE>

When installing the new A/C compressor, install the A/C compressor after adjusting the oil volume as follows.

1. Measure the oil of A/C compressor removed.(X cm^3)
2. Drain the oil (Y cm^3) given by the following expression from a new A/C compressor, and then install the A/C compressor.

160 cm^3 - X cm^3 = Y cm^3

NOTE:

1. *160 cm^3 shows the oil volume contained in the new A/C compressor.*
2. *Y cm^3 shows the oil volume stored in the refrigerant line, condenser, and cooling unit, etc.*

>>B<< A/C COMPRESSOR INSTALLATION <VEHICLES FOR HONG KONG AND SINGAPORE>

When installing the new A/C compressor, install the A/C compressor after adjusting the oil volume as follows.

1. Measure the oil of A/C compressor removed. (X cm^3)
2. Drain the oil (Y cm^3) given by the following expression from a new A/C compressor, and then install the A/C compressor.

180 cm^3 - X cm^3 = Y cm^3

NOTE:

1. *180 cm^3 shows the oil volume contained in the new A/C compressor.*
2. *Y cm^3 shows the oil volume stored in the refrigerant line, condenser, and cooling unit, etc.*

INSPECTION

M1552004500221

CHECK THE MAGNETIC CLUTCH FOR A/C COMPRESSOR

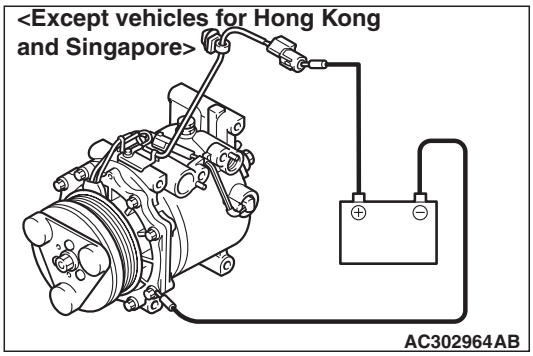

Connect the connector battery to positive battery terminal in the A/C compressor, and then earth the battery (–) terminal to the A/C compressor itself. At this time, check that the magnetic clutch operating sound can be heard.

Main Index
Group TOC

DISASSEMBLY AND REASSEMBLY

M1552004600563

<Except vehicles for Hong Kong and Singapore>

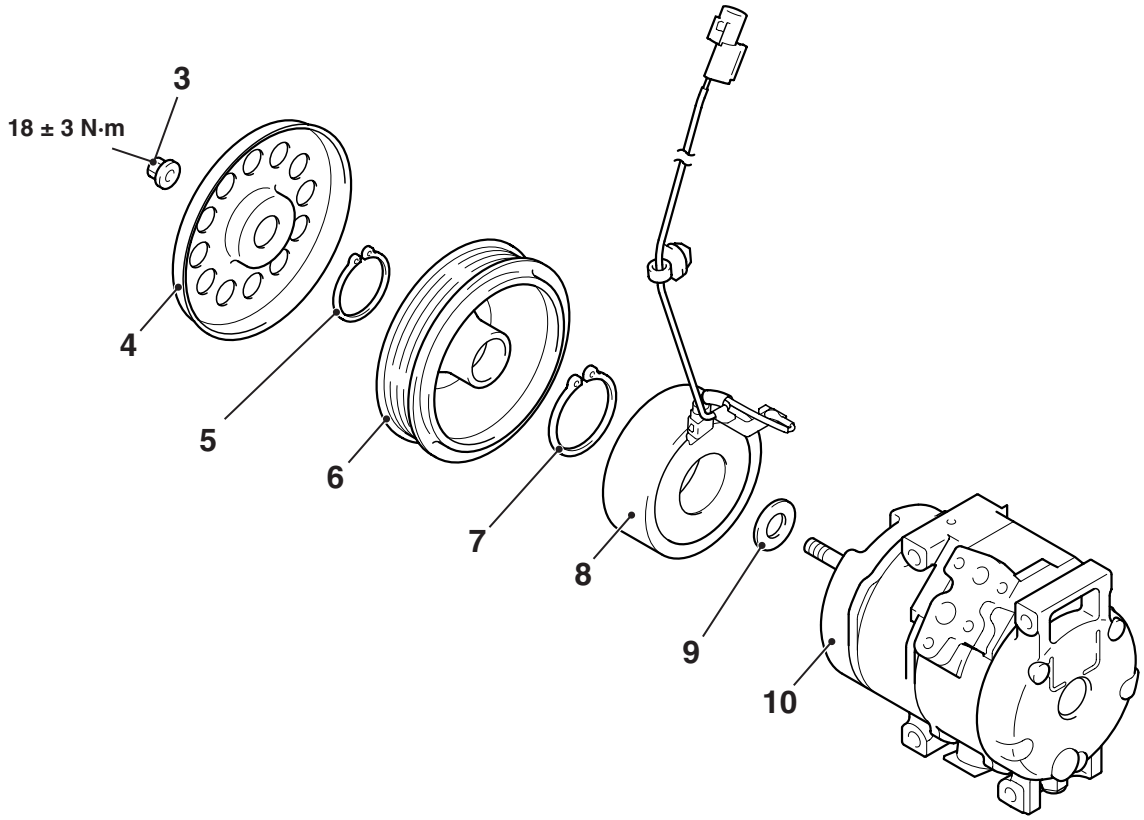

AC313547AB

<Vehicles for Hong Kong and Singapore>

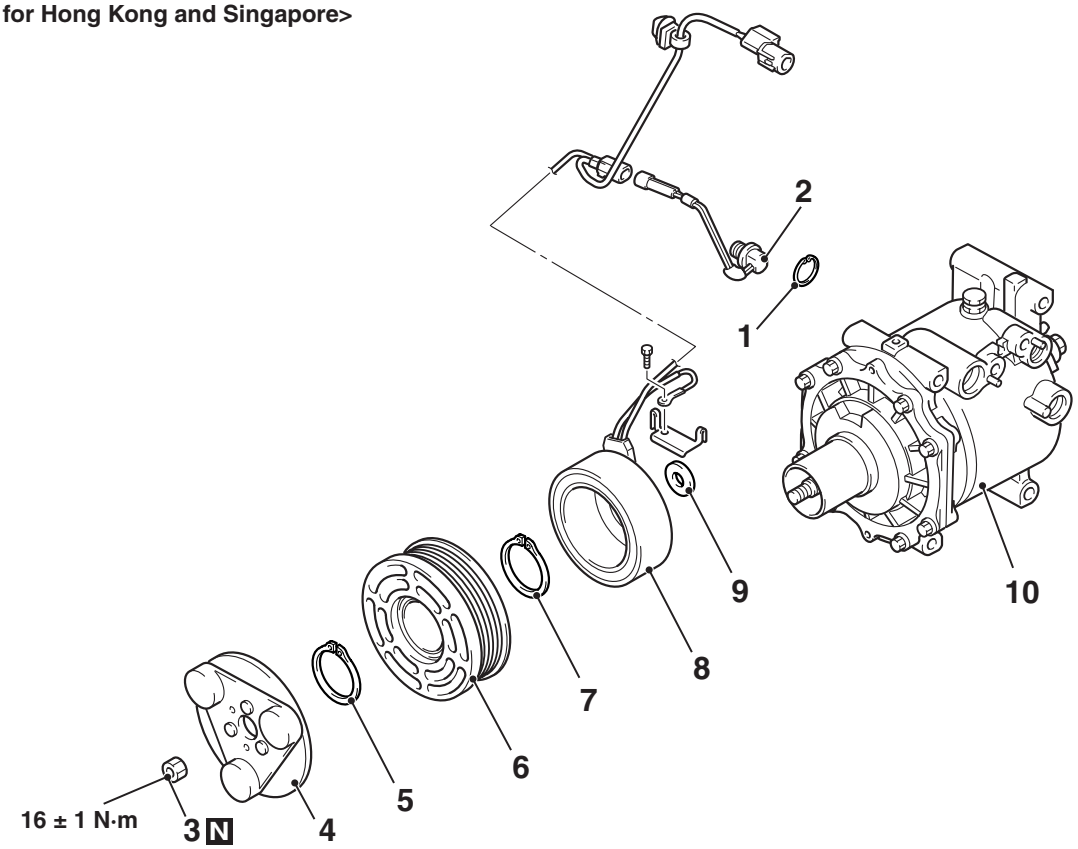

AC302963AE

Main Index
Group TOC

Cooling temperature switch disassembly steps

1. Snap ring
2. Refrigerant temperature switch

Magnetic clutch disassembly

>>D<< • Air gap adjustment

<<A>> >>C<< 3. Self-locking nut

Magnetic clutch disassembly

4. Armature

>>B<< 5. Snap ring

6. Rotor
7. Snap ring

>>A<< 8. A/C compressor coil

9. Shim
10. A/C compressor

DISASSEMBLY SERVICE POINT

<<A>> SELF-LOCKING NUT REMOVAL

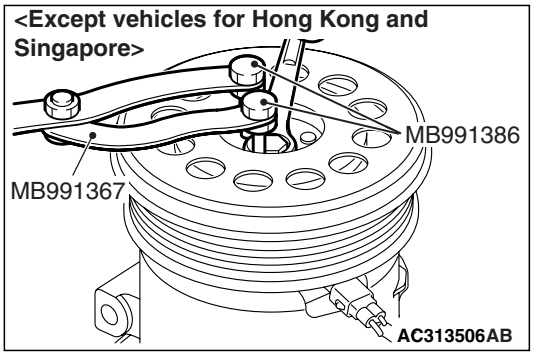

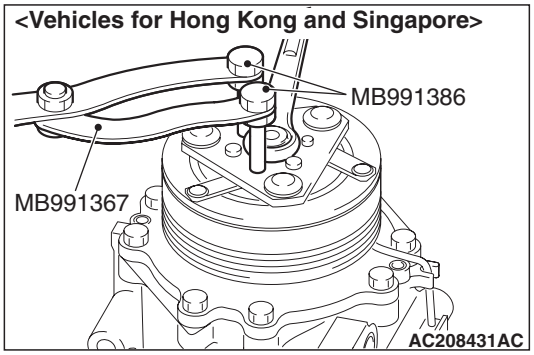

Use the special tools to remove the self-locking nut.

- Special spanner (MB991367)
- Pin (MB991386)

REASSEMBLY SERVICE POINTS

>>A<< A/C COMPRESSOR COIL INSTALLATION

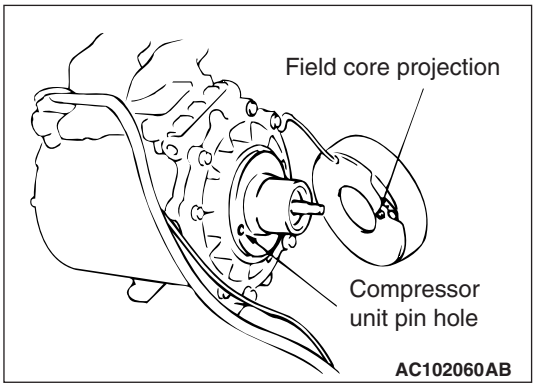

Install the A/C compressor coil while aligning the pin hole of A/C compressor itself with the protrusion of A/C compressor coil

>>B<< SNAP RING INSTALLATION

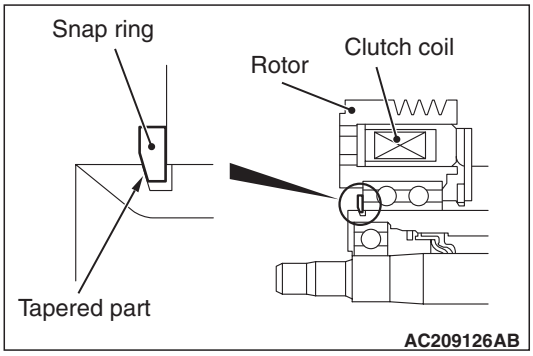

Use the snap ring plier and Install the snap ring so that the taper faces the outside.

>>C<< SELF-LOCKING NUT INSTALLATION

Use the special tool as during removal to secure the armature and tighten the self-locking nut.

Main Index
Group TOC

>>D<< AIR GAP ADJUSTMENT

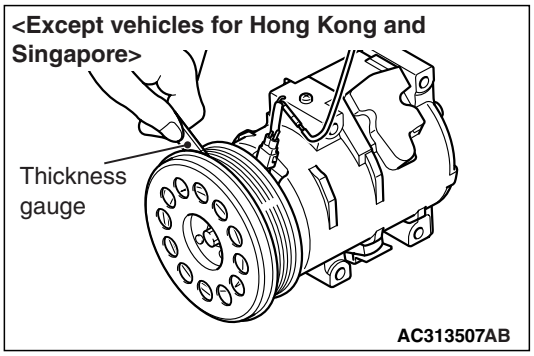

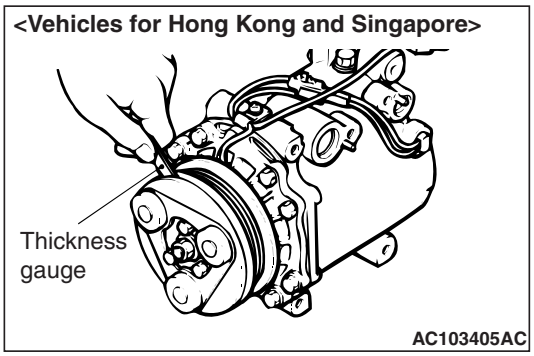

Check that the air gap of clutch satisfies the standard value. If not within the standard value, use shims to adjust it.

Standard value: 0.3 – 0.5 mm <Except vehicles for Hong Kong and Singapore>

Standard value: 0.35 – 0.6 mm <Vehicles for Hong Kong and Singapore>

INSPECTION

M1552004700106

REFRIGERANT TEMPERATURE SWITCH <Vehicles for Hong Kong and Singapore>

⚠ CAUTION

Do not heat than necessary.

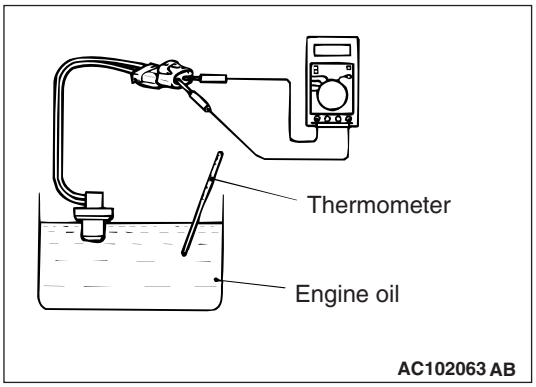

1. Immerse the refrigerant temperature sensor probe into engine oil to heat the sensor probe.

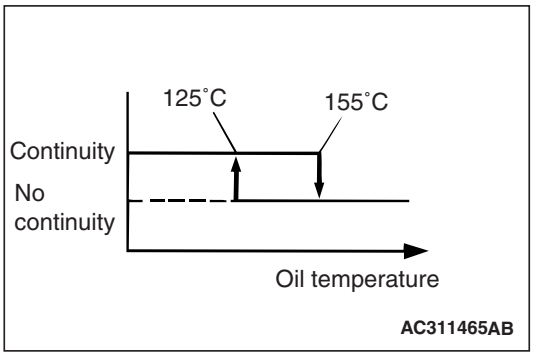

2. If the oil temperature reaches the standard value, there should be continuity between the switch terminals.

Switch status	Operating temperature °C
Being turned off (No continuity)	155
Being turned on (2Ω or less)	125

NOTE: When the oil temperature is 155℃ or more and there is no continuity, the resistance will not be 2Ω or lower until the oil temperature reduces to 125 ℃ or less.

Main Index
Group TOC

CONDENSER ASSEMBLY

REMOVAL AND INSTALLATION

M1552015400336

Pre-removal and Post-installation Operation
- Refrigerant draining and Refilling (Refer to P.55-206.)
- Battery and Battery tray
- Air cleaner intake duct (Refer to GROUP 15, Air Cleaner P.15-3.)

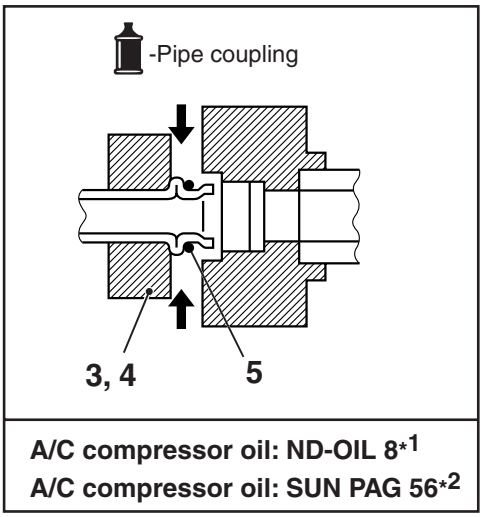

NOTE
*1: Except vehicles for Hong Kong and Singapore
*2: Vehicles for Hong Kong and Singapore

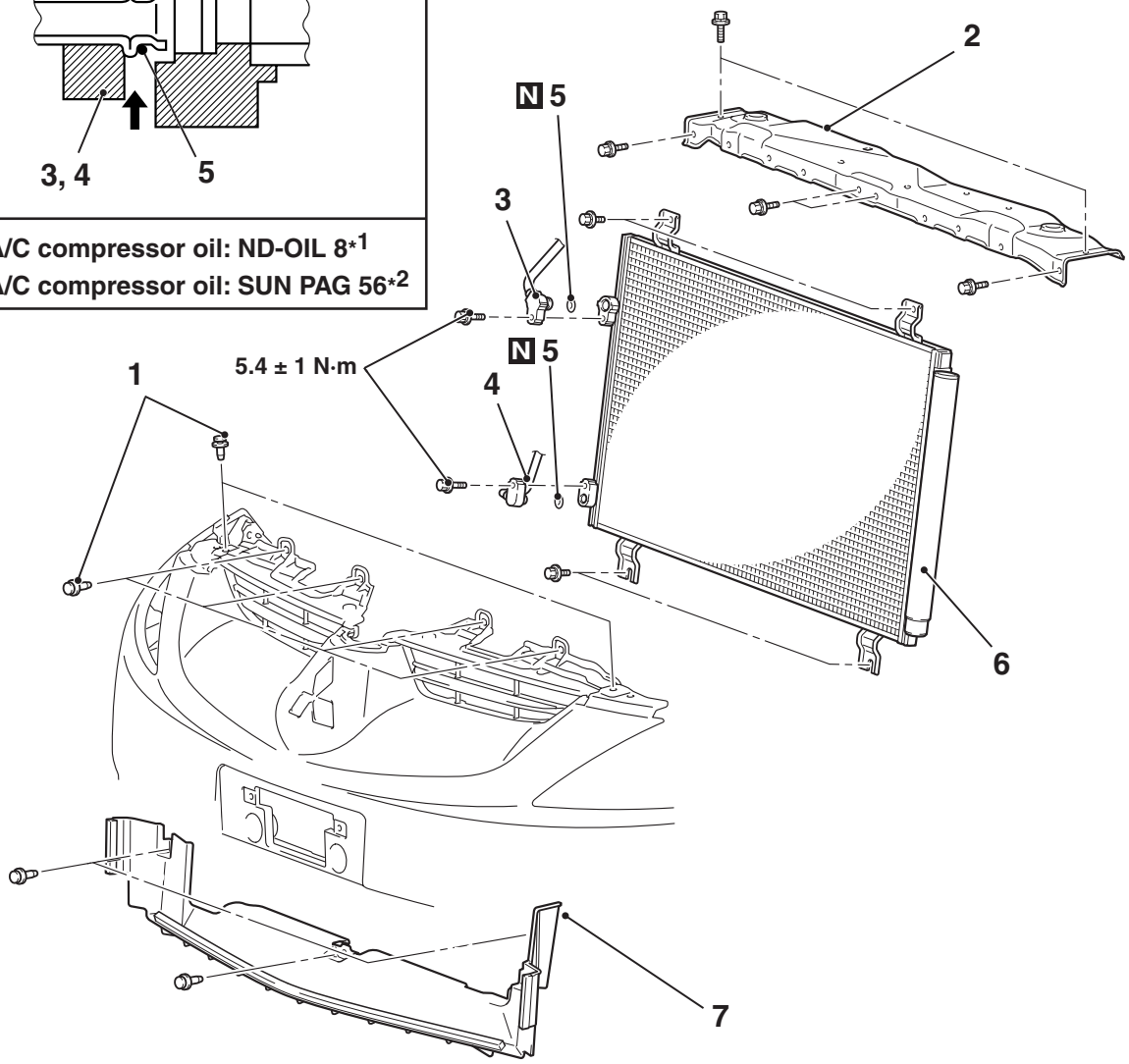

AC5022539AB

Removal steps
1. Front bumper clip
2. Front end upper bar
<<A>> 3. Flexible discharge hose connection
<<A>> 4. Liquid pipe A connection
5. O-ring
<<B>> 6. Condenser

Removal steps (Continued)
- Front bumper (Refer to GROUP 51, Front Bumper Assembly P.51-3.)

7. Air guide panel centre

NOTE: Condenser fan removal and installation (Refer to GROUP 14, Radiator P.14-27).

Main Index
Group TOC

REMOVAL SEVICE POINTS

<<A>> FLEXIBLE SUCTION HOSE AND LIQUID PIPE A REMOVAL

⚠ CAUTION

Use the plug which is not breathable because A/C compressor oil or receiver have high hygroscopicity.

Plug the removed nipple of the pipe, hose and condenser to prevent the entry of dust and dirt.

<<B>> CONDENSER ASSEMBLY REMOVAL

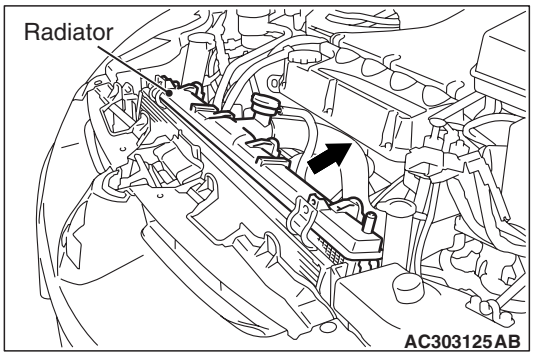

Remove the condenser while pushing the radiator towards the direction shown to make room.

INSPECTION

M1552014301696

CONDENSER FAN MOTOR CHECK

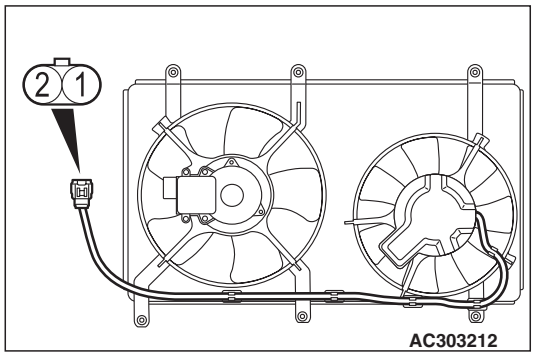

Battery connection (+) terminal	Battery connection (-) terminal	Motor operation
1	2	Rotate

Main Index
Group TOC

REFRIGERANT LINE

REMOVAL AND INSTALLATION <L.H.D. FRONT SIDE>

M1552006400996

Pre-removal and Post-installation Operation
- Refrigerant Draining and Refilling (Refer to P.55-206).

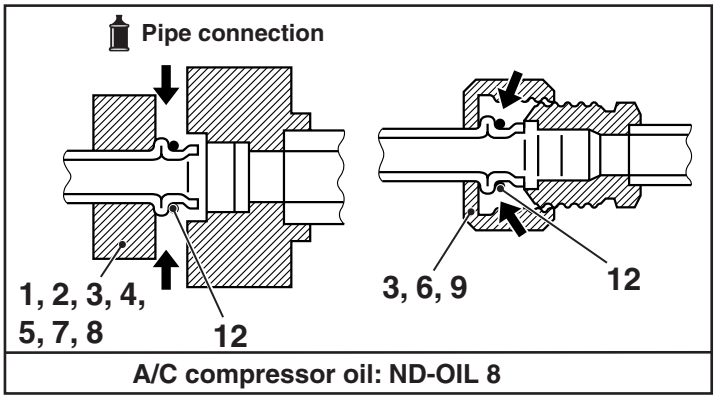

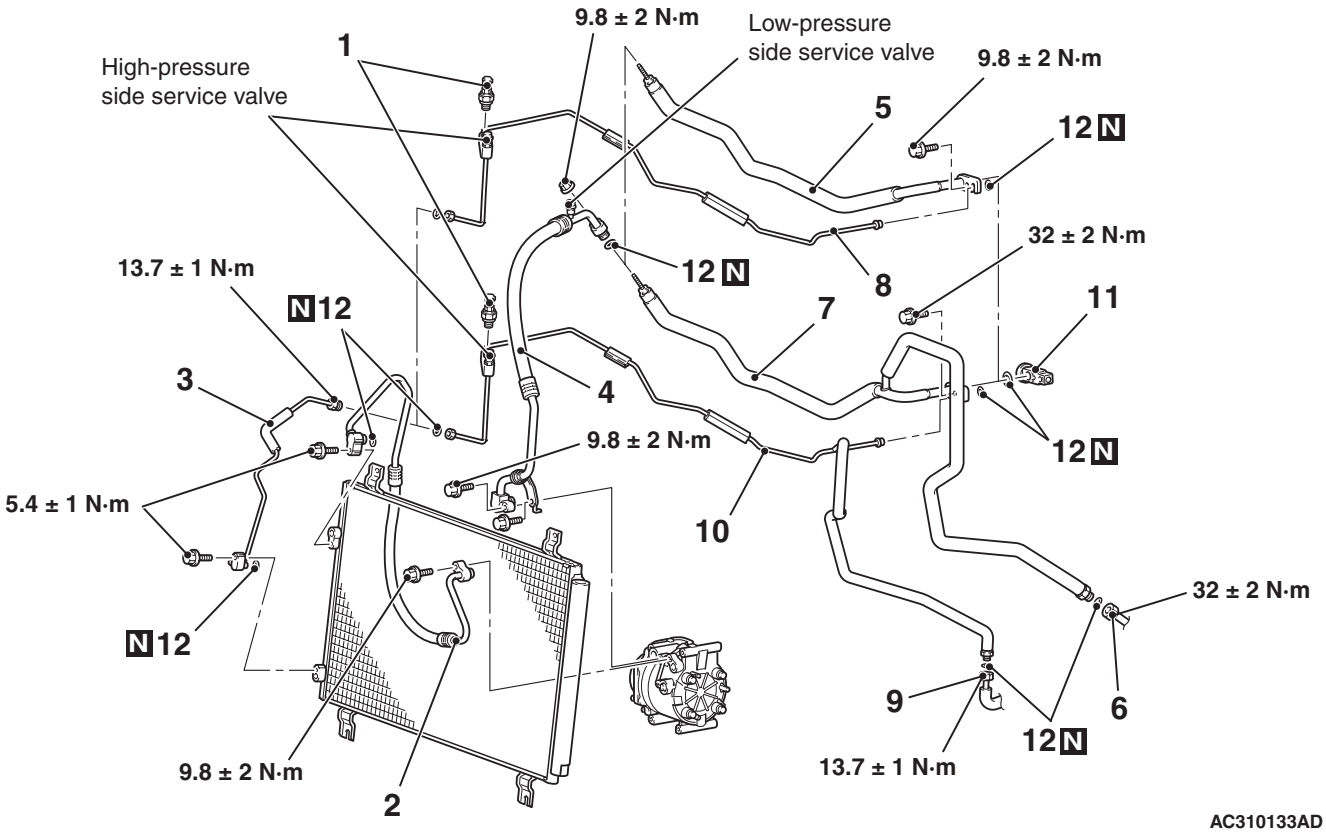

Removal steps

<<A>> 1. A/C pressure sensor
<<A>> 2. Flexible discharge hose
<<A>> 3. Liquid pipe A
<<A>> 4. Flexible suction hose
<<A>> 5. Suction pipe A <Without vehicles with rear cooler or dual automatic A/C>
<<A>> 6. Connection with suction pipe B <Vehicles with rear cooler or dual automatic A/C>

Removal steps (Continued)

<<A>> 7. Suction pipe A <Vehicles with rear cooler or dual automatic A/C>
<<A>> 8. Liquid pipe B <Without vehicles with rear cooler or dual automatic A/C>
<<A>> 9. Connection with liquid pipe C <Vehicles with rear cooler or dual automatic A/C>
<<A>> 10. Liquid pipe B <Vehicles with rear cooler or dual automatic A/C>
<<A>> 11. Expansion valve
12. O-ring

Main Index
Group TOC

REMOVAL SERVICE POINT

<<A>> HOSES AND PIPES REMOVAL

⚠ CAUTION

Use the plug which is not breathable because A/C compressor oil or receiver have high hygroscopicity.

Plug the nipple of condenser, compressor, and expansion valve to prevent the entry of dust and dirt.

Main Index
Group TOC

REMOVAL AND INSTALLATION <R.H.D. FRONT SIDE>

M1552006401007

Pre-removal and Post-installation Operation
- Refrigerant Draining and Refilling (Refer to P.55-206.)

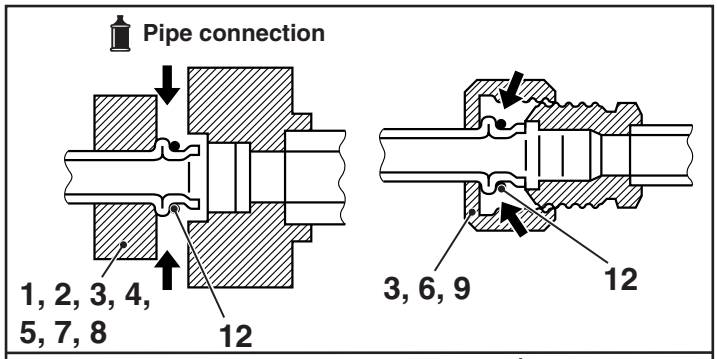

A/C compressor oil: ND-OIL 8*1
A/C compressor oil: SUN PAG 56*2

NOTE
*1: Except vehicles for Hong Kong and Singapore
*2: Vehicles for Hong Kong and Singapore

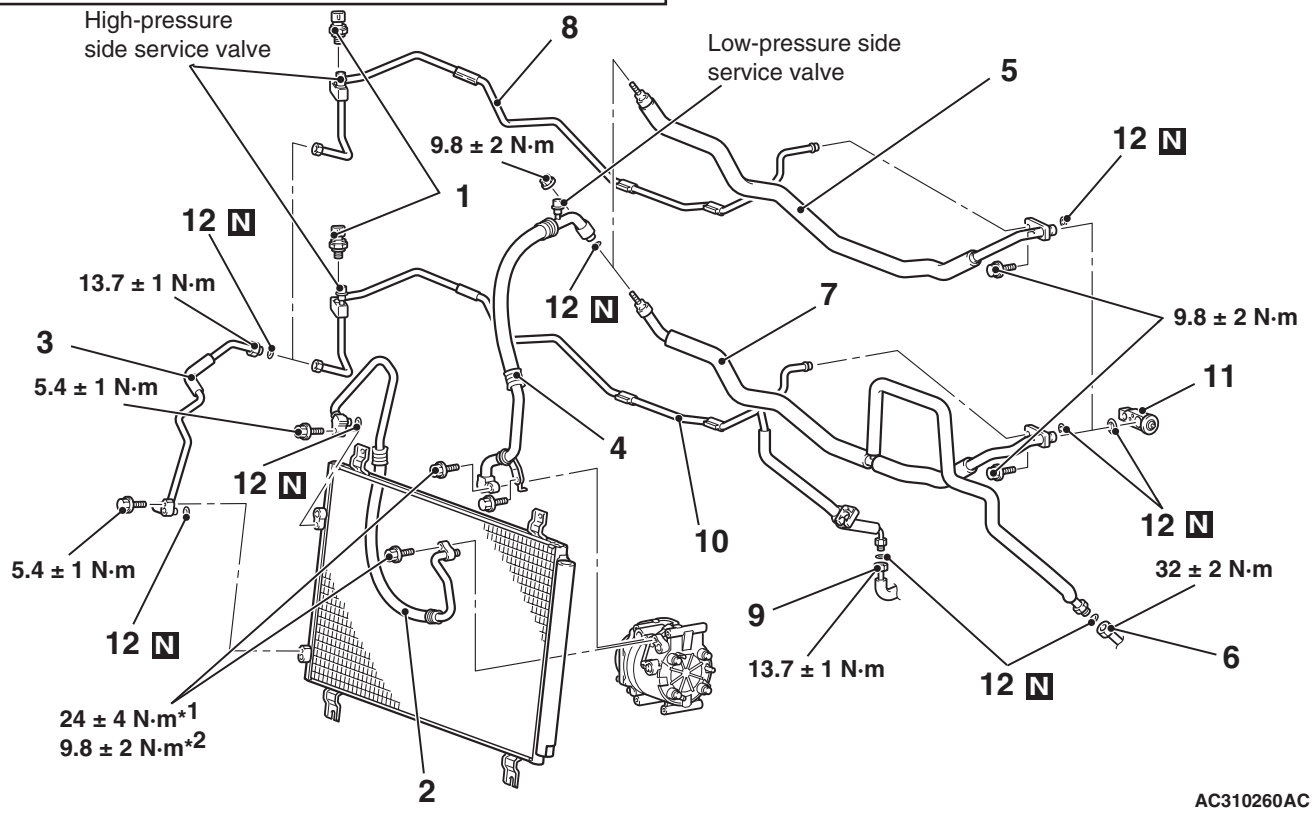

AC310260AC

Removal steps

<<A>>	1.	A/C pressure sensor
<<A>>	2.	Flexible discharge hose
<<A>>	3.	Liquid pipe A
<<A>>	4.	Flexible suction hose
<<A>>	5.	Suction pipe A <Vehicles without rear cooler and dual automatic A/C>
<<A>>	6.	Suction pipe B connection <Vehicles with rear cooler or dual automatic A/C>
<<A>>	7.	Suction pipe A <Vehicles with rear cooler or dual automatic A/C>

Removal steps (Continued)

<<A>>	8.	Liquid pipe B <Vehicles without rear cooler and dual automatic A/C>
<<A>>	9.	Liquid pipe C connection <Vehicles with rear cooler or dual automatic A/C>
<<A>>	10.	Liquid pipe B <Vehicles with rear cooler or dual automatic A/C>
<<A>>	11.	Expansion valve
	12.	O-ring

Main Index
Group TOC

REMOVAL SERVICE POINT

<<A>> HOSE/PIPE DISCONNECTION

⚠ CAUTION

As the compressor oil and receiver are highly moisture absorbent, use a non-porous material to plug the hose and nipples.

To prevent the entry of other foreign bodies, plug the condenser, compressor, and expansion valve nipples.

Main Index
Group TOC

REAR REFRIGERANT REMOVAL AND INSTALLATION <REAR SIDE>

M1552006401018

Pre-removal and Post-installation Operation
Refrigerant Draining and Refilling (Refer to P.55-206.)

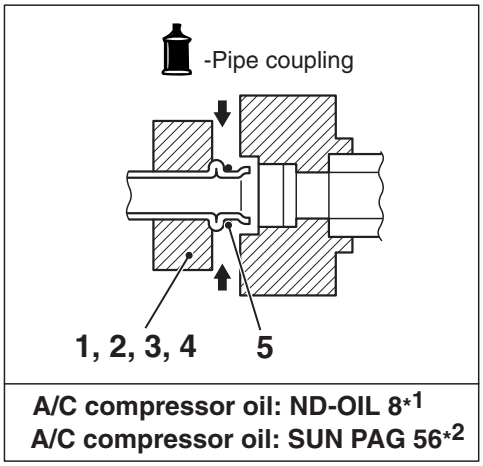

NOTE
*1: Except vehicles for Hong Kong and Singapore
*2: Vehicles for Hong Kong and Singapore

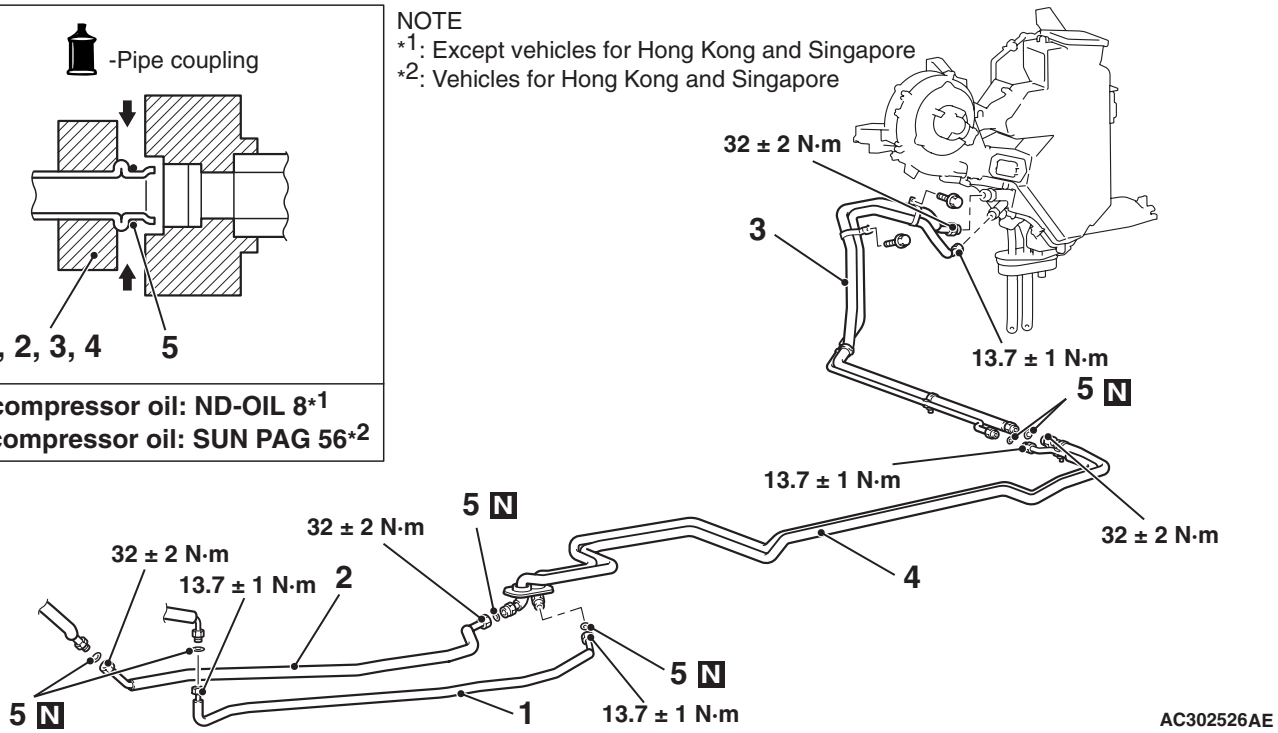

Removal steps

<<A>> 1. Liquid pipe C
<<A>> 2. Suction pipe B
- 3rd seat assembly (Refer to GROUP 52A, 3rd Seat Assembly P.52A-35.)
- Quarter trim lower (Refer to GROUP 52A, Interior Trim P.52A-10.)

Removal steps (Continued)

- Floor carpet

<<A>> 3. Rear A/C pipe B
- A/C pipe protector

<<A>> 4. Rear A/C pipe A
5. O-ring

REMOVAL SERVICE POINT

<<A>> PIPES REMOVAL

⚠ CAUTION

Use the plug which is not breathable because A/C compressor oil or receiver have high hygroscopicity.

Plug the pipe nipple to prevent the entry of dust and dirt.

Main Index
Group TOC

DUCTS

REMOVAL AND INSTALLATION

M1553001000219

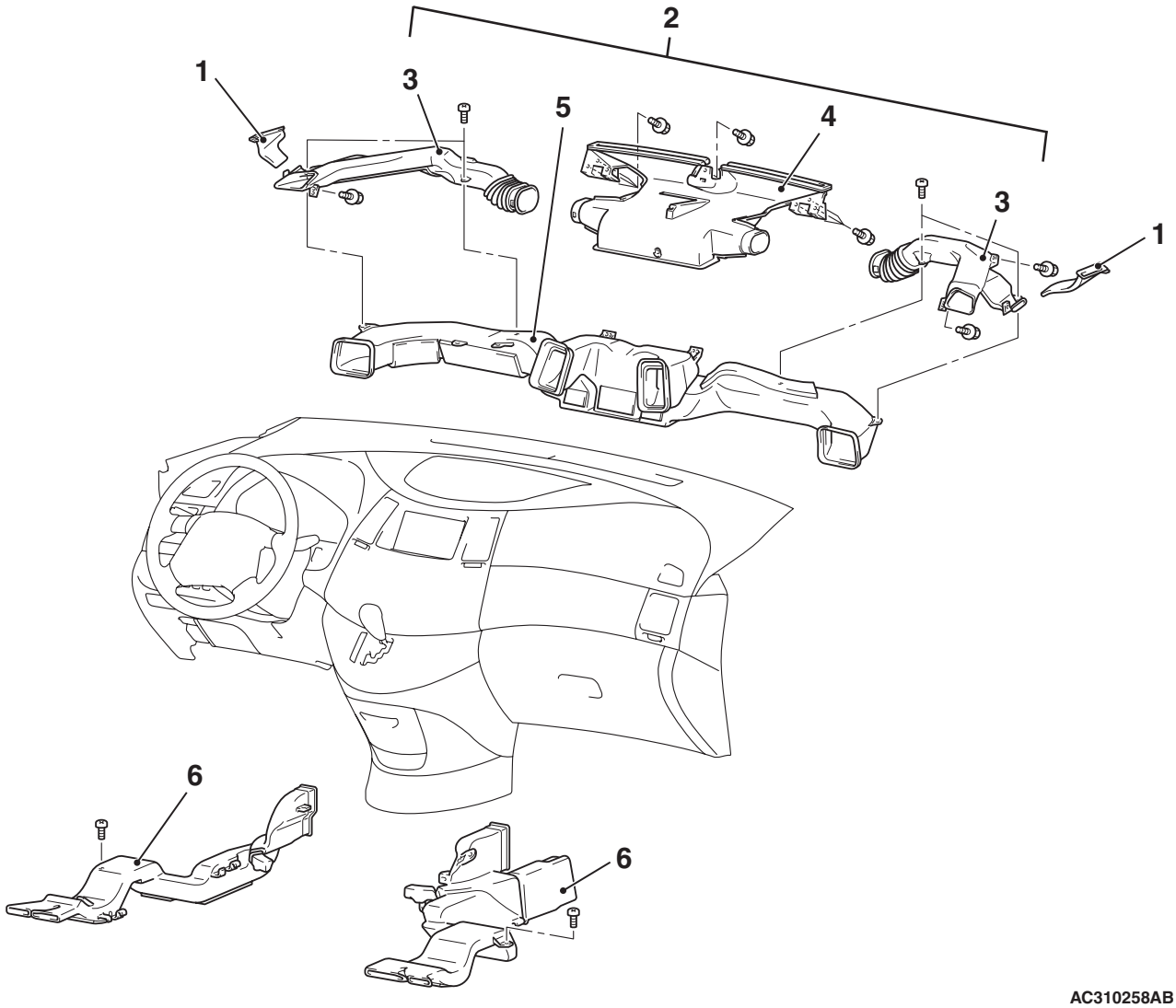

AC310258AB

Side defroster duct, defroster nozzle and ventilation air distribution duct removal steps

- Front pillar trim, cowl side trim upper (Refer to GROUP 52A, Interior Trim P.52A-10.)

1. Side defroster duct A
- Instrument panel assembly (Refer to GROUP 52A, Instrument panel P.52A-2.)

2. Defroster and distribution duct assembly
3. Side defroster duct B
4. Defroster nozzle
5. Ventilation air distribution duct

Rear heater duct removal steps

- Front scuff plate inner, cowl side trim (Refer to GROUP 52A, Interior Trim P.52A-10.)
- Selector lever, selector lever panel and glove box and lower panel and console side cover and center console (Refer to GROUP 52A, Instrument Panel P.52A-2.)
- Front seat assembly (Refer to GROUP 52A, Front Seat Assembly P.52A-21.)

6. Rear heater duct

Main Index
Group TOC

REMOVAL AND INSTALLATION

M1553001000220

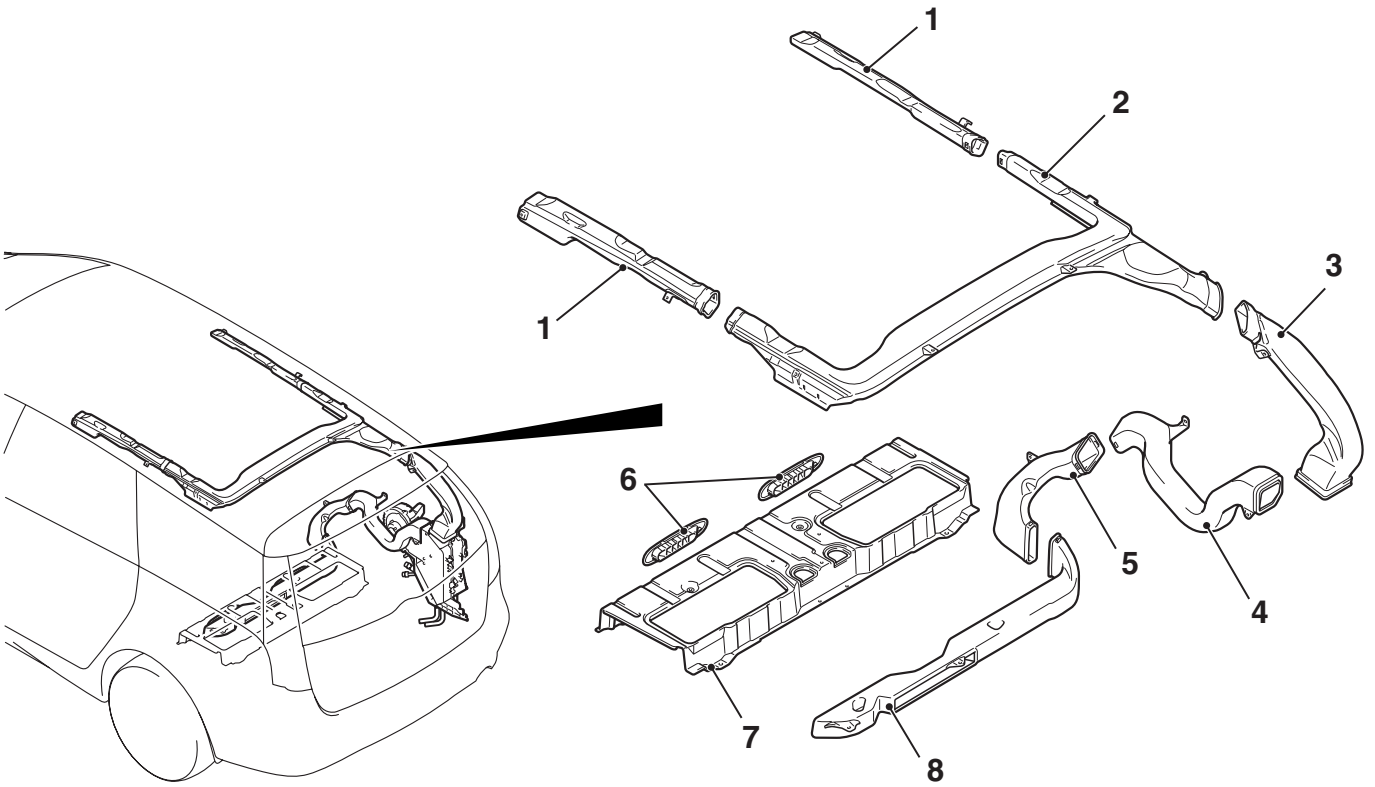

AC302509AB

Roof duct, rear pillar duct removal steps

- Front pillar trim, Centre pillar trim upper and quarter trim lower (Refer to GROUP 52A, Interior Trim P.52A-10.)
- Headlining (Refer to GROUP 52A, Headlining P.52A-17.)

1. Side roof duct
2. Centre roof duct
3. Rear pillar duct

Floor duct removal steps

- Quarter trim lower (Refer to GROUP 52A, Interior Trim P.52A-10.)
- Third seat assembly (Refer to 52A, Third Seat Assembly P.52A-35.)

4. Rear floor duct A <Rear heater or rear A/C vehicles>
5. Rear floor duct B <Rear heater or rear A/C vehicles>
6. Air outlet <Rear heater or rear A/C vehicles>
7. Seat bracket panel assembly
8. Rear floor duct C <Rear heater or rear A/C vehicles>

Main Index
Group TOC

VENTILATORS

REMOVAL AND INSTALLATION

M1553002800100
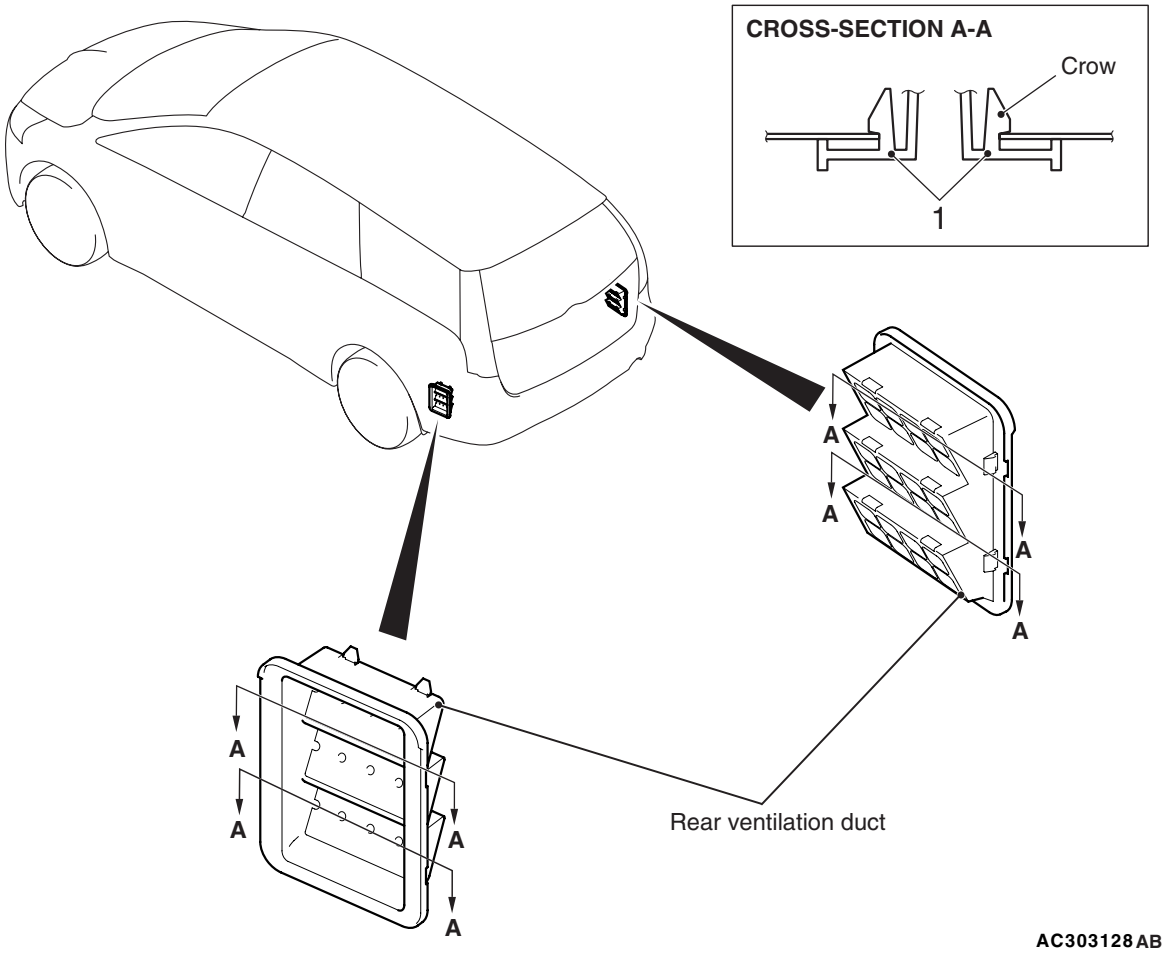
Pre-removal and Post-installation Operation
- Rear bumper removal and installation (Refer to GROUP 51, Rear Bumper P.51-8.)