GROUP 52B

SUPPLEMENTAL RESTRAINT SYSTEM (SRS)

CONTENTS

GENERAL INFORMATION 52B-3

SERVICE PRECAUTIONS. 52B-5

SPECIAL TOOLS. 52B-9

TEST EQUIPMENTS 52B-11

TROUBLESHOOTING <Vehicles without dual stage air bags> 52B-11

- DIAGNOSIS TROUBLESHOOTING FLOW 52B-11
- DIAGNOSIS FUNCTION. 52B-11
- SRS WARNING LAMP CHECK 52B-11
- CHECK CHART FOR DIAGNOSIS CODES 52B-11
- DIAGNOSTIC TROUBLE CODE PROCEDURES. 52B-16
- CHECK CHART FOR TROUBLE SYMPTOMS 52B-157
- SYMPTOM PROCEDURES 52B-158
- DATA LIST REFERENCE TABLE. 52B-163
- ACTUATOR TEST REFERENCE TABLE 52B-163

TROUBLESHOOTING <Vehicles with dual stage air bags> 52B-163

- DIAGNOSIS TROUBLESHOOTING FLOW 52B-163
- DIAGNOSIS FUNCTION 52B-163
- SRS WARNING LAMP CHECK 52B-163
- CHECK CHART FOR DIAGNOSIS CODES 52B-164
- DIAGNOSTIC TROUBLE CODE PROCEDURES 52B-169
- CHECK CHART FOR TROUBLE SYMPTOMS 52B-316
- SYMPTOM PROCEDURES 52B-317
- DATA LIST REFERENCE TABLE. 52B-322
- ACTUATOR TEST REFERENCE TABLE . . 52B-322
- FAIL-SAFE FUNCTION. 52B-322

Continued on next page

⚠ WARNING

- ***Carefully read and observe the information in the SERVICE PRECAUTIONS (P.52B-5) prior to any service.***
- ***For information concerning diagnosis or maintenance, always observe the procedures in the SRS Diagnosis or the SRS Maintenance sections, respectively.***
- ***If any SRS components are removed or replaced in connection with any service procedures, be sure to follow the procedures in the INDIVIDUAL COMPONENT SERVICE section (P.52B-477) for the comportments involved.***
- ***If you have any questions about the SRS, please contact your local distributor.***

Main Index
Group TOC

POST-COLLISION DIAGNOSIS 52B-323

INDIVIDUAL COMPONENT SERVICE 52B-327

WARNING/CAUTION LABELS 52B-328

FRONT IMPACT SENSORS 52B-330
REMOVAL AND INSTALLATION 52B-330
INSPECTION 52B-331

SRS CONTROL UNIT (SRS-ECU). . . 52B-332
REMOVAL AND INSTALLATION 52B-332
INSPECTION 52B-333

DRIVER'S, FRONT PASSENGER'S AIR BAG MODULES AND CLOCK SPRING 52B-334
REMOVAL AND INSTALLATION 52B-334
INSPECTION 52B-340

SIDE AND CURTAIN AIR BAG MODULES. 52B-342
REMOVAL AND INSTALLATION 52B-342
INSPECTION. 52B-346

SIDE IMPACT SENSOR 52B-347
REMOVAL AND INSTALLATION 52B-347
INSPECTION. 52B-349

SEAT BELTS WITH PRE-TENSIONER. 52B-350
REMOVAL AND INSTALLATION 52B-350
INSPECTION. 52B-352

SEAT SLIDE SENSOR <Vehicles with dual stage air bags> 52B-353
REMOVAL AND INSTALLATION 52B-353
INSPECTION. 52B-355

AIR BAG MODULE AND SEAT BELT PRE-TENSIONER DISPOSAL PROCEDURES 52B-356

Main Index
Group TOC

GENERAL INFORMATION

M1524000100893

- The Supplemental Restraint System (SRS) and seat belt with pre-tensioner is designed to supplement the driver's and front passenger's seat belts to help reduce the risk or severity of injury to the driver and front passenger by activating and deploying both front air bags in certain frontal collisions.The SRS and seat belt pre-tensioner systems consist of air bag modules, SRS-ECU, two front impact sensors, four side impact sensors, SRS warning lamp, clock spring, seat slide sensor and seat belt pre-tensioner. Air bag modules are installed at the centre of the steering wheel, on the globe box, front seatback and the roof-side area (from the front pillars of driver- and passenger-side to the rear pillar in rear area of vehicle). Each air bag has a safing folded air bag and an inflator. SRS-ECU, installed at the depths of the centre console, monitors the system. The front impact sensor is assembled in the radiator support panel to monitor collision upon frontal impact. The side impact sensor is assembled in the center pillar and quarter panel lower to monitor collision upon side impact <Vehicles with side and curtain air bags>. The warning lamp on the instrument panel indicates the operational status of the SRS. The clock spring is installed in the steering column. The seat belt pre-tensioner is incorporated in the seat belt retractor.
- On vehicles for Hong Kong, Singapore, Australia and New Zealand, dual stage air bag system has been adopted to both driver and front passenger sides. This is consisted of the front impact sensor, seat slide sensor, SRS-ECU and dual stage inflator. Air bag is deployed in two stages according to the strength of impact received.The seat slide sensor is attached to the seat rail and provides the air bag control unit with information on the seat position.
- Only authorized service personnel should do work on or around the SRS components. Those service personnel should read this manual carefully before starting any such work.

Dual stage air bags
<Vehicles for Hong Kong, Singapore, Australia and New Zealand>

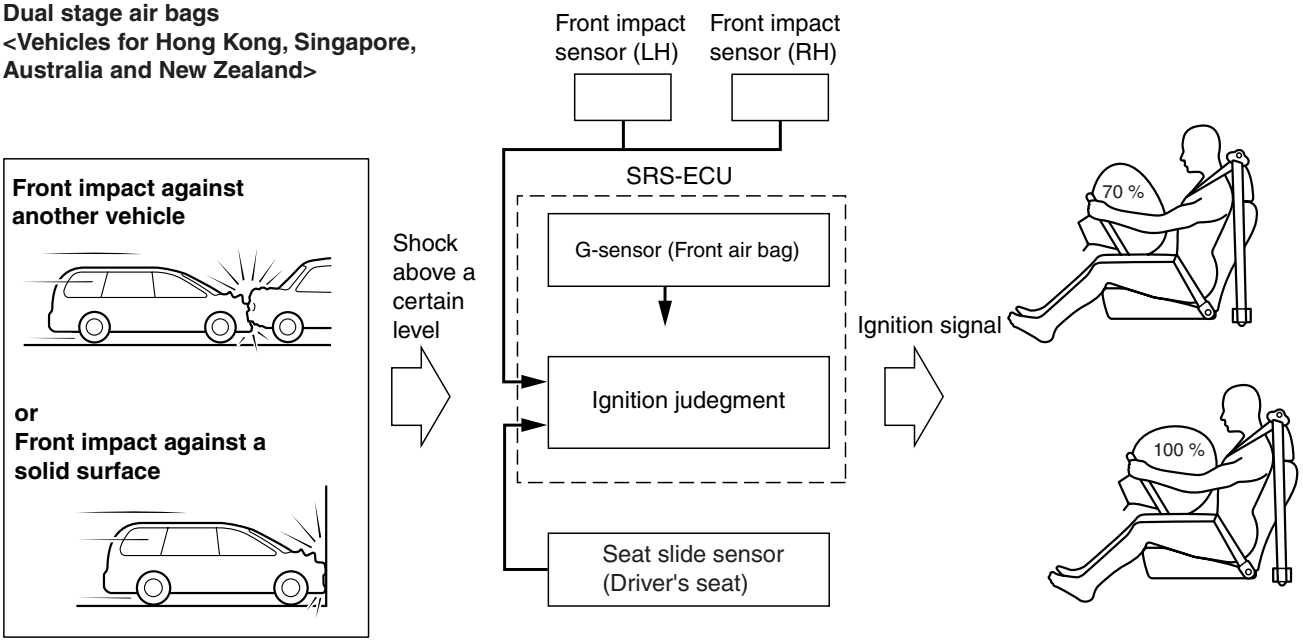

AC500365AC

Main Index
Group TOC

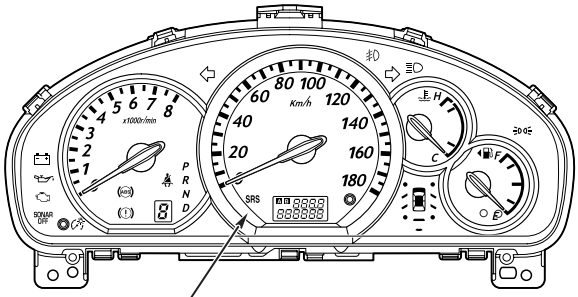

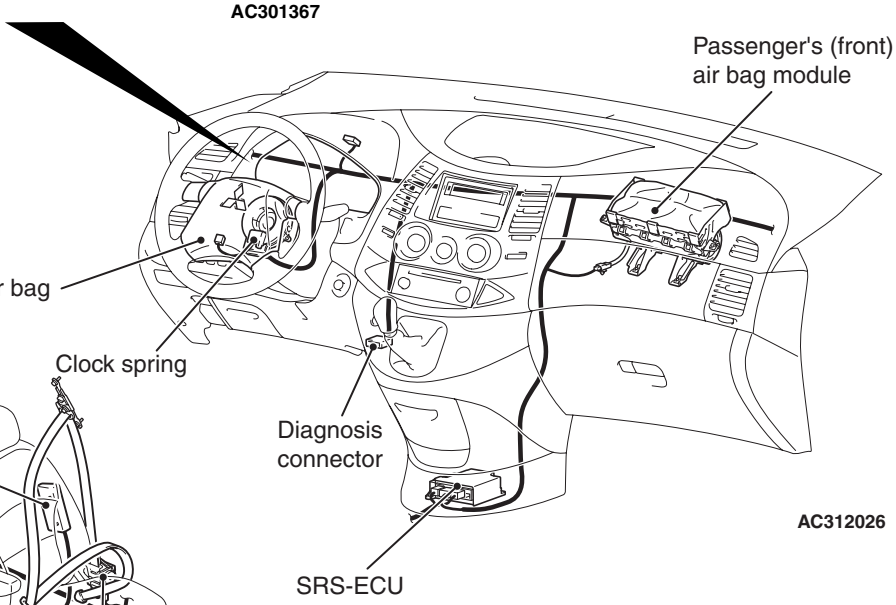

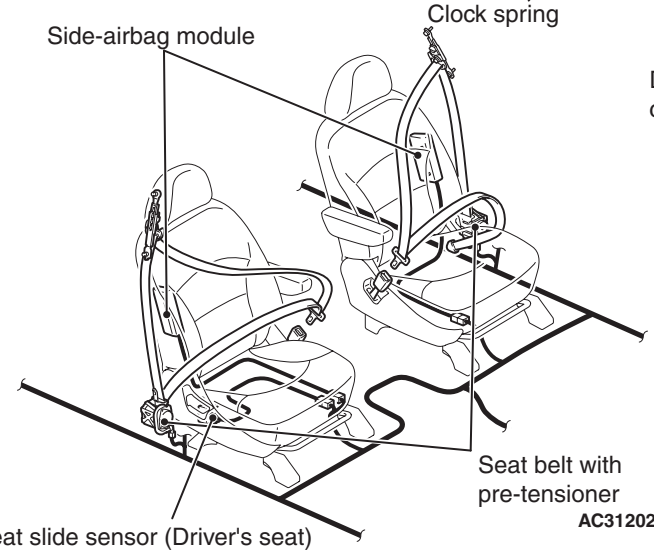

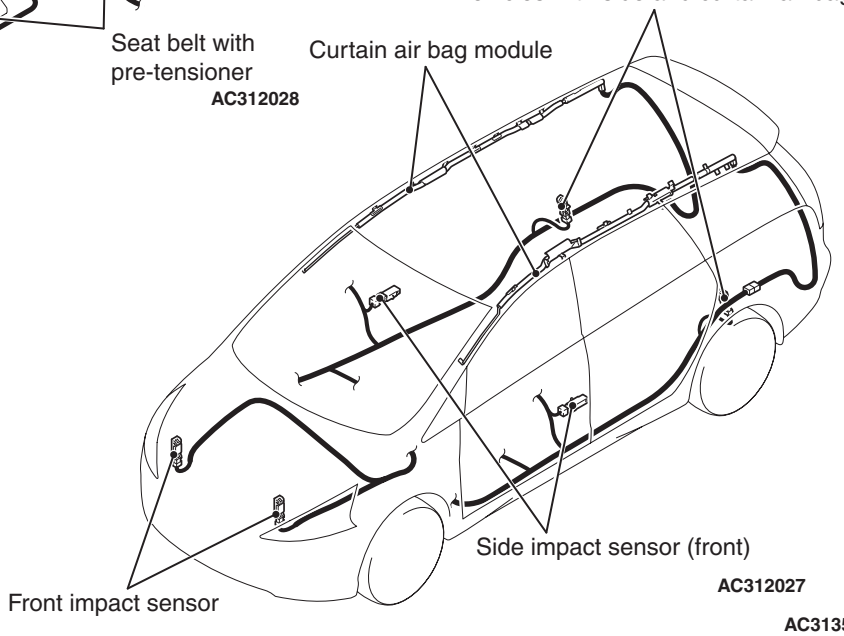

AC313560AC

Main Index
Group TOC

SERVICE PRECAUTIONS

M1524000300864

⚠ DANGER

In order to avoid injury to yourself or others from accidental deployment of the air bag during servicing, read and carefully follow all the precautions and procedures described in this manual.

⚠ CAUTION

- **Do not use any electrical test equipment on or near SRS components, except those specified on P.52B-11.**
- **Never Attempt to Repair the Following Components:**
  - **SRS air bag control unit (SRS-ECU)**
  - **Clock spring**
  - **Driver's and front passenger's (front) air bag modules**
  - **Side-airbag module**
  - **Curtain air bag module**
  - **Front impact sensor**
  - **Side impact sensor**
  - **Seat belt with pre-tensioner**
  - **Seat slide sensor <Vehicles for Hong Kong, Singapore, Australia and New Zealand>**

NOTE: If any of these components are diagnosed as faulty, they should only be replaced, in accordance with the INDIVIDUAL COMPONENTS SERVICE procedures in this manual, starting at page P.52B-327.

⚠ CAUTION

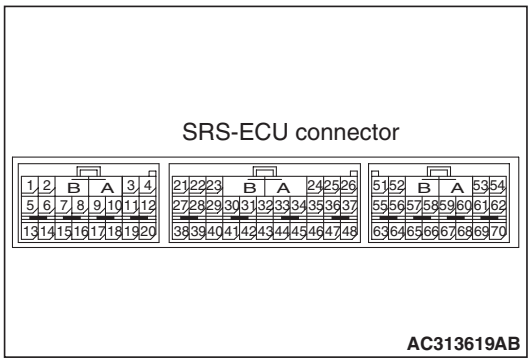

Do not attempt to repair the wiring harness connectors of the SRS. If a defective wiring harness is found, repair or replace it by referring to the table below.

<Except vehicles for Hong Kong, singapore, Australia and New Zealand>

SRS-ECU terminal No.	Destination of harness	Remedy
5, 6	Floor wiring harness→Curtain air bag module (LH)	Correct or replace the floor wiring harness.
7, 8	Floor wiring harness→Seat belt pre-tensioner (LH)	Correct or replace the floor wiring harness.
9, 10	Floor wiring harness→Side-airbag module (LH)	Correct or replace the floor wiring harness.
15, 16	Floor wiring harness→Side impact sensor (rear) (LH)	Correct or replace the floor wiring harness.
19, 20	Floor wiring harness→Side impact sensor (front) (LH)	Correct or replace the floor wiring harness.
23	Instrument panel wiring harness → Junction block (fuse No.3)	Correct or replace the instrument panel wiring harness.
24	Instrument panel wiring harness → Junction block (fuse No.2)	Correct or replace the instrument panel wiring harness.

Main Index
Group TOC

SRS-ECU terminal No.	Destination of harness	Remedy
27, 28	Instrument panel wiring harness → Passenger's (Front) air bag module	Correct or replace the instrument panel wiring harness.
32	Instrument panel wiring harness → Can_H line	Correct or replace the can line.
36, 37	Instrument panel wiring harness → Clock spring→Driver's air bag module	Correct or replace instrument panel wiring harness. Replace the clock spring.
38, 39	Front wiring harness→Instrument panel wiring harness →Front impact sensor (LH)	Correct or replace each wiring harness.
40	Instrument panel wiring harness → Earth	Correct or replace the instrument panel wiring harness.
43	Instrument panel wiring harness → Can_L line	Correct or replace the can line.
47, 48	Front wiring harness→Instrument panel wiring harness→Front impact sensor (RH)	Correct or replace each wiring harness.
57, 58	Floor wiring harness→Side-airbag module (RH)	Correct or replace the floor wiring harness.
59, 60	Floor wiring harness→Seat belt pre-tensioner (RH)	Correct or replace the floor wiring harness.
61, 62	Floor wiring harness→Curtain air bag module (RH)	Correct or replace the floor wiring harness.
63, 64	Floor wiring harness→Side impact sensor (front) (RH)	Correct or replace the floor wiring harness.
67, 68	Floor wiring harness→Side impact sensor (rear) (RH)	Correct or replace the floor wiring harness.

<Vehicles for Hong Kong, singapore, Australia and New Zealand>

SRS-ECU terminal No.	Destination of harness	Remedy
1, 2	Floor wiring harness→Seat slide sensor	Correct or replace the floor wiring harness.
5, 6	Floor wiring harness→Curtain air bag module (LH)	Correct or replace the floor wiring harness.
7, 8	Floor wiring harness→Seat belt pre-tensioner (LH)	Correct or replace the floor wiring harness.
9, 10	Floor wiring harness→Side-airbag module (LH)	Correct or replace the floor wiring harness.
15, 16	Floor wiring harness→Side impact sensor (rear) (LH)	Correct or replace the floor wiring harness.
19, 20	Floor wiring harness→Side impact sensor (front) (LH)	Correct or replace the floor wiring harness.
23	Instrument panel wiring harness → Junction block (fuse No.3)	Correct or replace the instrument panel wiring harness.

Main Index
Group TOC

SRS-ECU terminal No.	Destination of harness	Remedy
24	Instrument panel wiring harness → Junction block (fuse No.2)	Correct or replace the instrument panel wiring harness.
27, 28	Instrument panel wiring harness → Passenger's (front) air bag module <1st squib side>	Correct or replace the instrument panel wiring harness.
30, 31	Instrument panel wiring harness → Passenger's (front) air bag module <2nd squib side>	Correct or replace the instrument panel wiring harness.
32	Instrument panel wiring harness → Can_H line	Correct or replace the can line.
33, 34	Instrument panel wiring harness → Clock spring→Driver's air bag module <2nd squib side>	Correct or replace instrument panel wiring harness. Replace the clock spring.
36, 37	Instrument panel wiring harness → Clock spring→Driver's air bag module <1st squib side>	Correct or replace instrument panel wiring harness. Replace the clock spring.
38, 39	Front wiring harness→Instrument panel wiring harness→Front impact sensor (LH)	Correct or replace each wiring harness.
40	Instrument panel wiring harness → Earth	Correct or replace the instrument panel wiring harness.
43	Instrument panel wiring harness → Can_L line	Correct or replace the can line.
47, 48	Front wiring harness→Instrument panel wiring harness→Front impact sensor (RH)	Correct or replace each wiring harness.
57, 58	Floor wiring harness→Side-airbag module (RH)	Correct or replace the floor wiring harness.
59, 60	Floor wiring harness→Seat belt pre-tensioner (RH)	Correct or replace the floor wiring harness.
61, 62	Floor wiring harness→Curtain air bag module (RH)	Correct or replace the floor wiring harness.
63, 64	Floor wiring harness→Side impact sensor (front) (RH)	Correct or replace the floor wiring harness.
67, 68	Floor wiring harness→Side impact sensor (rear) (RH)	Correct or replace the floor wiring harness.

Main Index
Group TOC

⚠ DANGER

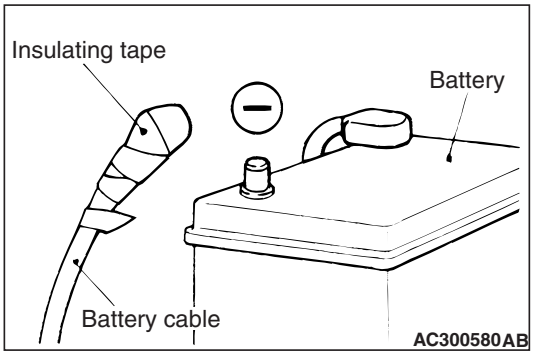

After disconnecting the battery cable, wait 60 seconds or more before proceeding with the following work. In addition, insulate the negative battery terminal with a tape. The condenser inside the SRS-ECU is designed to retain enough voltage to deploy the air bag for a short time even after the battery has been disconnected, so serious injury may result from unintended air bag deployment if work is done on the SRS system immediately after the battery cables are disconnected.

⚠ CAUTION

- **The SRS components and seat belt with pre-tensioner should not be subjected to heat, so remove the SRS-ECU, driver's and passenger's (front) air bag modules, clock spring, side-airbag modules, seat slide sensor and seat belt pre-tensioner before drying or baking the vehicle after painting.**
  - **SRS-ECU, air bag modules, clock spring, impact sensors, seat slide sensor: 93° C or more**
  - **Seat belt with pre-tensioner: 90° C or more**
- **Whenever you finish servicing the SRS, always erase the diagnosis code and check warning lamp operation to make sure that the system functions properly.**

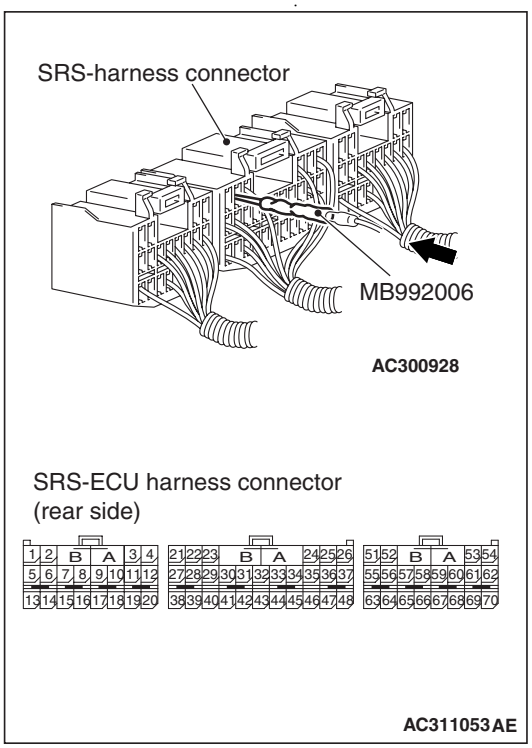

If checks are carried out by using the SRS-ECU harness connector, observe the following procedures: Insert the special tool (extra fine probe) MB992006 into connector from harness side (rear side), and connect the tester to this probe. If any tool than special tool is used, damage to the harness and other components will result. Never insert the probe directly to the terminals from the front of the connector. The terminals are plated to increase their conductivity, so that if they are touched directly by the probe, the plating may break, which will cause drops in reliability.

Main Index
Group TOC

SPECIAL TOOLS

M1524000700817

Tool	No.	Name	Application
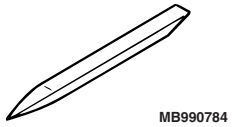 MB990784	MB990784	Ornament remover	Removal of cover.
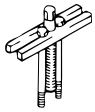 MB990803	MB990803	Steering wheel puller	Steering wheel disconnection
A 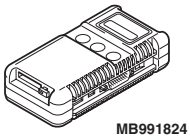 MB991824 B 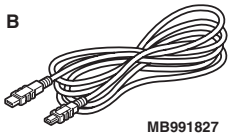 MB991827 C 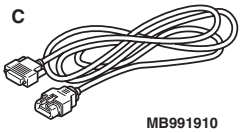 MB991910 D 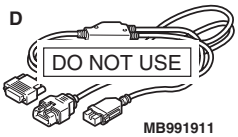 MB991911 E 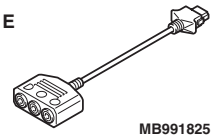 MB991825 F 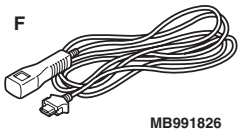 MB991826 MB991955	MB991955 A: MB991824 B: MB991827 C: MB991910 D: MB991911 E: MB991825 F: MB991826	M.U.T.-III sub-assembly A: Vehicle communication interface (V. C. I.) B: M.U.T.-III USB cable C: M.U.T.-III main harness A (applicable to vehicles with CAN communication) D: M.U.T.-III main harness B (applicable to vehicles without CAN communication) E: M.U.T.-III Measure adapter F: M.U.T.-III Trigger harness	Checking diagnosis code **⚠ CAUTION** **For vehicles with CAN communication, use M.U.T.-III main harness A to send simulated vehicle speed. If you connect M.U.T.-III main harness B instead, the CAN communication does not function correctly.**
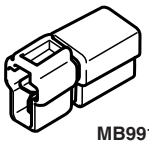 MB991865	MB991865	Dummy resistor	SRS air bag and seat belt with pre-tensioner circuit check
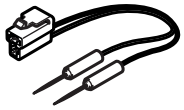 MB991866	MB991866	Resistor harness	SRS air bag circuit check

Main Index
Group TOC

Tool	No.	Name	Application
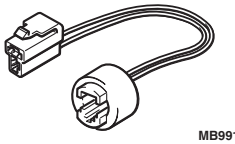 MB991884	MB991884	Resistor harness (For Pre-tensioner)	Seat belt with pre-tensioner and curtain air bag circuit check
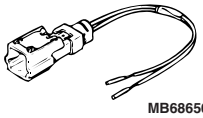 MB686560	MB686560	SRS air bag adapter harness	• Deployment of passenger's (front) air bag module or side-airbag module inside the vehicle • Deployment of passenger's (front) air bag module or side-airbag module outside the vehicle
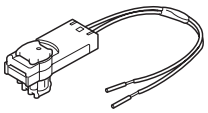 MB991885	MB991885	Pre-tensioner adapter harness	• Deployment of seat belt with pre-tensioner and curtain air bag inside the vehicle • Deployment of seat belt with pre-tensioner and curtain air bag outside the vehicle
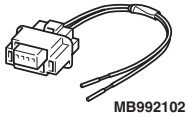 MB992102	MB992102	Air bag inflation adapter harness	Deployment of driver’s air bag module outside the vehicle
A B 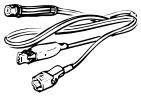 C 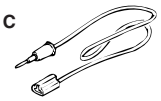 D DO NOT USE MB991223AZ	MB991223 A: MB991219 B: MB991220 C: MB991221 D: MB991222	Harness set A: Check harness B: LED harness C: LED harness adapter D: Probe	Checking the continuity and measuring the voltage at the SRS-ECU harness connector
MB992006	MB992006	Extra fine probe	Continuity check and voltage measurement at harness wire or connector

Main Index
Group TOC

TEST EQUIPMENTS

M1524000800375

Tool	Name	Application
AC300683	Digital multi-meter	Checking SRS electrical circuitry (Use multi-meter for which the maximum test current is 2 mA or less at minimum range of resistance measurement

TROUBLESHOOTING
<Vehicles without dual stage air bags>

DIAGNOSIS TROUBLESHOOTING FLOW

M1524003100524

Refer to GROUP 00, How to Use Troubleshooting/Inspection Service PointsP.00-5.

DIAGNOSIS FUNCTION

M1524003200446

HOW TO READ DIAGNOSIS CODE

Refer to GROUP 00, How to Use Troubleshooting/Inspection Service Points P.00-5.

HOW TO ERASE DIAGNOSIS CODE

Refer to GROUP 00, How to Use Troubleshooting/Inspection Service Points P.00-5.

SRS WARNING LAMP CHECK

M1524004300479

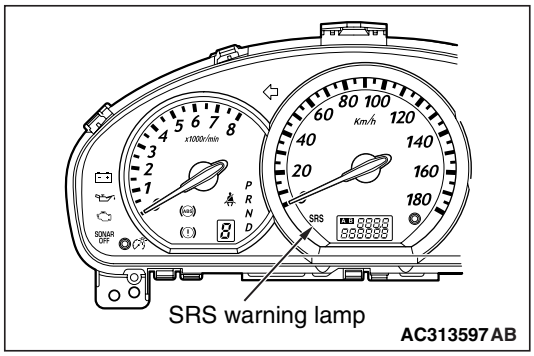

1. Check that the SRS warning lamp comes on when the ignition switch is turned ON.
2. Check that the SRS warning lamp illuminates for about 7 seconds and then goes out.
3. If this is not the cause, check the diagnosis codes.

CHECK CHART FOR DIAGNOSIS CODES

M1524003301004

Inspect according to the inspection chart that is appropriate for the diagnosis code.

Code No.	Diagnosis item	Reference Page
B1400*3	Driver's air bag module (1st squib) system fault 1 (short circuit between terminals of the squib circuit)	P.52B-16
B1401*3	Driver's air bag module (1st squib) system fault 2 (open in the squib circuit)	P.52B-22
B1402*3	Driver's air bag module (1st squib) system fault for earth circuit (short-circuited to earth)	P.52B-26
B1403*3	Driver's air bag module (1st squib) system fault for power supply circuit (short-circuited to power supply)	P.52B-30
B1404*4	Driver's air bag module (ignition drive circuit) system detected short circuit	P.52B-34
B1405*4	Driver's air bag module (ignition drive circuit) system detected open circuit	P.52B-34
B1406*4	Front impact sensor (RH) system for fault 1	P.52B-36

Main Index
Group TOC

Code No.	Diagnosis item	Reference Page
B1407*3	Front impact sensor (RH) power supply circuit system	P.52B-37
B1408*3	Front impact sensor (RH) (squib) for power supply circuit	P.52B-39
B1409*3	Front impact sensor (RH) (squib) for communication system	P.52B-39
B1410*3	Passenger's (front) air bag module (1st squib) system fault 1 (short circuit between terminals of the squib circuit)	P.52B-42
B1411*3	Passenger's (front) air bag module (1st squib) system fault 2 (open in the squib circuit)	P.52B-47
B1412*3	Passenger's (front) air bag module (1st squib) system fault for earth circuit (short-circuited to earth)	P.52B-50
B1413*3	Passenger's (front) air bag module (1st squib) system fault for power supply circuit (short-circuited to power supply)	P.52B-53
B1414*4	Passenger's (front) air bag module (ignition drive circuit) system detected short circuit	P.52B-34
B1415*4	Passenger's (front) air bag module (ignition drive circuit) system detected open circuit	P.52B-34
B1416*4	Front impact sensor (LH) system for fault 1	P.52B-36
B1417*3	Front impact sensor (LH) power supply circuit system	P.52B-56
B1418*3	Front impact sensor (LH) (squib) for power supply circuit	P.52B-58
B1419*3	Front impact sensor (LH) (squib) for communication system	P.52B-58
B1420*3	Side-airbag module (RH) (squib) system fault 1 (short circuit between terminals of the squib circuit)	P.52B-61
B1421*3	Side-airbag module (RH) (squib) system fault 2 (open in the squib circuit)	P.52B-64
B1422*3	Side-airbag module (RH) (squib) system fault earth circuit (short-circuited to earth)	P.52B-67
B1423*3	Side-airbag module (RH) (squib) system fault power supply circuit (short-circuited to power supply)	P.52B-69
B1424*4	Side-airbag module (RH) (squib) system detected short circuit	P.52B-34
B1425*4	Side-airbag module (RH) (squib) system detected open circuit	P.52B-34
B1426*4	Side impact sensor (front) (RH) system for fault 1	P.52B-71
B1427*3	Side impact sensor (front) (RH) power supply circuit system	P.52B-72
B1428*3	Side impact sensor (front) (RH) (squib) for power supply circuit	P.52B-74
B1429*3	Side impact sensor (front) (RH) (squib) for communication system	P.52B-74
B1430*3	Side-airbag module (LH) (squib) system fault 1 (short circuit between terminals of the squib circuit)	P.52B-76
B1431*3	Side-airbag module (LH) (squib) system fault 2 (open in the squib circuit)	P.52B-79
B1432*3	Side-airbag module (LH) (squib) system fault earth circuit (short-circuited to earth)	P.52B-82

Main Index
Group TOC

Code No.	Diagnosis item	Reference Page
B1433*3	Side-airbag module (LH) (squib) system fault power supply circuit (short-circuited to power supply)	P.52B-84
B1434*4	Side-airbag module (LH) (squib) system fault 3 for ignition drive circuit	P.52B-34
B1435*4	Side-airbag module (LH) (squib) system fault 4 for ignition drive circuit	P.52B-34
B1436*4	Side impact sensor (front) (LH) system for fault 1	P.52B-71
B1437*3	Side impact sensor (front) (LH) power supply circuit system	P.52B-87
B1438*3	Side impact sensor (front) (LH) (squib) for power supply circuit	P.52B-89
B1439*3	Side impact sensor (front) (LH) (squib) for communication system	P.52B-89
B1440*3	Curtain air bag module (squib) (RH) system (short-circuited between terminals of the squib circuit)	P.52B-91
B1441*3	Curtain air bag module (squib) (RH) system (open-circuited in the squib circuit)	P.52B-95
B1442*3	Curtain air bag module (squib) (RH) system (short-circuited to the earth)	P.52B-98
B1443*3	Curtain air bag module (squib) (RH) system (short-circuited to the power supply)	P.52B-100
B1444*4	Curtain air bag module (RH) (squib) system fault 3 for ignition drive circuit	P.52B-34
B1445*4	Curtain air bag module (RH) (squib) system fault 4 for ignition drive circuit	P.52B-34
B1446*4	Side impact sensor (rear) (RH) system for fault 1	P.52B-103
B1447*3	Side impact sensor (rear) (RH) power supply circuit system	P.52B-104
B1448*3	Side impact sensor (rear) (RH) (squib) for power supply circuit	P.52B-106
B1449*3	Side impact sensor (rear) (RH) (squib) for communication system	P.52B-106
B1450*3	Curtain air bag module (squib) (LH) system (short-circuited between terminals of the squib circuit)	P.52B-108
B1451*3	Curtain air bag module (squib) (LH) system (open-circuited in the squib circuit)	P.52B-112
B1452*3	Curtain air bag module (squib) (LH) system (short-circuited to the earth)	P.52B-115
B1453*3	Curtain air bag module (squib) (LH) system (short-circuited to the power supply)	P.52B-117
B1454*4	Curtain air bag module (LH) (squib) system fault 3 for ignition drive circuit	P.52B-34
B1455*4	Curtain air bag module (LH) (squib) system fault 4 for ignition drive circuit	P.52B-34
B1456*4	Side impact sensor (rear) (LH) system for fault 1	P.52B-103
B1457*3	Side impact sensor (rear) (LH) power supply circuit system	P.52B-120

Main Index
Group TOC

Code No.	Diagnosis item	Reference Page
B1458*3	Side impact sensor (rear) (LH) (squib) for power supply circuit	P.52B-122
B1459*3	Side impact sensor (rear) (LH) (squib) or communication system	P.52B-122
B1460*3	Seat belt pre-tensioner (RH) (squib) system fault 1 (short circuit between terminals of the squib circuit)	P.52B-124
B1461*3	Seat belt pre-tensioner (RH) (squib) system fault 2 (open in the squib circuit)	P.52B-128
B1462*3	Seat belt pre-tensioner (RH) (squib) system fault for earth circuit (short-circuit to earth)	P.52B-131
B1463*3	Seat belt pre-tensioner (RH) (squib) system fault for power supply circuit (short-circuited to power supply)	P.52B-133
B1464*4	Seat belt pre-tensioner (RH) (squib ignition drive circuit) system detected short circuit	P.52B-34
B1465*4	Seat belt pre-tensioner (RH) (squib ignition drive circuit) system detected open circuit	P.52B-34
B1466*4	Analog G-sensor system in the SRS-ECU	P.52B-34
B1467*4	Safing G-sensor open circuit	P.52B-34
B1468*4	Safing G-sensor short circuit	P.52B-34
B1469*4	Safing G-sensor for side-airbag faults	P.52B-34
B1470*3	Seat belt pre-tensioner (LH) (squib) system fault 1 (short circuit between terminals of the squib circuit)	P.52B-136
B1471*3	Seat belt pre-tensioner (LH) (squib) system fault 2 (open in the squib circuit)	P.52B-140
B1472*3	Seat belt pre-tensioner (LH) (squib) system fault for earth circuit (short-circuited to earth)	P.52B-143
B1473*3	Seat belt pre-tensioner (LH) (squib) system fault for power supply circuit (short-circuit to power supply)	P.52B-145
B1474*4	Seat belt pre-tensioner (LH) (squib ignition drive circuit) system detected short circuit	P.52B-34
B1475*4	Seat belt pre-tensioner (LH) (squib ignition drive circuit) system detected open circuit	P.52B-34
B1476*2	IG1 power supply circuit system (fuse No.2 circuit)	P.52B-148
B1477*2	IG1 power supply circuit system (fuse No.3 circuit)	P.52B-148
B1478*4	SRS-ECU capacitor circuit voltage too high	P.52B-34
B1479*4	SRS-ECU capacitor circuit voltage too low	P.52B-34
B1496*4	SRS-ECU non-volatile memory (EEPROM)	P.52B-34
B1497*4	SRS-ECU application specific integrated (for frontal activation)	P.52B-34
B1498*4	SRS-ECU ROM or RAM	P.52B-34
B1499*4	SRS-ECU air bag condition monitor detects deployed air bag	P.52B-154

Main Index
Group TOC

Code No.	Diagnosis item	Reference Page
B1509*2	Improper installation of SRS-ECU	P.52B-154
B1519*3	Connector lock system detects connector unlocked	P.52B-155
B1548*3	CAN communication malfunction	P.52B-34
B1549*3	CAN communication error	P.52B-34
B1552*4	Changing circuit shorted	P.52B-34
B1553*4	Changing circuit open	P.52B-34
B1554*4	SG BY-PASS circuit malfunction	P.52B-34
B1555*4	SG BY-PASS circuit (field effect transistor) open	P.52B-34
B1557*4	SRS-ECU application specific integrated	P.52B-34
U1073*2	Bus-off	P.52B-157

*NOTE: *1: Electrically Erasable Programmable ROM*

**2: This diagnosis code will remain in memory and the SRS warning lamp will be switched off when the system returns to normal condition.*

**3: This diagnosis code will remain in memory and the SRS warning lamp will be switched on even if the system returns to normal condition.*

**4: This diagnosis code cannot be erased by "Erase diagnosis codes" function.*

Main Index
Group TOC

DIAGNOSTIC TROUBLE CODE PROCEDURES

Code No.B1400: Driver's Air Bag Module (1st Squib) System Fault 1 (Short Circuit between Terminals of the Squib Circuit)

Driver's Air Bag Module Circuit

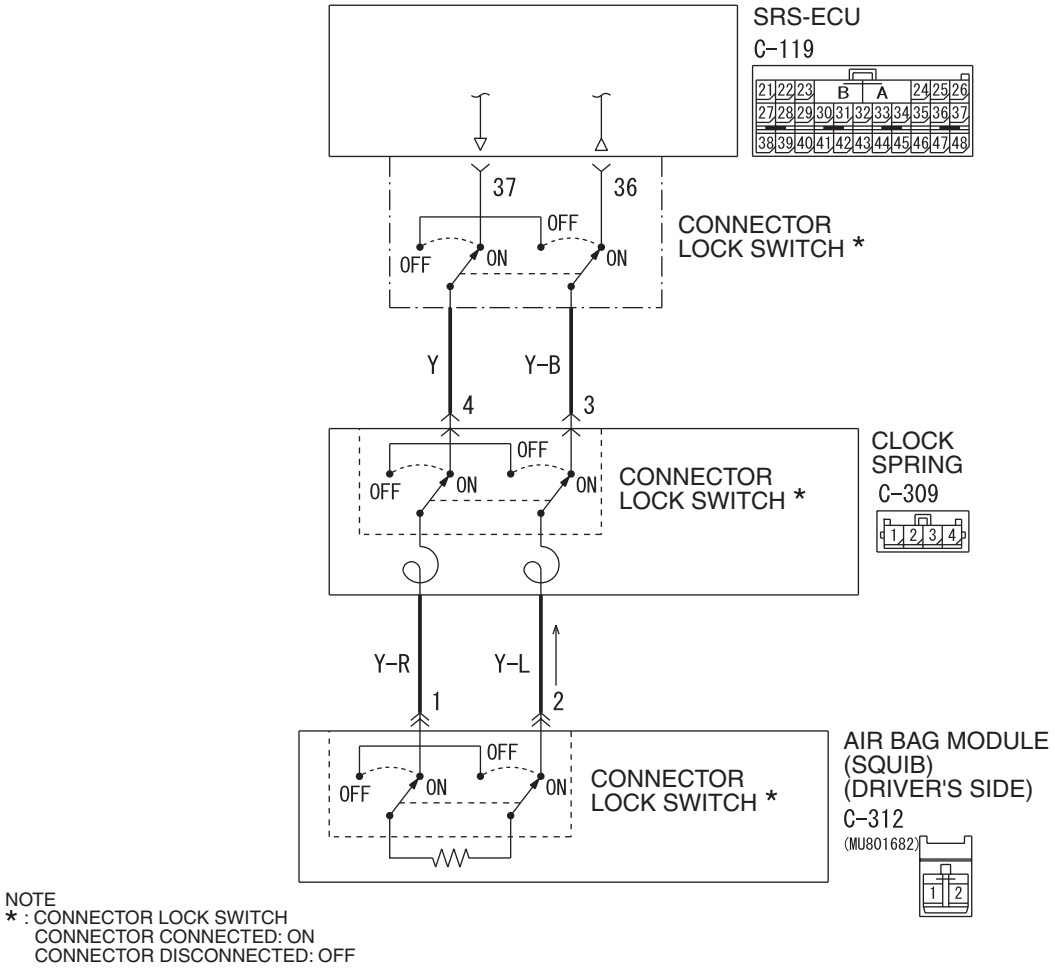

NOTE
* : CONNECTOR LOCK SWITCH
CONNECTOR CONNECTED: ON
CONNECTOR DISCONNECTED: OFF

Wire colour code
B : Black LG : Light green G : Green L : Blue W : White Y : Yellow SB : Sky blue
BR : Brown O : Orange GR : Gray R : Red P : Pink V : Violet

W4X52X001A

Main Index
Group TOC

⚠ CAUTION

If diagnosis code B1400 is set in the SRS-ECU, always diagnose the CAN bus lines.

OPERATION

- The SRS-ECU judges how severe a collision is by detecting signals from the front impact sensors and the front air bag analog G-sensor. If the impact is over a predetermined level, the SRS-ECU sends an ignition signal. At this time, if the front air bag safing G-sensor is on, the SRS air bag will inflate.
- The ignition signal is input to the air bag module via the clock spring to inflate the air bag.

DIAGNOSIS CODE SET CONDITIONS

- This diagnosis code is set if there is abnormal resistance between the input terminals of the driver's side air bag module (squib). The most likely causes for this code to be set are the followings:
  - Short circuit in driver’s air bag module (squib) or harness
  - Short circuit in the clock spring

However, if no diagnosis code reset, the SRS warning lamp will be turned off (diagnosis code will OK).

PROBABLE CAUSES

- Improper engaged connector or defective short spring*
- Short circuit in the clock spring
- Short circuit between the driver's air bag module (squib) circuit terminals
- Damaged connector(s)
- Malfunction of the SRS-ECU

*NOTE: *: The squib circuit connectors integrate a "short" spring (which prevents the air bag from deploying unintentionally due to static electricity by shorting the positive wire to the earth wire in the squib circuit when the connectors are disconnected). (Refer to P.52B-3). Therefore, if connector C-119, C-309 or C-312 is damaged or improperly engaged, the short spring may not be released when the connector is connected.*

DIAGNOSIS PROCEDURE

STEP 1. M.U.T.-III CAN bus diagnostics

Use the M.U.T.-III to diagnose the CAN bus lines.

Q: Is the check result normal?

YES : Go to Step 2 .

NO : . Repair the CAN bus line (Refer to GROUP 54F, Diagnosis P.54F-13).

STEP 2. Check whether the diagnosis code is reset.

Check again if the diagnosis code is set.

(1) Erase the diagnosis code.
(2) Ignition: "LOCK" (OFF) position to "ON"
(3) On completion, check that the diagnosis code is not reset.

Q: Is the diagnosis code set?

YES : Go to Step 3 .

NO : There is an intermittent malfunction such as poor engaged connector(s) or open circuit (Refer to GROUP 00, How to Cope with Intermittent Malfunction P.00-5).

STEP 3. M.U.T.-III diagnosis code

⚠ CAUTION

To prevent damage to M.U.T.-III, always turn the ignition switch to the "LOCK" (OFF) position before connecting or disconnecting M.U.T.-III.

(1) Turn the ignition switch to the "ON" position.
(2) Check if the diagnosis code is set.
(3) Turn the ignition switch to the "LOOK" (OFF) position.

Q: Is diagnosis code B1519 set?

YES : Go to Step 4 .

NO : Go to Step 5 .

STEP 4. Connector check: SRS-ECU connector C-119.

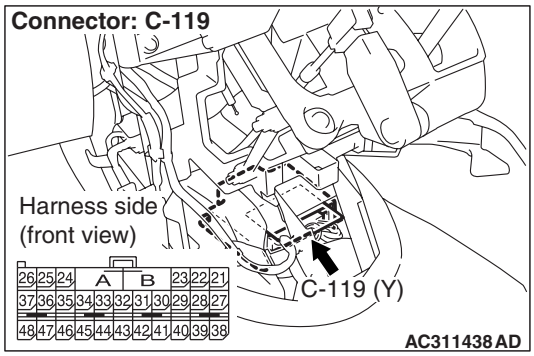

Q: Is the connector correctly engaged?

YES : Go to Step 5 .

NO : Engage the connector correctly. Then go to Step 10.

STEP 5. Connector check: SRS-ECU connector C-119, clock spring connector C-309 and driver's air bag module connector C-312 (M.U.T.-III diagnosis code.)

(1) Disconnect the negative battery terminal.

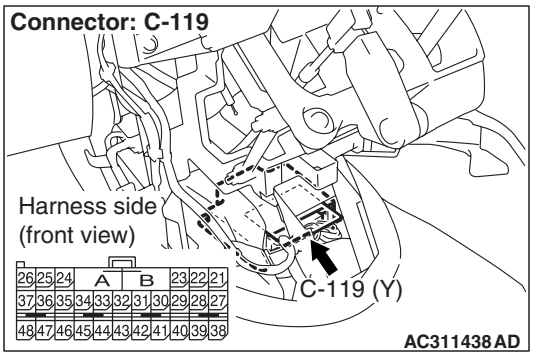

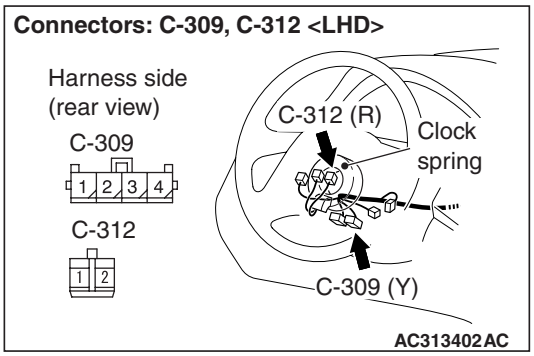

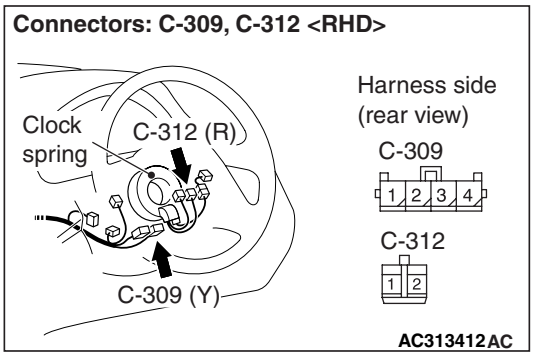

(2) Disconnect connectors C-119, C-309 and C-312, and then reconnect them.
(3) Connect the negative battery terminal.
(4) Erase the diagnosis trouble code memory, and check the diagnosis trouble code.

Q: Is diagnosis code B1400 set?
YES : Go to Step 6 .
NO : The procedure is complete. It is assumed that diagnosis code B1400 set because connector C-119, C-309 or C-312 was engaged improperly.

STEP 6. Check the driver's air bag module (M.U.T.-III diagnosis code).

(1) Disconnect the negative battery terminal.

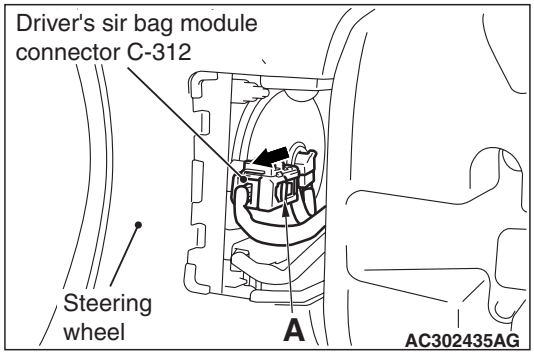

(2) Slide the outer housing of the clock spring side of driver's air bag module connector C-312 in the arrow direction shown, and disconnect the connector.

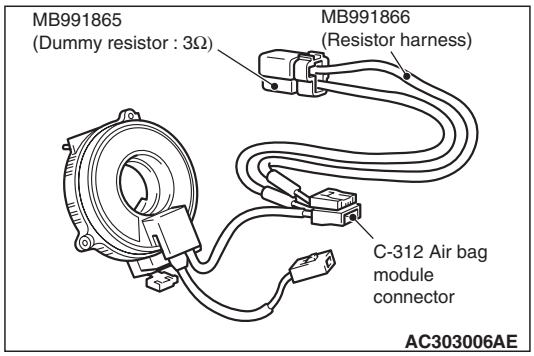

(3) Connect special tool dummy resistor (MB991865) to special tool resistor harness (MB991866).

⚠ CAUTION

Do not insert a test probe into the terminal from its front side directly as the connector contact pressure may be weakened.

(4) Insert special tool MB991866 into clock spring side of driver's air bag module connector C-312 (terminal No.1 and 2) by backprobing.
(5) Connect the negative battery terminal.
(6) Erase the diagnosis code memory, and check the diagnosis code.

Q: Is the checked diagnosis code set?
YES : Go to Step 7 .
NO : Replace the driver's air bag module (Refer to P.52B-334). Then go to Step 10 .

Main Index
Group TOC

STEP 7. Check the clock spring (M.U.T.-III diagnosis code).

(1) Disconnect the negative battery terminal.

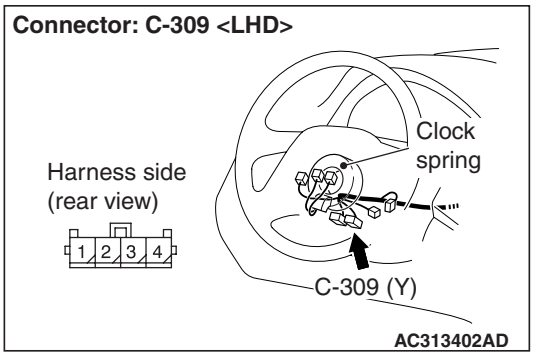

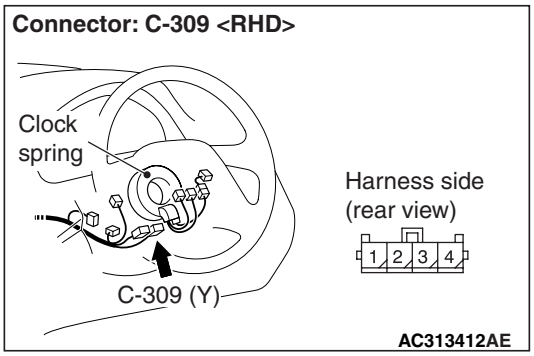

(2) Disconnect the clock spring connector C-309.

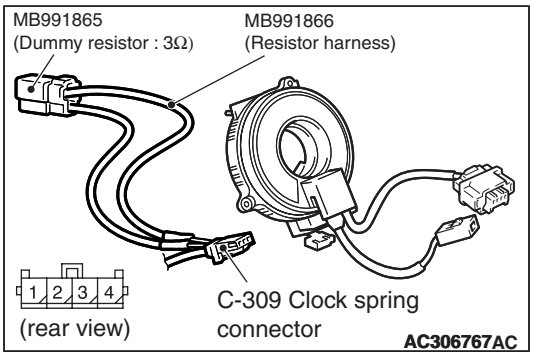

(3) Connect special tool dummy resistor (MB991865) to special tool resistor harness (MB991866).

⚠ CAUTION

Do not insert a test probe into the terminal from its front side directly, as the connector contact pressure may be weakened.

(4) Insert special tool MB991866 into clock spring harness side connector C-309 (terminal No.3 and 4) by backprobing.
(5) Connect the negative battery terminal.
(6) Erase the diagnosis code memory, and check the diagnosis code.

Q: Is the checked diagnosis code set?

YES : Go to Step 8 .

NO : Replace the clock spring (Refer to P.52B-334). Then go to Step 10 .

STEP 8. Check the driver's air bag module circuit. Resistance measurement at SRS-ECU connector C-119.

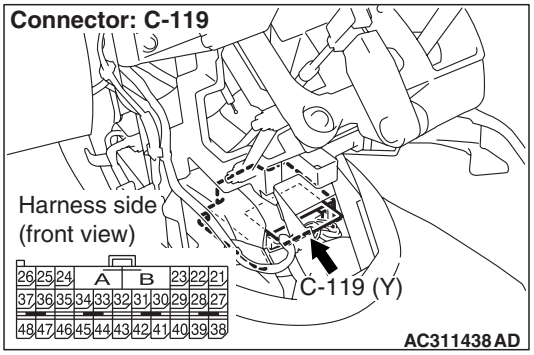

(1) Disconnect SRS-ECU connector C-119.

⚠ *DANGER*

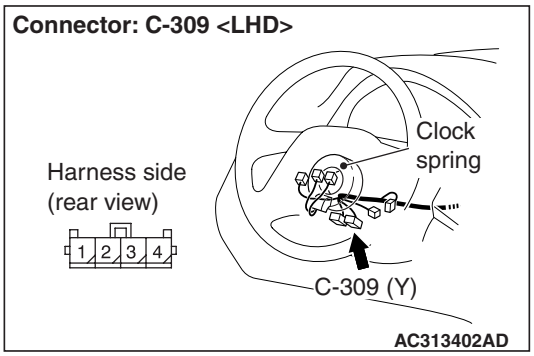

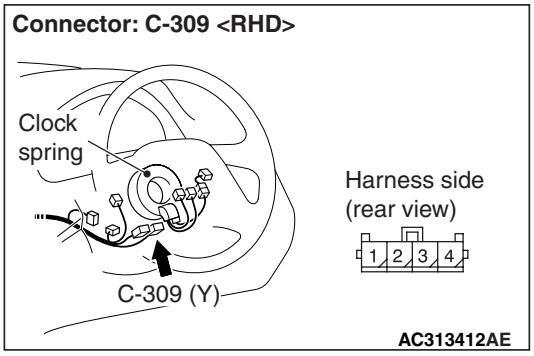

To prevent the air bag from deploying unintentionally, disconnect clock spring connector C-309 to short the squib circuit.

(2) Disconnect clock spring connector C-309.

⚠ CAUTION

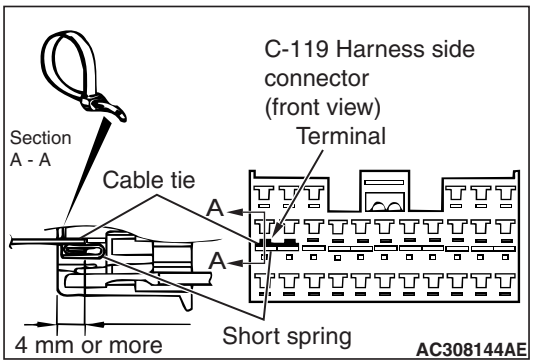

Insert an insulator such as a cable tie to a depth of 4mm or more, otherwise the short spring will not be released.

(3) Insert a cable tie [3 mm wide, 0.5 mm thick] between terminals 36, 37 and the short spring to release the short spring.

⚠ CAUTION

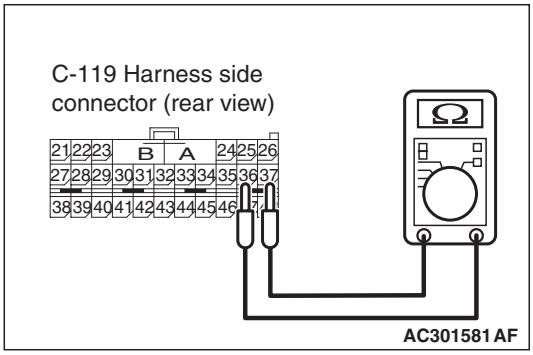

Do not insert a test probe into the terminal from its front side directly as the connector contact pressure may be weakened.

(4) Check for continuity between C-119 harness side connector terminals 36 and 37.

OK: Open circuit

Q: Is the check result normal?

YES : Erase the diagnosis code memory, and check the diagnosis code. If diagnosis code B1400 set, replace the SRS-ECU (Refer to P.52B-332). Then go to Step 10 .

NO : Go to Step 9 .

Main Index
Group TOC

STEP 9. Check the harness for short circuit between SRS-ECU connector C-119 (terminal No.36 and 37) and clock spring connector C-309 (terminal No.3 and 4).

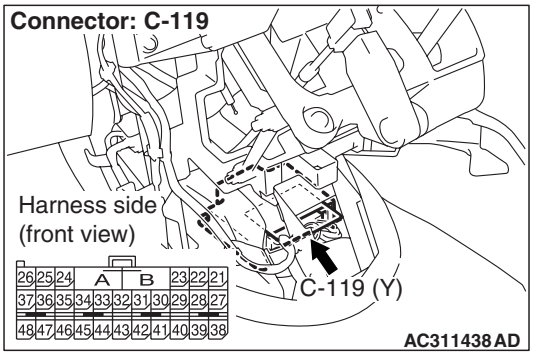

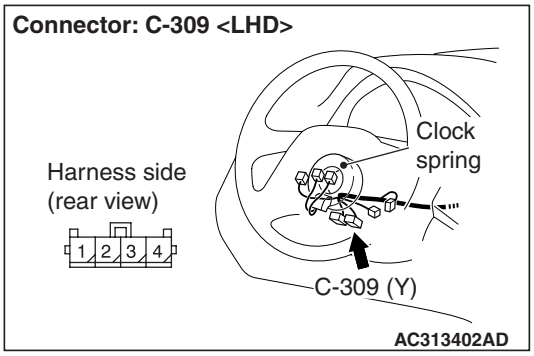

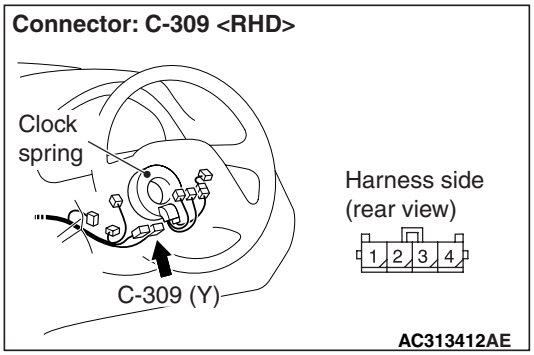

Q: Are harness wires between SRS-ECU connector C-119 (terminal No.36 and 37) and clock spring connector C-309 (terminal No.3 and 4) in good condition?

YES : . Go to Step 10 .

NO : . Replace the harness wires between SRS-ECU connector C-119 and clock spring connector C-309. Then go to Step 10 .

STEP 10. Check whether the diagnosis code is reset.

Q: Is diagnosis code B1400 set?

YES : Return to Step 1 .

NO : The procedure is complete.

Main Index
Group TOC

Code No.B1401: Driver's Air Bag Module (1st Squib) System Fault 2 (Open in the Squib Circuit)

Driver's Air Bag Module Circuit

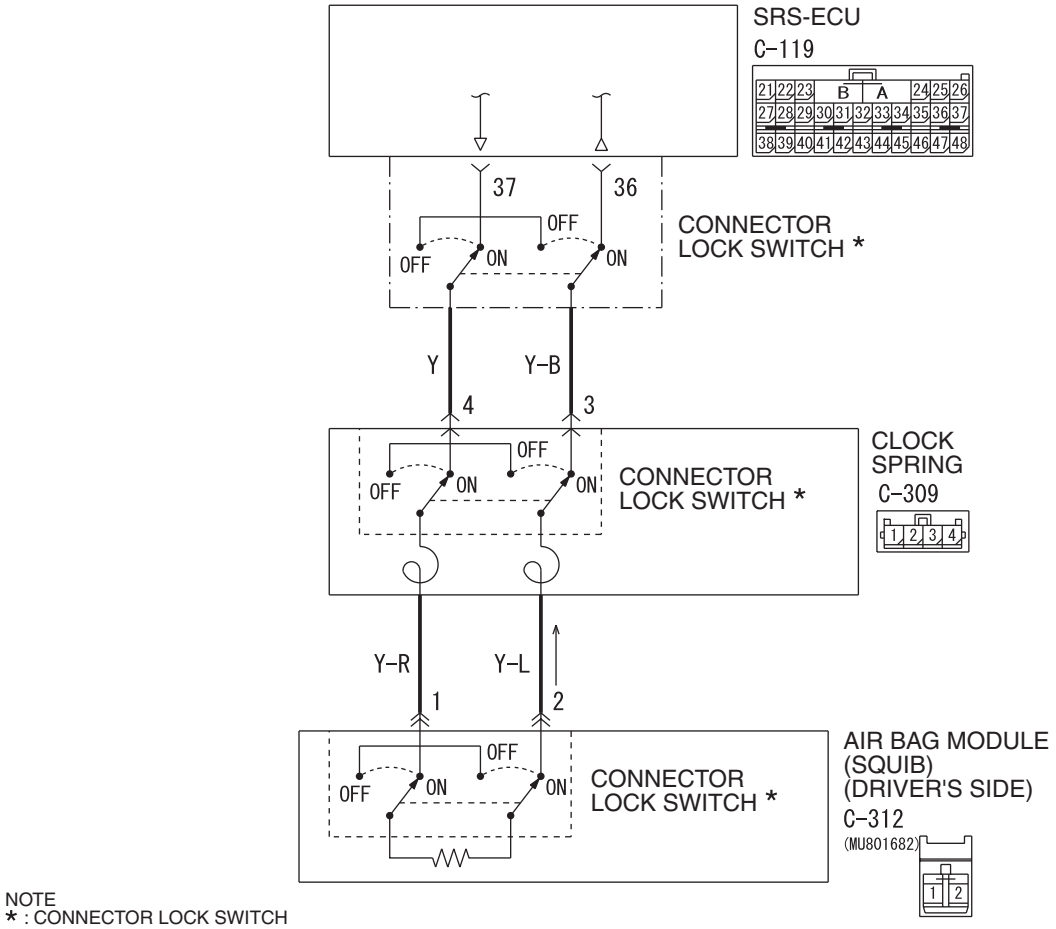

NOTE
* : CONNECTOR LOCK SWITCH
CONNECTOR CONNECTED: ON
CONNECTOR DISCONNECTED: OFF

Wire colour code
B : Black LG : Light green G : Green L : Blue W : White Y : Yellow SB : Sky blue
BR : Brown O : Orange GR : Gray R : Red P : Pink V : Violet

W4X52X001A

⚠ CAUTION

If diagnosis code B1401 is set in the SRS-ECU, always diagnose the CAN main bus line.

OPERATION

- The SRS-ECU judges how severe a collision is by detecting signals from the front impact sensors and the front air bag analog G-sensor. If the impact is over a predetermined level, the SRS-ECU sends an ignition signal. At this time, if the front air bag safing G-sensor is on, the SRS air bag will inflate.
- The ignition signal is input to the air bag module via the clock spring to inflate the air bag.

DIAGNOSIS CODE SET CONDITIONS

- This diagnosis code is set if there is abnormal resistance between the input terminals of the driver's side air bag module (squib). The most likely causes for this code to be set are the followings:
  - Open circuit in the driver's air bag module (squib) or harness
  - Open circuit in the clock spring
  - Malfunction of connector contact

However, if no diagnosis code reset, the SRS warning lamp will be switched off (diagnosis code will be retained).

PROBABLE CAUSES

- Open circuit in the clock spring
- Open circuit due to improper neutral position of the clock spring
- Open circuit in the driver's air bag module (squib) circuit
- Disengaged driver's air bag module (squib) connector
- Improper connector contact
- Malfunction of the SRS-ECU

DIAGNOSIS

STEP 1. M.U.T.-III CAN bus diagnostics

Use the M.U.T.-III to diagnose the CAN bus lines.

Q: Is the check result normal?

YES : Go to Step 2 .

NO : Repair the CAN bus line (Refer to GROUP 54F, Diagnosis P.54F-13).

STEP 2. Check whether the diagnosis code is reset.

Check again if the diagnosis code is set.

(1) Erase the diagnosis code.

(2) Ignition: "LOCK" (OFF) position to "ON"

(3) On completion, check that the diagnosis code is not reset.

Q: Is the diagnosis code set?

YES : Go to Step 3 .

NO : There is an intermittent malfunction such as poor engaged connector(s) or open circuit (Refer to GROUP 00, How to Cope with Intermittent Malfunction P.00-5).

STEP 3. Check the driver's air bag module (M.U.T.-III diagnosis code).

(1) Disconnect the negative battery terminal.

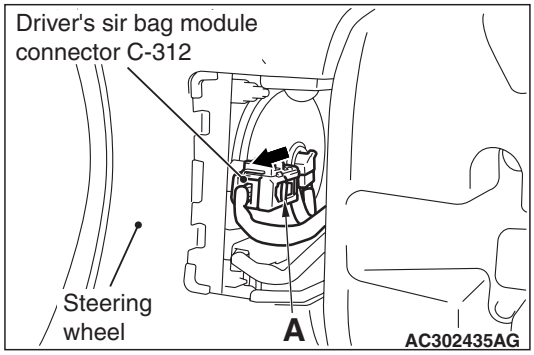

(2) Slide the outer housing of the driver' s air bag module connector C-312 in the arrow direction shown, and disconnect the connector.

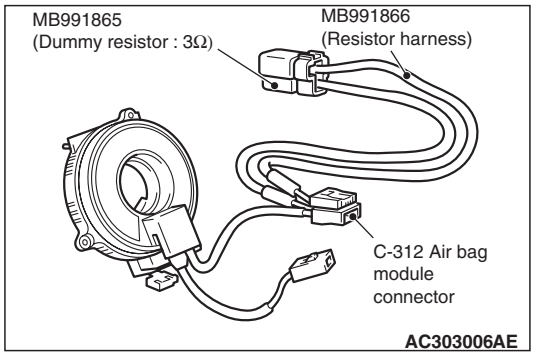

(3) Connect special tool dummy resistor (MB991865) to special tool resistor harness (MB991866).

⚠ CAUTION

Do not insert a test probe into the terminal from its front side directly, as the connector contact pressure may be weakened.

(4) Insert special tool MB991866 into clock spring side of driver's air bag module connector C-312 (terminal No.1 and 2) by backprobing.

(5) Connect the negative battery terminal.

(6) Erase the diagnosis code memory, and check the diagnosis code.

Q: Is the checked diagnosis code set?

YES : Go to Step 4 .

NO : Replace the driver's air bag module (Refer to P.52B-334). Then go to Step 6 .

STEP 4. Check the clock spring (M.U.T.-III diagnosis code).

(1) Disconnect the negative battery terminal.

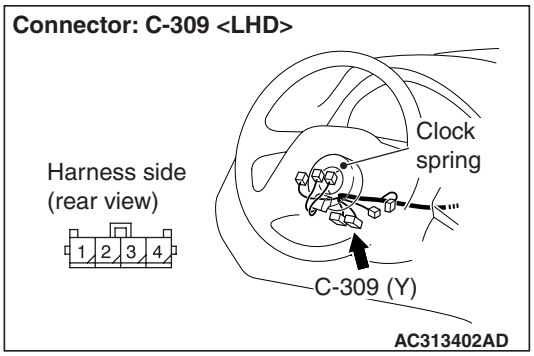

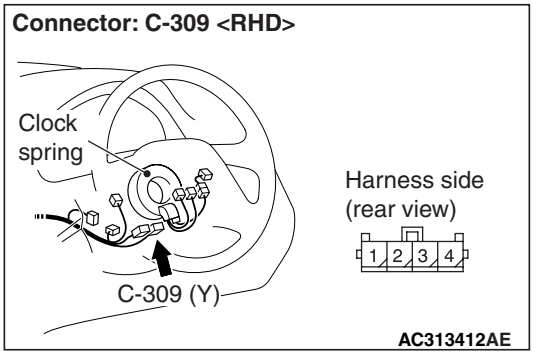

(2) Disconnect the clock spring connector C-309.

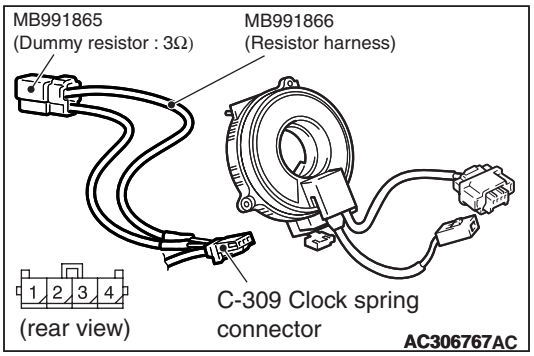

(3) Connect special tool dummy resistor (MB991865) to special tool resistor harness (MB991866).

⚠ CAUTION

Do not insert a test probe into the terminal from its front side directly, as the connector contact pressure may be weakened.

(4) Insert special tool MB991866 into harness side of clock spring connector C-309 (terminal No.3 and 4) by backprobing.
(5) Connect the negative battery terminal.
(6) Erase the diagnosis code memory, and check the diagnosis code.

Q: Is the checked diagnosis code set?

YES : Go to Step 5 .

NO : Replace the clock spring (Refer to P.52B-334). Then go to Step 6 .

STEP 5. Check the harness between the SRS-ECU connector C-119 (terminal No.36 and 37) and the clock spring connector C-309 (terminal No.3 and 4) for open circuit.

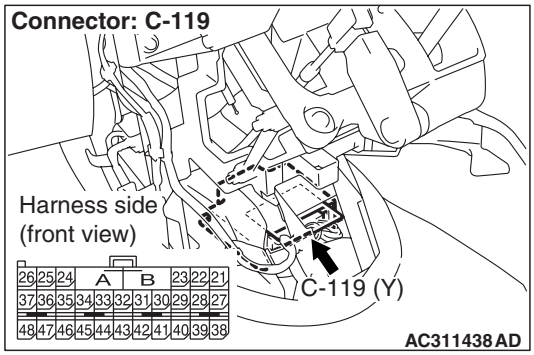

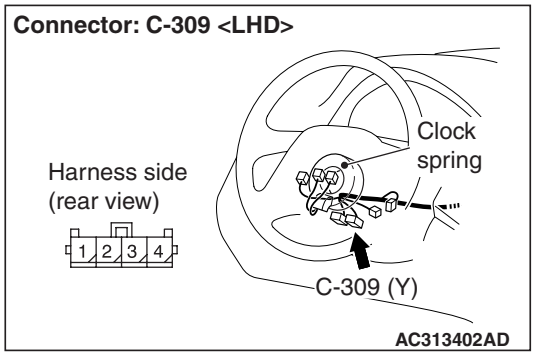

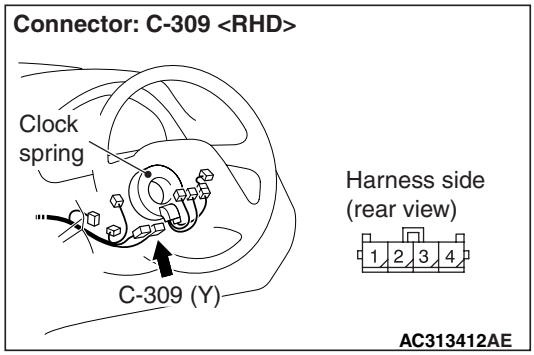

(1) Disconnect SRS-ECU connector C-119 and clock spring connector C-309.

⚠ CAUTION

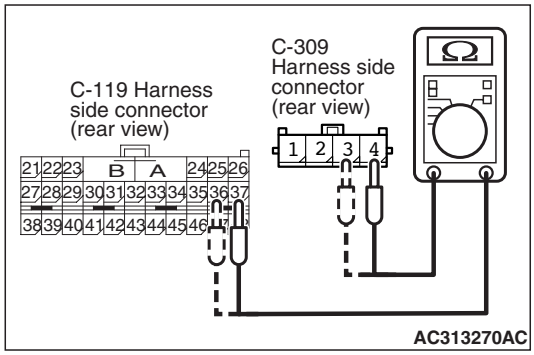

Do not insert a test probe into the terminal from its front side directly, as the connector contact pressure may be weakened.

Main Index
Group TOC

(2) Check for continuity between the following terminals.
- SRS-ECU connector C-119 (terminal No.36) and the clock spring connector C-309 (terminal No.3)
- SRS-ECU connector C-119 (terminal No.37) and the clock spring connector C-309 (terminal No.4)

OK: Less than 2 Ω

Q: Are the check results normal?

YES : . Erase the diagnosis code memory, and check the diagnosis code. If diagnosis code B1401 set, replace the SRS-ECU (Refer to P.52B-332). Then go to Step 6 .

NO : . Replace the harness wires between SRS-ECU connector C-119 and clock spring connector C-309. Then go to Step 6 .

STEP 6. Check whether the diagnosis code is reset.

Q: Is diagnosis code B1401 set?

YES : Return to Step 1 .

NO : The procedure is complete.

Main Index
Group TOC

Code No.1402: Driver's Air Bag Module (1st Squib) System Fault for Earth Circuit (Short-Circuited to Earth)

Driver's Air Bag Module Circuit

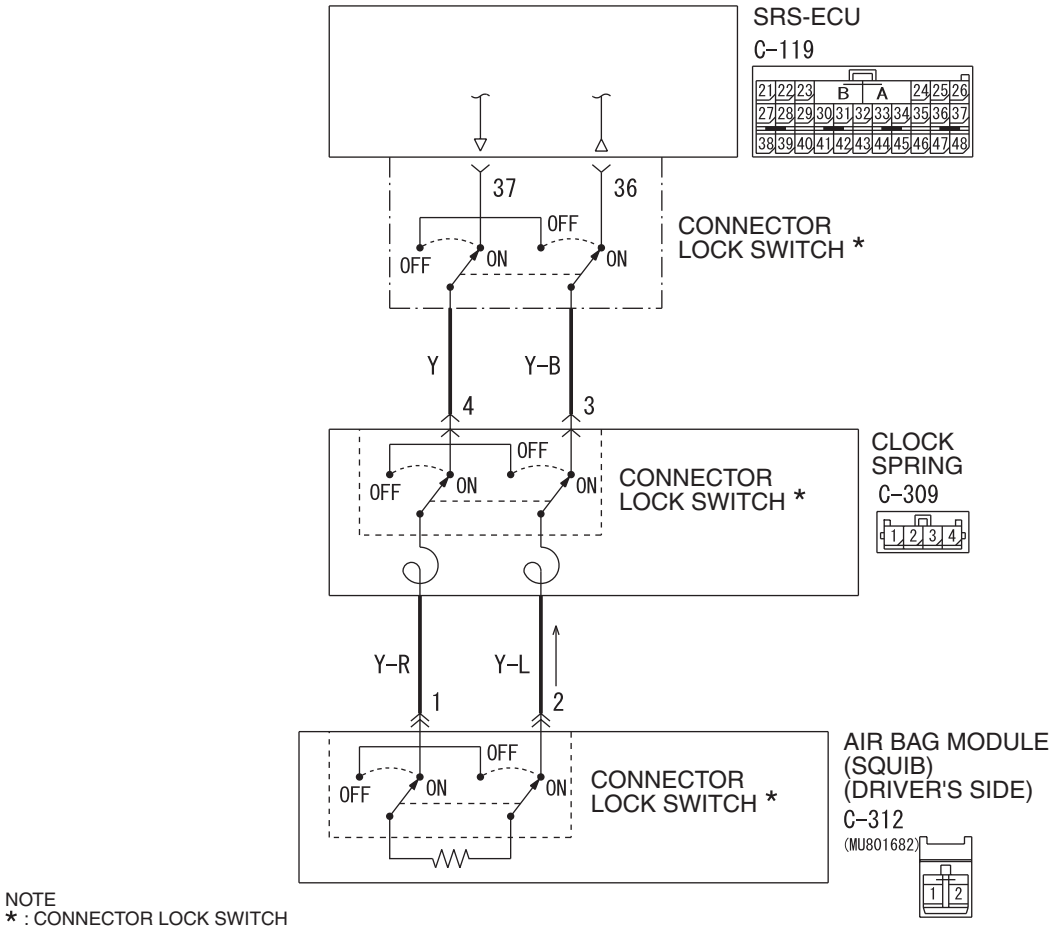

NOTE
* : CONNECTOR LOCK SWITCH
CONNECTOR CONNECTED: ON
CONNECTOR DISCONNECTED: OFF

Wire colour code
B : Black LG : Light green G : Green L : Blue W : White Y : Yellow SB : Sky blue
BR : Brown O : Orange GR : Gray R : Red P : Pink V : Violet

W4X52X001A

⚠ CAUTION

If diagnosis code B1402 is set in the SRS-ECU, always diagnose the CAN main bus line.

OPERATION

- The SRS-ECU judges how severe a collision is by detecting signals from the front impact sensors and the front air bag analog G-sensor. If the impact is over a predetermined level, the SRS-ECU sends an ignition signal. At this time, if the front air bag safing G-sensor is on, the SRS air bag will inflate.
- The ignition signal is sent to the air bag module via the clock spring to inflate the air bag.

DIAGNOSIS CODE SET CONDITIONS

This diagnosis code is set if there is abnormal resistance between the input terminals of the driver's air bag module (squib). However, if no diagnosis code resets, the SRS warning lamp will be switched off (diagnosis code will be retained).

Main Index
Group TOC

PROBABLE CAUSES

- Malfunction of the clock spring
- Damaged harness wires and connectors
- Short to the ground in the driver's air bag module (squib) harness
- Malfunction of the SRS-ECU

DIAGNOSIS PROCEDURE

STEP 1. M.U.T.-III CAN bus diagnostics

Use the M.U.T.-III to diagnose the CAN bus lines.

Q: Is the check result normal?

YES : Go to Step 2 .

NO : Repair the CAN bus line (Refer to GROUP 54F, Diagnosis P.54F-13).

STEP 2. Check whether the diagnosis code is reset.

Check again if the diagnosis code is set.

(1) Erase the diagnosis code.

(2) Ignition: "LOCK" (OFF) position to "ON"

(3) On completion, check that the diagnosis code is not reset.

Q: Is the diagnosis code set?

YES : Go to Step 3 .

NO : There is an intermittent malfunction such as poor engaged connector(s) or open circuit (Refer to GROUP 00, How to Cope with Intermittent Malfunction P.00-5).

STEP 3. Check the driver's air bag module (M.U.T.-III diagnosis code).

(1) Disconnect the negative battery terminal.

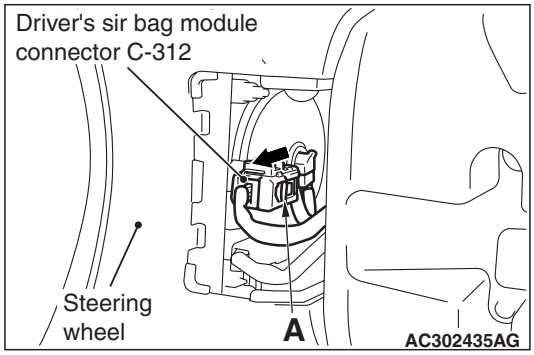

(2) Slide the outer housing of the driver' s air bag module connector C-312 in the arrow direction shown, and disconnect the connector.

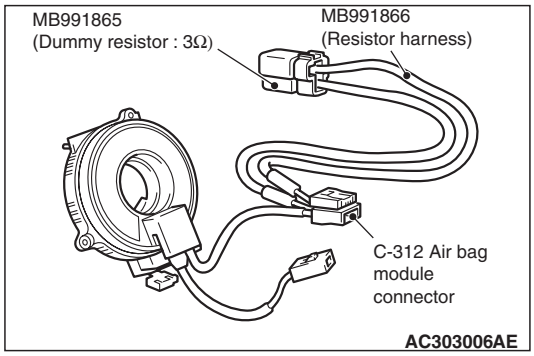

(3) Connect special tool dummy resistor (MB991865) to special tool resistor harness (MB991866).

⚠ CAUTION

Do not insert a test probe into the terminal from its front side directly, as the connector contact pressure may be weakened.

(4) Insert special tool MB991866 into clock spring side air bag module connector C-312 (terminal No.1 and 2) by backprobing.

(5) Connect the negative battery terminal.

(6) Erase the diagnosis code memory, and check the diagnosis code.

Q: Is the checked diagnosis code set?

YES : Go to Step 4 .

NO : Replace the driver's air bag module (Refer to P.52B-334). Then go to Step 7 .

STEP 4. Check the clock spring (M.U.T.-III diagnosis code).

(1) Disconnect the negative battery terminal.

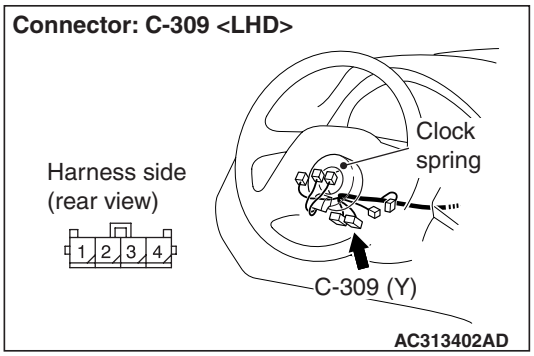

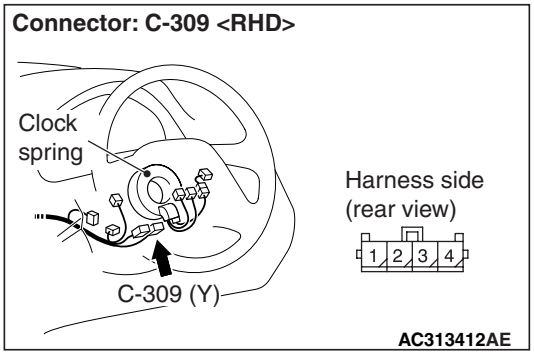

(2) Disconnect the clock spring connector C-309.

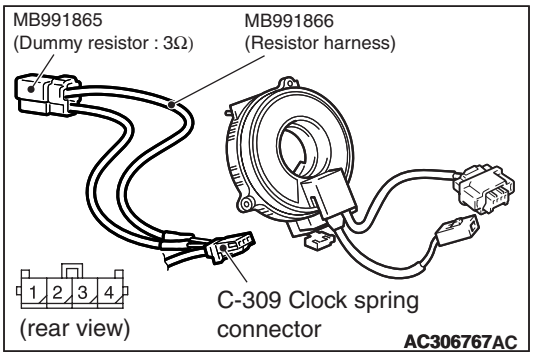

(3) Connect special tool dummy resistor (MB991865) to special tool resistor harness (MB991866).

⚠ CAUTION

Do not insert a test probe into the terminal from its front side directly, as the connector contact pressure may be weakened.

(4) Insert special tool MB991866 into clock spring harness side connector C-309 (terminal No.3 and 4) by backprobing.
(5) Connect the negative battery terminal.
(6) Erase the diagnosis code memory, and check the diagnosis code.

Q: Is the checked diagnosis code set?

YES : Go to Step 5 .

NO : Replace the clock spring (Refer to P.52B-334). Then go to Step 7 .

STEP 5. Check the driver's air bag module circuit. Resistance measurement at the SRS-ECU connector C-119.

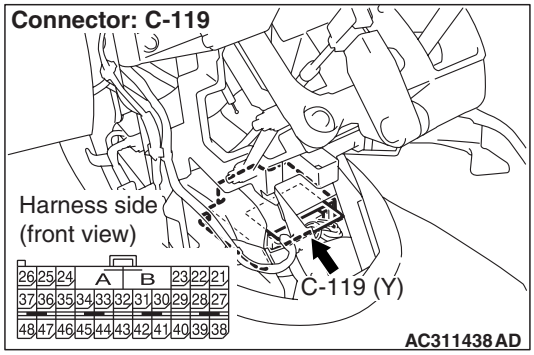

(1) Disconnect SRS-ECU connector C-119.

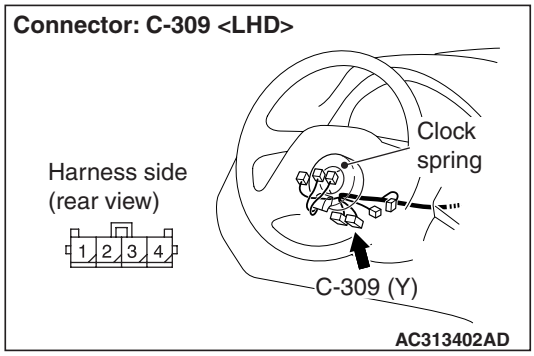

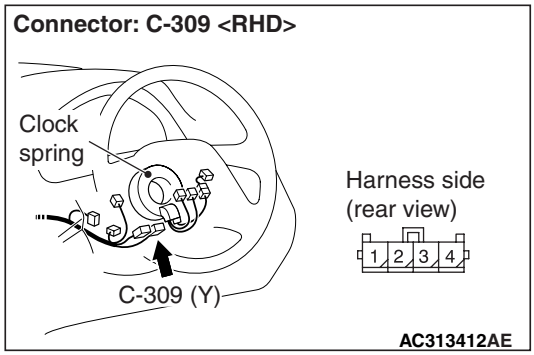

(2) Disconnect the clock spring connector C-309.

⚠ CAUTION

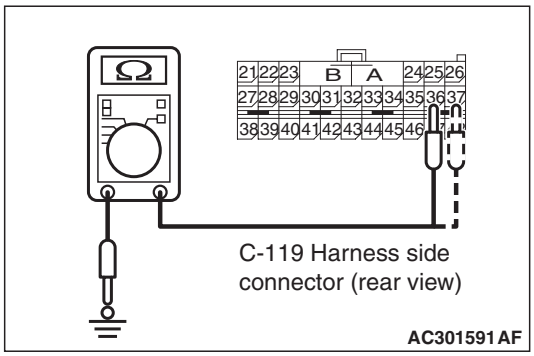

Do not insert a test probe into the terminal from its front side directly, as the connector contact pressure may be weakened.

(3) Check for continuity between C-119 harness side connector terminals 36 and 37 and body earth.

OK: Open circuit

Q: Is the check result normal?

YES : Erase the diagnosis code memory, and check the diagnosis code. If diagnosis code B1402 sets, replace the SRS-ECU (Refer to P.52B-332). Then go to Step 6 .

NO : Go to Step 7 .

STEP 6. Check the harness for short circuit to ground between SRS-ECU connector C-119 (terminal No.36 and 37) and clock spring connector C-309 (terminal No.3 and 4).

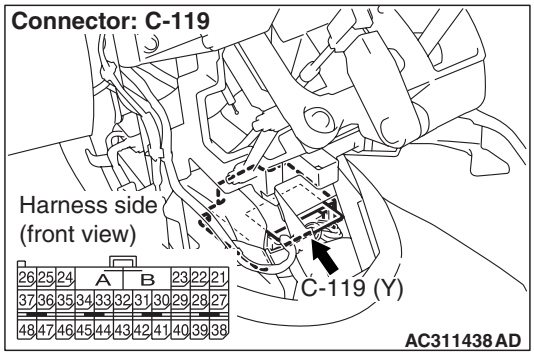

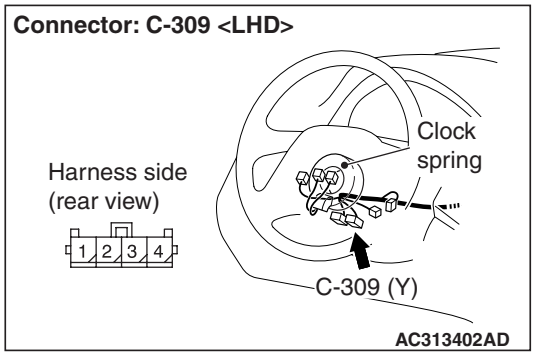

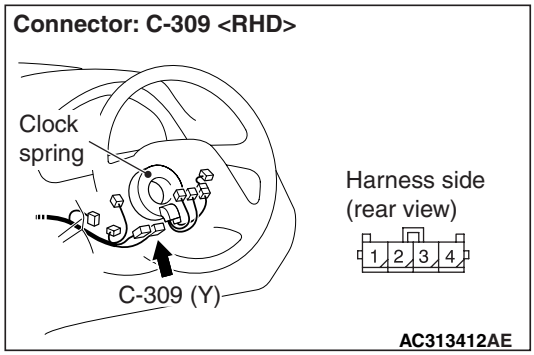

Q: Are the harness wires between SRS-ECU connector C-119 (terminal No.36 and 37) and clock spring connector C-309 (terminal No.3 and 4) in good condition?

YES : Go to Step 7 .

NO : Replace the harness wires between SRS-ECU connector C-119 and clock spring connector C-309. Then go to Step 7 .

STEP 7. Check whether the diagnosis code is reset.

Q: Is diagnosis code B1402 set?

YES : Return to Step 1 .

NO : The procedure is complete.

Main Index
Group TOC

Code No.B1403: Driver's Air Bag Module (1st Squib) System Fault for Power Supply Circuit (Short-Circuited to Power Supply)

Driver's Air Bag Module Circuit

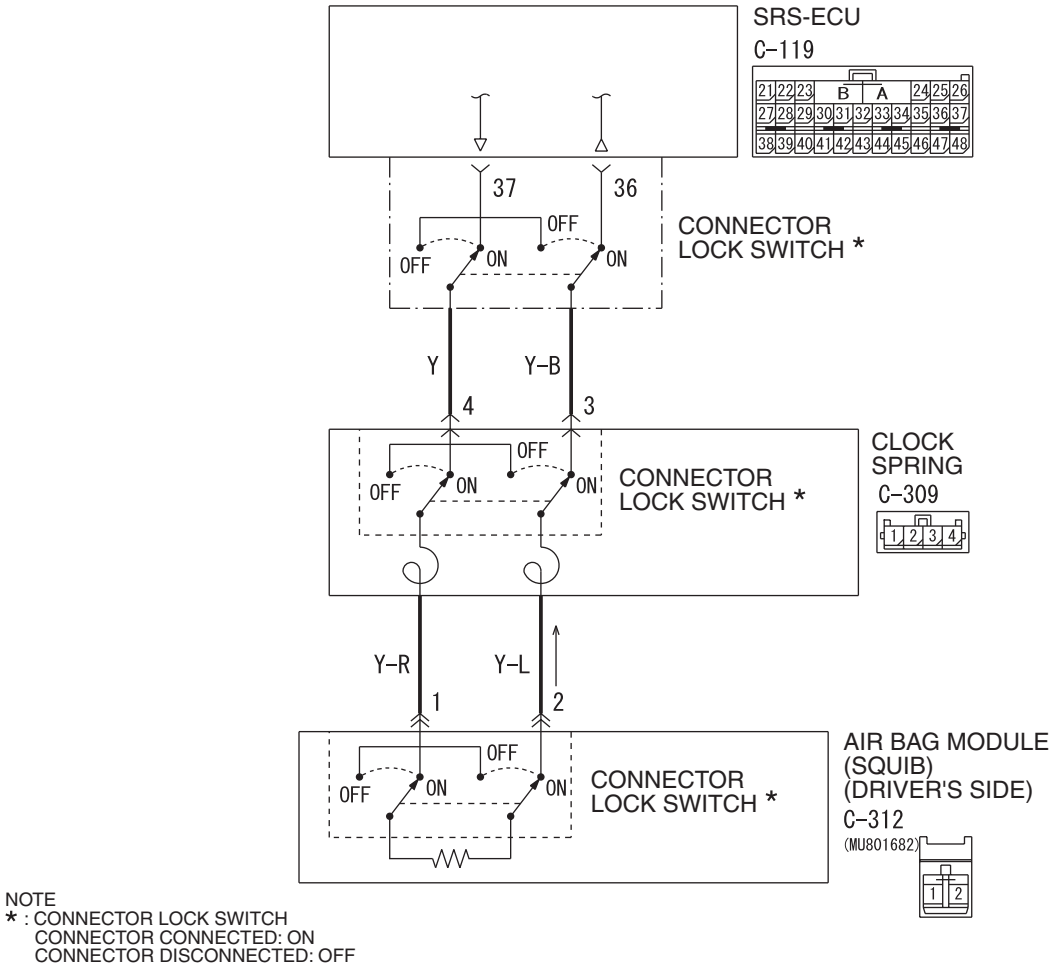

Wire colour code
B : Black LG : Light green G : Green L : Blue W : White Y : Yellow SB : Sky blue
BR : Brown O : Orange GR : Gray R : Red P : Pink V : Violet

W4X52X001A

⚠ CAUTION

If diagnosis code B1403 is set in the SRS-ECU, always diagnose the CAN main bus line.

OPERATION

- The SRS-ECU judges how severe a collision is by detecting signals from the front impact sensors and the front air bag analog G-sensor. If the impact is over a predetermined level, the SRS-ECU sends an ignition signal. At this time, if the front air bag safing G-sensor is on, the SRS air bag will inflate.
- The ignition signal is input to the air bag module via the clock spring to inflate the air bag.

DIAGNOSIS CODE SET CONDITIONS

This diagnosis code is set if there is abnormal resistance between the input terminals of the driver's air bag module (squib). However, if no diagnosis code resets, the SRS warning light will be switched off (diagnosis code will be retained).

PROBABLE CAUSES

- Malfunction of the clock spring
- Damaged harness wires and connectors
- Short to the power supply in the driver's air bag module (squib) harness
- Malfunction of the SRS-ECU

DIAGNOSIS PROCEDURE

STEP 1. M.U.T.-III CAN bus diagnostics

Use the M.U.T.-III to diagnose the CAN bus lines.

Q: Is the check result normal?

YES : Go to Step 2 .

NO : Repair the CAN bus line (Refer to GROUP 54F, Diagnosis P.54F-13).

STEP 2. M.U.T.-III diagnosis code

Check again if the diagnosis code is set.

(1) Erase the diagnosis code.

(2) Ignition: "LOCK" (OFF) position to "ON"

(3) On completion, check that the diagnosis code is not reset.

Q: Is the diagnosis code set?

YES : Go to Step 3 .

NO : There is an intermittent malfunction such as poor engaged connector(s) or open circuit (Refer to GROUP 00, How to Cope with Intermittent Malfunction P.00-5).

STEP 3. Check the driver's air bag module (M.U.T.-III diagnosis code).

(1) Disconnect the negative battery terminal.

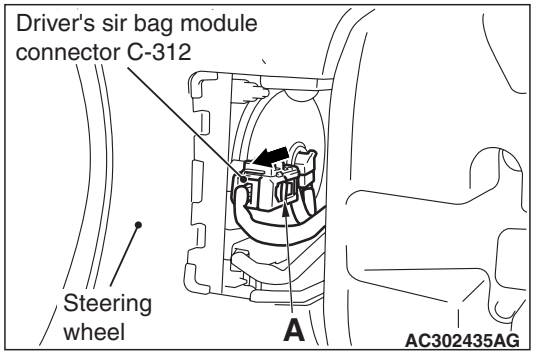

(2) Slide the outer housing of the driver' s air bag module connector C-312 in the arrow direction shown, and disconnect the connector.

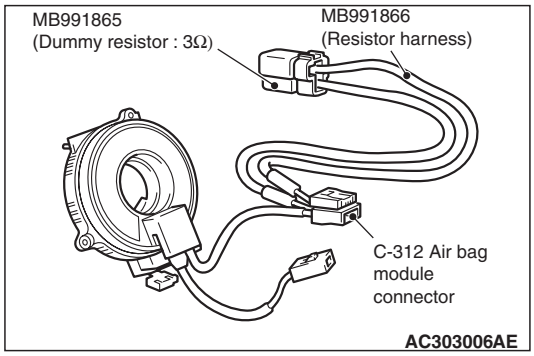

(3) Connect special tool dummy resistor (MB991865) to special tool resistor harness (MB991866).

⚠ CAUTION

Do not insert a test probe into the terminal from its front side directly, as the connector contact pressure may be weakened.

(4) Insert special tool MB991866 into clock spring side air bag module connector C-312 (terminal No.1 and 2) by backprobing.

(5) Connect the negative battery terminal.

(6) Erase the diagnosis code memory, and check the diagnosis code.

Q: Is the checked diagnosis code set?

YES : Go to Step 4 .

NO : Replace the driver's air bag module (Refer to P.52B-334). Then go to Step 7 .

STEP 4. Check the clock spring (M.U.T.-III diagnosis code).

(1) Disconnect the negative battery terminal.

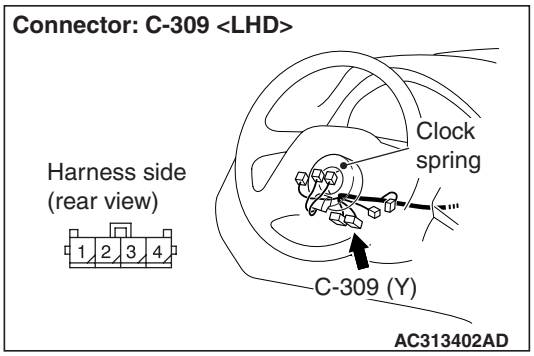

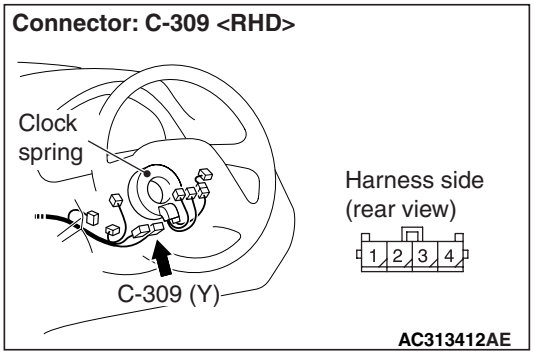

(2) Disconnect the clock spring connector C-309.

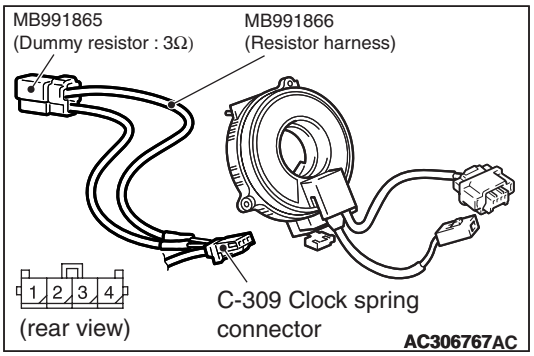

(3) Connect special tool dummy resistor (MB991865) to special tool resistor harness (MB991866).

⚠ CAUTION

Do not insert a test probe into the terminal from its front side directly, as the connector contact pressure may be weakened.

(4) Insert special tool MB991866 into clock spring harness side connector C-309 (terminal No.3 and 4) by backprobing.
(5) Connect the negative battery terminal.
(6) Erase the diagnosis code memory, and check the diagnosis code.

Q: Is the checked diagnosis code set?

YES : Go to Step 5 .

NO : Replace the clock spring (Refer to P.52B-334). Then go to Step 7 .

STEP 5. Check the driver's air bag module circuit. Voltage measurement at the SRS-ECU connector C-119.

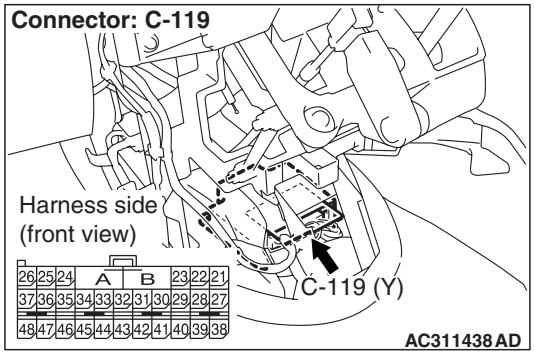

(1) Disconnect SRS-ECU connector C-119.

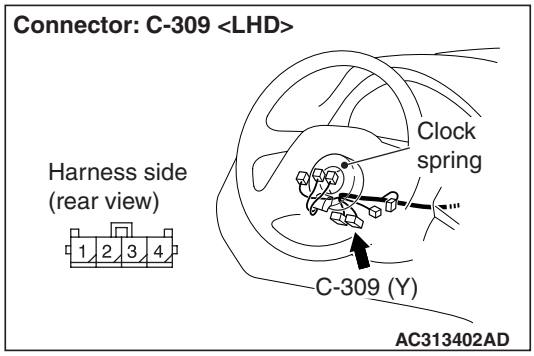

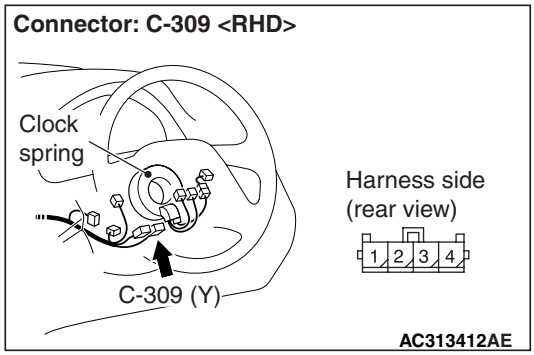

(2) Disconnect the clock spring connector C-309.
(3) Turn the ignition switch to the "ON" position.

⚠ CAUTION

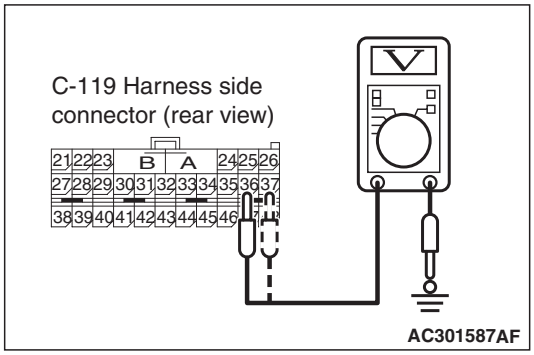

Do not insert a test probe into the terminal from its front side directly, as the connector contact pressure may be weakened.

(4) Measure the voltage between C-119 harness side connector terminals 36 and 37 and body earth.

OK: 0 V

Q: Is the measured voltage within the specified range?

YES : Erase the diagnosis code memory, and check the diagnosis code. If diagnosis code B1403 sets, replace the SRS-ECU (Refer to P.52B-332). Then go to Step 7 .

NO : Go to Step 6 .

STEP 6. Check the harness for short circuit to power supply between SRS-ECU connector C-119 (terminal No.36 and 37) and clock spring connector C-309 (terminal No.3 and 4).

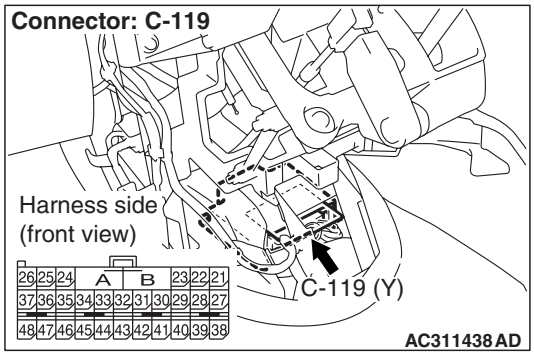

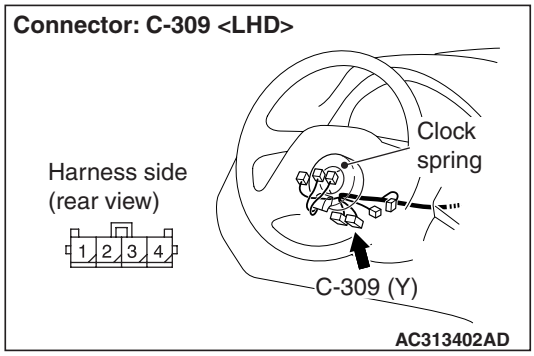

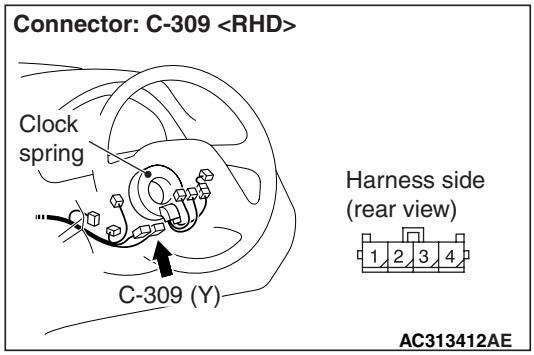

Q: Are harness wires between the SRS-ECU connector C-119 (terminal No.36 and 37) and clock spring connector C-309 (terminal No.3 and 4) in good condition?

YES : Go to Step 7 .

NO : Replace the harness wires between SRS-ECU connector C-119 and clock spring connector C-309. Then go to Step 7 .

STEP 7. Check whether the diagnosis code is reset.

Q: Is diagnosis code B1403 set?

YES : Return to Step 1 .

NO : The procedure is complete.

Main Index
Group TOC

Code No.B1404: Driver's Air Bag Module (Ignition Drive Circuit) System Detected Short Circuit
Code No.B1405: Driver's Air Bag Module (Ignition Drive Circuit) System Detected Open Circuit
Code No.B1414: Passenger's (Front) Air Bag Module (Ignition Drive Circuit) System Detected Short Circuit
Code No.B1415: Passenger's (Front) Air Bag Module (Ignition Drive Circuit) System Detected Open Circuit
Code No.B1424: Side-Airbag Module (RH) (Squib) System Detected Short Circuit
Code No.B1425: Side-Airbag Module (RH) (Squib) System Detected Open Circuit
Code No.B1434: Side-Airbag Module (LH) (Squib) System Fault 3 for Ignition Drive Circuit
Code No.B1435: Side-Airbag Module (LH) (Squib) System Fault 4 for Ignition Drive Circuit
Code No.B1444: Curtain air bag Module (RH) (Squib) System Fault 3 for Ignition Drive Circuit
Code No.B1445: Curtain air bag Module (RH) (Squib) System Fault 4 for Ignition Drive Circuit
Code No.B1454: Curtain air bag Module (LH) (Squib) System Fault 3 for Ignition Drive Circuit
Code No.B1455: Curtain air bag Module (LH) (Squib) System Fault 4 for Ignition Drive Circuit
Code No.B1464: Seat Belt Pre-tensioner (RH) (Squib Ignition Drive Circuit) System Detected Short Circuit
Code No.B1465: Seat Belt Pre-tensioner (RH) (Squib Ignition Drive Circuit) System Detected Open Circuit
Code No.B1466: Analog G-Sensor System in the SRS-ECU
Code No.B1467: Safing G-Sensor Open Circuit
Code No.B1468: Safing G-Sensor Short Circuit
Code No.B1469: Safing G-Sensor for Side-Airbag Faults
Code No.B1474: Seat Belt Pre-tensioner (LH) (Squib Ignition Drive Circuit) System Detected Short Circuit
Code No.B1475: Seat Belt Pre-tensioner (LH) (Squib Ignition Drive Circuit) System Detected Open Circuit
Code No.B1478: SRS-ECU Capacitor Circuit Voltage too High
Code No.B1479: SRS-ECU Capacitor Circuit Voltage too Low
Code No.B1496: SRS-ECU Non-Volatile Memory (EEPROM)
Code No.B1497: SRS-ECU Application Specific Integrated Circuit (for frontal activation)
Code No.B1498: SRS-ECU ROM or RAM
Code No.B1548: CAN Communication Malfunction
Code No.B1549: CAN Communication error
Code No.B1552: Changing Circuit shorted
Code No.B1553: Changig Circuit open
Code No.B1554: SG BY-PASS Circuit Malfunction
Code No.B1555: SG BY-PASS Circuit (Field Effect Transistor) Open
Code No.B1557: SRS-ECU Application Specific Integrated Circuit

⚠ CAUTION
If diagnosis codes is set in the SRS-ECU, always diagnose the CAN main bus line.

DIAGNOSIS CODE SET CONDITIONS
- These diagnosis code are set when a fault is detected in the SRS-ECU. The most likely causes for this code to be set are shown in the table below:

PROBABLE CAUSE
- Malfunction of the SRS-ECU

Main Index
Group TOC

Code No.	Part/Circuit integral to SRS-ECU	Trouble causes
B1404	Driver's air bag module (squib ignition drive circuit)	• Short circuit in the squib ignition drive circuit
B1405		• Open circuit in the squib ignition drive circuit
B1414	Front passenger's air bag module (squib ignition drive circuit)	• Short circuit in the squib ignition drive circuit
B1415		• Open circuit in the squib ignition drive circuit
B1424	Side-airbag module (RH) (squib ignition drive circuit)	• Short circuit in the squib ignition drive circuit
B1425		• Open circuit in the squib ignition drive circuit
B1434	Side-airbag module (LH) (squib ignition drive circuit)	• Short circuit in the squib ignition drive circuit
B1435		• Open circuit in the squib ignition drive circuit
B1444	Curtain air bag module (RH) (squib ignition drive circuit)	• Short circuit in the squib ignition drive circuit
B1445		• Open circuit in the squib ignition drive circuit
B1454	Curtain air bag module (LH) (squib ignition drive circuit)	• Short circuit in the squib ignition drive circuit
B1455		• Open circuit in the squib ignition drive circuit
B1464	Seat belt pre-tensioner (RH) (squib ignition drive circuit)	• Short circuit in the squib ignition drive circuit
B1465		• Open circuit in the squib ignition drive circuit
B1466	Analog G-sensor	• When the analog G-sensor is not operating • When the characteristics of the analog G-sensor are abnormal • When the output from the analog G-sensor is abnormal
B1467	Safing G-sensor (front air bag)	• Open circuit in the safing G-sensor
B1468		• Short circuit in the safing G-sensor
B1469	Safing G-sensor (side-airbag)	• When the safing G-sensor is not operating • When the characteristics of the safing G-sensor are abnormal • When the output from the safing G-sensor is abnormal
B1474	Seat belt pre-tensioner (LH) (squib ignition drive circuit)	• Short circuit in the squib ignition drive circuit
B1475		• Open circuit in the squib ignition drive circuit
B1478	Capacitor	• Voltage at the capacitor terminal is higher than the specified value for five seconds or more
B1479		• Voltage at the capacitor terminal is lower than the specified value for five seconds or more (This is not detected if DTC No.B1476 or B1477 indicating battery positive voltage drop has been set).
B1496	Non-volatile memory (EEPROM)	• When the non-volatile memory (EEPROM) are abnormal
B1497	Application specific integrated circuit (for frontal activation)	• When the application specific integrated circuit (frontal activation) are abnormal
B1498	ROM or RAM	• When the ROM or RAM are abnormal
B1548	CAN communication	• When the CAN communication are abnormal
B1549		• When the CAN communication are error
B1552	Changing of Power Supply	• Short circuit in the changing circuit
B1553		• Open circuit in the changing circuit

Main Index
Group TOC

Code No.	Part/Circuit integral to SRS-ECU	Trouble causes
B1554	SG-BYPASS	When the application specific integrated circuit (frontal activation) are abnormal
B1555		• When the ROM or RAM are abnormal
B1557	Application specific integrated circuit	When the application specific integrated circuit are abnormal

DIAGNOSIS PROCEDURE

STEP 1. M.U.T.-III CAN bus diagnostics
Use the M.U.T.-III to diagnose the CAN bus lines.

Q: Is the check result normal?
YES : Go to Step 2.
NO : Repair the CAN bus line (Refer to GROUP 54F, Diagnosis P.54F-13).

STEP 2. Check whether the diagnosis code is reset.
Check again if the diagnosis code is set.
(1) Erase the diagnosis code.
(2) Ignition: "LOCK" (OFF) position to "ON"
(3) On completion, check that the diagnosis code is not reset.

Q: Is the diagnosis codes set?
YES : Replace the SRS-ECU (Refer to P.52B-332).
NO : There is an intermittent malfunction such as poor engaged connector(s) or open circuit (Refer to GROUP 00, How to Cope with Intermittent Malfunction P.00-5).

Code No.B1406: Front Impact Sensor (RH) System for Fault 1
Code No.B1416: Front Impact Sensor (LH) System for Fault 1

⚠ CAUTION
If diagnosis code B1406 or B1416 is set in the SRS-ECU, always diagnose the CAN main bus line.

DIAGNOSIS CODE SET CONDITIONS

These diagnosis codes are set if the following conditions are detected from the analogue G-sensor inside the front impact sensor output:
- Analogue G-sensor is not operating.
- Analogue G-sensor characteristics are abnormal.
- Analogue G-sensor output is abnormal.

PROBABLE CAUSES

Malfunction of front impact sensor (RH) (for diagnosis code B1406) and front impact sensor (LH) (for diagnosis code B1416)

DIAGNOSIS PROCEDURE

STEP 1. M.U.T.-III CAN bus diagnostics
Use the M.U.T.-III to diagnose the CAN bus lines.

Q: Is the check result normal?
YES : Go to Step 2.
NO : Repair the CAN bus line (Refer to GROUP 54F, Diagnosis P.54F-13).

Main Index
Group TOC

STEP 2. Check whether the diagnosis code is reset.

Check again if the diagnosis code is set.
(1) Erase the diagnosis code.
(2) Ignition: "LOCK" (OFF) position to "ON"
(3) On completion, check that the diagnosis code is not reset.

Q: Is the diagnosis code set?
YES : Go to Step 3.
NO : There is an intermittent malfunction such as poor engaged connector(s) or open circuit (Refer to GROUP 00, How to Cope with Intermittent Malfunction P.00-5).

STEP 3. Check the front impact sensor (M.U.T.-III diagnosis code).

Replace front impact sensor (RH) and front impact sensor (LH) (for diagnosis code B1416) (Refer to P.52B-330).
Check the diagnostic trouble code.

Q: Is either diagnosis code B1406 or B1416 set?
YES : Replace the SRS-ECU (Refer to P.52B-332).
NO : The procedure is complete.

Code No.B1407: Front Impact Sensor (RH) Power Supply Circuit System

Front Impact Sensor Circuit

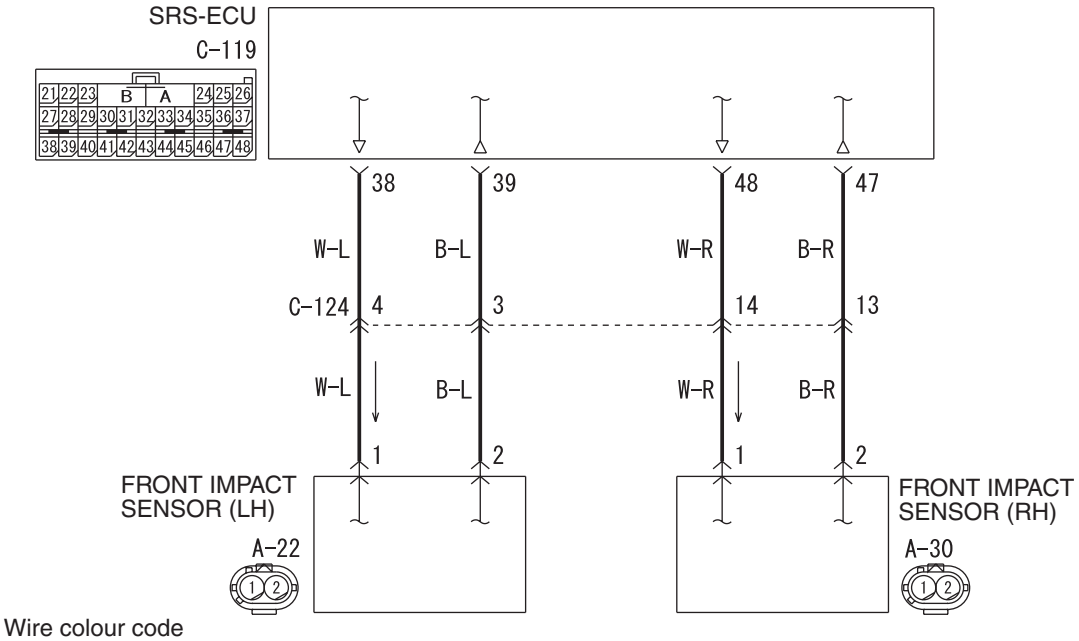

⚠ CAUTION
If diagnosis code B1407 is set in the SRS-ECU, always diagnose the CAN main bus line.

OPERATION

The front impact sensor includes an analogue G-sensor and CPU, etc. The CPU monitors the analogue G-sensor output signal. If the CPU judges that the front air bags should be deployed, it sends a fire signal to the SRS-ECU to deploy the front air bags.

In addition, the CPU diagnoses the internal components of the front impact sensor. If a malfunction occurs, it requests the SRS-ECU to set a diagnosis code.

DIAGNOSIS CODE SET CONDITIONS

This diagnosis code will set when the power supply voltage to the front impact sensor (RH) remains less than a predetermined value for five seconds. However, if the system returns to normal condition, code number B1407 will be erased automatically and the SRS warning lamp will go out.

PROBABLE CAUSES

- Damaged wiring harness or connectors
- Malfunction of the front impact sensor (RH)
- Malfunction of the SRS-ECU

DIAGNOSIS PROCEDURE

STEP 1. M.U.T.-III CAN bus diagnostics

Use the M.U.T.-III to diagnose the CAN bus lines.

Q: Is the check result normal?

YES : Go to Step 2.

NO : Repair the CAN bus line (Refer to GROUP 54F, Diagnosis P.54F-13).

STEP 2. Check whether the diagnosis code is reset.

Check again if the diagnosis code is set.

(1) Erase the diagnosis code.

(2) Ignition: "LOCK" (OFF) position to "ON"

(3) On completion, check that the diagnosis code is not reset.

Q: Is the diagnosis code set?

YES : Go to Step 3.

NO : There is an intermittent malfunction such as poor engaged connector(s) or open circuit (Refer to GROUP 00, How to Cope with Intermittent Malfunction P.00-5).

STEP 3. Check the harness wires for open circuit or short circuit between SRS-ECU connector C-119 (terminal No.47 and 48) and front impact sensor (RH) connector A-30 (terminal No.2 and 1).

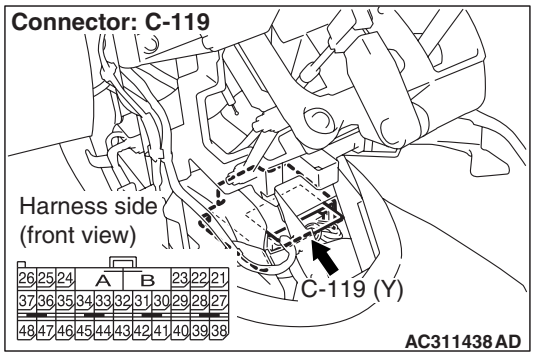

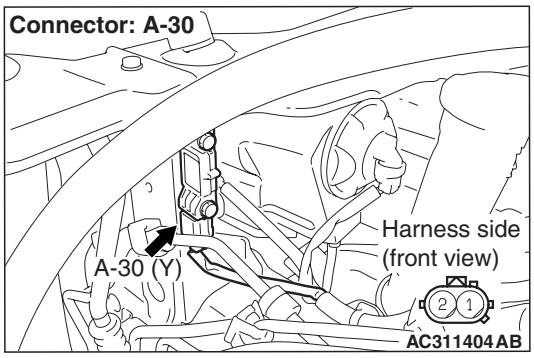

NOTE:

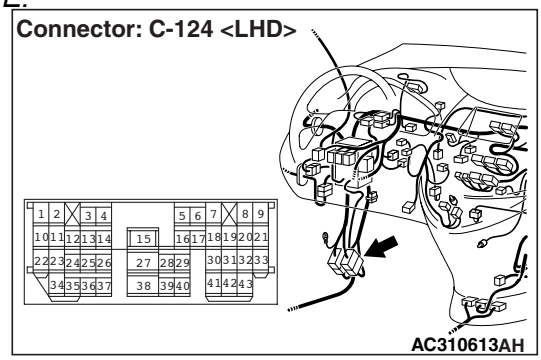

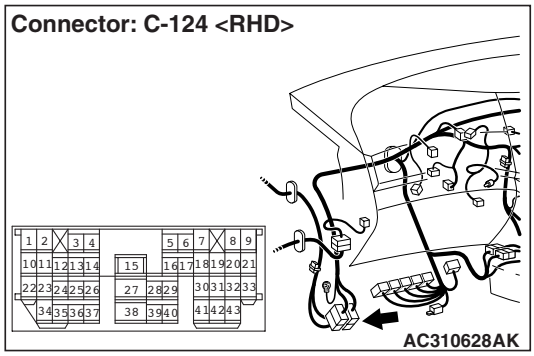

After inspecting intermediate connector C-124 inspect the wiring harness. If the intermediate connector C-124 is damaged, repair or replace it.

Main Index
Group TOC

Q: Are the harness wires between SRS-ECU connector C-119 (terminal No.47 and 48) and front impact sensor (RH) (front) connector A-30 (terminal No.2 and 1) in good condition?

YES : Go to Step 4.

NO : Replace the harness wires between SRS-ECU connector C-119 (terminal No.47 and 48) and front impact sensor (RH) connector A-30 (terminal No.2 and 1).

STEP 4. Check the front impact sensor (RH) (M.U.T.-III diagnosis code).

(1) Disconnect the negative battery terminal.
(2) Replace the front impact sensor (RH) with the front impact sensor (LH).
(3) Connect the negative battery terminal.
(4) Erase diagnosis code memory, and check the diagnosis code.

Q: Is diagnosis code B1407 set?

YES : Replace the SRS-ECU (Refer to P.52B-332).

NO : Replace the front impact sensor (RH) with a new one (Refer to P.52B-330). Then go to Step 5.

STEP 5. Check whether the diagnosis code is reset.

Q: Is diagnosis code B1407 set?

YES : Replace the SRS-ECU (Refer to P.52B-332).

NO : An intermittent malfunction is suspected (Refer to GROUP 00, How to Use Troubleshooting/Inspection Service Points P.00-5).

Code No.B1408: Front Impact Sensor (RH) (Squib) for Power Supply Circuit
Code No.B1409: Front Impact Sensor (RH) (Squib) for Communication System

Front Impact Sensor Circuit

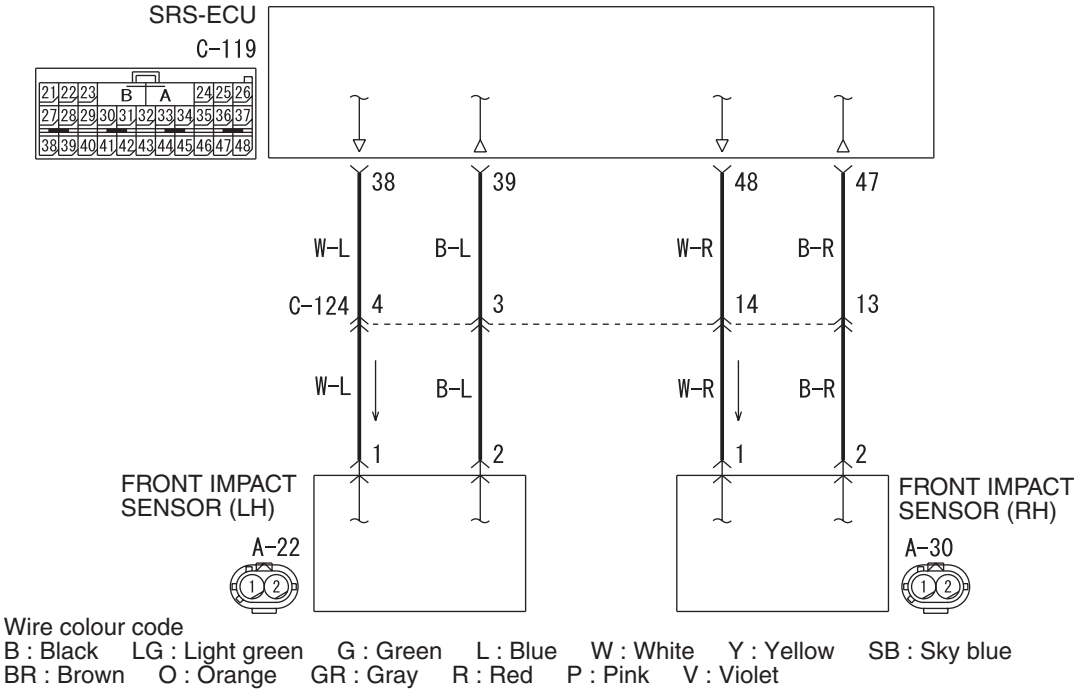

W4X52E004A

Main Index
Group TOC

⚠ CAUTION

If diagnosis code B1408 or B1409 is set in the SRS-ECU, always diagnose the CAN main bus line.

OPERATION

The front impact sensor includes an analogue G-sensor and CPU, etc. The CPU monitors the analogue G-sensor output signal. If the CPU judges that the front air bags should be deployed, it sends a fire signal to the SRS-ECU to deploy the front air bags. In addition, the CPU diagnoses the internal components of the front impact sensor. If a malfunction occurs, it requests the SRS-ECU to set a diagnostic trouble code.

DIAGNOSIS CODE SET CONDITIONS

These diagnosis codes are set if communication between the front impact sensor (RH) and the SRS-ECU is not possible or faulty.

PROBABLE CAUSES

- Damaged wiring harnesses or connectors
- Malfunction of the front impact sensor (RH)
- Malfunction of the SRS-ECU

DIAGNOSIS PROCEDURE

STEP 1. M.U.T.-III CAN bus diagnostics

Use the M.U.T.-III to diagnose the CAN bus lines.

Q: Is the check result normal?

YES : Go to Step 2 .

NO : Repair the CAN bus line (Refer to GROUP 54F, Diagnosis P.54F-13).

STEP 2. Check whether the diagnosis code is reset.

Check again if the diagnosis code is set.

(1) Erase the diagnosis code.
(2) Ignition: "LOCK" (OFF) position to "ON"
(3) On completion, check that the diagnosis code is not reset.

Q: Is the diagnosis code set?

YES : Go to Step 3 .

NO : There is an intermittent malfunction such as poor engaged connector(s) or open circuit (Refer to GROUP 00, How to Cope with Intermittent Malfunction P.00-5).

STEP 3. Check the front impact sensor (RH) (M.U.T.-III diagnosis code).

(1) Disconnect the negative battery terminal.
(2) Replace the front impact sensor (RH) with the front impact sensor (LH).
(3) Connect the negative battery terminal.
(4) Erase diagnosis code from memory, and check the diagnosis code.

Q: Is diagnosis code B1418 or B1419 set?

YES : Replace the front impact sensor (RH) with a new one (Refer to P.52B-330). Go to Step 5 .

NO : Go to Step 4 .

Main Index
Group TOC

STEP 4. Check the harness wires for open circuit or short circuit between SRS-ECU connector C-119 (terminal No.47 and 48) and front impact sensor (RH) connector A-30 (terminal No.2 and 1).

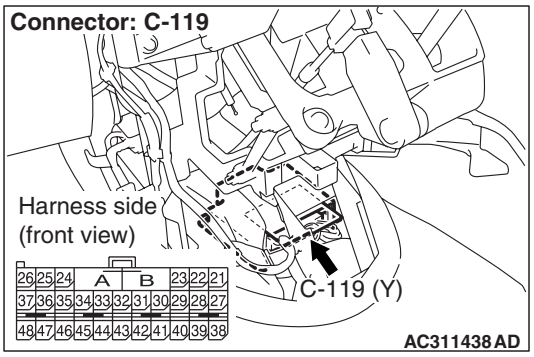

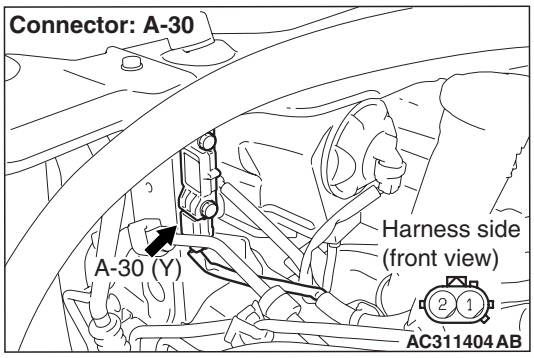

NOTE:

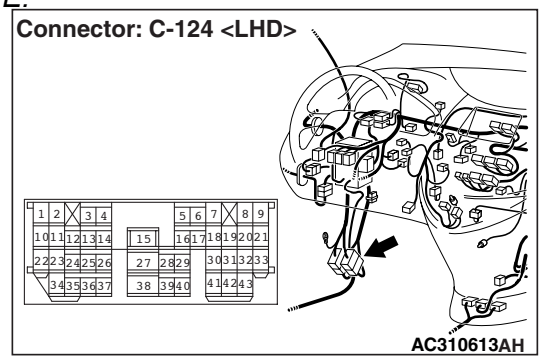

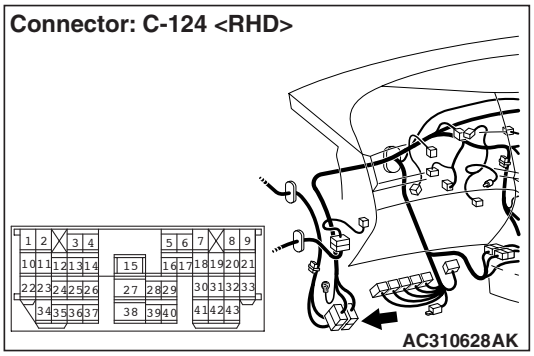

After inspecting intermediate connector C-124 inspect the wiring harness. If the intermediate connector C-124 is damaged, repair or replace it.

Q: Is the check result normal?

YES : Go to Step 5 .

NO : Repair the harness wires between SRS-ECU connector C-119 (terminal No.47 and 48) and front impact sensor (RH) connector A-30 (terminal No.2 and 1).

STEP 5. Check whether the diagnosis code is reset.

Q: Is diagnosis code B1408 or B1409 set?

YES : Replace the SRS-ECU (Refer to P.52B-332).

NO : An intermittent malfunction is suspected (Refer to GROUP 00, How to Use Troubleshooting/Inspection Service Points P.00-5).

Main Index
Group TOC

Code No.B1410: Passenger's (Front) Air Bag Module (1st Squib) System Fault 1 (Short Circuit between Terminals of the Squib Circuit)

Passenger's Air Bag Module Circuit

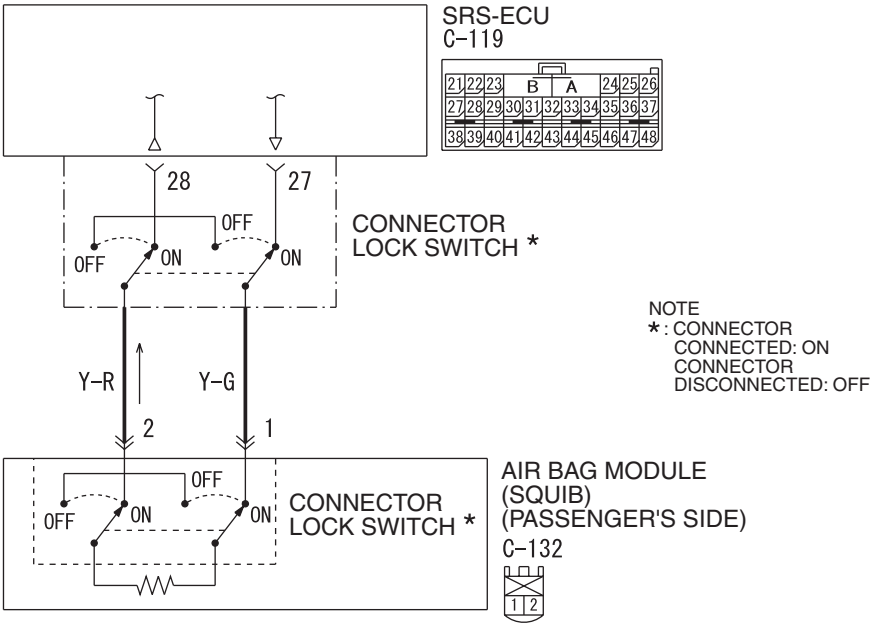

Wire colour code
B : Black LG : Light green G : Green L : Blue W : White Y : Yellow SB : Sky blue
BR : Brown O : Orange GR : Gray R : Red P : Pink V : Violet

W4X52X003A

⚠ CAUTION

If diagnosis code B1410 is set in the SRS-ECU, always diagnose the CAN main bus line.

OPERATION

- The SRS-ECU judges how severe a collision is by detecting signals from the front impact sensors and the front air bag analog G-sensor. If the impact is over a predetermined level, the SRS-ECU sends an ignition signal. At this time, if the front air bag safing G-sensor is on, the SRS air bag will inflate.
- The ignition signal is input to the air bag module to inflate the air bag.

DIAGNOSIS CODE SET CONDITIONS

This diagnosis code is set if there is abnormal resistance between the input terminals of the passenger's (front) air bag module (squib). However, if no diagnosis code reset, the SRS warning lamp will be switched off (diagnosis code will be retained).

PROBABLE CAUSES

- Improper engaged connector or defective short spring*
- Short circuit between the passenger's (front) air bag module (squib) circuit terminals
- Damaged connector(s)
- Malfunction of the SRS-ECU

*NOTE: *: The squib circuit connectors integrate a "short" spring (which prevents the air bag from deploying unintentionally due to static electricity by shorting the positive wire to the earth wire in the squib circuit when the connectors are disconnected). (Refer to P.52B-3). Therefore, if connector C-119 or C-132 is damaged or improperly engaged, the short spring may not be released when the connector is connected.*

Main Index
Group TOC

DIAGNOSIS PROCEDURE

STEP 1. M.U.T.-III CAN bus diagnostics

Use the M.U.T.-III to diagnose the CAN bus lines.

Q: Is the check result normal?

YES : Go to Step 2 .

NO : Repair the CAN bus line (Refer to GROUP 54F, Diagnosis P.54F-13).

STEP 2. Check whether the diagnosis code is reset.

Check again if the diagnosis code is set.

(1) Erase the diagnosis code.

(2) Ignition: "LOCK" (OFF) position to "ON"

(3) On completion, check that the diagnosis code is not reset.

Q: Is the diagnosis code set?

YES : Go to Step 3 .

NO : There is an intermittent malfunction such as poor engaged connector(s) or open circuit (Refer to GROUP 00, How to Cope with Intermittent Malfunction P.00-5).

STEP 3. M.U.T.-III diagnosis code

⚠ CAUTION

To prevent damage to M.U.T.-III, always turn the ignition switch to the "LOCK" (OFF) position before connecting or disconnecting M.U.T.-III.

(1) Turn the ignition switch to the "ON" position.

(2) Check if the diagnosis code is set.

(3) Turn the ignition switch to the "LOOK" (OFF) position.

Q: Is diagnosis code B1519 set?

YES : Go to Step 4 .

NO : Go to Step 5 .

STEP 4. Connector check: SRS-ECU connector C-119

Q: Is the connector correctly engaged?

YES : Go to Step 5 .

NO : Engage the connector correctly. Then go to Step 9 .

STEP 5. Connector check: SRS-ECU connector C-119 and passenger's (front) air bag module connector C-132 (M.U.T.-III diagnosis code.)

(1) Disconnect the negative battery terminal.

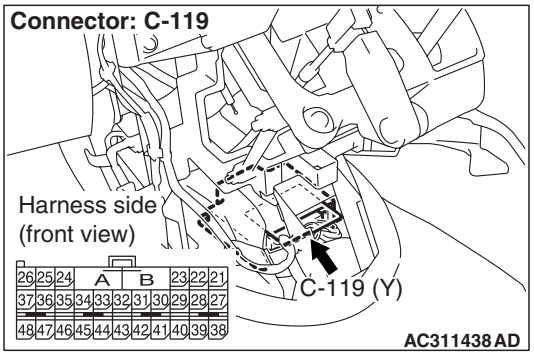

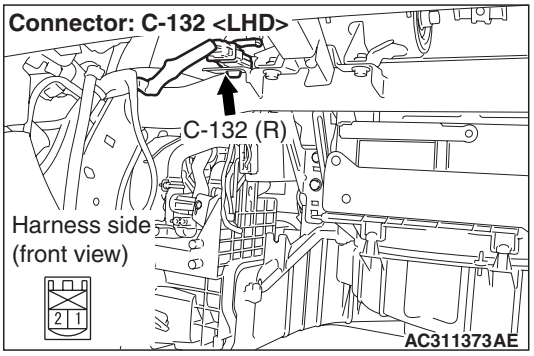

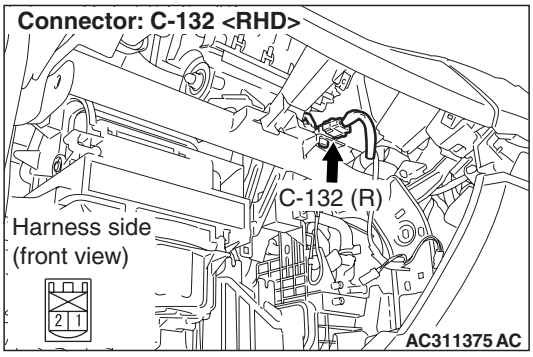

(2) Disconnect connectors C-119 and C-132, and then reconnect them.
(3) Connect the negative battery terminal.
(4) Erase the diagnosis code memory, and check the diagnosis code.

Q: Is diagnosis code B1410 set?

YES : Go to Step 6 .

NO : The procedure is complete. It is assumed that diagnosis code B1410 set as connector C-119 or C-132 was engaged improperly.

STEP 6. Check the passenger's (front) air bag module (M.U.T.-III diagnosis code).

(1) Disconnect the negative battery terminal.

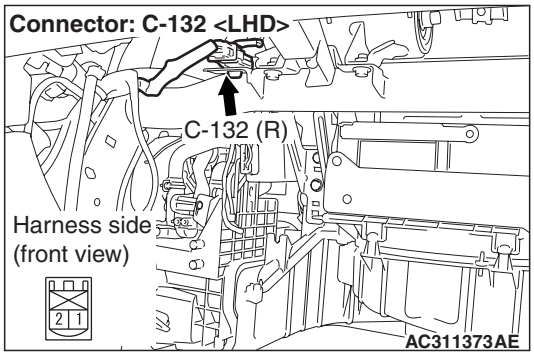

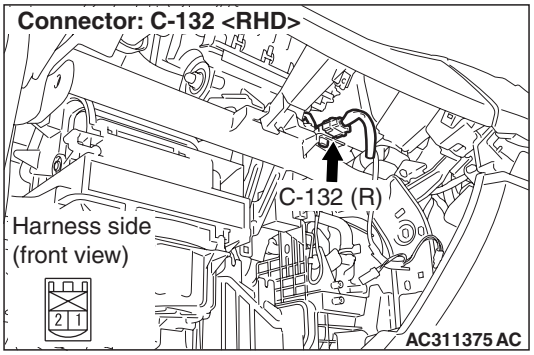

(2) Disconnect the passenger's (front) air bag module connector C-132.

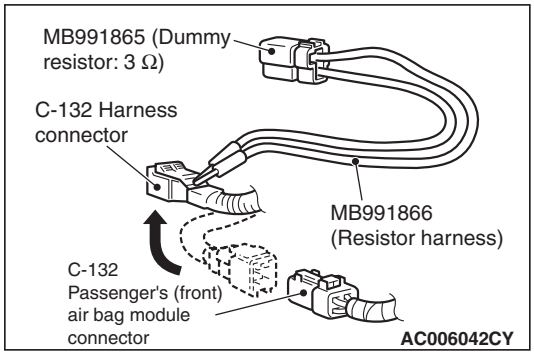

(3) Connect special tool dummy resistor (MB991865) to special tool resistor harness (MB991866).

⚠ CAUTION

Do not insert a test probe into the terminal from its front side directly as the connector contact pressure may be weakened.

(4) Insert special tool MB991866 into the harness side connector C-132 (terminal No.1 and 2) by backprobing.
(5) Connect the negative battery terminal.
(6) Erase the diagnosis code memory, and check the diagnosis code.

Q: Is the checked diagnosis code set?

YES : . Go to Step 7 .

NO : . Replace the passenger's (front) air bag module (Refer to P.52B-334). Then go to Step 9 .

STEP 7. Check the passenger's (front) air bag module circuit at SRS-ECU connector C-119.

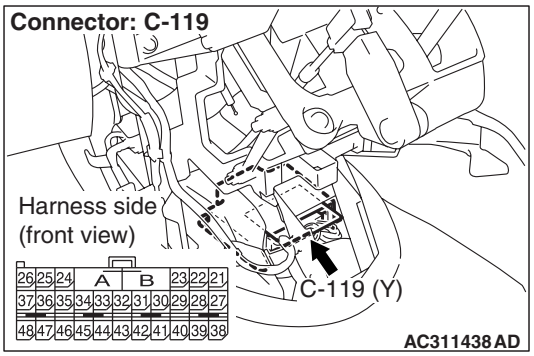

(1) Disconnect SRS-ECU connector C-119.

⚠ DANGER

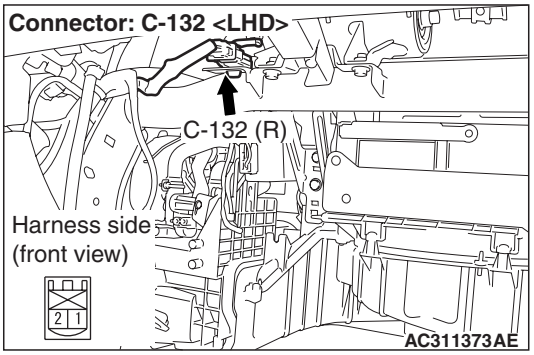

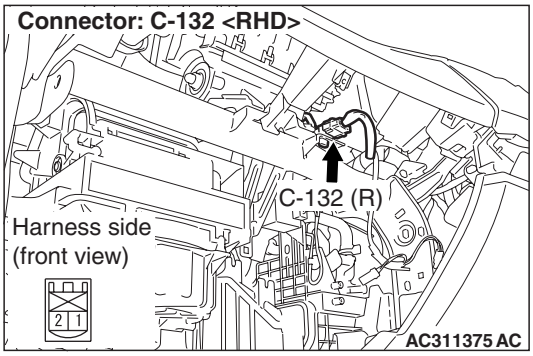

To prevent the air bag from deploying unintentionally, disconnect the passenger's (front) air bag module connector C-132 to short the squib circuit.

(2) Disconnect the passenger's (front) air bag module connector C-132.

⚠ CAUTION

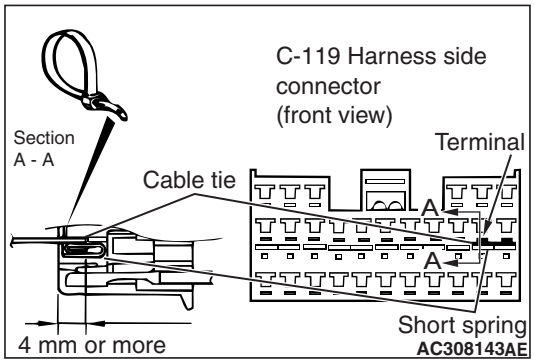

Insert an insulator such as a cable tie to a depth of 4mm or more, otherwise the short spring will not be released.

(3) Insert a cable tie [3 mm wide, 0.5 mm thick] between terminals 27 and 28, and the short spring to release the short spring.

⚠ CAUTION

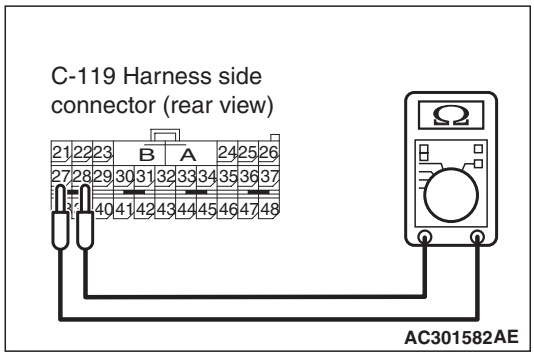

Do not insert a test probe into the terminal from its front side directly as the connector contact pressure may be weakened.

(4) Check for continuity between C-119 harness side connector terminals 27 and 28.

OK: Open circuit

Q: Is the check result normal?

YES : Erase the diagnosis code memory, and check the diagnosis code. If diagnosis code B1410 set, replace the SRS-ECU (Refer to P.52B-332). Then go to Step 9 .

NO : Go to Step 8 .

Main Index
Group TOC

STEP 8. Check the harness for short circuit between SRS-ECU connector C-119 (terminal No.27 and 28) and passenger's (front) air bag module connector C-132 (terminal No.1 and 2).

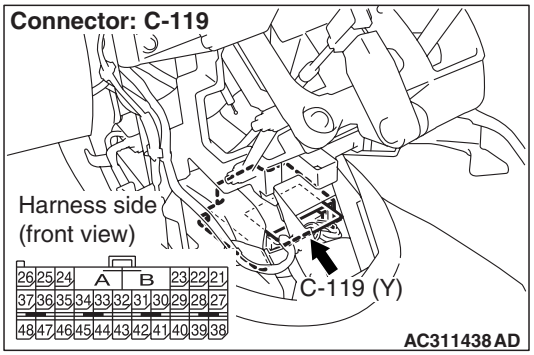

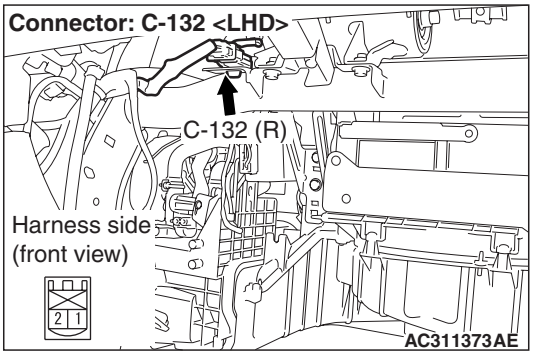

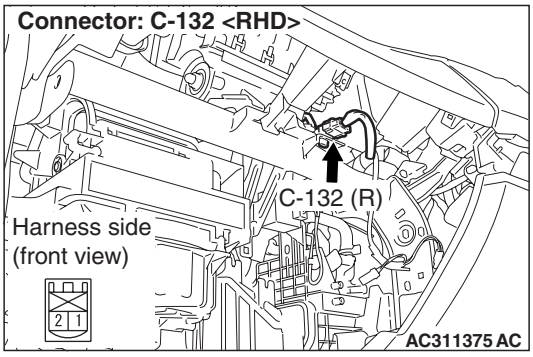

Q: Are harness wires between SRS-ECU connector C-119 (terminal No.27 and 28) and passenger's (front) air bag module connector C-132 (terminal No.1 and 2) in good condition?

YES : . Go to Step 9 .

NO : . Replace the harness wires between SRS-ECU connector C-119 and passenger’s (front) air bag module connector C-132. Then go to Step 9 .

STEP 9. Check whether the diagnosis code is reset.

Q: Is diagnosis code B1410 set?

YES : Return to Step 1 .

NO : The procedure is complete.

Main Index
Group TOC

Code No.B1411: Passenger's (Front) Air Bag Module (1st Squib) System Fault 2 (Open in the Squib Circuit)

Passenger's Air Bag Module Circuit

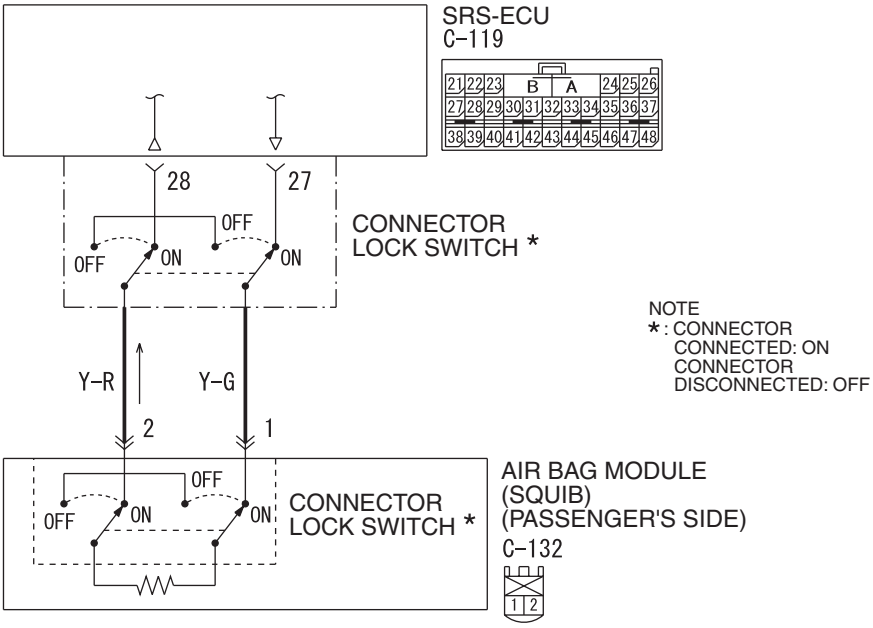

Wire colour code
B : Black LG : Light green G : Green L : Blue W : White Y : Yellow SB : Sky blue
BR : Brown O : Orange GR : Gray R : Red P : Pink V : Violet

W4X52X003A

⚠ CAUTION

If diagnosis code B1411 is set in the SRS-ECU, always diagnose the CAN main bus line.

OPERATION

- The SRS-ECU judges how severe a collision is by detecting signals from the front impact sensors and the front air bag analogue G-sensor. If the impact is over a predetermined level, the SRS-ECU sends an ignition signal. At this time, if the front air bag safing G-sensor is on, the SRS air bag will inflate.
- The ignition signal is input to the air bag module to inflate the air bag.

DIAGNOSIS CODE SET CONDITIONS

This diagnosis code is set if there is abnormal resistance between the input terminals of the passenger's (front) air bag module (squib). However, if no diagnosis code reset, the SRS warning lamp will be switched off (diagnosis code will be retained).

PROBABLE CAUSES

- Open circuit in the passenger's (front) air bag module (squib) circuit
- Improper connector contact
- Malfunction of the SRS-ECU

DIAGNOSIS PROCEDURE

STEP 1. M.U.T.-III CAN bus diagnostics

Use the M.U.T.-III to diagnose the CAN bus lines.

Q: Is the check result normal?

YES : Go to Step 2 .

NO : Repair the CAN bus line (Refer to GROUP 54F, Diagnosis P.54F-13).

STEP 2. Check whether the diagnosis code is reset.

Check again if the diagnosis code is set.

(1) Erase the diagnosis code.
(2) Ignition: "LOCK" (OFF) position to "ON"
(3) On completion, check that the diagnosis code is not reset.

Q: Is the diagnosis code set?

YES : Go to Step 3 .

NO : There is an intermittent malfunction such as poor engaged connector(s) or open circuit (Refer to GROUP 00, How to Cope with Intermittent Malfunction P.00-5).

STEP 3. Check the passenger's (front) air bag module (M.U.T.-III diagnosis code).

(1) Disconnect the negative battery terminal.

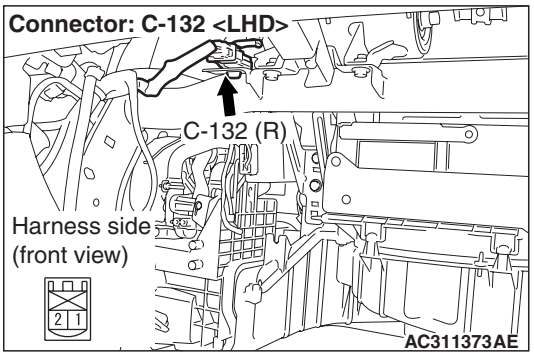

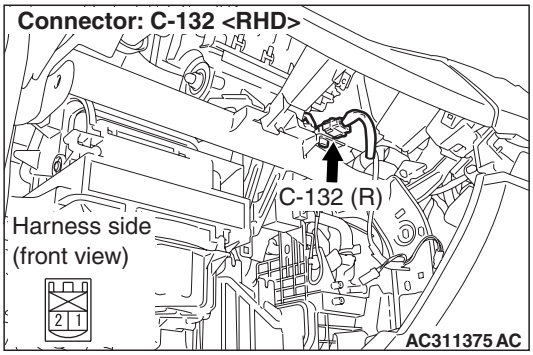

(2) Disconnect the passenger's (front) air bag module connector C-132.

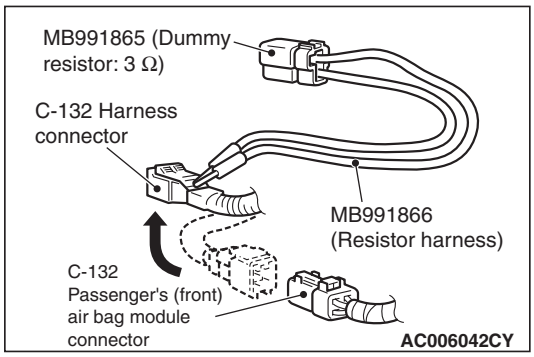

(3) Connect special tool dummy resistor (MB991865) to special tool resistor harness (MB991866).

⚠ CAUTION

Do not insert a test probe into the terminal from its front side directly, as the connector contact pressure may be weakened.

(4) Insert special tool MB991866 into the harness side connector C-132 (terminal No.1 and 2) by backprobing.
(5) Connect the negative battery terminal.
(6) Erase the diagnosis code memory, and check the diagnosis code.

Q: Is the checked diagnosis code set?

YES : Go to Step 4 .

NO : Replace the passenger's (front) air bag module (Refer to P.52B-334). Then go to Step 5 .

STEP 4. Resistance measurement between SRS-ECU connector C-119 (terminal No.27 and 28) and the passenger's (front) air bag module connector C-132 (terminal No.1 and 2).

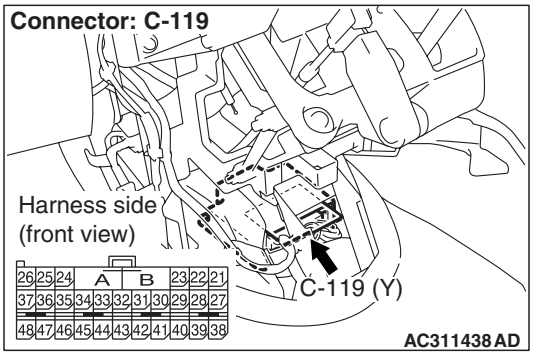

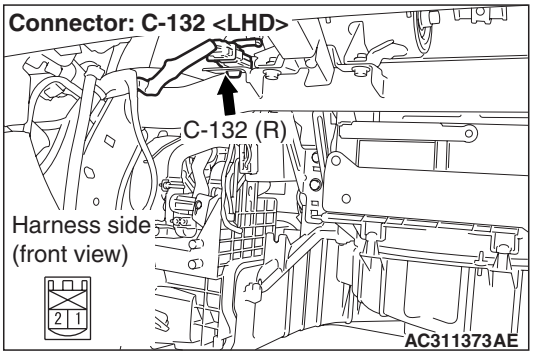

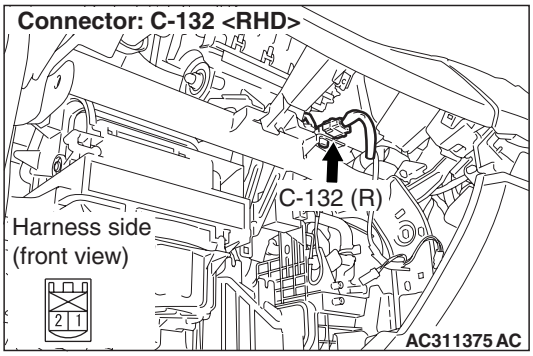

(1) Disconnect SRS-ECU connector C-119 and passenger's (front) air bag module connector C-132.

⚠ CAUTION

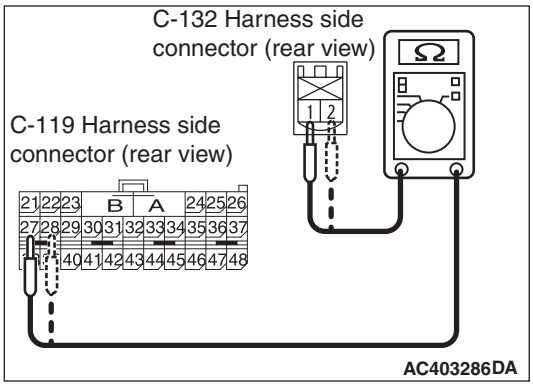

Do not insert a test probe into the terminal from its front side directly as the connector contact pressure may be weakened.

(2) Check for continuity between the following terminals.
- SRS-ECU connector C-119 (terminal No.27) and the passenger's (front) air bag module connector C-132 (terminal No.1)
- SRS-ECU connector C-119 (terminal No.28) and the passenger's (front) air bag module connector C-132 (terminal No.2)

OK: Less than 2 Ω

Q: Are the check results normal?

YES : Erase the diagnosis code memory, and check the diagnosis code. If diagnosis code B1411 set, replace the SRS-ECU (Refer to P.52B-332). Then go to Step 5 .

NO : Replace the harness wires between SRS-ECU connector C-119 and passenger's (front) air bag module connector C-132. Then go to Step 5 .

STEP 5. Check whether the diagnosis code is reset.

Q: Is diagnosis code B1411set?

YES : Return to Step 1 .

NO : The procedure is complete.

Main Index
Group TOC

Code No.B1412: Passenger's (Front) Air Bag Module (1st Squib) System Fault for Earth Circuit (Short-Circuited to Earth)

Passenger's Air Bag Module Circuit

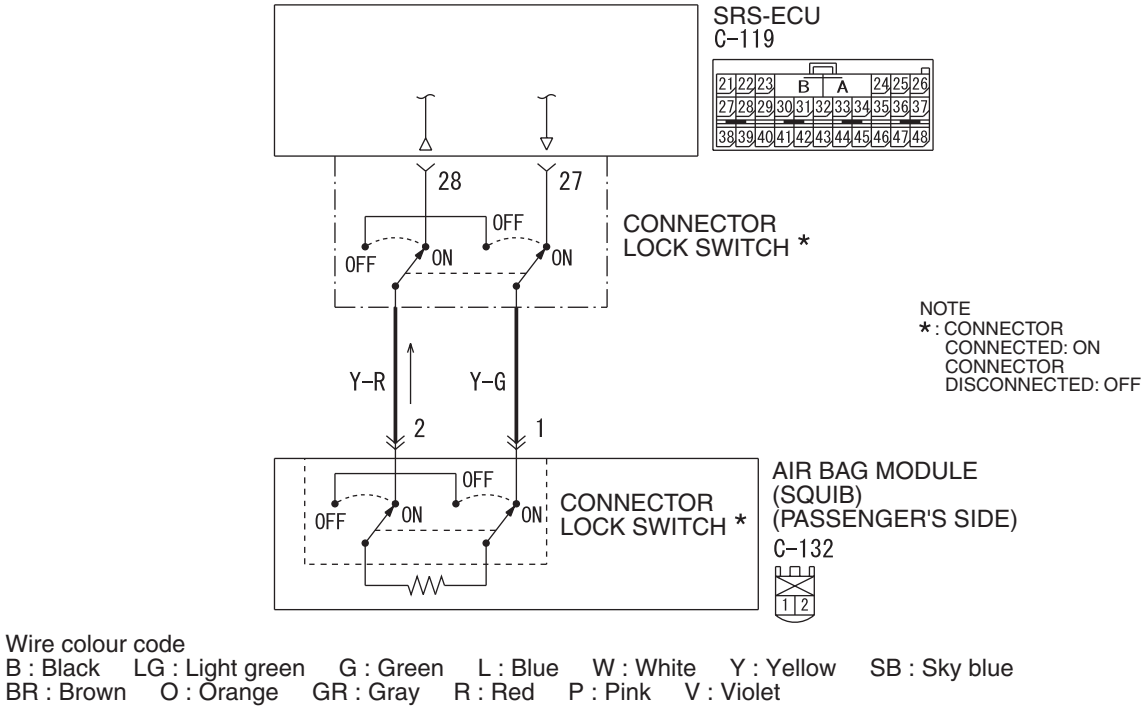

Wire colour code
B : Black LG : Light green G : Green L : Blue W : White Y : Yellow SB : Sky blue
BR : Brown O : Orange GR : Gray R : Red P : Pink V : Violet

W4X52X003A

⚠ CAUTION

If diagnosis code B1412 is set in the SRS-ECU, always diagnose the CAN main bus line.

OPERATION

- The SRS-ECU judges how severe a collision is by detecting signals from the front impact sensors and the front air bag analogue G-sensor. If the impact is over a predetermined level, the SRS-ECU sends an ignition signal. At this time, if the front air bag safing G-sensor is on, the SRS air bag will inflate.
- The ignition signal is input to the air bag module via the clock spring to inflate the air bag.

DIAGNOSIS CODE SET CONDITIONS

This diagnosis code is set if there is abnormal resistance between the input terminals of the passenger's (front) air bag module (squib). However, if no diagnosis code resets, the SRS warning lamp will be switched off (diagnosis code will be retained).

PROBABLE CAUSES

- Damaged harness wires and connectors
- Short to the ground in the passenger's (front) air bag module (squib) harness
- Malfunction of the SRS-ECU

DIAGNOSIS PROCEDURE

STEP 1. M.U.T.-III CAN bus diagnostics

Use the M.U.T.-III to diagnose the CAN bus lines.

Q: Is the check result normal?

YES : Go to Step 2 .

NO : Repair the CAN bus line (Refer to GROUP 54F, Diagnosis P.54F-13).

Main Index
Group TOC

STEP 2. Check whether the diagnosis code is reset.

Check again if the diagnosis code is set.
(1) Erase the diagnosis code.
(2) Ignition: "LOCK" (OFF) position to "ON"
(3) On completion, check that the diagnosis code is not reset.

Q: Is the diagnosis code set?
YES : Go to Step 3 .
NO : There is an intermittent malfunction such as poor engaged connector(s) or open circuit (Refer to GROUP 00, How to Cope with Intermittent Malfunction P.00-5).

STEP 3. Check the passenger's (front) air bag module (M.U.T.-III diagnosis code).

(1) Disconnect the negative battery terminal.

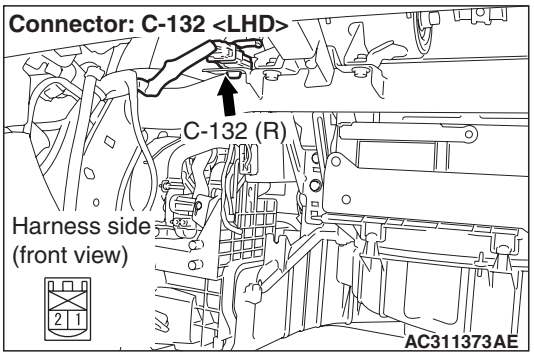

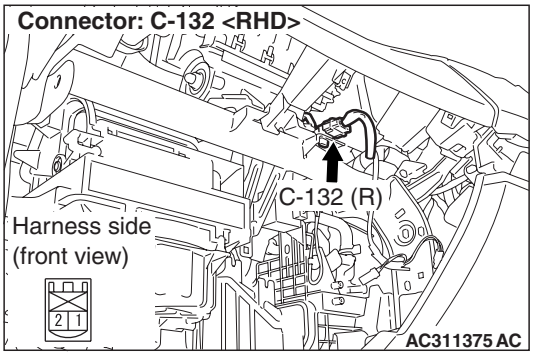

(2) Disconnect the passenger's (front) air bag module connector C-132.

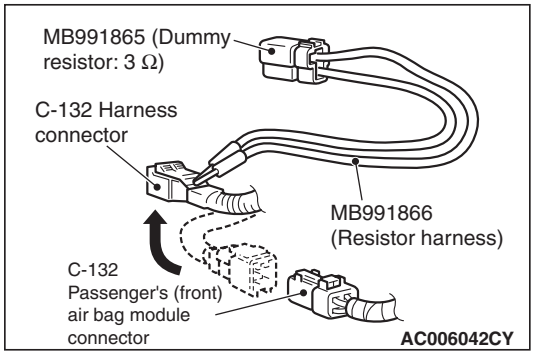

(3) Connect special tool dummy resistor (MB991865) to special tool resistor harness (MB991866).

⚠ CAUTION

Do not insert a test probe into the terminal from its front side directly, as the connector contact pressure may be weakened.

(4) Insert special tool MB991866 into the harness side connector C-132 (terminal No.1 and 2) by backprobing.
(5) Connect the negative battery terminal.
(6) Erase the diagnosis code memory, and check the diagnosis code.

Q: Is the checked diagnosis code set?
YES : Go to Step 4 .
NO : Replace the passenger's (front) air bag module (Refer to P.52B-334). Then go to Step 5 .

STEP 4. Check the passenger's (front) air bag module circuit. Resistance measurement at the SRS-ECU connector C-119.

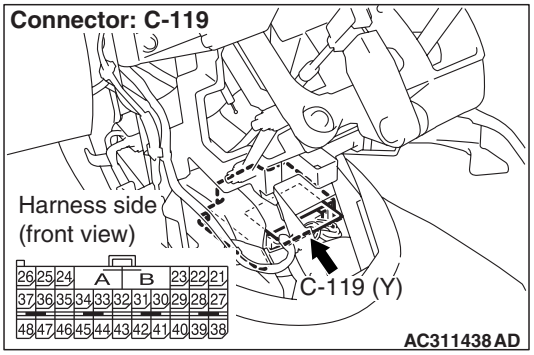

(1) Disconnect SRS-ECU connector C-119.

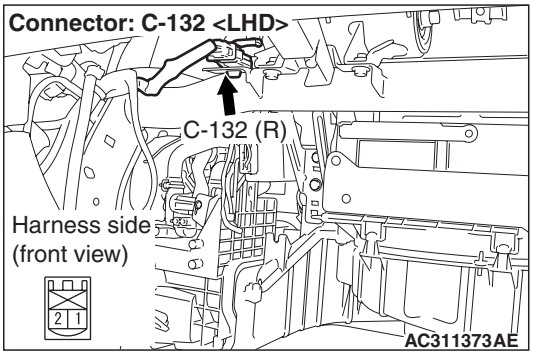

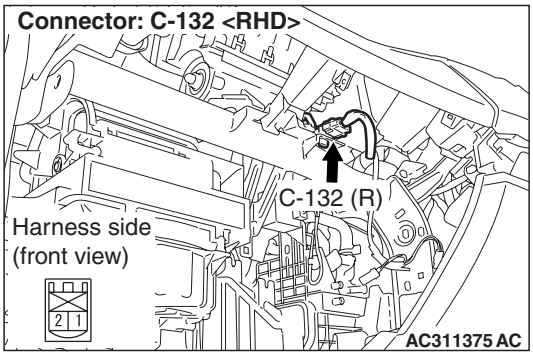

(2) Disconnect the passenger's (front) air bag module connector C-132.

⚠ CAUTION

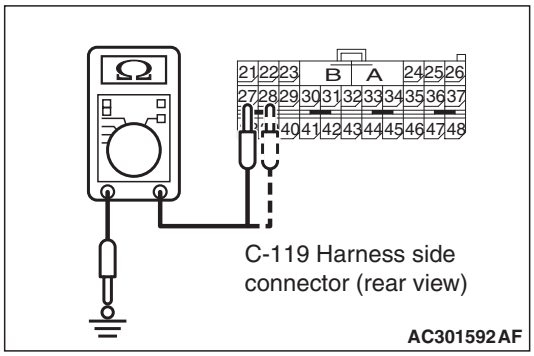

Do not insert a test probe into the terminal from its front side directly, as the connector contact pressure may be weakened.

(3) Check for continuity between C-119 harness side connector terminals 27 and 28, and body earth.

OK: Open circuit

Q: Is the check result normal?

YES : Erase the diagnosis code memory, and check the diagnosis code. If diagnosis code B1412 sets, replace the SRS-ECU (Refer to P.52B-332). Then go to Step 5 .

NO : Replace the harness wires between SRS-ECU connector C-119 and passenger's (front) air bag module connector C-132. Then go to Step 5 .

STEP 5. Check whether the diagnosis code is reset.

Q: Is diagnosis code B1412 set?

YES : Return to Step 1 .

NO : The procedure is complete.

Main Index
Group TOC

Code No.B1413: Passenger's (Front) Air Bag Module (1st Squib) System Fault for Power Supply Circuit (Short-Circuited to Power Supply)

Passenger's Air Bag Module Circuit

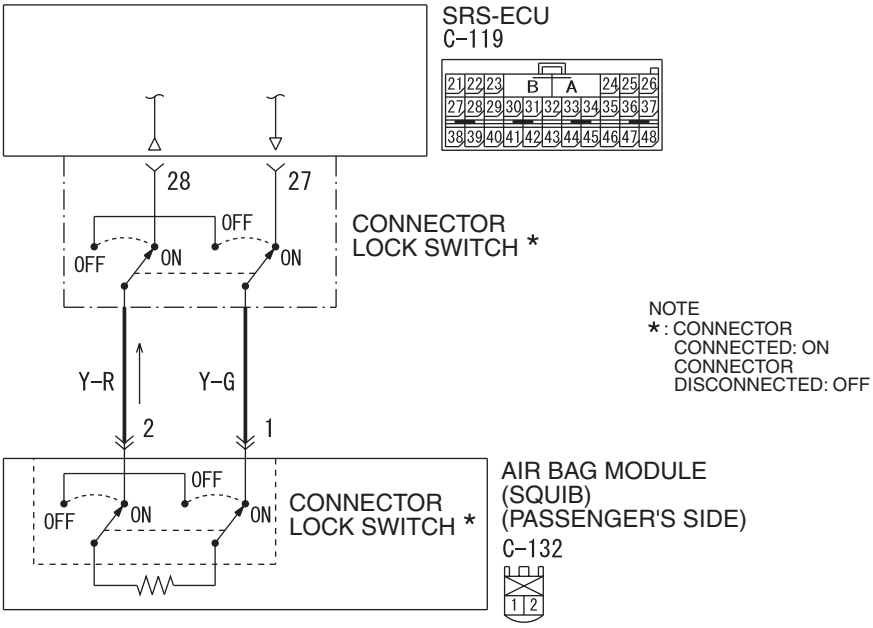

Wire colour code
B : Black LG : Light green G : Green L : Blue W : White Y : Yellow SB : Sky blue
BR : Brown O : Orange GR : Gray R : Red P : Pink V : Violet

W4X52X003A

⚠ CAUTION

If diagnosis code B1413 is set in the SRS-ECU, always diagnose the CAN main bus line.

OPERATION

- The SRS-ECU judges how severe a collision is by detecting signals from the front impact sensors and the front air bag analogue G-sensor. If the impact is over a predetermined level, the SRS-ECU sends an ignition signal. At this time, if the front air bag safing G-sensor is on, the SRS air bag will inflate.
- The ignition signal is input to the air bag module via the clock spring to inflate the air bag.

DIAGNOSIS CODE SET CONDITIONS

This diagnosis code is set if there is abnormal resistance between the input terminals of the passenger's (front) air bag module (squib). However, if no diagnosis code resets, the SRS warning lamp will be switched off (diagnosis code will be retained).

PROBABLE CAUSES

- Damaged harness wires and connectors
- Short to the power supply in the passenger's (front) air bag module (squib) harness
- Malfunction of the SRS-ECU

DIAGNOSIS PROCEDURE

STEP 1. M.U.T.-III CAN bus diagnostics

Use the M.U.T.-III to diagnose the CAN bus lines.

Q: Is the check result normal?

YES : Go to Step 2.

NO : Repair the CAN bus line (Refer to GROUP 54F, Diagnosis P.54F-13).

STEP 2. Recheck for diagnostic trouble code.

Check again if the diagnosis code is set.

(1) Erase the diagnosis code.
(2) Ignition: "LOCK" (OFF) position to "ON"
(3) On completion, check that the diagnosis code is not reset.

Q: Is the diagnosis code set?

YES : Go to Step 3.

NO : There is an intermittent malfunction such as poor engaged connector(s) or open circuit (Refer to GROUP 00, How to Cope with Intermittent Malfunction P.00-5).

STEP 3. Check the passenger's (front) air bag module (M.U.T.-III diagnosis code).

(1) Disconnect the negative battery terminal.

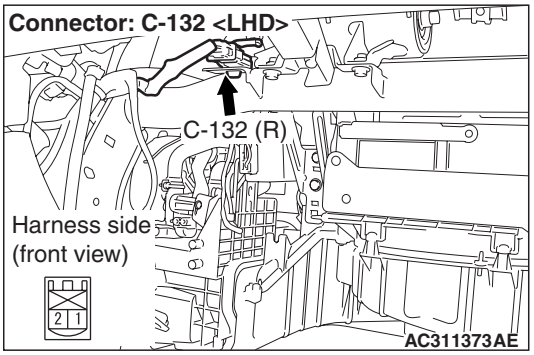

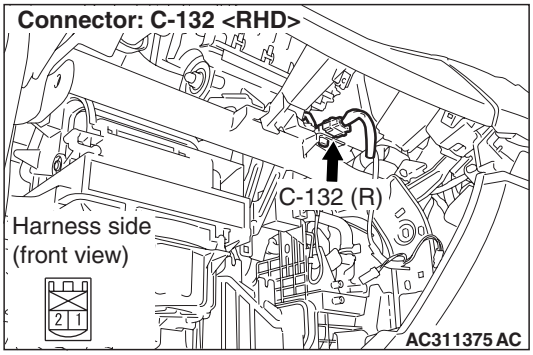

(2) Disconnect the passenger's (front) air bag module connector C-132.

(3) Connect special tool dummy resistor (MB991865) to special tool resistor harness (MB991866).

⚠ CAUTION

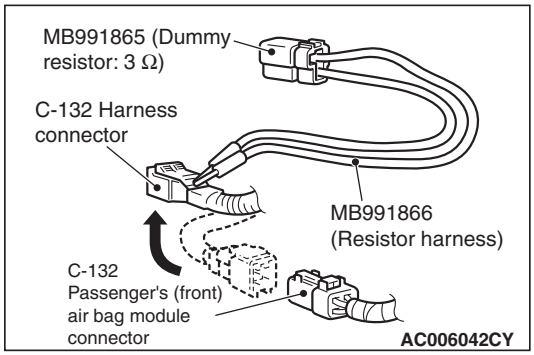

Do not insert a test probe into the terminal from its front side directly, as the connector contact pressure may be weakened.

(4) Insert special tool MB991866 into the harness side connector C-132 (terminal No.1 and 2) by backprobing.
(5) Connect the negative battery terminal.
(6) Erase the diagnosis code memory, and check the diagnosis code.

Q: Is the checked diagnosis code set?

YES : Go to Step 4.

NO : Replace the passenger's (front) air bag module (Refer to P.52B-334). Then go to Step 5.

Main Index
Group TOC

STEP 4. Check the passenger's (front) air bag module circuit. Measure the voltage at the SRS-ECU connector C-119.

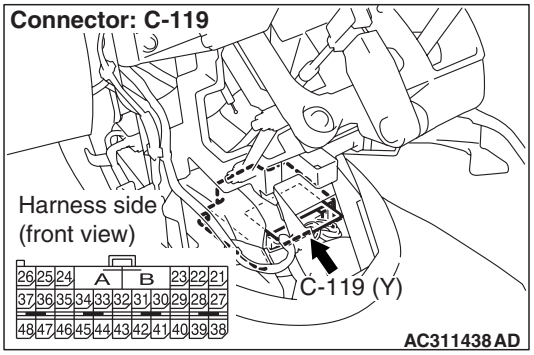

(1) Disconnect SRS-ECU connector C-119.

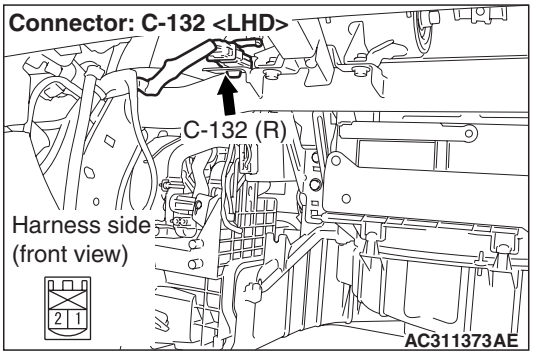

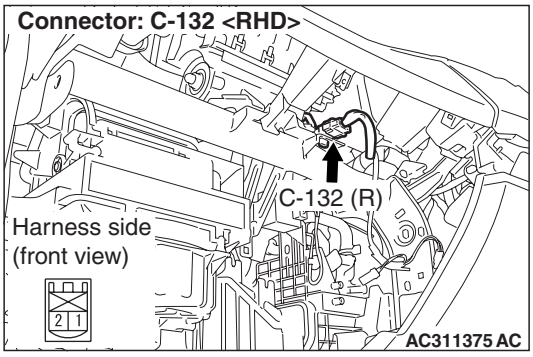

(2) Disconnect the passenger's (front) air bag module connector C-132.

(3) Turn the ignition switch to the "ON" position.

⚠ CAUTION

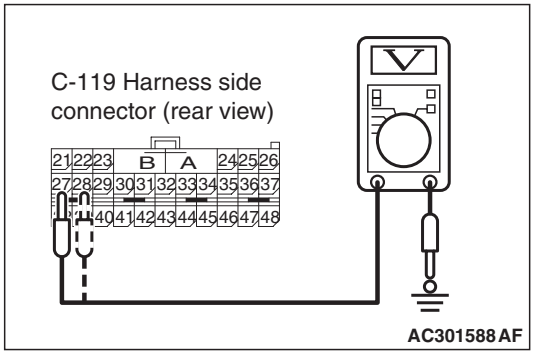

Do not insert a test probe into the terminal from its front side directly, as the connector contact pressure may be weakened.

(4) Measure the voltage between C-119 harness side connector terminals 27 and 28 and body earth.

OK: 0 V

Q: Is the check result normal?

YES : Erase the diagnosis code memory, and check the diagnosis code. If diagnosis code B1413 sets, replace the SRS-ECU (Refer to P.52B-332). Then go to Step 5.

NO : Replace the harness wires between SRS-ECU connector C-119 and passenger's (front) air bag module connector C-132. Then go to Step 5.

STEP 5. Check whether the diagnosis code is reset.

Q: Is diagnosis code B1413 set?

YES : Return to Step 1.

NO : The procedure is complete.

Main Index
Group TOC

Code No.B1417: Front Impact Sensor (LH) Power Supply Circuit System

Front Impact Sensor Circuit

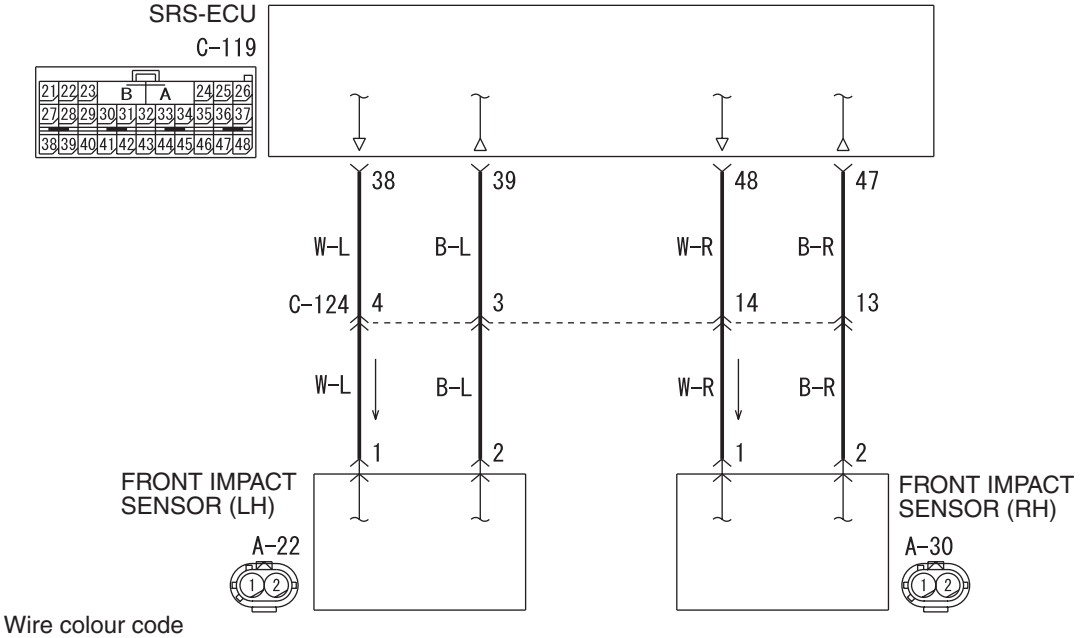

Wire colour code
B : Black LG : Light green G : Green L : Blue W : White Y : Yellow SB : Sky blue
BR : Brown O : Orange GR : Gray R : Red P : Pink V : Violet

W4X52E004A

⚠ CAUTION

If diagnosis code B1417 is set in the SRS-ECU, always diagnose the CAN main bus line.

OPERATION

The front impact sensor includes an analogue G-sensor and CPU, etc. The CPU monitors the analogue G-sensor output signal. If the CPU judges that the front air bags should be deployed, it sends a fire signal to the SRS-ECU to deploy the front air bags. In addition, the CPU diagnoses the internal components of the front impact sensor. If a malfunction occurs, it requests the SRS-ECU to set a diagnosis code.

DIAGNOSIS CODE SET CONDITIONS

This diagnosis code will set when the power supply voltage to the front impact sensor (LH) remains less than a predetermined value for five seconds. However, if the system returns to normal condition, code number B1417 will be erased automatically and the SRS warning lamp will go out.

PROBABLE CAUSES

- Damaged wiring harness or connectors
- Malfunction of the front impact sensor (LH)
- Malfunction of the SRS-ECU

DIAGNOSIS PROCEDURE

STEP 1. M.U.T.-III CAN bus diagnostics

Use the M.U.T.-III to diagnose the CAN bus lines.

Q: Is the check result normal?

YES : Go to Step 2.

NO : Repair the CAN bus line (Refer to GROUP 54F, Diagnosis P.54F-13).

STEP 2. Check whether the diagnosis code is reset.

Check again if the diagnosis code is set.

(1) Erase the diagnosis code.
(2) Ignition: "LOCK" (OFF) position to "ON"
(3) On completion, check that the diagnosis code is not reset.

Q: Is the diagnosis code set?

YES : Go to Step 3.

NO : There is an intermittent malfunction such as poor engaged connector(s) or open circuit (Refer to GROUP 00, How to Cope with Intermittent Malfunction P.00-5).

STEP 3. Check the harness wires for open circuit or short circuit between SRS-ECU connector C-119 (terminal No.38 and 39) and front impact sensor (LH) connector A-22 (terminal No.1 and 2).

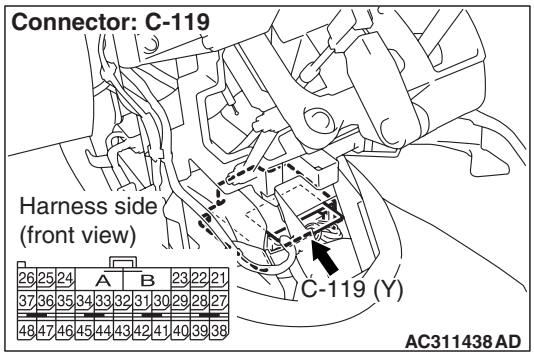

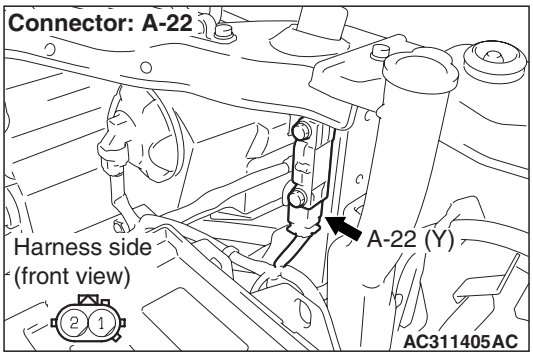

NOTE:

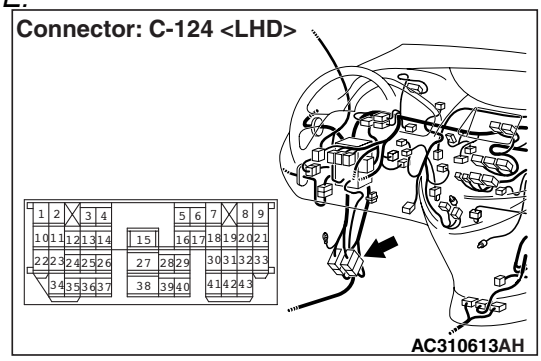

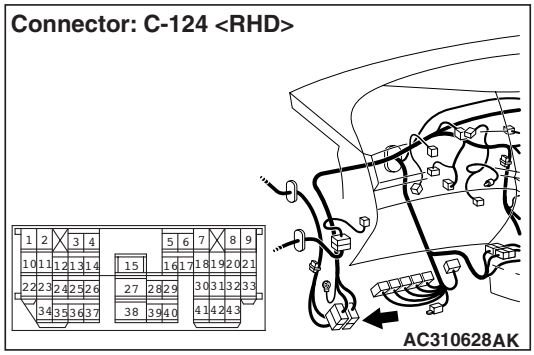

After inspecting intermediate connector C-124 inspect the wiring harness. If the intermediate connector C-124 is damaged, repair or replace it.

Main Index
Group TOC

Q: Are the harness wires between SRS-ECU connector C-119 (terminal No.38 and 39) and front impact sensor (LH) (front) connector A-22 (terminal No.1 and 2) in good condition?

YES : Go to Step 4.

NO : Repair the harness wires between SRS-ECU connector C-119 (terminal No.38 and 39) and front impact sensor (LH) connector A-22 (terminal No.1 and 2).

STEP 4. Check the front impact sensor (LH) (M.U.T.-III diagnosis code).

(1) Disconnect the negative battery terminal.
(2) Replace the front impact sensor (LH) with the front impact sensor (RH).
(3) Connect the negative battery terminal.
(4) Erase diagnosis code memory, and check the diagnosis code.

Q: Is diagnosis code B1417 set?

YES : Replace the SRS-ECU (Refer to P.52B-332).

NO : Replace the front impact sensor (LH) with a new one (Refer to P.52B-330). Then go to Step 5.

STEP 5. Check whether the diagnosis code is reset.

Q: Is diagnosis code B1417 set?

YES : Replace the SRS-ECU (Refer to P.52B-332).

NO : An intermittent malfunction is suspected (Refer to GROUP 00, How to Use Troubleshooting/Inspection Service Points P.00-5).

Code No.B1418: Front Impact Sensor (LH) (Squib) for Power Supply Circuit
Code No.B1419: Front Impact Sensor (LH) (Squib) for Communication System

Front Impact Sensor Circuit

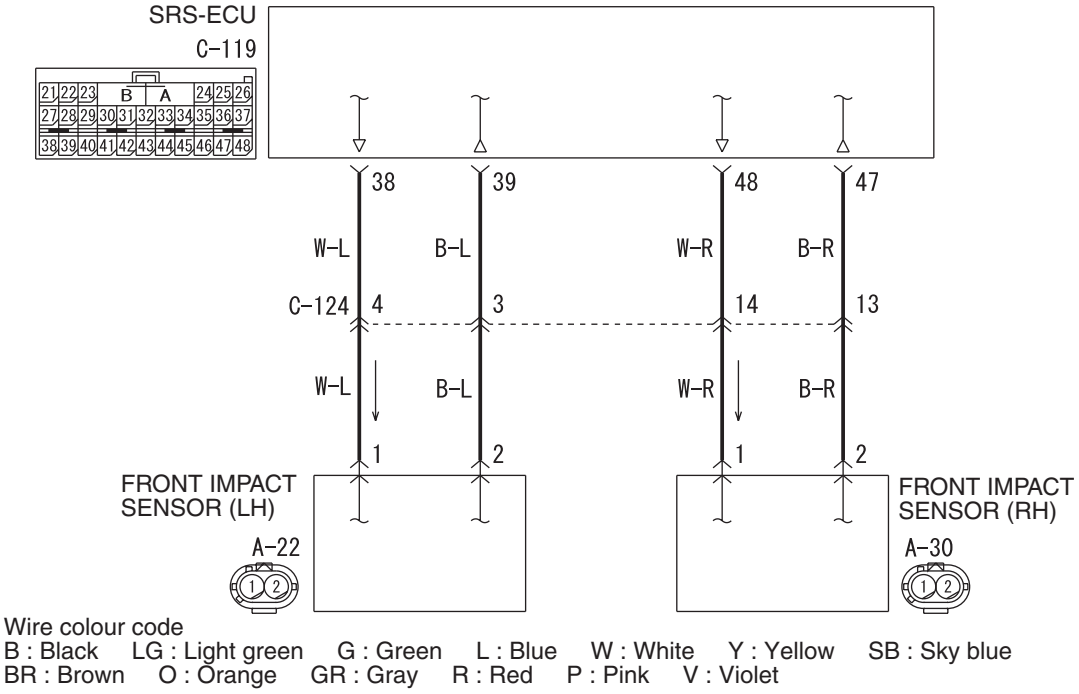

W4X52E004A

⚠ CAUTION

If diagnosis code B1418 or B1419 is set in the SRS-ECU, always diagnose the CAN main bus line.

OPERATION

The front impact sensor includes an analog G-sensor and CPU, etc. The CPU monitors the analogue G-sensor output signal. If the CPU judges that the front air bags should be deployed, it sends a fire signal to the SRS-ECU to deploy the front air bags. In addition, the CPU diagnoses the internal components of the front impact sensor. If a malfunction occurs, it requests the SRS-ECU to set a diagnostic trouble code.

DIAGNOSIS CODE SET CONDITIONS

These diagnosis codes are set if communication between the front impact sensor (LH) and the SRS-ECU is not possible or faulty.

PROBABLE CAUSES

- Damaged wiring harnesses or connectors
- Malfunction of the front impact sensor (LH)
- Malfunction of the SRS-ECU

DIAGNOSIS PROCEDURE

STEP 1. M.U.T.-III CAN bus diagnostics

Use the M.U.T.-III to diagnose the CAN bus lines.

Q: Is the check result normal?

YES : Go to Step 2 .

NO : Repair the CAN bus line (Refer to GROUP 54F, Diagnosis P.54F-13).

STEP 2. Check whether the diagnosis code is reset.

Check again if the diagnosis code is set.

(1) Erase the diagnosis code.
(2) Ignition: "LOCK" (OFF) position to "ON"
(3) On completion, check that the diagnosis code is not reset.

Q: Is the diagnosis code set?

YES : Go to Step 3 .

NO : There is an intermittent malfunction such as poor engaged connector(s) or open circuit (Refer to GROUP 00, How to Cope with Intermittent Malfunction P.00-5).

STEP 3. Check the front impact sensor (LH) (M.U.T.-III diagnosis code).

(1) Disconnect the negative battery terminal.
(2) Replace the front impact sensor (LH) with the front impact sensor (RH).
(3) Connect the negative battery terminal.
(4) Erase diagnosis code from memory, and check the diagnosis code.

Q: Is DTC B1408 or B1409 set?

YES : Replace the front impact sensor (LH) with a new one (Refer to P.52B-330). Go to Step 5 .

NO : Go to Step 4 .

Main Index
Group TOC

STEP 4. Check the harness wires for open circuit or short circuit between SRS-ECU connector C-119 (terminal No.38 and 39) and front impact sensor (LH) connector A-22 (terminal No.1 and 2).

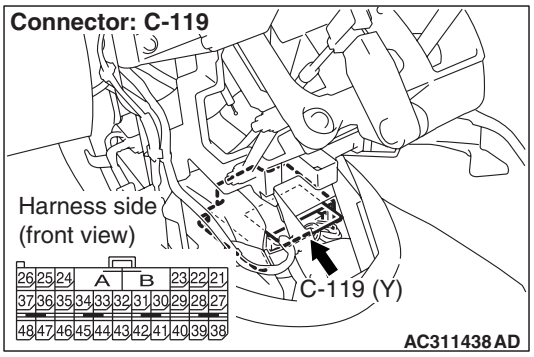

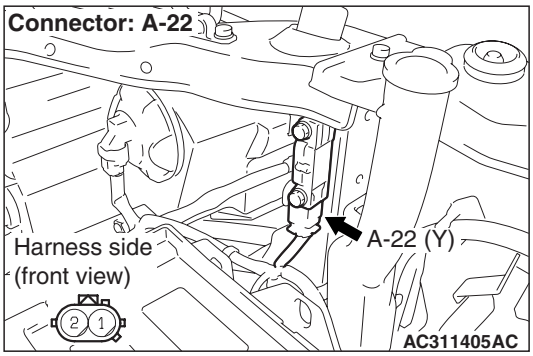

NOTE:

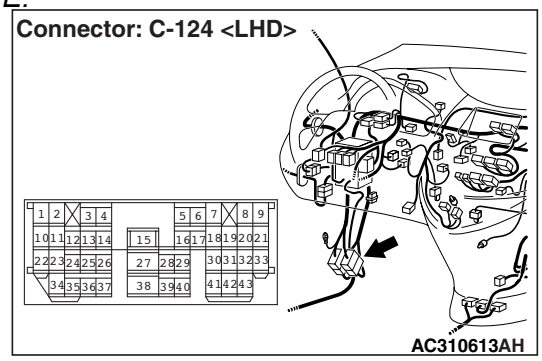

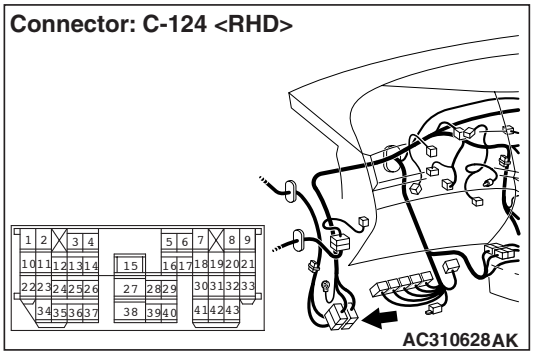

After inspecting intermediate connector C-124 inspect the wiring harness. If the intermediate connector C-124 is damaged, repair or replace it.

Q: Is the check result normal?

YES : Go to Step 5 .

NO : Repair the harness wires between SRS-ECU connector C-119 (terminal No.38 and 39) and front impact sensor (LH) connector A-22 (terminal No.1 and 2).

STEP 5. Check whether the diagnosis code is reset.

Q: Is diagnosis code B1418 or B1419 set?

YES : Replace the SRS-ECU (Refer to P.52B-332).

NO : An intermittent malfunction is suspected (Refer to GROUP 00, How to Use Troubleshooting/Inspection Service Points P.00-5).

Main Index
Group TOC

Code No.B1420: Side-Airbag Module (RH) (Squib) System Fault 1 (Short Circuit between Terminals of the Squib Circuit)

Side-Airbag Module (RH) (Squib) Circuit

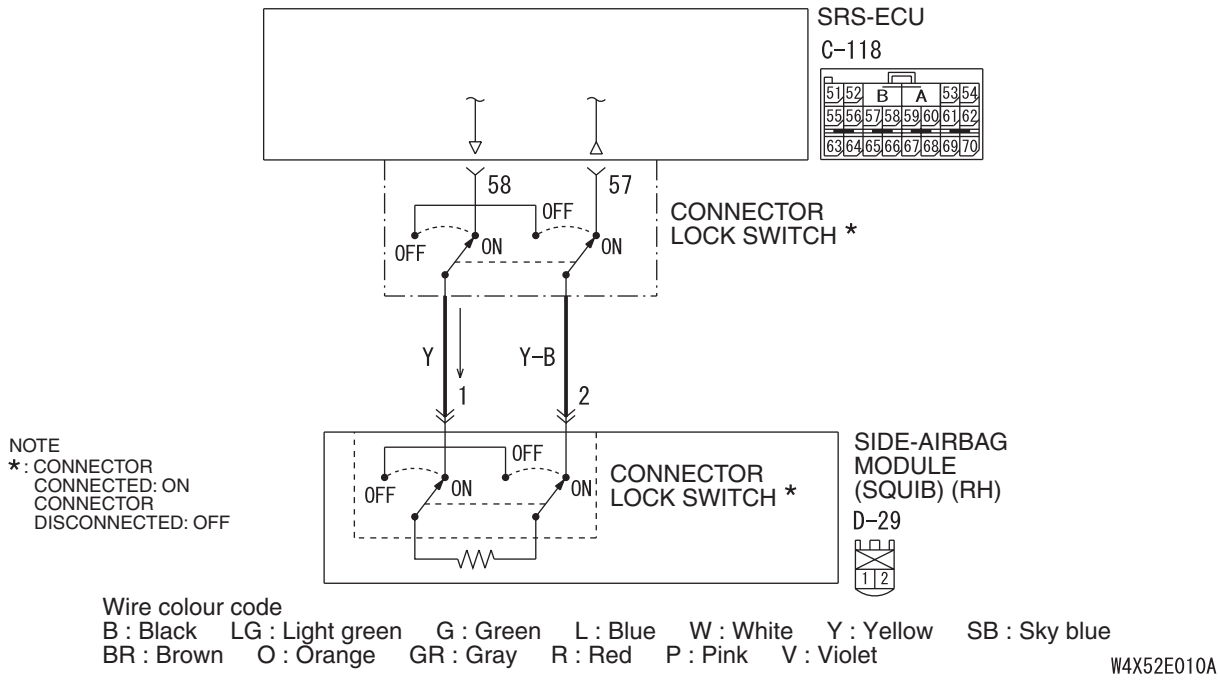

AC503873AB

⚠ CAUTION

If diagnosis code B1420 is set in the SRS-ECU, always diagnose the CAN bus lines.

OPERATION

- The SRS-ECU judges how severe a collision is by detecting signals from the left and right side impact sensors. If the impact is over a predetermined level, the SRS-ECU sends an ignition signal. At this time, if the side-airbag safing G-sensor is on, the SRS side-airbag will inflate.
- The ignition signal is input to the side-airbag module to inflate the side-airbag.

DIAGNOSIS CODE SET CONDITIONS

This diagnosis code is set if there is abnormal resistance between the input terminals of the side-airbag module (RH) (squib).

PROBABLE CAUSES

- Improper engaged connector or defective short spring*
- Short between the side-airbag module (RH) (squib) circuit terminals
- Damaged connector(s)
- Malfunction of the SRS-ECU

*NOTE: *: The squib circuit connectors integrate a "short" spring (which prevents the air bag from deploying unintentionally due to static electricity by shorting the positive wire to the earth wire in the squib circuit when the connectors are disconnected). (Refer to P.52B-3). Therefore, if connector C-118 or D-29 is damaged or improperly engaged, the short spring may not be released when the connector is connected.*

DIAGNOSIS PROCEDURE

STEP 1. M.U.T.-III CAN bus diagnostics

Use the M.U.T.-III to diagnose the CAN bus lines.

Q: Is the check result normal?

YES : Go to Step 2

NO : Repair the CAN bus lines (Refer to GROUP 54F, DiagnosisP.54F-13).

STEP 2. Check whether the diagnosis code is reset.

Check again if the diagnosis code is set.

(1) Erase the diagnosis code.

(2) Ignition: "LOCK" (OFF) position to "ON"

(3) On completion, check that the diagnosis code is not reset.

Q: Is the diagnosis code set?

YES : Go to Step 3 .

NO : There is an intermittent malfunction such as poor engaged connector(s) or open circuit (Refer to GROUP 00, How to Cope with Intermittent Malfunction P.00-5).

STEP 3. M.U.T.-III diagnosis code

⚠ CAUTION

To prevent damage to scan tool MB991958, always turn the ignition switch to the "LOCK" (OFF) position before connecting or disconnecting scan tool MB991958.

(1) Turn the ignition switch to the "ON" position.

(2) Check if the diagnosis code is set.

(3) Turn the ignition switch to the "LOOK'' (OFF) position.

Q: Is diagnosis code B1519 set?

YES : Go to Step 4.

NO : Go to Step 5.

STEP 4. Connector lock check: SRS-ECU connector C-118 (M.U.T.-III diagnosis code).

(1) Disconnect the negative battery terminal.

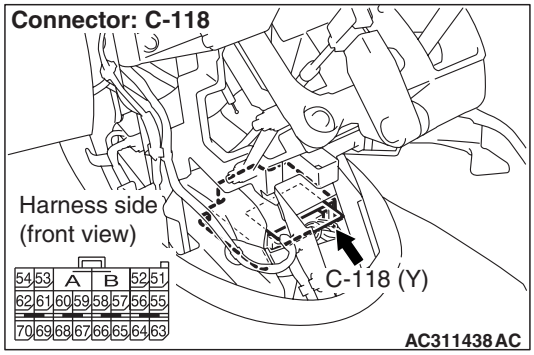

(2) Disconnect connectors C-118 and then reconnect them.

(3) Connect the negative battery terminal.

(4) Erase the diagnosis code memory, and check the diagnosis code.

Q: Is diagnosis code B1420 out put?

YES : Go to Step 5.

NO : The procedure is complete. It is assumed that diagnosis code B1420 set as connector C-118 was engaged improperly.

STEP 5. Connector lock check: SRS-ECU connector C-118 and side-airbag module (RH) connector D-29 (M.U.T.-III diagnosis code)

(1) Disconnect the negative battery terminal.

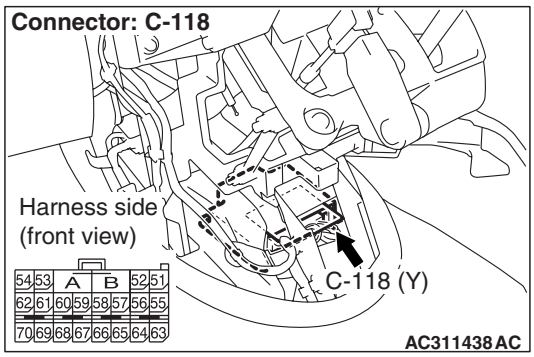

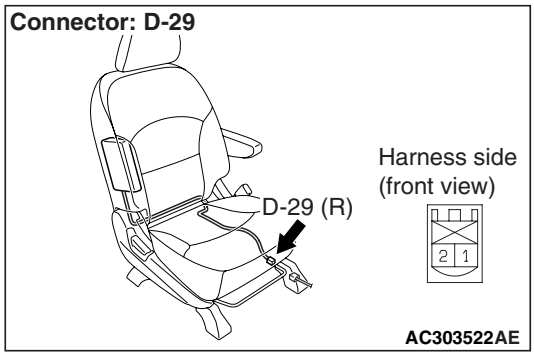

(2) Disconnect connectors C-118 and D-29, and then reconnect them.

(3) Connect the negative battery terminal.

(4) Erase the diagnosis code memory, and check the diagnosis code.

Q: Is diagnosis code B1420 out put?
YES : Go to Step 6.
NO : The procedure is complete. It is assumed that diagnosis code B1420 set because connector C-118 or D-29 was engaged improperly.

STEP 6. Check the side-airbag module (RH) (M.U.T.-III diagnosis code).

(1) Disconnect the negative battery terminal.

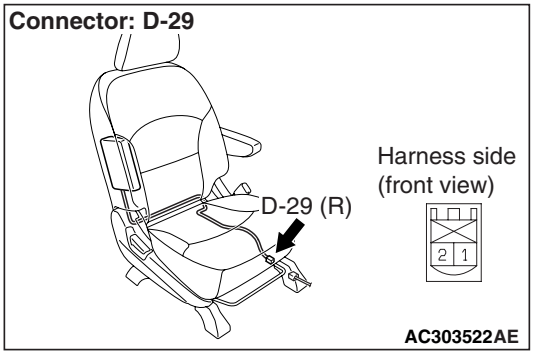

(2) Disconnect the side-airbag module (RH) connector D-29.

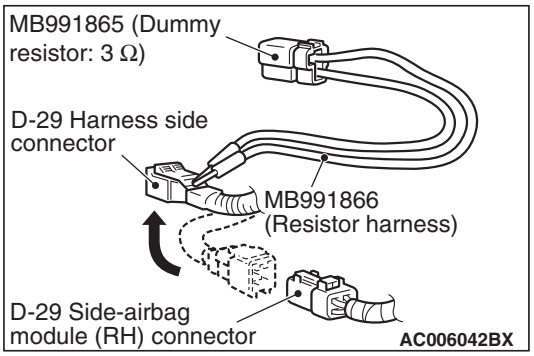

(3) Connect special tool dummy resistor (MB991865) to special tool resistor harness (MB991866).

⚠ CAUTION

Do not insert a test probe into the terminal from its front side directly, as the connector contact pressure may be weakened.

(4) Insert special tool MB991866 into the D-29 harness side connector by backprobing.
(5) Connect the negative battery terminal.
(6) Erase the diagnosis code memory, and check the diagnosis code.

Q: Is diagnosis code B1420 set?
YES : Go to Step 7.
NO : Replace the frame assembly of the front seat (RH) (Refer to GROUP 52A, Front Seat P.52A-23).

STEP 7. Check the side-airbag module (RH) circuit. Resistance measurement at the SRS-ECU connector C-118.

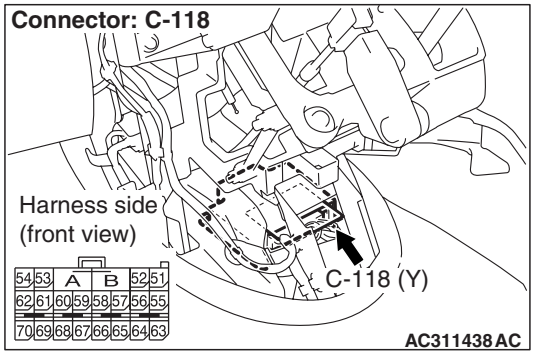

(1) Disconnect SRS-ECU connector C-118.

⚠ *DANGER*

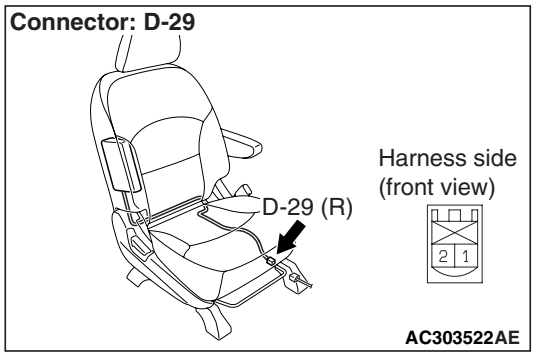

To prevent the air bag from deploying unintentionally, disconnect the side-airbag module (RH) connector D-29 to short the squib circuit.

(2) Disconnect side-airbag module connector D-29.

⚠ CAUTION

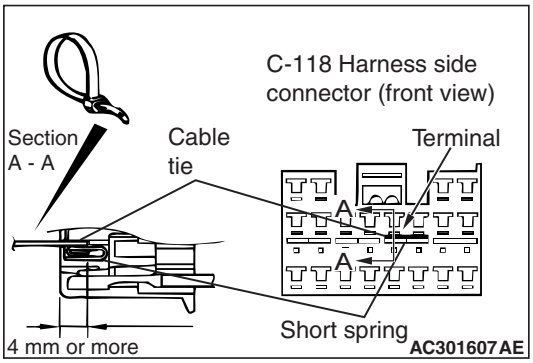

Insert an insulator such as a cable tie to a depth of 4mm or more, otherwise the short spring will not be released.

(3) Insert a cable tie [3 mm wide, 0.5 mm thick] between terminals 57, 58 and the short spring to release the short spring.

Main Index
Group TOC

(4) Measure at the wiring harness side.

⚠ CAUTION

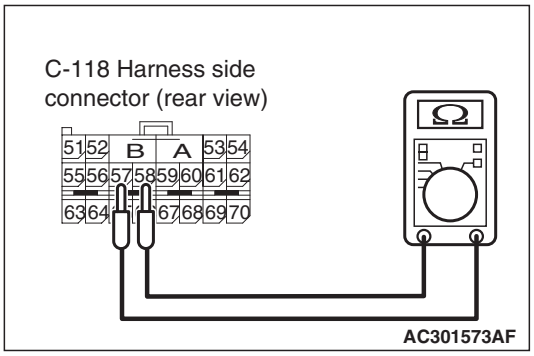

Do not insert a test probe into the terminal from its front side directly, as the connector contact pressure may be weakened.

(5) Check for continuity between C-118 harness side connector terminals 57 and 58.

OK: Open circuit

Q: Is the check result normal?

YES : Go to Step 8.

NO : Repair the harness wires between SRS-ECU connector C-118 (terminal No.57 and 58) and side-airbag module (RH) connector D-29 (terminal No.1 and 2).

STEP 8. Check whether the diagnosis code is reset.

Q: Is diagnosis code B1420 set?

YES : Replace the SRS-ECU (Refer to P.52B-332).

NO : An intermittent malfunction is suspected (Refer to GROUP 00, How to Use Troubleshooting/Inspection Service Points P.00-5).

Code No.B1421: Side-Airbag Module (RH) (Squib) System Fault 2 (Open in the Squib Circuit)

Side-Airbag Module (RH) (Squib) Circuit

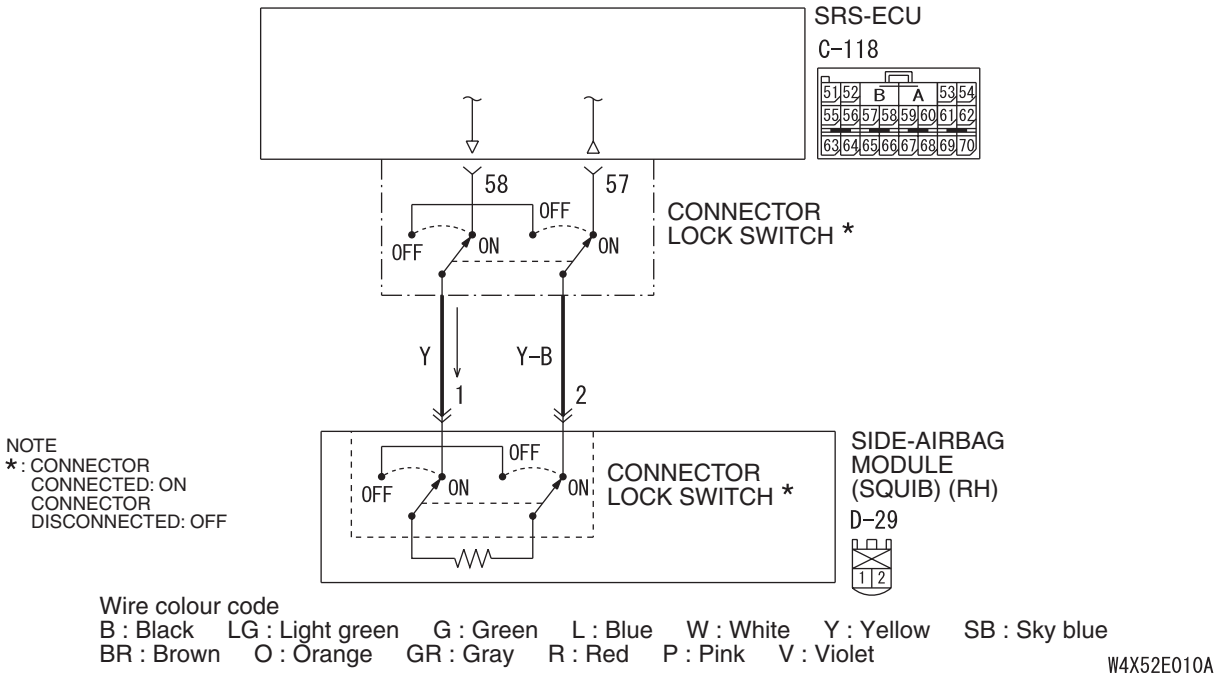

⚠ CAUTION

If diagnosis code B1421 is set in the SRS-ECU, always diagnose the CAN bus lines.

OPERATION

- The SRS-ECU judges how severe a collision is by detecting signals from the left and right side impact sensors. If the impact is over a predetermined level, the SRS-ECU sends an ignition signal. At this time, if the side-airbag safing G-sensor is on, the SRS side-airbag will inflate.
- The ignition signal is input to the side-airbag module to inflate the side-airbag.

DIAGNOSIS CODE SET CONDITIONS

This diagnosis code is set if there is abnormal resistance between the input terminals of the side-airbag module (RH) (squib).

PROBABLE CAUSES

- Open circuit in the side-airbag module (RH) (squib) circuit
- Improper connector contact
- Malfunction of the SRS-ECU

DIAGNOSIS PROCEDURE

STEP 1. M.U.T.-III CAN bus diagnostics

Use the M.U.T.-III to diagnose the CAN bus lines.

Q: Is the check result normal?

YES : Go to Step 2

NO : Repair the CAN bus lines (Refer to GROUP 54F, DiagnosisP.54F-13).

STEP 2. Check whether the diagnosis code is reset.

Check again if the diagnosis code is set.

(1) Erase the diagnosis code.

(2) Ignition: "LOCK" (OFF) position to "ON"

(3) On completion, check that the diagnosis code is not reset.

Q: Is the diagnosis code set?

YES : Go to Step 3 .

NO : There is an intermittent malfunction such as poor engaged connector(s) or open circuit (Refer to GROUP 00, How to Cope with Intermittent Malfunction P.00-5).

STEP 3. Check the side-airbag module (RH) (M.U.T.-III diagnosis code).

(1) Disconnect the negative battery terminal.

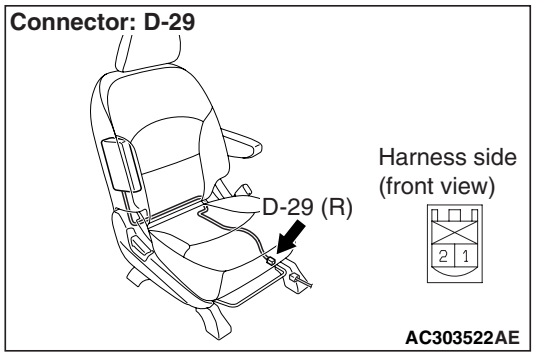

(2) Disconnect the side-airbag module (RH) connector D-29.

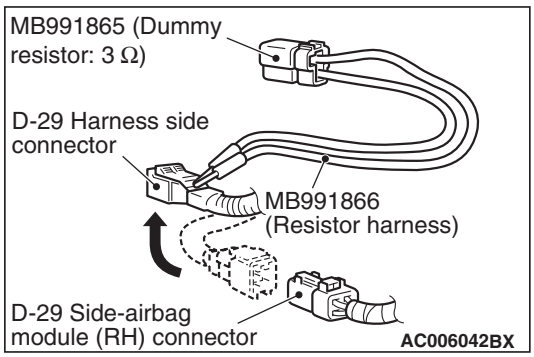

(3) Connect special tool dummy resistor (MB991865) to special tool resistor harness (MB991866).

⚠ CAUTION

Do not insert a test probe into the terminal from its front side directly, as the connector contact pressure may be weakened.

(4) Insert special tool MB991866 into the D-29 harness side connector by backprobing.

(5) Connect the negative battery terminal.

(6) Erase the diagnosis code memory, and check the diagnosis code.

Q: Is diagnosis code B1421 set?

YES : Go to Step 4.

NO : Replace the frame assembly of the front seat (RH) (Refer to GROUP 52A, Front Seat P.52A-23).

STEP 4. Resistance measurement between SRS-ECU connector C-118 (terminal No.57 and 58) and the side-airbag module (RH) connector D-29 (terminal No.2 and 1).

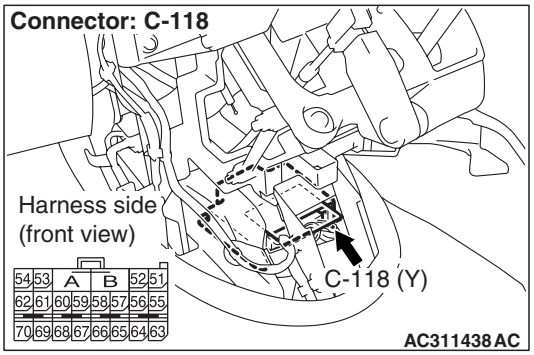

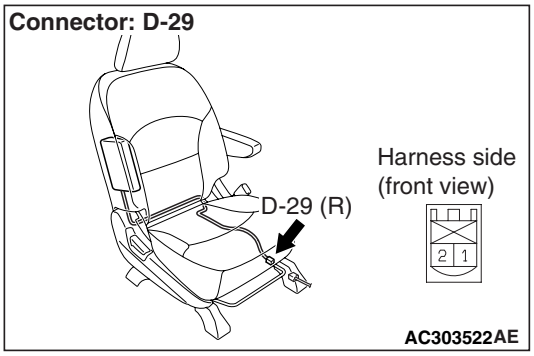

(1) Disconnect SRS-ECU connector C-118 and side-airbag module (RH) connector D-29.

⚠ CAUTION

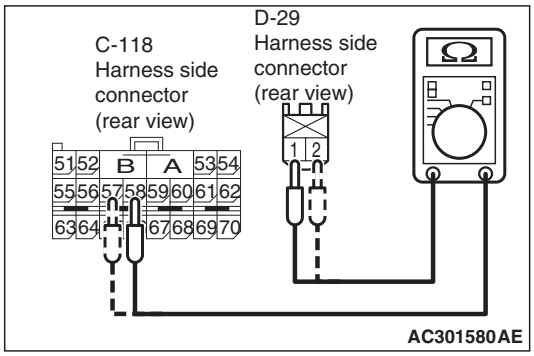

Do not insert a test probe into the terminal from its front side directly, as the connector contact pressure may be weakened.

(2) Check for continuity between the following terminals.
- SRS-ECU connector C-118 (terminal No.57) and the side-airbag module (RH) connector D-29 (terminal No.2)
- SRS-ECU connector C-118 (terminal No.58) and the side-airbag module (RH) connector D-29 (terminal No.1)

OK: Less than 2 Ω

Q: Are the check results normal?

YES : Go to Step 5.

NO : Repair the harness wires between SRS-ECU connector C-118 (terminal No.57 and 58) and side-airbag module (RH) connector D-29 (terminal No.2 and 1).

STEP 5. Check whether the diagnosis code is reset.

Q: Is diagnosis code B1421 set?

YES : Replace the SRS-ECU (Refer to P.52B-332).

NO : An intermittent malfunction is suspected (Refer to GROUP 00, How to Use Troubleshooting/Inspection Service Points P.00-5).

Main Index
Group TOC

Code No.B1422: Side-Airbag Module (RH) (Squib) System Fault Earth Circuit (Short-Circuited to Earth)

Side-Airbag Module (RH) (Squib) Circuit

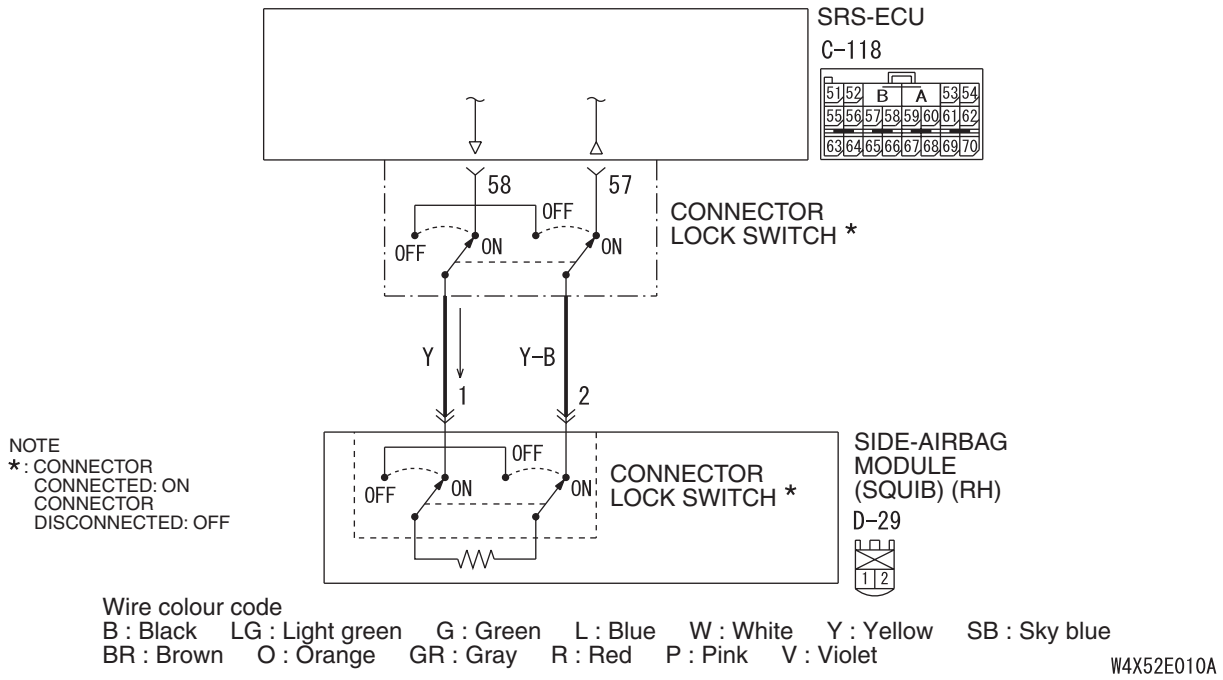

AC503873AB

⚠ CAUTION

If diagnosis code B1422 is set in the SRS-ECU, always diagnose the CAN bus lines.

OPERATION

- The SRS-ECU judges how severe a collision is by detecting signals from the left and right side impact sensors. If the impact is over a predetermined level, the SRS-ECU sends an ignition signal. At this time, if the side-airbag safing G-sensor is on, the SRS side-airbag will inflate.
- The ignition signal is input to the side-airbag module to inflate the side-airbag.

DIAGNOSIS CODE SET CONDITIONS

This diagnosis code is set if there is abnormal resistance between the input terminals of the side-airbag module (RH) (squib).

PROBABLE CAUSES

- Damaged wiring harnesses or connectors
- Short to ground in the side-airbag module (RH) (squib) harness
- Malfunction of the SRS-ECU

DIAGNOSIS PROCEDURE

STEP 1. M.U.T.-III CAN bus diagnostics

Use the M.U.T.-III to diagnose the CAN bus lines.

Q: Is the check result normal?

YES : Go to Step 2.

NO : Repair the CAN bus lines (Refer to GROUP 54F, Diagnosis-Can Bus Diagnostic Chart P.54F-13).

STEP 2. Check whether the diagnosis code is reset.

Check again if the diagnosis code is set.

(1) Erase the diagnosis code.
(2) Ignition: "LOCK" (OFF) position to "ON"
(3) On completion, check that the diagnosis code is not reset.

Q: Is the diagnosis code set?

YES : Go to Step 3 .

NO : There is an intermittent malfunction such as poor engaged connector(s) or open circuit (Refer to GROUP 00, How to Cope with Intermittent Malfunction P.00-5).

STEP 3. Check the side-airbag module (RH) (M.U.T.-III diagnosis code).

(1) Disconnect the negative battery terminal.

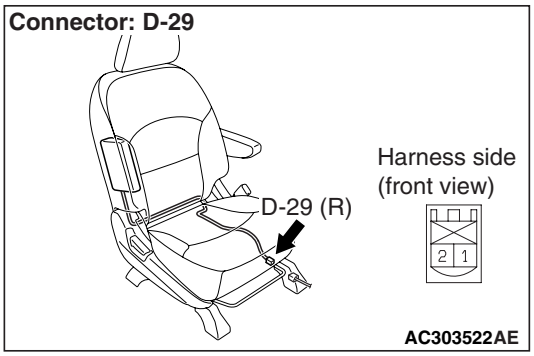

(2) Disconnect the side-airbag module (RH) connector D-29.

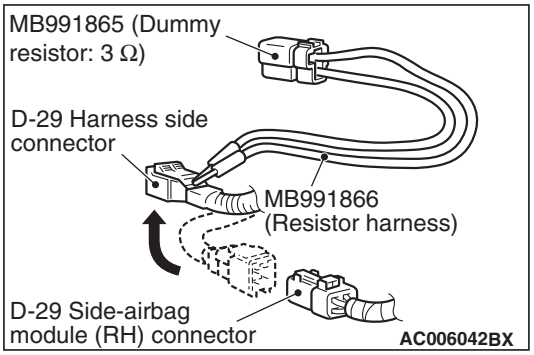

(3) Connect special tool dummy resistor (MB991865) to special tool resistor harness (MB991866).

⚠ CAUTION

Do not insert a test probe into the terminal from its front side directly, as the connector contact pressure may be weakened.

(4) Insert special tool MB991866 into the D-29 harness side connector by backprobing.
(5) Connect the negative battery terminal.
(6) Erase the diagnosis code memory, and check the diagnosis code.

Q: Is diagnosis code B1422 set?

YES : Go to Step 4.

NO : Replace the frame assembly of the front seat (RH) (Refer to GROUP 52A, Front Seat P.52A-23).

STEP 4. Check the side-airbag module (RH) circuit. Resistance measurement at the SRS-ECU connector C-118.

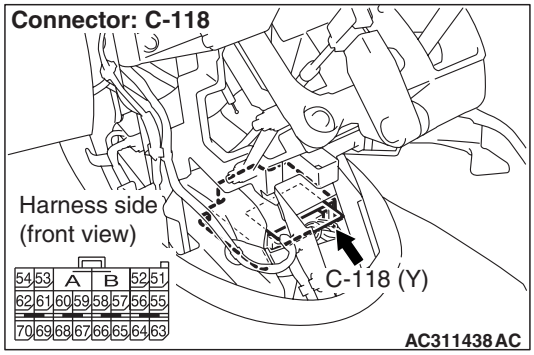

(1) Disconnect SRS-ECU connector C-118.

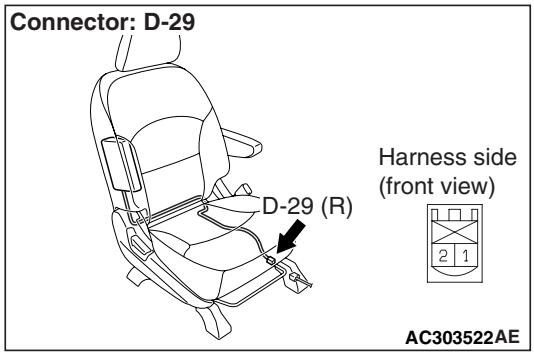

(2) Disconnect side-airbag module (RH) connector D-29.

⚠ CAUTION

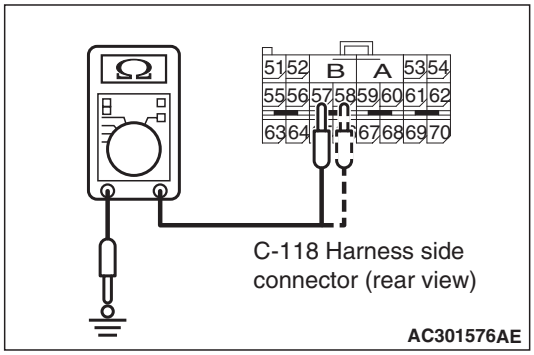

Do not insert a test probe into the terminal from its front side directly, as the connector contact pressure may be weakened.

(3) Check for continuity between C-118 harness side connector terminals 57, 58 and body earth.

OK: Open circuit

Q: Is the check result normal?

YES : Go to Step 5.

NO : Repair the harness wires between SRS-ECU connector C-118 (terminal No.57 and 58) and side-airbag module (RH) connector D-29 (terminal No.2 and 1).

Main Index
Group TOC

STEP 5. Check whether the diagnosis code is reset.

Q: Is diagnosis code B1422 set?

YES : . Replace the SRS-ECU (Refer to P.52B-332).

NO : . An intermittent malfunction is suspected (Refer to GROUP 00, How to Use Troubleshooting/Inspection Service Points P.00-5).

Code No.B1423: Side-Airbag Module (RH) (Squib) System Fault Power Supply Circuit (Short-Circuited to Power Supply)

Side-Airbag Module (RH) (Squib) Circuit

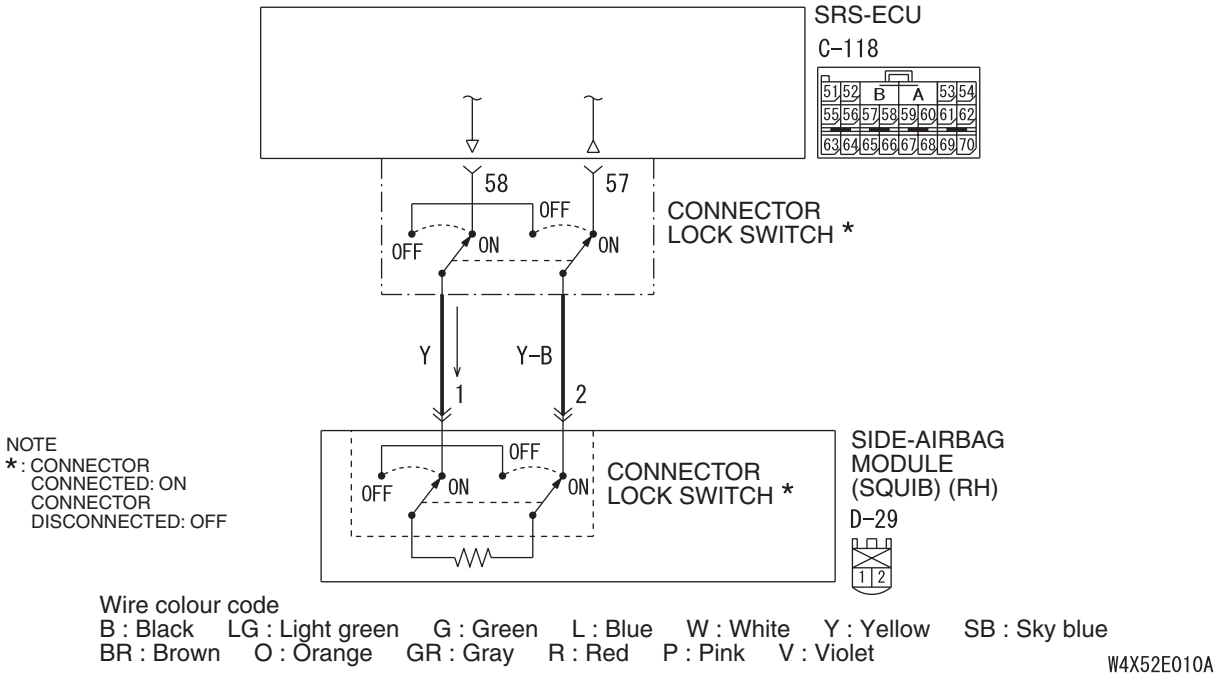

AC503873AB

⚠ CAUTION

If diagnosis code B1423 is set in the SRS-ECU, always diagnose the CAN bus lines.

OPERATION

- The SRS-ECU judges how severe a collision is by detecting signals from the left and right side impact sensors. If the impact is over a predetermined level, the SRS-ECU sends an ignition signal. At this time, if the side-airbag safing G-sensor is on, the SRS side-airbag will inflate.
- The ignition signal is input to the side-airbag module to inflate the side-airbag.

DIAGNOSIS CODE SET CONDITIONS

This diagnosis code is set if there is abnormal resistance between the input terminals of the side-airbag module (RH) (squib).

PROBABLE CAUSES

- Damaged wiring harnesses or connectors
- Short to the power supply in the side-airbag module (RH) (squib) harness
- Malfunction of the SRS-ECU

DIAGNOSIS PROCEDURE

STEP 1. M.U.T.-III CAN bus diagnostics

Use the M.U.T.-III to diagnose the CAN bus lines.

Q: Is the check result normal?

YES : Go to Step 2

NO : Repair the CAN bus lines (Refer to GROUP 54F, DiagnosisP.54F-13).

STEP 2. Recheck for diagnosis code.

Check again if the diagnosis code is set.

(1) Erase the diagnosis code.

(2) Ignition: "LOCK" (OFF) position to "ON"

(3) On completion, check that the diagnosis code is not reset.

Q: Is the diagnosis code set?

YES : Go to Step 3 .

NO : There is an intermittent malfunction such as poor engaged connector(s) or open circuit (Refer to GROUP 00, How to Cope with Intermittent Malfunction P.00-5).

STEP 3. Check the side-airbag module (RH) (M.U.T.-III diagnosis code).

(1) Disconnect the negative battery terminal.

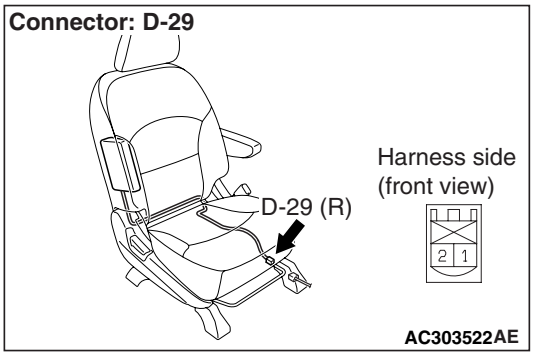

(2) Disconnect the side-airbag module (RH) connector D-29.

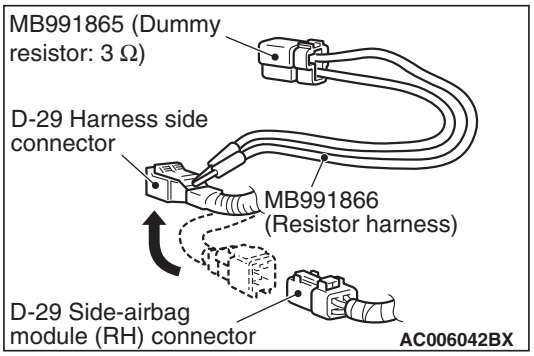

(3) Connect special tool dummy resistor (MB991865) to special tool resistor harness (MB991866).

⚠ CAUTION

Do not insert a test probe into the terminal from its front side directly, as the connector contact pressure may be weakened.

(4) Insert special tool MB991866 into the D-29 harness side connector by backprobing.

(5) Connect the negative battery terminal.

(6) Erase the diagnosis code memory, and check the diagnosis code.

Q: Is diagnosis code B1423 set?

YES : Go to Step 4.

NO : Replace the frame assembly of the front seat (RH) (Refer to GROUP 52A, Front Seat P.52A-23).

STEP 4. Check the side-airbag module (RH) circuit. Voltage measurement at the SRS-ECU connector C-118.

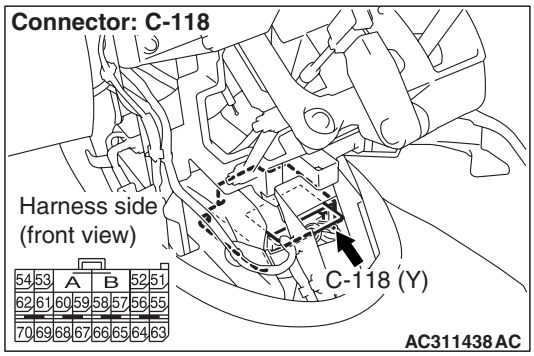

(1) Disconnect SRS-ECU connector C-118.

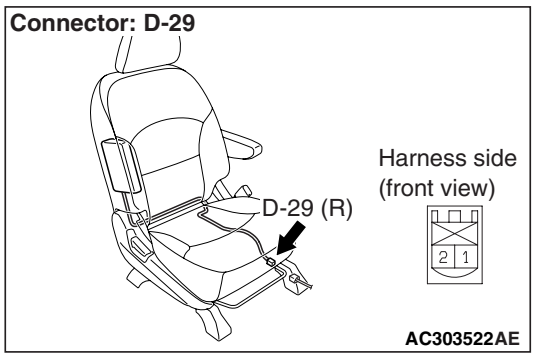

(2) Disconnect side-airbag module (RH) connector D-29.

(3) Turn the ignition switch to the "ON" position.

⚠ CAUTION

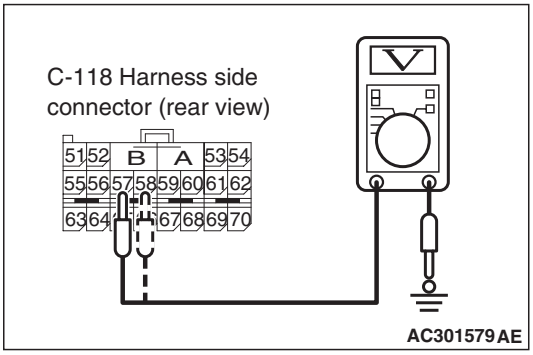

Do not insert a test probe into the terminal from its front side directly, as the connector contact pressure may be weakened.

(4) Measure the voltage between C-118 harness side connector terminals 57 and 58 and body earth.

OK: 0 V

Q: Is the check result normal?
YES : Go to Step 5.
NO : Repair the harness wires between SRS-ECU connector C-118 (terminal No.57 and 58) and side-airbag module (RH) connector D-29 (terminal No.2 and 1).

STEP 5. Check whether the diagnosis code is reset.

Q: Is diagnosis code B1423 set?
YES : Return to Step 1.
NO : The procedure is complete.

Code No.B1426: Side Impact Sensor (Front) (RH) System for Fault 1
Code No.B1436: Side Impact Sensor (Front) (LH) System for Fault 1

⚠ CAUTION
If diagnosis code B1426 or B1436 is set in the SRS-ECU, always diagnose the CAN main bus line.

DIAGNOSIS CODE SET CONDITIONS

These diagnosis codes are set if the following conditions are detected from the analogue G-sensor inside the side impact sensor output:

- Analogue G-sensor is not operating.
- Analogue G-sensor characteristics are abnormal.
- Analogue G-sensor output is abnormal.

PROBABLE CAUSES

Malfunction of side impact sensor (front) (RH) (for diagnosis code B1426) and side impact sensor (front) (LH) (for diagnosis code B1436)

DIAGNOSIS PROCEDURE

STEP 1. M.U.T.-III CAN bus diagnostics
Use the M.U.T.-III to diagnose the CAN bus lines.

Q: Is the check result normal?
YES : Go to Step 2.
NO : Repair the CAN bus line (Refer to GROUP 54F, Diagnosis P.54F-13).

STEP 2. Check whether the diagnosis code is reset.
Check again if the diagnosis code is set.
(1) Erase the diagnosis code.
(2) Ignition: "LOCK" (OFF) position to "ON"
(3) On completion, check that the diagnosis code is not reset.

Q: Is the diagnosis code set?
YES : Go to Step 3.
NO : There is an intermittent malfunction such as poor engaged connector(s) or open circuit (Refer to GROUP 00, How to Cope with Intermittent Malfunction P.00-5).

STEP 3. Check the side impact sensor (front) (M.U.T.-III diagnosis code).
Replace side impact sensor (front) (RH) (for diagnosis code B1426) and side impact sensor (front) (LH) (for diagnosis code B1436) (Refer to P.52B-347).
Check the diagnosis code.

Q: Is either diagnosis code B1426 or B1436 set?
YES : Replace the SRS-ECU (Refer to P.52B-332).
NO : The procedure is complete.

Main Index
Group TOC

Code No.B1427: Side Impact Sensor (Front) (RH) Power Supply Circuit System

Side Impact Sensor (Front) (RH) Circuit

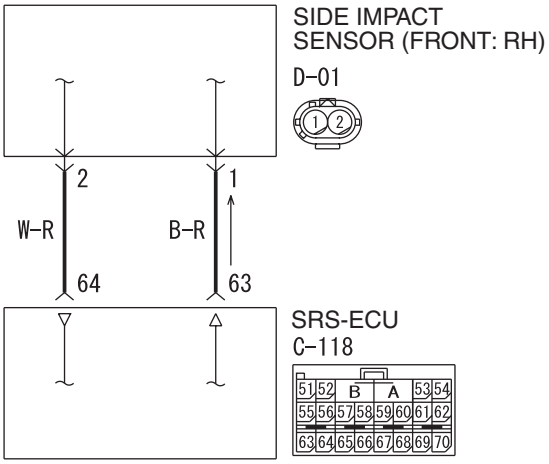

Wire colour code
B : Black LG : Light green G : Green L : Blue W : White Y : Yellow SB : Sky blue
BR : Brown O : Orange GR : Gray R : Red P : Pink V : Violet

W4X52X012A

⚠ CAUTION

If diagnosis code B1427 is set in the SRS-ECU, always diagnose the CAN main bus line.

OPERATION

The side impact sensor includes an analogue G-sensor and CPU, etc. The CPU monitors the analogue G-sensor output signal. If the CPU judges that the side-airbags and curtain air bags should be deployed, it sends a fire signal to the SRS-ECU to deploy the side-airbags and curtain air bags. In addition, the CPU diagnoses the internal components of the side impact sensor. If a malfunction occurs, it requests the SRS-ECU to set a diagnosis code.

DIAGNOSIS CODE SET CONDITIONS

This diagnosis code will set when the power supply voltage to the side impact sensor (front) (RH) remains less than a predetermined value for 5 seconds. However, if the system returns to normal condition, code number B1427 will be erased automatically and the SRS warning lamp will go out.

PROBABLE CAUSES

- Damaged wiring harness or connectors
- Malfunction of the side impact sensor (front) (RH)
- Malfunction of the SRS-ECU

DIAGNOSIS PROCEDURE

STEP 1. M.U.T.-III CAN bus diagnostics

Use the M.U.T.-III to diagnose the CAN bus lines.

Q: Is the check result normal?

YES : Go to Step 2.

NO : Repair the CAN bus line (Refer to GROUP 54F, Diagnosis P.54F-13).

STEP 2. Check whether the diagnosis code is reset.

Check again if the diagnosis code is set.

(1) Erase the diagnosis code.
(2) Ignition: "LOCK" (OFF) position to "ON"
(3) On completion, check that the diagnosis code is not reset.

Q: Is the diagnosis code set?

YES : Go to Step 3.

NO : There is an intermittent malfunction such as poor engaged connector(s) or open circuit (Refer to GROUP 00, How to Cope with Intermittent Malfunction P.00-5).

Main Index
Group TOC

STEP 3. Check the harness wires for open circuit or short circuit between SRS-ECU connector C-118 (terminal No.63 and 64) and side impact sensor (front) (RH) connector D-01 (terminal No.1 and 2).

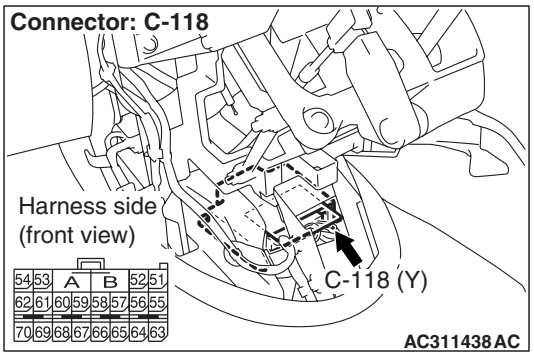

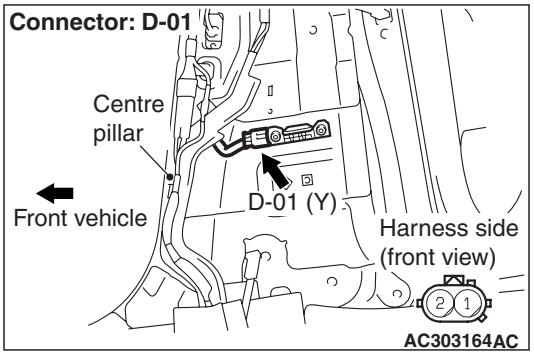

Q: Are the harness wires between SRS-ECU connector C-118 (terminal No.63 and 64) and side impact sensor (front) (RH) connector D-01 (terminal No.1 and 2) in good condition?

YES : Go to Step 4.

NO : Replace the harness wires between SRS-ECU connector C-118 (terminal No.63 and 64) and side impact sensor (front) (RH) connector D-01 (terminal No.1 and 2).

STEP 4. Check the side impact sensor (front) (RH) (M.U.T.-III diagnosis code).

(1) Disconnect the negative battery terminal.
(2) Replace the side impact sensor (front) (RH) with the side impact sensor (front) (LH).
(3) Connect the negative battery terminal.
(4) Erase diagnosis code from memory, and check the diagnosis code.

Q: Is diagnosis code B1427 set?

YES : Replace the SRS-ECU (Refer to P.52B-332).

NO : Replace the side impact sensor (front) (RH) with a new one (Refer to P.52B-347). Go to Step 5.

STEP 5. Check whether the diagnosis code is reset.

Q: Is diagnosis code B1427 set?

YES : Replace the SRS-ECU (Refer to P.52B-332).

NO : An intermittent malfunction is suspected (Refer to GROUP 00, How to Use Troubleshooting/Inspection Service Points P.00-5).

Main Index
Group TOC

Code No.B1428: Side Impact Sensor (Front) (RH) (Squib) for Power Supply Circuit
Code No.B1429: Side Impact Sensor (Front) (RH) (Squib) for Communication System

Side Impact Sensor (Front) (RH) Circuit

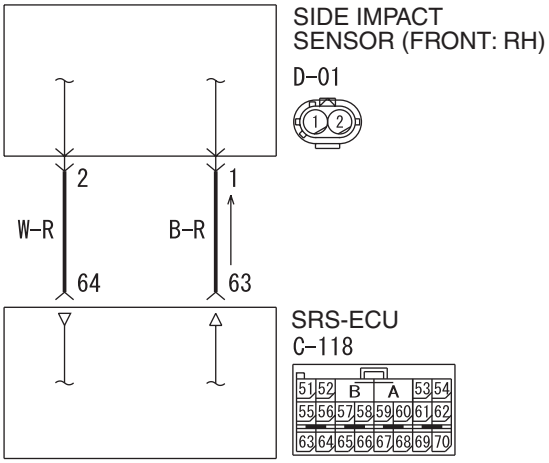

Wire colour code
B : Black LG : Light green G : Green L : Blue W : White Y : Yellow SB : Sky blue
BR : Brown O : Orange GR : Gray R : Red P : Pink V : Violet

W4X52X012A

⚠ CAUTION

If diagnosis code B1428 or B1429 is set in the SRS-ECU, always diagnose the CAN main bus line.

OPERATION

The side impact sensor includes an analogue G-sensor and CPU, etc. The CPU monitors the analogue G-sensor output signal. If the CPU judges that the side-airbags and curtain air bags should be deployed, it sends a fire signal to the SRS-ECU to deploy the side-airbags and curtain air bags. In addition, the CPU diagnoses the internal components of the side impact sensor. If a malfunction occurs, it requests the SRS-ECU to set a diagnosis code.

DIAGNOSIS CODE SET CONDITIONS

These diagnosis codes are set if communication between the side impact sensor (front) (RH) and the SRS-ECU is not possible or communication is faulty.

PROBABLE CAUSES

- Damaged wiring harnesses or connectors
- Malfunction of the side impact sensor (front) (RH)
- Malfunction of the SRS-ECU

DIAGNOSIS PROCEDURE

STEP 1. M.U.T.-III CAN bus diagnostics

Use the M.U.T.-III to diagnose the CAN bus lines.

Q: Is the check result normal?

YES : Go to Step 2.

NO : Repair the CAN bus line (Refer to GROUP 54F, Diagnosis P.54F-13).

STEP 2. Check whether the diagnosis code is reset.

Check again if the diagnosis code is set.

(1) Erase the diagnosis code.
(2) Ignition: "LOCK" (OFF) position to "ON"
(3) On completion, check that the diagnosis code is not reset.

Q: Is the diagnosis code set?

YES : Go to Step 3.

NO : There is an intermittent malfunction such as poor engaged connector(s) or open circuit (Refer to GROUP 00, How to Cope with Intermittent Malfunction P.00-5).

Main Index
Group TOC

STEP 3.Check the side impact sensor (front) (RH) (M.U.T.-III diagnosis code).

(1) Disconnect the negative battery terminal.
(2) Replace the side impact sensor (front) (RH) with the side impact sensor (front) (LH).
(3) Connect the negative battery terminal.
(4) Erase diagnosis code memory, and check the diagnosis code.

Q: Is diagnosis code B1438 or B1439 set?

YES : Replace the side impact sensor (front) (RH) with a new one (Refer to P.52B-347). Then go to Step 5.

NO : Go to Step 4.

STEP 4. Check the harness wires for open circuit or short circuit between SRS-ECU connector C-118 (terminal No.63 and 64) and side impact sensor (front) (RH) connector D-01 (terminal No.1 and 2).

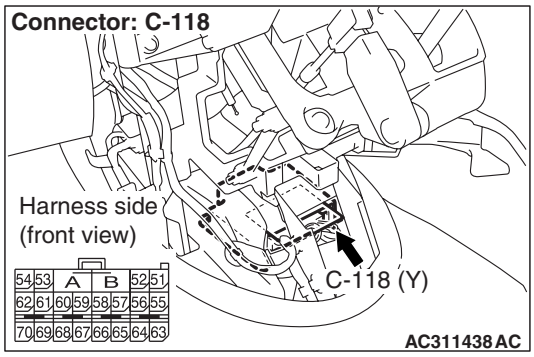

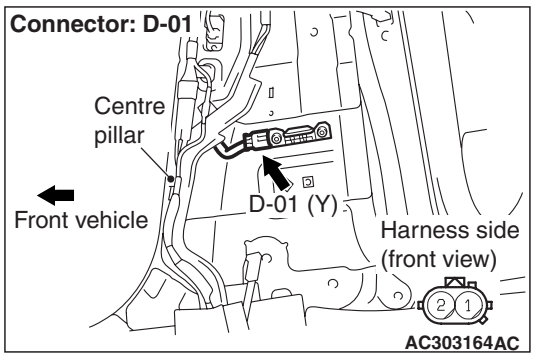

Q: Is the check result normal?

YES : Go to Step 5.

NO : Repair the harness wires between SRS-ECU connector C-118 (terminal No.63 and 64) and side impact sensor (front) (RH) connector D-01 (terminal No.1 and 2).

STEP 5. Check whether the diagnosis code is reset.

Q: Is diagnosis code B1428 or B1429 set?

YES : Replace the SRS-ECU (Refer to P.52B-332).

NO : An intermittent malfunction is suspected (Refer to GROUP 00, How to Use Troubleshooting/Inspection Service Points P.00-5).

Main Index
Group TOC

Code No.B1430: Side-Airbag Module (LH) (Squib) System Fault 1 (Short Circuit between Terminals of the Squib Circuit)

Side-Airbag Module (Squib) (LH) Circuit

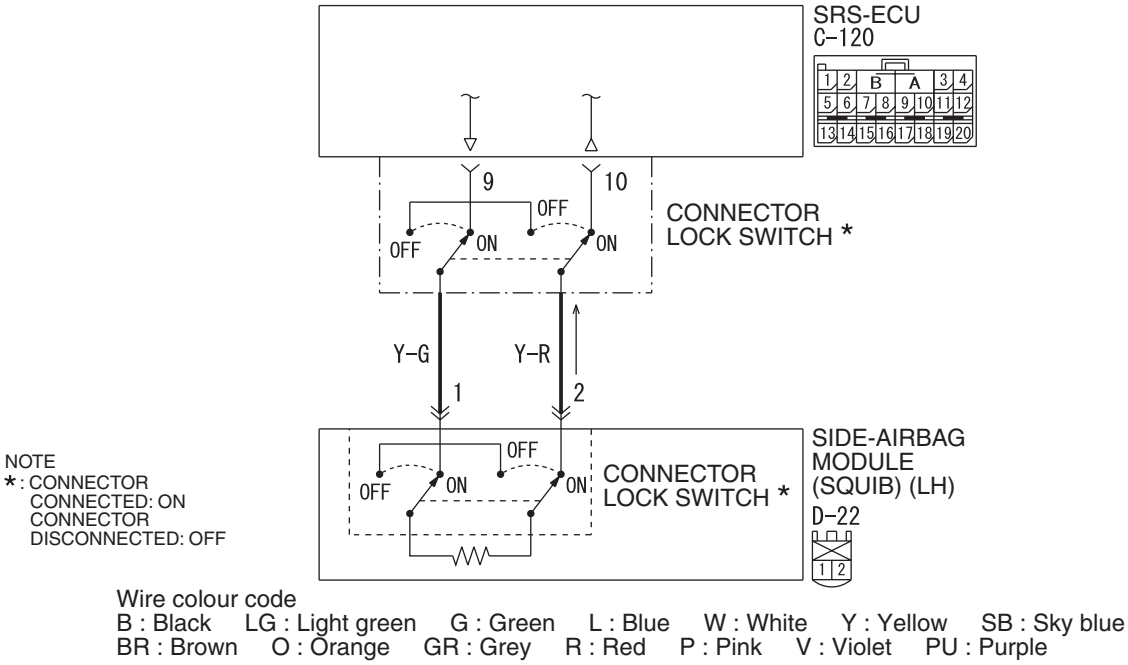

W6X52X003A

⚠ CAUTION

If diagnosis code B1430 is set in the SRS-ECU, always diagnose the CAN bus lines.

OPERATION

- The SRS-ECU judges how severe a collision is by detecting signals from the left and right side impact sensors. If the impact is over a predetermined level, the SRS-ECU sends an ignition signal. At this time, if the side-airbag safing G-sensor is on, the SRS side-airbag will inflate.
- The ignition signal is input to the side-airbag module to inflate the side-airbag.

DIAGNOSIS CODE SET CONDITIONS

This diagnosis code is set if there is abnormal resistance between the input terminals of the side-airbag module (LH) (squib).

PROBABLE CAUSES

- Improper engaged connector or defective short spring*
- Short circuit between the side-airbag module (LH) (squib) circuit terminals
- Damaged connector(s)
- Malfunction of the SRS-ECU

*NOTE: *: The squib circuit connectors integrate a "short" spring (which prevents the air bag from deploying unintentionally due to static electricity by shorting the positive wire to the ground wire in the squib circuit when the connectors are disconnected). (Refer to P.52B-3). Therefore, if connector C-120 or D-22 is damaged or improperly engaged, the short spring may not be released when the connector is connected.*

DIAGNOSIS PROCEDURE

STEP 1. M.U.T.-III CAN bus diagnostics

Use the M.U.T.-III to diagnose the CAN bus lines.

Q: Is the check result normal?

YES : Go to Step 2

NO : Repair the CAN bus lines (Refer to GROUP 54F, Diagnosis P.54F-13).

Main Index
Group TOC

STEP 2. Check whether the diagnosis code is reset.

Check again if the diagnosis code is set.
(1) Erase the diagnosis code.
(2) Ignition: "LOCK" (OFF) position to "ON"
(3) On completion, check that the diagnosis code is not reset.

Q: Is the diagnosis code set?
YES : Go to Step 3.
NO : There is an intermittent malfunction such as poor engaged connector(s) or open circuit (Refer to GROUP 00, How to Cope with Intermittent Malfunction P.00-5).

STEP 3. M.U.T.-III diagnosis code

⚠ CAUTION
To prevent damage to scan tool MB991958, always turn the ignition switch to the "LOCK" (OFF) position before connecting or disconnecting scan tool MB991958.

(1) Turn the ignition switch to the "ON" position.
(2) Check if the diagnosis code is set.
(3) Turn the ignition switch to the "LOOK (OFF)" position.

Q: Is diagnosis code B1519 set?
YES : Go to Step 4 .
NO : Go to Step 5 .

STEP 4. Connector lock check: SRS-ECU connector C-140 (M.U.T.-III diagnosis code).

(1) Disconnect the negative battery terminal.

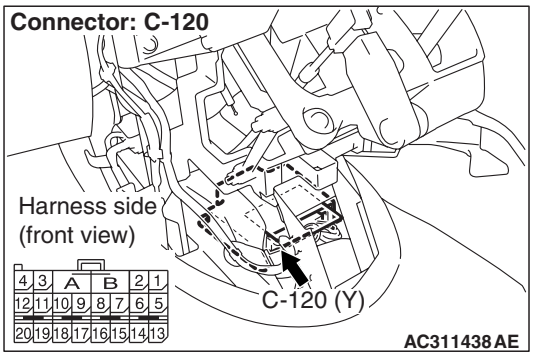

(2) Disconnect connectors C-120 and then reconnect them.
(3) Connect the negative battery terminal.
(4) Erase the diagnosis code memory, and check the diagnosis code.

Q: Is diagnosis code B1430 out put?
YES : Go to Step 5 .
NO : The procedure is complete. It is assumed that diagnosis code B1430 set as connector C-120 was engaged improperly.

STEP 5. Connector lock check: SRS-ECU connector C-120 and side-airbag module (LH) connector D-22 (M.U.T.-III diagnosis code)

(1) Disconnect the negative battery terminal.

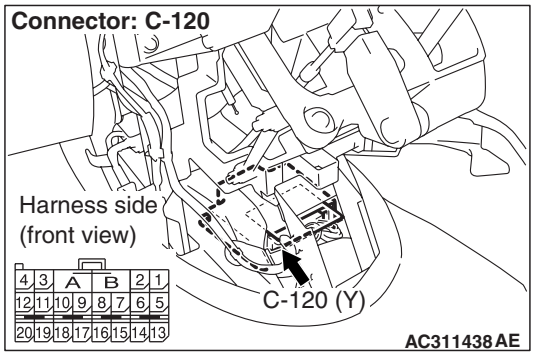

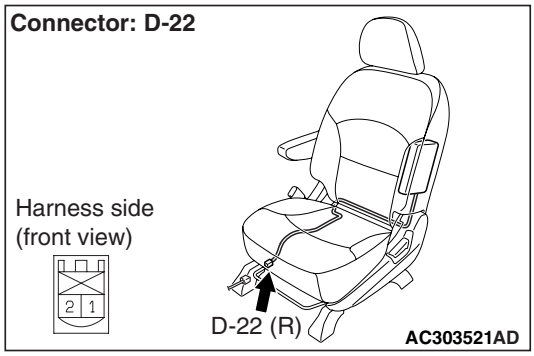

(2) Disconnect connectors C-120 and D-22 and then reconnect them.
(3) Connect the negative battery terminal.
(4) Erase the diagnosis code memory, and check the diagnosis code.

Q: Is diagnosis code B1430 out put?
YES : Go to Step 6 .
NO : The procedure is complete. It is assumed that diagnosis code B1430 set because connector C-120 or D-22 was engaged improperly.

STEP 6. Check the side-airbag module (LH) (M.U.T.-III diagnosis code).

(1) Disconnect the negative battery terminal.

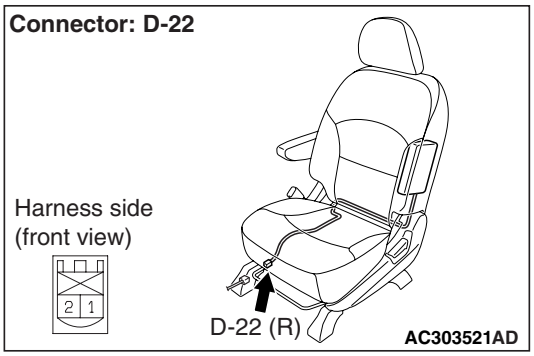

(2) Disconnect the side-airbag module (LH) connector D-22.

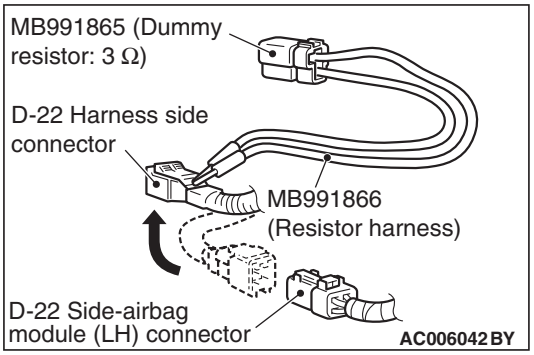

(3) Connect special tool dummy resistor (MB991865) to special tool resistor harness (MB991866).

⚠ CAUTION

Do not insert a test probe into the terminal from its front side directly, as the connector contact pressure may be weakened.

(4) Insert special tool MB991866 into the D-22 harness side connector by backprobing.
(5) Connect the negative battery terminal.
(6) Erase diagnosis code memory, and check the diagnosis code.

Q: Is diagnosis code B1430 set?

YES : Go to Step 7 .

NO : Replace the frame assembly of the front seat (LH) (Refer to GROUP 52A, Front Seat P.52A-23).

STEP 7. Check the side-airbag module (LH) circuit. Resistance measurement at the SRS-ECU connector C-120.

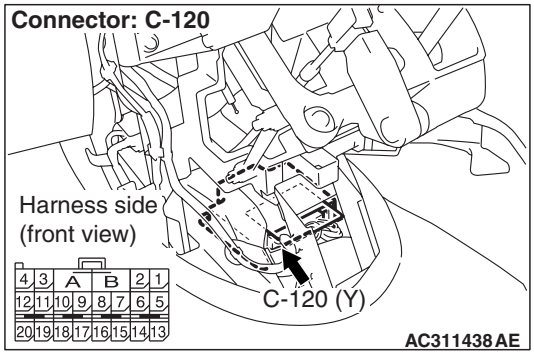

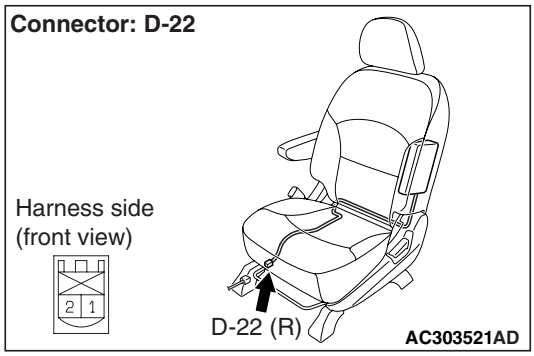

(1) Disconnect SRS-ECU connector C-120.

⚠ *DANGER*

To prevent the air bag from deploying unintentionally, disconnect the side-airbag module (LH) connector D-22 to short the squib circuit.

(2) Disconnect left hand side-airbag module (LH) connector D-22.

⚠ CAUTION

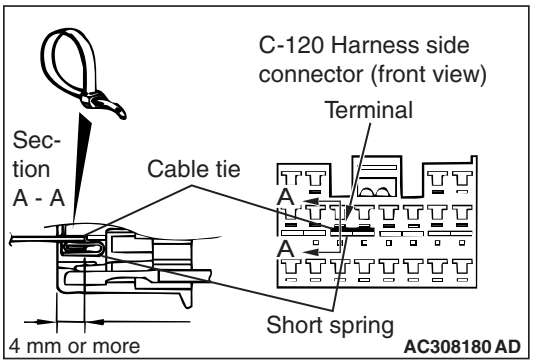

Insert an insulator such as a cable tie to a depth of 4mm or more, otherwise the short spring will not be released.

Main Index
Group TOC

(3) Insert a cable tie [3 mm wide, 0.5 mm thick] between terminals 9, 10 and the short spring to release the short spring.

⚠ CAUTION

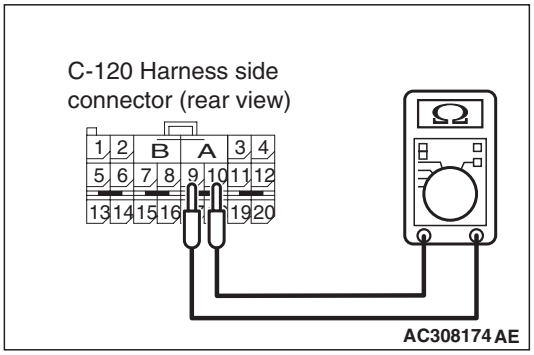

Do not insert a test probe into the terminal from its front side directly, as the connector contact pressure may be weakened.

(4) Check for continuity between C-120 harness side connector terminals 9 and 10.

OK: Open circuit

Q: Is the check result normal?

YES : Go to Step 8 .

NO : Repair the harness wires between SRS-ECU connector C-120 (terminal No.9 and 10) and side-airbag module (LH) connector D-22 (terminal No.1 and 2).

STEP 8. Check whether the diagnosis code is reset.

Q: Is diagnosis code B1430 set?

YES : Replace the SRS-ECU (Refer to P.52B-332).

NO : An intermittent malfunction is suspected (Refer to GROUP 00, How to Use Troubleshooting/Inspection Service Points P.00-5).

Code No.B1431: Side-Airbag Module (LH) (Squib) System Fault 2 (Open in the Squib Circuit)

Side-Airbag Module (Squib) (LH) Circuit

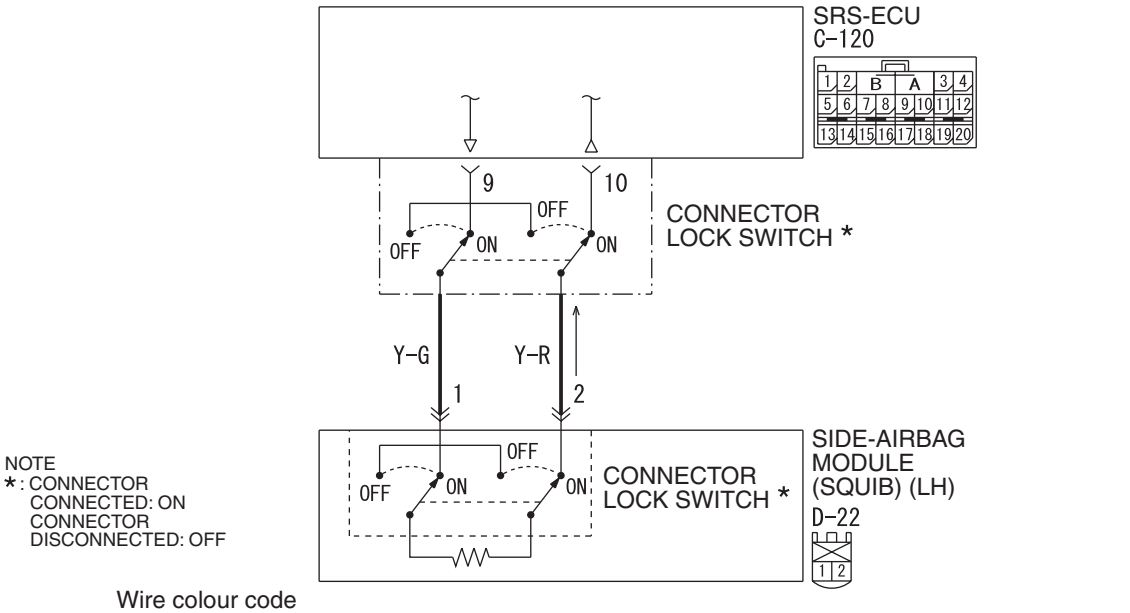

Wire colour code
B : Black LG : Light green G : Green L : Blue W : White Y : Yellow SB : Sky blue
BR : Brown O : Orange GR : Grey R : Red P : Pink V : Violet PU : Purple

W6X52X003A

⚠ CAUTION

If diagnosis code B1431 is set in the SRS-ECU, always diagnose the CAN bus lines.

OPERATION

- The SRS-ECU judges how severe a collision is by detecting signals from the left and right side impact sensors. If the impact is over a predetermined level, the SRS-ECU sends an ignition signal. At this time, if the side-airbag safing G-sensor is on, the SRS side-airbag will inflate.
- The ignition signal is input to the side-airbag module to inflate the side-airbag.

DIAGNOSIS CODE SET CONDITIONS

This diagnosis code is set if there is abnormal resistance between the input terminals of the side-airbag module (LH) (squib).

PROBABLE CAUSES

- Open circuit in the side-airbag module (squib) (LH) circuit
- Improper connector contact
- Malfunction of the SRS-ECU

DIAGNOSIS PROCEDURE

STEP 1. M.U.T.-III CAN bus diagnostics

Use the M.U.T.-III to diagnose the CAN bus lines.

Q: Is the check result normal?

YES : Go to Step 2 .

NO : Repair the CAN bus lines (Refer to GROUP 54F, Diagnosis P.54F-13).

STEP 2. Check whether the diagnosis code is reset.

Check again if the diagnosis code is set.

(1) Erase the diagnosis code.
(2) Ignition: "LOCK" (OFF) position to "ON"
(3) On completion, check that the diagnosis code is not reset.

Q: Is the diagnosis code set?

YES : Go to Step 3 .

NO : There is an intermittent malfunction such as poor engaged connector(s) or open circuit (Refer to GROUP 00, How to Cope with Intermittent Malfunction P.00-5).

STEP 3. Check the side-airbag module (LH) (M.U.T.-III diagnosis code).

(1) Disconnect the negative battery terminal.

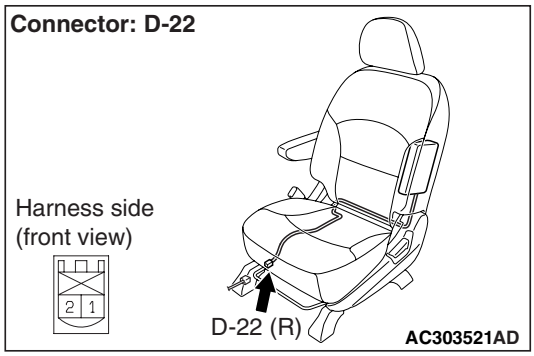

(2) Disconnect the side-airbag module (LH) connector D-22.

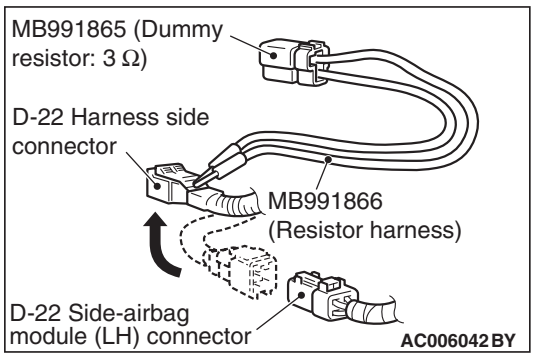

(3) Connect special tool dummy resistor (MB991865) to special tool resistor harness (MB991866).

⚠ CAUTION

Do not insert a test probe into the terminal from its front side directly, as the connector contact pressure may be weakened.

(4) Insert special tool MB991866 into the D-22 harness side connector by backprobing.
(5) Connect the negative battery terminal.
(6) Erase diagnosis code memory, and then check the diagnosis code.

Q: Is diagnosis code B1431 set?

YES : Go to Step 4 .

NO : Replace the frame assembly of the front seat (LH) (Refer to GROUP 52A, Front Seat P.52A-23).

STEP 4. Resistance measurement between the SRS-ECU connector C-120 (terminal No.9 and 10) and the side-airbag module (LH) connector D-22 (terminal No.1 and 2).

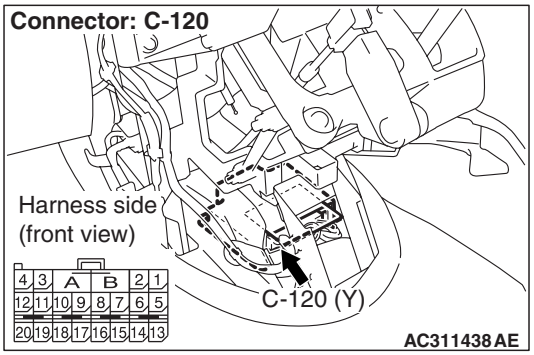

(1) Disconnect SRS-ECU connector C-120.

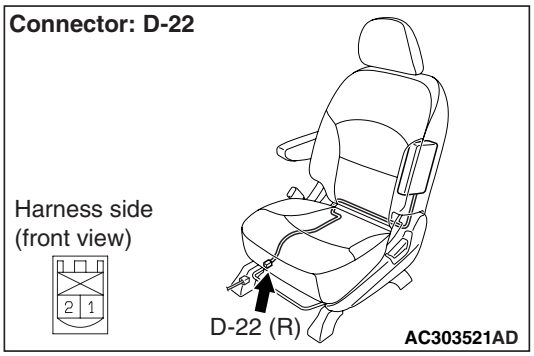

(2) Disconnect side-airbag module (LH) connector D-22.

⚠ CAUTION

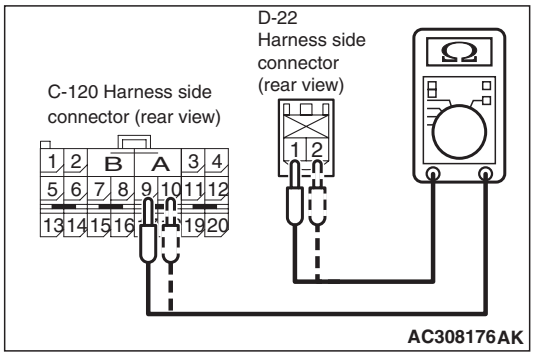

Do not insert a test probe into the terminal from its front side directly, as the connector contact pressure may be weakened.

(3) Check for continuity between the following terminals.
- SRS-ECU connector C-120 (terminal No.9) and the side-airbag module (LH) connector D-22 (terminal No.1)
- SRS-ECU connector C-120 (terminal No.10) and the side-airbag module (LH) connector D-22 (terminal No.2)

OK: Less than 2 Ω

Q: Are the check results normal?

YES : Go to Step 5 .

NO : Repair the harness wires between SRS-ECU connector C-120 (terminal No.9 and 10) and side-airbag module (LH) connector D-22 (terminal No.1 and 2).

STEP 5.Check whether the diagnosis code is reset.

Q: Is diagnosis code B1431 set?

YES : Replace the SRS-ECU (Refer to P.52B-332).

NO : An intermittent malfunction is suspected (Refer to GROUP 00, How to Use Troubleshooting/Inspection Service Points P.00-5).

Main Index
Group TOC

Code No.B1432: Side-Airbag Module (LH) (Squib) System Fault Earth Circuit (Short-Circuited to Earth)

Side-Airbag Module (Squib) (LH) Circuit

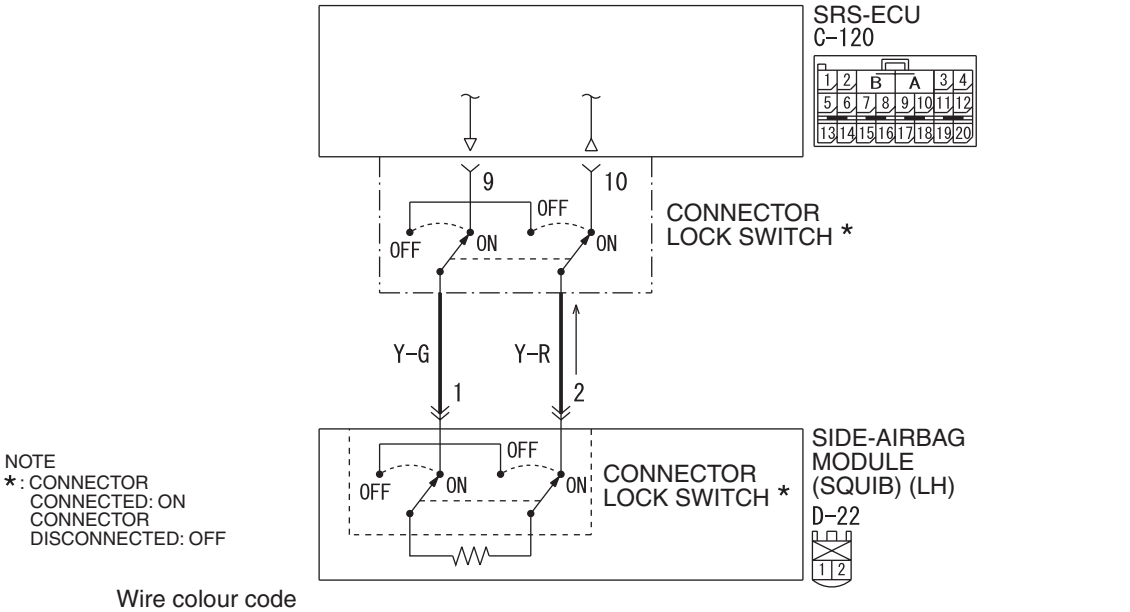

Wire colour code
B : Black LG : Light green G : Green L : Blue W : White Y : Yellow SB : Sky blue
BR : Brown O : Orange GR : Grey R : Red P : Pink V : Violet PU : Purple

W6X52X003A

⚠ CAUTION

If diagnosis code B1432 is set in the SRS-ECU, always diagnose the CAN bus lines.

OPERATION

- The SRS-ECU judges how severe a collision is by detecting signals from the left and right side impact sensors. If the impact is over a predetermined level, the SRS-ECU sends an ignition signal. At this time, if the side-airbag safing G-sensor is on, the SRS side-airbag will inflate.
- The ignition signal is input to the side-airbag module to inflate the side-airbag.

DIAGNOSIS CODE SET CONDITIONS

This DTC is set if there is abnormal resistance between the input terminals of the side-airbag module (LH) (squib).

PROBABLE CAUSES

- Damaged wiring harnesses or connectors
- Short to ground in the left hand side-airbag module (squib) harness
- Malfunction of the SRS-ECU

DIAGNOSIS PROCEDURE

STEP 1. M.U.T.-III CAN bus diagnostics

Use the M.U.T.-III to diagnose the CAN bus lines.

Q: Is the check result normal?

YES : Go to Step 2 .

NO : Repair the CAN bus lines (Refer to GROUP 54F, Diagnosis P.54F-13).

STEP 2. Check whether the diagnosis code is reset.

Check again if the diagnosis code is set.

(1) Erase the diagnosis code.
(2) Ignition: "LOCK" (OFF) position to "ON"
(3) On completion, check that the diagnosis code is not reset.

Q: Is the diagnosis code set?

YES : Go to Step 3 .

NO : There is an intermittent malfunction such as poor engaged connector(s) or open circuit (Refer to GROUP 00, How to Cope with Intermittent Malfunction P.00-5).

STEP 3. Check the side-airbag module (LH) (M.U.T.-III diagnosis code).

(1) Disconnect the negative battery terminal.

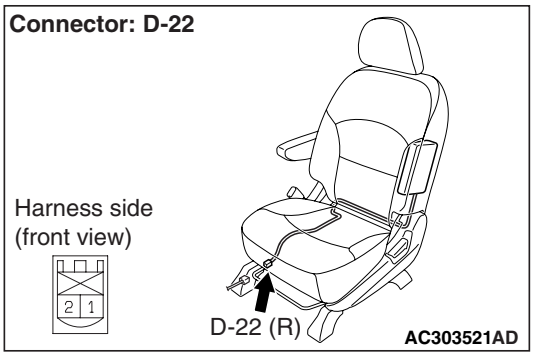

(2) Disconnect the side-airbag module (LH) connector D-22.

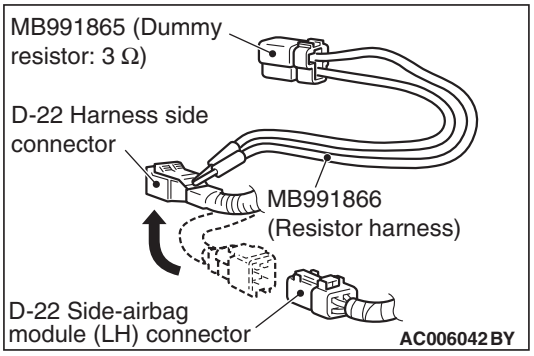

(3) Connect special tool dummy resistor (MB991865) to special tool resistor harness (MB991866).

⚠ CAUTION

Do not insert a test probe into the terminal from its front side directly, as the connector contact pressure may be weakened.

(4) Insert special tool MB991866 into the D-22 harness side connector by backprobing.
(5) Connect the negative battery terminal.
(6) Erase the diagnosis code memory, and check the diagnosis code.

Q: Is diagnosis code B1432 set?

YES : Go to Step 4 .

NO : Replace the frame assembly of the front seat (LH) (Refer to GROUP 52A, Front Seat P.52A-23).

STEP 4. Check the side-airbag module (LH) circuit. Resistance measurement at the SRS-ECU connector C-120.

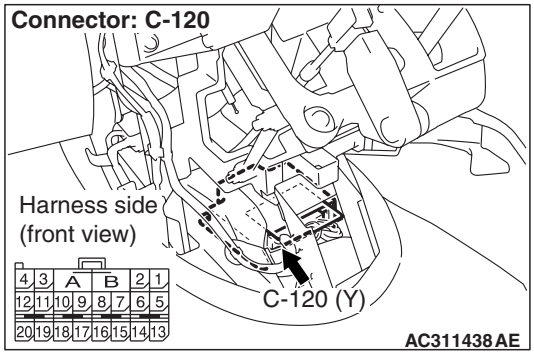

(1) Disconnect SRS-ECU connector C-120.

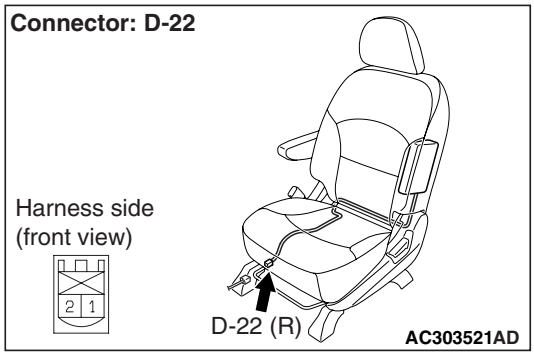

(2) Disconnect side-airbag module (LH) connector D-22

⚠ CAUTION

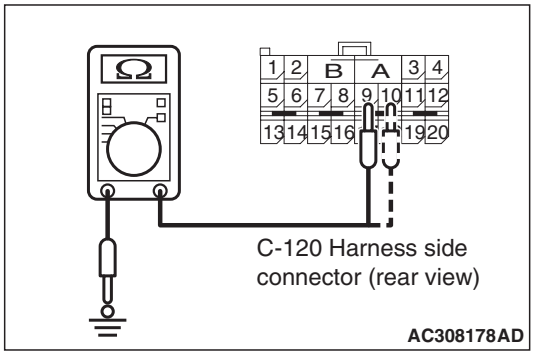

Do not insert a test probe into the terminal from its front side directly, as the connector contact pressure may be weakened.

(3) Check for continuity between C-120 harness side connector terminals 9, 10 and body earth.

OK: Open circuit

Q: Is the check result normal?

YES : Go to Step 5 .

NO : Repair the harness wires between SRS-ECU connector C-120 (terminal No.9 and 10) and side-airbag module (LH) connector D-22 (terminal No.1 and 2).

Main Index
Group TOC

STEP 5. Check whether the diagnosis code is reset.

Q: Is diagnosis code B1432 set?

YES : Replace the SRS-ECU (Refer to P.52B-332).

NO : . An intermittent malfunction is suspected (Refer to GROUP 00, How to Use Troubleshooting/Inspection Service Points P.00-5).

Code No.B1433: Side-Airbag Module (LH) (Squib) System Fault Power Supply Circuit (Short-Circuited to Power Supply)

Side-Airbag Module (Squib) (LH) Circuit

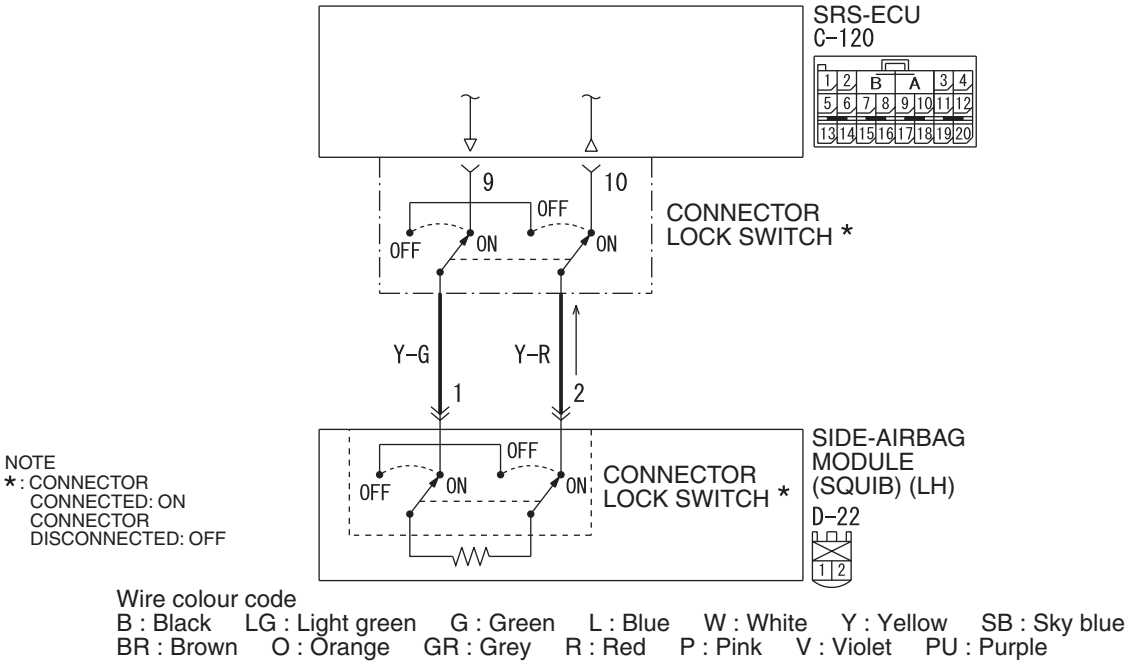

Wire colour code
B : Black LG : Light green G : Green L : Blue W : White Y : Yellow SB : Sky blue
BR : Brown O : Orange GR : Grey R : Red P : Pink V : Violet PU : Purple

W6X52X003A

⚠ CAUTION

If diagnosis code B1433 is set in the SRS-ECU, always diagnose the CAN bus lines.

OPERATION

- The SRS-ECU judges how severe a collision is by detecting signals from the left and right side impact sensors. If the impact is over a predetermined level, the SRS-ECU sends an ignition signal. At this time, if the side-airbag safing G-sensor is on, the SRS side-airbag will inflate.
- The ignition signal is input to the side-airbag module to inflate the side-airbag.

DIAGNOSIS CODE SET CONDITIONS

This diagnosis code is set if there is abnormal resistance between the input terminals of the side-airbag module (LH) (squib).

PROBABLE CAUSES

- Damaged wiring harnesses or connectors
- Short to the power supply in the side-airbag module (LH) (squib) harness
- Malfunction of the SRS-ECU

Main Index
Group TOC

DIAGNOSIS PROCEDURE

STEP 1. M.U.T.-III CAN bus diagnostics

Use the M.U.T.-III to diagnose the CAN bus lines.

Q: Is the check result normal?

YES : Go to Step 2 .

NO : Repair the CAN bus lines (Refer to GROUP 54F, Diagnosis P.54F-13).

STEP 2. Check whether the diagnosis code is reset.

Check again if the diagnosis code is set.

(1) Erase the diagnosis code.

(2) Ignition: "LOCK" (OFF) position to "ON"

(3) On completion, check that the diagnosis code is not reset.

Q: Is the diagnosis code set?

YES : Go to Step 3 .

NO : There is an intermittent malfunction such as poor engaged connector(s) or open circuit (Refer to GROUP 00, How to Cope with Intermittent Malfunction P.00-5).

STEP 3. Check the side-airbag module (LH) (M.U.T.-III diagnosis code).

(1) Disconnect the negative battery terminal.

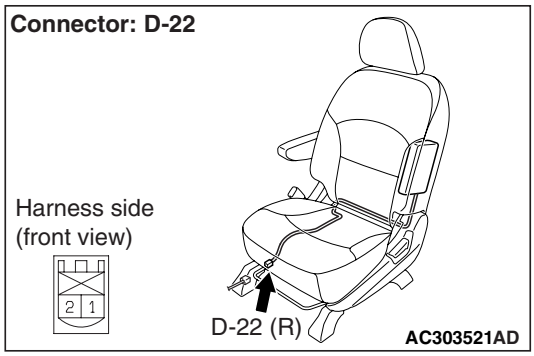

(2) Disconnect the side-airbag module (LH) connector D-22.

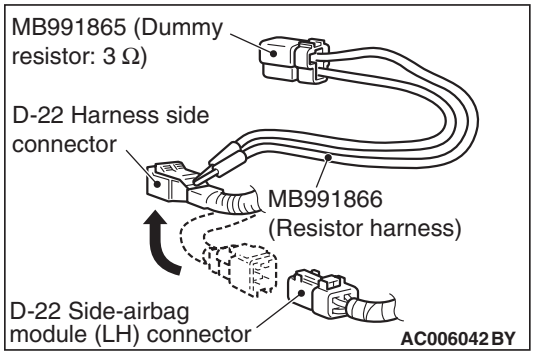

(3) Connect special tool dummy resistor (MB991865) to special tool resistor harness (MB991866).

⚠ CAUTION

Do not insert a test probe into the terminal from its front side directly, as the connector contact pressure may be weakened.

(4) Insert special tool MB991866 into the D-22 harness side connector by backprobing.

(5) Connect the negative battery terminal.

(6) Erase the diagnosis code memory, and check the diagnosis code.

Q: Is diagnosis code B1433 set?

YES : Go to Step 4 .

NO : Replace the frame assembly of the front seat (LH) (Refer to GROUP 52A, Front Seat P.52A-23).

STEP 4. Check the side-airbag module (LH) circuit. Voltage measurement at the SRS-ECU connector C-120.

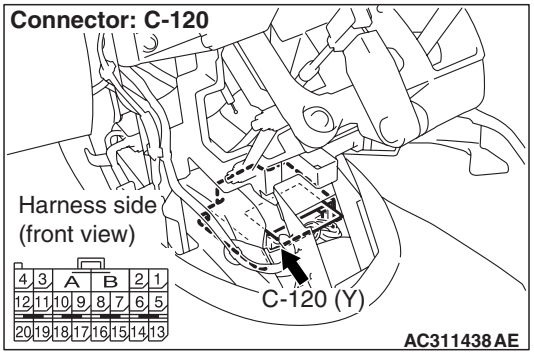

(1) Disconnect SRS-ECU connector C-120.

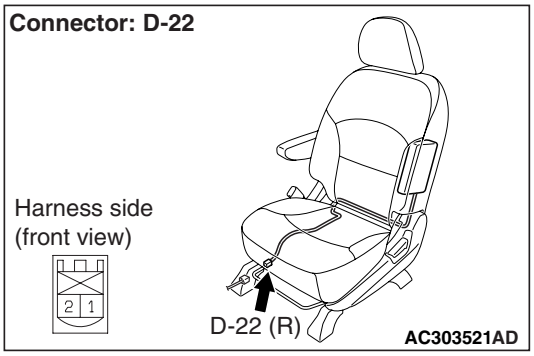

(2) Disconnect left hand side-airbag module (LH) connector D-22.

(3) Turn the ignition switch to the "ON" position.

⚠ CAUTION

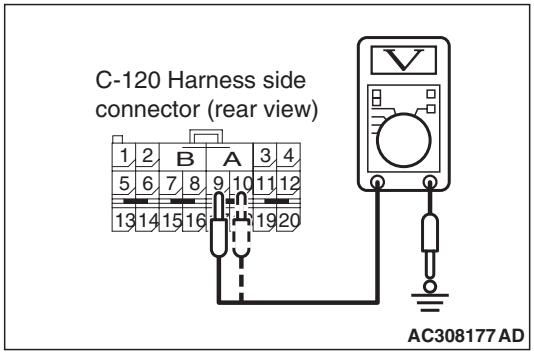

Do not insert a test probe into the terminal from its front side directly, as the connector contact pressure may be weakened.

(4) Measure the voltage between C-120 harness side connector terminals 9, 10 and body earth.

OK: 0 V

Q: Is the check result normal?

YES : Go to Step 5 .

NO : Repair the harness wires between SRS-ECU connector C-120 (terminal No.9 and 10) and side-airbag module (LH) connector D-22 (terminal No.1 and 2).

STEP 5. Check whether the diagnosis code is reset.

Q: Is diagnosis code B1433 set?

YES : Replace the SRS-ECU (Refer to P.52B-332).

NO : An intermittent malfunction is suspected (Refer to GROUP 00, How to Use Troubleshooting/Inspection Service Points P.00-5).

Main Index
Group TOC

Code No.B1437: Side Impact Sensor (Front) (LH) Power Supply Circuit System

Side Impact Sensor (Front) (LH) Circuit

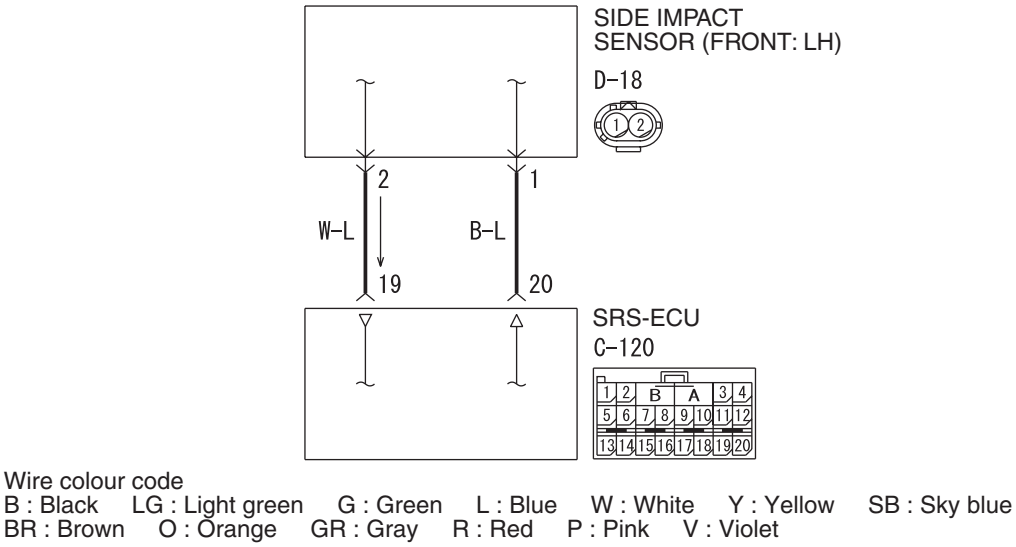

⚠ CAUTION

If diagnosis code B1437 is set in the SRS-ECU, always diagnose the CAN main bus line.

OPERATION

The side impact sensor includes an analogue G-sensor and CPU, etc. The CPU monitors the analogue G-sensor output signal. If the CPU judges that the side-airbags and curtain air bags should be deployed, it sends a fire signal to the SRS-ECU to deploy the side-airbags and curtain air bags. In addition, the CPU diagnoses the internal components of the side impact sensor. If a malfunction occurs, it requests the SRS-ECU to set a diagnosis code.

DIAGNOSIS CODE SET CONDITIONS

This diagnosis code is set if the power supply voltage of the side impact sensor (front) (LH) drops below the rated value for a continuous period of 5 seconds or more. However, diagnosis code B1437 will be automatically cleared and the SRS warning lamp will switch off if the condition returns to normal.

TROUBLESHOOTING HINTS

- Damaged wiring harnesses or connectors
- Malfunction of the side impact sensor (front) (LH)
- Malfunction of the SRS-ECU

PROBABLE CAUSES

STEP 1. M.U.T.-III CAN bus diagnostics

Use the M.U.T.-III to diagnose the CAN bus lines.

Q: Is the check result normal?

YES : Go to Step 2.

NO : Repair the CAN bus line (Refer to GROUP 54F, Diagnosis P.54F-13).

STEP 2. Check whether the diagnosis code is reset.

Check again if the diagnosis code is set.

(1) Erase the diagnosis code.
(2) Ignition: "LOCK" (OFF) position to "ON"
(3) On completion, check that the diagnosis code is not reset.

Q: Is the diagnosis code set?

YES : Go to Step 3.

NO : There is an intermittent malfunction such as poor engaged connector(s) or open circuit (Refer to GROUP 00, How to Cope with Intermittent Malfunction P.00-5).

Main Index
Group TOC

STEP 3. Check the harness wires for open circuit or short circuit between SRS-ECU connector C-120 (terminal No.19 and 20) and side impact sensor (front) (LH) connector D-18 (terminal No.2 and 1).

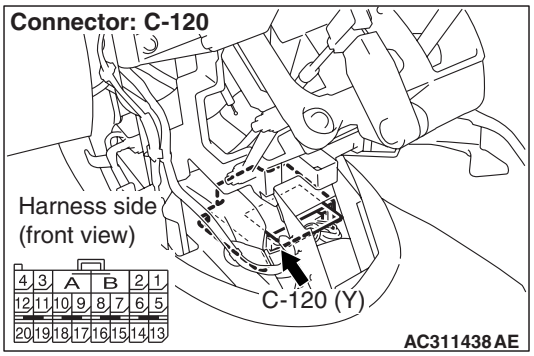

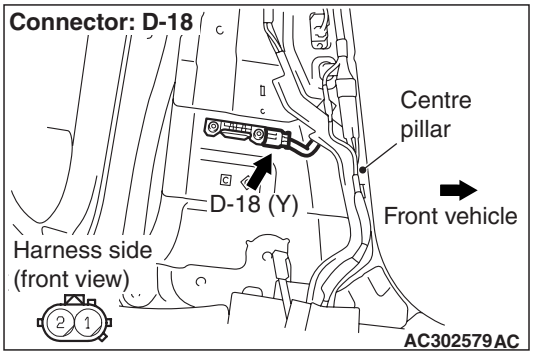

Q: Are the harness wires between SRS-ECU connector C-120 (terminal No.19 and 20) and side impact sensor (front) (LH) connector D-18 (terminal No.2 and 1) in good condition?

YES : Go to Step 4.

NO : . Replace the harness wires between SRS-ECU connector C-120 (terminal No.19 and 20) and side impact sensor (front) (LH) connector D-18 (terminal No.2 and 1).

STEP 4. Check the side impact sensor (front) (LH) (M.U.T.-III diagnosis code).

(1) Disconnect the negative battery terminal.
(2) Replace the side impact sensor (front) (LH) with the side impact sensor (front) (RH).
(3) Connect the negative battery terminal.
(4) Erase diagnosis code from memory, and check the diagnosis code.

Q: Is diagnosis code B1437 set?

YES : Replace the SRS-ECU (Refer to P.52B-332).

NO : Replace the side impact sensor (front) (LH) with a new one (Refer to P.52B-347). Go to Step 5.

STEP 5. Check whether the diagnosis code is reset.

Q: Is diagnosis code B1437 set?

YES : Replace the SRS-ECU (Refer to P.52B-332).

NO : An intermittent malfunction is suspected (Refer to GROUP 00, How to Use Troubleshooting/Inspection Service Points P.00-5).

Main Index
Group TOC

Code No.B1438: Side Impact Sensor (Front) (LH) (Squib) for Power Supply Circuit
Code No.B1439: Side Impact Sensor (Front) (LH) (Squib) for Communication System

Side Impact Sensor (Front) (LH) Circuit

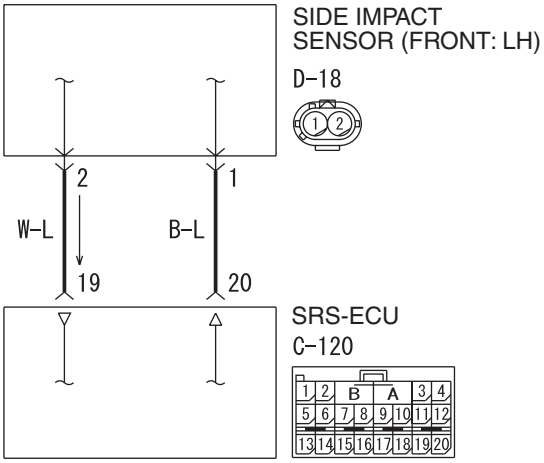

Wire colour code
B : Black LG : Light green G : Green L : Blue W : White Y : Yellow SB : Sky blue
BR : Brown O : Orange GR : Gray R : Red P : Pink V : Violet

W4X52E006A

⚠ CAUTION
If diagnosis code B1438 or B1439 is set in the SRS-ECU, always diagnose the CAN main bus line.

OPERATION
The side impact sensor includes an analogue G-sensor and CPU, etc. The CPU monitors the analogue G-sensor output signal. If the CPU judges that the side-airbags and curtain air bags should be deployed, it sends a fire signal to the SRS-ECU to deploy the side-airbags and curtain air bags. In addition, the CPU diagnoses the internal components of the side impact sensor. If a malfunction occurs, it requests the SRS-ECU to set a diagnosis code.

DIAGNOSIS CODE SET CONDITIONS
These diagnosis codes are set if communication between the side impact sensor (front) (LH) and the SRS-ECU is not possible or faulty.

PROBABLE CAUSES
- Damaged wiring harnesses or connectors
- Malfunction of the side impact sensor (front) (LH)
- Malfunction of the SRS-ECU

DIAGNOSIS PROCEDURE

STEP 1. M.U.T.-III CAN bus diagnostics
Use the M.U.T.-III to diagnose the CAN bus lines.

Q: Is the check result normal?
YES : Go to Step 2.
NO : Repair the CAN bus line (Refer to GROUP 54F, Diagnosis P.54F-13).

STEP 2. Check whether the diagnosis code is reset.
Check again if the diagnosis code is set.
(1) Erase the diagnosis code.
(2) Ignition: "LOCK" (OFF) position to "ON"
(3) On completion, check that the diagnosis code is not reset.

Q: Is the diagnosis code set?
YES : Go to Step 3 .
NO : There is an intermittent malfunction such as poor engaged connector(s) or open circuit (Refer to GROUP 00, How to Cope with Intermittent Malfunction P.00-5).

STEP 3. Check the side impact sensor (front) (LH) (M.U.T.-III diagnosis code).

(1) Disconnect the negative battery terminal.
(2) Replace the side impact sensor (front) (LH) with the side impact sensor (front) (RH).
(3) Connect the negative battery terminal.
(4) Erase diagnosis code from memory, and check the diagnosis code.

Q: Is diagnosis code B1428 or B1429 set?
YES : Replace the side impact sensor (front) (LH) with a new one (Refer to P.52B-347). Go to Step 5.
NO : Go to Step 4.

STEP 4. Check the harness wires for open circuit or short circuit between SRS-ECU connector C-120 (terminal No.19 and 20) and side impact sensor (front) (LH) connector D-18 (terminal No.2 and 1).

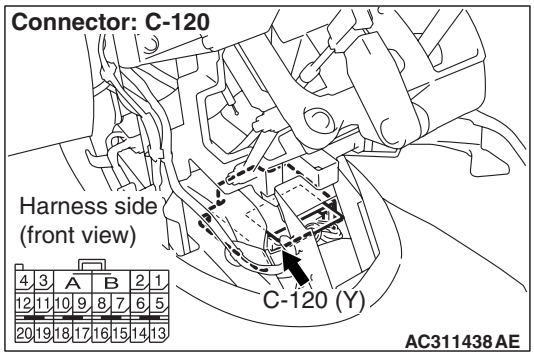

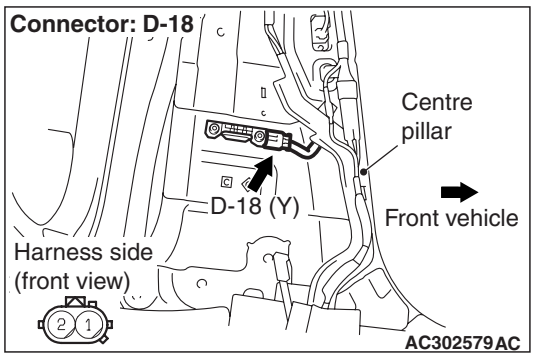

Q: Are the harness wires between SRS-ECU connector C-120 (terminal No.19 and 20) and side impact sensor (front) (LH) connector D-18 (terminal No.2 and 1) in good condition?
YES : Go to Step 5.
NO : Repair the harness wires between SRS-ECU connector C-120 (terminal No.19 and 20) and side impact sensor (front) (LH) connector D-18 (terminal No.2 and 1).

STEP 5. Check whether the diagnosis code is reset.

Q: Is diagnosis code B1438 or B1439 set?
YES : Replace the SRS-ECU (Refer to P.52B-332).
NO : An intermittent malfunction is suspected (Refer to GROUP 00, How to Use Troubleshooting/Inspection Service Points P.00-5).

Main Index
Group TOC

Code No.B1440: Curtain air bag module (squib) (RH) system (short-circuited between terminals of the squib circuit)

Curtain Air Bag Module (Squib) (RH) Circuit

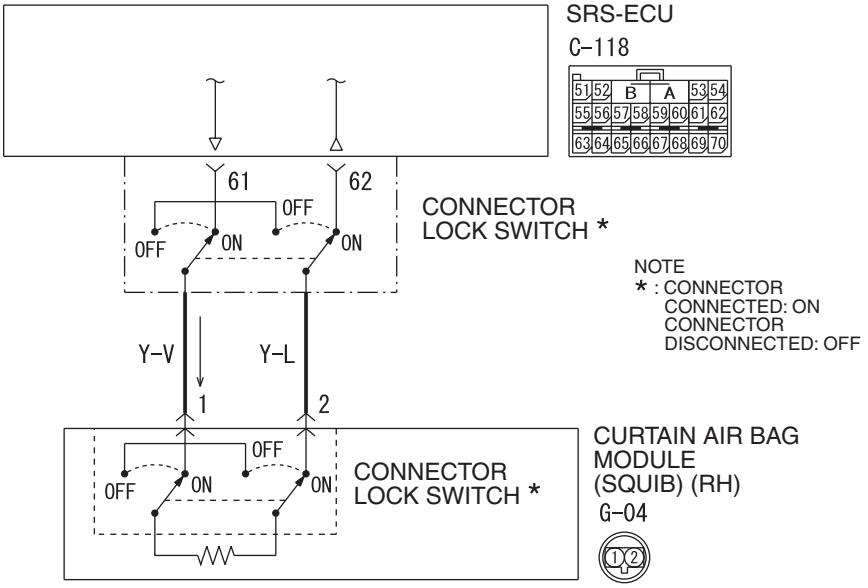

Wire colour code
B : Black LG : Light green G : Green L : Blue W : White Y : Yellow SB : Sky blue
BR : Brown O : Orange GR : Gray R : Red P : Pink V : Violet

W4X52E012A

⚠ CAUTION

If diagnosis code B1440 is set in the SRS-ECU, always diagnose the CAN bus lines.

OPERATION

The SRS-ECU judges how severe a collision is by detecting signals from the side impact sensors and the side-airbag safing G-sensor. If the impact is over a predetermined level, the SRS-ECU outputs an ignition signal. At this time, if the side air bag safing G-sensor is on, the curtain air bag module will deploy.

DIAGNOSIS CODE SET CONDITIONS

This diagnosis code is set if one curtain air bag module squib (RH) wire shorted to the other. However, if no diagnosis code resets, the SRS warning lamp will be switched off (diagnosis code will be retained).

PROBABLE CAUSES

- Improper engaged connector or defective short spring*
- Short circuit between the curtain air bag module (squib) (RH) circuit terminals
- Damaged connector(s)
- Malfunction of the SRS-ECU

*NOTE: *: The squib circuit connectors integrate a "short" spring (which prevents the air bag from deploying unintentionally due to static electricity by shorting the positive wire to the earth wire in the squib circuit when the connectors are disconnected). Therefore, if connector C-118 or G-04 is damaged or improperly engaged, the short spring may not be released when the connector is connected.*

DIAGNOSIS PROCEDURE

STEP 1. M.U.T.-III CAN bus diagnostics

Use the M.U.T.-III to diagnose the CAN bus lines.

Q: Is the check result normal?

YES : Go to Step 2

NO : Repair the CAN bus lines (Refer to GROUP 54F, DiagnosisP.54F-13).

STEP 2. Check whether the diagnosis code is reset.

Check again if the diagnosis code is set.
(1) Erase the diagnosis code.
(2) Ignition: "LOCK" (OFF) position to "ON"
(3) On completion, check that the diagnosis code is not reset.

Q: Is the diagnosis code set?
YES : Go to Step 3 .
NO : There is an intermittent malfunction such as poor engaged connector(s) or open circuit (Refer to GROUP 00, How to Cope with Intermittent Malfunction P.00-5).

STEP 3. M.U.T.-III diagnosis code

⚠ CAUTION
To prevent damage to M.U.T.-III, always turn the ignition switch to the "LOCK" (OFF) position before connecting or disconnecting M.U.T.-III.

(1) Turn the ignition switch to the "ON" position.
(2) Check if the diagnosis code is set.
(3) Turn the ignition switch to the "LOOK" (OFF) position.

Q: Is diagnosis code B1519 set?
YES : Go to Step 4.
NO : Go to Step 5.

STEP 4. Connector lock check: SRS-ECU connector C-118 (M.U.T.-III diagnosis code)

(1) Disconnect the negative battery terminal.

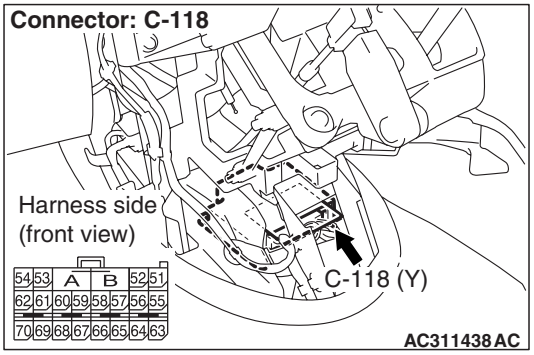

(2) Disconnect connectors C-118, and then reconnect them.
(3) Connector the negative battery terminal.
(4) Erase the diagnosis code memory, and check the diagnosis code.

Q: Is diagnosis code B1440 set?
YES : Go to Step 6.
NO : The procedure is complete. It is assumed that diagnosis code B1440 set as connector C-118 was engaged improperly.

STEP 5. Connector lock check: SRS-ECU connector C-118 and curtain air bag module (RH) connector G-04 (M.U.T.-III diagnosis code)

(1) Disconnect the negative battery terminal.

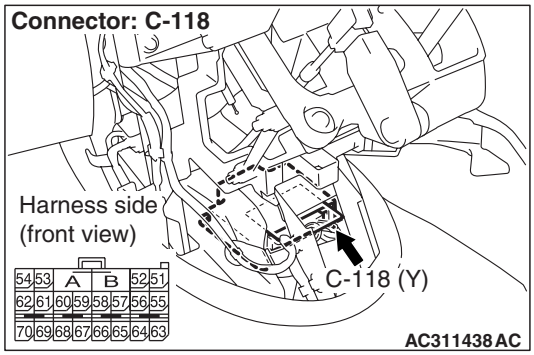

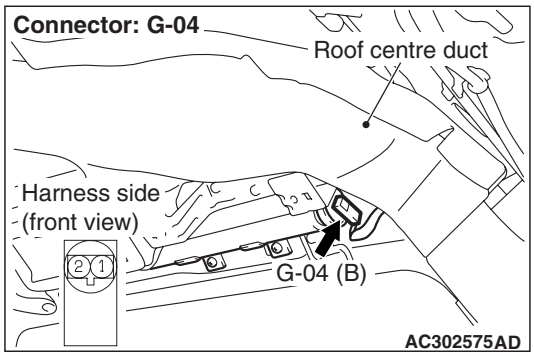

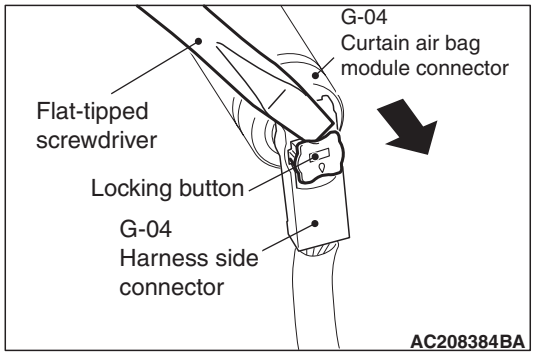

(2) Disconnect connectors C-118 and G-04, and then reconnect them. For connector G-04, use a flat-tipped screwdriver to pull out the locking button at the harness side connector, and then disconnect the connector.
(3) Connector the negative battery terminal.
(4) Erase the diagnosis code memory, and check the diagnosis code.

Q: Is diagnosis code B1440 set?
YES : Go to Step 6.
NO : The procedure is complete. It is assumed that diagnosis code B1440 set as connector C-118 or G-04 was engaged improperly.

STEP 6. Check the curtain air bag module (RH). (M.U.T.-III diagnosis code)

(1) Disconnect the negative battery terminal.

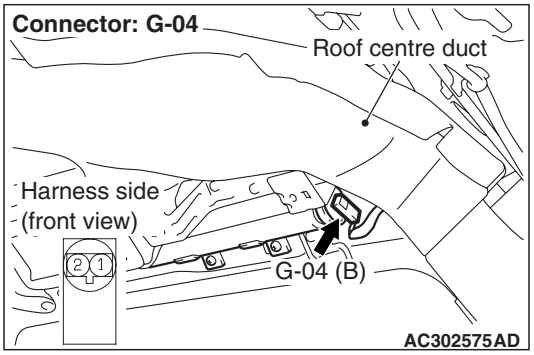

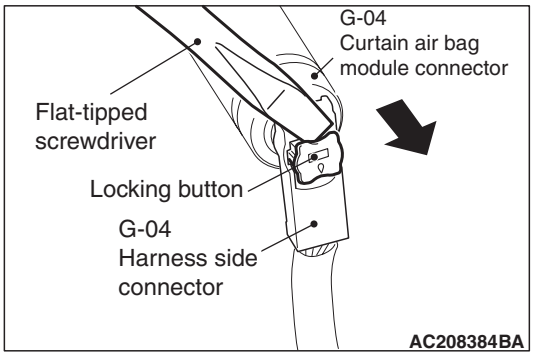

(2) Disconnect curtain air bag module (RH) connector G-04. Use a flat-tipped screwdriver to unlock the locking button at the harness side connector by withdrawing it toward you in two stages, and then disconnect the connector.

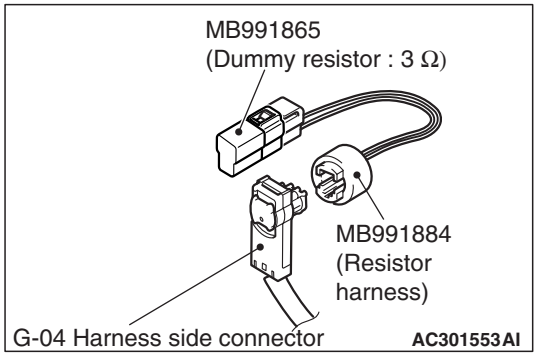

(3) Connect special tool dummy resistor (MB991865) to special tool resistor harness (MB991884).
(4) Connect special tool MB991884 to the G-04 harness side connector.
(5) Connect the negative battery terminal.
(6) Erase diagnosis code memory, and then check the diagnosis code.

Q: Is diagnosis code B1440 set?

YES : . Go to Step 7.

NO : . Replace the curtain air bag module (RH) (Refer to P.52B-342).

STEP 7. Check the curtain air bag module (RH) circuit. Resistance measurement at the SRS-ECU connector C-118

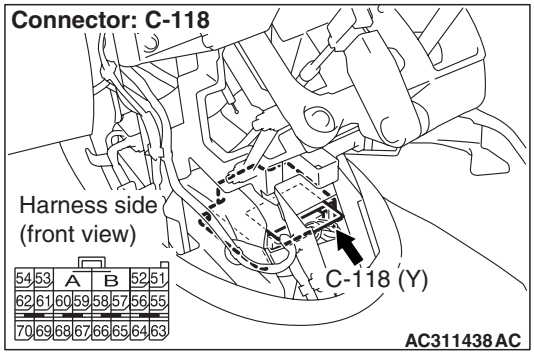

(1) Disconnect SRS-ECU connector C-118.

⚠ DANGER

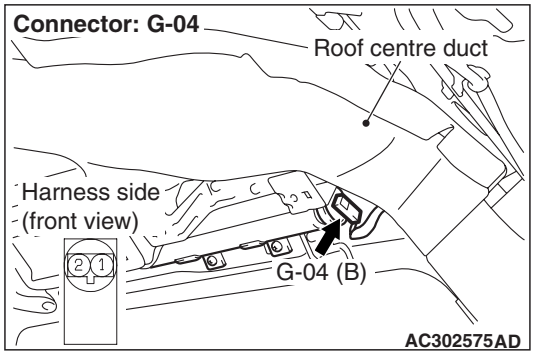

To prevents the air bag from deploying unintentionally, disconnect the curtain air bag module (RH) connector G-04 to short the squib circuit.

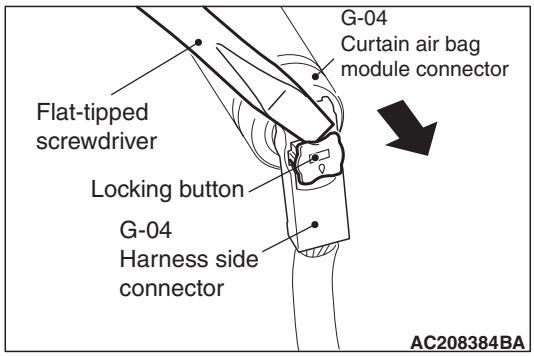

(2) Disconnect curtain air bag module (RH) connector G-04. Use a flat-tipped screwdriver to unlock the locking button at the harness side connector by withdrawing it toward you in two stages, and then disconnect the connector.

⚠ CAUTION

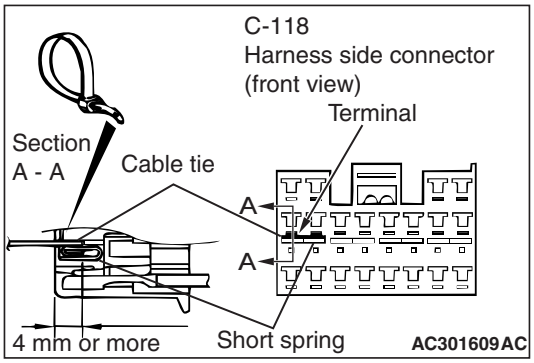

Insert an insulator such as a cable tie to a depth of 4mm or more, otherwise the short bar will not be released.

(3) Insert a cable tie [3 mm wide, 0.5 mm thick] between terminals 61, 62 and the short spring to release the short spring.

⚠ CAUTION

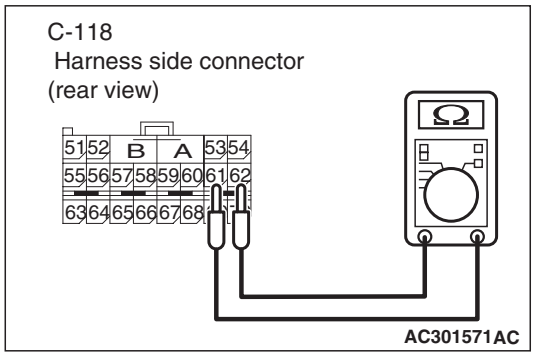

Do not insert a test probe into the terminal from its front side directly as the connector contact pressure may be weakened.

(4) Resistance measurement between C-118 harness side connector terminals 61 and 62.

OK: Open circuit

Q: Is the check result normal?

YES : Go to Step 8.

NO : Repair the harness wire between SRS-ECU connector C-118 (terminal No.61and 62) and curtain air bag module (RH) connector G-04 (terminal No.1 and 2).

STEP 8. Check whether the diagnosis code is reset.

Q: Is diagnosis code B1440 set?

YES : Replace the SRS-ECU (Refer toP.52B-332).

NO : The procedure is complete. If no malfunctions are found in all steps, an intermittent malfunction is suspected (Refer to GROUP 00, How to Use Troubleshooting/Inspection Service Points P.00-5).

Main Index
Group TOC

Code No.B1441: Curtain air bag module (squib) (RH) system (open-circuited in the squib circuit)

Curtain Air Bag Module (Squib) (RH) Circuit

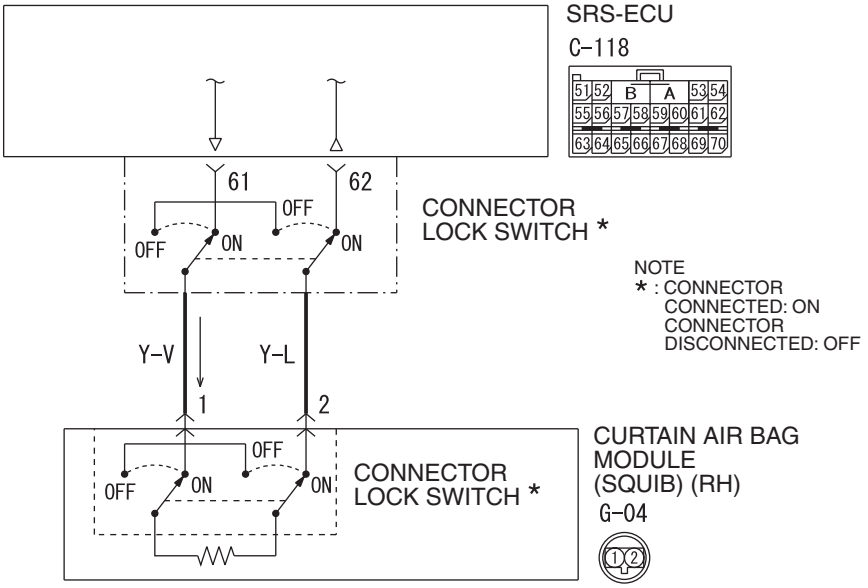

Wire colour code
B : Black LG : Light green G : Green L : Blue W : White Y : Yellow SB : Sky blue
BR : Brown O : Orange GR : Gray R : Red P : Pink V : Violet

W4X52E012A

⚠ CAUTION

If diagnosis code B1441 is set in the SRS-ECU, always diagnose the CAN main bus line.

OPERATION

The SRS-ECU judges how severe a collision is by detecting signals from the side impact sensors and the side air bag safing G-sensor. If the impact is over a predetermined level, the SRS-ECU outputs an ignition signal. At this time, if the side air bag safing G-sensor is on, the curtain air bag module will deploy.

DIAGNOSIS CODE SET CONDITIONS

This diagnosis code is set if curtain air bag module squib (RH) wire(s) are open-circuited. However, if no diagnosis code resets, the SRS warning lamp will be switched off (diagnosis code will be retained).

PROBABLE CAUSES

- Improper connector contact
- Open circuit in the curtain air bag module (squib) (RH) circuit
- Malfunction of the SRS-ECU

DIAGNOSIS PROCEDURE

STEP 1. M.U.T.-III CAN bus diagnostics

Use the M.U.T.-III to diagnose the CAN bus lines.

Q: Is the check result normal?

YES : Go to Step 2.

NO : Repair the CAN bus line (Refer to GROUP 54F, Diagnosis P.54F-13).

STEP 2. Check whether the diagnosis code is reset.

Check again if the diagnosis code is set.

(1) Erase the diagnosis code.
(2) Ignition: "LOCK" (OFF) position to "ON"
(3) On completion, check that the diagnosis code is not reset.

Q: Is the diagnosis code set?

YES : Go to Step 3.

NO : There is an intermittent malfunction such as poor engaged connector(s) or open circuit (Refer to GROUP 00, How to Cope with Intermittent Malfunction P.00-5).

STEP 3. Check the curtain air bag module (RH) (M.U.T.-III diagnosis code).

(1) Disconnect the negative battery terminal.

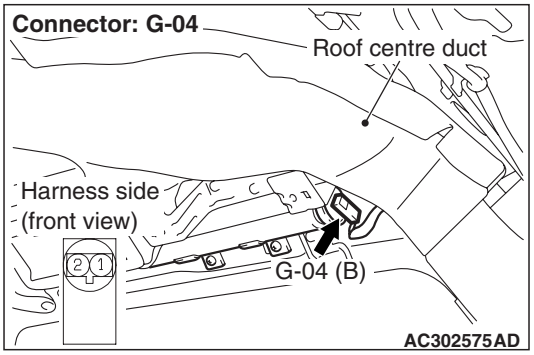

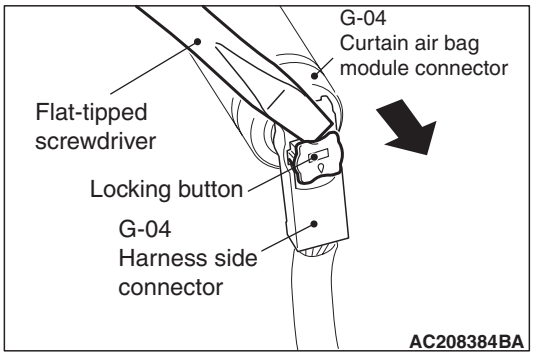

(2) Disconnect curtain air bag module (RH) connector G-04. Use a flat-tipped screwdriver to unlock the locking button at the harness side connector by withdrawing it toward you in two stages, and then disconnect the connector.

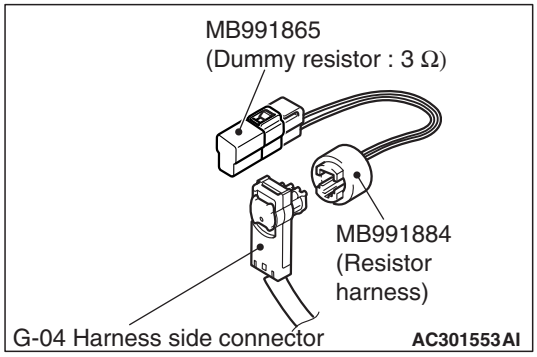

(3) Connect special tool dummy resistor (MB991865) to special tool resistor harness (MB991884).
(4) Connect special tool MB991884 to the G-04 harness side connector.
(5) Connect the negative battery terminal.
(6) Erase diagnosis code memory, and then check the diagnosis code.

Q: Is diagnosis code B1441 set?

YES : . Go to Step 4.

NO : . Replace the curtain air bag module (RH) (Refer to P.52B-342).

STEP 4. Resistance measurement between SRS-ECU connector C-118 (terminal No.61 and 62) and the curtain air bag module (RH) connector G-04 (terminal No.1 and 2)

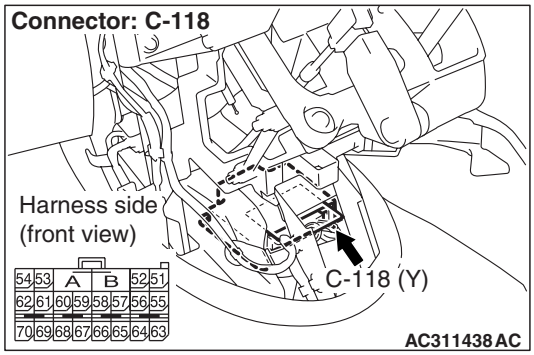

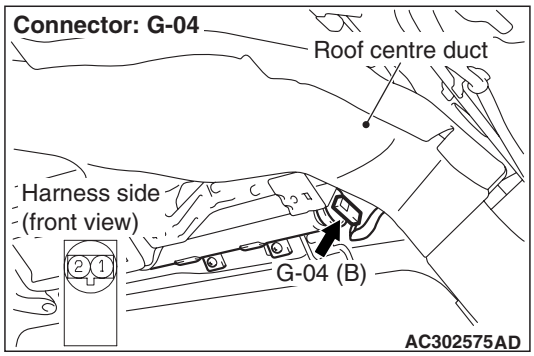

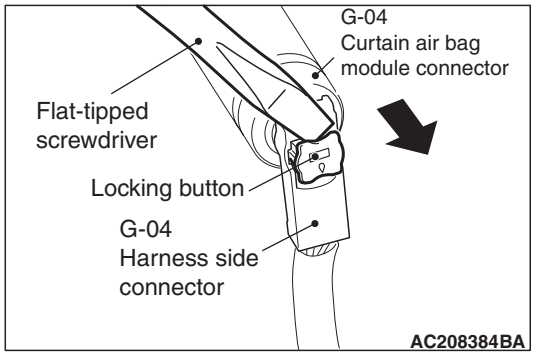

(1) Disconnect SRS-ECU connector C-118 and curtain air bag module (RH) connector G-04, and measure at the wiring harness side. For connector G-04, use a flat-tipped screwdriver to unlock the locking button at the harness side connector by withdrawing it toward you in two stages, and then disconnect the connector.

Main Index
Group TOC

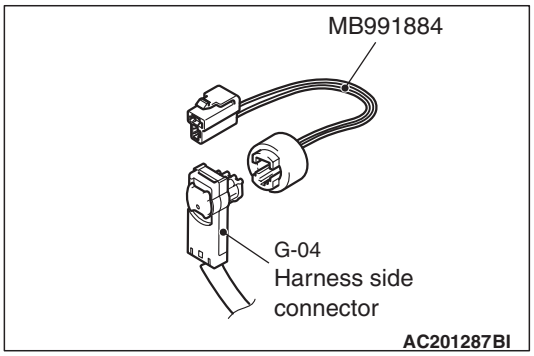

(2) Connect G-04 harness side connector to special tool resistor harness (MB991884).

⚠ CAUTION

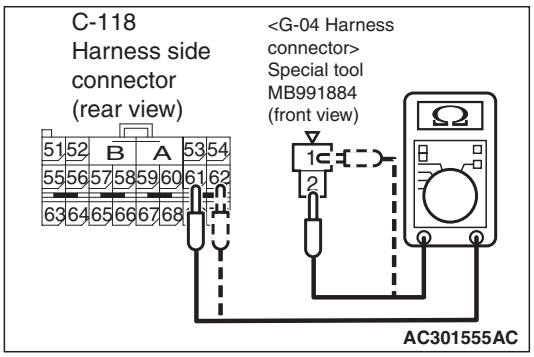

Do not insert a test probe into the terminal from its front side directly as the connector contact pressure may be weakened.

(3) Resistance measurement between the following terminals.
- SRS-ECU connector C-118 terminal No.62 and special tool terminal No.1
- SRS-ECU connector C-118 terminal No.61 and special tool terminal No.2

OK: Less than 2 Ω

Q: Are the check results normal?
YES : Go to Step 5.
NO : Repair the harness wire between SRS-ECU connector C-118 (terminal No.61and 62) and curtain air bag module (RH) connector G-04 (terminal No.1 and 2).

STEP 5. Check whether the diagnosis code is reset.

Q: Is diagnosis code No.B1441 set?
YES : Replace the SRS-ECU (Refer to P.52B-332).
NO : An intermittent malfunction is suspected (Refer to GROUP 00, How to Use Troubleshooting/Inspection Service Points P.00-5).

Main Index
Group TOC

Code No.B1442: Curtain air bag module (squib) (RH) system (short-circuited to the earth)

Curtain Air Bag Module (Squib) (RH) Circuit

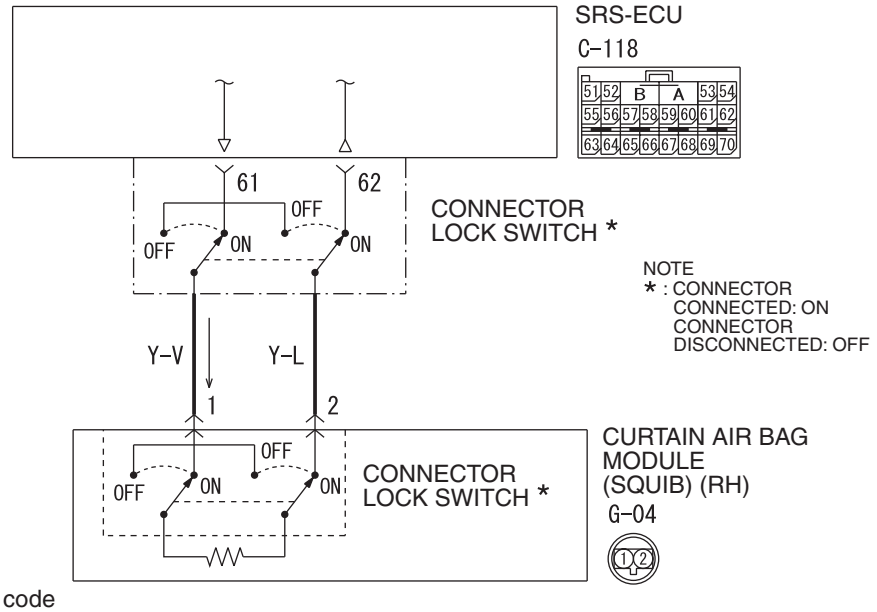

Wire colour code
B : Black LG : Light green G : Green L : Blue W : White Y : Yellow SB : Sky blue
BR : Brown O : Orange GR : Gray R : Red P : Pink V : Violet

W4X52E012A

⚠ CAUTION

If diagnosis code B1442 is set in the SRS-ECU, always diagnose the CAN main bus line.

OPERATION

The SRS-ECU judges how severe a collision is by detecting signals from the side impact sensors and the side air bag safing G-sensor. If the impact is over a predetermined level, the SRS-ECU outputs an ignition signal. At this time, if the side air bag safing G-sensor is on, the curtain air bag module will deploy.

DIAGNOSIS CODE SET CONDITIONS

This diagnosis code is set if the curtain air bag module squib (RH) wire(s) are short-circuited to the earth.

PROBABLE CAUSES

- Damaged wiring harnesses or connectors
- Short to the earth in the curtain air bag module (squib) (RH) harness
- Malfunction of the SRS-ECU

DIAGNOSIS PROCEDURE

STEP 1. M.U.T.-III CAN bus diagnostics

Use the M.U.T.-III to diagnose the CAN bus lines.

Q: Is the check result normal?

YES : Go to Step 2.

NO : Repair the CAN bus line (Refer to GROUP 54F, Diagnosis P.54F-13).

STEP 2. Check whether the diagnosis code is reset.

Check again if the diagnosis code is set.

(1) Erase the diagnosis code.
(2) Ignition: "LOCK" (OFF) position to "ON"
(3) On completion, check that the diagnosis code is not reset.

Q: Is the diagnosis code set?

YES : Go to Step 3.

NO : There is an intermittent malfunction such as poor engaged connector(s) or open circuit (Refer to GROUP 00, How to Cope with Intermittent Malfunction P.00-5).

Main Index
Group TOC

STEP 3. Check the curtain air bag module (RH) (M.U.T.-III diagnosis code).

(1) Disconnect the negative battery terminal.

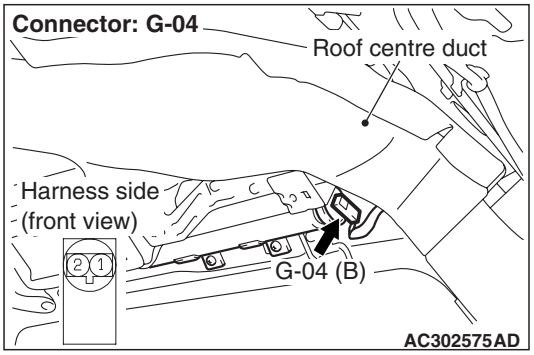

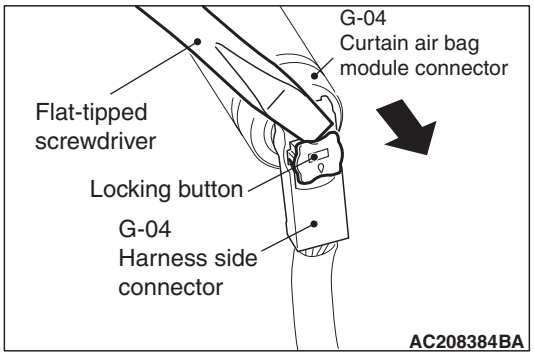

(2) Disconnect curtain air bag module connector G-04. Use a flat-tipped screwdriver to unlock the locking button at the harness side connector by withdrawing it toward you in two stages, and then disconnect the connector.

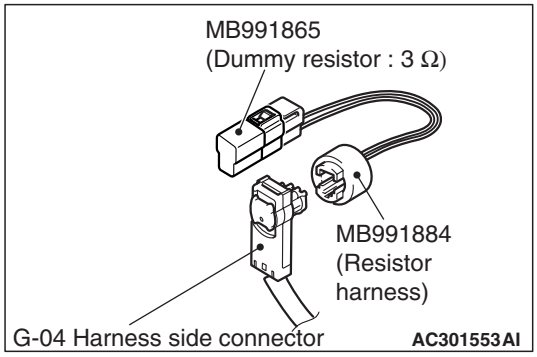

(3) Connect special tool dummy resistor (MB991865) to special tool resistor harness (MB991884).

(4) Connect special tool (MB991884) to the G-04 harness side connector.

(5) Connect the negative battery terminal.

(6) Erase diagnosis code memory, and check the diagnosis code.

Q: Is diagnosis code B1442 set?

YES : Go to Step 4.

NO : Replace the curtain air bag module (RH) (Refer to P.52B-342).

STEP 4. Check the curtain air bag module (RH) circuit. Resistance measurement at the SRS-ECU connector C-118.

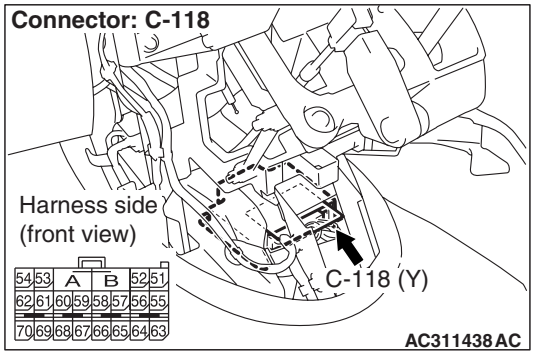

(1) Disconnect SRS-ECU connector C-118.

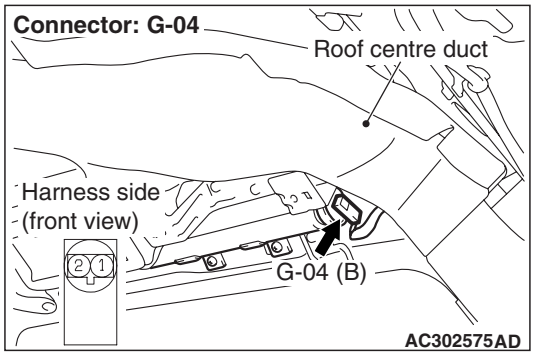

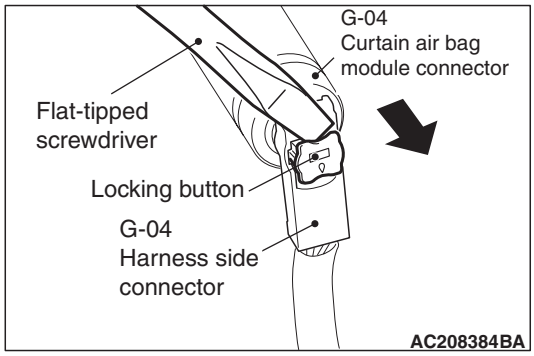

Main Index
Group TOC

(2) Disconnect curtain air bag module connector G-04. Use a flat-tipped screwdriver to unlock the locking button at the harness side connector by withdrawing it toward you in two stages, and then disconnect the connector.

⚠ CAUTION

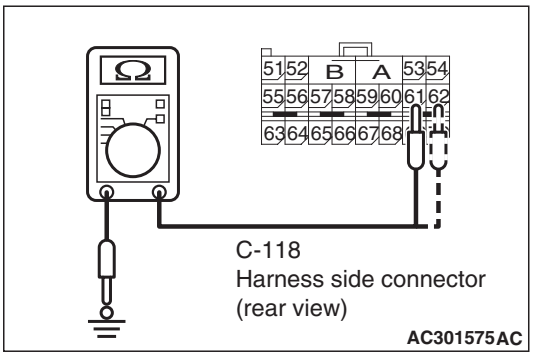

Do not insert a test probe into the terminal from its front side directly as the connector contact pressure may be weakened.

(3) Resistance measurement between C-118 harness side connector terminals 61, 62 and body earth.

OK: Open circuit

Q: Is the check result normal?

YES : Go to Step 5.

NO : Repair the harness wire between SRS-ECU connector C-118 (terminal No.61and 62) and curtain air bag module (RH) connector G-04 (terminal No.1 and 2).

STEP 5. Check whether the diagnosis code is reset.

Q: Is diagnosis code B1442 set?

YES : Replace the SRS-ECU (Refer toP.52B-332).

NO : An intermittent malfunction is suspected (Refer to GROUP 00, How to Use Troubleshooting/Inspection Service Points P.00-5).

Code No.B1443: Curtain air bag module (squib) (RH) system (short-circuited to the power supply)

Curtain Air Bag Module (Squib) (RH) Circuit

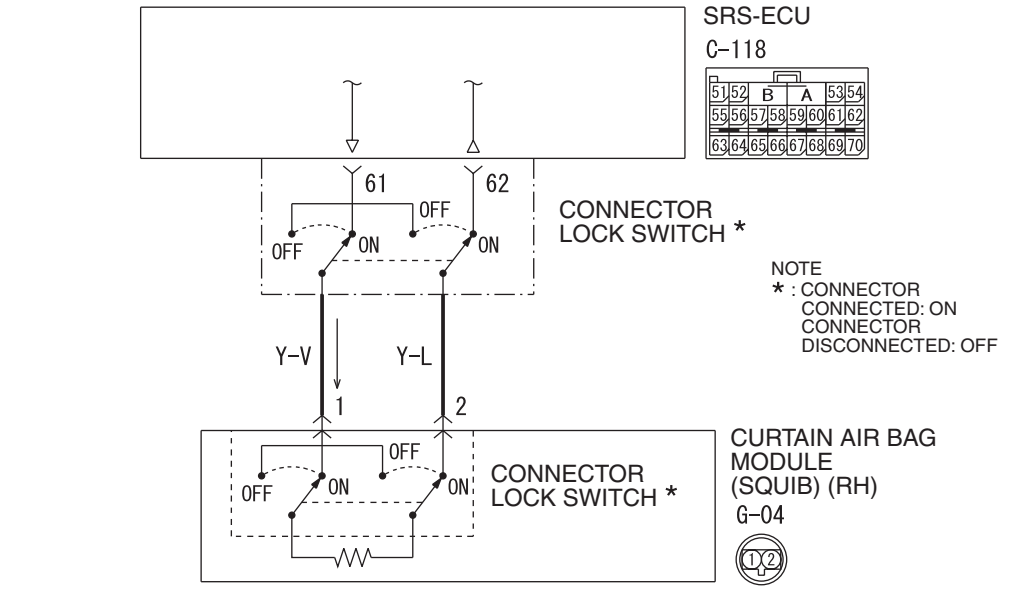

Wire colour code
B : Black LG : Light green G : Green L : Blue W : White Y : Yellow SB : Sky blue
BR : Brown O : Orange GR : Gray R : Red P : Pink V : Violet

W4X52E012A

Main Index
Group TOC

⚠ CAUTION

If diagnosis code B1443 is set in the SRS-ECU, always diagnose the CAN main bus line.

OPERATION

The SRS-ECU judges how severe a collision is by detecting signals from the side impact sensors and the side air bag safing G-sensor. If the impact is over a predetermined level, the SRS-ECU outputs an ignition signal. At this time, if the side air bag safing G-sensor is on, the curtain air bag module will deploy.

DIAGNOSIS CODE SET CONDITIONS

This diagnosis code is set if the curtain air bag module squib (RH) wire(s) are short-circuited to the power supply.

PROBABLE CAUSES

- Damaged wiring harnesses or connectors
- Short to the power supply in the curtain air bag module (squib) (RH) harness
- Malfunction of the SRS-ECU

DIAGNOSIS PROCEDURE

STEP 1. M.U.T.-III CAN bus diagnostics

Use the M.U.T.-III to diagnose the CAN bus lines.

Q: Is the check result normal?

YES : Go to Step 2.

NO : Repair the CAN bus line (Refer to GROUP 54F, Diagnosis P.54F-13).

STEP 2. Check whether the diagnosis code is reset.

Check again if the diagnosis code is set.

(1) Erase the diagnosis code.
(2) Ignition: "LOCK" (OFF) position to "ON"
(3) On completion, check that the diagnosis code is not reset.

Q: Is the diagnosis code set?

YES : Go to Step 3.

NO : There is an intermittent malfunction such as poor engaged connector(s) or open circuit (Refer to GROUP 00, How to Cope with Intermittent Malfunction P.00-5).

STEP 3. Check the curtain air bag module (RH) (M.U.T.-III diagnosis code).

(1) Disconnect the negative battery terminal.

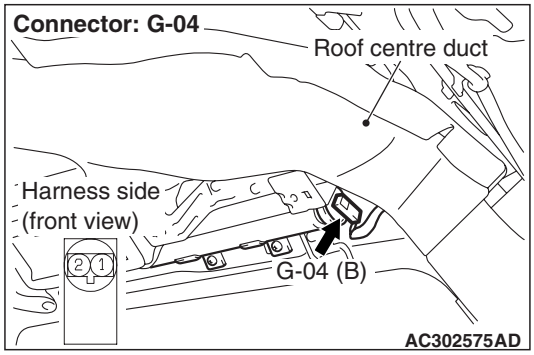

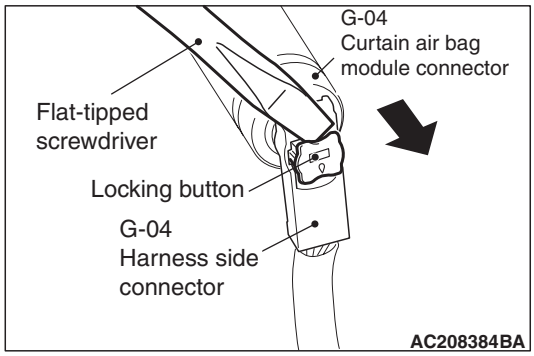

(2) Disconnect curtain air bag module (RH) connector G-04. Use a flat-tipped screwdriver to unlock the locking button at the harness side connector by withdrawing it toward you in two stages, and then disconnect the connector.

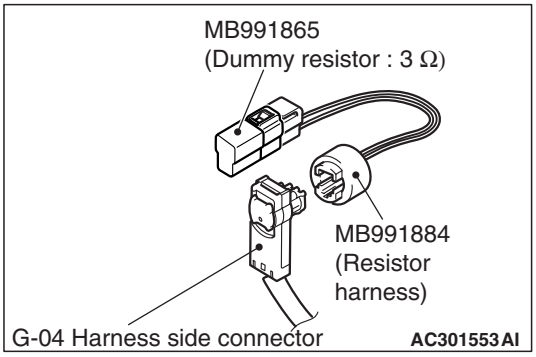

(3) Connect special tool dummy resistor (MB991865) to special tool resistor harness (MB991884).
(4) Connect special tool (MB991884) to the G-04 harness side connector.
(5) Connect the negative battery terminal.
(6) Erase diagnosis code memory, and check the diagnosis code.

Q: Is diagnosis code B1443 set?

YES : Go to Step 4.

NO : Replace the curtain air bag module (RH) (Refer to P.52B-342).

STEP 4. Check the curtain air bag module circuit. Voltage measurement at the SRS-ECU connector C-118.

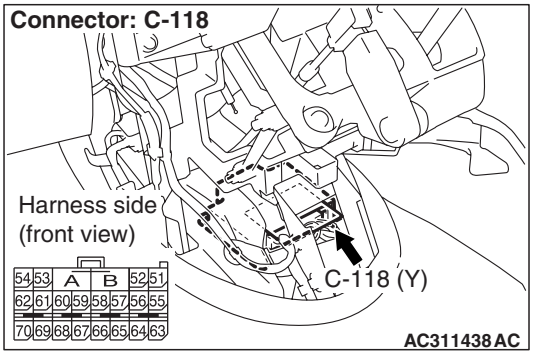

(1) Disconnect SRS-ECU connector C-118.

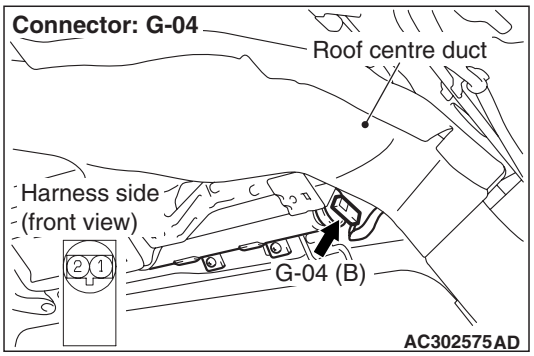

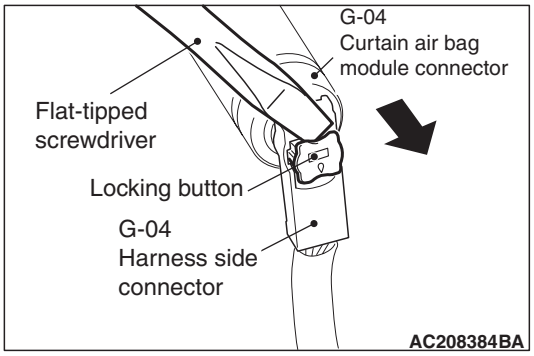

(2) Disconnect curtain air bag module (RH) connector G-04. Use a flat-tipped screwdriver to unlock the locking button at the harness side connector by withdrawing it toward you in two stages, and then disconnect the connector.

(3) Turn the ignition switch to the "ON" position.

⚠ CAUTION

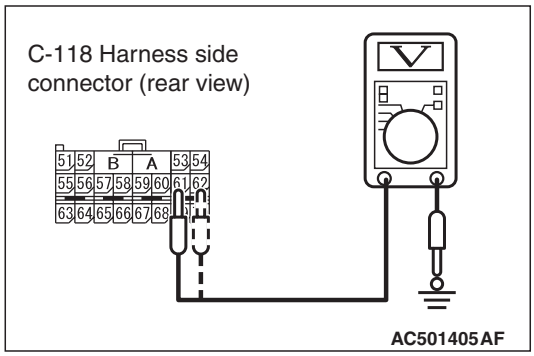

Do not insert a test probe into the terminal from its front side directly as the connector contact pressure may be weakened.

(4) Voltage measurement between C-118 harness side connector terminals 61, 62 and body earth.

OK: 0 V

Q: Is the measured voltage within the specified range?

YES : Go to Step 5.

NO : Repair the harness wire between SRS-ECU connector C-118 (terminal No.61 and 62) and curtain air bag module (RH) connector G-04 (terminal No.1 and 2).

STEP 5. Check whether the diagnosis code is reset.

Q: Is diagnosis code B1443 set?

YES : Replace the SRS-ECU (Refer to P.52B-332).

NO : An intermittent malfunction is suspected (Refer to GROUP 00, How to Use Troubleshooting/Inspection Service Points P.00-5).

Main Index
Group TOC

DTC B1446: Side Impact Sensor (Rear) (RH) System for Fault 1
DTC B1456: Side Impact Sensor (Rear) (LH) System for Fault 1

⚠ CAUTION
If diagnosis code B1446 or B1456 is set in the SRS-ECU, always diagnose the CAN main bus line.

DIAGNOSIS CODE SET CONDITIONS

These diagnosis codes are set if the following conditions are detected from the analog G-sensor inside the side impact sensor output:

- Analogue G-sensor is not operating.
- Analogue G-sensor characteristics are abnormal.
- Analogue G-sensor output is abnormal.

PROBABLE CAUSES

Malfunction of side impact sensor (rear) (RH) (for diagnosis code B1446) and side impact sensor (rear) (LH) (for diagnosis code B1456)

DIAGNOSIS PROCEDURE

STEP 1. M.U.T.-III CAN bus diagnostics
Use the M.U.T.-III to diagnose the CAN bus lines.

Q: Is the check result normal?
YES : Go to Step 2.
NO : Repair the CAN bus line (Refer to GROUP 54F, Diagnosis P.54F-13).

STEP 2. Check whether the diagnosis code is reset.
Check again if the diagnosis code is set.
(1) Erase the diagnosis code.
(2) Ignition: "LOCK" (OFF) position to "ON"
(3) On completion, check that the diagnosis code is not reset.

Q: Is the diagnosis code set?
YES : Go to Step 3 .
NO : There is an intermittent malfunction such as poor engaged connector(s) or open circuit (Refer to GROUP 00, How to Cope with Intermittent Malfunction P.00-5).

STEP 3. Check the side impact sensor (rear) (M.U.T.-III diagnosis code).
Replace side impact sensor (rear) (RH) (for diagnosis code B1446) and side impact sensor (rear) (LH) (for diagnosis code B1456) (Refer to P.52B-347).
Check the diagnosis code.

Q: Is either diagnosis code B1446 or B1456 set?
YES : Replace the SRS-ECU (Refer to P.52B-332).
NO : The procedure is complete.

Main Index
Group TOC

Code No.B1447: Side Impact Sensor (Rear) (RH) Power Supply Circuit System

Side Impact Sensor (Rear) (RH) Circuit

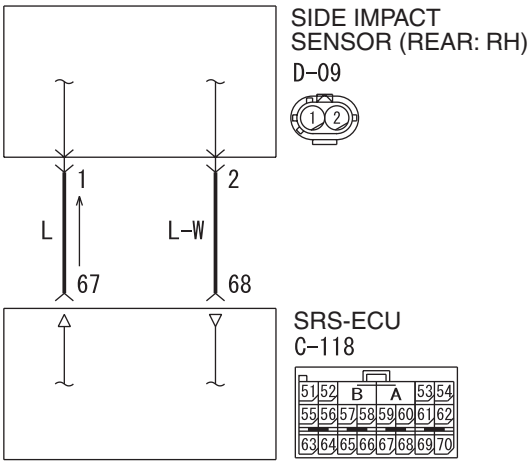

Wire colour code
B : Black LG : Light green G : Green L : Blue W : White Y : Yellow SB : Sky blue
BR : Brown O : Orange GR : Gray R : Red P : Pink V : Violet

W4X52X010A

⚠ CAUTION

If diagnosis code B1447 is set in the SRS-ECU, always diagnose the CAN main bus line.

OPERATION

The side impact sensor includes an analogue G-sensor and CPU, etc. The CPU monitors the analogue G-sensor output signal. If the CPU judges that the curtain air bags should be deployed, it sends a fire signal to the SRS-ECU to deploy the curtain air bags. In addition, the CPU diagnoses the internal components of the side impact sensor. If a malfunction occurs, it requests the SRS-ECU to set a diagnosis code.

DIAGNOSIS CODE SET CONDITIONS

This diagnosis code will set when the power supply voltage to the side impact sensor (rear) (RH) remains less than a predetermined value for five seconds. However, if the system returns to normal condition, code number B1447 will be erased automatically and the SRS warning lamp will go out.

PROBABLE CAUSES

- Damaged wiring harness or connectors
- Malfunction of the side impact sensor (rear) (RH)
- Malfunction of the SRS-ECU

DIAGNOSIS PROCEDURE

STEP 1. M.U.T.-III CAN bus diagnostics

Use the M.U.T.-III to diagnose the CAN bus lines.

Q: Is the check result normal?

YES : Go to Step 2.

NO : Repair the CAN bus line (Refer to GROUP 54F, Diagnosis P.54F-13).

STEP 2. Check whether the diagnosis code is reset.

Check again if the diagnosis code is set.

(1) Erase the diagnosis code.
(2) Ignition: "LOCK" (OFF) position to "ON"
(3) On completion, check that the diagnosis code is not reset.

Q: Is the diagnosis code set?

YES : Go to Step 3 .

NO : There is an intermittent malfunction such as poor engaged connector(s) or open circuit (Refer to GROUP 00, How to Cope with Intermittent Malfunction P.00-5).

Main Index
Group TOC

STEP 3. Check the harness wires for open circuit or short circuit between SRS-ECU connector C-118 (terminal No.67 and 68) and side impact sensor (rear) (RH) connector D-09 (terminal No.1 and 2).

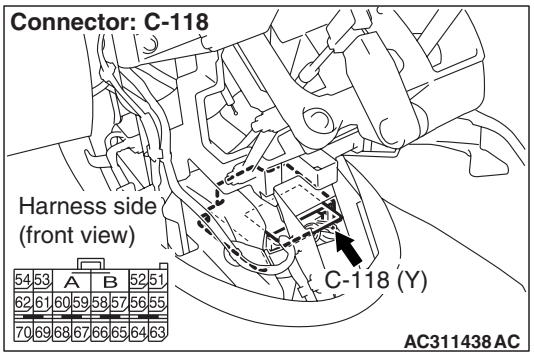

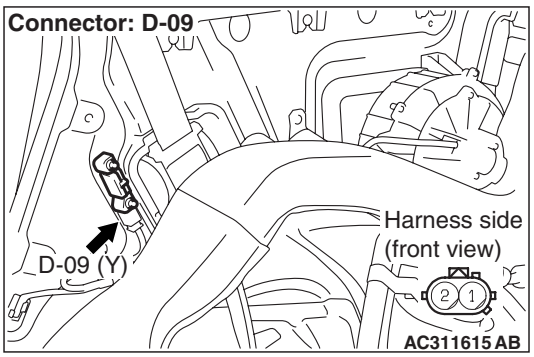

Q: Are the harness wires between SRS-ECU connector C-118 (terminal No.67 and 68) and side impact sensor (rear) (RH) connector D-09 (terminal No.1 and 2) in good condition?

YES : Go to Step 4.

NO : Replace the harness wires between SRS-ECU connector C-118 (terminal No.67 and 68) and side impact sensor (rear) (RH) connector D-09 (terminal No.1 and 2).

STEP 4. Check the side impact sensor (rear) (RH) (M.U.T.-III diagnosis code).

(1) Disconnect the negative battery terminal.
(2) Replace the side impact sensor (rear) (RH) with the side impact sensor (rear) (LH).
(3) Connect the negative battery terminal.
(4) Erase diagnosis code from memory, and check the diagnosis code.

Q: Is diagnosis code B1447 set?

YES : Replace the SRS-ECU (Refer to P.52B-332).

NO : Replace the side impact sensor (rear) (RH) with a new one (Refer to P.52B-347). Go to Step 5.

STEP 5. Check whether the diagnosis code is reset.

Q: Is diagnosis code B1447 set?

YES : Replace the SRS-ECU (Refer to P.52B-332).

NO : An intermittent malfunction is suspected (Refer to GROUP 00, How to Use Troubleshooting/Inspection Service Points P.00-5).

Main Index
Group TOC

Code No.B1448: Side Impact sensor (Rear) (RH) (Squib) for Power Supply Circuit
Code No.B1449: Side Impact sensor (Rear) (RH) (Squib) for Communication System

Side Impact Sensor (Rear) (RH) Circuit

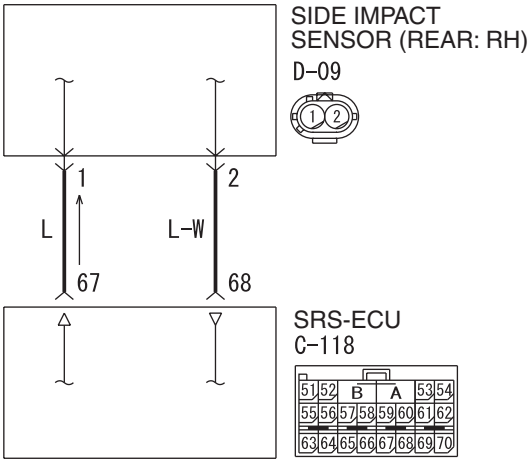

Wire colour code
B : Black LG : Light green G : Green L : Blue W : White Y : Yellow SB : Sky blue
BR : Brown O : Orange GR : Gray R : Red P : Pink V : Violet

W4X52X010A

⚠ CAUTION

If diagnosis code B1448 or B1449 is set in the SRS-ECU, always diagnose the CAN main bus line.

OPERATION

The side impact sensor includes an analogue G-sensor and CPU, etc. The CPU monitors the analogue G-sensor output signal. If the CPU judges that the curtain air bags should be deployed, it sends a fire signal to the SRS-ECU to deploy the curtain air bags. In addition, the CPU diagnoses the internal components of the side impact sensor. If a malfunction occurs, it requests the SRS-ECU to set a diagnosis code.

DIAGNOSIS CODE SET CONDITIONS

These diagnosis codes are set if communication between the side impact sensor (rear) (RH) and the SRS-ECU is not possible or communication is faulty.

PROBABLE CAUSES

- Damaged wiring harnesses or connectors
- Malfunction of the side impact sensor (rear) (RH)
- Malfunction of the SRS-ECU

DIAGNOSIS PROCEDURE

STEP 1. M.U.T.-III CAN bus diagnostics

Use the M.U.T.-III to diagnose the CAN bus lines.

Q: Is the check result normal?
YES : Go to Step 2.
NO : Repair the CAN bus line (Refer to GROUP 54F, Diagnosis P.54F-13).

STEP 2. Check whether the diagnosis code is reset.

Check again if the diagnosis code is set.
(1) Erase the diagnosis code.
(2) Ignition: "LOCK" (OFF) position to "ON"
(3) On completion, check that the diagnosis code is not reset.

Q: Is the diagnosis code set?
YES : Go to Step 3 .
NO : There is an intermittent malfunction such as poor engaged connector(s) or open circuit (Refer to GROUP 00, How to Cope with Intermittent Malfunction P.00-5).

Main Index
Group TOC

STEP 3.Check the side impact sensor (rear) (RH) (M.U.T.-III diagnosis code).

(1) Disconnect the negative battery terminal.
(2) Replace the side impact sensor (rear) (RH) with the side impact sensor (rear) (LH).
(3) Connect the negative battery terminal.
(4) Erase diagnosis code memory, and check the diagnosis code.

Q: Is diagnosis code B1458 or B1459 set?

YES : Replace the side impact sensor (rear) (RH) with a new one (Refer to P.52B-347). Then go to Step 5.

NO : Go to Step 4.

STEP 4. Check the harness wires for open circuit or short circuit between SRS-ECU connector C-118 (terminal No.67 and 68) and side impact sensor (rear) (RH) connector D-09 (terminal No.1 and 2).

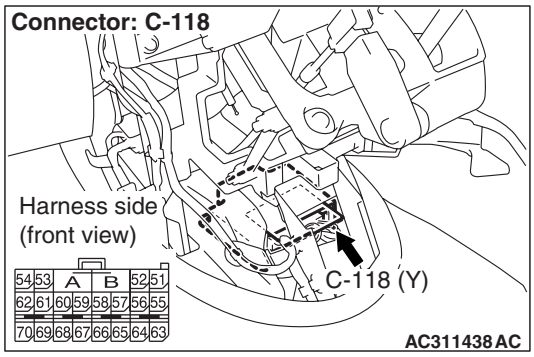

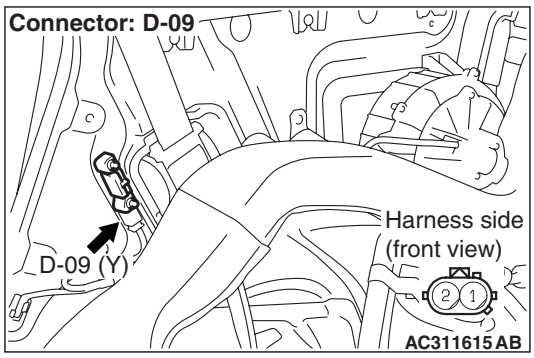

Q: Is the check result normal?

YES : Go to Step 5.

NO : Repair the harness wires between SRS-ECU connector C-118 (terminal No.67 and 68) and side impact sensor (rear) (RH) connector D-09 (terminal No.1 and 2).

STEP 5. Check whether the diagnosis code is reset.

Q: Is diagnosis code B1448 or B1449 set?

YES : Replace the SRS-ECU (Refer to P.52B-332).

NO : An intermittent malfunction is suspected (Refer to GROUP 00, How to Use Troubleshooting/Inspection Service Points P.00-5).

Main Index
Group TOC

Code No.B1450 Curtain air bag module (squib) (LH) system (short-circuited between terminals of the squib circuit)

Curtain Air Bag Module (Squib) (LH) Circuit

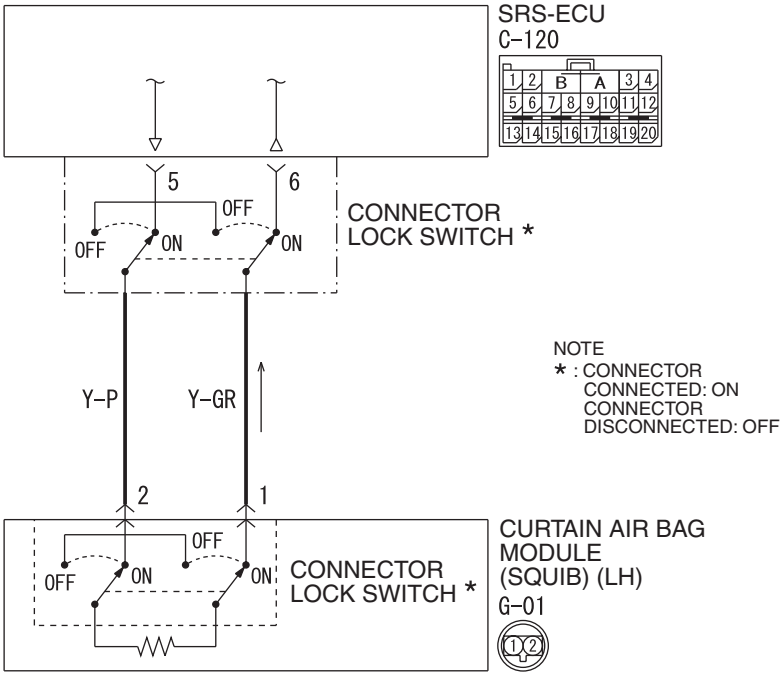

Wire colour code
B : Black LG : Light green G : Green L : Blue W : White Y : Yellow SB : Sky blue
BR : Brown O : Orange GR : Grey R : Red P : Pink V : Violet PU : Purple

W6X52X002A

⚠ CAUTION

If diagnosis code B1450 is set in the SRS-ECU, always diagnose the CAN bus lines.

OPERATION

The SRS-ECU judges how severe a collision is by detecting signals from the side impact sensors and the side-airbag safing G-sensor. If the impact is over a predetermined level, the SRS-ECU outputs an ignition signal. At this time, if the side air bag safing G-sensor is on, the curtain air bag module will deploy.

DIAGNOSIS CODE SET CONDITIONS

This diagnosis code is set if one curtain air bag module squib (LH) wire shorted to the other. However, if no diagnosis code resets, the SRS warning lamp will be switched off (diagnosis code will be retained).

PROBABLE CAUSES

- Improper engaged connector or defective short spring*
- Short circuit between the curtain air bag module (squib) (LH) circuit terminals
- Damaged connector(s)
- Malfunction of the SRS-ECU

*NOTE: *: The squib circuit connectors integrate a "short" spring (which prevents the air bag from deploying unintentionally due to static electricity by shorting the positive wire to the earth wire in the squib circuit when the connectors are disconnected). Therefore, if connector C-120 or G-01 is damaged or improperly engaged, the short spring may not be released when the connector is connected.*

Main Index
Group TOC

DIAGNOSIS PROCEDURE

STEP 1. M.U.T.-III CAN bus diagnostics

Use the M.U.T.-III to diagnose the CAN bus lines.

Q: Is the check result normal?

YES : . Go to Step 2.

NO : . Repair the CAN bus line (Refer to GROUP 54F, Diagnosis P.54F-13).

STEP 2. Check whether the diagnosis code is reset.

Check again if the diagnosis code is set.

(1) Erase the diagnosis code.
(2) Ignition: "LOCK" (OFF) position to "ON"
(3) On completion, check that the diagnosis code is not reset.

Q: Is the diagnosis code set?

YES : . Go to Step 3.

NO : . There is an intermittent malfunction such as poor engaged connector(s) or open circuit (Refer to GROUP 00, How to Cope with Intermittent Malfunction P.00-5).

STEP 3. M.U.T.-III diagnosis code

⚠ CAUTION

To prevent damage to M.U.T.-III, always turn the ignition switch to the "LOCK" (OFF) position before connecting or disconnecting M.U.T.-III.

(1) Turn the ignition switch to the "ON" position.
(2) Check if the diagnosis code is set.
(3) Turn the ignition switch to the "LOOK" (OFF) position.

Q: Is diagnosis code B1519 set?

YES : . Go to Step 4.

NO : . Go to Step 5.

STEP 4. Connector lock check: SRS-ECU connector C-120 (M.U.T.-III diagnosis code)

(1) Disconnect the negative battery terminal.

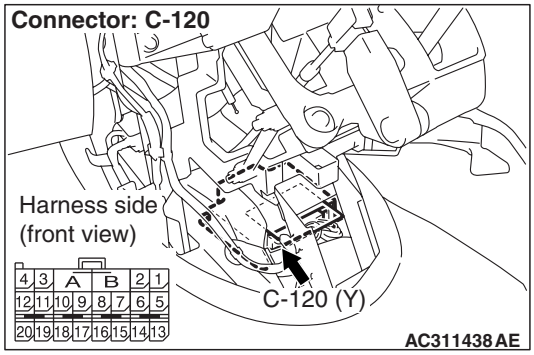

(2) Disconnect connectors C-120, and then reconnect them.
(3) Connector the negative battery terminal.
(4) Erase the diagnosis code memory, and check the diagnosis code.

Q: Is diagnosis code B1450 set?

YES : Go to Step 5.

NO : The procedure is complete. It is assumed that diagnosis code B1450 set as connector C-120 was engaged improperly.

STEP 5. STEP 5. Connector lock check: SRS-ECU connector C-120 and curtain air bag module (LH) connector G-01 (M.U.T.-III diagnosis code).

(1) Disconnect the negative battery terminal.

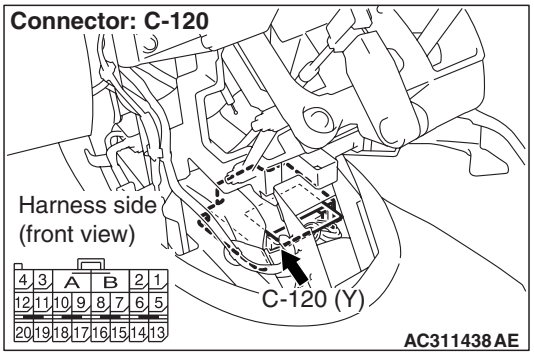

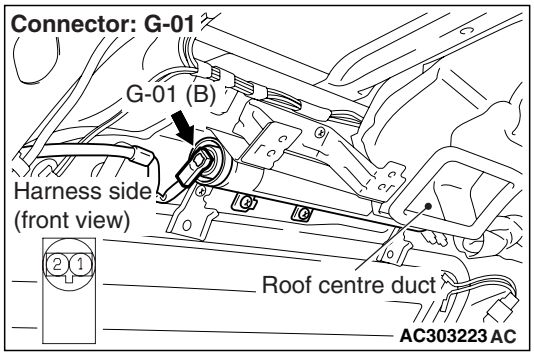

(2) Disconnect connectors C-120 and G-01, and then reconnect them. For connector G-01, use a flat-tipped screwdriver to pull out the locking button at the harness side connector, and then disconnect the connector.
(3) Connector the negative battery terminal.
(4) Erase the diagnosis code memory, and check the diagnosis code.

Q: Is diagnosis code B1450 set?

YES : Go to Step 6.

NO : The procedure is complete. It is assumed that diagnosis code B1450 set as connector C-120 or G-01 was engaged improperly.

STEP 6. Check the curtain air bag module (LH). (M.U.T.-III diagnosis code)

(1) Disconnect the negative battery terminal.

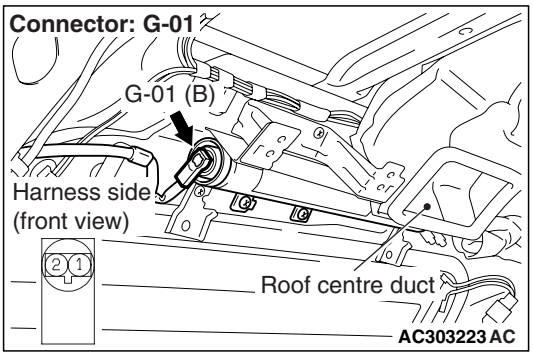

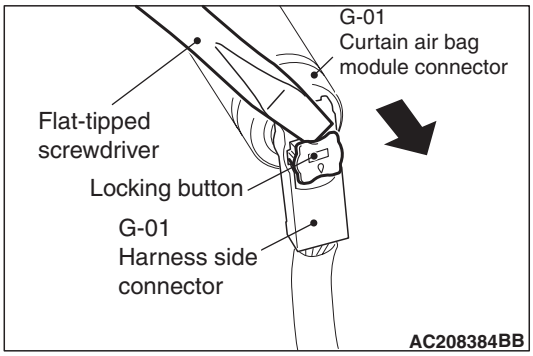

(2) Disconnect curtain air bag module (LH) connector G-01. Use a flat-tipped screwdriver to unlock the locking button at the harness side connector by withdrawing it toward you in two stages, and then disconnect the connector.

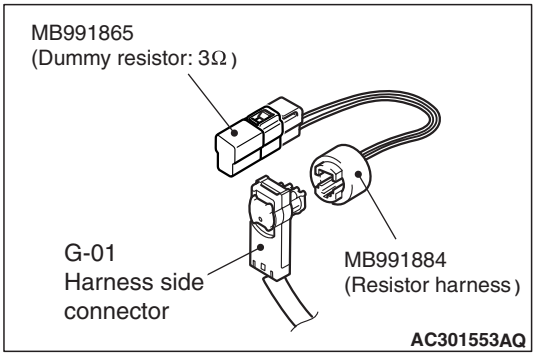

(3) Connect special tool dummy resistor (MB991865) to special tool resistor harness (MB991884).
(4) Connect special tool MB991884 to the G-01 harness side connector.
(5) Connect the negative battery terminal.
(6) Erase diagnosis code memory, and then check the diagnosis code.

Q: Is diagnosis code B1450 set?

YES : Go to Step 7.

NO : Replace the curtain air bag module (LH) (Refer to P.52B-342).

STEP 7. Check the curtain air bag module (LH) circuit. Resistance measurement at the SRS-ECU connector C-120.

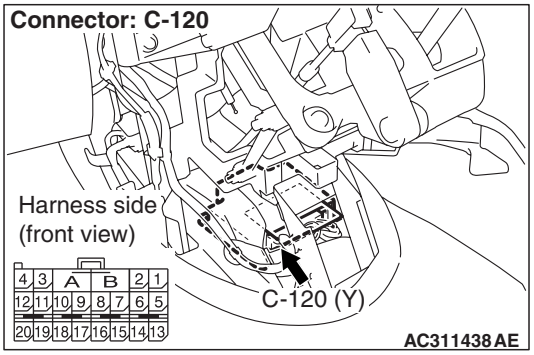

(1) Disconnect SRS-ECU connector C-120.

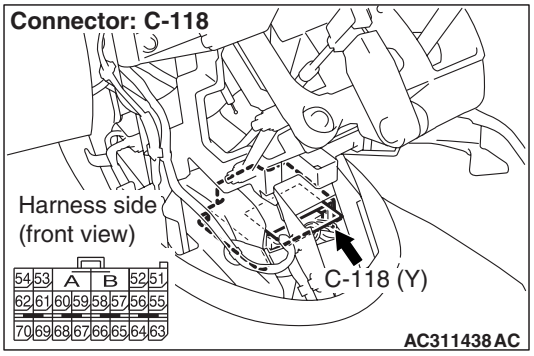

(2) Disconnect SRS-ECU connector C-118.

⚠ DANGER

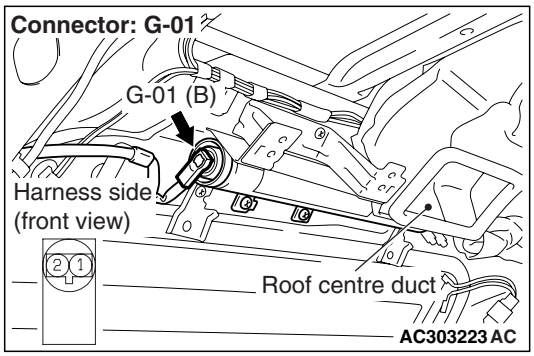

To prevents the air bag from deploying unintentionally, disconnect the curtain air bag module (LH) connector G-01 to short the squib circuit.

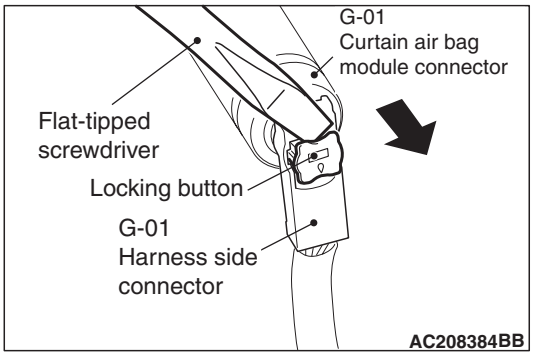

(3) Disconnect curtain air bag module (LH) connector G-01. Use a flat-tipped screwdriver to unlock the locking button at the harness side connector by withdrawing it toward you in two stages, and then disconnect the connector.

⚠ CAUTION

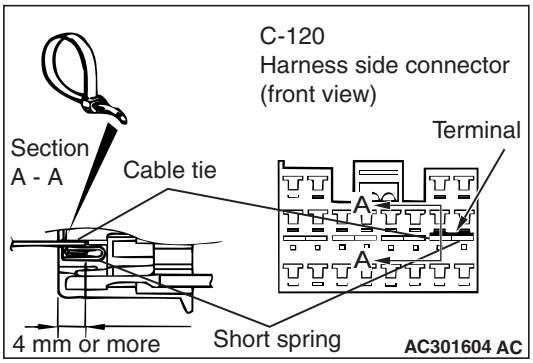

Insert an insulator such as a cable tie to a depth of 4mm or more, otherwise the short spring will not be released.

(4) Insert a cable tie [3 mm wide, 0.5 mm thick] between terminals 5, 6 and the short spring to release the short spring.

⚠ CAUTION

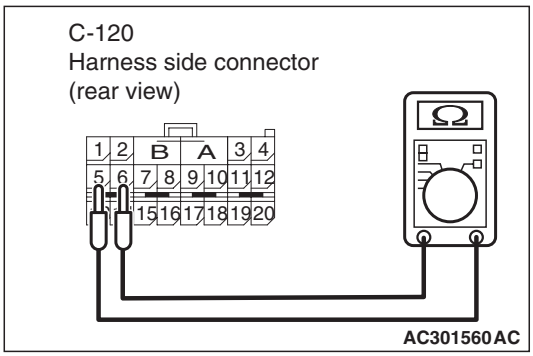

Do not insert a test probe into the terminal from its front side directly as the connector contact pressure may be weakened.

Main Index
Group TOC

(5) Resistance measurement between C-120 harness side connector terminals 5 and 6.

OK: Open circuit

Q: Is the check result normal?

YES : Go to Step 8.

NO : Repair the harness wire between SRS-ECU connector C-120 (terminal No.5 and 6) and intermediate connector G-22 (terminal No.1 and 2).

STEP 8. Check whether the diagnosis code is reset.

Q: Is diagnosis code B1450 set?

YES : Replace the SRS-ECU. (Refer toP.52B-332).

NO : The procedure is complete. If no malfunctions are found in all steps, an intermittent malfunction is suspected (Refer to GROUP 00, How to Use Troubleshooting/Inspection Service Points P.00-5).

Code No.B1451: Curtain air bag module (squib) (LH) system (open-circuited in the squib circuit)

Curtain Air Bag Module (Squib) (LH) Circuit

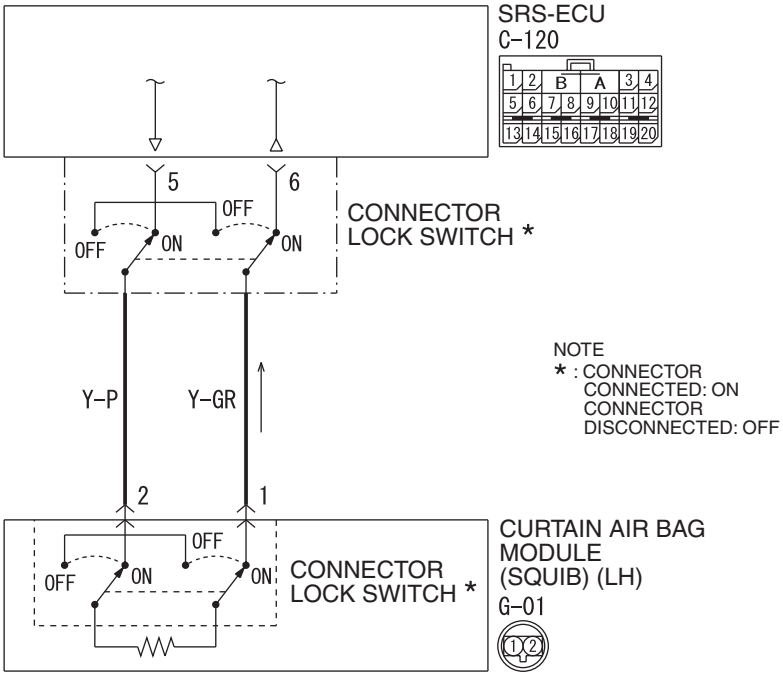

Wire colour code
B : Black LG : Light green G : Green L : Blue W : White Y : Yellow SB : Sky blue
BR : Brown O : Orange GR : Grey R : Red P : Pink V : Violet PU : Purple

W6X52X002A

⚠ CAUTION

If diagnosis code B1451 is set in the SRS-ECU, always diagnose the CAN main bus line.

OPERATION

The SRS-ECU judges how severe a collision is by detecting signals from the side impact sensors and the side air bag safing G-sensor. If the impact is over a predetermined level, the SRS-ECU outputs an ignition signal. At this time, if the side air bag safing G-sensor is on, the curtain air bag module will deploy.

DIAGNOSIS CODE SET CONDITIONS

This diagnosis code is set if curtain air bag module squib (LH) wire(s) are open-circuited. However, if no diagnosis code resets, the SRS warning lamp will be switched off (diagnosis code will be retained).

PROBABLE CAUSES

- Improper connector contact
- Open circuit in the curtain air bag module (squib) (LH) circuit
- Malfunction of the SRS-ECU

DIAGNOSIS PROCEDURE

STEP 1. M.U.T.-III CAN bus diagnostics

Use the M.U.T.-III to diagnose the CAN bus lines.

Q: Is the check result normal?

YES : Go to Step 2.

NO : Repair the CAN bus line (Refer to GROUP 54F, Diagnosis P.54F-13).

STEP 2. Check whether the diagnosis code is reset.

Check again if the diagnosis code is set.

(1) Erase the diagnosis code.
(2) Ignition: "LOCK" (OFF) position to "ON"
(3) On completion, check that the diagnosis code is not reset.

Q: Is the diagnosis code set?

YES : Go to Step 3.

NO : There is an intermittent malfunction such as poor engaged connector(s) or open circuit (Refer to GROUP 00, How to Cope with Intermittent Malfunction P.00-5).

STEP 3. Check the curtain air bag module (LH) (M.U.T.-III diagnosis code).

(1) Disconnect the negative battery terminal.

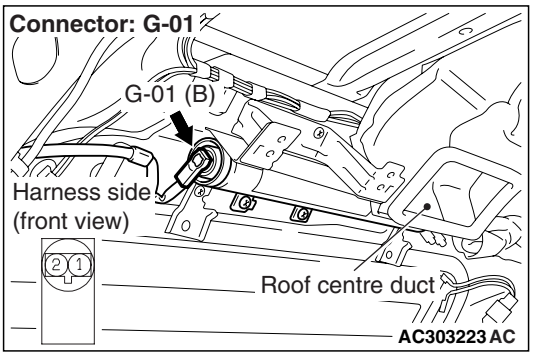

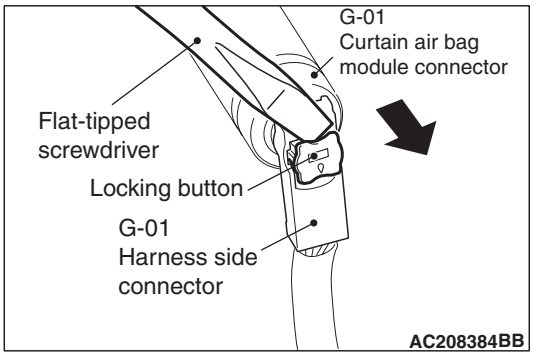

(2) Disconnect curtain air bag module (LH) connector G-01. Use a flat-tipped screwdriver to unlock the locking button at the harness side connector by withdrawing it toward you in two stages, and then disconnect the connector.

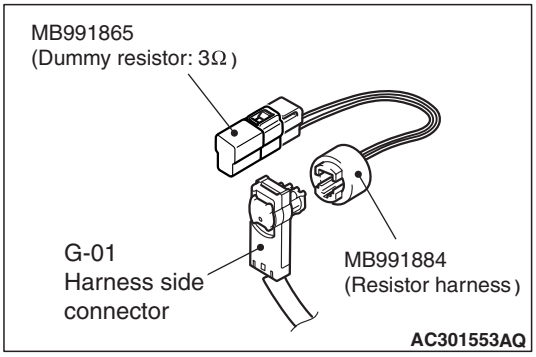

(3) Connect special tool dummy resistor (MB991865) to special tool resistor harness (MB991884).
(4) Connect special tool MB991884 to the G-01 harness side connector.
(5) Connect the negative battery terminal.
(6) Erase diagnosis code memory, and then check the diagnosis code.

Q: Is diagnosis code B1451 set?

YES : Go to Step 4.

NO : Replace the curtain air bag module (LH) (Refer to P.52B-342).

STEP 4. Resistance measurement between SRS-ECU connector C-120 (terminal No.5 and 6) and the curtain air bag module (LH) connector G-01 (terminal No.2 and 1)

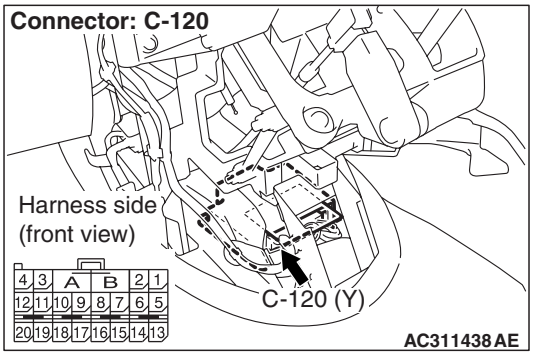

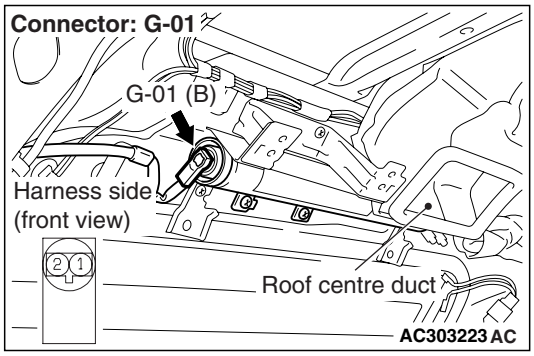

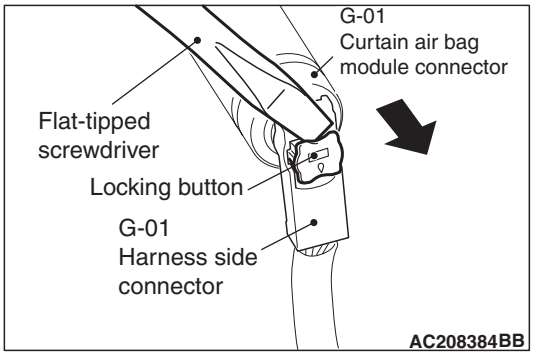

(1) Disconnect SRS-ECU connector C-120 and curtain air bag module (LH) connector G-01, and measure at the wiring harness side. For connector G-01, use a flat-tipped screwdriver to unlock the locking button at the harness side connector by withdrawing it toward you in two stages, and then disconnect the connector.

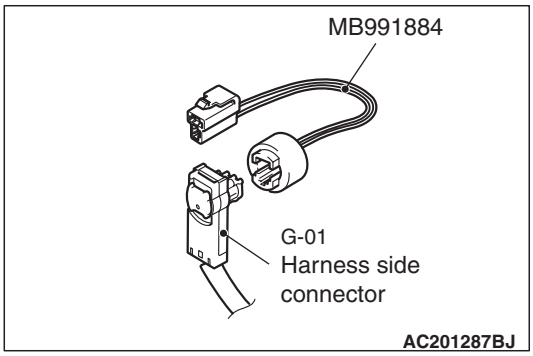

(2) Connect G-01 harness side connector to special tool resistor harness (MB991884).

⚠ CAUTION

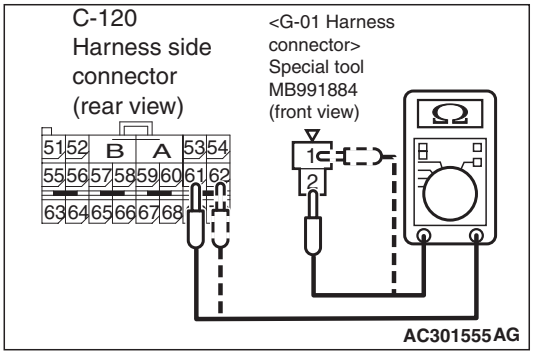

Do not insert a test probe into the terminal from its front side directly as the connector contact pressure may be weakened.

(3) Resistance measurement between the following terminals.
- SRS-ECU connector C-120 terminal No.5 and special tool terminal No.1
- SRS-ECU connector C-120 terminal No.6 and special tool terminal No.2

OK: Less than 2 Ω

Q: Are the check results normal?

YES : Go to Step 5.

NO : Repair the harness wire between SRS-ECU connector C-120 (terminal No.5 and 6) and curtain air bag module (LH) connector G-01 (terminal No.2 and 1).

STEP 5. Check whether the diagnosis code is reset.

Q: Is diagnosis code No.B1451 set?

YES : Replace the SRS-ECU (Refer to P.52B-332).

NO : An intermittent malfunction is suspected (Refer to GROUP 00, How to Use Troubleshooting/Inspection Service Points P.00-5).

Main Index
Group TOC

Code No.B1452: Curtain air bag module (squib) (LH) system (short-circuited to the earth)

Curtain Air Bag Module (Squib) (LH) Circuit

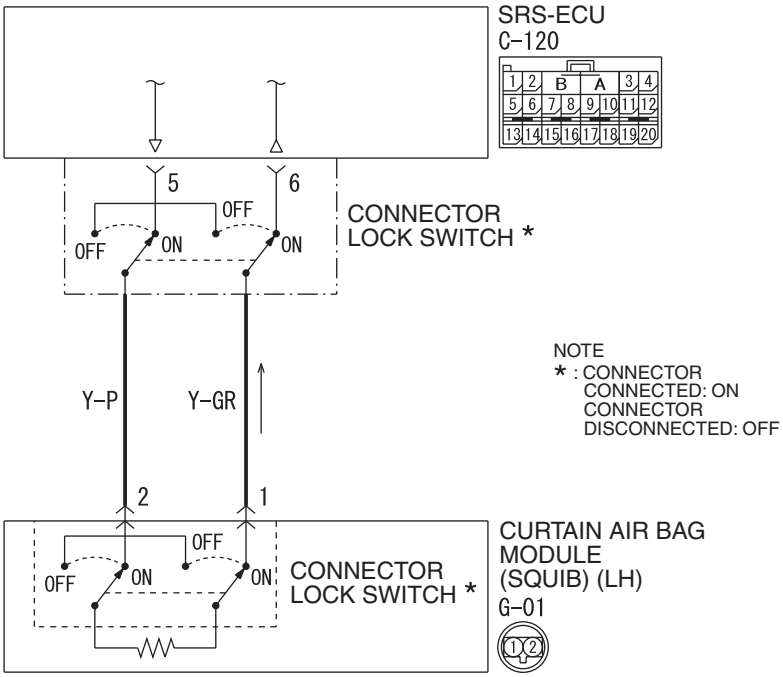

Wire colour code
B : Black LG : Light green G : Green L : Blue W : White Y : Yellow SB : Sky blue
BR : Brown O : Orange GR : Grey R : Red P : Pink V : Violet PU : Purple

W6X52X002A

⚠ CAUTION

If diagnosis code B1452 is set in the SRS-ECU, always diagnose the CAN main bus line.

OPERATION

The SRS-ECU judges how severe a collision is by detecting signals from the side impact sensors and the side air bag safing G-sensor. If the impact is over a predetermined level, the SRS-ECU outputs an ignition signal. At this time, if the side air bag safing G-sensor is on, the curtain air bag module will deploy.

DIAGNOSIS CODE SET CONDITIONS

This diagnosis code is set if the curtain air bag module squib (LH) wire(s) are short-circuited to the earth.

PROBABLE CAUSES

- Damaged wiring harnesses or connectors
- Short to the earth in the curtain air bag module (squib) (LH) harness
- Malfunction of the SRS-ECU

DIAGNOSTIC PROCEDURE

STEP 1. M.U.T.-III CAN bus diagnostics

Use the M.U.T.-III to diagnose the CAN bus lines.

Q: Is the check result normal?

YES : Go to Step 2.

NO : Repair the CAN bus line (Refer to GROUP 54F, Diagnosis P.54F-13).

STEP 2. Check whether the diagnosis code is reset.

Check again if the diagnosis code is set.

(1) Erase the diagnosis code.
(2) Ignition: "LOCK" (OFF) position to "ON"
(3) On completion, check that the diagnosis code is not reset.

Q: Is the diagnosis code set?

YES : Go to Step 3.

NO : There is an intermittent malfunction such as poor engaged connector(s) or open circuit (Refer to GROUP 00, How to Cope with Intermittent Malfunction P.00-5).

STEP 3. Check the curtain air bag module (LH) (M.U.T.-III diagnosis code).

(1) Disconnect the negative battery terminal.

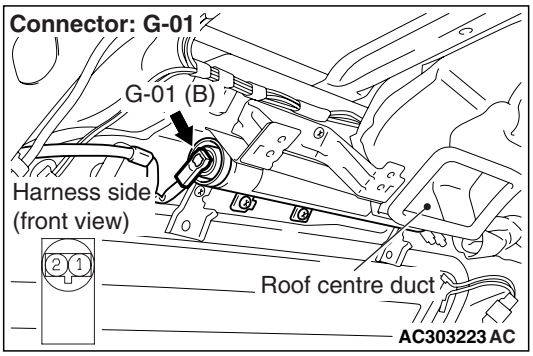

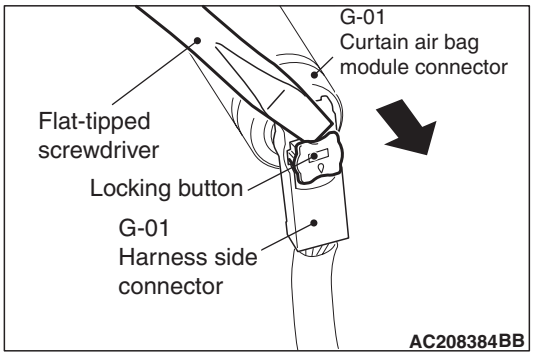

(2) Disconnect curtain air bag module connector G-01. Use a flat-tipped screwdriver to unlock the locking button at the harness side connector by withdrawing it toward you in two stages, and then disconnect the connector.

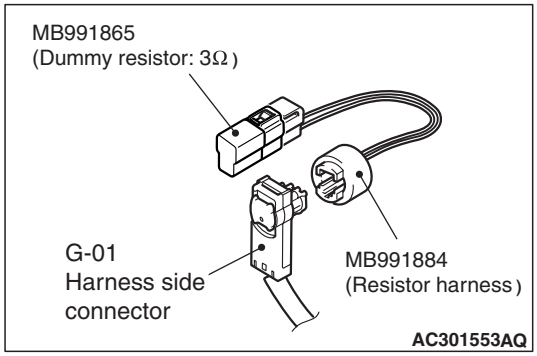

(3) Connect special tool dummy resistor (MB991865) to special tool resistor harness (MB991884).
(4) Connect special tool (MB991884) to the G-01 harness side connector.
(5) Connect the negative battery terminal.
(6) Erase diagnosis code memory, and check the diagnosis code.

Q: Is diagnosis code B1452 set?

YES : . Go to Step 4.

NO : . Replace the curtain air bag module (LH) (Refer to P.52B-342).

STEP 4. Check the curtain air bag module (LH) circuit. Resistance measurement at the SRS-ECU connector C-120.

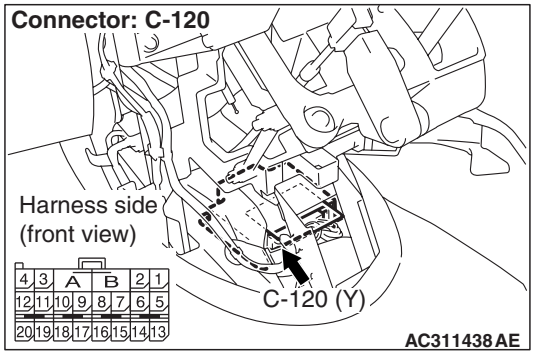

(1) Disconnect SRS-ECU connector C-120.

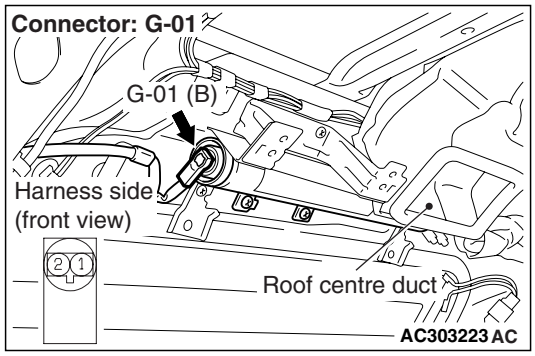

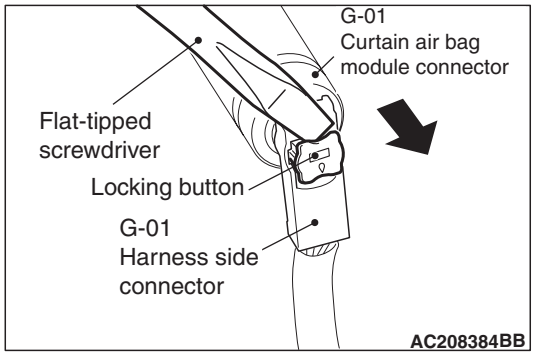

(2) Disconnect curtain air bag module connector G-01. Use a flat-tipped screwdriver to unlock the locking button at the harness side connector by withdrawing it toward you in two stages, and then disconnect the connector.

Main Index
Group TOC

⚠ CAUTION

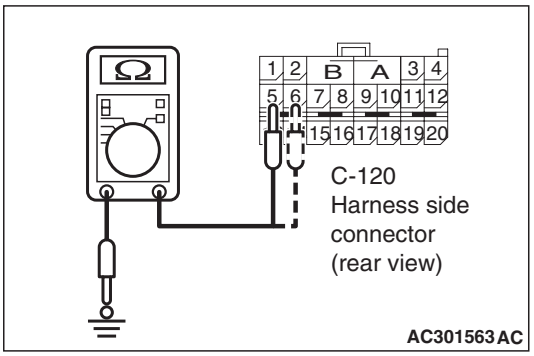

Do not insert a test probe into the terminal from its front side directly as the connector contact pressure may be weakened.

(3) Resistance measurement between C-120 harness side connector terminals 5, 6 and body earth.

OK: Open circuit

Q: Is the check result normal?

YES : Go to Step 5.

NO : Repair the harness wire between SRS-ECU connector C-120 (terminal No.5 and 6) and intermediate connector G-22 (floor harness side, terminal No.1 and 2).

STEP 5. Check whether the diagnosis code is reset.

Q: Is diagnosis code B1452 set?

YES : Replace the SRS-ECU (Refer to P.52B-332).

NO : An intermittent malfunction is suspected (Refer to GROUP 00, How to Use Troubleshooting/Inspection Service Points P.00-5).

Code No.B1453: Curtain air bag module (squib) (LH) system (short-circuited to the power supply)

Curtain Air Bag Module (Squib) (LH) Circuit

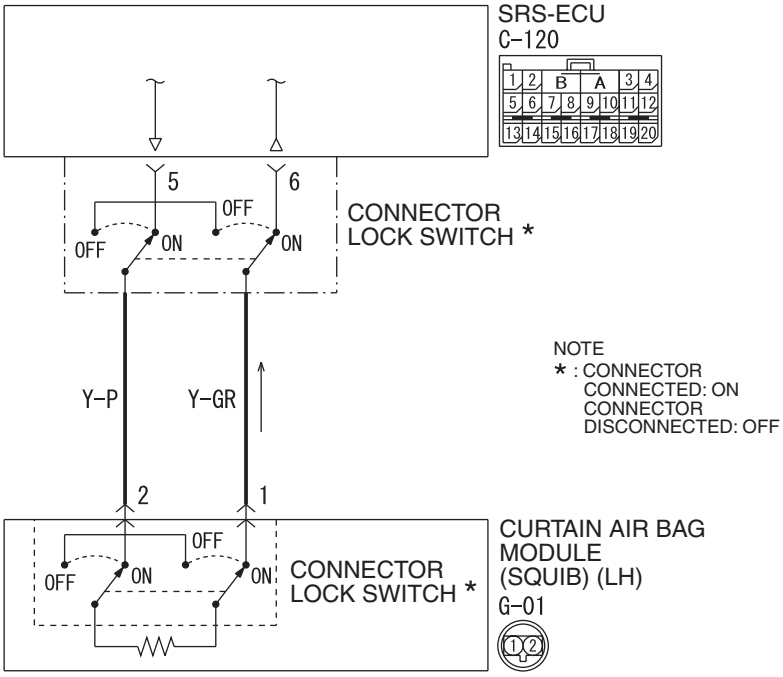

Wire colour code
B : Black LG : Light green G : Green L : Blue W : White Y : Yellow SB : Sky blue
BR : Brown O : Orange GR : Grey R : Red P : Pink V : Violet PU : Purple

W6X52X002A

⚠ CAUTION

If diagnosis code B1453 is set in the SRS-ECU, always diagnose the CAN main bus line.

OPERATION

The SRS-ECU judges how severe a collision is by detecting signals from the side impact sensors and the side air bag safing G-sensor. If the impact is over a predetermined level, the SRS-ECU outputs an ignition signal. At this time, if the side air bag safing G-sensor is on, the curtain air bag module will deploy.

DIAGNOSIS CODE SET CONDITIONS

This diagnosis code is set if the curtain air bag module squib (LH) wire(s) are short-circuited to the power supply.

PROBABLE CAUSES

- Damaged wiring harnesses or connectors
- Short to the power supply in the curtain air bag module (squib) (LH) harness
- Malfunction of the SRS-ECU

DIAGNOSIS PROCEDURE

STEP 1. M.U.T.-III CAN bus diagnostics

Use the M.U.T.-III to diagnose the CAN bus lines.

Q: Is the check result normal?

YES : Go to Step 2.

NO : Repair the CAN bus line (Refer to GROUP 54F, Diagnosis P.54F-13).

STEP 2. Check whether the diagnosis code is reset.

Check again if the diagnosis code is set.

(1) Erase the diagnosis code.
(2) Ignition: "LOCK" (OFF) position to "ON"
(3) On completion, check that the diagnosis code is not reset.

Q: Is the diagnosis code set?

YES : Go to Step 3.

NO : There is an intermittent malfunction such as poor engaged connector(s) or open circuit (Refer to GROUP 00, How to Cope with Intermittent Malfunction P.00-5).

STEP 3. Check the curtain air bag module (LH) (M.U.T.-III diagnosis code).

(1) Disconnect the negative battery terminal.

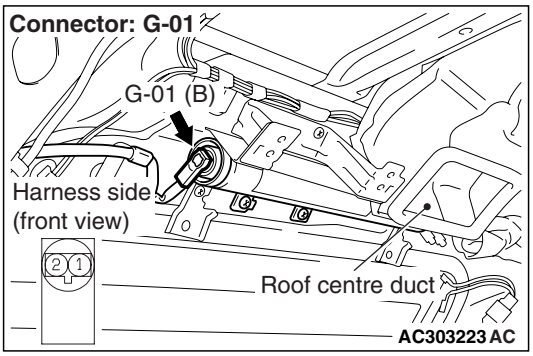

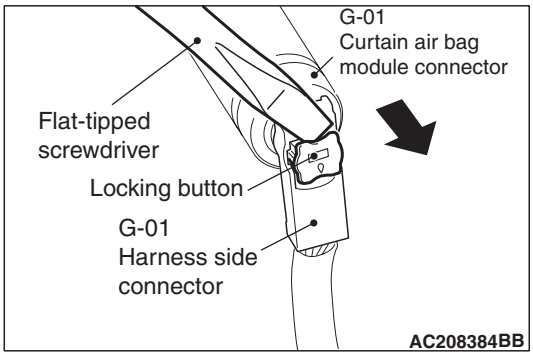

(2) Disconnect curtain air bag module (LH) connector G-01. Use a flat-tipped screwdriver to unlock the locking button at the harness side connector by withdrawing it toward you in two stages, and then disconnect the connector.

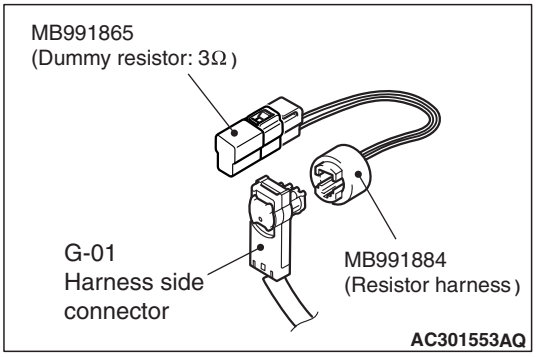

(3) Connect special tool dummy resistor (MB991865) to special tool resistor harness (MB991884).
(4) Connect special tool (MB991884) to the G-01 harness side connector.
(5) Connect the negative battery terminal.
(6) Erase diagnosis code memory, and check the diagnosis code.

Q: Is diagnosis code B1453 set?

YES : Go to Step 4.

NO : Replace the curtain air bag module (LH) (Refer to P.52B-342).

Main Index
Group TOC

STEP 4. Check the curtain air bag module circuit. Voltage measurement at the SRS-ECU connector C-120.

(1) Disconnect the negative battery terminal.

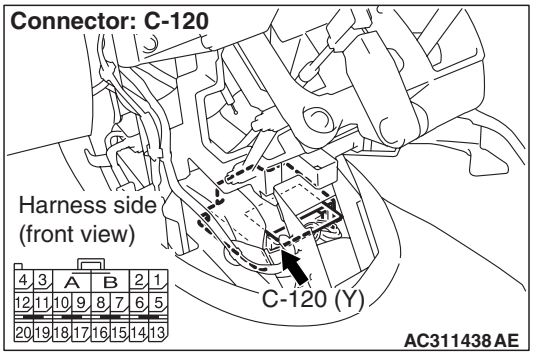

(2) Disconnect SRS-ECU connector C-120.

(3) Turn the ignition switch to the "ON" position.

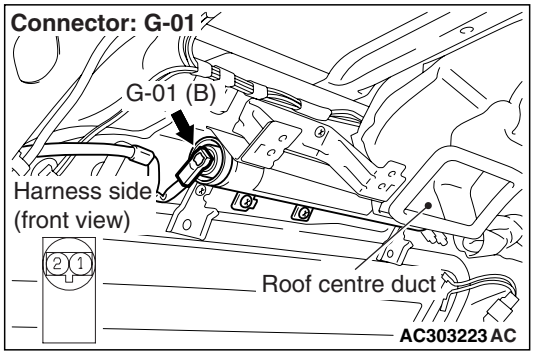

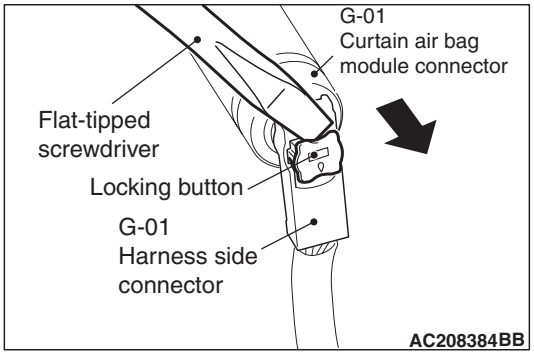

(4) Disconnect curtain air bag module (LH) connector G-01. Use a flat-tipped screwdriver to unlock the locking button at the harness side connector by withdrawing it toward you in two stages, and then disconnect the connector.

(5) Turn the ignition switch to the "ON" position.

⚠ CAUTION

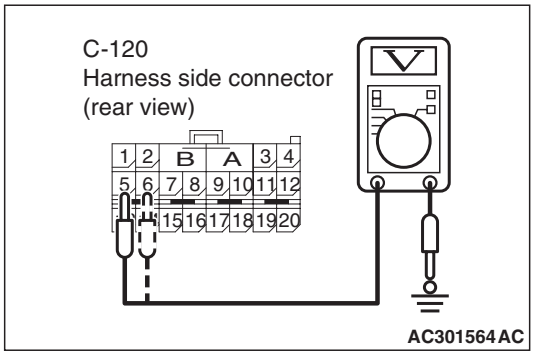

Do not insert a test probe into the terminal from its front side directly as the connector contact pressure may be weakened.

(6) Voltage measurement between C-120 harness side connector terminals 5, 6 and body earth.

OK: 0 V

Q: Is the measured voltage within the specified range?

YES : Go to Step 5.

NO : Repair the harness wire between SRS-ECU connector C-120 (terminal No.5 and 6) and the curtain air bag module (LH) connector G-01 (floor harness side, terminal No.2 and 1).

STEP 5. Check whether the diagnosis code is reset.

Q: Is diagnosis code B1453 set?

YES : Replace the SRS-ECU (Refer to P.52B-332).

NO : An intermittent malfunction is suspected (Refer to GROUP 00, How to Use Troubleshooting/Inspection Service Points P.00-5).

Main Index
Group TOC

Code No.B1457: Side Impact Sensor (Rear) (LH) Power Supply Circuit System

Side Impact Sensor (Rear) (LH) Circuit

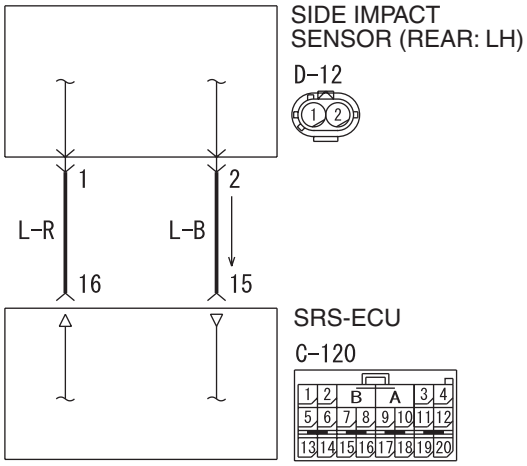

Wire colour code
B : Black LG : Light green G : Green L : Blue W : White Y : Yellow SB : Sky blue
BR : Brown O : Orange GR : Gray R : Red P : Pink V : Violet

W4X52E008A

⚠ CAUTION

If diagnosis code B1457 is set in the SRS-ECU, always diagnose the CAN main bus line.

OPERATION

The side impact sensor includes an analogue G-sensor and CPU, etc. The CPU monitors the analogue G-sensor output signal. If the CPU judges that the curtain air bags should be deployed, it sends a fire signal to the SRS-ECU to deploy the curtain air bags. In addition, the CPU diagnoses the internal components of the side impact sensor. If a malfunction occurs, it requests the SRS-ECU to set a diagnosis code.

DIAGNOSIS CODE SET CONDITIONS

This diagnosis code will set when the power supply voltage to the side impact sensor (rear) (LH) remains less than a predetermined value for five seconds. However, if the system returns to normal condition, code number B1457 will be erased automatically and the SRS warning lamp will go out.

PROBABLE CAUSES

- Damaged wiring harness or connectors
- Malfunction of the side impact sensor (rear) (LH)
- Malfunction of the SRS-ECU

DIAGNOSIS PROCEDURE

STEP 1. M.U.T.-III CAN bus diagnostics

Use the M.U.T.-III to diagnose the CAN bus lines.

Q: Is the check result normal?

YES : Go to Step 2.

NO : Repair the CAN bus line (Refer to GROUP 54F, Diagnosis P.54F-13).

STEP 2. Check whether the diagnosis code is reset.

Check again if the diagnosis code is set.

(1) Erase the diagnosis code.
(2) Ignition: "LOCK" (OFF) position to "ON"
(3) On completion, check that the diagnosis code is not reset.

Q: Is the diagnosis code set?

YES : Go to Step 3 .

NO : There is an intermittent malfunction such as poor engaged connector(s) or open circuit (Refer to GROUP 00, How to Cope with Intermittent Malfunction P.00-5).

Main Index
Group TOC

STEP 3. Check the harness wires for open circuit or short circuit between SRS-ECU connector C-120 (terminal No.15 and 16) and side impact sensor (rear) (LH) connector D-12 (terminal No.1 and 2).

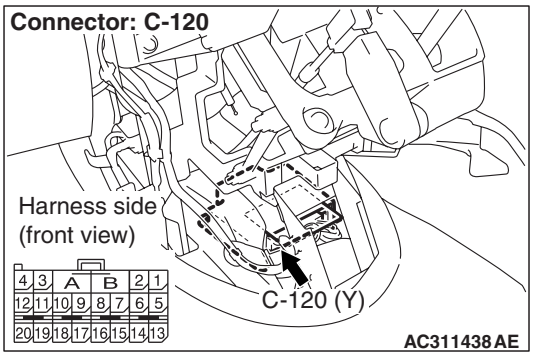

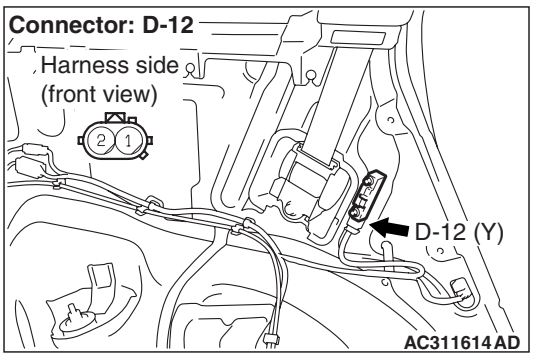

Q: Are the harness wires between SRS-ECU connector C-120 (terminal No.15 and 16) and side impact sensor (rear) (LH) connector D-12 (terminal No.1 and 2) in good condition?

YES : Go to Step 4.

NO : Replace the harness wires between SRS-ECU connector C-120 (terminal No.15 and 16) and side impact sensor (rear) (LH) connector D-12 (terminal No.1 and 2).

STEP 4. Check the side impact sensor (rear) (LH) (M.U.T.-III diagnosis code).

(1) Disconnect the negative battery terminal.
(2) Replace the side impact sensor (rear) (LH) with the side impact sensor (rear) (RH).
(3) Connect the negative battery terminal.
(4) Erase diagnosis code from memory, and check the diagnosis code.

Q: Is diagnosis code B1457 set?

YES : Replace the SRS-ECU (Refer to P.52B-332).

NO : Replace the side impact sensor (rear) (LH) with a new one (Refer to P.52B-347). Go to Step 5.

STEP 5. Check whether the diagnosis code is reset.

Q: Is diagnosis code B1457 set?

YES : Replace the SRS-ECU (Refer to P.52B-332).

NO : An intermittent malfunction is suspected (Refer to GROUP 00, How to Use Troubleshooting/Inspection Service Points P.00-5).

Main Index
Group TOC

Code No.B1458: Side Impact sensor (Rear) (LH) (Squib) for Power Supply Circuit
Code No.B1459: Side Impact sensor (Rear) (LH) (Squib) or Communication System

Side Impact Sensor (Rear) (LH) Circuit

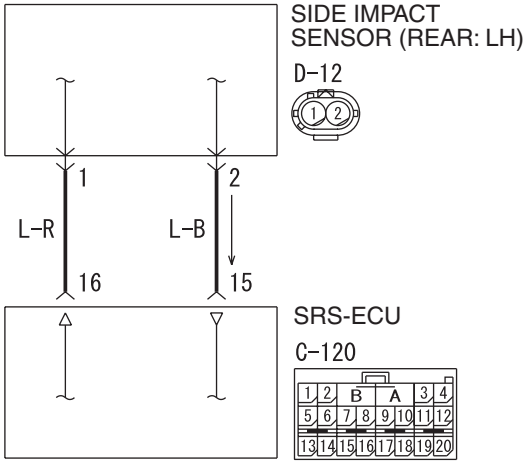

Wire colour code
B : Black LG : Light green G : Green L : Blue W : White Y : Yellow SB : Sky blue
BR : Brown O : Orange GR : Gray R : Red P : Pink V : Violet

W4X52E008A

⚠ CAUTION
If diagnosis code B1458 or B1459 is set in the SRS-ECU, always diagnose the CAN main bus line.

OPERATION
The side impact sensor includes an analogue G-sensor and CPU, etc. The CPU monitors the analogue G-sensor output signal. If the CPU judges that the curtain air bags should be deployed, it sends a fire signal to the SRS-ECU to deploy the curtain air bags. In addition, the CPU diagnoses the internal components of the side impact sensor. If a malfunction occurs, it requests the SRS-ECU to set a diagnosis code.

DIAGNOSIS CODE SET CONDITIONS
These diagnosis codes are set if communication between the side impact sensor (rear) (LH) and the SRS-ECU is not possible or communication is faulty.

PROBABLE CAUSES
- Damaged wiring harnesses or connectors
- Malfunction of the side impact sensor (rear) (LH)
- Malfunction of the SRS-ECU

DIAGNOSIS PROCEDURE

STEP 1. M.U.T.-III CAN bus diagnostics
Use the M.U.T.-III to diagnose the CAN bus lines.

Q: Is the check result normal?
YES : Go to Step 2.
NO : Repair the CAN bus line (Refer to GROUP 54F, Diagnosis P.54F-13).

STEP 2. Check whether the diagnosis code is reset.
Check again if the diagnosis code is set.
(1) Erase the diagnosis code.
(2) Ignition: "LOCK" (OFF) position to "ON"
(3) On completion, check that the diagnosis code is not reset.

Q: Is the diagnosis code set?
YES : Go to Step 3 .
NO : There is an intermittent malfunction such as poor engaged connector(s) or open circuit (Refer to GROUP 00, How to Cope with Intermittent Malfunction P.00-5).

Main Index
Group TOC

STEP 3.Check the side impact sensor (rear) (LH) (M.U.T.-III diagnosis code).

(1) Disconnect the negative battery terminal.
(2) Replace the side impact sensor (rear) (LH) with the side impact sensor (rear) (RH).
(3) Connect the negative battery terminal.
(4) Erase diagnosis code memory, and check the diagnosis code.

Q: Is diagnosis code B1458 or B1459 set?

YES : Replace the side impact sensor (rear) (LH) with a new one (Refer to P.52B-347). Then go to Step 5.

NO : Go to Step 4.

STEP 4. Check the harness wires for open circuit or short circuit between SRS-ECU connector C-120 (terminal No.15 and 16) and side impact sensor (rear) (LH) connector D-12 (terminal No.2 and 1).

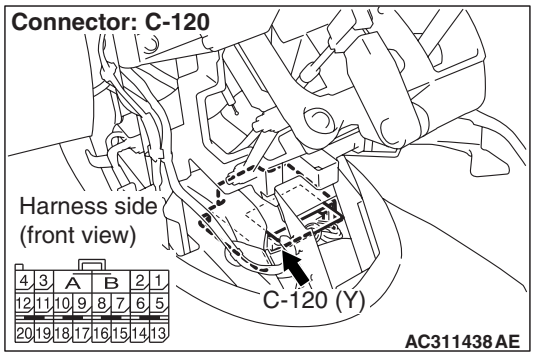

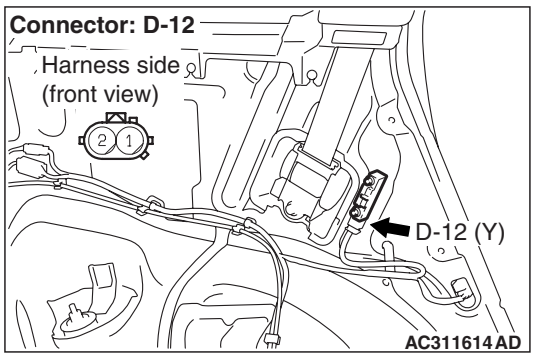

Q: Is the check result normal?

YES : Go to Step 5.

NO : Repair the harness wires between SRS-ECU connector C-120 (terminal No.15 and 16) and side impact sensor (rear) (LH) connector D-12 (terminal No.2 and 1).

STEP 5. Check whether the diagnosis code is reset.

Q: Is diagnosis code B1458 or B1459 set?

YES : Replace the SRS-ECU (Refer to P.52B-332).

NO : An intermittent malfunction is suspected (Refer to GROUP 00, How to Use Troubleshooting/Inspection Service Points P.00-5).

Main Index
Group TOC

Code No.B1460: Seat Belt Pre-Tensioner (RH) (Squib) System Fault 1 (Short Circuit between Terminals of the Squib Circuit)

Seat Belt Pre-Tensioner (RH) (Squib) Circuit

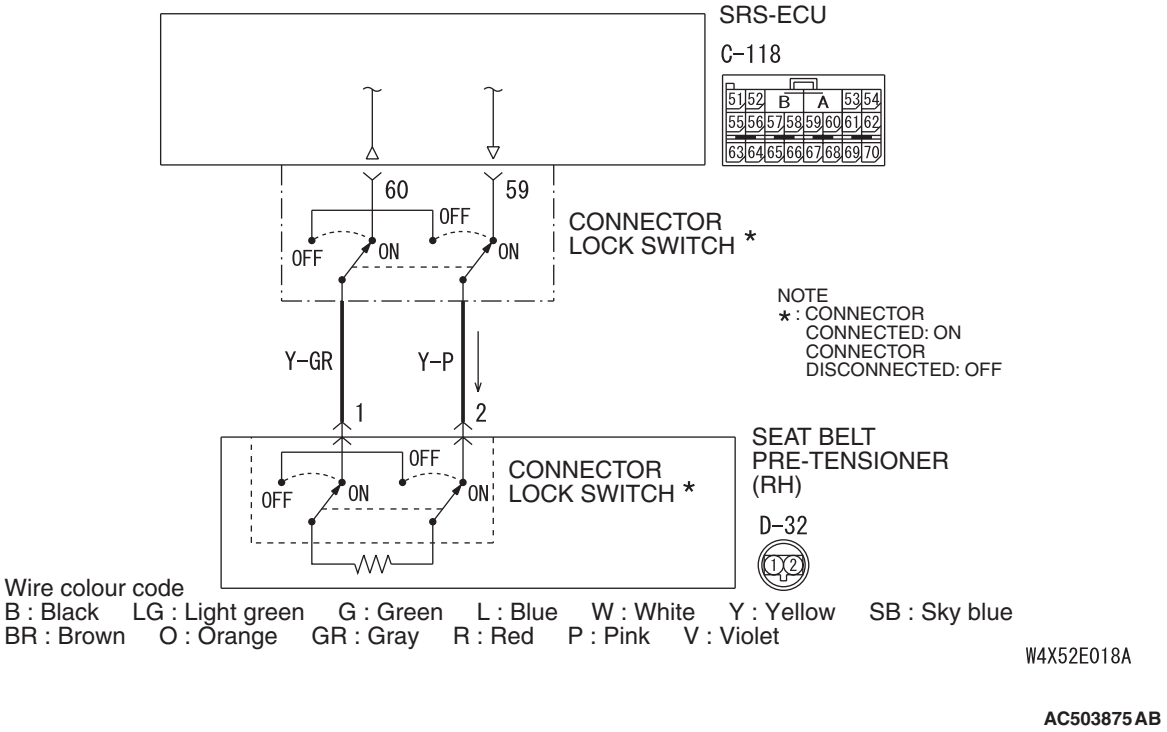

AC503875AB

⚠ CAUTION

If diagnosis code B1460 is set in the SRS-ECU, always diagnose the CAN main bus line.

OPERATION

The SRS-ECU judges how severe a collision is by detecting signals from the front impact sensors and the front air bag analogue G-sensor. If the impact is over a predetermined level, the SRS-ECU sends an ignition signal. At this time, if the front air bag safing G-sensor is on, the pre-tensioner will deploy.

DIAGNOSIS CODE SET CONDITIONS

This diagnosis code is set if there is abnormal resistance between the input terminals of the seat belt pre-tensioner (RH) (squib).

PROBABLE CAUSES

- Improper engaged connector or defective short spring*
- Short circuit between the seat belt pre-tensioner (RH) (squib) circuit terminals
- Damaged connector(s)
- Malfunction of the SRS-ECU

*NOTE: *: The squib circuit connectors integrate a "short" spring (which prevents the seat belt pre-tensioner from deploying unintentionally due to static electricity by shorting the positive wire to the earth wire in the squib circuit when the connectors are disconnected) (Refer to P.52B-3). Therefore, if connector C-118 or D-32 is damaged or improperly engaged, the short spring may not be released when the connector is connected.*

Main Index
Group TOC

DIAGNOSIS PROCEDURE

STEP 1. M.U.T.-III CAN bus diagnostics

Use the M.U.T.-III to diagnose the CAN bus lines.

Q: Is the check result normal?

YES : Go to Step 2.

NO : Repair the CAN bus line (Refer to GROUP 54F, Diagnosis P.54F-13).

STEP 2. Check whether the diagnosis code is reset.

Check again if the diagnosis code is set.

(1) Erase the diagnosis code.

(2) Ignition: "LOCK" (OFF) position to "ON"

(3) On completion, check that the diagnosis code is not reset.

Q: Is the diagnosis code set?

YES : Go to Step 3 .

NO : There is an intermittent malfunction such as poor engaged connector(s) or open circuit (Refer to GROUP 00, How to Cope with Intermittent Malfunction P.00-5).

STEP 3. M.U.T.-III diagnosis code

⚠ CAUTION

To prevent damage to scan tool MB991958, always turn the ignition switch to the "LOCK" (OFF) position before connecting or disconnecting scan tool MB991958.

(1) Turn the ignition switch to the "ON" position.

(2) Check if the diagnosis code is set.

(3) Turn the ignition switch to the "LOOK (OFF)" position.

Q: Is diagnosis code B1519 set?

YES : Go to Step 4.

NO : Go to Step 5.

STEP 4. Connector lock check: SRS-ECU connector C-118 (M.U.T.-III diagnosis code)

(1) Disconnect the negative battery terminal.

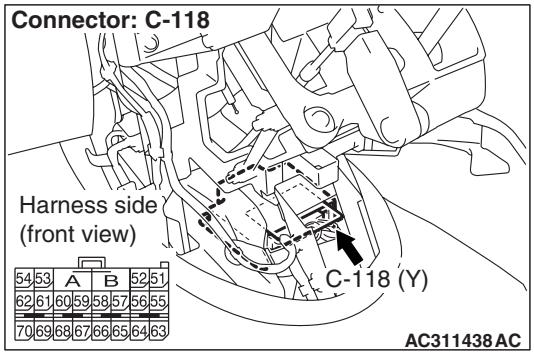

(2) Disconnect the connectors C-118 and then reconnect them.

(3) Connector the negative battery terminal.

(4) Erase the diagnosis code memory, and check the diagnosis code.

Q: Is diagnosis code B1460 set?

YES : Go to Step 5.

NO : The procedure is complete. It is assumed that diagnosis code B1460 set as connector C-118 was engaged improperly.

STEP 5. Connector lock check: SRS-ECU connector C-118 and seat belt pre-tensioner (RH) connector D-32 (M.U.T.-III diagnosis code)

(1) Disconnect the negative battery terminal.

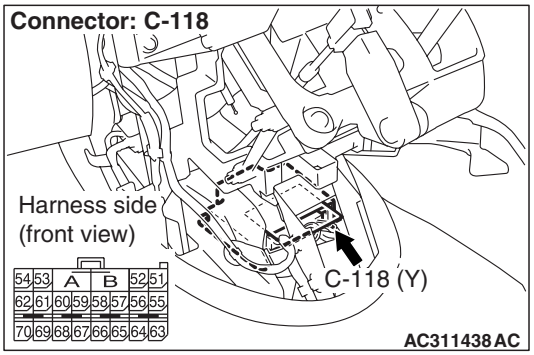

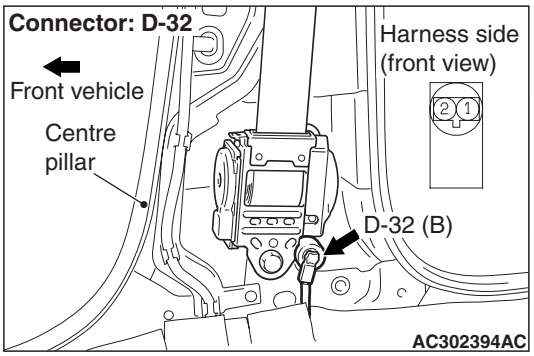

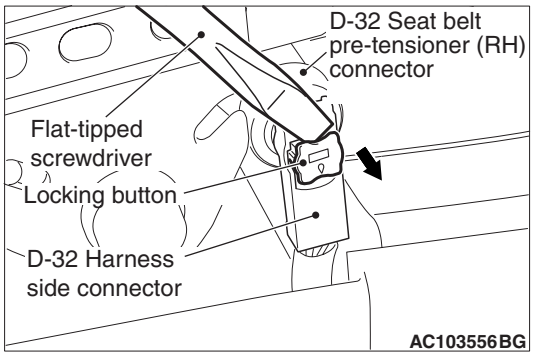

(2) Disconnect connectors C-118 and D-32, and then reconnect them. For connector D-32, use a flat-tipped screwdriver to unlock the locking button at the harness side connector by withdrawing it toward you in two stages, and then disconnect the connector.
(3) Connector the negative battery terminal.
(4) Erase the diagnosis code memory, and check the diagnosis code.

Q: Is diagnosis code B1460 set?
YES : Go to Step 6.
NO : The procedure is complete. It is assumed that diagnosis code B1460 set as connector C-118 or D-32 was engaged improperly.

STEP 6. Check the seat belt pre-tensioner (RH) (M.U.T.-III diagnosis code).

(1) Disconnect the negative battery terminal.

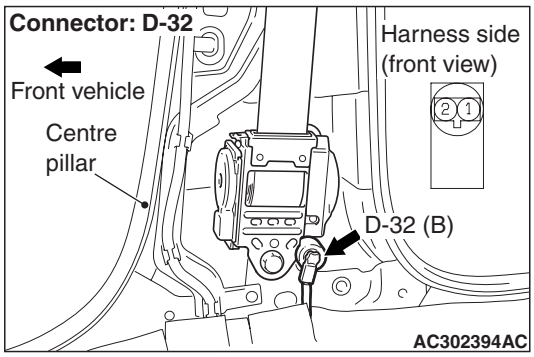

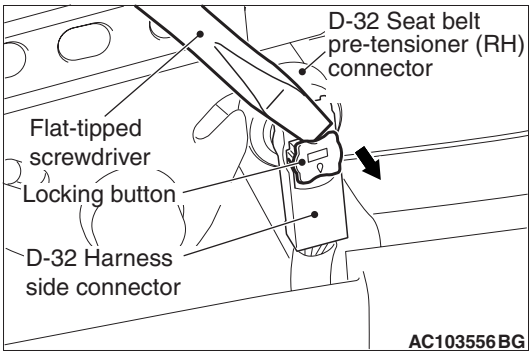

(2) Disconnect seat belt pre-tensioner (RH) connector D-32. Use a flat-tipped screwdriver to unlock the locking button at the harness side connector by withdrawing it toward you in two stages, and then disconnect the connector.

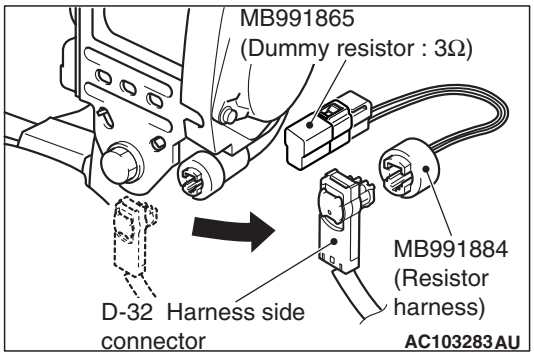

(3) Connect special tool dummy resistor (MB991865) to special tool resistor harness (MB991884).
(4) Connect special tool MB991884 to the D-32 harness side connector.
(5) Connect the negative battery terminal.
(6) Erase diagnosis code memory, and then check the diagnosis code.

Q: Is diagnosis code B1460 set?
YES : Go to Step 7.
NO : Replace the seat belt pre-tensioner (RH) (Refer to P.52B-350). Then go to Step 8.

STEP 7. Check the seat belt pre-tensioner (RH) circuit. Resistance measurement at the SRS-ECU connector C-118.

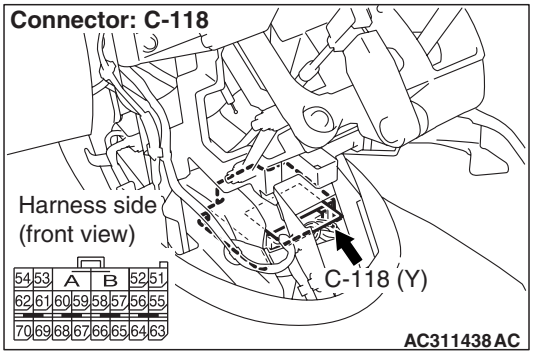

(1) Disconnect SRS-ECU connector C-118.

⚠ DANGER

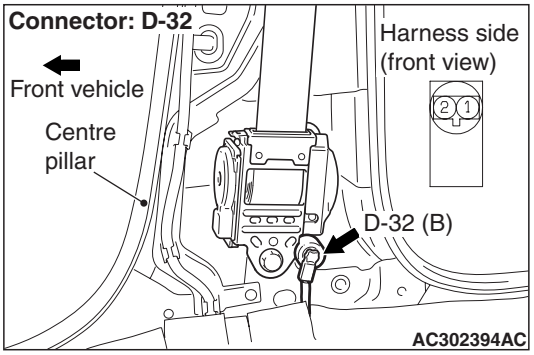

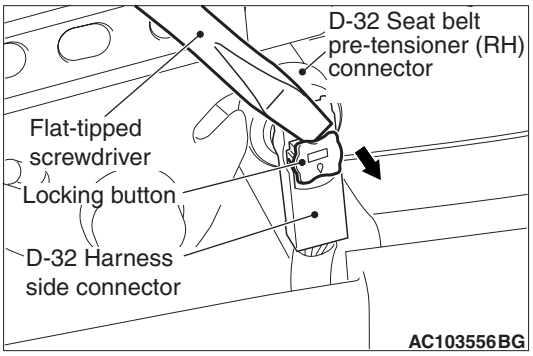

To prevent the seat belt pre-tensioner from deploying unintentionally, disconnect the seat belt pre-tensioner (RH) connector D-32 to short the squib circuit.

(2) Disconnect seat belt pre-tensioner (RH) connector D-32. Use a flat-tipped screwdriver to unlock the locking button at the harness side connector by withdrawing it toward you in two stages, and then disconnect the connector.

⚠ CAUTION

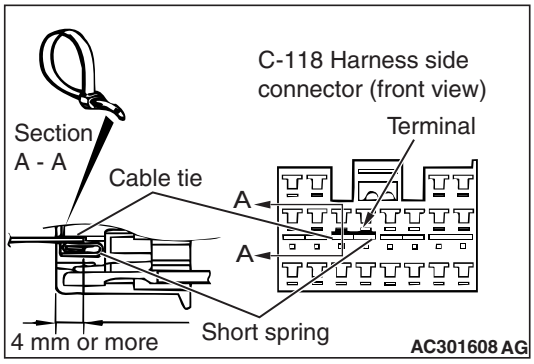

Insert an insulator such as a cable tie to a depth of 4mm or more, otherwise the short spring will not be released.

(3) Insert a cable tie [3 mm wide, 0.5 mm thick] between terminals 59, 60 and the short spring to release the short spring.

⚠ CAUTION

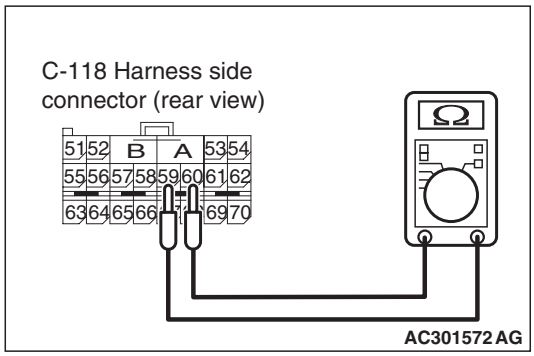

Do not insert a test probe into the terminal from its front side directly as the connector contact pressure may be weakened.

(4) Check for continuity between C-118 harness side connector terminals 59 and 60.

OK: Open circuit.

Q: Is the check result normal?

YES : Go to Step 8.

NO : Repair the harness wires between SRS-ECU connector C-118 (terminal No.59 and 60) and seat belt pre-tensioner (RH) connector D-32 (terminal No.1 and 2).

STEP 8. Check whether the diagnosis code is reset.

Q: Is diagnosis code B1460 set?

YES : Replace the SRS-ECU (Refer toP.52B-332).

NO : An intermittent malfunction is suspected (Refer to GROUP 00, How to Use Troubleshooting/Inspection Service Points P.00-5).

Main Index
Group TOC

Code No.B1461: Seat Belt Pre-Tensioner (RH) (Squib) System Fault 2 (Open in the Squib Circuit)

Seat Belt Pre-Tensioner (RH) (Squib) Circuit

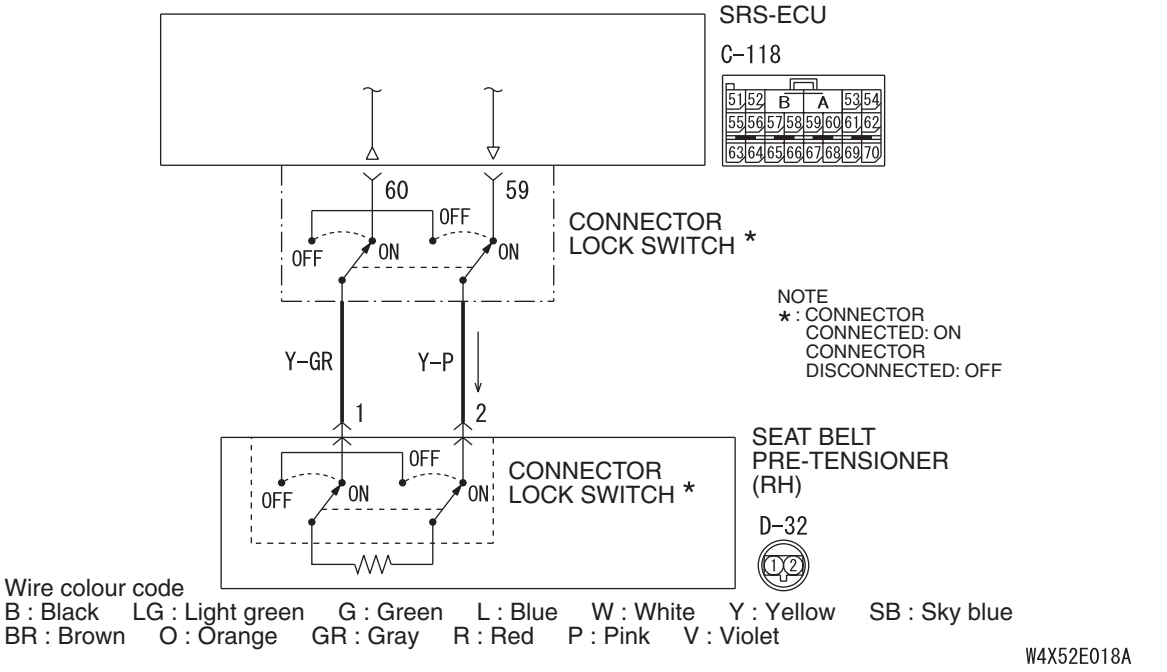

AC503875AB

⚠ CAUTION

If diagnosis code B1461 is set in the SRS-ECU, always diagnose the CAN main bus line.

OPERATION

The SRS-ECU judges how severe a collision is by detecting signals from the front impact sensors and the front air bag analogue G-sensor. If the impact is over a predetermined level, the SRS-ECU sends an ignition signal. At this time, if the front air bag safing G-sensor is on, the pre-tensioner will deploy.

DIAGNOSIS CODE SET CONDITIONS

This diagnosis code is set if there is abnormal resistance between the input terminals of the seat belt pre-tensioner (RH) (squib).

PROBABLE CAUSES

- Open circuit in the seat belt pre-tensioner (RH) (squib) circuit
- Improper connector contact
- Malfunction of the SRS-ECU

DIAGNOSIS PROCEDURE

STEP 1. M.U.T.-III CAN bus diagnostics

Use the M.U.T.-III to diagnose the CAN bus lines.

Q: Is the check result normal?

YES : Go to Step 2.

NO : Repair the CAN bus line (Refer to GROUP 54F, Diagnosis P.54F-13).

STEP 2. Check whether the diagnosis code is reset.

Check again if the diagnosis code is set.

(1) Erase the diagnosis code.
(2) Ignition: "LOCK" (OFF) position to "ON"
(3) On completion, check that the diagnosis code is not reset.

Q: Is the diagnosis code set?

YES : Go to Step 3 .

NO : There is an intermittent malfunction such as poor engaged connector(s) or open circuit (Refer to GROUP 00, How to Cope with Intermittent Malfunction P.00-5).

STEP 3. Check the seat belt pre-tensioner (RH) (M.U.T.-III diagnosis code).

(1) Disconnect the negative battery terminal.

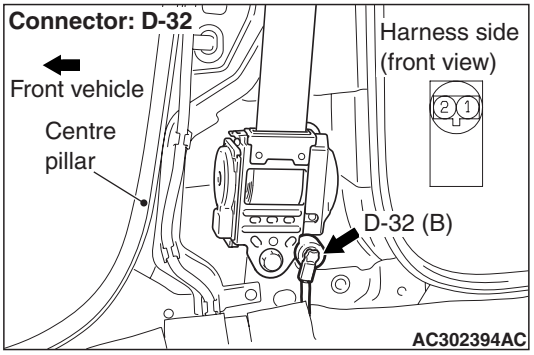

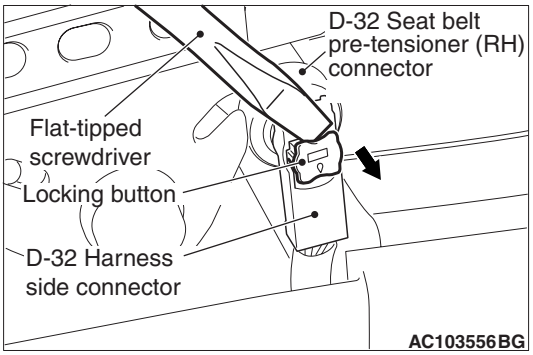

(2) Disconnect seat belt pre-tensioner connector (RH) D-32. Use a flat-tipped screwdriver to unlock the locking button at the harness side connector by withdrawing it toward you in two stages, and then disconnect the connector.

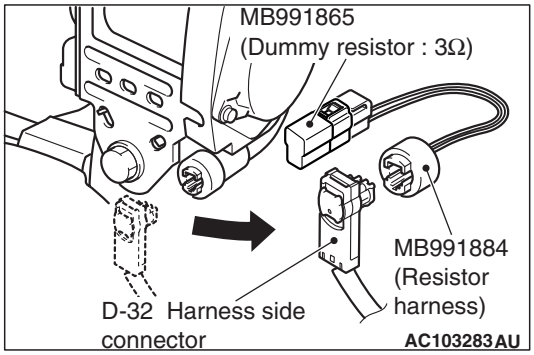

(3) Connect special tool dummy resistor (MB991865) to special tool resistor harness (MB991884).
(4) Connect special tool MB991884 to the D-32 harness side connector.
(5) Connect the negative battery terminal.
(6) Erase diagnosis code memory, and then check the diagnosis code.

Q: Is diagnosis code B1461 set?

YES : Go to Step 4.

NO : Replace the seat belt pre-tensioner (RH) (Refer to P.52B-350).

STEP 4. Resistance measurement between SRS-ECU connector C-118 (terminal No.59 and 60) and the seat belt pre-tensioner (RH) connector D-32 (terminal No.2 and 1).

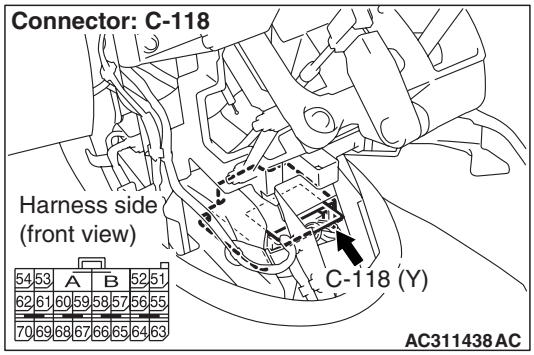

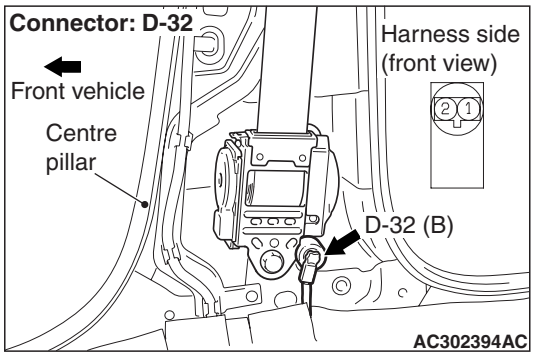

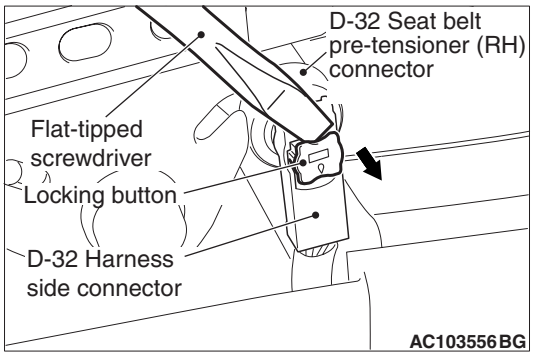

(1) Disconnect SRS-ECU connector C-118 and seat belt pre-tensioner (RH) connector D-32. For connector D-32, use a flat-tipped screwdriver to unlock the locking button at the harness side connector by withdrawing it toward you in two stages, and then disconnect the connector.

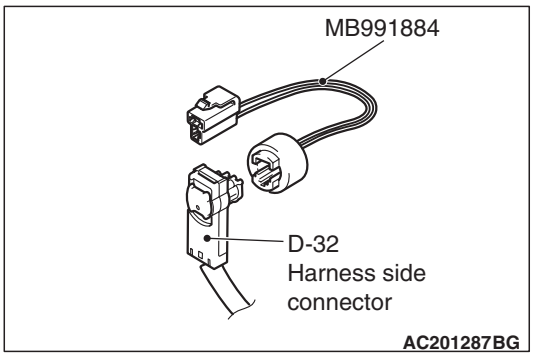

(2) Connect D-32 harness side connector to special tool resistor harness (MB991884).

⚠ CAUTION

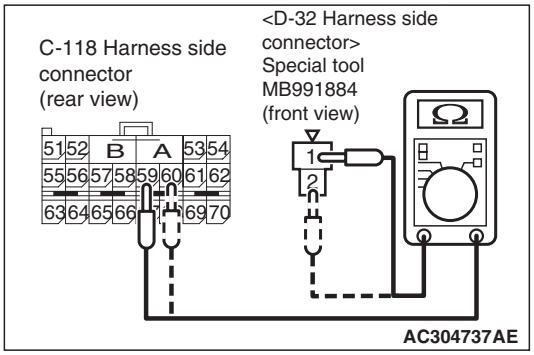

Do not insert a test probe into the terminal from its front side directly as the connector contact pressure may be weakened.

(3) Check for continuity between the following terminals.
- SRS-ECU connector C-118 (terminal No.59) and the special tool (terminal No.1)
- SRS-ECU connector C-118 (terminal No.60) and the special tool (terminal No.2)

OK: Less than 2 Ω

Q: Are the check results normal?
YES : Go to Step 5.
NO : Repair the harness wires between SRS-ECU connector C-118 (terminal No.59 and 60) and seat belt pre-tensioner (RH) connector D-32 (terminal No.2 and 1).

STEP 5. Check whether the diagnosis code is reset.

Q: Is diagnosis code B1461 set?
YES : Replace the SRS-ECU (Refer toP.52B-332).
NO : An intermittent malfunction is suspected (Refer to GROUP 00, How to Use Troubleshooting/Inspection Service Points P.00-5).

Main Index
Group TOC

Code No.B1462: Seat Belt Pre-Tensioner (RH) (Squib) System Fault for Earth Circuit (Short-Circuit to Earth)

Seat Belt Pre-Tensioner (RH) (Squib) Circuit

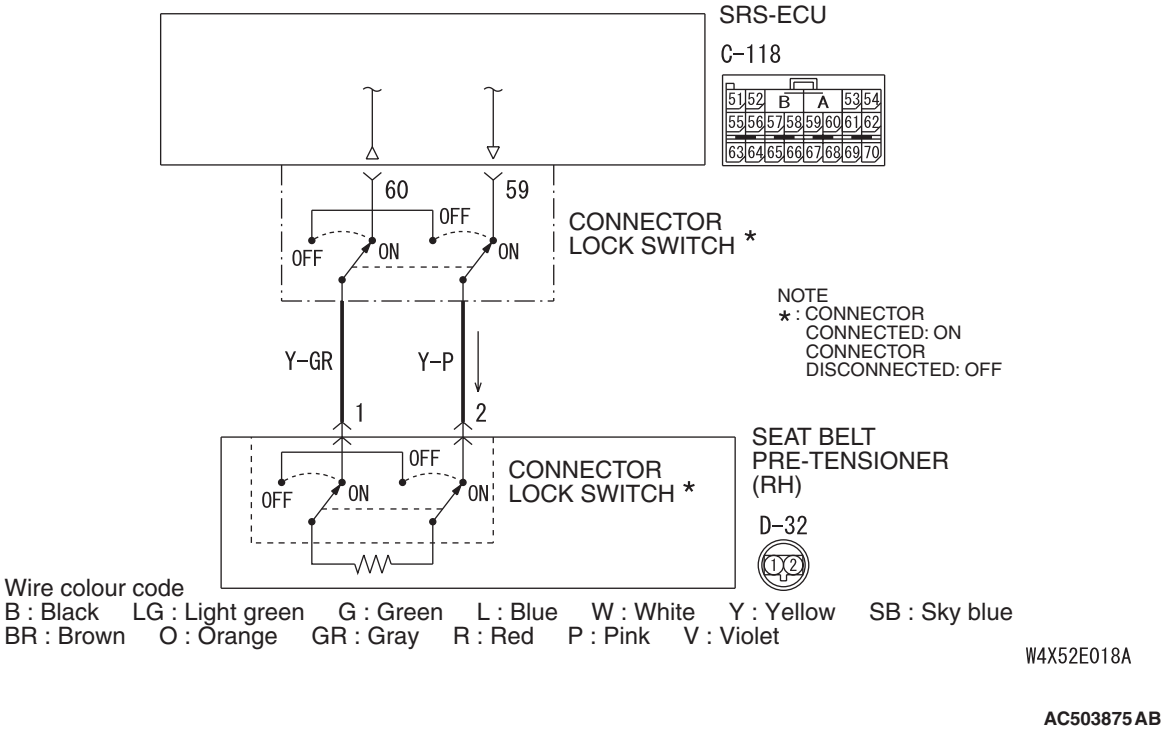

⚠ CAUTION

If diagnosis code B1462 is set in the SRS-ECU, always diagnose the CAN main bus line.

OPERATION

The SRS-ECU judges how severe a collision is by detecting signals from the front impact sensors and the front air bag analogue G-sensor. If the impact is over a predetermined level, the SRS-ECU sends an ignition signal. At this time, if the front air bag safing G-sensor is on, the pre-tensioner will deploy.

DIAGNOSIS CODE SET CONDITIONS

This diagnosis code is set if there is abnormal resistance between the input terminals of the seat belt pre-tensioner (RH) (squib).

PROBABLE CAUSES

- Damaged wiring harnesses or connectors
- Short to the ground in the seat belt pre-tensioner (RH) (squib) harness
- Malfunction of the SRS-ECU

DIAGNOSIS PROCEDURE

STEP 1. M.U.T.-III CAN bus diagnostics

Use the M.U.T.-III to diagnose the CAN bus lines.

Q: Is the check result normal?

YES : Go to Step 2.

NO : Repair the CAN bus line (Refer to GROUP 54F, Diagnosis P.54F-13).

STEP 2. Check whether the diagnosis code is reset.

Check again if the diagnosis code is set.

(1) Erase the diagnosis code.
(2) Ignition: "LOCK" (OFF) position to "ON"
(3) On completion, check that the diagnosis code is not reset.

Q: Is the diagnosis code set?

YES : Go to Step 3.

NO : There is an intermittent malfunction such as poor engaged connector(s) or open circuit (Refer to GROUP 00, How to Cope with Intermittent Malfunction P.00-5).

STEP 3. Check the seat belt pre-tensioner (RH) (M.U.T.-III diagnosis code).

(1) Disconnect the negative battery terminal.

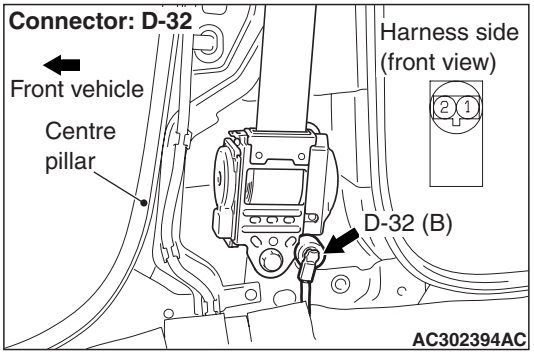

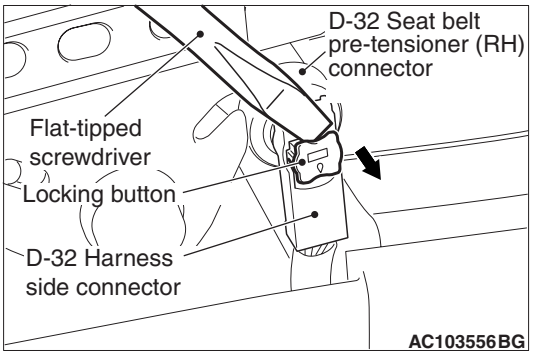

(2) Disconnect seat belt pre-tensioner (RH) connector D-32. Use a flat-tipped screwdriver to unlock the locking button at the harness side connector by withdrawing it toward you in two stages, and then disconnect the connector.

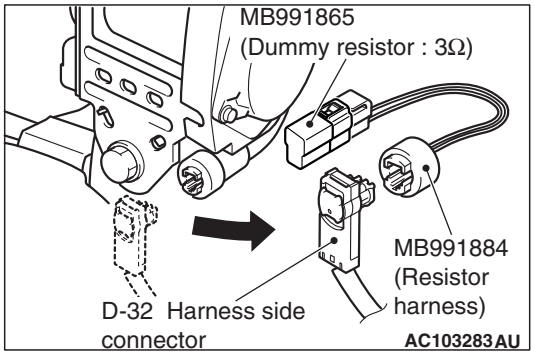

(3) Connect special tool dummy resistor (MB991865) to special tool resistor harness (MB991884).
(4) Connect special tool MB991884 to the D-32 harness side connector.
(5) Connect the negative battery terminal.
(6) Erase diagnosis code memory, and then check the diagnosis code.

Q: Is diagnosis code B1462 set?

YES : Go to Step 4.

NO : Replace the seat belt pre-tensioner (RH) (Refer to P.52B-350).

STEP 4. Check the seat belt pre-tensioner (RH) circuit. Resistance measurement at the SRS-ECU connector C-118.

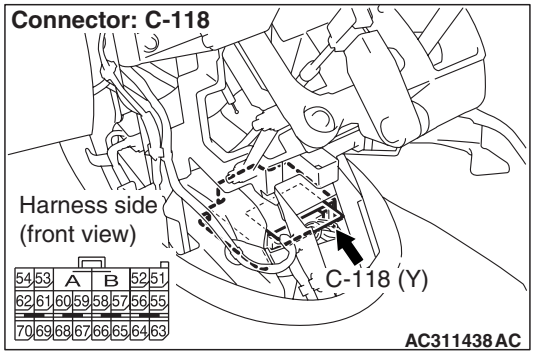

(1) Disconnect SRS-ECU connector C-118.

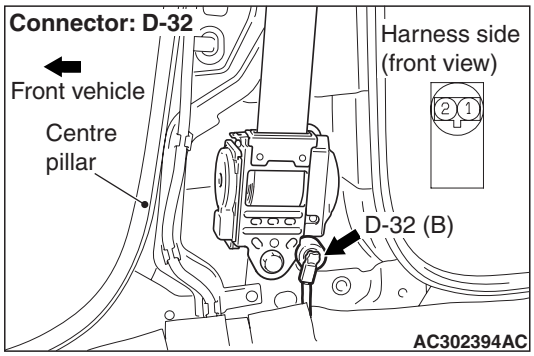

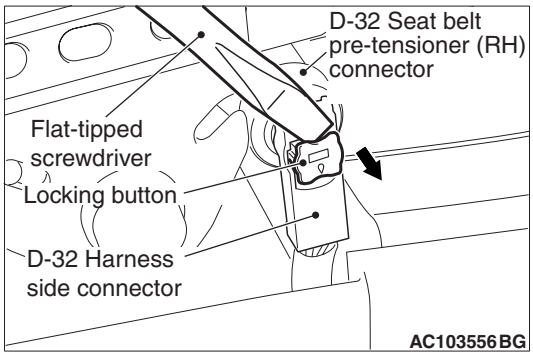

(2) Disconnect seat belt pre-tensioner (RH) connector D-32. Use a flat-tipped screwdriver to unlock the locking button at the harness side connector by withdrawing it toward you in two stages, and then disconnect the connector.

⚠ CAUTION

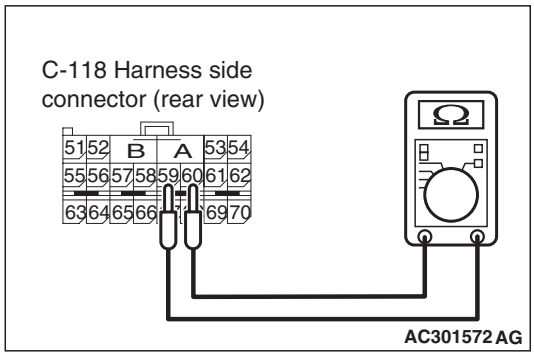

Main Index
Group TOC

Do not insert a test probe into the terminal from its front side directly, as the connector contact pressure may be weakened.

(3) Check for continuity between C-118 harness side connector terminals 59, 60 and body earth.

OK: Open circuit

Q: Is the check result normal?

YES : Go to Step 5.

NO : Repair the harnss wire between SRS-ECU connector C-118 (terminal No. 59 and 60) and seat belt pre-tensioner (RH) connector D-32 (terminal No.2 and 1).

STEP 5. Check whether the diagnosis code is reset.

Q: Is diagnosis code B1462 set?

YES : Replace the SRS-ECU (Refer toP.52B-332).

NO : An intermittent malfunction is suspected (Refer to GROUP 00, How to Use Troubleshooting/Inspection Service Points P.00-5).

Code No.B1463: Seat Belt Pre-Tensioner (RH) (Squib) System Fault for Power Supply Circuit (Short-Circuited to Power Supply)

Seat Belt Pre-Tensioner (RH) (Squib) Circuit

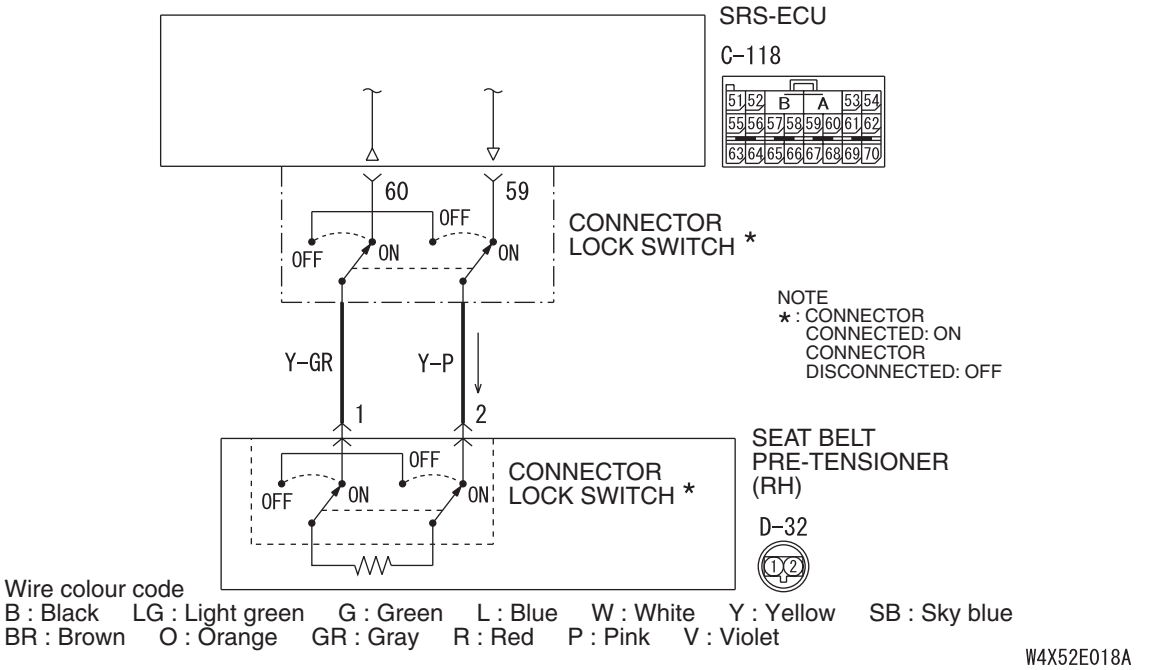

AC503875AB

⚠ CAUTION

If diagnosis code B1463 is set in the SRS-ECU, always diagnose the CAN main bus line.

OPERATION

The SRS-ECU judges how severe a collision is by detecting signals from the front impact sensors and the front air bag analogue G-sensor. If the impact is over a predetermined level, the SRS-ECU sends an ignition signal. At this time, if the front air bag safing G-sensor is on, the pre-tensioner will deploy.

DIAGNOSIS CODE SET CONDITIONS

This diagnosis code is set if there is abnormal resistance between the input terminals of the seat belt pre-tensioner (RH) (squib).

TROUBLESHOOTING HITS

- Damaged wiring harnesses or connectors
- Short to the power supply in the seat belt pre-tensioner (RH) (squib) harness
- Malfunction of the SRS-ECU

DIAGNOSIS PROCEDURE

STEP 1. M.U.T.-III CAN bus diagnostics

Use the M.U.T.-III to diagnose the CAN bus lines.

Q: Is the check result normal?

YES : Go to Step 2.

NO : Repair the CAN bus line (Refer to GROUP 54F, Diagnosis P.54F-13).

STEP 2. Check whether the diagnosis code is reset.

Check again if the diagnosis code is set.

(1) Erase the diagnosis code.
(2) Ignition: "LOCK" (OFF) position to "ON"
(3) On completion, check that the diagnosis code is not reset.

Q: Is the diagnosis code set?

YES : Go to Step 3 .

NO : There is an intermittent malfunction such as poor engaged connector(s) or open circuit (Refer to GROUP 00, How to Cope with Intermittent Malfunction P.00-5).

STEP 3. Check the seat belt pre-tensioner (RH) (M.U.T.-III diagnosis code).

(1) Disconnect the negative battery terminal.

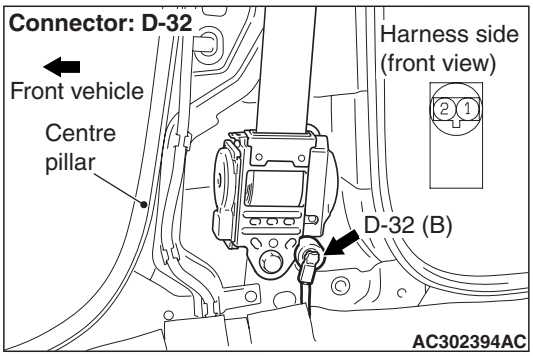

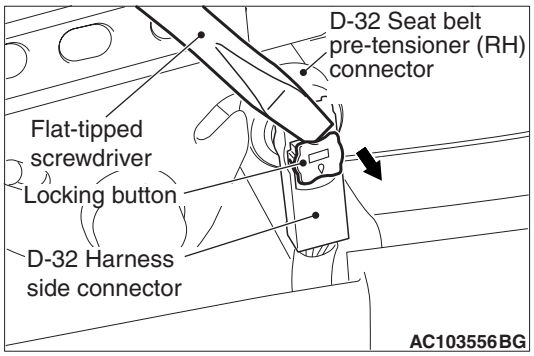

(2) Disconnect seat belt pre-tensioner (RH) connector D-32. Use a flat-tipped screwdriver to unlock the locking button at the harness side connector by withdrawing it toward you in two stages, and then disconnect the connector.

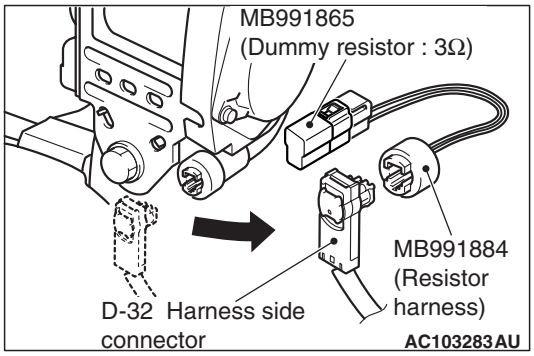

(3) Connect special tool dummy resistor (MB991865) to special tool resistor harness (MB991884).
(4) Connect special tool MB991884 to the D-32 harness side connector.
(5) Connect the negative battery terminal.
(6) Erase diagnosis code memory, and then check the diagnosis code.

Q: Is diagnosis code B1463 set?

YES : Go to Step 4.

NO : Replace the seat belt pre-tensioner (RH) (Refer to P.52B-350).

Main Index
Group TOC

STEP 4. Check the seat belt pre-tensioner circuit. Voltage measurement at the SRS-ECU connector C-118.

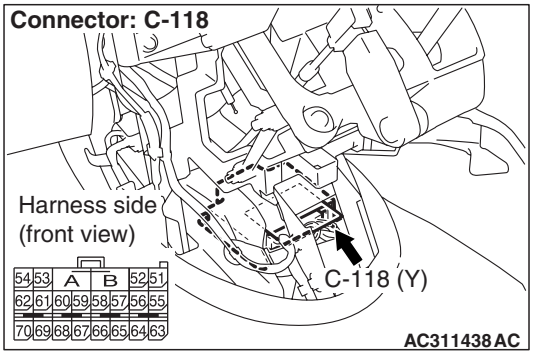

(1) Disconnect SRS-ECU connector C-118.

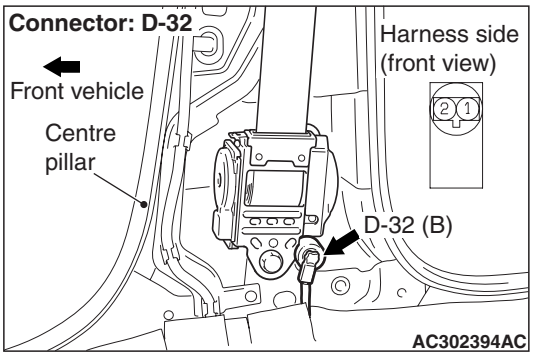

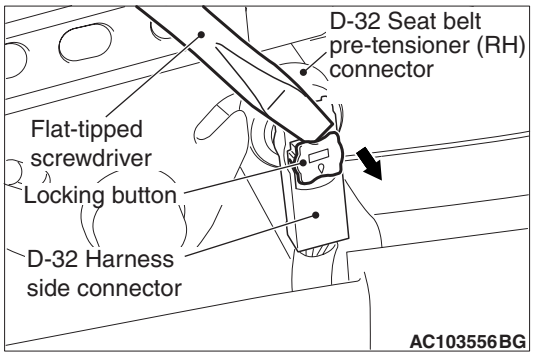

(2) Disconnect seat belt pre-tensioner (RH) connector D-32. Use a flat-tipped screwdriver to unlock the locking button at the harness side connector by withdrawing it toward you in two stages, and then disconnect the connector.

(3) Turn the ignition switch to the "ON" position,

⚠ CAUTION

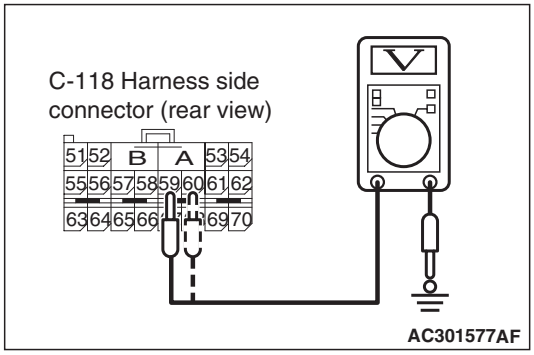

Do not insert a test probe into the terminal from its front side directly, as the connector contact pressure may be weakened.

(4) Measure the voltage between C-118 harness side connector terminals 59, 60 and body earth.

OK: 0 V

Q: Is the measured voltage within the specified range?

YES : Go to Step 5.

NO : Repair the harness wire between SRS-ECU connector C-118 (terminal No.59 and 60) and seat belt pre-tensioner (RH) connector D-32 (terminal No.1 and 2).

STEP 5. Check whether the diagnosis code is reset.

Q: Is diagnosis code B1463 set?

YES : Replace the SRS-ECU (Refer to P.52B-332).

NO : An intermittent malfunction is suspected (Refer to GROUP 00, How to Use Troubleshooting/Inspection Service Points P.00-5).

Code No.B1470: Seat Belt Pre-Tensioner (LH) (Squib) System Fault 1 (Short Circuit between Terminals of the Squib Circuit)

Seat Belt Pre-Tensioner (LH) (Squib) Circuit

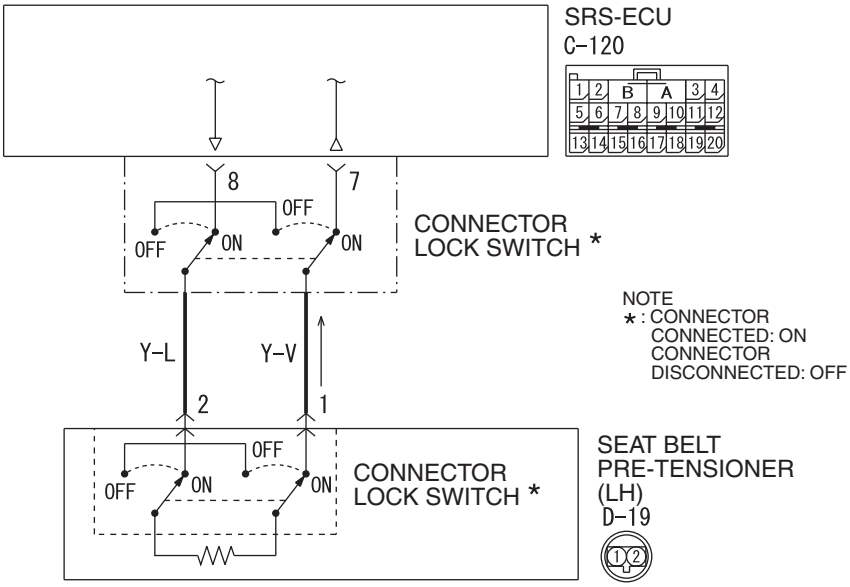

Wire colour code
B : Black LG : Light green G : Green L : Blue W : White Y : Yellow SB : Sky blue W4X52E017A
BR : Brown O : Orange GR : Gray R : Red P : Pink V : Violet

AC503882 AB

⚠ CAUTION

If diagnosis code B1470 is set in the SRS-ECU, always diagnose the CAN main bus line.

OPERATION

The SRS-ECU judges how severe a collision is by detecting signals from the front impact sensors and the front air bag analogue G-sensor. If the impact is over a predetermined level, the SRS-ECU sends an ignition signal. At this time, if the front air bag safing G-sensor is on, the pre-tensioner will deploy.

DIAGNOSIS CODE SET CONDITIONS

This diagnosis code is set if there is abnormal resistance between the input terminals of the seat belt pre-tensioner (LH) (squib).

PROBABLE CAUSES

- Improper engaged connector or defective short spring*
- Short circuit between the seat belt pre-tensioner (LH) (squib) circuit terminals
- Damaged connector(s)
- Malfunction of the SRS-ECU

*NOTE: *: The squib circuit connectors integrate a "short" spring (which prevents the seat belt pre-tensioner from deploying unintentionally due to static electricity by shorting the positive wire to the earth wire in the squib circuit when the connectors are disconnected) (Refer to P.52B-3). Therefore, if connector C-120 or D-19 is damaged or improperly engaged, the short spring may not be released when the connector is connected.*

DIAGNOSIS PROCEDURE

STEP 1. M.U.T.-III CAN bus diagnostics

Use the M.U.T.-III to diagnose the CAN bus lines.

Q: Is the check result normal?

YES : Go to Step 2 .

NO : Repair the CAN bus line (Refer to GROUP 54F, Diagnosis P.54F-13).

STEP 2. Check whether the diagnosis code is reset.

Check again if the diagnosis code is set.

(1) Erase the diagnosis code.

(2) Ignition: "LOCK" (OFF) position to "ON"

(3) On completion, check that the diagnosis code is not reset.

Q: Is the diagnosis code set?

YES : Go to Step 3 .

NO : There is an intermittent malfunction such as poor engaged connector(s) or open circuit (Refer to GROUP 00, How to Cope with Intermittent Malfunction P.00-5).

STEP 3. M.U.T.-III diagnosis code

⚠ CAUTION

To prevent damage to scan tool MB991958, always turn the ignition switch to the "LOCK" (OFF) position before connecting or disconnecting scan tool MB991958.

(1) Turn the ignition switch to the "ON" position.

(2) Check if the diagnosis code is set.

(3) Turn the ignition switch to the "LOOK" (OFF) position.

Q: Is diagnosis code B1519 set?

YES : Go to Step 4.

NO : Go to Step 5.

STEP 4. Connector lock check: SRS-ECU connector C-120 (M.U.T.-III diagnosis code)

(1) Disconnect the negative battery terminal.

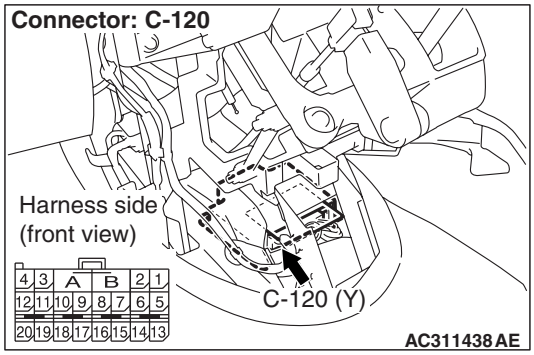

(2) Disconnect the connectors C-120 and then reconnect them.

(3) Connector the negative battery terminal.

(4) Erase the diagnosis code memory, and check the diagnosis code.

Q: Is diagnosis code B1470 set?

YES : Go to Step 5.

NO : The procedure is complete. It is assumed that diagnosis code B1470 set as connector C-120, D-19 was engaged improperly.

STEP 5. Connector lock check: SRS-ECU connector C-120 and seat belt pre-tensioner (LH) connector D-19 (M.U.T.-III diagnosis code)

(1) Disconnect the negative battery terminal.

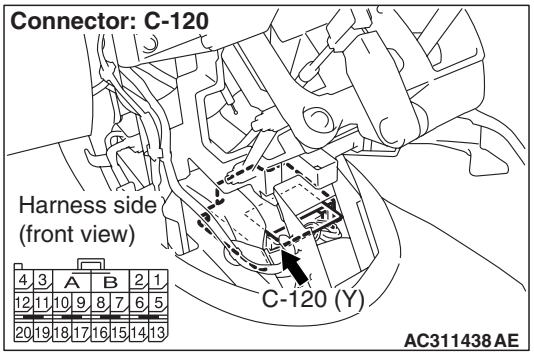

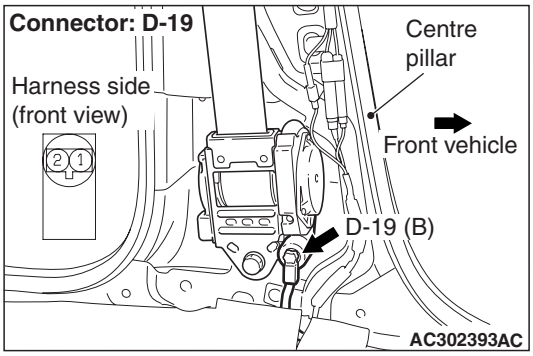

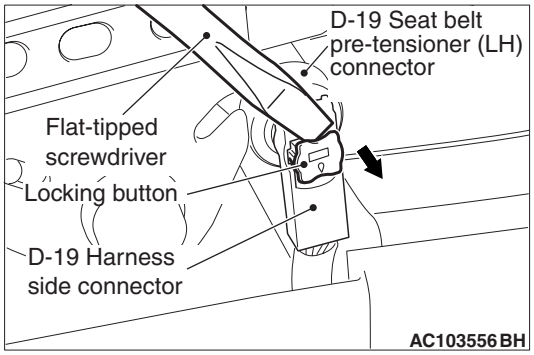

(2) Disconnect connectors C-120 and D-19, and then reconnect them. For connector D-19, use a flat-tipped screwdriver to unlock the locking button at the harness side connector by withdrawing it toward you in two stages, and then disconnect the connector.
(3) Connector the negative battery terminal.
(4) Erase the diagnosis code memory, and check the diagnosis code.

Q: Is diagnosis code B1470 set?
YES : Go to Step 6.
NO : The procedure is complete. It is assumed that diagnosis code B1470 set because connector C-120 or D-19 was engaged improperly.

STEP 6. Check the seat belt pre-tensioner (LH) (M.U.T.-III diagnosis code).

(1) Disconnect the negative battery terminal.

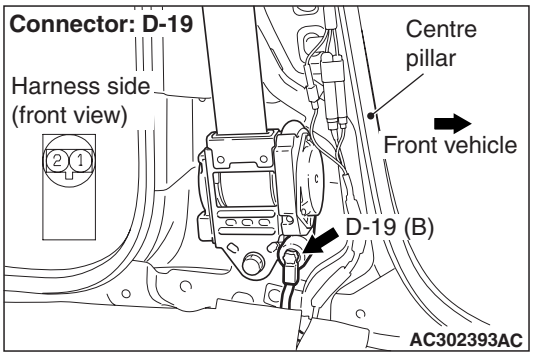

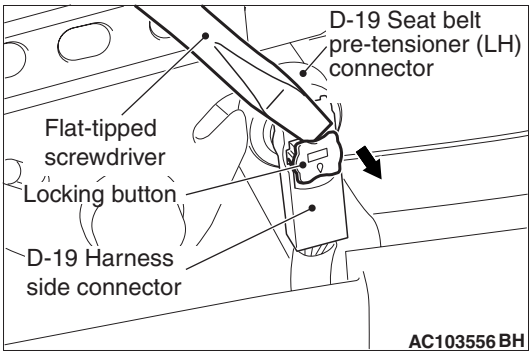

(2) Disconnect seat belt pre-tensioner (LH) connector D-19. Use a flat-tipped screwdriver to unlock the locking button at the harness side connector by withdrawing it toward you in two stages, and then disconnect the connector.

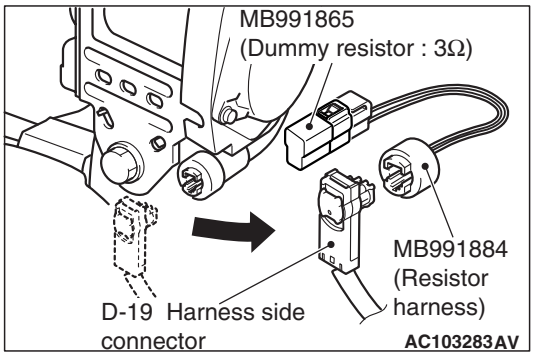

(3) Connect special tool dummy resistor (MB991865) to special tool resistor harness (MB991884).
(4) Connect special tool MB991884 to the D-19 harness side connector.
(5) Connect the negative battery terminal.
(6) Erase diagnosis code memory, and then check the diagnosis code.

Q: Is diagnosis code B1470 set?
YES : Go to Step 7.
NO : Replace the seat belt pre-tensioner (LH) (Refer to P.52B-350).

STEP 7. Check the seat belt pre-tensioner (LH) circuit. Resistance measurement at the SRS-ECU connector C-120.

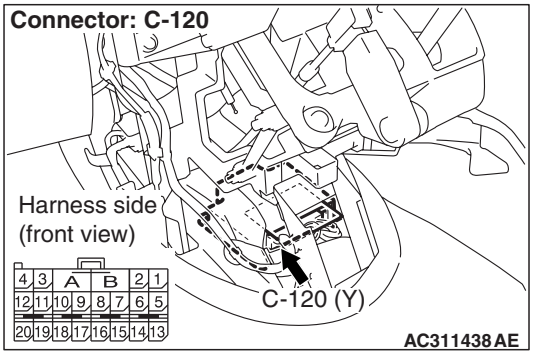

(1) Disconnect SRS-ECU connector C-120.

⚠ DANGER

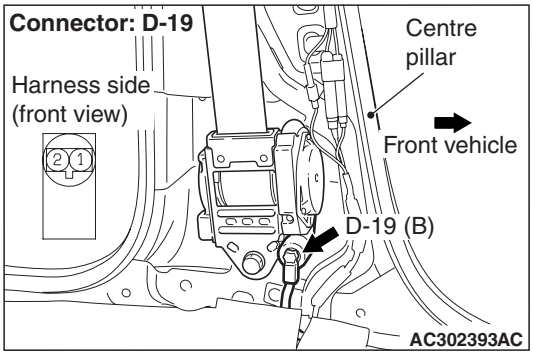

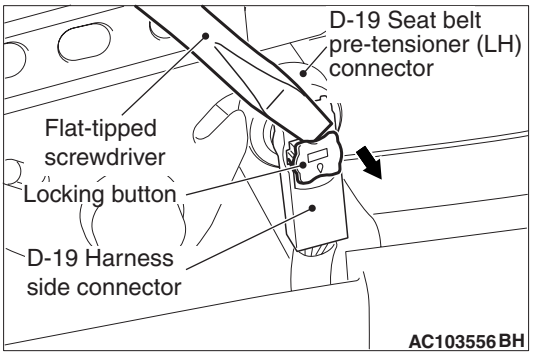

To prevent the seat belt pre-tensioner from deploying unintentionally, disconnect the seat belt pre-tensioner (LH) connector D-19 to short the squib circuit.

(2) Disconnect seat belt pre-tensioner (LH) connector D-19. Use a flat-tipped screwdriver to unlock the locking button at the harness side connector by withdrawing it toward you in two stages, and then disconnect the connector.

⚠ CAUTION

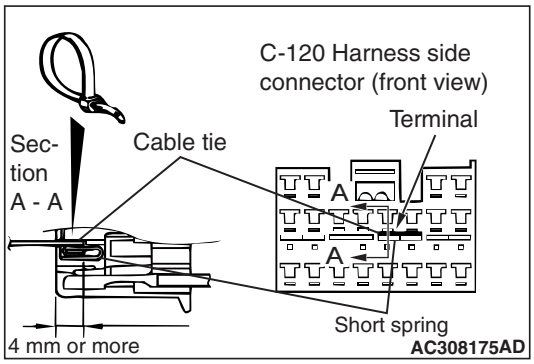

Insert an insulator such as a cable tie to a depth of 4mm or more, otherwise the short spring will not be released.

(3) Insert a cable tie [3 mm wide, 0.5 mm thick] between terminals 7, 8 and the short spring to release the short spring.

⚠ CAUTION

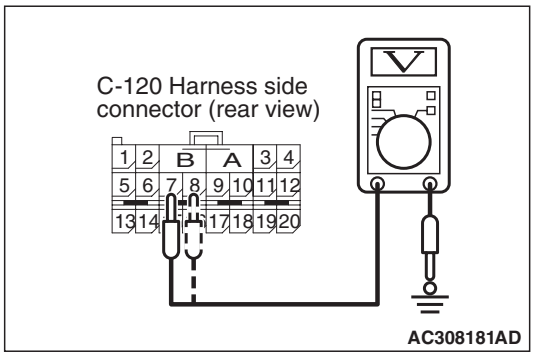

Do not insert a test probe into the terminal from its front side directly, as the connector contact pressure may be weakened.

(4) Check for continuity between C-120 harness side connector terminals 7 and 8.

OK: Open circuit.

Q: Is the check result normal?

YES : Go to Step 8.

NO : Repair the harness wires between SRS-ECU connector C-120 (terminal No.7 and 8) and seat belt pre-tensioner (LH) connector D-19 (terminal No.1 and 2).

STEP 8. Check whether the diagnosis code is reset.

Q: Is diagnosis code B1470 set?

YES : Replace the SRS-ECU (Refer toP.52B-332).

NO : An intermittent malfunction is suspected (Refer to GROUP 00, How to Use Troubleshooting/Inspection Service Points P.00-5).

Main Index
Group TOC

Code No.B1471: Seat Belt Pre-Tensioner (LH) (Squib) System Fault 2 (Open in the Squib Circuit)

Seat Belt Pre-Tensioner (LH) (Squib) Circuit

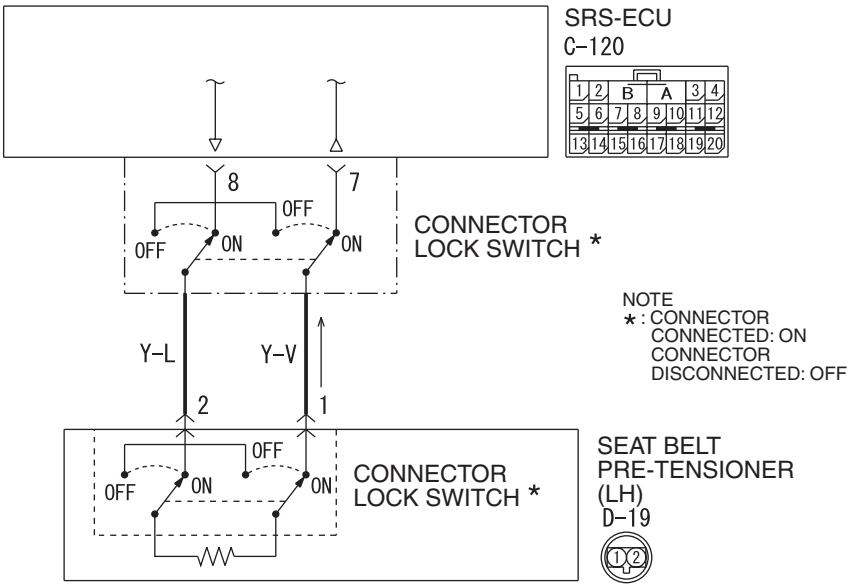

Wire colour code
B : Black LG : Light green G : Green L : Blue W : White Y : Yellow SB : Sky blue W4X52E017A
BR : Brown O : Orange GR : Gray R : Red P : Pink V : Violet

AC503882 AB

⚠ CAUTION

If diagnosis code B1471 is set in the SRS-ECU, always diagnose the CAN main bus line.

OPERATION

The SRS-ECU judges how severe a collision is by detecting signals from the front impact sensors and the front air bag analogue G-sensor. If the impact is over a predetermined level, the SRS-ECU sends an ignition signal. At this time, if the front air bag safing G-sensor is on, the pre-tensioner will deploy.

DIAGNOSIS CODE SET CONDITIONS

This diagnosis code is set if there is abnormal resistance between the input terminals of the seat belt pre-tensioner (LH) (squib).

PROBABLE CAUSES

- Improper connector contact
- Open circuit in the seat belt pre-tensioner (LH) (squib) circuit
- Malfunction of the SRS-ECU

DIAGNOSIS PROCEDURE

STEP 1.M.U.T.-III CAN bus diagnostics

Use the M.U.T.-III to diagnose the CAN bus lines.

Q: Is the check result normal?

YES : Go to Step 2.

NO : Repair the CAN bus line (Refer to GROUP 54F, Diagnosis P.54F-13).

STEP 2. Check whether the diagnosis code is reset.

Check again if the diagnosis code is set.

(1) Erase the diagnosis code.
(2) Ignition: "LOCK" (OFF) position to "ON"
(3) On completion, check that the diagnosis code is not reset.

Q: Is the diagnosis code set?

YES : Go to Step 3 .

NO : There is an intermittent malfunction such as poor engaged connector(s) or open circuit (Refer to GROUP 00, How to Cope with Intermittent Malfunction P.00-5).

STEP 3. Check the seat belt pre-tensioner (LH) (M.U.T.-III diagnosis code).

(1) Disconnect the negative battery terminal.

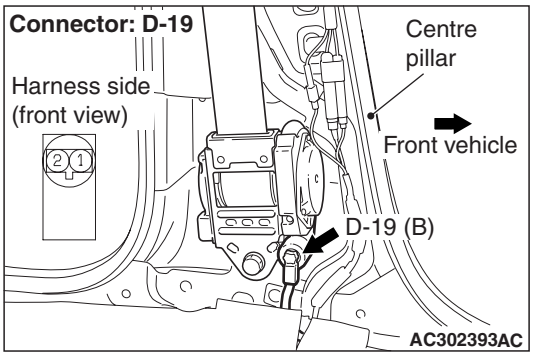

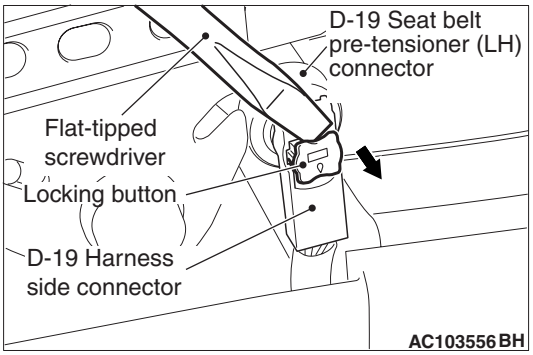

(2) Disconnect seat belt pre-tensioner (LH) connector D-19. Use a flat-tipped screwdriver to unlock the locking button at the harness side connector by withdrawing it toward you in two stages, and then disconnect the connector.

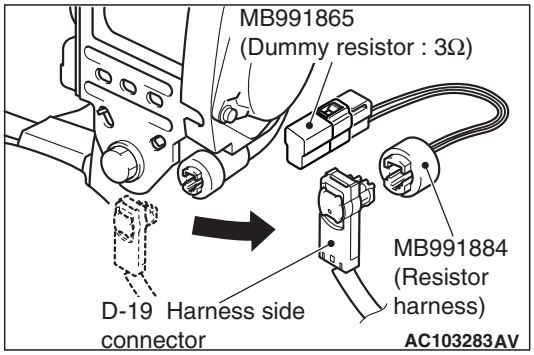

(3) Connect special tool dummy resistor (MB991865) to special tool resistor harness (MB991884).

(4) Connect special tool MB991884 to the D-19 harness side connector.

(5) Connect the negative battery terminal.

(6) Erase diagnosis code memory, and then check the diagnosis code.

Q: Is diagnosis code B1471 set?

YES : Go to Step 4.

NO : Replace the seat belt pre-tensioner (LH) (Refer to P.52B-350).

STEP 4. Resistance measurement between SRS-ECU connector C-120 (terminal No.7 and 8) and the seat belt pre-tensioner (LH) connector D-19 (terminal No.1 and 2).

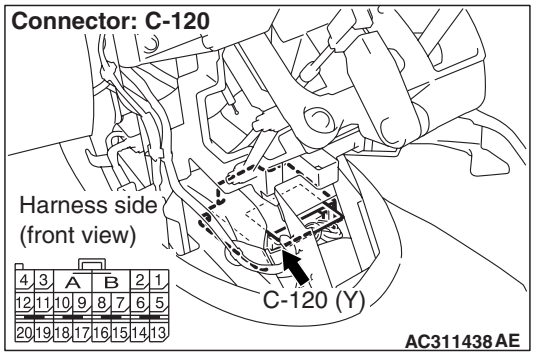

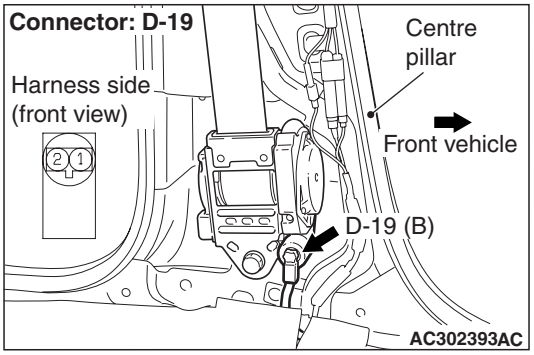

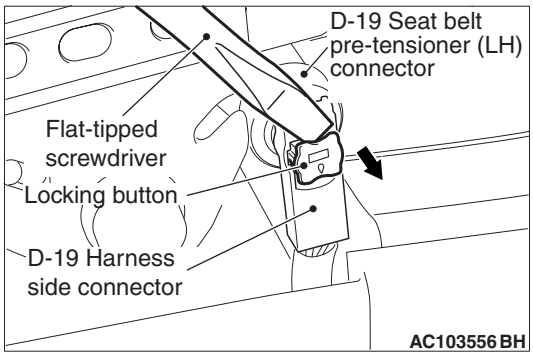

(1) Disconnect SRS-ECU connector C-120 and seat belt pre-tensioner (LH) connector D-19, and measure at the wiring harness side. For connector D-19, use a flat-tipped screwdriver to unlock the locking button at the harness side connector by with drawing it toward you in two stages, and then disconnect the connector.

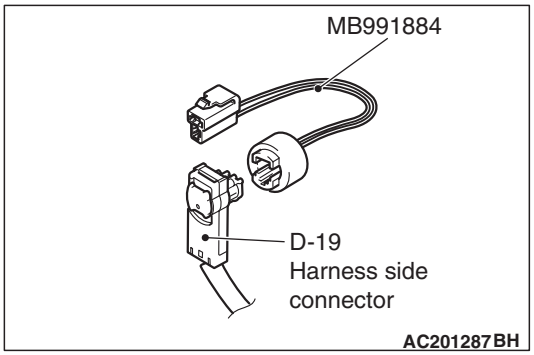

(2) Connect D-19 harness side connector to special tool resistor harness (MB991884).

⚠ CAUTION

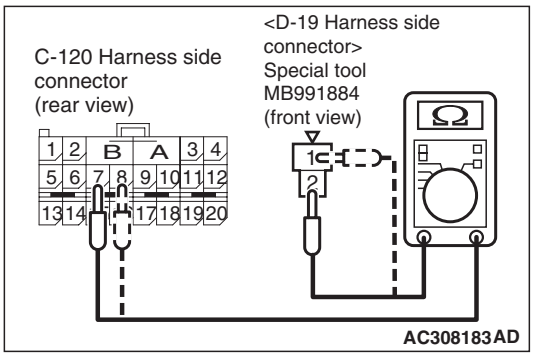

Do not insert a test probe into the terminal from its front side directly, as the connector contact pressure may be weakened.

(3) Check for continuity between the following terminals.
- SRS-ECU connector C-120 (terminal No.7) and the special tool (terminal No.2)
- SRS-ECU connector C-120 (terminal No.8) and the special tool (terminal No.1)

OK: Less than 2 Ω

Q: Are the check results normal?
YES : Go to Step 5.
NO : Repair the harness wires between SRS-ECU connector C-120 (terminal No.7 and 8) seat belt pre-tensioner (LH) connector D-19 (terminal No.1 and 2).

STEP 5. Check whether the diagnosis code is reset.

Q: Is diagnosis code B1471 set?
YES : Replace the SRS-ECU (Refer toP.52B-332).
NO : An intermittent malfunction is suspected (Refer to GROUP 00, How to Use Troubleshooting/Inspection Service Points P.00-5).

Main Index
Group TOC

Code No.B1472: Seat Belt Pre-Tensioner (LH) (Squib) System Fault for Earth Circuit (Short-Circuited to Earth)

Seat Belt Pre-Tensioner (LH) (Squib) Circuit

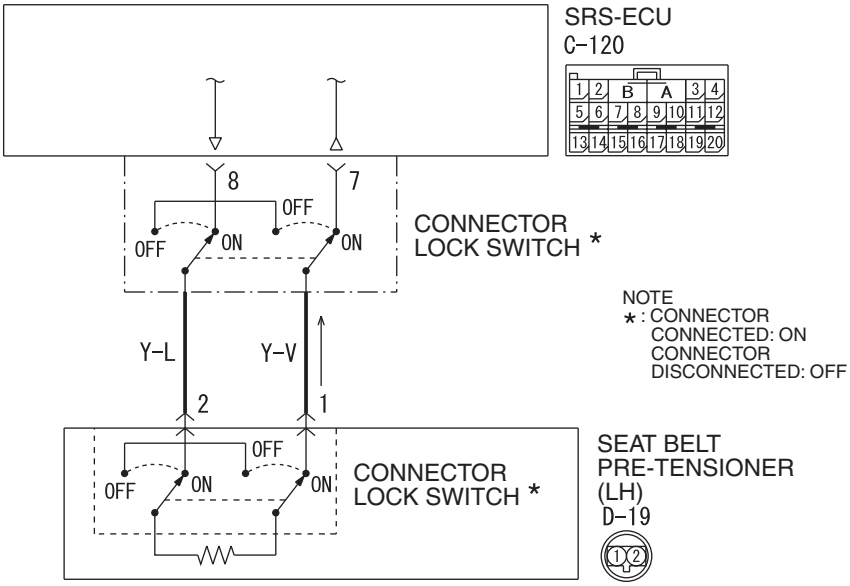

Wire colour code
B : Black LG : Light green G : Green L : Blue W : White Y : Yellow SB : Sky blue W4X52E017A
BR : Brown O : Orange GR : Gray R : Red P : Pink V : Violet

AC503882 AB

⚠ CAUTION

If diagnosis code B1472 is set in the SRS-ECU, always diagnose the CAN main bus line.

OPERATION

The SRS-ECU judges how severe a collision is by detecting signals from the front impact sensors and the front air bag analogue G-sensor. If the impact is over a predetermined level, the SRS-ECU sends an ignition signal. At this time, if the front air bag safing G-sensor is on, the pre-tensioner will deploy.

DIAGNOSIS CODE SET CONDITIONS

This diagnosis code is set if there is abnormal resistance between the input terminals of the seat belt pre-tensioner (LH) (squib).

PROBABLE CAUSES

- Damaged wiring harnesses or connectors
- Short to the ground in the seat belt pre-tensioner (LH) (squib) harness
- Malfunction of the SRS-ECU

DIAGNOSIS PROCEDURE

STEP 1. M.U.T.-III CAN bus diagnostics

Use the M.U.T.-III to diagnose the CAN bus lines.

Q: Is the check result normal?

YES : Go to Step 2.

NO : Repair the CAN bus line (Refer to GROUP 54F, Diagnosis P.54F-13).

STEP 2. Check whether the diagnosis code is reset.

Check again if the diagnosis code is set.

(1) Erase the diagnosis code.
(2) Ignition: "LOCK" (OFF) position to "ON"
(3) On completion, check that the diagnosis code is not reset.

Q: Is the diagnosis code set?

YES : Go to Step 3.

NO : There is an intermittent malfunction such as poor engaged connector(s) or open circuit (Refer to GROUP 00, How to Cope with Intermittent Malfunction P.00-5).

STEP 3. Check the seat belt pre-tensioner (LH) (M.U.T.-III diagnosis code).

(1) Disconnect the negative battery terminal.

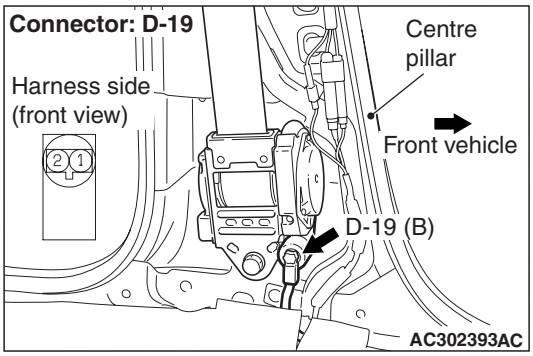

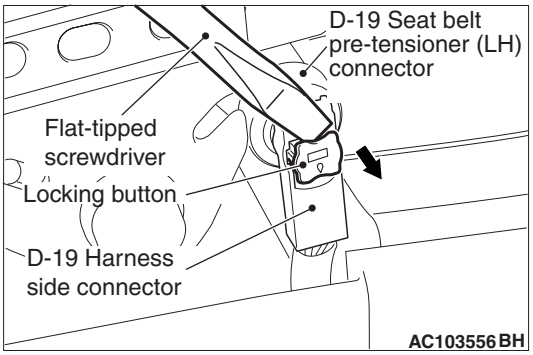

(2) Disconnect seat belt pre-tensioner (LH) connector D-19. Use a flat-tipped screwdriver to unlock the locking button at the harness side connector by with drawing it toward you in two stages, and then disconnect the connector.

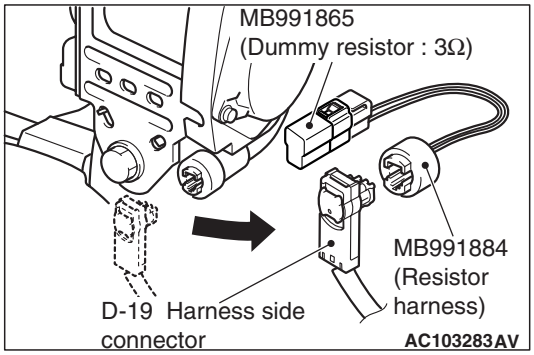

(3) Connect special tool dummy resistor (MB991865) to special tool resistor harness (MB991884).
(4) Connect special tool MB991884 to the D-19 harness side connector.
(5) Connect the negative battery terminal.
(6) Erase diagnosis code memory, and check the diagnosis code.

Q: Is diagnosis code B1472 set?

YES : . Go to Step 4.

NO : . Replace the seat belt pre-tensioner (LH) (Refer to P.52B-350).

STEP 4. Check the seat belt pre-tensioner (LH) circuit. Resistance measurement at the SRS-ECU connector C-120.

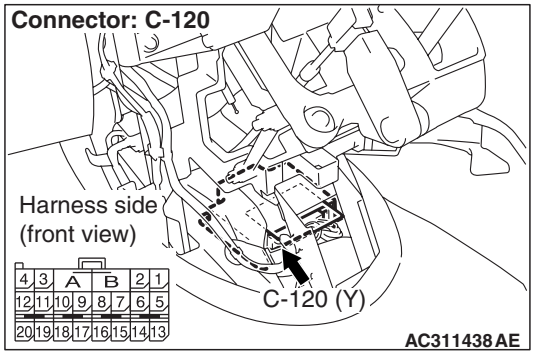

(1) Disconnect SRS-ECU connector C-120.

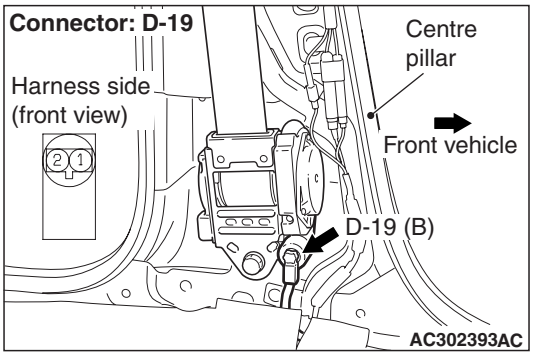

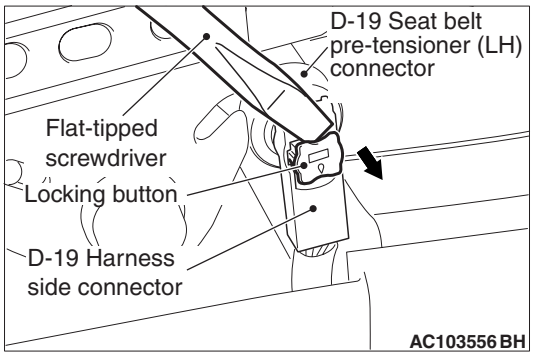

(2) Disconnect seat belt pre-tensioner (LH) connector D-19. Use a flat-tipped screwdriver to unlock the locking button at the harness side connector by with drawing it toward you in two stages, and then disconnect the connector.

Main Index
Group TOC

⚠ CAUTION

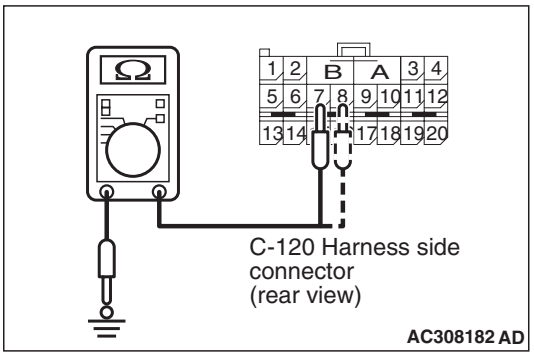

Do not insert a test probe into the terminal from its front side directly, as the connector contact pressure may be weakened.

(3) Check for continuity between C-120 harness side connector terminals 7, 8 and body earth.

OK: Open circuit

Q: Is the check result normal?

YES : Go to Step 5.

NO : Repair the harness wires between SRS-ECU connector C-120 (terminal No.7 and 8) and seat belt pre-tensioner (LH) connector D-19 (terminal No.1 and 2).

STEP 5. Check whether the diagnosis code is reset.

Q: Is diagnosis code B1472 set?

YES : Replace the SRS-ECU (Refer to P.52B-332).

NO : An intermittent malfunction is suspected (Refer to GROUP 00, How to Use Troubleshooting/Inspection Service Points P.00-5).

Code No.B1473: Seat Belt Pre-Tensioner (LH) (Squib) System Fault for Power Supply Circuit (Short-Circuit to Power Supply)

Seat Belt Pre-Tensioner (LH) (Squib) Circuit

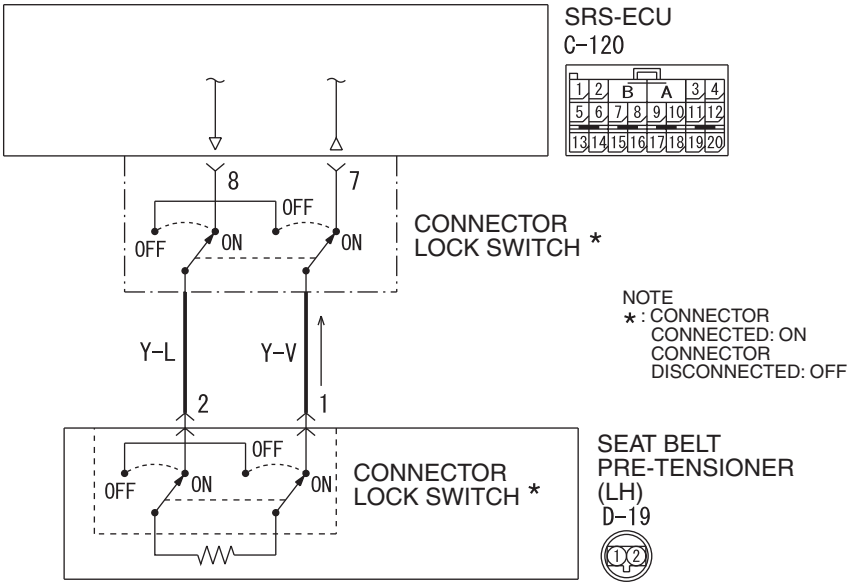

Wire colour code
B : Black LG : Light green G : Green L : Blue W : White Y : Yellow SB : Sky blue
BR : Brown O : Orange GR : Gray R : Red P : Pink V : Violet

⚠ CAUTION

If diagnosis code B1473 is set in the SRS-ECU, always diagnose the CAN main bus line.

OPERATION

The SRS-ECU judges how severe a collision is by detecting signals from the front impact sensors and the front air bag analogue G-sensor. If the impact is over a predetermined level, the SRS-ECU sends an ignition signal. At this time, if the front air bag safing G-sensor is on, the pre-tensioner will deploy.

DTC SET CONDITIONS

Thisdiagnosis code is set if there is abnormal resistance between the input terminals of the seat belt pre-tensioner (LH) (squib).

TROUBLESHOOTING HITS

- Damaged wiring harnesses or connectors
- Short to the power supply in the seat belt pre-tensioner (LH) (squib) harness
- Malfunction of the SRS-ECU

DIAGNOSIS PROCEDURE

STEP 1. M.U.T.-III CAN bus diagnostics

Use the M.U.T.-III to diagnose the CAN bus lines.

Q: Is the check result normal?

YES : Go to Step 2.

NO : Repair the CAN bus line (Refer to GROUP 54F, Diagnosis P.54F-13).

STEP 2. Check whether the diagnosis code is reset.

Check again if the diagnosis code is set.

(1) Erase the diagnosis code.

(2) Ignition: "LOCK" (OFF) position to "ON"

(3) On completion, check that the diagnosis code is not reset.

Q: Is the diagnosis code set?

YES : Go to Step 3.

NO : Go to Step 5.

STEP 3. Check the seat belt pre-tensioner (LH) (M.U.T.-III diagnosis code).

(1) Disconnect the negative battery terminal.

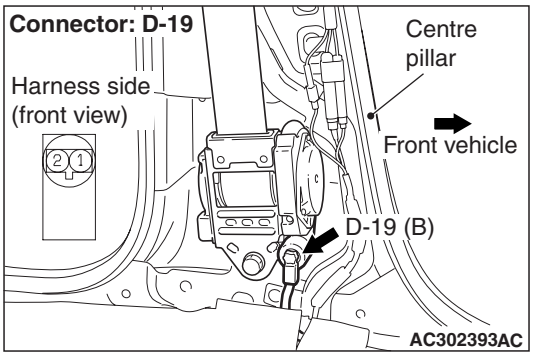

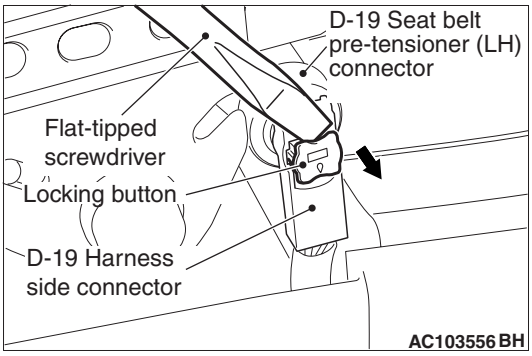

(2) Disconnect seat belt pre-tensioner (LH) connector D-19. Use a flat-tipped screwdriver to unlock the locking button at the harness side connector by with drawing it toward you in two stages, and then disconnect the connector.

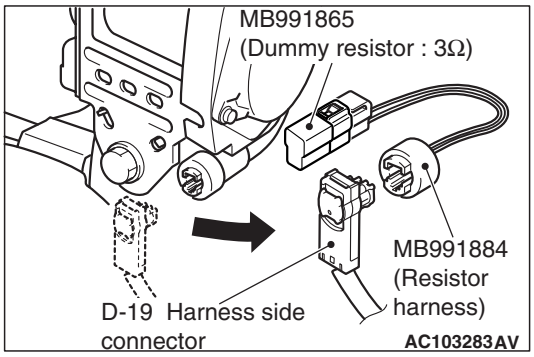

(3) Connect special tool dummy resistor (MB991865) to special tool resistor harness (MB991884).

(4) Connect special tool MB991884 to the D-19 harness side connector.

(5) Connect the negative battery terminal.

(6) Erase diagnosis code memory, and check the diagnosis code.

Q: Is diagnosis code B1473 set?

YES : Go to Step 4.

NO : Replace the seat belt pre-tensioner (LH) (Refer to P.52B-350).

Main Index
Group TOC

STEP 4. Check the driver's seat belt pre-tensioner circuit. Voltage measurement at the SRS-ECU connector C-120.

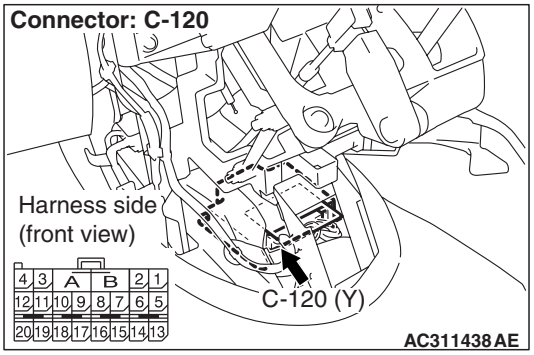

(1) Disconnect SRS-ECU connector C-120.

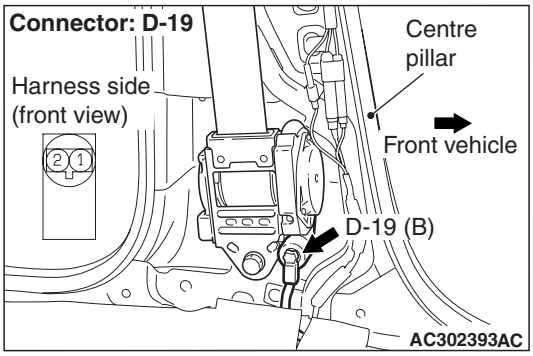

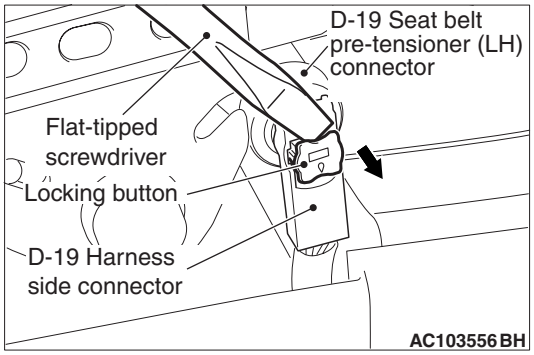

(2) Disconnect seat belt pre-tensioner (LH) connector D-19. Use a flat-tipped screwdriver to unlock the locking button at the harness side connector by with drawing it toward you in two stages, and then disconnect the connector.

(3) Turn the ignition switch to the "ON" position.

⚠ CAUTION

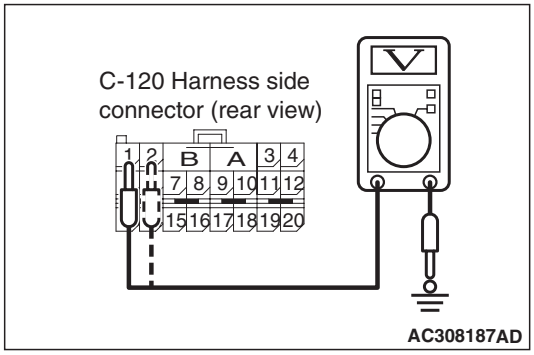

Do not insert a test probe into the terminal from its front side directly, as the connector contact pressure may be weakened.

(4) Measure the voltage between C-120 harness side connector terminals 7, 8 and body earth.

OK: 0 V

Q: Is the check result normal?

YES : Go to Step 5.

NO : Repair the harness wires between SRS-ECU connector C-120 (terminal No.7 and 8) and seat belt pre-tensioner (LH) connector D-19 (terminal No.1 and 2).

STEP 5. Check whether the diagnosis code is reset.

Q: Is diagnosis code B1473 set?

YES : Replace the SRS-ECU (Refer toP.52B-332).

NO : An intermittent malfunction is suspected (Refer to GROUP 00, How to Use Troubleshooting/Inspection Service Points P.00-5).

Main Index
Group TOC

Code No.B1476: IG1 Power Supply Circuit System (Fuse No.2 Circuit)
Code No.B1477: IG1 Power Supply Circuit System (Fuse No.3 Circuit)

IG1 Power Supply Circuit

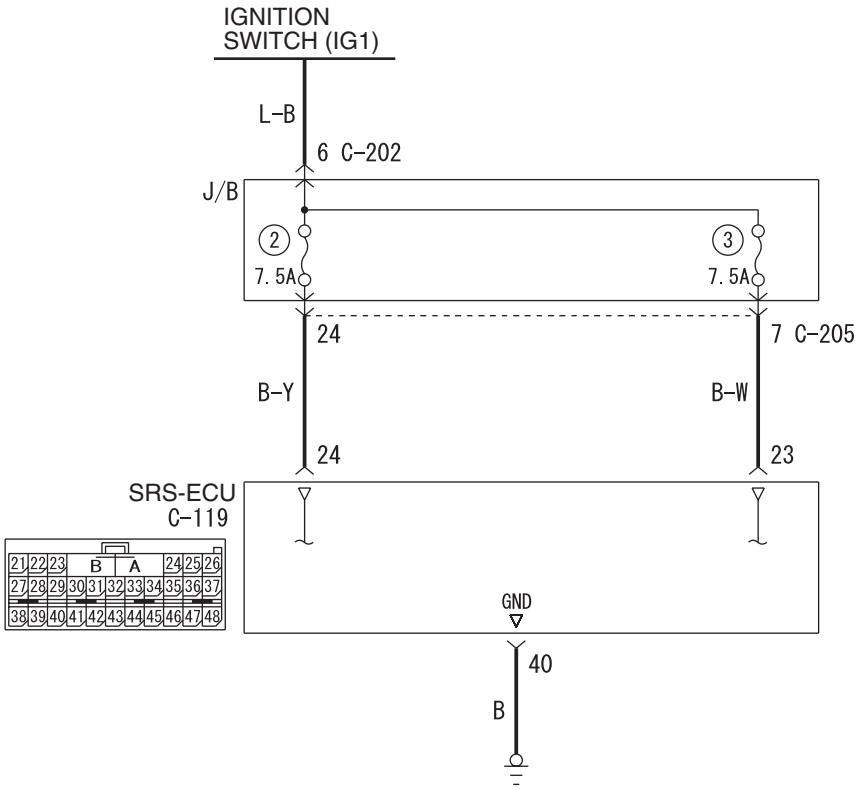

Wire colour code
B : Black LG : Light green G : Green L : Blue W : White Y : Yellow SB : Sky blue
BR : Brown O : Orange GR : Gray R : Red P : Pink V : Violet

W4X52X016A

⚠ CAUTION

If diagnosis code B1476 <Fuse No.2> or B1477 <Fuse No.3> is set in the combination meter, always diagnose the CAN bus lines.

OPERATION

- The SRS-ECU is powered from the ignition switch (IG1).
- The SRS-ECU power is supplied from two circuits. Even if one circuit is shut off, the air bag can inflate.

DIAGNOSIS CODE SET CONDITIONS

This diagnosis code is set if the voltage between the IG1 terminals (fuse No.2 circuit or fuse No.3 circuit) and earth is lower than a predetermined value for a continuous period of 5 second or more. However, if the vehicle condition returns to normal, diagnosis code number B1476 <Fuse No.2> or B1477 <Fuse No.3> will be automatically erased, and the SRS warning lamp will switch off.

PROBABLE CAUSES

- Damaged wiring harnesses or connectors
- Malfunction of the SRS-ECU

DIAGNOSIS PROCEDURE

STEP 1. M.U.T.-III CAN bus diagnostics

Use the M.U.T.-III to diagnose the CAN bus lines.

Q: Is the check result normal?

YES : Go to Step 2.

NO : Repair the CAN bus line (Refer to GROUP 54F, Diagnosis P.54F-13).

STEP 2. Check whether the diagnosis code is reset.

Check again if the diagnosis code is set.

(1) Erase the diagnosis code.

(2) Ignition: "LOCK" (OFF) position to "ON"

(3) On completion, check that the diagnosis code is not reset.

Q: Is the diagnosis code set?

YES : Go to Step 3 .

NO : There is an intermittent malfunction such as poor engaged connector(s) or open circuit (Refer to GROUP 00, How to Cope with Intermittent Malfunction P.00-5).

STEP 3. Check junction block fuse number 2 <B1476> or 3 <B1477>.

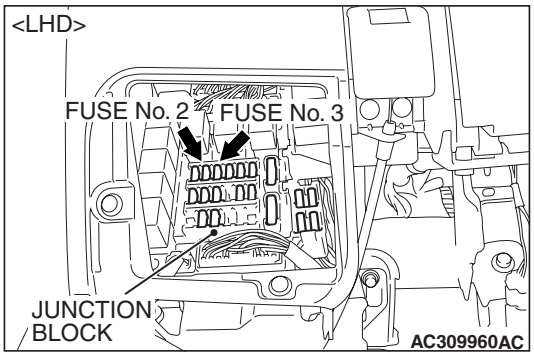

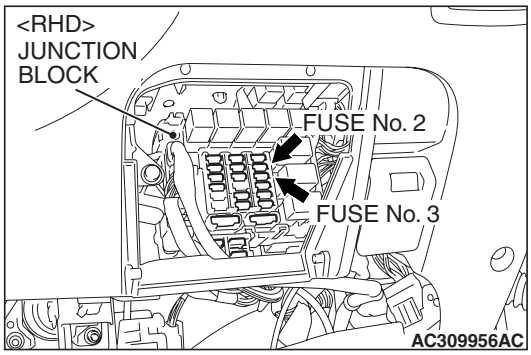

Q: Is the fuse burned out?

YES : Go to Step 6.

NO : Go to Step 4.

STEP 4. Check the power supply circuit for open circuit. Voltage measurement at SRS-ECU connector C-119.

(1) Disconnect the negative battery terminal.

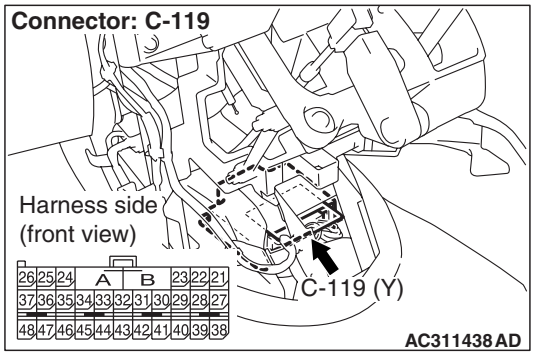

(2) Disconnect SRS-ECU connector C-119.

(3) Connect the negative battery terminal.

(4) Turn the ignition switch to the "ON" position.

⚠ CAUTION

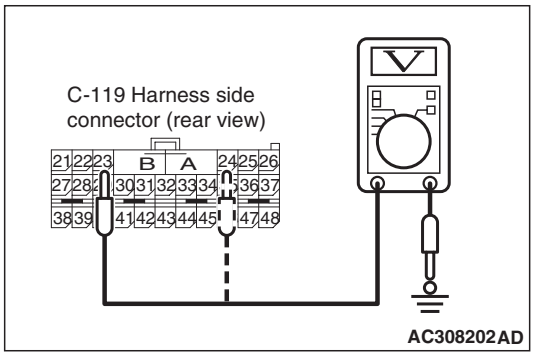

Do not insert a test probe into the terminal from its front side directly, as the connector contact pressure may be weakened.

(5) Measure the voltage between C-119 harness side connector terminal 24 <B1476> or 23 <B1477> and body earth.

OK: 9 V or more.

Q: Is the measured voltage within the specified range?

YES : Erase the diagnosis connector memory, and check the diagnosis code. If diagnosis code B1476 or B1477 set, replace the SRS-ECU (Refer to P.52B-332). Then go to Step 10.

NO : Go to Step 5.

STEP 5. Connector check: SRS-ECU connector C-119, ignition switch connector C-307, junction block connector C-202 and C-205.

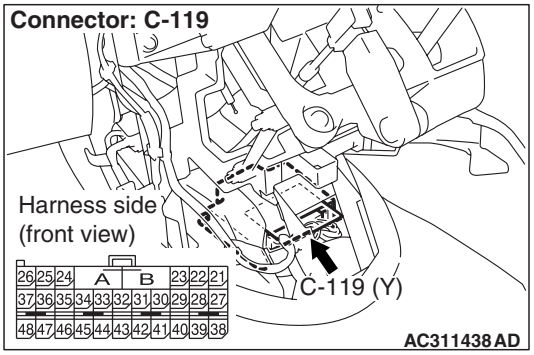

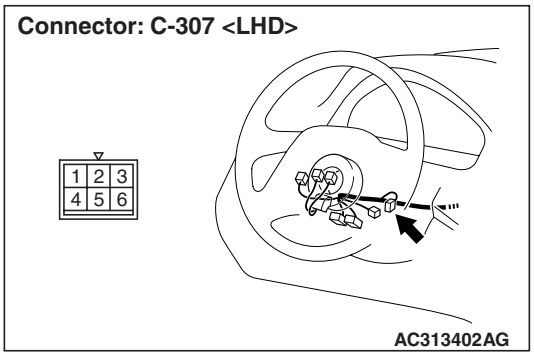

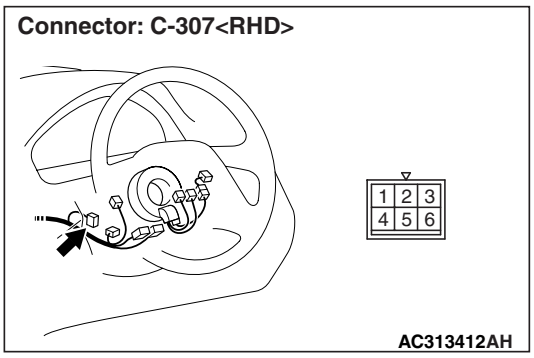

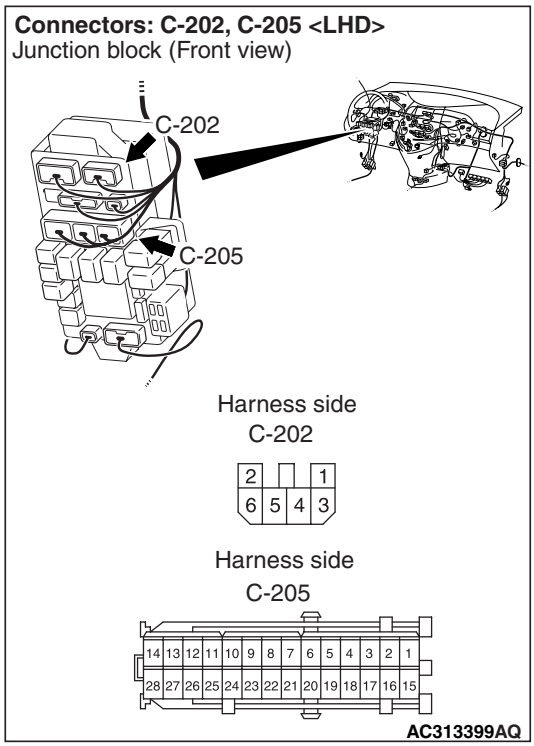

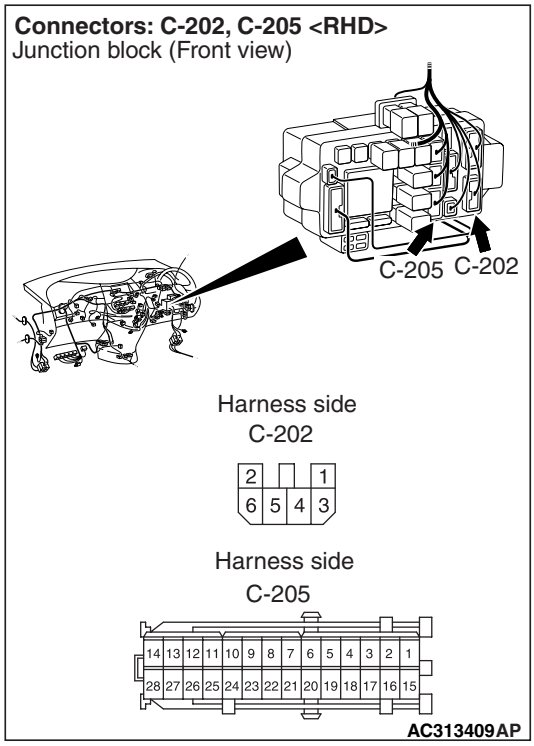

Q: Is the check result normal?

YES : Check the harness wire for open circuit between SRS-ECU connector C-119 (terminal No.24 <B1476> or terminal No.23 <B1477>) and the ignition switch connector C-307 (terminal No.2), and repair if necessary. Then go to Step 10.

NO : Repair or replace it. Then go to Step 10.

STEP 6. Check a burned-out fuse.

(1) Replace the fuse.
(2) Turn the ignition switch to the "ON" position, wait for at least one minute and then turn the ignition switch to the "LOCK" (OFF) position.
(3) Check the fuse.

Q: Is the fuse in good condition?

YES : Go to Step 10.
NO : It is possible that the circuit using fuse No.2 <B1476> or No.3 <B1477> is shorted, go to Step 7.

STEP 7. Check the SRS-ECU power supply circuit for short circuit to earth. Resistance measurement at the junction block connector C-205.

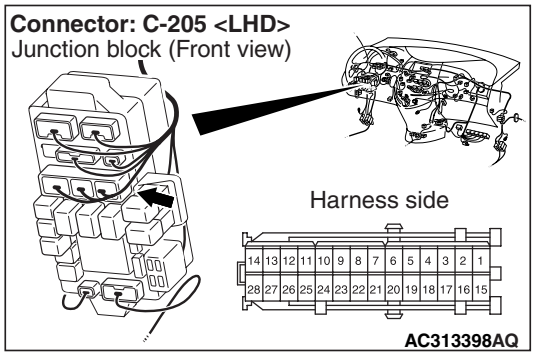

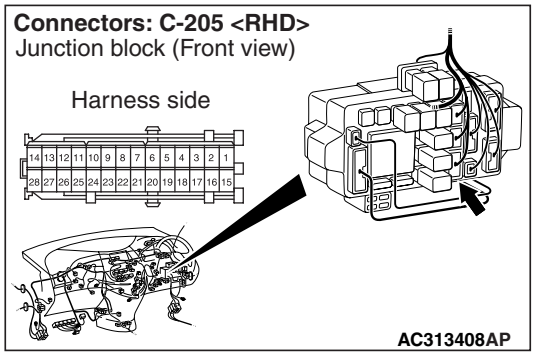

(1) Disconnect junction block connector C-205, and measure at the wiring harness side.

⚠ CAUTION

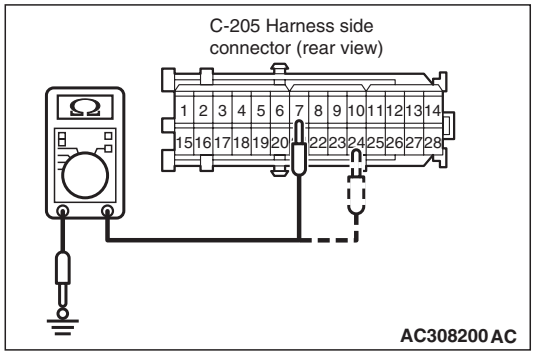

Do not insert a test probe into the terminal from its front side directly as the connector contact pressure may be weakened.

(2) Measure the resistance between terminal 24 <B1476> or 7 <B1477> and body earth.

OK: Open circuit

Q: Is the check result normal?

YES : Check the other circuit, which flows through fuse No.2 <B1476> or fuse No.3 <B1477>.Then go to Step 10.
NO : Go to Step 8.

STEP 8. Check the power supply circuit for short circuit to earth. Resistance measurement at the SRS-ECU connector C-119.

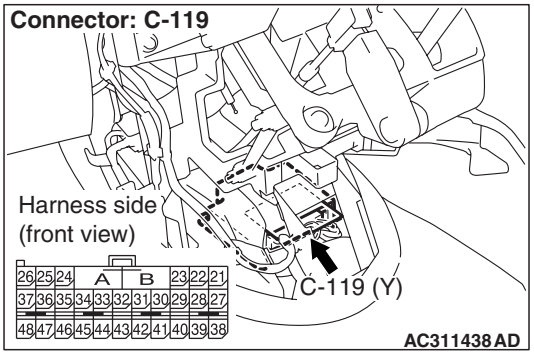

(1) Disconnect SRS-ECU connector C-119, and measure at the wiring harness side.

⚠ CAUTION

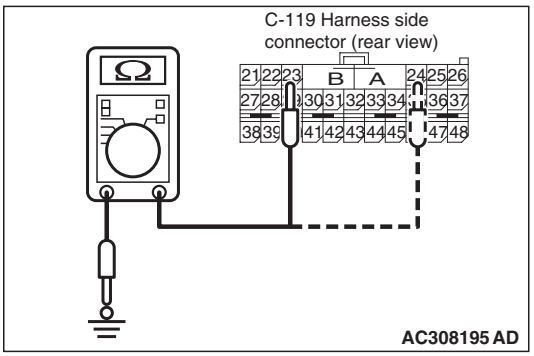

Do not insert a test probe into the terminal from its front side directly as the connector contact pressure may be weakened.

(2) Measure the resistance between terminal 24 <B1476> or 23 <B1477> and body earth.

OK: Open circuit

Q: Does continuity exist?

YES : Erase the diagnosis code memory, and check the diagnosis code. If diagnosis code B1476 or B1477 sets, replace the SRS-ECU (Refer to P.52B-332). Then go to Step 10.

NO : Go to Step 9.

Main Index
Group TOC

STEP 9. Connector check: SRS-ECU connector C-119, joint connector C-01 <LHD: B1477>, joint connector C-33 <RHD: B1477> and junction block connector C-205.

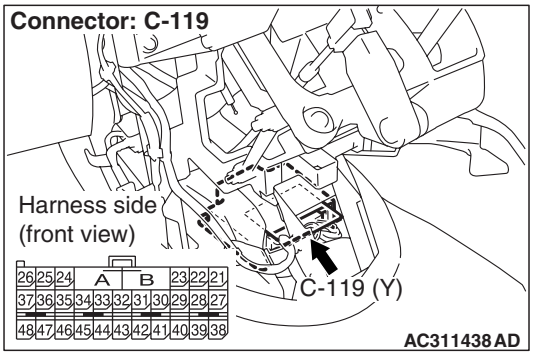

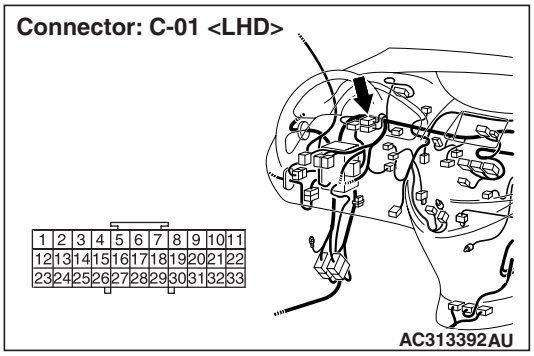

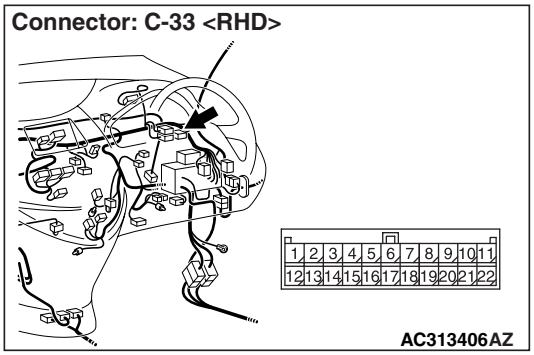

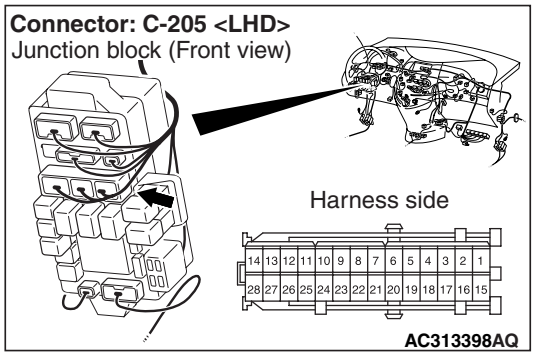

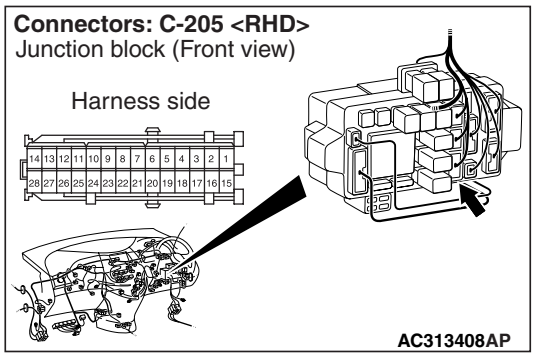

Q: Is the check result normal?

YES : Check the harness wire for short circuit between SRS-ECU connector C-119 (terminal No.24 <B1476> or terminal No.23 <B1477>) and junction block connector C-205 (terminal No.24 <B1476> or terminal No.7 <B1477>), and repair if necessary. Then go to Step 10.

NO : Repair or replace it. Then go to Step 10.

STEP 10. Check whether the diagnosis code is reset.

Q: Is diagnosis code B1476 or B1477 set?

YES : Return to Step 1.

NO : The procedure is complete.

Main Index
Group TOC

Code No. B1499: SRS-ECU Air Bag Condition Monitor Detects Deployed Air Bag

⚠ CAUTION
If diagnosis code B1499 is set in the SRS-ECU, always diagnose the CAN main bus line.

TROUBLE JUDGMENT

This diagnosis code is set after the air bag has deployed. If this diagnosis code is set before the air bag has deployed, the cause is probably a malfunction inside the SRS-ECU.

PROBABLE CAUSES

Malfunction of the SRS-ECU

DIAGNOSIS PROCEDURE

STEP 1. M.U.T.-III CAN bus diagnostics
Use the M.U.T.-III to diagnose the CAN bus lines.

Q: Is the check result normal?
YES : Go to Step 2.
NO : Repair the CAN bus line (Refer to GROUP 54F, Diagnosis P.54F-13).

STEP 2. Check whether the diagnosis code is reset.
Check again if the diagnosis code is set.
(1) Erase the diagnosis code.
(2) Ignition: "LOCK" (OFF) position to "ON"
(3) On completion, check that the diagnosis code is not reset.

Q: Is the diagnosis code B1499 set?
YES : Replace the SRS-ECU (Refer to P.52B-332).
NO : There is an intermittent malfunction such as poor engaged connector(s) or open circuit (Refer to GROUP 00, How to Cope with Intermittent Malfunction P.00-5).

Code No.B1509: Improper installation of SRS-ECU

⚠ CAUTION
If diagnosis code B1509 is set in the SRS-ECU, always diagnose the CAN main bus line.

DIAGNOSIS CODE SET CONDITIONS

This code is set when the vehicle specification does not meet the ECU specification.

PROBABLE CAUSES

- Malfunction of the SRS-ECU
- Mismatch between vehicle and SRS-ECU specifications

DIAGNOSIS PROCEDURE

STEP 1. M.U.T.-III CAN bus diagnostics
Use the M.U.T.-III to diagnose the CAN bus lines.

Q: Is the check result normal?
YES : Go to Step 2.
NO : Repair the CAN bus line (Refer to GROUP 54F, Diagnosis P.54F-13).

STEP 2. Check whether the diagnosis code is reset.
Check again if the diagnosis code is set.
(1) Erase the diagnosis code.
(2) Ignition: "LOCK" (OFF) position to "ON"
(3) On completion, check that the diagnosis code is not reset.

Q: Is the diagnosis code B1509 set?
YES : Replace the SRS-ECU (Refer to P.52B-332).
NO : There is an intermittent malfunction such as poor engaged connector(s) or open circuit (Refer to GROUP 00, How to Cope with Intermittent Malfunction P.00-5).

Main Index
Group TOC

Code No. B1519: Connector Lock System Detects Connector Unlocked

⚠ CAUTION

If diagnosis code B1519 is set in the SRS-ECU, always diagnose the CAN main bus line.

DIAGNOSIS CODE SET CONDITIONS

This diagnosis code is set if a poor connection at the SRS-ECU is detected. However, if the vehicle condition returns to normal, diagnosis code number B1519 will be automatically erased, and the SRS warning lamp will go out.

PROBABLE CAUSES

- Damaged connectors
- Malfunction of the SRS-ECU

DIAGNOSIS

STEP 1. M.U.T.-III CAN bus diagnostics

Use the M.U.T.-III to diagnose the CAN bus lines.

Q: Is the check result normal?

YES : Go to Step 2.

NO : Repair the CAN bus line (Refer to GROUP 54F, Diagnosis P.54F-13).

STEP 2. Check whether the diagnosis code is reset.

Check again if the diagnosis code is set.

(1) Erase the diagnosis code.
(2) Ignition: "LOCK" (OFF) position to "ON"
(3) On completion, check that the diagnosis code is not reset.

Q: Is the diagnosis code set?

YES : Go to Step 3.

NO : There is an intermittent malfunction such as poor engaged connector(s) or open circuit (Refer to GROUP 00, How to Cope with Intermittent Malfunction P.00-5).

STEP 3. Connector check: SRS-ECU connector C-118, C-119 and C-120.

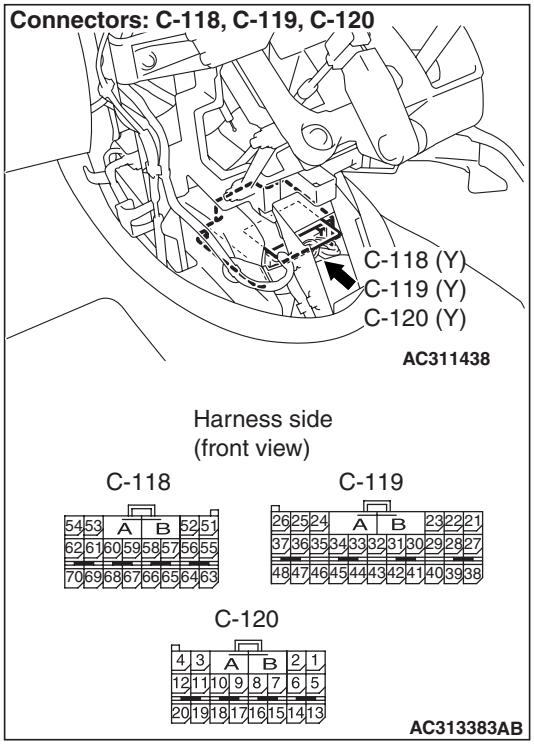

Q: Are connectors correctly engaged?

YES : Go to Step 4.

NO : Engage the connectors correctly. Then go to Step 5.

Main Index
Group TOC

STEP 4. Connector check: SRS-ECU connector C-118, C-119 and C-120.

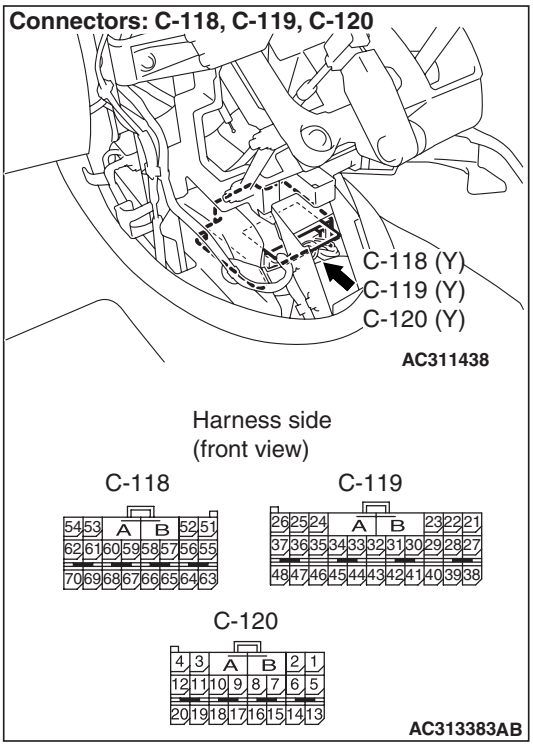

(1) Disconnect SRS-ECU connectors C-118, C-119 and C-120.

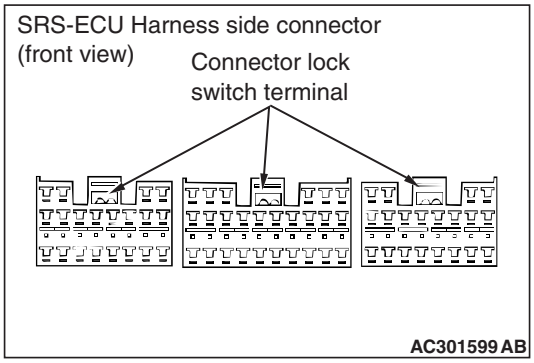

(2) Check the connector lock switch terminal inside the harness side connector for improper contact or deformation.

Q: Are the SRS-ECU connector C-118, C-119 and C-120 in good condition?

YES : . Erase the diagnosis code memory, and check the diagnosis code. If diagnosis code B1519 sets, replace the SRS-ECU (Refer to P.52B-332). Then go to Step 5.

NO : . Replace the SRS-ECU connector C-118, C-119 and C-120. Then go to Step 5.

STEP 5. Check whether the diagnosis code is reset.

Q: Is diagnosis code B1519 set?

YES : There is no action to be taken.

NO : The procedure is complete (If no malfunctions are found in all steps, an intermittent malfunction is suspected) (Refer to GROUP 00, How to Use Troubleshooting/Inspection Service Points P.00-5).

Code No.U1073: Bus Off

⚠ CAUTION
If diagnosis code U1073 is set in the SRS-ECU, diagnose the CAN main bus line.

⚠ CAUTION
Whenever the ECU is replaced, ensure that the input and output signal circuits are normal.

TROUBLE JUDGMENT

Diagnosis code No.U1073 will be stored when the SRS-ECU ceases CAN communication (bus off) and then resumes the communication by turning the ignition switch to the "LOCK" (OFF) position

COMMENTS ON TROUBLE SYMPTOM

The wiring harness wire or connectors may have loose, corroded, or damage terminals, or terminals pushed back in the connector, or the SRS-ECU may be defective.

PROBABLE CAUSES

- Defective connector(s) or wiring harness
- Malfunction of the SRS-ECU

DIAGNOSIS PROCEDURE

STEP 1. M.U.T.-III CAN bus diagnostics
Use the M.U.T.-III to diagnose the CAN bus lines.

Q: Is the check result normal?
YES : Go to Step 2 .
NO : Repair the CAN bus line (Refer to GROUP 54F, Diagnosis P.54F-13).

STEP 2. Check whether the diagnosis code is reset.
Check again if the diagnosis code is set.
(1) Erase the diagnosis code.
(2) Ignition: "LOCK" (OFF) position to "ON"
(3) On completion, check that the diagnosis code is not reset.

Q: Is the check result satisfactory?
YES : There is an intermittent malfunction such as poor engaged connector(s) or open circuit (Refer to GROUP 00, How to Use Troubleshooting/Inspection Service Points P.00-5.)
NO : Replace the SRS-ECU. On completion, check that the diagnosis code is not reset.

CHECK CHART FOR TROUBLE SYMPTOMS

M1524003400871

Trouble	Inspection procedure No.	Reference page
Communication between the M.U.T.-III and the SRS-ECU is not possible.	1	P.52B-158
Power supply circuit system	2	P.52B-159
When the ignition switch is turned to the "ON" position (engine stopped), the SRS warning lamp does not illuminate.	3	P.52B-162
After the ignition switch is turned to the "ON" position, the SRS warning lamp does not go off within approximately seven seconds.	4	P.52B-162

Main Index
Group TOC

SYMPTOM PROCEDURES

INSPECTION PROCEDURE 1: Communication between M.U.T.-III and the SRS-ECU is not possible.

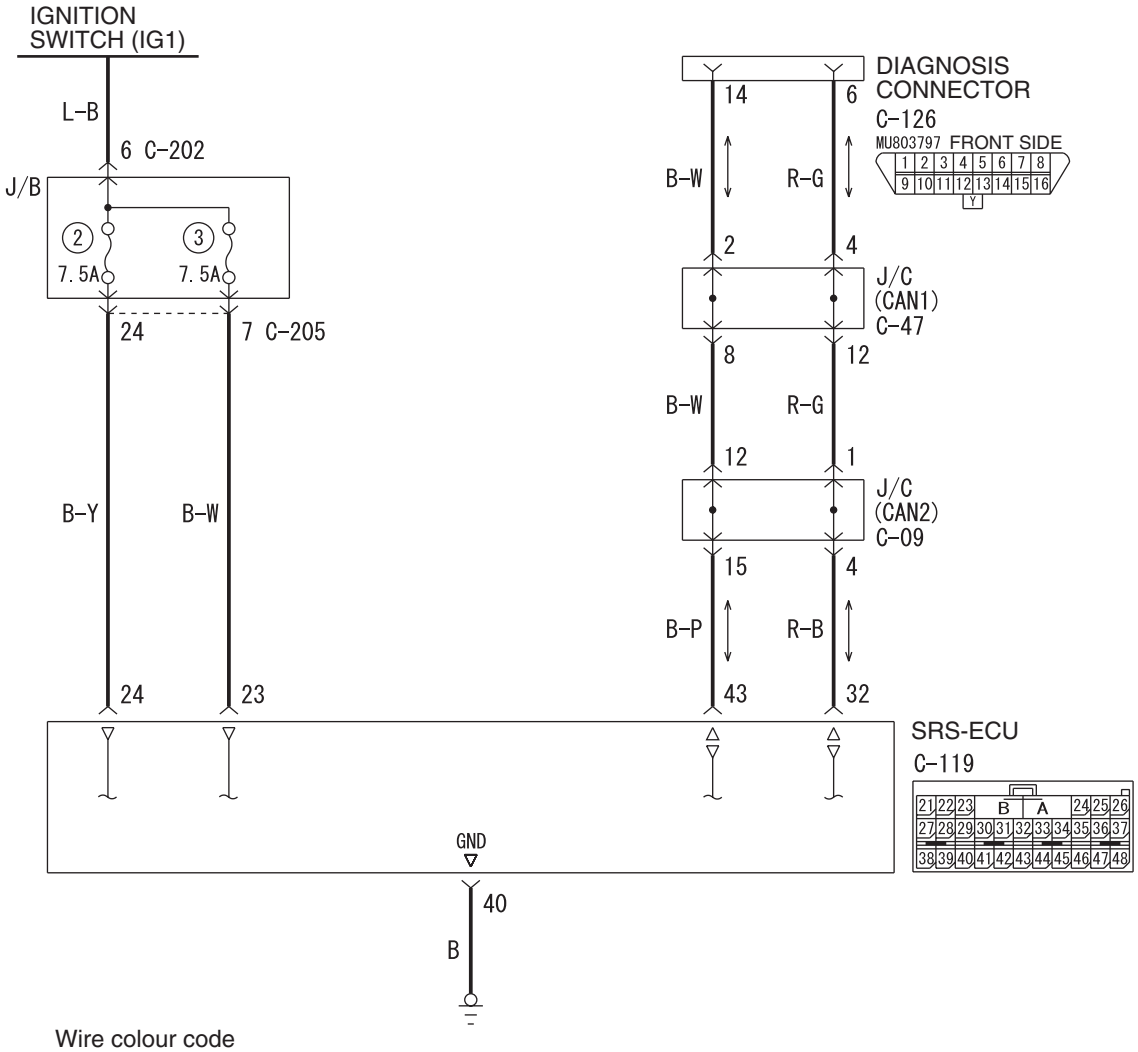

Wire colour code
B : Black LG : Light green G : Green L : Blue W : White Y : Yellow SB : Sky blue
BR : Brown O : Orange GR : Grey R : Red P : Pink V : Violet PU : Purple

W6X52X001A

COMMENTS ON TROUBLE SYMPTOM

If the M.U.T.-III can not communicate with the SRS system, the CAN bus lines may be defective. If the SRS system does not work, the SRS-ECU or its power supply circuit may be defective.

PROBABLE CAUSES

- Damaged wiring harness or connector
- Malfunction of the SRS-ECU

DIAGNOSIS PROCEDURE

STEP 1. M.U.T.-III CAN bus diagnostics

Use the M.U.T.-III to diagnose the CAN bus lines.

Q: Is the check result normal?

YES : Check and repair the power supply circuit system (Refer to P.52B-159).

NO : Repair the CAN bus lines (Refer to GROUP 54F, Diagnosis P.54F-13).

Main Index
Group TOC

INSPECTION PROCEDURE 2: Power Supply Circuit System

IG1 Power Supply Circuit

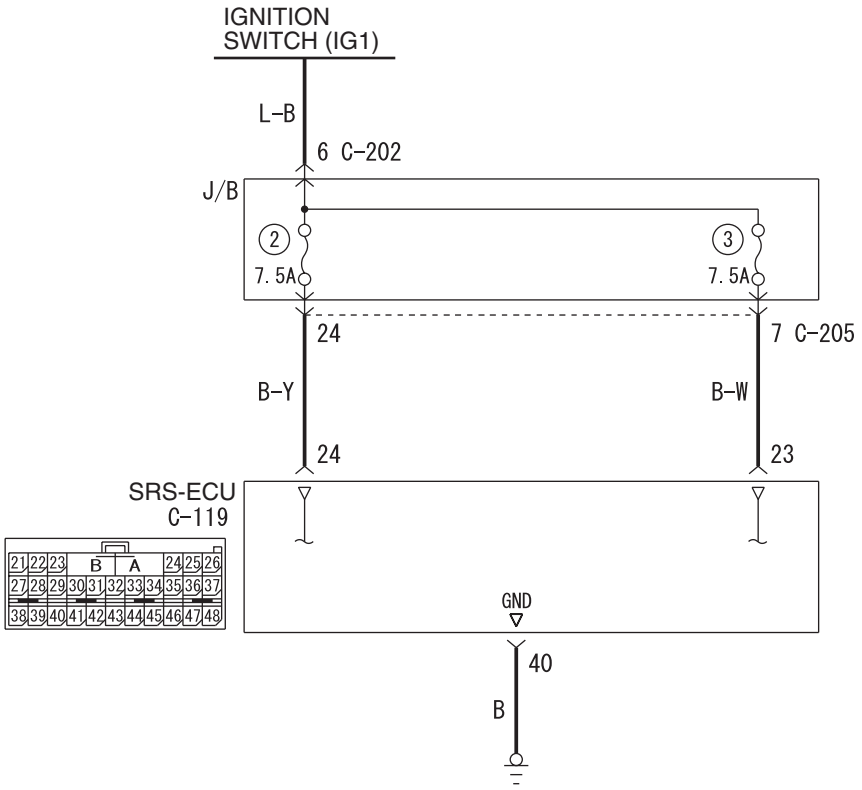

Wire colour code
B : Black LG : Light green G : Green L : Blue W : White Y : Yellow SB : Sky blue
BR : Brown O : Orange GR : Gray R : Red P : Pink V : Violet

W4X52X016A

OPERATION

- The SRS-ECU is energized by the ignition switch (IG1) through multi-purpose fuse 2 and the SRS-ECU terminal 24 and multi-purpose fuse 3 and the SRS-ECU terminal 23.
- If the power supply to the SRS-ECU has failed, M.U.T.-III will not be able to communicate with it.

PROBABLE CAUSES

- Damaged wiring harness or connector
- Defective battery
- Charging system failed
- Malfunction of the SRS-ECU

Main Index
Group TOC

DIAGNOSIS PROCEDURE

STEP 1. Resistance measurement at SRS-ECU connector C-119.

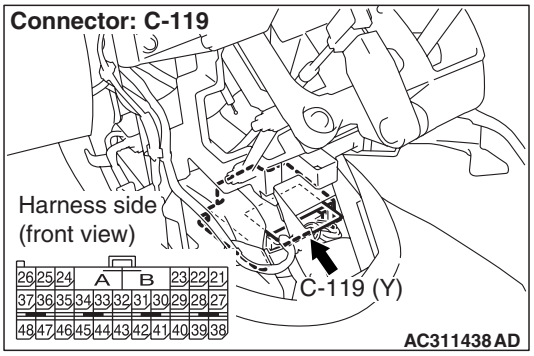

(1) Disconnect the connector C-119.

⚠ CAUTION

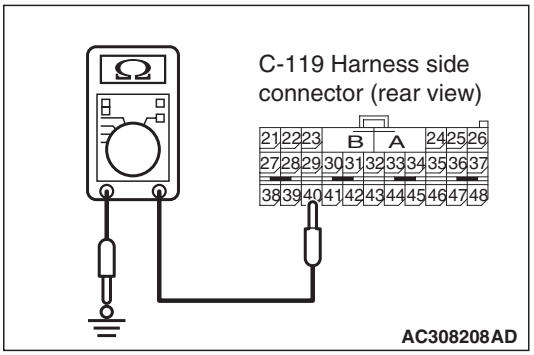

Do not insert a test probe into the terminal from its front side directly, as the connector contact pressure may be weakened.

(2) Check for continuity between C-119 harness side connector terminals 40 and body earth.

OK: Less than 2 Ω

Q: Is the check results normal?

YES : Then go to Step 2 .

NO : Repair the wiring harness between SRS-ECU connector C-119 terminals 40 and the body earth.

STEP 2. Check the harness wires for short circuit to earth between SRS-ECU connector C-119 (terminal No.23 and 24) and ignition switch connector C-307 (terminal No.2).

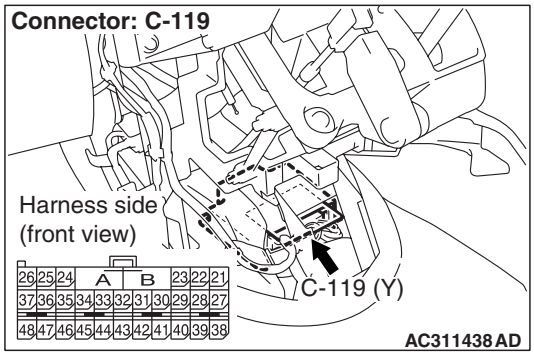

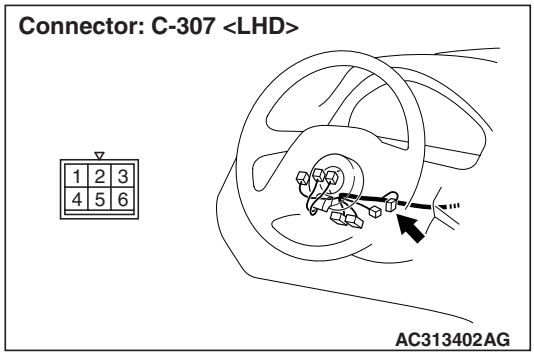

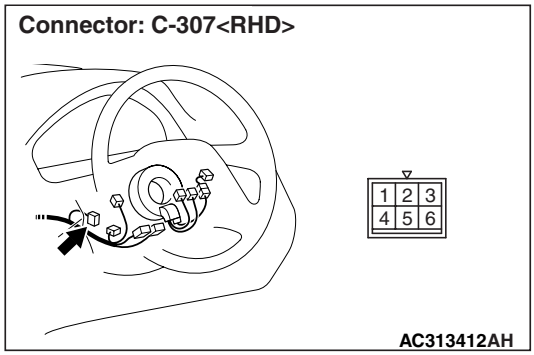

Main Index
Group TOC

NOTE:

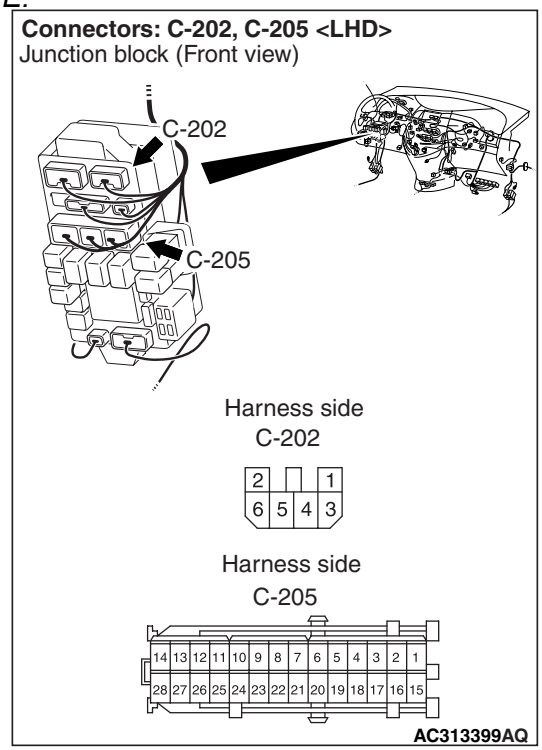

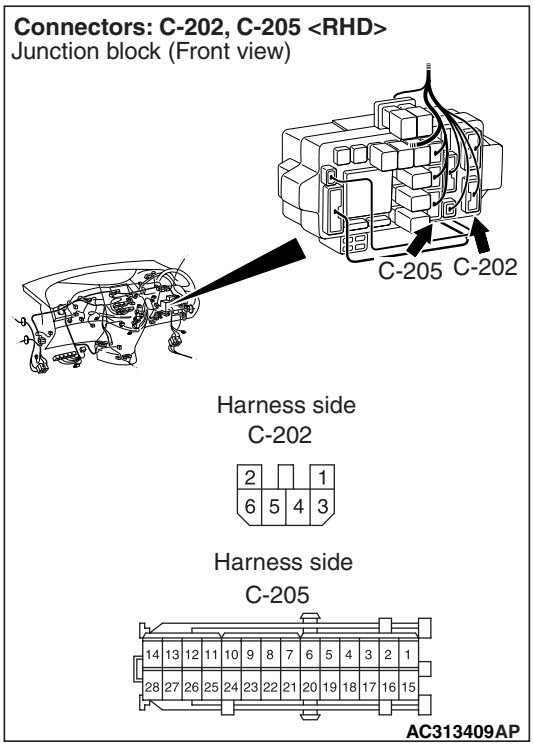

After inspecting intermediate connectors C-202 and C-205 inspect the wiring harness. If intermediate connectors C-202 and C-205 are damaged, repair or replace them. Then go to Step 3 .

Q: Are the harness wires between SRS-ECU connector C-119 (terminal No.23 and 24) and ignition switch connector C-307 (terminal No.2) in good condition?

YES : Go to Step 3 .

NO : Replace the harness wires between SRS-ECU connector C-119 and ignition switch connector C-307.

STEP 3. Retest the system.

Q: Can the SRS-ECU communicate with the M.U.T.-III?

YES : It can be assumed that this malfunction is intermittent (Refer to GROUP 00, How to Use Troubleshooting/Inspection Service Points –How to Cope with Intermittent Malfunction P.00-5).

NO : Replace the SRS-ECU (Refer to P.52B-332).

Main Index
Group TOC

INSPECTION PROCEDURE 3: When the Ignition Switch is Turned to "ON" Position (Engine Stopped), the SRS Warning Lamp does not Illuminate.
INSPECTION PROCEDURE 4: After the Ignition Switch is Turned to the "ON" Position, the SRS Warning Lamp does not Go Off within Approximately Seven Seconds

SRS Warning Lamp Circuit

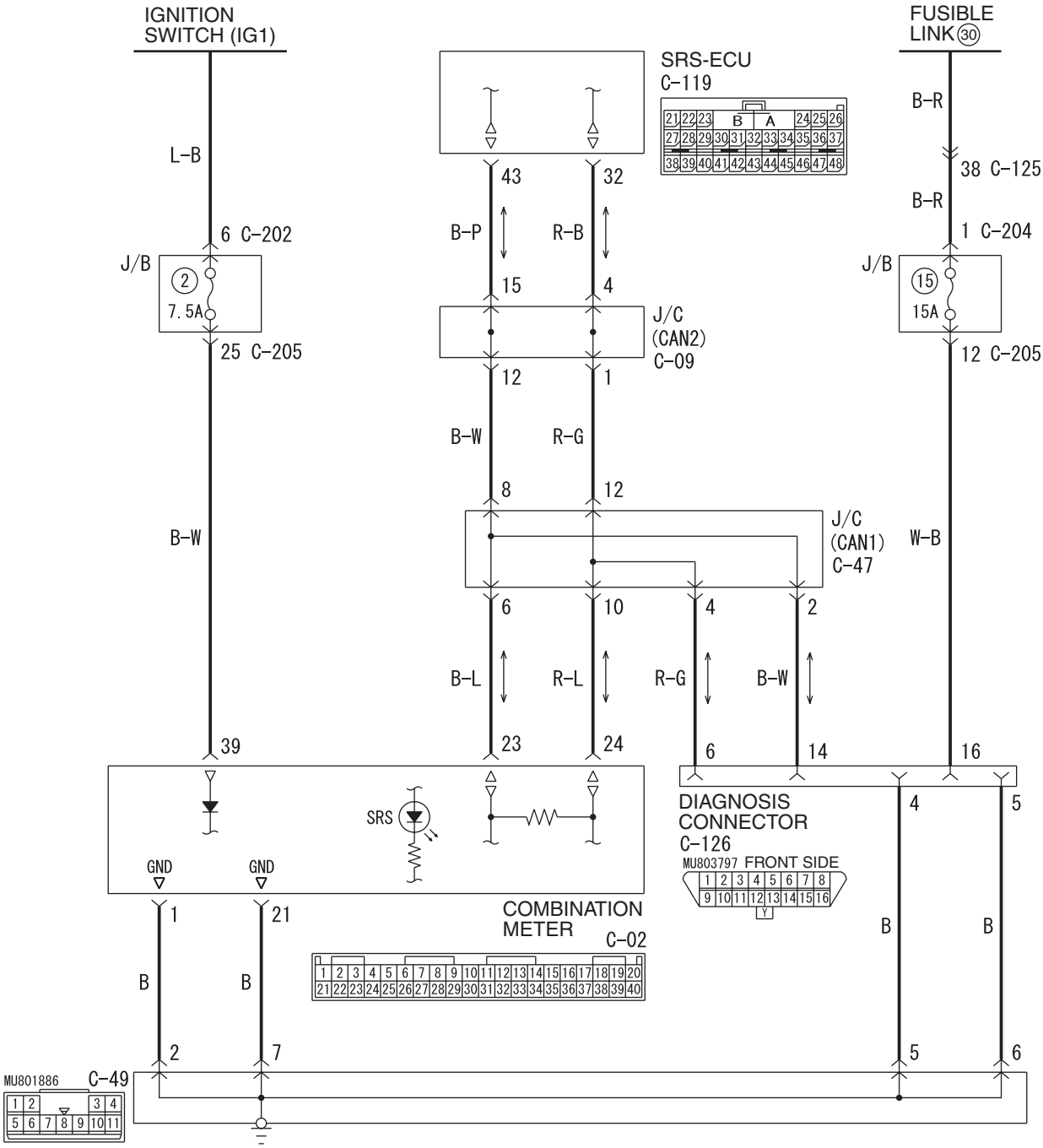

Wire colour code
B : Black LG : Light green G : Green L : Blue W : White Y : Yellow SB : Sky blue
BR : Brown O : Orange GR : Grey R : Red P : Pink V : Violet PU : Purple

W6X52X000A

Main Index
Group TOC

TECHNICAL DESCRIPTION (COMMENT)

- The SRS-ECU sends the SRS warning lamp signal to the combination meter via the CAN communication.
- This may be caused by faults in the CAN bus line, the combination meter or the SRS-ECU.

PROBABLE CAUSES

- Damaged wiring harness or connector
- Combination meter defect
- Malfunction of the SRS-ECU

DATA LIST REFERENCE TABLE

M1524003500157

The following items can be read by the M.U.T.-III from the ABS-ECU input data.

No.	Data list item	Check conditions	Normal conditions
01	Failure continuation time 1	Always	Maximum time to be stored: 9,999 minutes (approximately seven days)
02	Failure continuation time 2	Always	
10	Elimination times	Always	Maximum time to be stored: 255 times

ACTUATOR TEST REFERENCE TABLE

M1524003600132

The M.U.T.-III activates the following actuators for testing.

M.U.T.-III display	Item No.	Item	Parts to be activated
SRS Warning Lamp	01	The SRS warning lamp illuminates.	CAN output

DIAGNOSIS PROCEDURE

STEP 1. M.U.T.-III CAN bus diagnostics

Use the M.U.T.-III to diagnose the CAN bus lines.

Q: Is the check result normal?

YES : Replace the SRS-ECU (Refer toP.52B-332).

NO : Repair the CAN bus lines (Refer to GROUP 54F, Diagnosis P.54F-13).

TROUBLESHOOTING <Vehicles with dual stage air bags>

DIAGNOSIS TROUBLESHOOTING FLOW

M1524003100546

Refer to GROUP 00, How to Use Troubleshooting/Inspection Service PointsP.00-5.

DIAGNOSIS FUNCTION

M1524003200468

HOW TO READ DIAGNOSIS CODE

Refer to GROUP 00, How to Use Troubleshooting/Inspection Service Points P.00-5.

HOW TO ERASE DIAGNOSIS CODE

Refer to GROUP 00, How to Use Troubleshooting/Inspection Service Points P.00-5.

SRS WARNING LAMP CHECK

M1524004300491

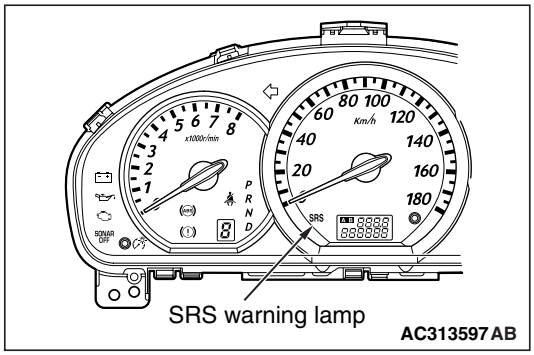

1. Check that the SRS warning lamp comes on when the ignition switch is turned ON.
2. Check that the SRS warning lamp illuminates for about 7 seconds and then goes out.
3. If this is not the cause, check the diagnosis codes.

Main Index
Group TOC

CHECK CHART FOR DIAGNOSIS CODES

M1524003301015

Inspect according to the inspection chart that is appropriate for the diagnosis code.

Code No.	Diagnosis item	Reference Page
B1400*3	Driver's air bag module (1st squib) system fault 1 (short circuit between terminals of the squib circuit)	P.52B-169
B1401*3	Driver's air bag module (1st squib) system fault 2 (open in the squib circuit)	P.52B-175
B1402*3	Driver's air bag module (1st squib) system fault for earth circuit (short-circuited to earth)	P.52B-179
B1403*3	Driver's air bag module (1st squib) system fault for power supply circuit (short-circuited to power supply)	P.52B-183
B1404*4	Driver's air bag module (1st squib ignition drive circuit) system detected short circuit	P.52B-187
B1405*4	Driver's air bag module (1st squib ignition drive circuit) system detected open circuit	P.52B-187
B1406*4	Front impact sensor (RH) system for fault 1	P.52B-190
B1407*3	Front impact sensor (RH) power supply circuit system	P.52B-191
B1408*3	Front impact sensor (RH) (squib) for power supply circuit	P.52B-193
B1409*3	Front impact sensor (RH) (squib) for communication system	P.52B-193
B1410*3	Passenger's (front) air bag module (1st squib) system fault 1 (short circuit between terminals of the squib circuit)	P.52B-195
B1411*3	Passenger's (front) air bag module (1st squib) system fault 2 (open in the squib circuit)	P.52B-201
B1412*3	Passenger's (front) air bag module (1st squib) system fault for earth circuit (short-circuited to earth)	P.52B-204
B1413*3	Passenger's (front) air bag module (1st squib) system fault for power supply circuit (short-circuited to power supply)	P.52B-207
B1414*4	Passenger's (front) air bag module (1st squib ignition drive circuit) system detected short circuit	P.52B-187
B1415*4	Passenger's (front) air bag module (1st squib ignition drive circuit) system detected open circuit	P.52B-187
B1416*4	Front impact sensor (LH) system for fault 1	P.52B-190
B1417*3	Front impact sensor (LH) power supply circuit system	P.52B-210
B1418*3	Front impact sensor (LH) (squib) for power supply circuit	P.52B-212
B1419*3	Front impact sensor (LH) (squib) for communication system	P.52B-212
B1420*3	Side-airbag module (RH) (squib) system fault 1 (short circuit between terminals of the squib circuit)	P.52B-214
B1421*3	Side-airbag module (RH) (squib) system fault 2 (open in the squib circuit)	P.52B-217
B1422*3	Side-airbag module (RH) (squib) system fault earth circuit (short-circuited to earth)	P.52B-220
B1423*3	Side-airbag module (RH) (squib) system fault power supply circuit (short-circuited to power supply)	P.52B-222

Main Index
Group TOC

Code No.	Diagnosis item	Reference Page
B1424*4	Side-airbag module (RH) (squib) system detected short circuit	P.52B-187
B1425*4	Side-airbag module (RH) (squib) system detected open circuit	P.52B-187
B1426*4	Side impact sensor (front) (RH) system for fault 1	P.52B-225
B1427*3	Side impact sensor (front) (RH) power supply circuit system	P.52B-226
B1428*3	Side impact sensor (front) (RH) (squib) for power supply circuit	P.52B-228
B1429*3	Side impact sensor (front) (RH) (squib) for communication system	P.52B-228
B1430*3	Side-airbag module (LH) (squib) system fault 1 (short circuit between terminals of the squib circuit)	P.52B-230
B1431*3	Side-airbag module (LH) (squib) system fault 2 (open in the squib circuit)	P.52B-233
B1432*3	Side-airbag module (LH) (squib) system fault earth circuit (short-circuited to earth)	P.52B-236
B1433*3	Side-airbag module (LH) (squib) system fault power supply circuit (short-circuited to power supply)	P.52B-238
B1434*4	Side-airbag module (LH) (squib) system detected short circuit	P.52B-187
B1435*4	Side-airbag module (LH) (squib) system detected open circuit	P.52B-187
B1436*4	Side impact sensor (front) (LH) system for fault 1	P.52B-225
B1437*3	Side impact sensor (front) (LH) power supply circuit system	P.52B-240
B1438*3	Side impact sensor (front) (LH) (squib) for power supply circuit	P.52B-242
B1439*3	Side impact sensor (front) (LH) (squib) for communication system	P.52B-242
B1440*3	Curtain air bag module (squib) (RH) system (short-circuited between terminals of the squib circuit)	P.52B-244
B1441*3	Curtain air bag module (squib) (RH) system (open-circuited in the squib circuit)	P.52B-248
B1442*3	Curtain air bag module (squib) (RH) system (short-circuited to the earth)	P.52B-251
B1443*3	Curtain air bag module (squib) (RH) system (short-circuited to the power supply)	P.52B-253
B1444*4	Curtain air bag module (RH) (squib) system detected short circuit	P.52B-187
B1445*4	Curtain air bag module (RH) (squib) system detected open circuit	P.52B-187
B1446*4	Side impact sensor (rear) (RH) system for fault 1	P.52B-256
B1447*3	Side impact sensor (rear) (RH) power supply circuit system	P.52B-257
B1448*3	Side impact sensor (rear) (RH) (squib) for power supply circuit	P.52B-259

Main Index
Group TOC

Code No.	Diagnosis item	Reference Page
B1449*3	Side impact sensor (rear) (RH) (squib) for communication system	P.52B-259
B1450*3	Curtain air bag module (squib) (LH) system (short-circuited between terminals of the squib circuit)	P.52B-261
B1451*3	Curtain air bag module (squib) (LH) system (open-circuited in the squib circuit)	P.52B-265
B1452*3	Curtain air bag module (squib) (LH) system (short-circuited to the earth)	P.52B-268
B1453*3	Curtain air bag module (squib) (LH) system (short-circuited to the power supply)	P.52B-270
B1454*4	Curtain air bag module (LH) (squib) system detected short circuit	P.52B-187
B1455*4	Curtain air bag module (LH) (squib) system detected open circuit	P.52B-187
B1456*4	Side impact sensor (rear) (LH) system for fault 1	P.52B-256
B1457*3	Side impact sensor (rear) (LH) power supply circuit system	P.52B-273
B1458*3	Side impact sensor (rear) (LH) (squib) for power supply circuit	P.52B-275
B1459*3	Side impact sensor (rear) (LH) (squib) or communication system	P.52B-275
B1460*3	Seat belt pre-tensioner (RH) (squib) system fault 1 (short circuit between terminals of the squib circuit)	P.52B-277
B1461*3	Seat belt pre-tensioner (RH) (squib) system fault 2 (open in the squib circuit)	P.52B-281
B1462*3	Seat belt pre-tensioner (RH) (squib) system fault for earth circuit (short-circuit to earth)	P.52B-283
B1463*3	Seat belt pre-tensioner (RH) (squib) system fault for power supply circuit (short-circuited to power supply)	P.52B-286
B1464*4	Seat belt pre-tensioner (RH) (squib ignition drive circuit) system detected short circuit	P.52B-187
B1465*4	Seat belt pre-tensioner (RH) (squib ignition drive circuit) system detected open circuit	P.52B-187
B1466*4	Analog G-sensor system in the SRS-ECU	P.52B-187
B1467*4	Safing G-sensor open circuit	P.52B-187
B1468*4	Safing G-sensor short circuit	P.52B-187
B1469*4	Safing G-sensor for side-airbag faults	P.52B-187
B1470*3	Seat belt pre-tensioner (LH) (squib) system fault 1 (short circuit between terminals of the squib circuit)	P.52B-288
B1471*3	Seat belt pre-tensioner (LH) (squib) system fault 2 (open in the squib circuit)	P.52B-292
B1472*3	Seat belt pre-tensioner (LH) (squib) system fault for earth circuit (short-circuited to earth)	P.52B-295
B1473*3	Seat belt pre-tensioner (LH) (squib) system fault for power supply circuit (short-circuit to power supply)	P.52B-297

Main Index
Group TOC

Code No.	Diagnosis item	Reference Page
B1474*4	Seat belt pre-tensioner (LH) (squib ignition drive circuit) system detected short circuit	P.52B-187
B1475*4	Seat belt pre-tensioner (LH) (squib ignition drive circuit) system detected open circuit	P.52B-187
B1476*2	IG1 power supply circuit system (fuse No.2 circuit)	P.52B-300
B1477*2	IG1 power supply circuit system (fuse No.3 circuit)	P.52B-300
B1478*4	SRS-ECU capacitor circuit voltage too high	P.52B-187
B1479*4	SRS-ECU capacitor circuit voltage too low	P.52B-187
B1480*3	Driver’s air bag module (2nt squib) system fault 1 (short circuit between terminals of the squib circuit)	P.52B-169
B1481*3	Driver's air bag module (2nt squib) system fault 2 (open in the squib circuit)	P.52B-175
B1482*3	Driver’s air bag module (2nt squib) system fault for earth circuit (short-circuited to earth)	P.52B-179
B1483*3	Driver's air bag module (2nt squib) system fault for power supply circuit (short-circuited to power supply)	P.52B-183
B1484*4	Driver's air bag module (2nd squib ignition drive circuit) system detected short circuit	P.52B-187
B1485*4	Driver's air bag module (2nd squib ignition drive circuit) system detected open circuit	P.52B-187
B1490*3	Passenger’s (front) air bag module (2nt squib) system fault 1 (short circuit between terminals of the squib circuit)	P.52B-195
B1491*3	Passenger’s (front) air bag module (2nt squib) system fault 2 (open in the squib circuit)	P.52B-201
B1492*3	Passenger’s (front) air bag module (2nt squib) system fault for earth circuit (short-circuited to earth)	P.52B-204
B1493*3	Passenger’s (front) air bag module (2nt squib) system fault for power supply circuit (short-circuited to power supply)	P.52B-207
B1494*4	Passenger's (front) air bag module (2nd squib ignition drive circuit) system detected short circuit	P.52B-187
B1495*4	Passenger's (front) air bag module (2nd squib ignition drive circuit) system detected open circuit	P.52B-187
B1496*4	SRS-ECU non-volatile memory (EEPROM)	P.52B-187
B1497*4	SRS-ECU application specific integrated (for frontal activation)	P.52B-187
B1498*4	SRS-ECU ROM or RAM	P.52B-187
B1499*4	SRS-ECU air bag condition monitor detects deployed air bag	P.52B-306
B1506*3	Seat slide sensor system fault 1 (open in the seat slide sensor circuit)	P.52B-307
B1507*3	Seat slide sensor system fault earth circuit (short-circuited to earth)	P.52B-309
B1508*3	Seat slide sensor system fault power supply circuit (short-circuited to power supply)	P.52B-311

Main Index
Group TOC

Code No.	Diagnosis item	Reference Page
B1509*2	Improper installation of SRS-ECU	P.52B-313
B1519*3	Connector lock system detects connector unlocked	P.52B-313
B1548*3	CAN communication malfunction	P.52B-187
B1549*3	CAN communication error	P.52B-187
B1552*4	Changing circuit shorted	P.52B-187
B1553*4	Changing circuit open	P.52B-187
B1554*4	SG BY-PASS circuit malfunction	P.52B-187
B1555*4	SG BY-PASS circuit (field effect transistor) open	P.52B-187
B1556*3	Seat slide sensor system for fault 2 (malfunction of seat slide sensor)	P.52B-315
B1557*4	SRS-ECU application specific integrated	P.52B-187
U1073*2	Bus-off	P.52B-316

NOTE:

- **1: Electrically Erasable Programmable ROM*
- **2: This diagnosis code will remain in memory and the SRS warning lamp will be switched off when the system returns to normal condition.*
- **3: This diagnosis code will remain in memory and the SRS warning lamp will be switched on even if the system returns to normal condition.*
- **4: This diagnosis code cannot be erased by "Erase diagnosis codes" function.*

Main Index
Group TOC

DIAGNOSTIC TROUBLE CODE PROCEDURES

Code No.B1400: Driver's Air Bag Module (1st Squib) System Fault 1 (Short Circuit between Terminals of the Squib Circuit)
Code No.B1480: Driver's Air Bag Module (2nd Squib) System Fault 1 (Short Circuit between Terminals of the Squib Circuit)

Driver's Air Bag Module (1st and 2nd Squib) Circuit

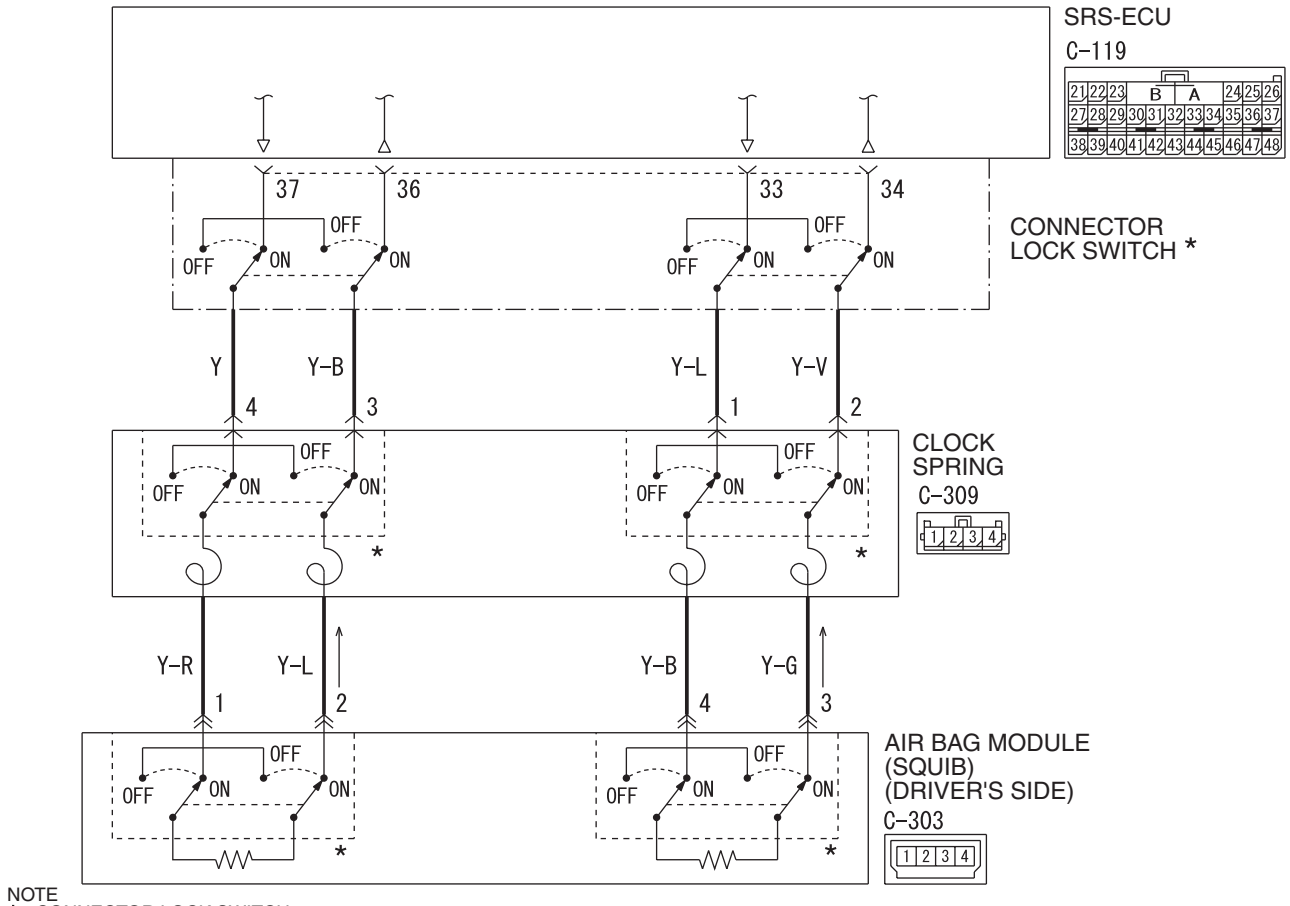

NOTE
* : CONNECTOR LOCK SWITCH
CONNECTOR CONNECTED: ON
CONNECTOR DISCONNECTED: OFF

Wire colour code
B : Black LG : Light green G : Green L : Blue W : White Y : Yellow SB : Sky blue
BR : Brown O : Orange GR : Gray R : Red P : Pink V : Violet

W4X52E002A

Main Index
Group TOC

⚠ CAUTION

If diagnosis code B1400 <1st squib> or B1480 <2nd squib> is set in the SRS-ECU, always diagnose the CAN bus lines.

OPERATION

- The SRS-ECU judges how severe a collision is by detecting signals from the front impact sensors and the front air bag analog G-sensor. If the impact is over a predetermined level, the SRS-ECU sends an ignition signal. At this time, if the front air bag safing G-sensor is on, the SRS air bag will inflate.
- The ignition signal is input to the air bag module via the clock spring to inflate the air bag.

DIAGNOSIS CODE SET CONDITIONS

- This diagnosis code is set if there is abnormal resistance between the input terminals of the driver's side air bag module (squib). The most likely causes for this code to be set are the followings:
  - Short circuit in driver’s air bag module (squib) or harness
  - Short circuit in the clock spring

However, if no diagnosis code reset, the SRS warning lamp will be turned off (diagnosis code will OK).

PROBABLE CAUSES

- Improper engaged connector or defective short spring*
- Short circuit in the clock spring
- Short circuit between the driver's air bag module (squib) circuit terminals
- Damaged connector(s)
- Malfunction of the SRS-ECU

*NOTE: *: The squib circuit connectors integrate a "short" spring (which prevents the air bag from deploying unintentionally due to static electricity by shorting the positive wire to the earth wire in the squib circuit when the connectors are disconnected). (Refer to P.52B-3). Therefore, if connector C-119, C-309 or C-303 is damaged or improperly engaged, the short spring may not be released when the connector is connected.*

DIAGNOSIS PROCEDURE

STEP 1. M.U.T.-III CAN bus diagnostics

Use the M.U.T.-III to diagnose the CAN bus lines.

Q: Is the check result normal?

YES : Go to Step 2 .

NO : Repair the CAN bus line (Refer to GROUP 54F, Diagnosis P.54F-13).

STEP 2. Check whether the diagnosis code is reset.

Check again if the diagnosis code is set.

(1) Erase the diagnosis code.
(2) Ignition: "LOCK" (OFF) position to "ON"
(3) On completion, check that the diagnosis code is not reset.

Q: Is the diagnosis code set?

YES : Go to Step 3 .

NO : There is an intermittent malfunction such as poor engaged connector(s) or open circuit (Refer to GROUP 00, How to Cope with Intermittent Malfunction P.00-5).

STEP 3. M.U.T.-III diagnosis code

⚠ CAUTION

To prevent damage to M.U.T.-III, always turn the ignition switch to the "LOCK" (OFF) position before connecting or disconnecting M.U.T.-III.

(1) Turn the ignition switch to the "ON" position.
(2) Check if the diagnosis code is set.
(3) Turn the ignition switch to the "LOOK" (OFF) position.

Q: Is diagnosis code B1519 set?

YES : Go to Step 4 .

NO : Go to Step 5 .

STEP 4. Connector check: SRS-ECU connector C-119.

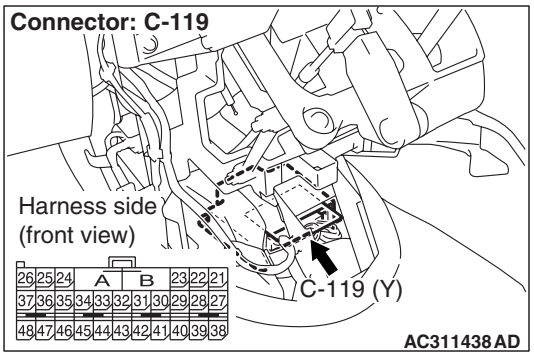

Q: Is the connector correctly engaged?
YES : Go to Step 5 .
NO : Engage the connector correctly. Then go to Step 10 .

STEP 5. Connector check: SRS-ECU connector C-119, clock spring connector C-309 and driver's air bag module connector C-303 (M.U.T.-III diagnosis code).

(1) Disconnect the negative battery terminal.

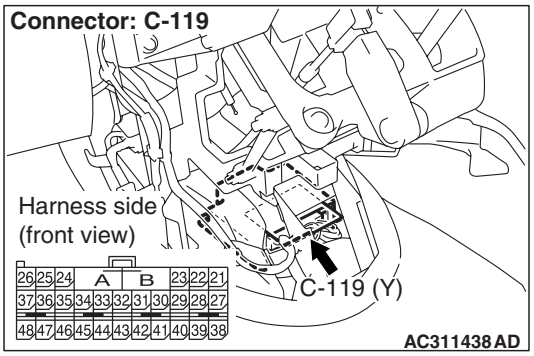

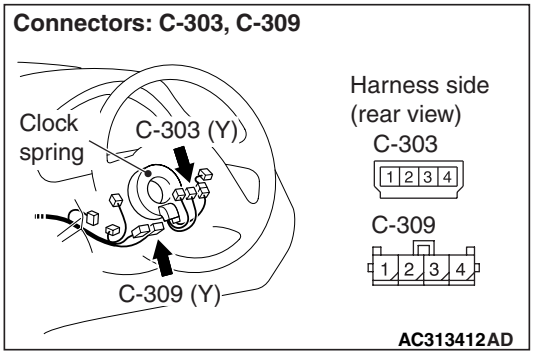

(2) Disconnect connectors C-119, C-309 and C-303, and then reconnect them.
(3) Connect the negative battery terminal.
(4) Erase the diagnosis code memory, and check the diagnosis code.

Q: Is diagnosis code B1400 <1st squib> or B1480 <2nd squib> set?
YES : Go to Step 6 .
NO : The procedure is complete. It is assumed that diagnosis code B1400 <1st squib> or B1480 <2nd squib> set because connector C-119, C-309 or C-303 was engaged improperly.

STEP 6. Check the driver's air bag module. (M.U.T.-III diagnosis code.)

(1) Disconnect the negative battery terminal.

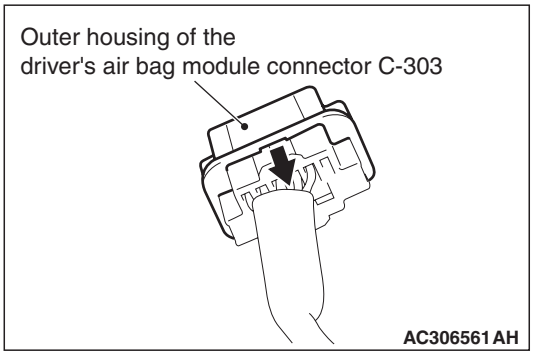

(2) Slide the outer housing of the clock spring side of driver's air bag module connector C-303 in the arrow direction shown, and disconnect the connector.

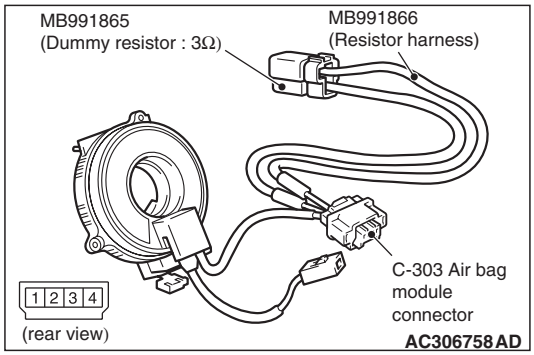

(3) Connect special tool dummy resistor (MB991865) to special tool resistor harness (MB991866).

⚠ CAUTION

Do not insert a test probe into the terminal from its front side directly as the connector contact pressure may be weakened.

(4) Insert special tool MB991866 into clock spring side of driver's air bag module connector C-303 (terminal No.1 and 2 <1st squib> or No.3 and 4 <2nd squib>) by backprobing.

(5) Connect the negative battery terminal.

⚠ CAUTION

Always diagnosis code B1481 is set when checking diagnosis code B1400. This is because the second side terminal is isolated when checking it, diagnosis code B1481 is set but this is not a fault. In addition, always diagnosis code B1401 is set when checking diagnosis code B1480 because the first side terminal is isolated.

(6) Erase the diagnosis code memory, and check the diagnosis code.

Q: Is the checked diagnosis code set?

YES : Go to Step 7 .

NO : Replace the driver's air bag module (Refer to P.52B-334). Then go to Step 10 .

STEP 7. Check the clock spring (M.U.T.-III diagnosis code).

(1) Disconnect the negative battery terminal.

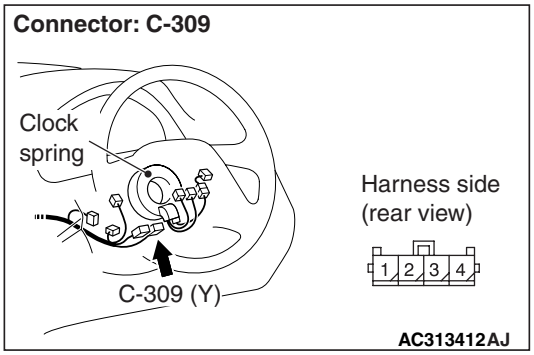

(2) Disconnect the clock spring connector C-309.

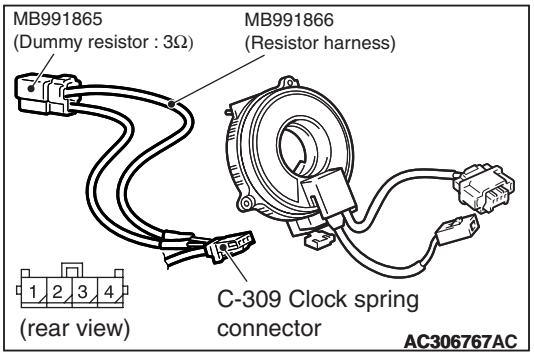

(3) Connect special tool dummy resistor (MB991865) to special tool resistor harness (MB991866).

⚠ CAUTION

Do not insert a test probe into the terminal from its front side directly, as the connector contact pressure may be weakened.

(4) Insert special tool MB991866 into clock spring harness side connector C-309 (terminal No.3 and 4 <1st squib> or No.1 and 2 <2nd squib>) by backprobing.

(5) Connect the negative battery terminal.

⚠ CAUTION

Always diagnosis code B1481 is set when checking diagnosis code B1400. This is because the second side terminal is isolated when checking it, diagnosis code B1481 is set but this is not a fault. In addition, always diagnosis code B1401 is set when checking diagnosis code B1480 because the first side terminal is isolated.

(6) Erase the diagnosis code memory, and check the diagnosis code.

Q: Is the checked diagnosis code set?

YES : Go to Step 8 .

NO : Replace the clock spring (Refer to P.52B-334). Then go to Step 10 .

Main Index
Group TOC

STEP 8. Check the driver's air bag module circuit. Resistance measurement at SRS-ECU connector C-119.

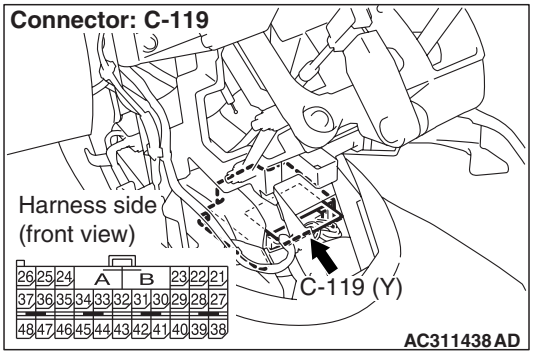

(1) Disconnect SRS-ECU connector C-119.

⚠ DANGER

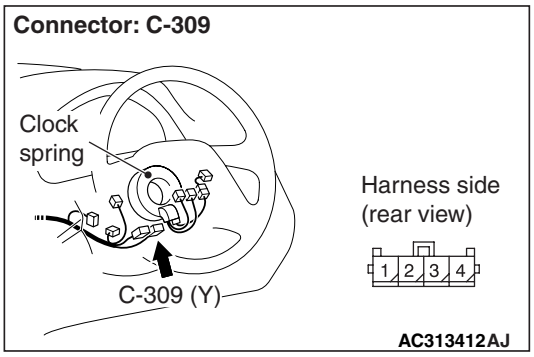

To prevent the air bag from deploying unintentionally, disconnect clock spring connector C-309 to short the squib circuit.

(2) Disconnect clock spring connector C-309.

⚠ CAUTION

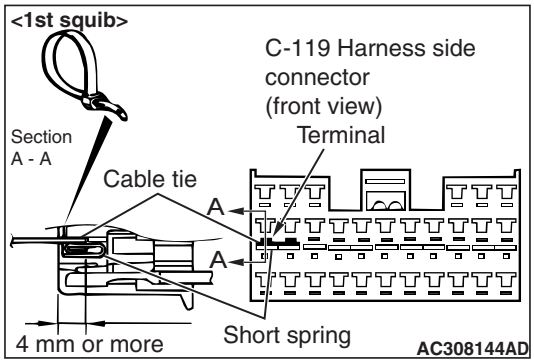

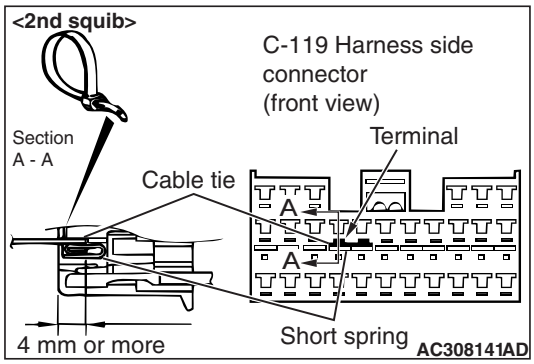

Insert an insulator such as a cable tie to a depth of 4mm or more, otherwise the short spring will not be released.

(3) Insert a cable tie [3 mm wide, 0.5 mm thick] between terminals 36, 37 <1st squib> or 33, 34 <2nd squib> and the short spring to release the short spring.

⚠ CAUTION

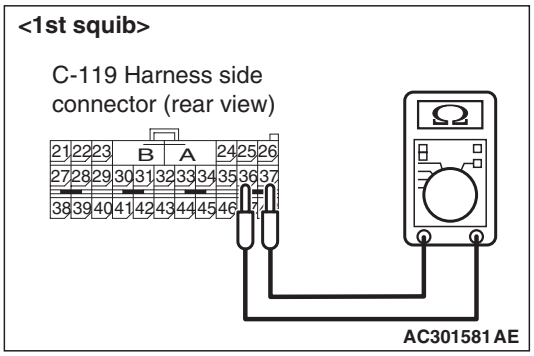

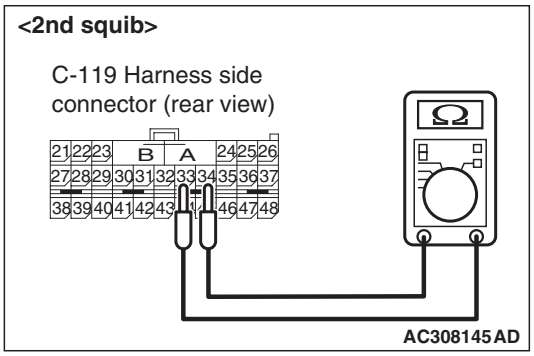

Do not insert a test probe into the terminal from its front side directly as the connector contact pressure may be weakened.

(4) Check for continuity between C-119 harness side connector terminals 36 and 37 <1st squib> or 33 and 34 <2nd squib>.

OK: Open circuit

Q: Is the check result normal?

YES : Erase the diagnosis code memory, and check the diagnosis code. If diagnosis code B1400 <1st squib> or B1481 <2nd squib> set, replace the SRS-ECU (Refer to P.52B-332). Then go to Step 10 .

NO : Go to Step 9 .

STEP 9. Check the harness for short circuit between SRS-ECU connector C-119 (terminal No.36 and 37 <1st squib> or No.33 and 34 <2nd squib>) and clock spring connector C-309 (terminal No.3 and 4 <1st squib> or No.1 and 2 <2nd squib>).

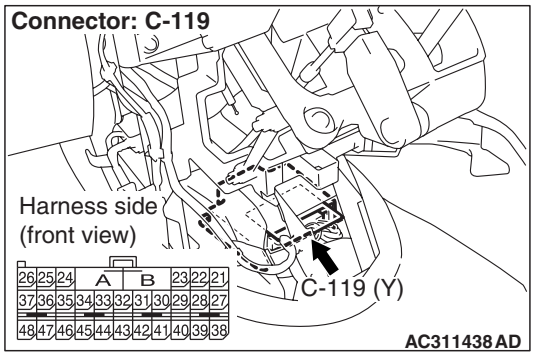

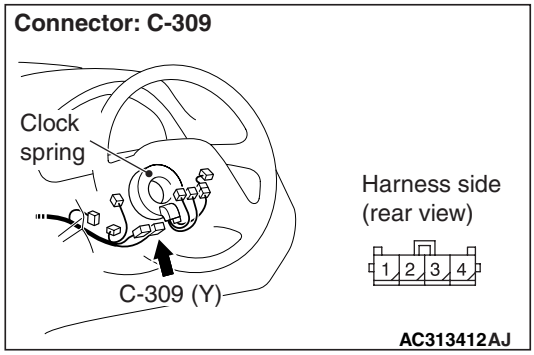

Q: Are harness wires between SRS-ECU connector C-119 (terminal No.36 and 37 <1st squib> or No.33 and 34 <2nd squib>) and clock spring connector C-309 (terminal No.3 and 4 <1st squib> or No.1 and 2 <2nd squib>) in good condition?

YES : Go to Step 10 .

NO : Replace the harness wires between SRS-ECU connector C-119 and clock spring connector C-309. Then go to Step 10 .

STEP 10. Check whether the diagnosis code is reset.

Q: Is diagnosis code B1400 <1st squib> or B1480 <2nd squib> set?

YES : Return to Step 1 .

NO : The procedure is complete.

Main Index
Group TOC

Code No.B1401: Driver's Air Bag Module (1st Squib) System Fault 2 (Open in the Squib Circuit)
Code No.B1481: Driver's Air Bag Module (2nd Squib) System Fault 2 (Open in the Squib Circuit)

Driver's Air Bag Module (1st and 2nd Squib) Circuit

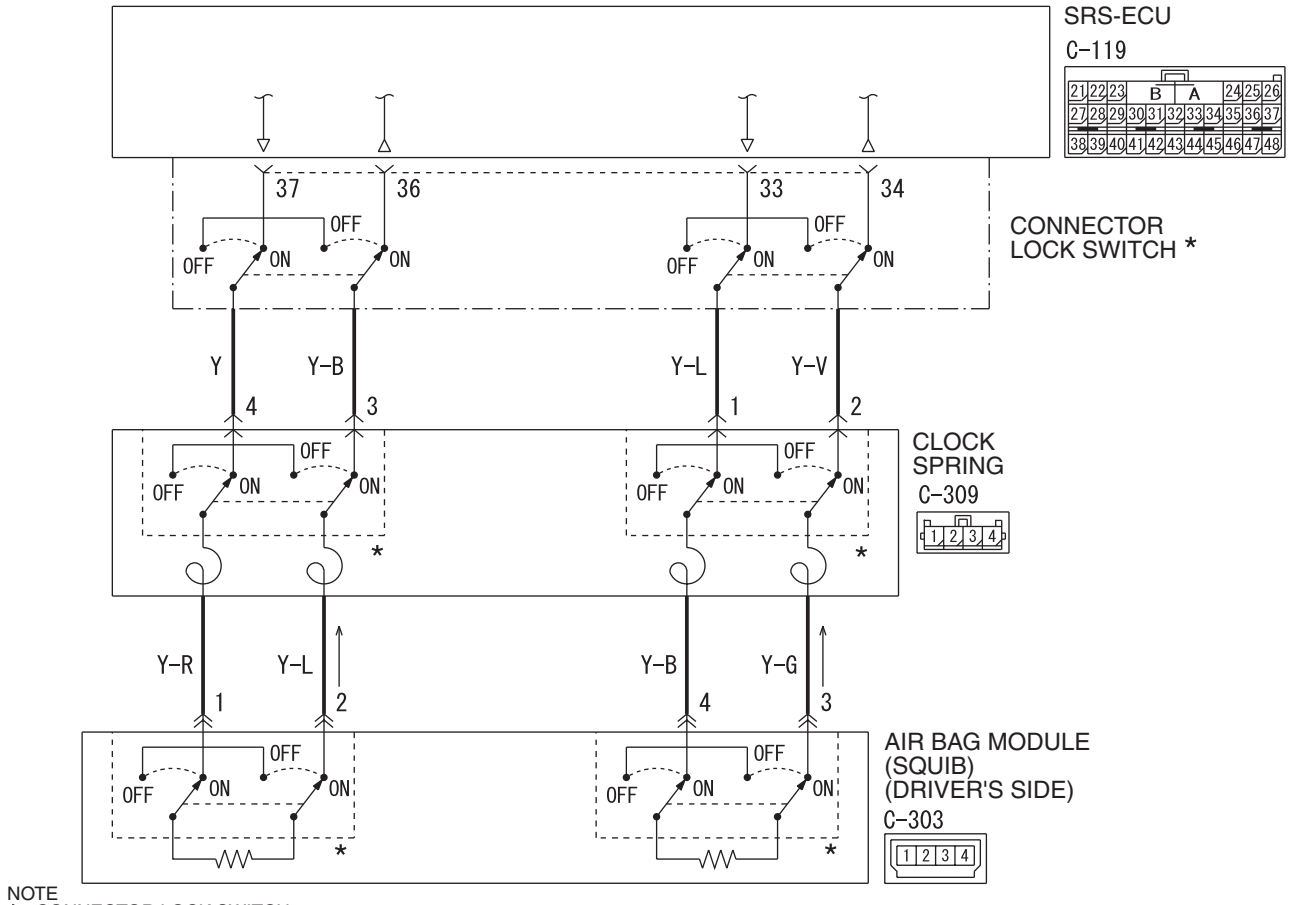

NOTE
* : CONNECTOR LOCK SWITCH
CONNECTOR CONNECTED: ON
CONNECTOR DISCONNECTED: OFF

Wire colour code
B : Black LG : Light green G : Green L : Blue W : White Y : Yellow SB : Sky blue
BR : Brown O : Orange GR : Gray R : Red P : Pink V : Violet

W4X52E002A

⚠ CAUTION

If diagnosis code B1401 <1st squib> or B1481 <2nd squib> is set in the SRS-ECU, always diagnose the CAN main bus line.

OPERATION

- The SRS-ECU judges how severe a collision is by detecting signals from the front impact sensors and the front air bag analog G-sensor. If the impact is over a predetermined level, the SRS-ECU sends an ignition signal. At this time, if the front air bag safing G-sensor is on, the SRS air bag will inflate.
- The ignition signal is input to the air bag module via the clock spring to inflate the air bag.

DIAGNOSIS CODE SET CONDITIONS

- This diagnosis code is set if there is abnormal resistance between the input terminals of the driver's side air bag module (squib). The most likely causes for this code to be set are the followings:
  - Open circuit in the driver's air bag module (squib) or harness
  - Open circuit in the clock spring
  - Malfunction of connector contact

However, if no diagnosis code reset, the SRS warning lamp will be switched off (diagnosis code will be retained).

PROBABLE CAUSES

- Open circuit in the clock spring
- Open circuit due to improper neutral position of the clock spring
- Open circuit in the driver's air bag module (squib) circuit
- Disengaged driver's air bag module (squib) connector
- Improper connector contact
- Malfunction of the SRS-ECU

DIAGNOSIS

STEP 1. M.U.T.-III CAN bus diagnostics

Use the M.U.T.-III to diagnose the CAN bus lines.

Q: Is the check result normal?

YES : Go to Step 2 .

NO : Repair the CAN bus line (Refer to GROUP 54F, Diagnosis P.54F-13).

STEP 2. Check whether the diagnosis code is reset.

Check again if the diagnosis code is set.

(1) Erase the diagnosis code.

(2) Ignition: "LOCK" (OFF) position to "ON"

(3) On completion, check that the diagnosis code is not reset.

Q: Is the diagnosis code set?

YES : Go to Step 3 .

NO : There is an intermittent malfunction such as poor engaged connector(s) or open circuit (Refer to GROUP 00, How to Cope with Intermittent Malfunction P.00-5).

STEP 3. Check the driver's air bag module (M.U.T.-III diagnosis code).

(1) Disconnect the negative battery terminal.

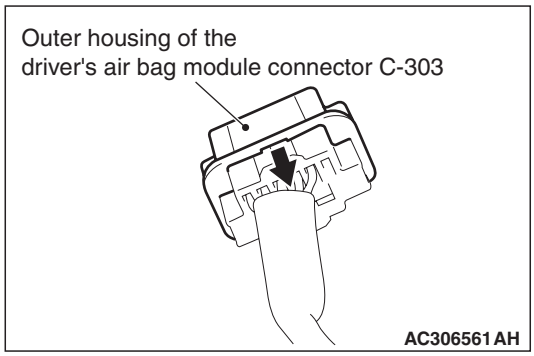

(2) Slide the outer housing of the driver' s air bag module connector C-303 in the arrow direction shown, and disconnect the connector.

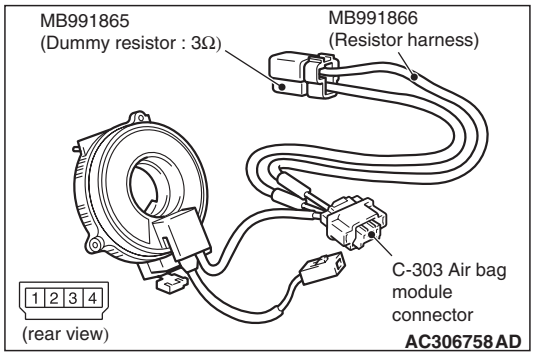

(3) Connect special tool dummy resistor (MB991865) to special tool resistor harness (MB991866).

⚠ CAUTION

Do not insert a test probe into the terminal from its front side directly, as the connector contact pressure may be weakened.

(4) Insert special tool MB991866 into clock spring side of driver's air bag module connector C-303 (terminal No.1 and 2 <1st squib> or terminal No.3 and 4 <2nd squib>) by backprobing.

(5) Connect the negative battery terminal.

⚠ CAUTION

Always diagnosis code B1481 is set when checking diagnosis code B1401. This is because the second side terminal is isolated when checking it, diagnosis code B1481 is set but this is not a fault. In addition, always diagnosis code B1401 is set when checking diagnosis code B1481 because the first side terminal is isolated.

(6) Erase the diagnosis code memory, and check the diagnosis code.

Q: Is the checked diagnosis code set?

YES : Go to Step 4 .

NO : Replace the driver's air bag module (Refer to P.52B-334). Then go to Step 6 .

Main Index
Group TOC

STEP 4. Check the clock spring (M.U.T.-III diagnosis code).

(1) Disconnect the negative battery terminal.

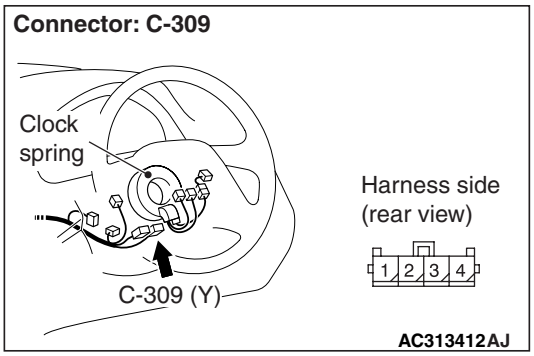

(2) Disconnect the clock spring connector C-309.

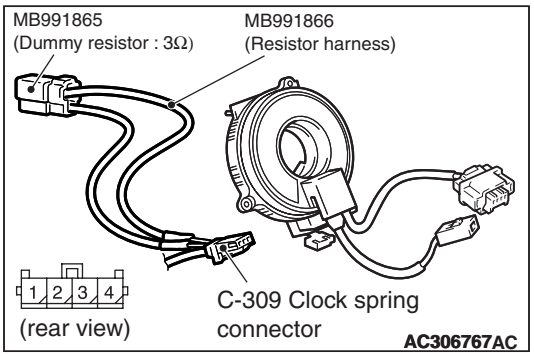

(3) Connect special tool dummy resistor (MB991865) to special tool resistor harness (MB991866).

⚠ CAUTION

Do not insert a test probe into the terminal from its front side directly, as the connector contact pressure may be weakened.

(4) Insert special tool MB991866 into harness side of clock spring connector C-309 (terminal No.4 and 3 <1st squib> or terminal No.1 and 2 <2nd squib>) by backprobing.

(5) Connect the negative battery terminal.

⚠ CAUTION

Always diagnosis code B1481 is set when checking diagnosis code B1401. This is because the second side terminal is isolated when checking it, diagnosis code B1481 is set but this is not a fault. In addition, always diagnosis code B1401 is set when checking diagnosis code B1481 because the first side terminal is isolated.

(6) Erase the diagnosis code memory, and check the diagnosis code.

Q: Is the checked diagnosis code set?

YES : Go to Step 5 .

NO : Replace the clock spring (Refer to P.52B-334). Then go to Step 6 .

STEP 5. Check the harness between the SRS-ECU connector C-119 (terminal No.36 and 37 <1st squib> or terminal No. 33 and 34 <2nd squib>) and the clock spring connector C-309 (terminal No.3 and 4 <1st squib> or terminal No.1 and 2 <2nd squib>) for open circuit.

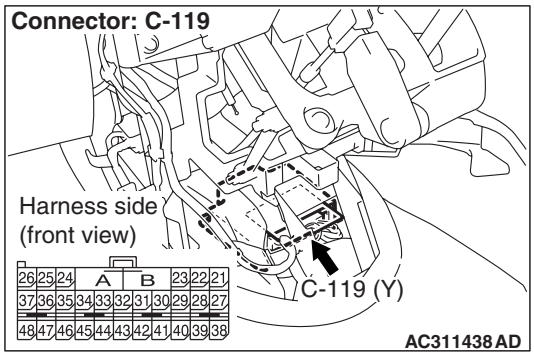

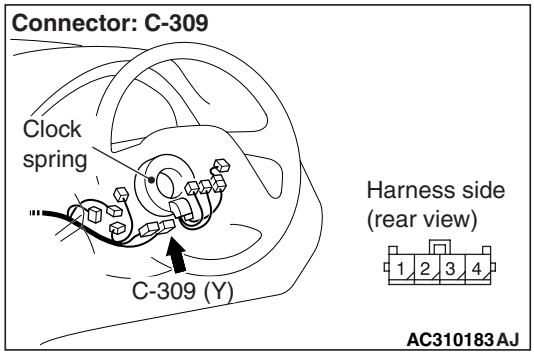

(1) Disconnect SRS-ECU connector C-119 and clock spring connector C-309.

Main Index
Group TOC

⚠ CAUTION

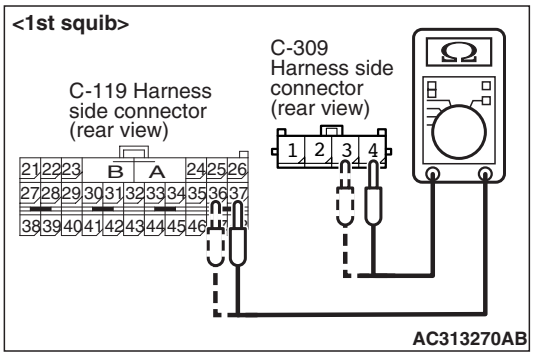

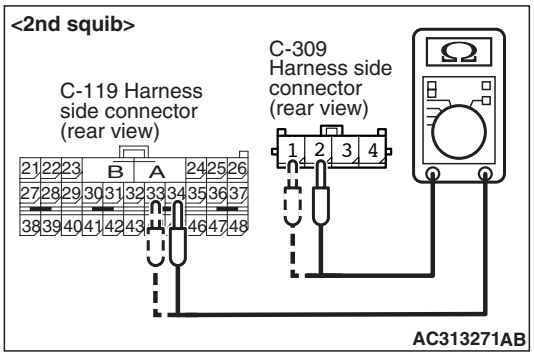

Do not insert a test probe into the terminal from its front side directly, as the connector contact pressure may be weakened.

(2) Check for continuity between the following terminals.

<1st squib>

- SRS-ECU connector C-119 (terminal No.36) and the clock spring connector C-309 (terminal No.3)
- SRS-ECU connector C-119 (terminal No.37) and the clock spring connector C-309 (terminal No.4)

<2nd squib>

- SRS-ECU connector C-119 (terminal No.33) and the clock spring connector C-309 (terminal No.1)
- SRS-ECU connector C-119 (terminal No.34) and the clock spring connector C-309 (terminal No.2)

OK: Less than 2 Ω

Q: Are the check results normal?

YES : Erase the diagnosis code memory, and check the diagnosis code. If diagnosis code B1401 <1st squib> or B1481 <2nd squib> set, replace the SRS-ECU (Refer to P.52B-332). Then go to Step 6 .

NO : Replace the harness wires between SRS-ECU connector C-119 and clock spring connector C-309. Then go to Step 6 .

STEP 6. Check whether the diagnosis code is reset.

Q: Is diagnosis code B1401 <1st squib> or B1481 <2nd squib> set?

YES : Return to Step 1 .

NO : The procedure is complete.

Main Index
Group TOC

Code No.1402: Driver's Air Bag Module (1st Squib) System Fault for Earth Circuit (Short-Circuited to Earth)
Code No.1482: Driver's Air Bag Module (2nd Squib) System Fault for Earth Circuit (Short-Circuited to Earth)

Driver's Air Bag Module (1st and 2nd Squib) Circuit

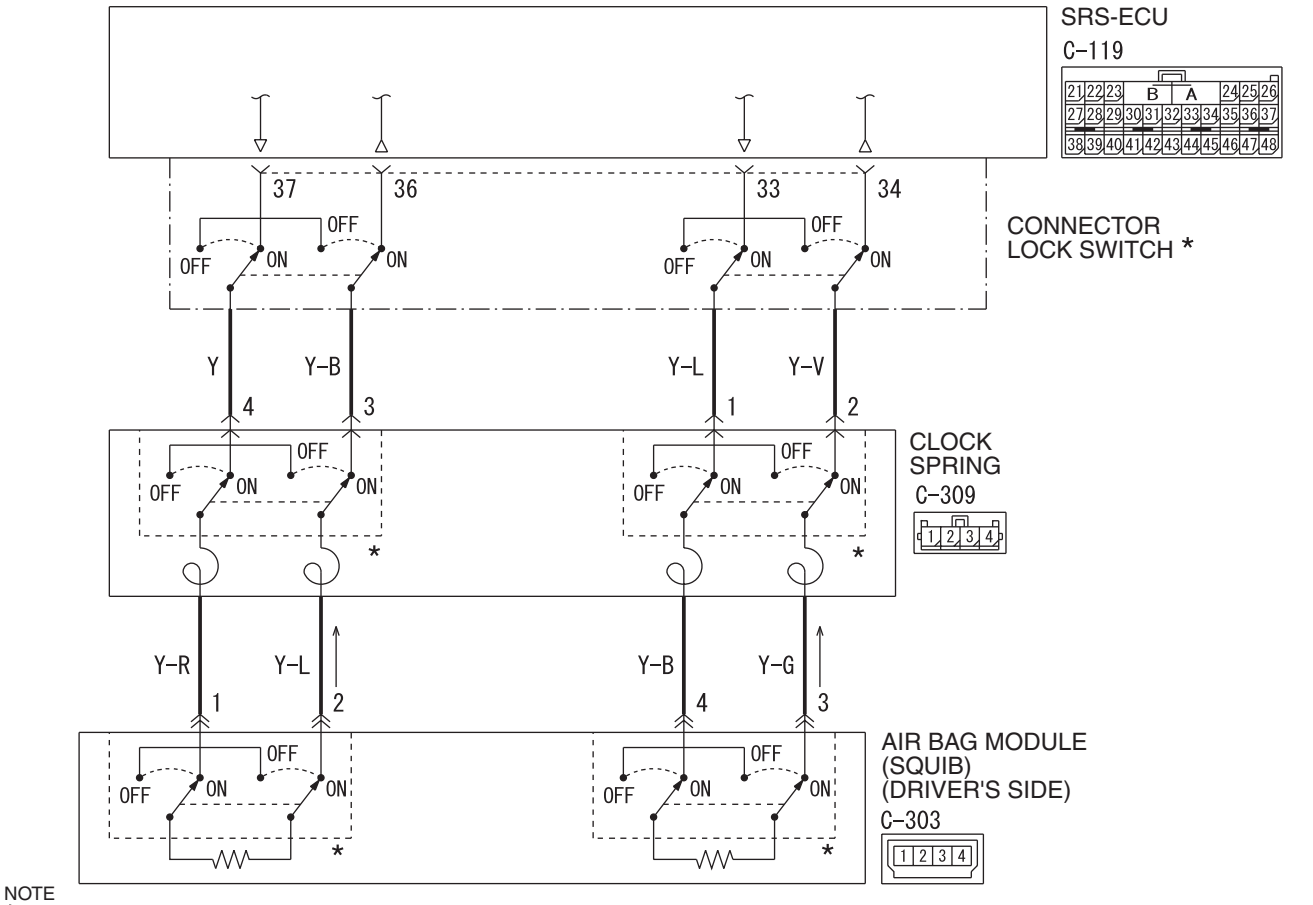

NOTE
* : CONNECTOR LOCK SWITCH
CONNECTOR CONNECTED: ON
CONNECTOR DISCONNECTED: OFF

Wire colour code
B : Black LG : Light green G : Green L : Blue W : White Y : Yellow SB : Sky blue
BR : Brown O : Orange GR : Gray R : Red P : Pink V : Violet

W4X52E002A

⚠ CAUTION

If diagnosis code B1402 <1st squib> or B1482 <2nd squib> is set in the SRS-ECU, always diagnose the CAN main bus line.

OPERATION

- The SRS-ECU judges how severe a collision is by detecting signals from the front impact sensors and the front air bag analog G-sensor. If the impact is over a predetermined level, the SRS-ECU sends an ignition signal. At this time, if the front air bag safing G-sensor is on, the SRS air bag will inflate.
- The ignition signal is sent to the air bag module via the clock spring to inflate the air bag.

DIAGNOSIS CODE SET CONDITIONS

This diagnosis code is set if there is abnormal resistance between the input terminals of the driver's air bag module (squib). However, if no diagnosis code resets, the SRS warning lamp will be switched off (diagnosis code will be retained).

PROBABLE CAUSES

- Malfunction of the clock spring
- Damaged harness wires and connectors
- Short to the earth in the driver's air bag module (squib) harness
- Malfunction of the SRS-ECU

DIAGNOSIS PROCEDURE

STEP 1. M.U.T.-III CAN bus diagnostics

Use the M.U.T.-III to diagnose the CAN bus lines.

Q: Is the check result normal?

YES : Go to Step 2 .

NO : Repair the CAN bus line (Refer to GROUP 54F, Diagnosis P.54F-13).

STEP 2. Check whether the diagnosis code is reset.

Check again if the diagnosis code is set.

(1) Erase the diagnosis code.

(2) Ignition: "LOCK" (OFF) position to "ON"

(3) On completion, check that the diagnosis code is not reset.

Q: Is the diagnosis code set?

YES : Go to Step 3 .

NO : There is an intermittent malfunction such as poor engaged connector(s) or open circuit (Refer to GROUP 00, How to Cope with Intermittent Malfunction P.00-5).

STEP 3. Check the driver's air bag module (M.U.T.-III diagnosis code).

(1) Disconnect the negative battery terminal.

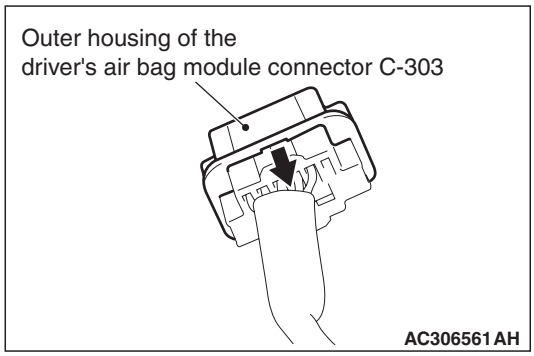

(2) Slide the outer housing of the driver' s air bag module connector C-303 in the arrow direction shown, and disconnect the connector.

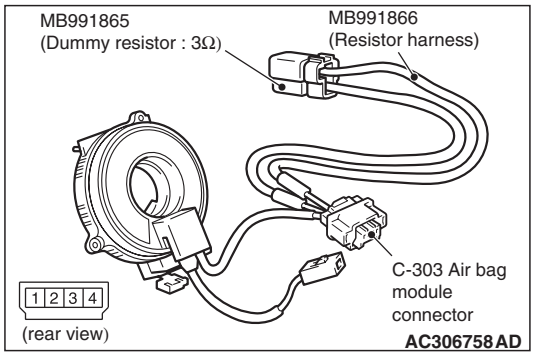

(3) Connect special tool dummy resistor (MB991865) to special tool resistor harness (MB991866).

⚠ CAUTION

Do not insert a test probe into the terminal from its front side directly, as the connector contact pressure may be weakened.

(4) Insert special tool MB991866 into clock spring side air bag module connector C-303 (terminal No.1 and 2 <1st squib> or terminal No.3 and 4 <2nd squib>) by backprobing.

(5) Connect the negative battery terminal.

⚠ CAUTION

Always diagnosis code B1481 is set when checking diagnosis code B1402. This is because the second side terminal is isolated when checking it, diagnosis code B1481 is set but this is not a fault. In addition, always diagnosis code B1401 is set when checking diagnosis code B1482 because the first side terminal is isolated.

(6) Erase the diagnosis code memory, and check the diagnosis code.

Q: Is the checked diagnosis code set?

YES : Go to Step 4 .

NO : Replace the driver's air bag module (Refer to P.52B-334). Then go to Step 7 .

STEP 4. Check the clock spring (M.U.T.-III diagnosis code).

(1) Disconnect the negative battery terminal.

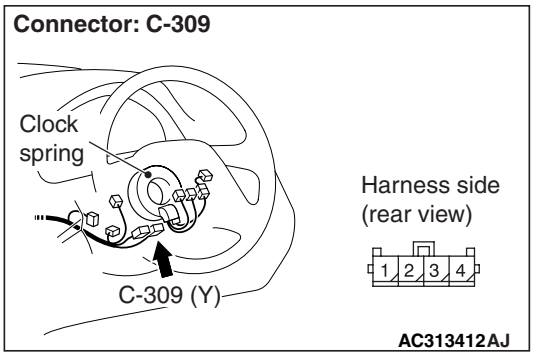

(2) Disconnect the clock spring connector C-309.

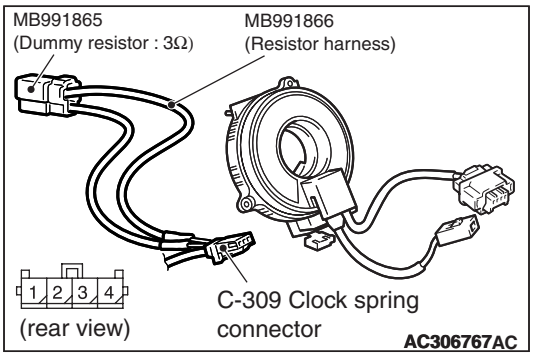

(3) Connect special tool dummy resistor (MB991865) to special tool resistor harness (MB991866).

⚠ CAUTION

Do not insert a test probe into the terminal from its front side directly, as the connector contact pressure may be weakened.

(4) Insert special tool MB991866 into clock spring harness side connector C-309 (terminal No.3 and 4 <1st squib> or terminal No.1 and 2 <2nd squib>) by backprobing.

(5) Connect the negative battery terminal.

⚠ CAUTION

Always diagnosis code B1481 is set when checking diagnosis code B1402. This is because the second side terminal is isolated when checking it, diagnosis code B1481 is set but this is not a fault. In addition, always diagnosis code B1401 is set when checking diagnosis code B1482 because the first side terminal is isolated.

(6) Erase the diagnosis code memory, and check the diagnosis code.

Q: Is the checked diagnosis code set?

YES : Go to Step 5 .

NO : Replace the clock spring (Refer to P.52B-334). Then go to Step 7 .

STEP 5. Check the driver's air bag module circuit. Resistance measurement at the SRS-ECU connector C-119.

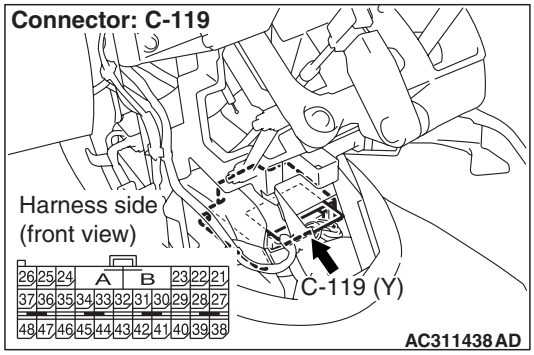

(1) Disconnect SRS-ECU connector C-119.

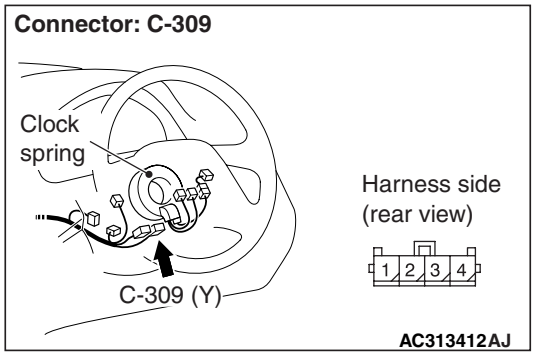

(2) Disconnect the clock spring connector C-309.

⚠ CAUTION

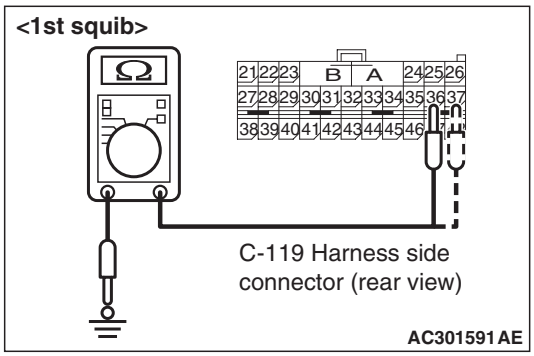

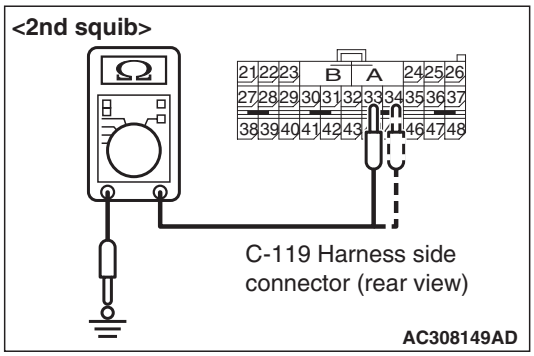

Do not insert a test probe into the terminal from its front side directly, as the connector contact pressure may be weakened.

(3) Check for continuity between C-119 harness side connector terminals 36 and 37 <1st squib> or 33 and 34 <2nd squib> and body earth.

OK: Open circuit

Q: Is the check result normal?

YES : Erase the diagnosis code memory, and check the diagnosis code. If diagnosis code B1402 <1st squib> or B1482 <2nd squib> sets, replace the SRS-ECU (Refer to P.52B-332). Then go to Step 6 .

NO : Go to Step 7 .

STEP 6. Check the harness for short circuit to earth between SRS-ECU connector C-119 (terminal No.36 and 37 <1st squib> or terminal No.33 and 34 <2nd squib>) and clock spring connector C-309 (terminal No.3 and 4 <1st squib> or terminal No.1 and 2 <2nd squib>).

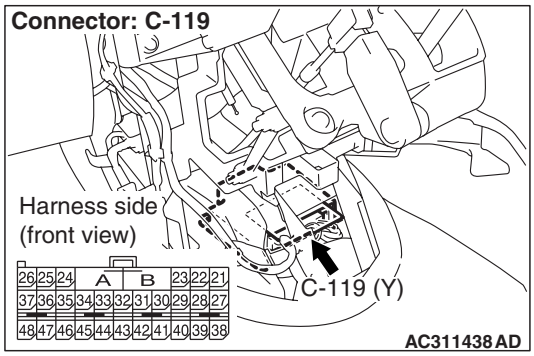

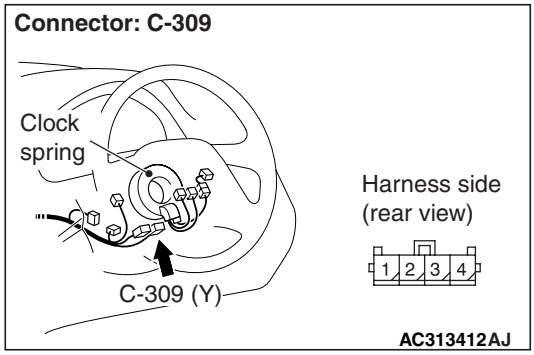

Q: Are the harness wires between SRS-ECU connector C-119 (terminal No.36 and 37 <1st squib> or terminal No.33 and 34 <2nd squib>) and clock spring connector C-309 (terminal No.3 and 4 <1st squib> or terminal No.1 and 2 <2nd squib>) in good condition?

YES : Go to Step 7 .

NO : Replace the harness wires between SRS-ECU connector C-119 and clock spring connector C-309. Then go to Step 7 .

STEP 7. Check whether the diagnosis code is reset.

Q: Is diagnosis code B1402 <1st squib> or B1482 <2nd squib> set?

YES : Return to Step 1 .

NO : The procedure is complete.

Main Index
Group TOC

Code No.B1403: Driver's Air Bag Module (1st Squib) System Fault for Power Supply Circuit (Short-Circuited to Power Supply)
Code No.B1483: Driver's Air Bag Module (2nd Squib) System Fault for Power Supply Circuit (Short-Circuited to Power Supply)

Driver's Air Bag Module (1st and 2nd Squib) Circuit

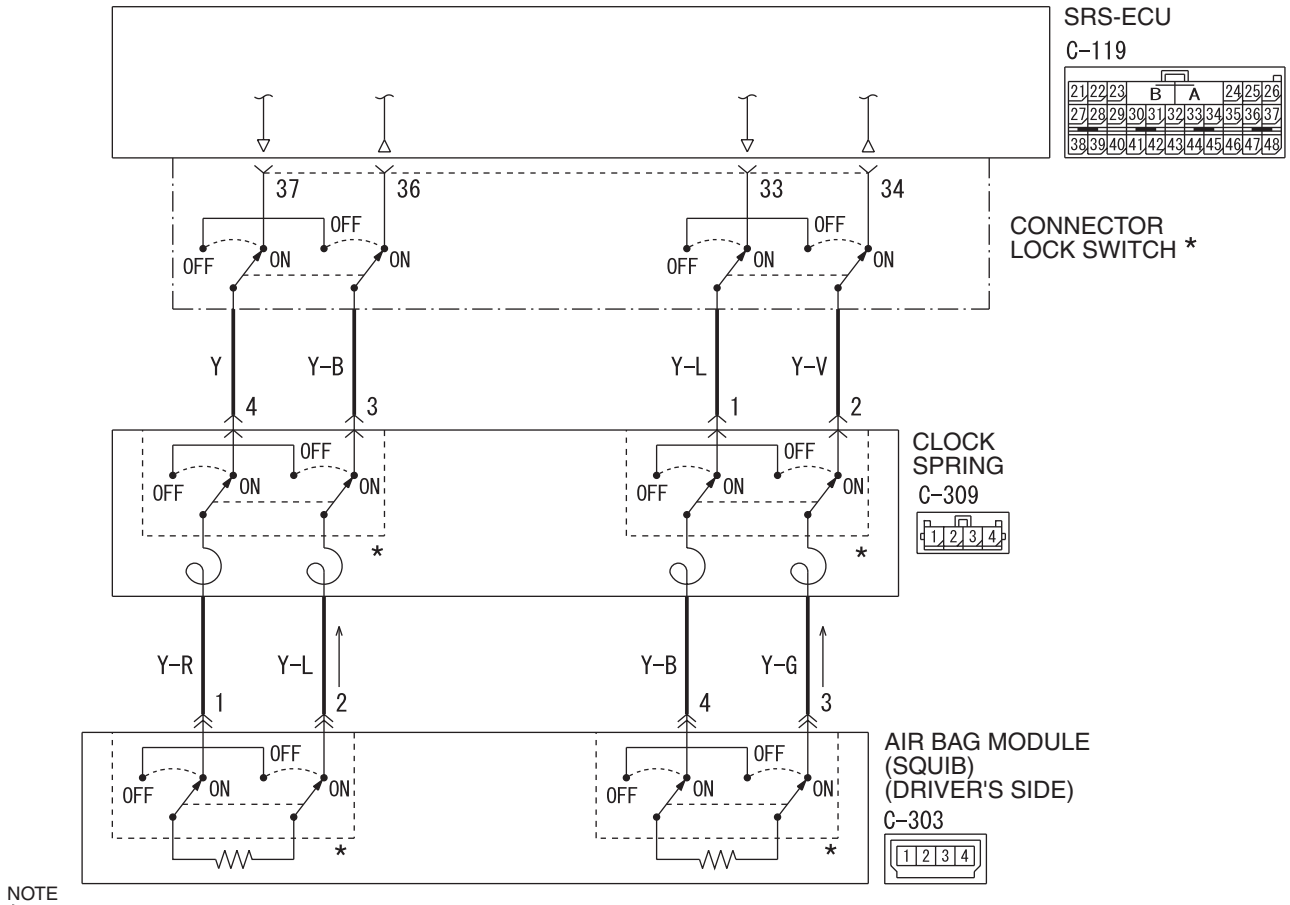

NOTE
* : CONNECTOR LOCK SWITCH
CONNECTOR CONNECTED: ON
CONNECTOR DISCONNECTED: OFF

Wire colour code
B : Black LG : Light green G : Green L : Blue W : White Y : Yellow SB : Sky blue
BR : Brown O : Orange GR : Gray R : Red P : Pink V : Violet

W4X52E002A

⚠ CAUTION

If diagnosis code B1403 <1st squib> or B1483 <2nd squib> is set in the SRS-ECU, always diagnose the CAN main bus line.

OPERATION

- The SRS-ECU judges how severe a collision is by detecting signals from the front impact sensors and the front air bag analog G-sensor. If the impact is over a predetermined level, the SRS-ECU sends an ignition signal. At this time, if the front air bag safing G-sensor is on, the SRS air bag will inflate.
- The ignition signal is input to the air bag module via the clock spring to inflate the air bag.

DIAGNOSIS CODE SET CONDITIONS

This diagnosis code is set if there is abnormal resistance between the input terminals of the driver's air bag module (squib). However, if no diagnosis code resets, the SRS warning light will be switched off (diagnosis code will be retained).

PROBABLE CAUSES

- Malfunction of the clock spring
- Damaged harness wires and connectors
- Short to the power supply in the driver's air bag module (squib) harness
- Malfunction of the SRS-ECU

DIAGNOSIS PROCEDURE

STEP 1. M.U.T.-III CAN bus diagnostics

Use the M.U.T.-III to diagnose the CAN bus lines.

Q: Is the check result normal?

YES : Go to Step 2 .

NO : Repair the CAN bus line (Refer to GROUP 54F, Diagnosis P.54F-13).

STEP 2. M.U.T.-III diagnosis code

Check again if the diagnosis code is set.

(1) Erase the diagnosis code.

(2) Ignition: "LOCK" (OFF) position to "ON"

(3) On completion, check that the diagnosis code is not reset.

Q: Is the diagnosis code set?

YES : Go to Step 3 .

NO : There is an intermittent malfunction such as poor engaged connector(s) or open circuit (Refer to GROUP 00, How to Cope with Intermittent Malfunction P.00-5).

STEP 3. Check the driver's air bag module (M.U.T.-III diagnosis code).

(1) Disconnect the negative battery terminal.

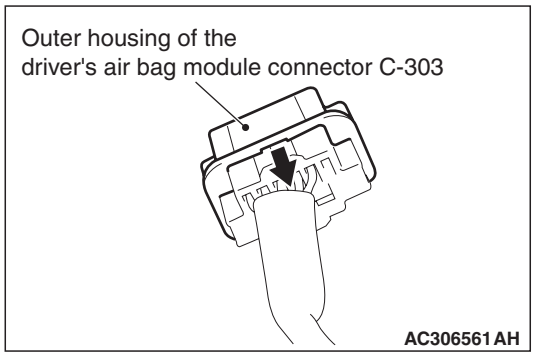

(2) Slide the outer housing of the driver' s air bag module connector C-303 in the arrow direction shown, and disconnect the connector.

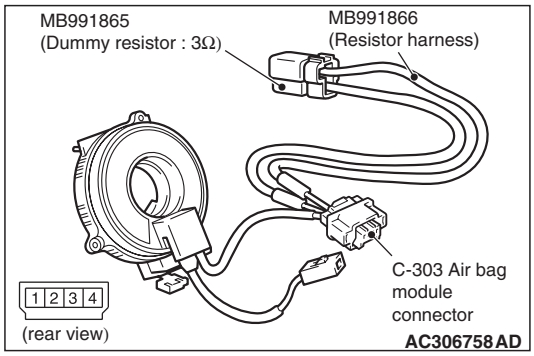

(3) Connect special tool dummy resistor (MB991865) to special tool resistor harness (MB991866).

⚠ CAUTION

Do not insert a test probe into the terminal from its front side directly, as the connector contact pressure may be weakened.

(4) Insert special tool MB991866 into clock spring side air bag module connector C-303 (terminal No.1 and 2 <1st squib> or terminal No.3 and 4 <2nd squib>) by backprobing.

(5) Connect the negative battery terminal.

⚠ CAUTION

Always diagnosis code B1481 is set when checking diagnosis code B1403. This is because the second side terminal is isolated when checking it, diagnosis code B1481 is set but this is not a fault. In addition, always diagnosis code B1401 is set when checking diagnosis code B1483 because the first side terminal is isolated.

(6) Erase the diagnosis code memory, and check the diagnosis code.

Q: Is the checked diagnosis code set?

YES : Go to Step 4 .

NO : Replace the driver's air bag module (Refer to P.52B-334). Then go to Step 7 .

STEP 4. Check the clock spring (M.U.T.-III diagnosis code).

(1) Disconnect the negative battery terminal.

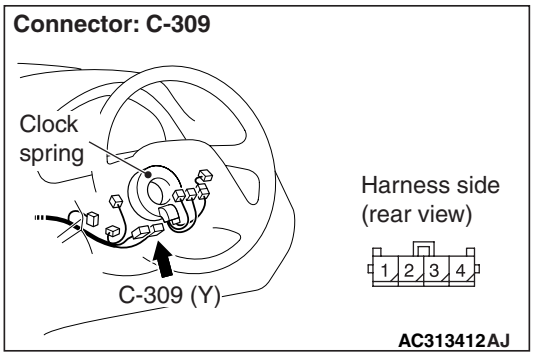

(2) Disconnect the clock spring connector C-309.

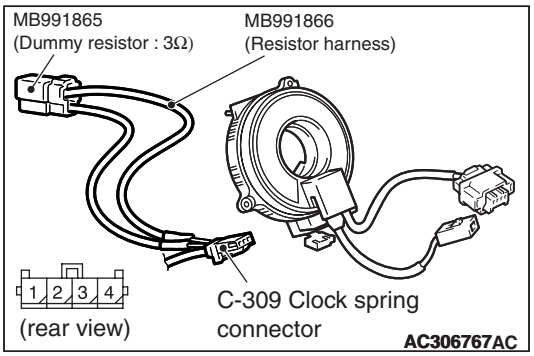

(3) Connect special tool dummy resistor (MB991865) to special tool resistor harness (MB991866).

⚠ CAUTION

Do not insert a test probe into the terminal from its front side directly, as the connector contact pressure may be weakened.

(4) Insert special tool MB991866 into clock spring harness side connector C-309 (terminal No.3 and 4 <1st squib> or terminal No.1 and 2 <2nd squib>) by backprobing.

(5) Connect the negative battery terminal.

⚠ CAUTION

Always diagnosis code B1481 is set when checking diagnosis code B1403. This is because the second side terminal is isolated when checking it, diagnosis code B1481 is set but this is not a fault. In addition, always diagnosis code B1401 is set when checking diagnosis code B1483 because the first side terminal is isolated.

(6) Erase the diagnosis code memory, and check the diagnosis code.

Q: Is the checked diagnosis code set?

YES : Go to Step 5 .

NO : Replace the clock spring (Refer to P.52B-334). Then go to Step 7 .

STEP 5. Check the driver's air bag module circuit. Voltage measurement at the SRS-ECU connector C-119.

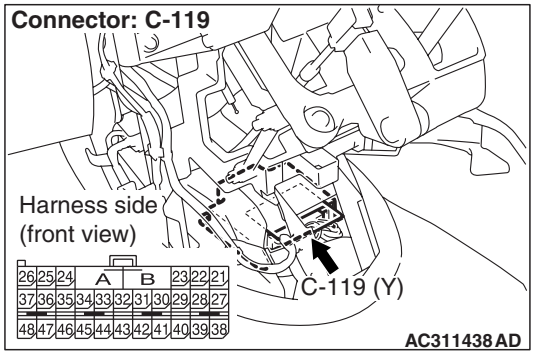

(1) Disconnect SRS-ECU connector C-119.

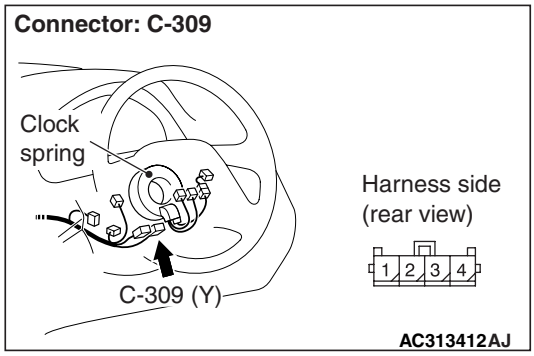

(2) Disconnect the clock spring connector C-309.

(3) Turn the ignition switch to the "ON" position.

⚠ CAUTION

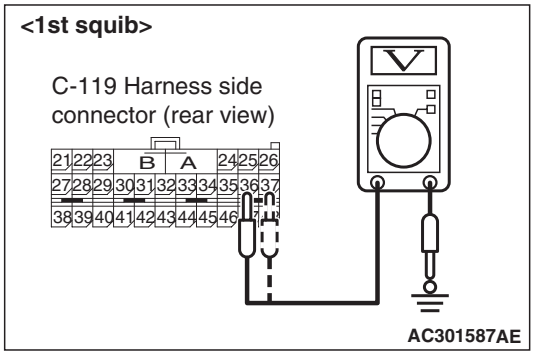

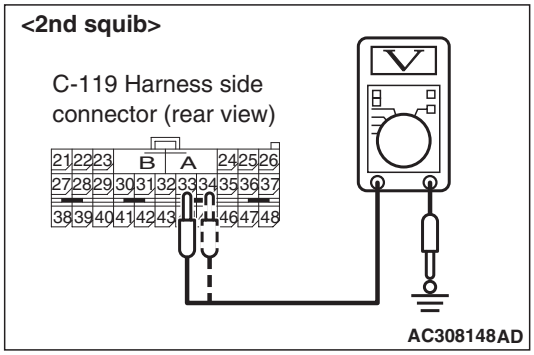

Do not insert a test probe into the terminal from its front side directly, as the connector contact pressure may be weakened.

(4) Measure the voltage between C-119 harness side connector terminals 36 and 37 <1st squib> or 33 and 34 <2nd squib> and body earth.

OK: 0 V

Q: Is the measured voltage within the specified range?

YES : Erase the diagnosis code memory, and check the diagnosis code. If diagnosis code B1403 <1st squib> or B1483 <2nd squib> sets, replace the SRS-ECU (Refer to P.52B-332). Then go to Step 7 .

NO : Go to Step 6 .

STEP 6. Check the harness for short circuit to power supply between SRS-ECU connector C-119 (terminal No.36 and 37 <1st squib> or terminal No.33 and 34 <2nd squib>) and clock spring connector C-309 (terminal No.3 and 4 <1st squib> or terminal No.1 and 2 <2nd squib>).

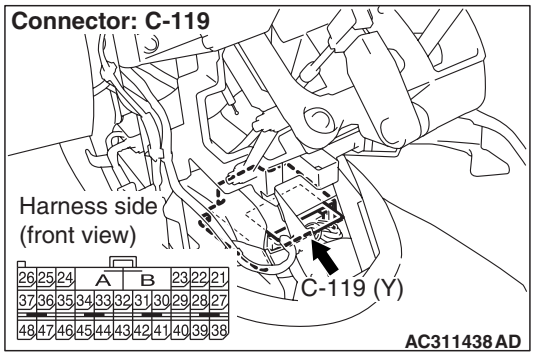

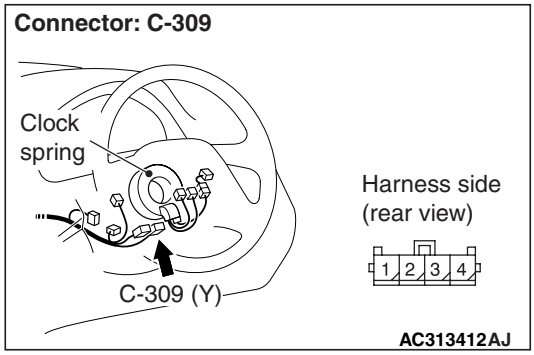

Q: Are harness wires between the SRS-ECU connector C-119 (terminal No.36 and 37 <1st squib> or terminal No.33 and 34 <2nd squib>) and clock spring connector C-309 (terminal No.3 and 4 <1st squib> or terminal No.1 and 2 <2nd squib>) in good condition?

YES : Go to Step 7 .

NO : Replace the harness wires between SRS-ECU connector C-119 and clock spring connector C-309. Then go to Step 7 .

STEP 7. Check whether the diagnosis code is reset.

Q: Is diagnosis code B1403 <1st squib> or B1483 <2nd squib> set?

YES : Return to Step 1 .

NO : The procedure is complete.

Main Index
Group TOC

Code No.B1404: Driver's Air Bag Module (1st Squib Ignition Drive Circuit) System Detected Short Circuit
Code No.B1405: Driver's Air Bag Module (1st Squib Ignition Drive Circuit) System Detected Open Circuit
Code No.B1414: Passenger's (Front) Air Bag Module (1st Squib Ignition Drive Circuit) System Detected Short Circuit
Code No.B1415: Passenger's (Front) Air Bag Module (1st Squib Ignition Drive Circuit) System Detected Open Circuit
Code No.B1424: Side-Airbag Module (RH) (Squib) System Detected Short Circuit
Code No.B1425: Side-Airbag Module (RH) (Squib) System Detected Open Circuit
Code No.B1434: Side-Airbag Module (LH) (Squib) System Detected Short Circuit
Code No.B1435: Side-Airbag Module (LH) (Squib) System Detected Open Circuit
Code No.B1444: Curtain air bag Module (RH) (Squib) System Detected Short Circuit
Code No.B1445: Curtain air bag Module (RH) (Squib) System Detected Open Circuit
Code No.B1454: Curtain air bag Module (LH) (Squib) System Detected Short Circuit
Code No.B1455: Curtain air bag Module (LH) (Squib) System Detected Open Circuit
Code No.B1464: Seat Belt Pre-tensioner (RH) (Squib Ignition Drive Circuit) System Detected Short Circuit
Code No.B1465: Seat Belt Pre-tensioner (RH) (Squib Ignition Drive Circuit) System Detected Open Circuit
Code No.B1466: Analog G-Sensor System in the SRS-ECU
Code No.B1467: Safing G-Sensor Open Circuit
Code No.B1468: Safing G-Sensor Short Circuit
Code No.B1469: Safing G-Sensor for Side Air Bag Faults
Code No.B1474: Seat Belt Pre-tensioner (LH) (Squib Ignition Drive Circuit) System Detected Short Circuit
Code No.B1475: Seat Belt Pre-tensioner (LH) (Squib Ignition Drive Circuit) System Detected Open Circuit
Code No.B1478: SRS-ECU Capacitor Circuit Voltage too High
Code No.B1479: SRS-ECU Capacitor Circuit Voltage too Low
Code No.B1484: Driver's Air Bag Module (2nd Squib Ignition Drive Circuit) System Detected Short Circuit
Code No.B1485: Driver's Air Bag Module (2nd Squib Ignition Drive Circuit) System Detected Open Circuit
Code No.B1494: Passenger's (Front) Air Bag Module (2nd Squib Ignition Drive Circuit) System Detected Short Circuit
Code No.B1495: Passenger's (Front) Air Bag Module (2nd Squib Ignition Drive Circuit) System Detected Open Circuit
Code No.B1496: SRS-ECU Non-Volatile Memory (EEPROM)
Code No.B1497: SRS-ECU Application specific integrated circuit (for frontal activation)
Code No.B1498: SRS-ECU ROM or RAM
Code No.B1548: CAN Communication Malfunction
Code No.B1549: CAN Communication error
Code No.B1552: Changing Circuit shorted
Code No.B1553: Changing Circuit open
Code No.B1554: SG BY-PASS Circuit Malfunction
Code No.B1555: SG BY-PASS Circuit (field effect transistor) Open
Code No.B1557: SRS-ECU Application specific integrated circuit

⚠ CAUTION
If diagnosis codes is set in the SRS-ECU, always diagnose the CAN main bus line.

Main Index
Group TOC

DIAGNOSIS CODE SET CONDITIONS

- These diagnosis code are set when a fault is detected in the SRS-ECU. The most likely causes for this code to be set are shown in the table below:

PROBABLE CAUSE

- Malfunction of the SRS-ECU

Code No.	Part/Circuit integral to SRS-ECU	Trouble causes
B1404	Driver's air bag module (1st squib ignition drive circuit)	• Short circuit in the squib ignition drive circuit
B1405		• Open circuit in the squib ignition drive circuit
B1414	Passenger's (front) air bag module (1st squib ignition drive circuit)	• Short circuit in the squib ignition drive circuit
B1415		• Open circuit in the squib ignition drive circuit
B1424	Side-airbag module (RH) (squib ignition drive circuit)	• Short circuit in the squib ignition drive circuit
B1425		• Open circuit in the squib ignition drive circuit
B1434	Side-airbag module (LH) (squib ignition drive circuit)	• Short circuit in the squib ignition drive circuit
B1435		• Open circuit in the squib ignition drive circuit
B1444	Curtain air bag module (RH) (squib ignition drive circuit)	• Short circuit in the squib ignition drive circuit
B1445		• Open circuit in the squib ignition drive circuit
B1454	Curtain air bag module (LH) (squib ignition drive circuit)	• Short circuit in the squib ignition drive circuit
B1455		• Open circuit in the squib ignition drive circuit
B1464	Seat belt pre-tensioner (RH) (squib ignition drive circuit)	• Short circuit in the squib ignition drive circuit
B1465		• Open circuit in the squib ignition drive circuit
B1466	Analog G-sensor	• When the analog G-sensor is not operating • When the characteristics of the analog G-sensor are abnormal • When the output from the analog G-sensor is abnormal
B1467	Safing G-sensor (front air bag)	• Open circuit in the safing G-sensor
B1468		• Short circuit in the safing G-sensor
B1469	Safing G-sensor (side-airbag)	• When the safing G-sensor is not operating • When the characteristics of the safing G-sensor are abnormal • When the output from the safing G-sensor is abnormal
B1474	Seat belt pre-tensioner (LH) (squib ignition drive circuit)	• Short circuit in the squib ignition drive circuit
B1475		• Open circuit in the squib ignition drive circuit
B1478	Capacitor	• Voltage at the capacitor terminal is higher than the specified value for five seconds or more
B1479		• Voltage at the capacitor terminal is lower than the specified value for five seconds or more (This is not detected if diagnosis code B1476 or B1477 indicating battery positive voltage drop has been set).
B1484	Driver's air bag module (2nd squib ignition drive circuit)	• Short circuit in the squib ignition drive circuit
B1485		• Open circuit in the squib ignition drive circuit
B1494	Passenger's (front) air bag module (2nd squib ignition drive circuit)	• Short circuit in the squib ignition drive circuit
B1495		• Open circuit in the squib ignition drive circuit

Main Index
Group TOC

Code No.	Part/Circuit integral to SRS-ECU	Trouble causes
B1496	Non-volatile memory (EEPROM)	• When the non-volatile memory (EEPROM) are abnormal
B1497	Application specific integrated circuit (for frontal activation)	• When the application specific integrated circuit (frontal activation) are abnormal
B1498	ROM or RAM	• When the ROM or RAM are abnormal
B1548	CAN communication	• When the CAN communication are abnormal
B1549		• When the CAN communication are error
B1552	Changing of power supply	• Short circuit in the changing circuit
B1553		• Open circuit in the changing circuit
B1554	SG BY-PASS	• When the application specific integrated circuit (frontal activation) are abnormal
B1555		• When the ROM or RAM are abnormal
B1557	Application specific integrated circuit	• When the application specific integrated circuit are abnormal

DIAGNOSIS PROCEDURE

STEP 1. M.U.T.-III CAN bus diagnostics
Use the M.U.T.-III to diagnose the CAN bus lines.

Q: Is the check result normal?
YES : Go to Step 2.
NO : Repair the CAN bus line (Refer to GROUP 54F, Diagnosis P.54F-13).

STEP 2. Check whether the diagnosis code is reset.
Check again if the diagnosis code is set.
(1) Erase the diagnosis code.
(2) Ignition: "LOCK" (OFF) position to "ON"
(3) On completion, check that the diagnosis code is not reset.

Q: Is the diagnosis codes set?
YES : Replace the SRS-ECU (Refer to P.52B-332).
NO : There is an intermittent malfunction such as poor engaged connector(s) or open circuit (Refer to GROUP 00, How to Cope with Intermittent Malfunction P.00-5).

Main Index
Group TOC

Code No.B1406: Front Impact Sensor (RH) System for Fault 1
Code No.B1416: Front Impact Sensor (LH) System for Fault 1

⚠ CAUTION
If diagnosis code B1406 or B1416 is set in the SRS-ECU, always diagnose the CAN main bus line.

DIAGNOSIS CODE SET CONDITIONS

These diagnosis codes are set if the following conditions are detected from the analogue G-sensor inside the front impact sensor output:

- Analogue G-sensor is not operating.
- Analogue G-sensor characteristics are abnormal.
- Analogue G-sensor output is abnormal.

PROBABLE CAUSES

Malfunction of front impact sensor (RH) (for diagnosis code B1406) and front impact sensor (LH) (for diagnosis code B1416)

DIAGNOSIS PROCEDURE

STEP 1. M.U.T.-III CAN bus diagnostics
Use the M.U.T.-III to diagnose the CAN bus lines.

Q: Is the check result normal?
YES : Go to Step 2 .
NO : Repair the CAN bus line (Refer to GROUP 54F, Diagnosis P.54F-13).

STEP 2. Check whether the diagnosis code is reset.
Check again if the diagnosis code is set.
(1) Erase the diagnosis code.
(2) Ignition: "LOCK" (OFF) position to "ON"
(3) On completion, check that the diagnosis code is not reset.

Q: Is the diagnosis code set?
YES : Go to Step 3 .
NO : There is an intermittent malfunction such as poor engaged connector(s) or open circuit (Refer to GROUP 00, How to Cope with Intermittent Malfunction P.00-5).

STEP 3. Check the front impact sensor (M.U.T.-III diagnosis code).
Replace front impact sensor (RH) and front impact sensor (LH) (for diagnosis code B1416) (Refer to P.52B-330).
Check the diagnosis code.

Q: Is either diagnosis code B1406 or B1416 set?
YES : Replace the SRS-ECU (Refer to P.52B-332).
NO : The procedure is complete.

Main Index
Group TOC

Code No.B1407: Front Impact Sensor (RH) Power Supply Circuit System

Front Impact Sensor Circuit

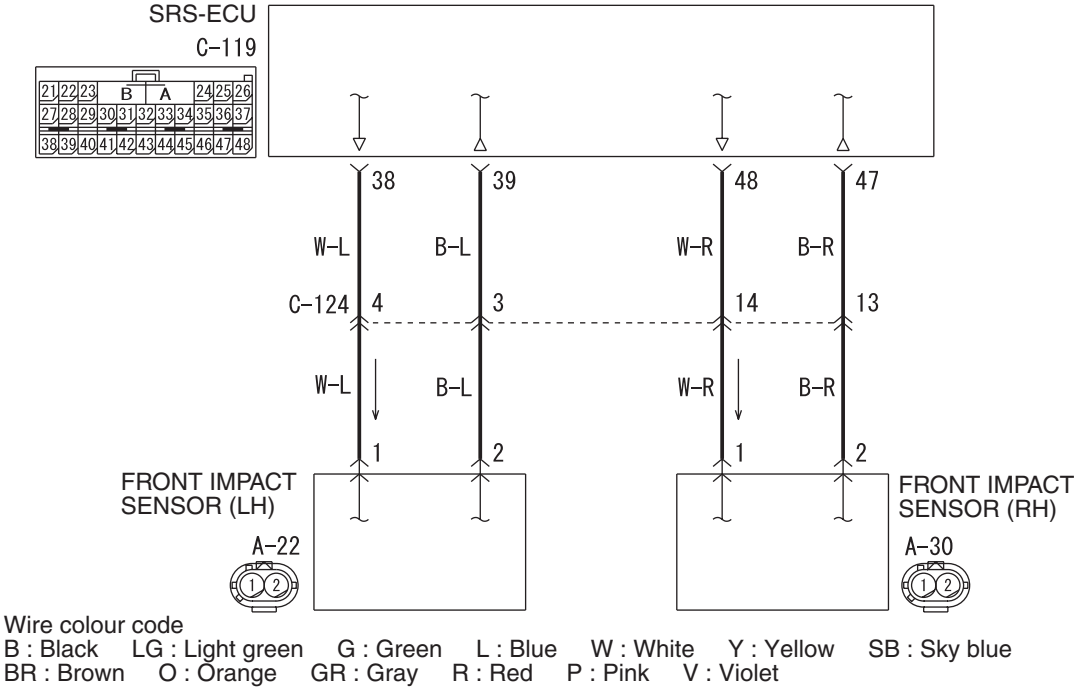

W4X52E004A

⚠ CAUTION

If diagnosis code B1407 is set in the SRS-ECU, always diagnose the CAN main bus line.

OPERATION

The front impact sensor includes an analogue G-sensor and CPU, etc. The CPU monitors the analogue G-sensor output signal. If the CPU judges that the front air bags should be deployed, it sends a fire signal to the SRS-ECU to deploy the front air bags. In addition, the CPU diagnoses the internal components of the front impact sensor. If a malfunction occurs, it requests the SRS-ECU to set a diagnosis code.

DIAGNOSIS CODE SET CONDITIONS

This diagnosis code will set when the power supply voltage to the front impact sensor (RH) remains less than a predetermined value for five seconds. However, if the system returns to normal condition, code number B1407 will be erased automatically and the SRS warning lamp will go out.

PROBABLE CAUSES

- Damaged wiring harness or connectors
- Malfunction of the front impact sensor (RH)
- Malfunction of the SRS-ECU

DIAGNOSIS PROCEDURE

STEP 1. M.U.T.-III CAN bus diagnostics

Use the M.U.T.-III to diagnose the CAN bus lines.

Q: Is the check result normal?

YES : Go to Step 2.

NO : Repair the CAN bus line (Refer to GROUP 54F, Diagnosis P.54F-13).

STEP 2. Check whether the diagnosis code is reset.

Check again if the diagnosis code is set.

(1) Erase the diagnosis code.
(2) Ignition: "LOCK" (OFF) position to "ON"
(3) On completion, check that the diagnosis code is not reset.

Q: Is the diagnosis code set?

YES : Go to Step 3.

NO : There is an intermittent malfunction such as poor engaged connector(s) or open circuit (Refer to GROUP 00, How to Cope with Intermittent Malfunction P.00-5).

Main Index
Group TOC

STEP 3. Check the harness wires for open circuit or short circuit between SRS-ECU connector C-119 (terminal No.47 and 48) and front impact sensor (RH) connector A-30 (terminal No.1 and 2).

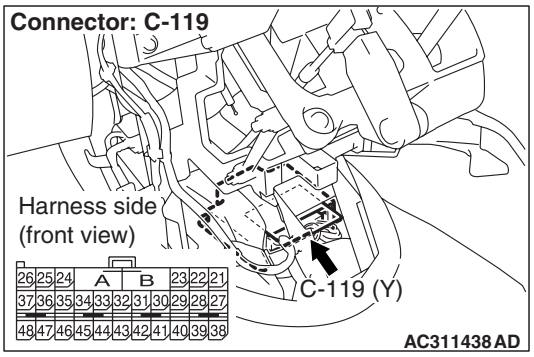

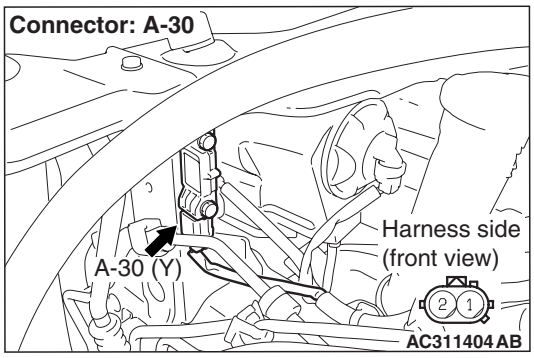

NOTE:

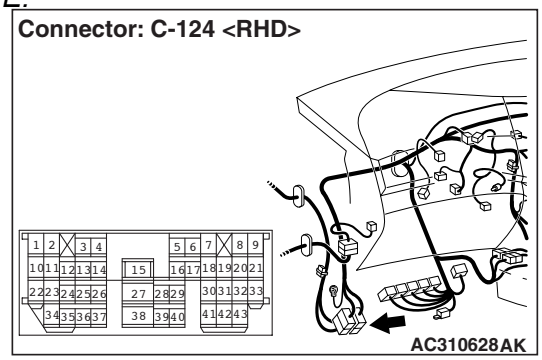

After inspecting intermediate connector C-124 inspect the wiring harness. If the intermediate connector C-124 is damaged, repair or replace it.

Q: Are the harness wires between SRS-ECU connector C-119 (terminal No.47 and 48) and front impact sensor (RH) (front) connector A-30 (terminal No.1 and 2) in good condition?

YES : . Go to Step 4.

NO : . Replace the harness wires between SRS-ECU connector C-119 (terminal No.47 and 48) and front impact sensor (RH) connector A-30 (terminal No.1 and 2).

STEP 4. Check the front impact sensor (RH) (M.U.T.-III diagnosis code).

(1) Disconnect the negative battery terminal.
(2) Replace the front impact sensor (RH) with the front impact sensor (LH).
(3) Connect the negative battery terminal.
(4) Erase diagnosis code memory, and check the diagnosis code.

Q: Is diagnosis code B1407 set?

YES : Replace the SRS-ECU (Refer to P.52B-332).

NO : Replace the front impact sensor (RH) with a new one (Refer to P.52B-330). Then go to Step 5.

STEP 5. Check whether the diagnosis code is reset.

Q: Is diagnosis code B1407 set?

YES : Replace the SRS-ECU (Refer to P.52B-332).

NO : An intermittent malfunction is suspected (Refer to GROUP 00, How to Use Troubleshooting/Inspection Service Points P.00-5).

Main Index
Group TOC

Code No.B1408: Front Impact Sensor (RH) (Squib) for Power Supply Circuit
Code No.B1409: Front Impact Sensor (RH) (Squib) for Communication System

Front Impact Sensor Circuit

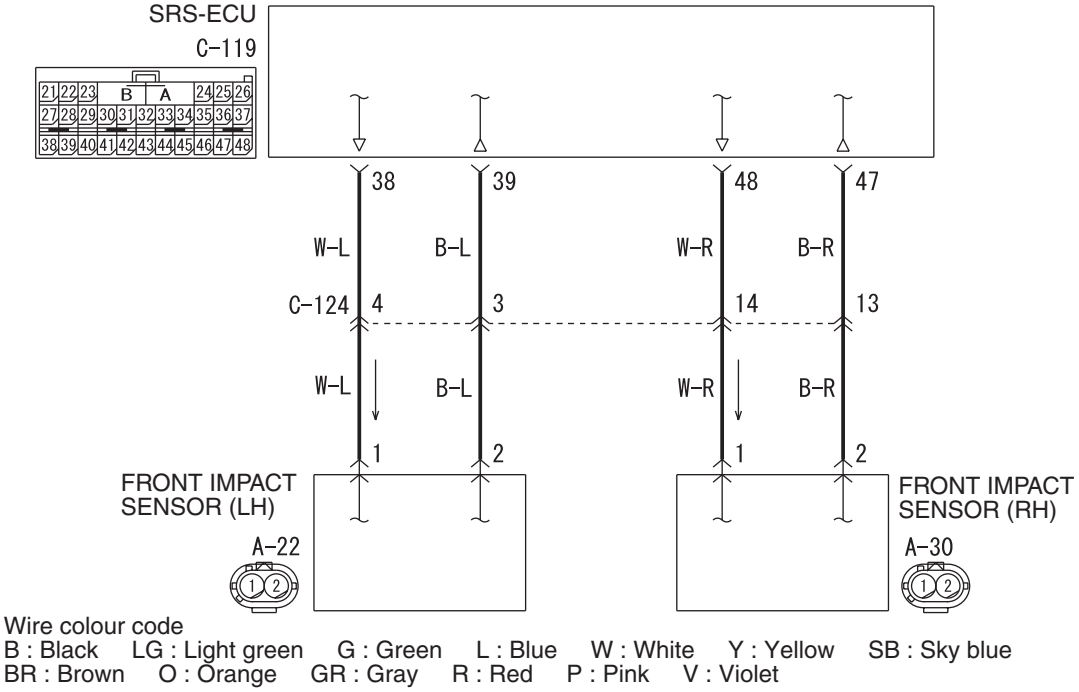

W4X52E004A

⚠ CAUTION

If diagnosis code B1408 or B1409 is set in the SRS-ECU, always diagnose the CAN main bus line.

OPERATION

The front impact sensor includes an analogue G-sensor and CPU, etc. The CPU monitors the analogue G-sensor output signal. If the CPU judges that the front air bags should be deployed, it sends a fire signal to the SRS-ECU to deploy the front air bags. In addition, the CPU diagnoses the internal components of the front impact sensor. If a malfunction occurs, it requests the SRS-ECU to set a diagnosis code.

DIAGNOSIS CODE SET CONDITIONS

These diagnosis codes are set if communication between the front impact sensor (RH) and the SRS-ECU is not possible or faulty.

PROBABLE CAUSES

- Damaged wiring harnesses or connectors
- Malfunction of the front impact sensor (RH)
- Malfunction of the SRS-ECU

DIAGNOSIS PROCEDURE

STEP 1. M.U.T.-III CAN bus diagnostics

Use the M.U.T.-III to diagnose the CAN bus lines.

Q: Is the check result normal?

YES : Go to Step 2 .

NO : Repair the CAN bus line (Refer to GROUP 54F, Diagnosis P.54F-13).

STEP 2. Check whether the diagnosis code is reset.

Check again if the diagnosis code is set.

(1) Erase the diagnosis code.
(2) Ignition: "LOCK" (OFF) position to "ON"
(3) On completion, check that the diagnosis code is not reset.

Q: Is the diagnosis code set?

YES : Go to Step 3 .

NO : There is an intermittent malfunction such as poor engaged connector(s) or open circuit (Refer to GROUP 00, How to Cope with Intermittent Malfunction P.00-5).

STEP 3. Check the front impact sensor (RH) (M.U.T.-III diagnosis code).

(1) Disconnect the negative battery terminal.
(2) Replace the front impact sensor (RH) with the front impact sensor (LH).
(3) Connect the negative battery terminal.
(4) Erase diagnosis code from memory, and check the diagnosis code.

Q: Is diagnosis code B1418 or B1419 set?

YES : Replace the front impact sensor (RH) with a new one (Refer to P.52B-330). Go to Step 5 .

NO : Go to Step 4 .

STEP 4. Check the harness wires for open circuit or short circuit between SRS-ECU connector C-119 (terminal No.47 and 48) and front impact sensor (RH) connector A-30 (terminal No.1 and 2).

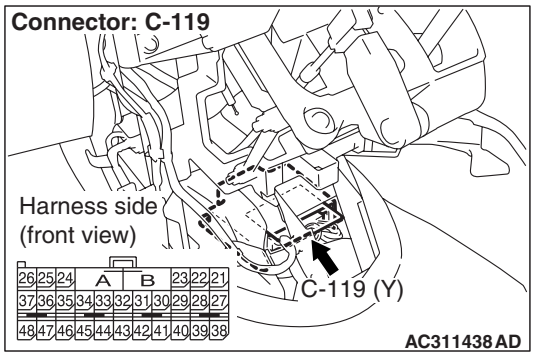

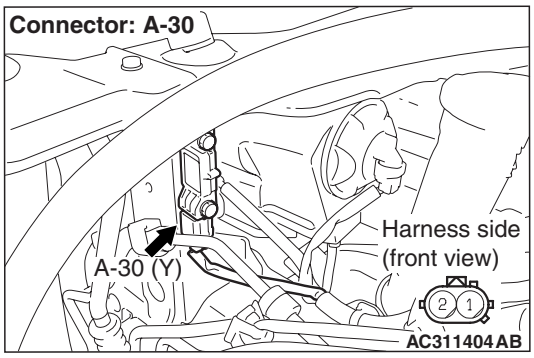

NOTE:

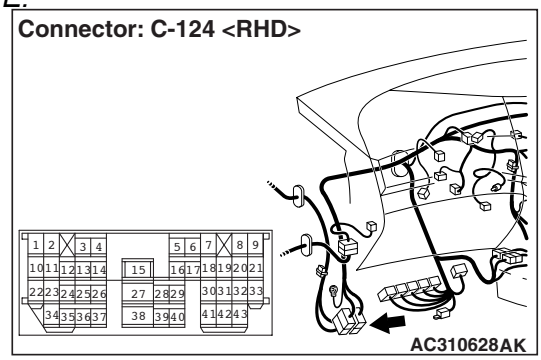

After inspecting intermediate connector C-124 inspect the wiring harness. If the intermediate connector C-124 is damaged, repair or replace it.

Q: Is the check result normal?

YES : Go to Step 5 .

NO : Repair the harness wires between SRS-ECU connector C-119 (terminal No.47 and 48) and front impact sensor (RH) connector A-30 (terminal No.1 and 2).

Main Index
Group TOC

STEP 5. Check whether the diagnosis code is reset.

Q: Is diagnosis code B1408 or B1409 set?

YES : Replace the SRS-ECU (Refer to P.52B-332).

NO : An intermittent malfunction is suspected (Refer to GROUP 00, How to Use Troubleshooting/Inspection Service Points P.00-5).

Code No.B1410: Passenger's (Front) Air Bag Module (1st Squib) System Fault 1 (Short Circuit between Terminals of the Squib Circuit)
Code No.B1490: Passenger's (Front) Air Bag Module (2nd Squib) System Fault 1 (Short Circuit between Terminals of the Squib Circuit)

Passenger's (Front) Air Bag Module (1st Squib and 2nd Squib) Circuit

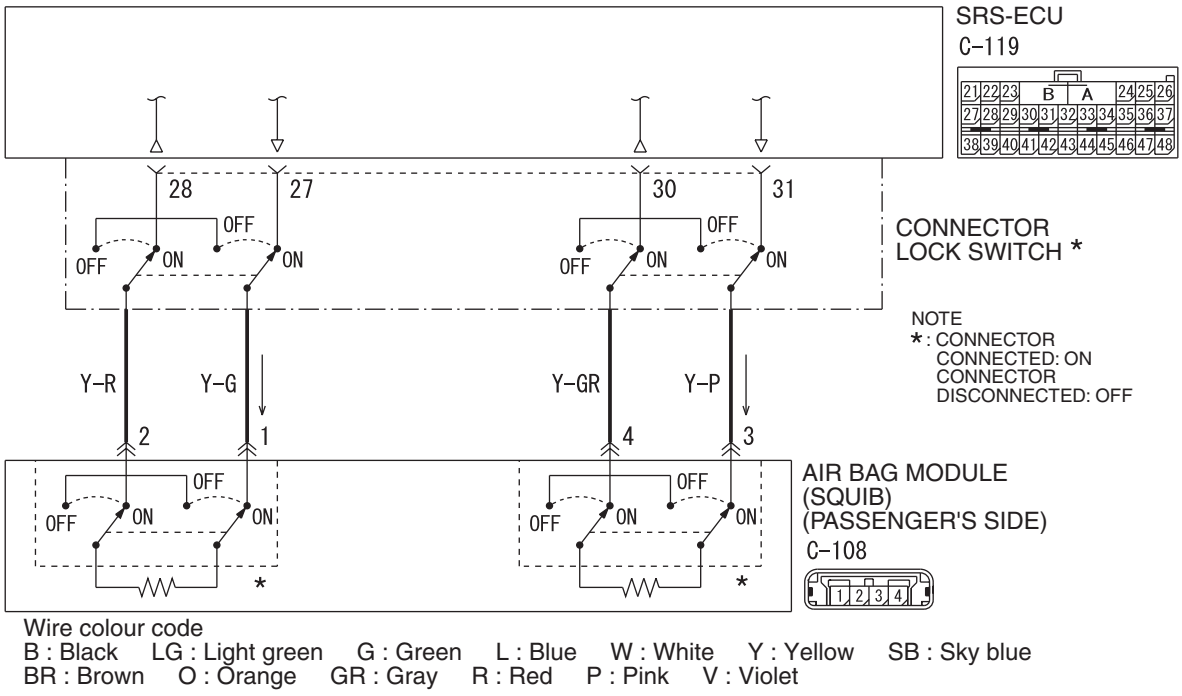

W4X52E003A

⚠ CAUTION

If diagnosis code B1410 <1st squib> or B1490 <2nd squib> is set in the SRS-ECU, always diagnose the CAN main bus line.

OPERATION

- The SRS-ECU judges how severe a collision is by detecting signals from the front impact sensors and the front air bag analogue G-sensor. If the impact is over a predetermined level, the SRS-ECU sends an ignition signal. At this time, if the front air bag safing G-sensor is on, the SRS air bag will inflate.
- The ignition signal is input to the air bag module to inflate the air bag.

DIAGNOSIS CODE SET CONDITIONS

This diagnosis code is set if there is abnormal resistance between the input terminals of the passenger's front air bag module (squib). However, if no diagnosis code reset, the SRS warning lamp will be switched off (diagnosis code will be retained).

Main Index
Group TOC

PROBABLE CAUSES

- Improper engaged connector or defective short spring*
- Short circuit between the passenger's front air bag module (squib) circuit terminals
- Damaged connector(s)
- Malfunction of the SRS-ECU

*NOTE: *: The squib circuit connectors integrate a "short" spring (which prevents the air bag from deploying unintentionally due to static electricity by shorting the positive wire to the earth wire in the squib circuit when the connectors are disconnected). (Refer to P.52B-3). Therefore, if connector C-119 or C-108 is damaged or improperly engaged, the short spring may not be released when the connector is connected.*

DIAGNOSIS PROCEDURE

STEP 1. M.U.T.-III CAN bus diagnostics

Use the M.U.T.-III to diagnose the CAN bus lines.

Q: Is the check result normal?

YES : Go to Step 2 .

NO : Repair the CAN bus line (Refer to GROUP 54F, Diagnosis P.54F-13).

STEP 2. Check whether the diagnosis code is reset.

Check again if the diagnosis code is set.

(1) Erase the diagnosis code.
(2) Ignition: "LOCK" (OFF) position to "ON"
(3) On completion, check that the diagnosis code is not reset.

Q: Is the diagnosis code set?

YES : Go to Step 3 .

NO : There is an intermittent malfunction such as poor engaged connector(s) or open circuit (Refer to GROUP 00, How to Cope with Intermittent Malfunction P.00-5).

STEP 3. M.U.T.-III diagnosis code

⚠ CAUTION

To prevent damage to M.U.T.-III, always turn the ignition switch to the "LOCK" (OFF) position before connecting or disconnecting M.U.T.-III.

(1) Turn the ignition switch to the "ON" position.
(2) Check if the diagnosis code is set.
(3) Turn the ignition switch to the "LOOK" (OFF) position.

Q: Is diagnosis code B1519 set?

YES : Go to Step 4 .

NO : Go to Step 5 .

STEP 4. Connector check: SRS-ECU connector C-119.

Q: Is the connector correctly engaged?
YES : Go to Step 5 .
NO : Engage the connector correctly. Then go to Step 9 .

STEP 5. Connector check: SRS-ECU connector C-119 and passenger's (front) air bag module connector C-108 (M.U.T.-III diagnosis code).

(1) Disconnect the negative battery terminal.

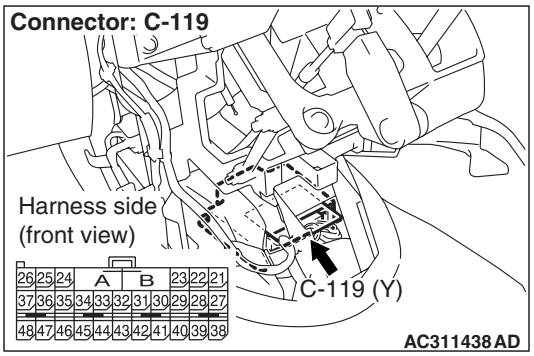

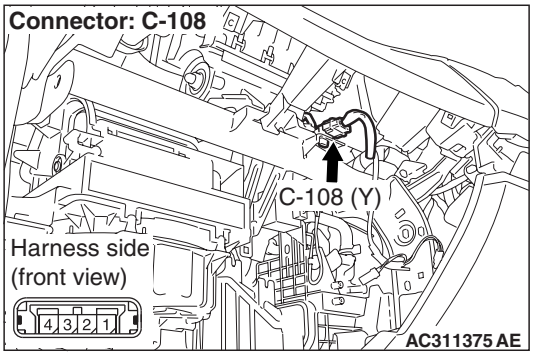

(2) Disconnect connectors C-119 and C-108, and then reconnect them.

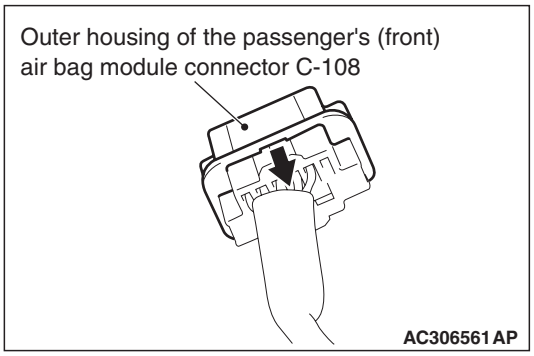

(3) Slide the outer housing of the clock spring side of passenger's (front) air bag module connector C-108 in the arrow direction shown, and disconnect the connector.
(4) Connect the negative battery terminal.
(5) Erase the diagnosis code memory, and check the diagnosis code.

Q: Is diagnosis code B1410 <1st squib> or B1490 <2nd squib> set?
YES : Go to Step 6 .
NO : The procedure is complete. It is assumed that diagnosis code B1410 <1st squib> or B1490 <2nd squib> set as connector C-119 or C-108 was engaged improperly.

STEP 6. Check the passenger's (front) air bag module (M.U.T.-III diagnosis code).

(1) Disconnect the negative battery terminal.

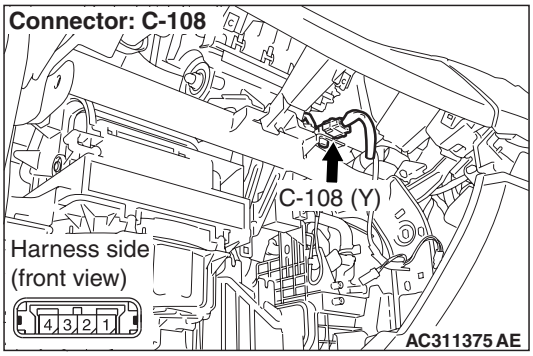

(2) Disconnect the passenger's air bag module connector C-108.

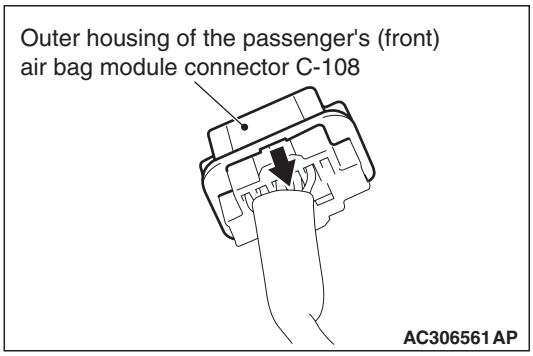

(3) Slide the outer housing of the clock spring side of passenger's (front) air bag module connector C-108 in the arrow direction shown, and disconnect the connector.

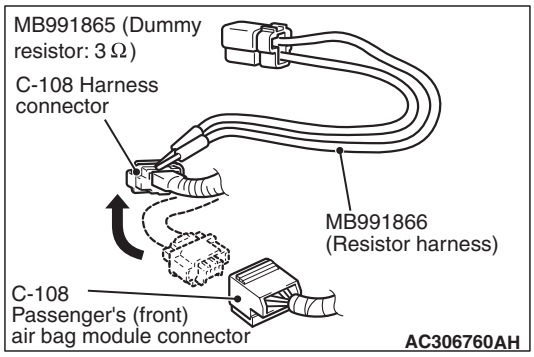

(4) Connect special tool dummy resistor (MB991865) to special tool resistor harness (MB991866).

⚠ CAUTION

Do not insert a test probe into the terminal from its front side directly as the connector contact pressure may be weakened.

(5) Insert special tool MB991866 into the harness side connector C-108 (terminal No.1 and 2 <1st squib> or terminal No.3 and 4 <2nd squib>) by backprobing.

(6) Connect the negative battery terminal.

⚠ CAUTION

Always diagnosis code B1491 is set when checking diagnosis code B1410. This is because the second side terminal is isolated when checking it, diagnosis code B1491 is set but this is not a fault. In addition, always diagnosis code B1411 is set when checking diagnosis code B1490 because the first side terminal is isolated.

(7) Erase the diagnosis code memory, and check the diagnosis code.

Q: Is the checked diagnosis code set?

YES : Go to Step 7 .

NO : Replace the passenger's (front) air bag module (Refer to P.52B-334). Then go to Step 9 .

STEP 7. Check the passenger's (front) air bag module circuit at SRS-ECU connector C-119.

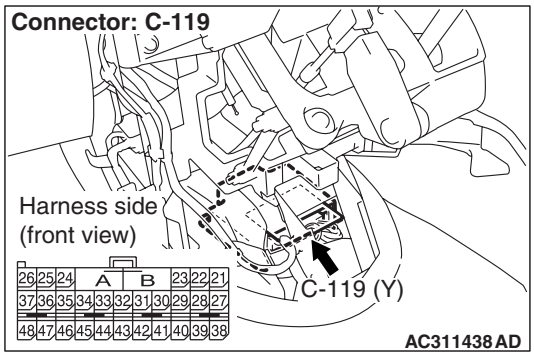

(1) Disconnect SRS-ECU connector C-119.

⚠ *DANGER*

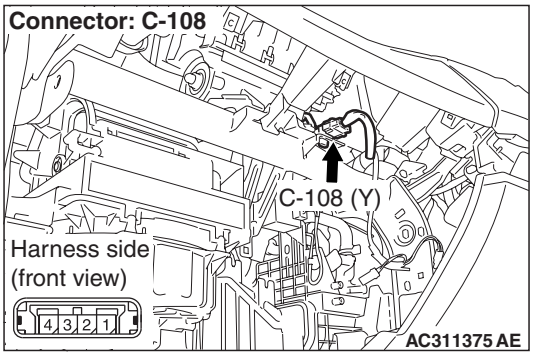

To prevent the air bag from deploying unintentionally, disconnect the passenger's air bag module connector C-108 to short the squib circuit.

(2) Disconnect the passenger's (front) air bag module connector C-108.

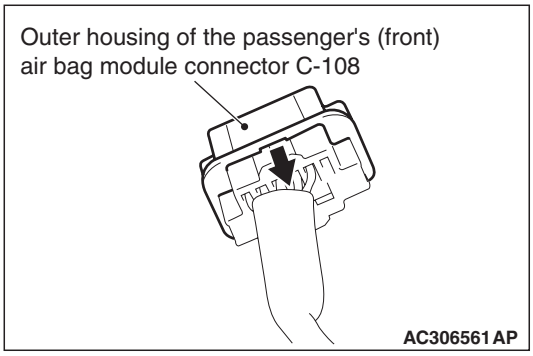

(3) Slide the outer housing of the clock spring side of passenger's (front) air bag module connector C-108 in the arrow direction shown, and disconnect the connector.

⚠ CAUTION

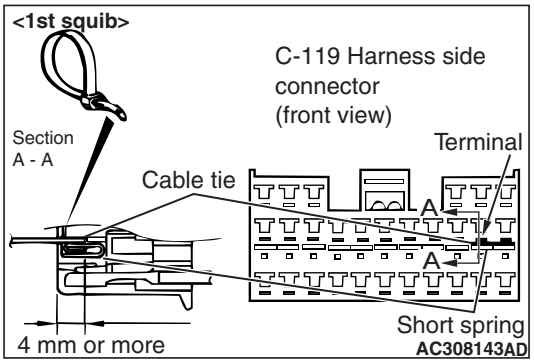

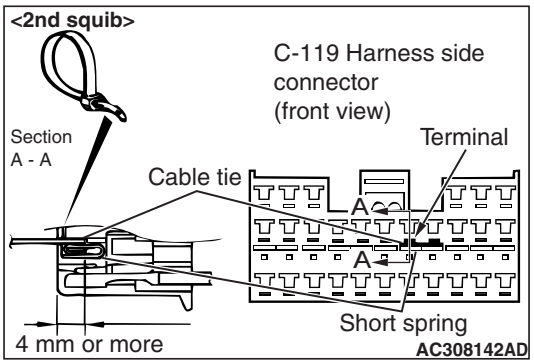

Insert an insulator such as a cable tie to a depth of 4mm or more, otherwise the short spring will not be released.

(4) Insert a cable tie [3 mm wide, 0.5 mm thick] between terminals 27 and 28 <1st squib> or 30 and 31 <2nd squib>, and the short spring to release the short spring.

⚠ CAUTION

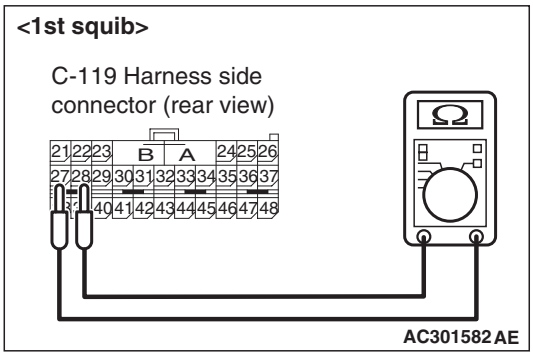

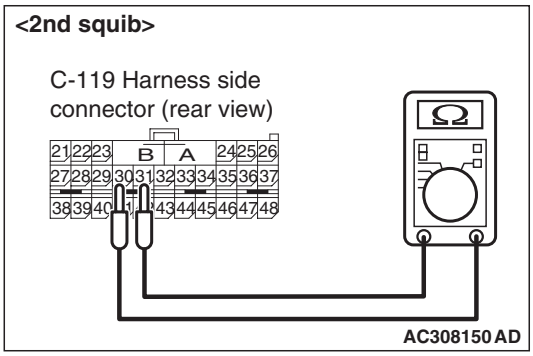

Do not insert a test probe into the terminal from its front side directly as the connector contact pressure may be weakened.

(5) Check for continuity between C-119 harness side connector terminals 27 and 28 <1st squib> or 30 and 31 <2nd squib>.

OK: Open circuit

Q: Is the check result normal?

YES : Erase the diagnosis code memory, and check the diagnosis code. If diagnosis code B1410 <1st squib> or B1490 <2nd squib> set, replace the SRS-ECU (Refer to P.52B-332). Then go to Step 9 .

NO : Go to Step 8 .

Main Index
Group TOC

STEP 8. Check the harness for short circuit between SRS-ECU connector C-119 (terminal No.27 and 28 <1st squib> or terminal No.30 and 31 <2nd squib>) and passenger's (front) air bag module connector C-108 (terminal No.1 and 2 <1st squib> terminal No.4 and 3 <2nd squib>).

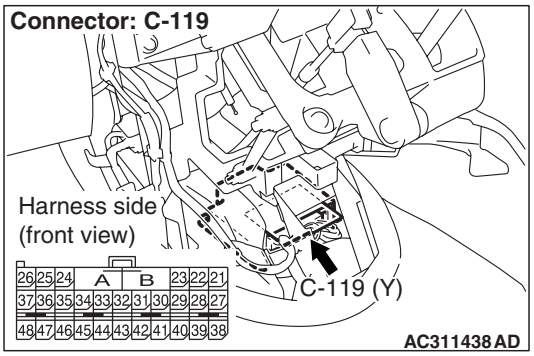

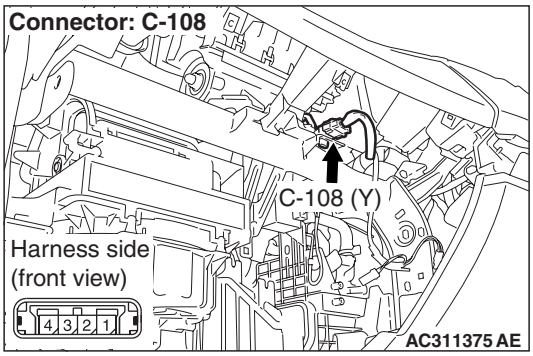

Q: Are harness wires between SRS-ECU connector C-119 (terminal No.27 and 28 <1st squib> or terminal No.30 and 31 <2nd squib>) and passenger's (front) air bag module connector C-108 (terminal No.1 and 2 <1st squib> terminal No.4 and 3 <2nd squib>) in good condition?

YES : . Go to Step 9 .

NO : . Replace the harness wires between SRS-ECU connector C-119 and passenger’s (front) air bag module connector C-108. Then go to Step 9 .

STEP 9. Check whether the diagnosis code is reset.

Q: Is diagnosis code B1410 <1st squib> or B1490 <2nd squib> set?

YES : Return to Step 1.

NO : The procedure is complete.

Main Index
Group TOC

Code No.B1411: Passenger's (Front) Air Bag Module (1st Squib) System Fault 2 (Open in the Squib Circuit)
Code No.B1491: Passenger's (Front) Air Bag Module (2nd Squib) System Fault 2 (Open in the Squib Circuit)

Passenger's (Front) Air Bag Module (1st Squib and 2nd Squib) Circuit

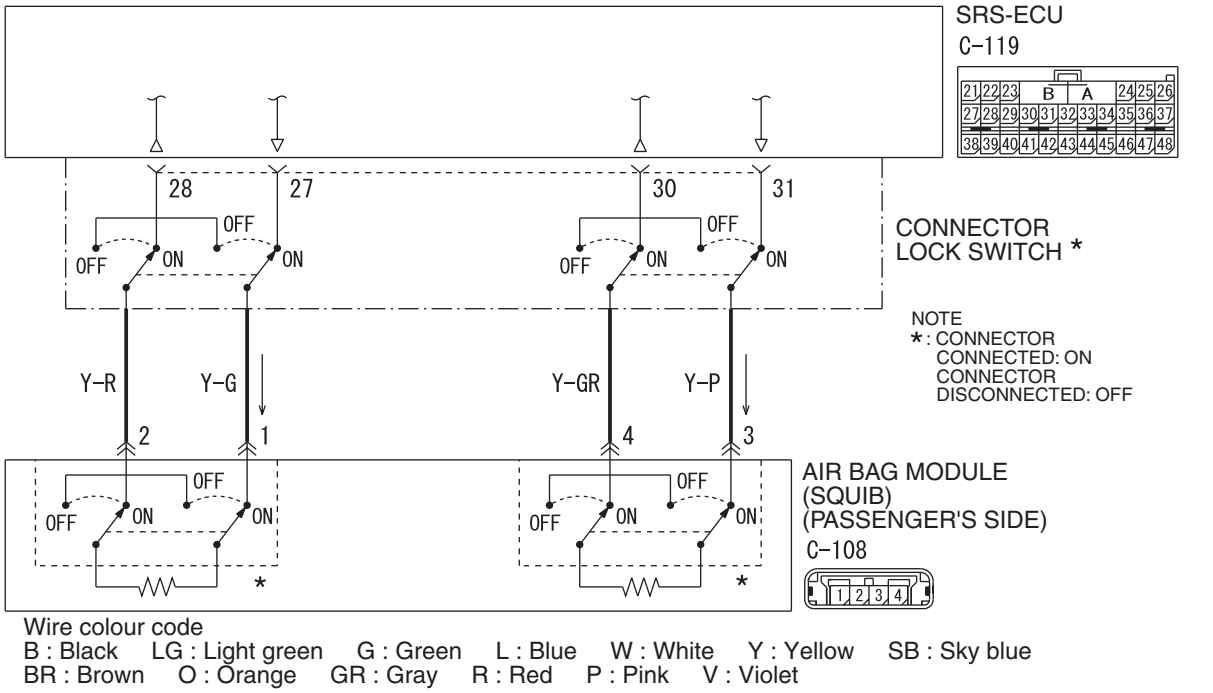

W4X52E003A

⚠ CAUTION

If diagnosis code B1411 <1st squib> or B1491 <2nd squib> is set in the SRS-ECU, always diagnose the CAN main bus line.

OPERATION

- The SRS-ECU judges how severe a collision is by detecting signals from the front impact sensors and the front air bag analogue G-sensor. If the impact is over a predetermined level, the SRS-ECU sends an ignition signal. At this time, if the front air bag safing G-sensor is on, the SRS air bag will inflate.
- The ignition signal is input to the air bag module via the clock spring to inflate the air bag.

DIAGNOSIS CODE SET CONDITIONS

This diagnosis code is set if there is abnormal resistance between the input terminals of the passenger's (front) air bag module (squib). However, if no diagnosis code reset, the SRS warning lamp will be switched off (diagnosis code will be retained).

PROBABLE CAUSES

- Open circuit in the passenger's (front) air bag module (squib) circuit
- Improper connector contact
- Malfunction of the SRS-ECU

DIAGNOSIS PROCEDURE

STEP 1. M.U.T.-III CAN bus diagnostics

Use the M.U.T.-III to diagnose the CAN bus lines.

Q: Is the check result normal?

YES : Go to Step 2.

NO : Repair the CAN bus line (Refer to GROUP 54F, Diagnosis P.54F-13).

STEP 2. Check whether the diagnosis code is reset.

Check again if the diagnosis code is set.

(1) Erase the diagnosis code.
(2) Ignition: "LOCK" (OFF) position to "ON"
(3) On completion, check that the diagnosis code is not reset.

Q: Is the diagnosis code set?

YES : Go to Step 3.

NO : There is an intermittent malfunction such as poor engaged connector(s) or open circuit (Refer to GROUP 00, How to Cope with Intermittent Malfunction P.00-5).

STEP 3. Check the passenger's (front) air bag module (M.U.T.-III diagnosis code).

(1) Disconnect the negative battery terminal.

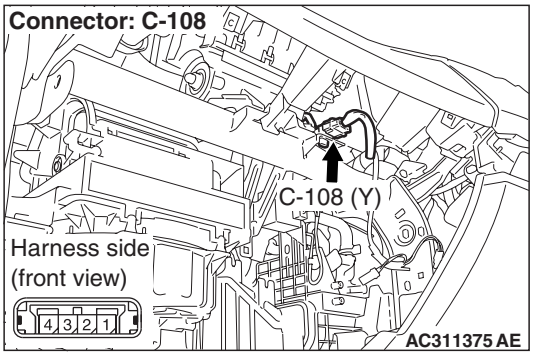

(2) Disconnect the passenger's (front) air bag module connector C-108.

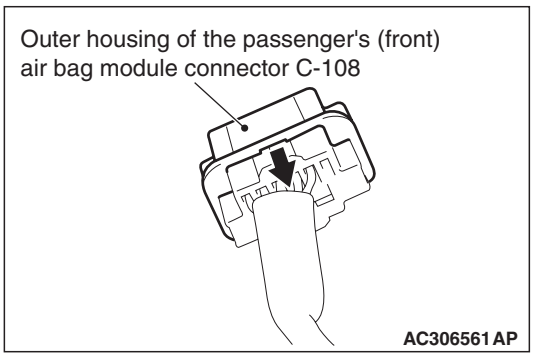

(3) Slide the outer housing of the clock spring side of passenger's (front) air bag module connector C-108 in the arrow direction shown, and disconnect the connector.

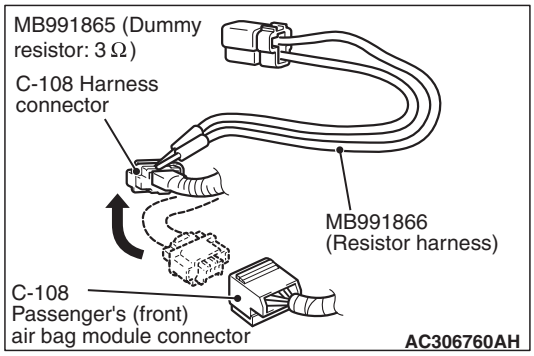

(4) Connect special tool dummy resistor (MB991865) to special tool resistor harness (MB991866).

⚠ CAUTION

Do not insert a test probe into the terminal from its front side directly, as the connector contact pressure may be weakened.

(5) Insert special tool MB991866 into the harness side connector C-108 (terminal No.1 and 2 <1st squib> or terminal No.3 and 4 <2nd squib>) by backprobing.
(6) Connect the negative battery terminal.

⚠ CAUTION

Always diagnosis code B1491 is set when checking diagnosis code B1411. This is because the second side terminal is isolated when checking it, diagnosis code B1491 is set but this is not a fault. In addition, always diagnosis code B1411 is set when checking diagnosis code B1491 because the first side terminal is isolated.

(7) Erase the diagnosis code memory, and check the diagnosis code.

Q: Is the checked diagnosis code set?

YES : Go to Step 4.

NO : Replace the passenger's air bag module (Refer to P.52B-334). Then go to Step 5.

STEP 4. Resistance measurement between SRS-ECU connector C-119 (terminal No.27 and 28 <1st squib> or terminal No.30 and 31 <2nd squib>) and the passenger's (front) air bag module connector C-108 (terminal No.1 and 2 <1st squib> or terminal No.4 and 3 <2nd squib>).

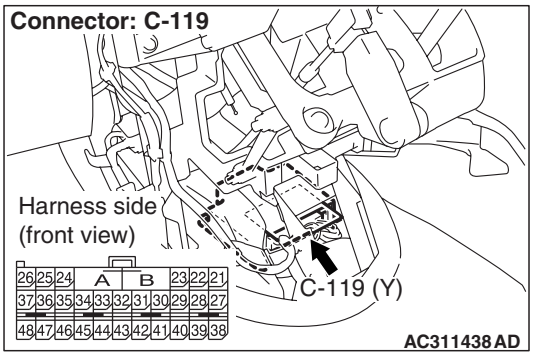

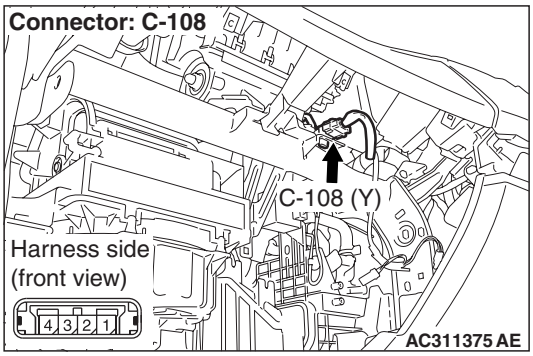

(1) Disconnect SRS-ECU connector C-119 and passenger's (front) air bag module connector C-108.

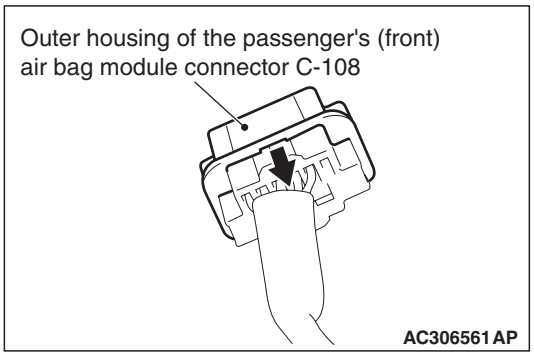

(2) Slide the outer housing of the clock spring side of passenger's (front) air bag module connector C-108 in the arrow direction shown, and disconnect the connector.

⚠ CAUTION

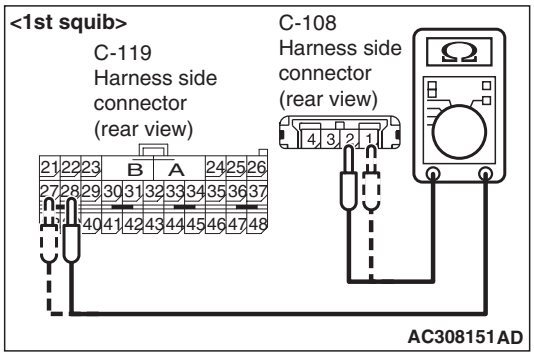

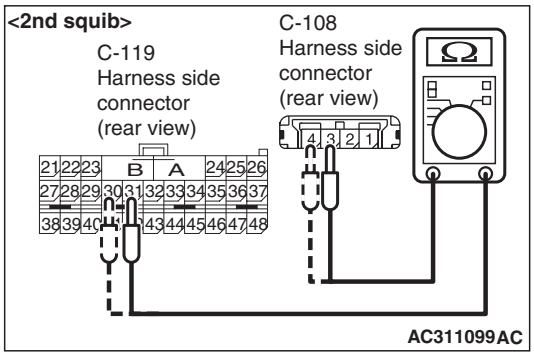

Do not insert a test probe into the terminal from its front side directly as the connector contact pressure may be weakened.

(3) Check for continuity between the following terminals.

<1st squib>

- SRS-ECU connector C-119 (terminal No.27) and the passenger's (front) air bag module connector C-108 (terminal No.1)
- SRS-ECU connector C-119 (terminal No.28) and the passenger's (front) air bag module connector C-108 (terminal No.2)

<2nd squib>

- SRS-ECU connector C-119 (terminal No.30) and the passenger's (front) air bag module connector C-108 (terminal No.4)
- SRS-ECU connector C-119 (terminal No.31) and the passenger's (front) air bag module connector C-108 (terminal No.3)

OK: Less than 2 Ω

Q: Are the check results normal?

YES : Erase the diagnosis code memory, and check the diagnosis code. If diagnosis code B1411 <1st squib> or B1491 <2nd squib> set, replace the SRS-ECU (Refer to P.52B-332). Then go to Step 5.

NO : Replace the harness wires between SRS-ECU connector C-119 and passenger's (front) air bag module connector C-108. Then go to Step 5.

STEP 5. Check whether the diagnosis code is reset.

Q: Is diagnosis code B1411 <1st squib> or B1491 <2nd squib> set?

YES : Return to Step 1.

NO : The procedure is complete.

Code No.B1412: Passenger's (Front) Air Bag Module (1st Squib) System Fault for Earth Circuit (Short-Circuited to Earth)
Code No.B1492: Passenger's (Front) Air Bag Module (2nd Squib) System Fault for Earth Circuit (Short-Circuited to Earth)

Passenger's (Front) Air Bag Module (1st Squib and 2nd Squib) Circuit

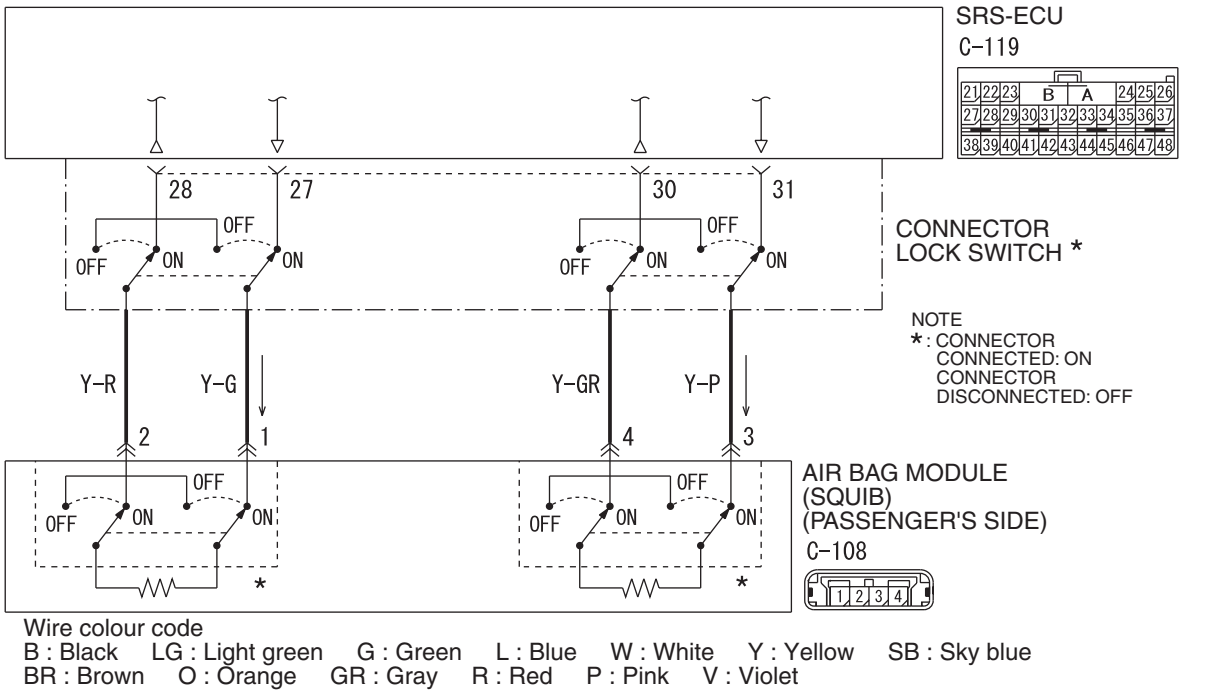

W4X52E003A

⚠ CAUTION

If diagnosis code B1412 <1st squib> or B1492 <2nd squib> is set in the SRS-ECU, always diagnose the CAN main bus line.

OPERATION

- The SRS-ECU judges how severe a collision is by detecting signals from the front impact sensors and the front air bag analogue G-sensor. If the impact is over a predetermined level, the SRS-ECU sends an ignition signal. At this time, if the front air bag safing G-sensor is on, the SRS air bag will inflate.
- The ignition signal is input to the air bag module via the clock spring to inflate the air bag.

DIAGNOSIS CODE SET CONDITIONS

This diagnosis code is set if there is abnormal resistance between the input terminals of the passenger's (front) air bag module (squib). However, if no diagnosis code resets, the SRS warning lamp will be switched off (diagnosis code will be retained).

PROBABLE CAUSES

- Damaged harness wires and connectors
- Short to the earth in the passenger's (front) air bag module (squib) harness
- Malfunction of the SRS-ECU

DIAGNOSIS PROCEDURE

STEP 1. M.U.T.-III CAN bus diagnostics

Use the M.U.T.-III to diagnose the CAN bus lines.

Q: Is the check result normal?

YES : Go to Step 2.

NO : Repair the CAN bus line (Refer to GROUP 54F, Diagnosis P.54F-13).

STEP 2. Check whether the diagnosis code is reset.

Check again if the diagnosis code is set.

(1) Erase the diagnosis code.

(2) Ignition: "LOCK" (OFF) position to "ON"

(3) On completion, check that the diagnosis code is not reset.

Q: Is the diagnosis code set?

YES : Go to Step 3.

NO : There is an intermittent malfunction such as poor engaged connector(s) or open circuit (Refer to GROUP 00, How to Cope with Intermittent Malfunction P.00-5).

STEP 3. Check the passenger's (front) air bag module (M.U.T.-III diagnosis code).

(1) Disconnect the negative battery terminal.

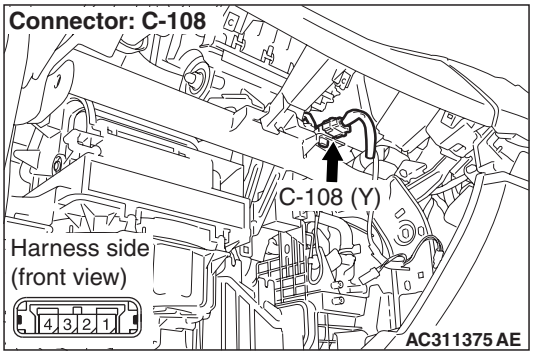

(2) Disconnect the passenger's (front) air bag module connector C-108.

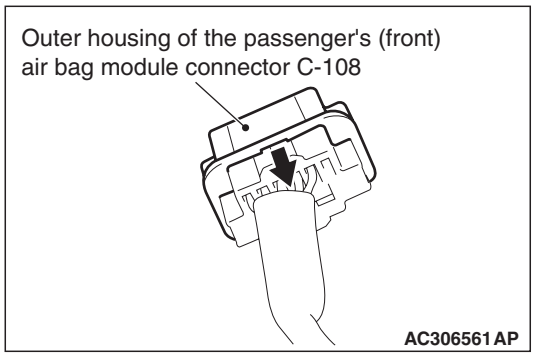

(3) Slide the outer housing of the clock spring side of passenger's (front) air bag module connector C-108 in the arrow direction shown, and disconnect the connector.

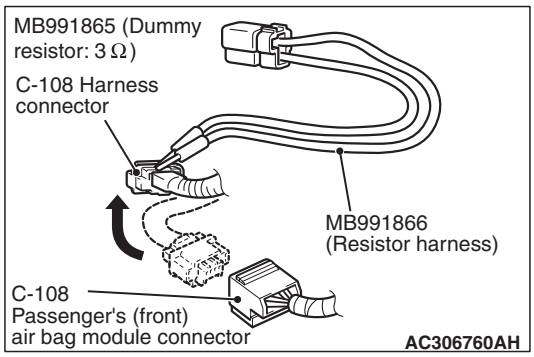

(4) Connect special tool dummy resistor (MB991865) to special tool resistor harness (MB991866).

⚠ CAUTION

Do not insert a test probe into the terminal from its front side directly, as the connector contact pressure may be weakened.

(5) Insert special tool MB991866 into the harness side connector C-108 (terminal No.1 and 2 <1st squib> or terminal No.3 and 4 <2nd squib>) by backprobing.

(6) Connect the negative battery terminal.

⚠ CAUTION

Always diagnosis code B1491 is set when checking diagnosis code B1412. This is because the second side terminal is isolated when checking it, diagnosis code B1492 is set but this is not a fault. In addition, always diagnosis code B1411 is set when checking diagnosis code B1492 because the first side terminal is isolated.

(7) Erase the diagnosis code memory, and check the diagnosis code.

Q: Is the checked diagnosis code set?

YES : Go to Step 4.

NO : Replace the passenger's (front) air bag module (Refer to P.52B-334). Then go to Step 5.

STEP 4. Check the passenger's (front) air bag module circuit. Resistance measurement at the SRS-ECU connector C-119.

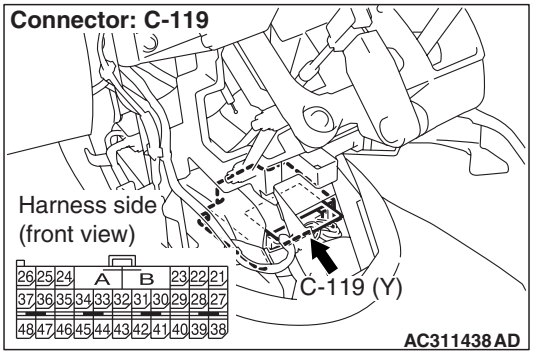

(1) Disconnect SRS-ECU connector C-119.

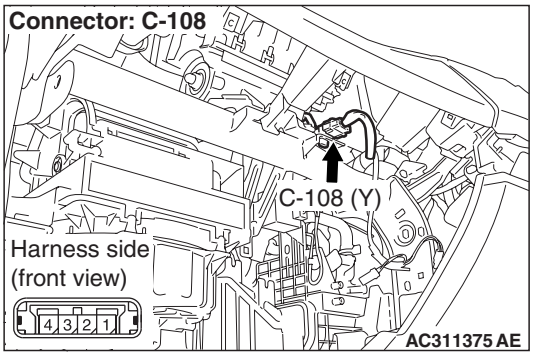

(2) Disconnect the passenger's (front) air bag module connector C-108.

⚠ CAUTION

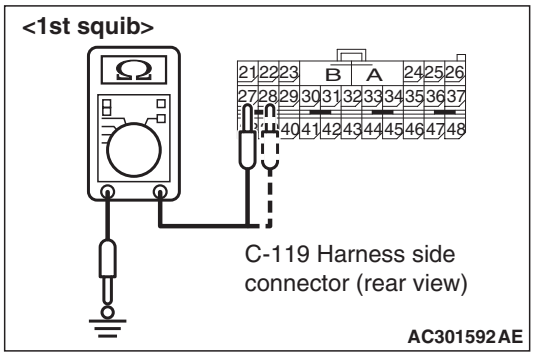

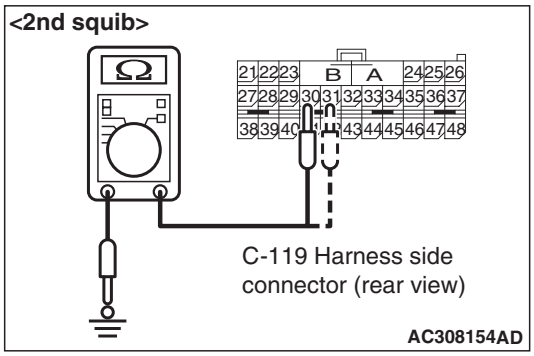

Do not insert a test probe into the terminal from its front side directly, as the connector contact pressure may be weakened.

(3) Check for continuity between C-119 harness side connector terminals 27 and 28 <1st squib> or 30 and 31 <2nd squib>, and body earth.

OK: Open circuit

Q: Is the check result normal?

YES : Erase the diagnosis code memory, and check the diagnosis code. If diagnosis code B1412 <1st squib> B1492 <2nd squib> sets, replace the SRS-ECU (Refer to P.52B-332). Then go to Step 5.

NO : Replace the harness wires between SRS-ECU connector C-119 and passenger's (front) air bag module connector C-108. Then go to Step 5.

STEP 5. Check whether the diagnosis code is reset.

Q: Is diagnosis code B1412 <1st squib> B1492 <2nd squib> set?

YES : Return to Step 1.

NO : The procedure is complete.

Main Index
Group TOC

Code No.B1413 Passenger's (Front) Air Bag Module (1st Squib) System Fault for Power Supply Circuit (Short-Circuited to Power Supply)
Code No.B1493: Passenger's (Front) Air Bag Module (2nd Squib) System Fault for Power Supply Circuit (Short-Circuited to Power Supply)

Passenger's (Front) Air Bag Module (1st Squib and 2nd Squib) Circuit

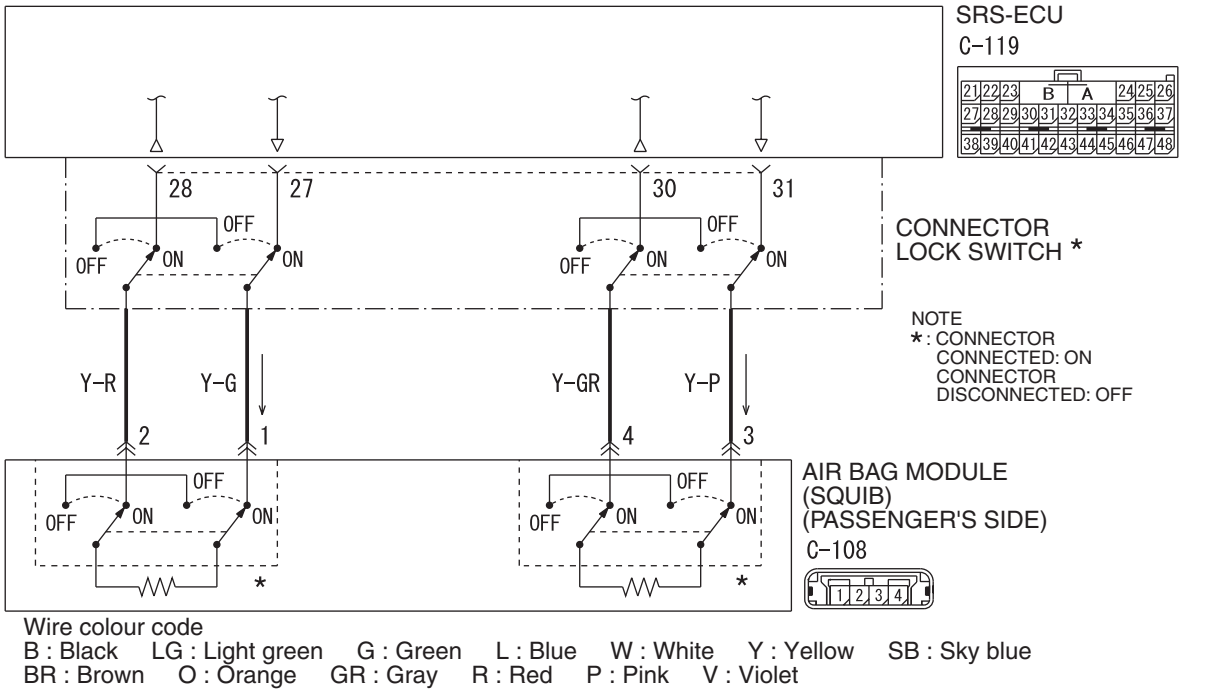

W4X52E003A

⚠ CAUTION

If diagnosis code B1413 <1st squib> or B1493 <2nd squib> is set in the SRS-ECU, always diagnose the CAN main bus line.

OPERATION

- The SRS-ECU judges how severe a collision is by detecting signals from the front impact sensors and the front air bag analogue G-sensor. If the impact is over a predetermined level, the SRS-ECU sends an ignition signal. At this time, if the front air bag safing G-sensor is on, the SRS air bag will inflate.
- The ignition signal is input to the air bag module to inflate the air bag.

DIAGNOSIS CODE SET CONDITIONS

This diagnosis code is set if there is abnormal resistance between the input terminals of the passenger's (front) air bag module (squib). However, if no diagnosis code resets, the SRS warning lamp will be switched off (diagnosis code will be retained).

PROBABLE CAUSES

- Damaged harness wires and connectors
- Short to the power supply in the passenger's (front) air bag module (squib) harness
- Malfunction of the SRS-ECU

DIAGNOSIS PROCEDURE

STEP 1. M.U.T.-III CAN bus diagnostics

Use the M.U.T.-III to diagnose the CAN bus lines.

Q: Is the check result normal?

YES : Go to Step 2.

NO : Repair the CAN bus line (Refer to GROUP 54F, Diagnosis P.54F-13).

STEP 2. Recheck for diagnosis code.

Check again if the diagnosis code is set.

(1) Erase the diagnosis code.
(2) Ignition: "LOCK" (OFF) position to "ON"
(3) On completion, check that the diagnosis code is not reset.

Q: Is the diagnosis code set?

YES : Go to Step 3.

NO : There is an intermittent malfunction such as poor engaged connector(s) or open circuit (Refer to GROUP 00, How to Cope with Intermittent Malfunction P.00-5).

STEP 3. Check the passenger's (front) air bag module (M.U.T.-III diagnosis code).

(1) Disconnect the negative battery terminal.

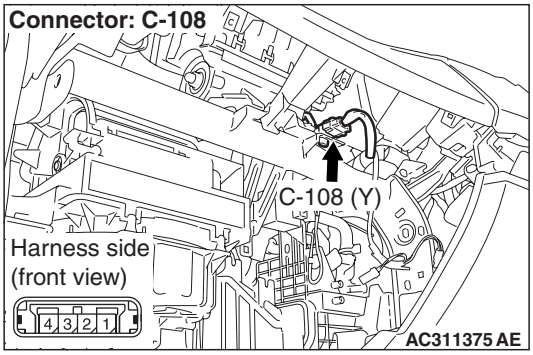

(2) Disconnect the passenger's (front) air bag module connector C-108.

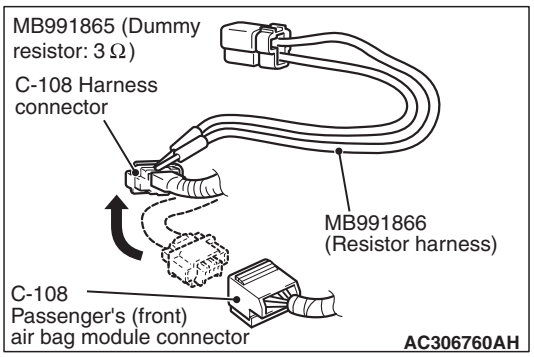

(3) Connect special tool dummy resistor (MB991865) to special tool resistor harness (MB991866).

⚠ CAUTION

Do not insert a test probe into the terminal from its front side directly, as the connector contact pressure may be weakened.

(4) Insert special tool MB991866 into the harness side connector C-108 (terminal No.1 and 2 <1st squib> or terminal No.3 and 4 <2nd squib>) by backprobing.
(5) Connect the negative battery terminal.

⚠ CAUTION

Always diagnosis code B1491 is set when checking diagnosis code B1413. This is because the second side terminal is isolated when checking it, diagnosis code B1491 is set but this is not a fault. In addition, always diagnosis code B1411 is set when checking diagnosis code B1493 because the first side terminal is isolated.

(6) Erase the diagnosis code memory, and check the diagnosis code.

Q: Is the checked diagnosis code set?

YES : Go to Step 4.

NO : Replace the passenger's (front) air bag module (Refer to P.52B-334). Then go to Step 5.

STEP 4. Check the passenger's (front) air bag module circuit. Measure the voltage at the SRS-ECU connector C-119.

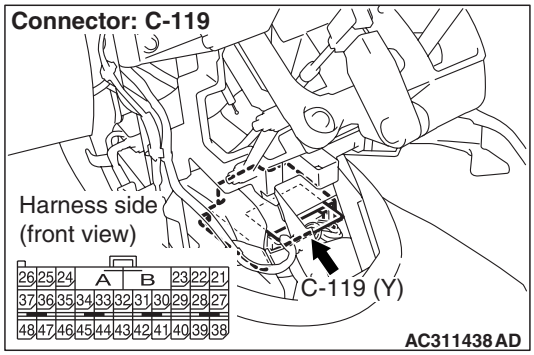

(1) Disconnect SRS-ECU connector C-119.

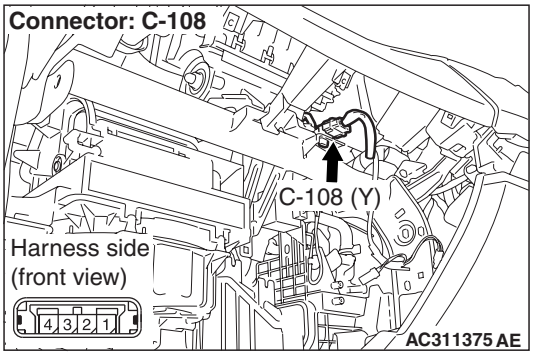

(2) Disconnect the passenger's (front) air bag module connector C-108.

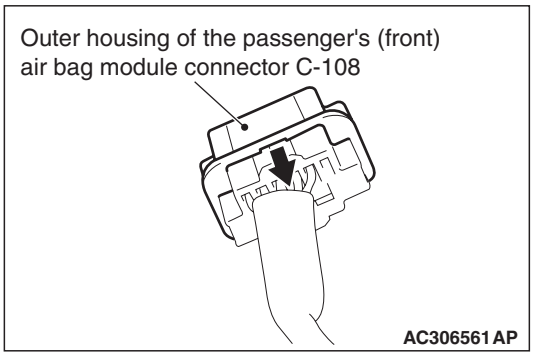

(3) Slide the outer housing of the clock spring side of passenger's (front) air bag module connector C-108 in the arrow direction shown, and disconnect the connector.
(4) Turn the ignition switch to the "ON" position.

⚠ CAUTION

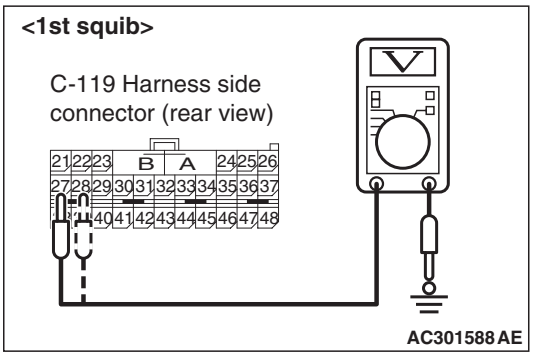

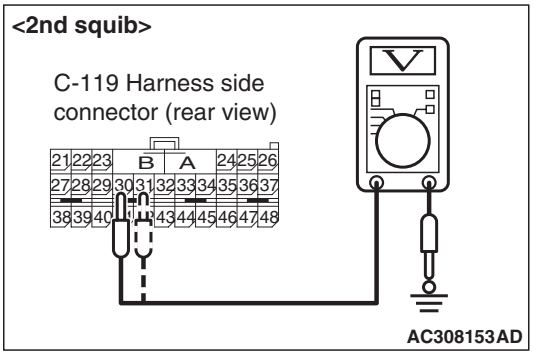

Do not insert a test probe into the terminal from its front side directly, as the connector contact pressure may be weakened.

(5) Measure the voltage between C-119 harness side connector terminals 27 and 28 <1st squib> or 30 and 31 <2nd squib> and body earth.

OK: 0 V

Q: Is the check result normal?

YES : Erase the diagnosis code memory, and check the diagnosis code. If diagnosis code B1413 <1st squib> B1493 <2nd squib> sets, replace the SRS-ECU (Refer to P.52B-332). Then go to Step 5.

NO : Replace the harness wires between SRS-ECU connector C-119 and passenger's (front) air bag module connector C-109. Then go to Step 5.

STEP 5. Check whether the diagnosis code is reset.

Q: Is diagnosis code B1413 <1st squib> B1493 <2nd squib> set?

YES : Return to Step 1.

NO : The procedure is complete.

Main Index
Group TOC

Code No.B1417: Front Impact Sensor (LH) Power Supply Circuit System

Front Impact Sensor Circuit

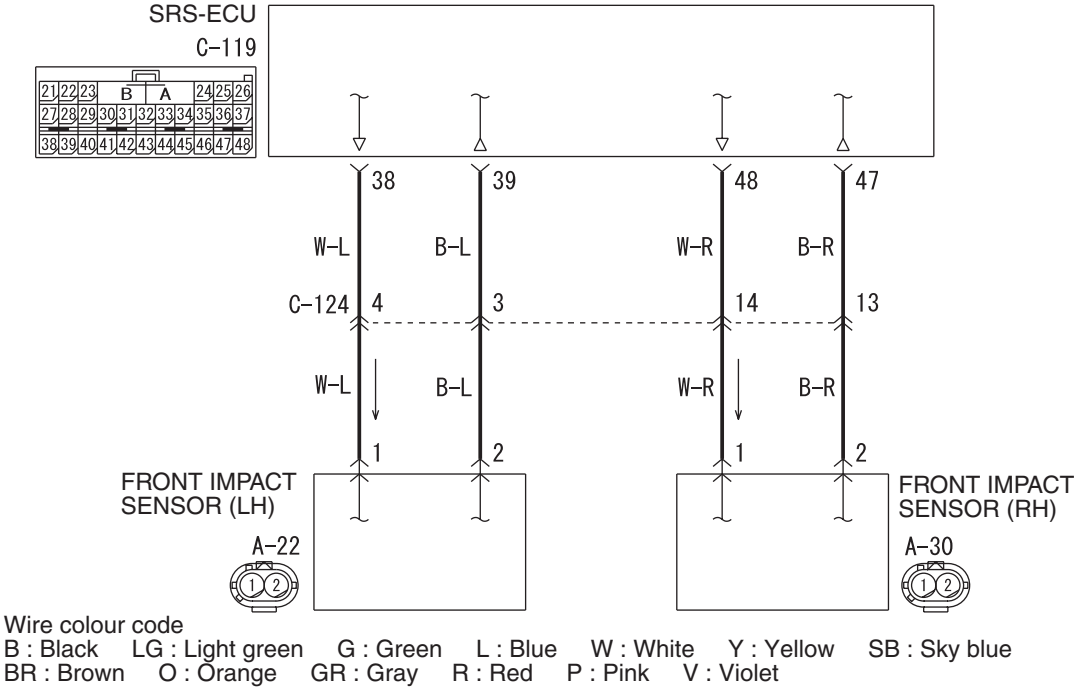

W4X52E004A

⚠ CAUTION

If diagnosis code B1417 is set in the SRS-ECU, always diagnose the CAN main bus line.

OPERATION

The front impact sensor includes an analog G-sensor and CPU, etc. The CPU monitors the analog G-sensor output signal. If the CPU judges that the front air bags should be deployed, it sends a fire signal to the SRS-ECU to deploy the front air bags. In addition, the CPU diagnoses the internal components of the front impact sensor. If a malfunction occurs, it requests the SRS-ECU to set a diagnosis code.

DIAGNOSIS CODE SET CONDITIONS

This diagnosis code will set when the power supply voltage to the front impact sensor (LH) remains less than a predetermined value for five seconds. However, if the system returns to normal condition, code number B1417 will be erased automatically and the SRS warning lamp will go out.

PROBABLE CAUSES

- Damaged wiring harness or connectors
- Malfunction of the front impact sensor (LH)
- Malfunction of the SRS-ECU

DIAGNOSIS PROCEDURE

STEP 1. M.U.T.-III CAN bus diagnostics

Use the M.U.T.-III to diagnose the CAN bus lines.

Q: Is the check result normal?

YES : Go to Step 2.

NO : Repair the CAN bus line (Refer to GROUP 54F, Diagnosis P.54F-13).

STEP 2. Check whether the diagnosis code is reset.

Check again if the diagnosis code is set.

(1) Erase the diagnosis code.
(2) Ignition: "LOCK" (OFF) position to "ON"
(3) On completion, check that the diagnosis code is not reset.

Q: Is the diagnosis code set?

YES : Go to Step 3.

NO : There is an intermittent malfunction such as poor engaged connector(s) or open circuit (Refer to GROUP 00, How to Cope with Intermittent Malfunction P.00-5).

Main Index
Group TOC

STEP 3. Check the harness wires for open circuit or short circuit between SRS-ECU connector C-119 (terminal No.38 and 39) and front impact sensor (LH) connector A-22 (terminal No.1 and 2).

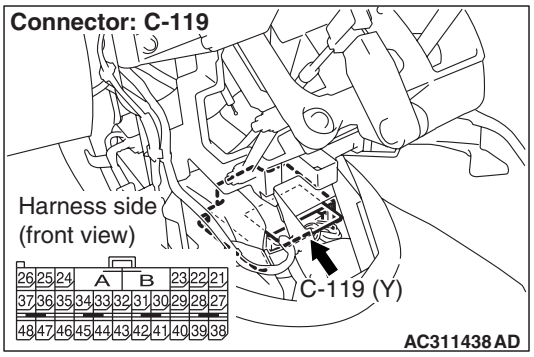

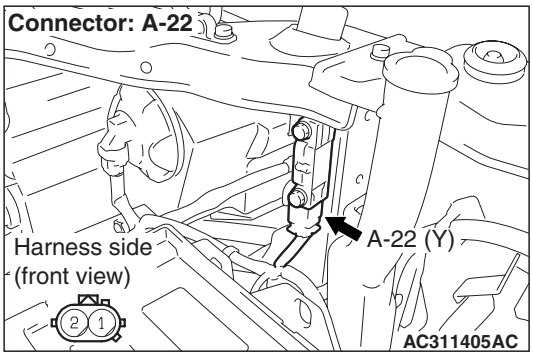

NOTE:

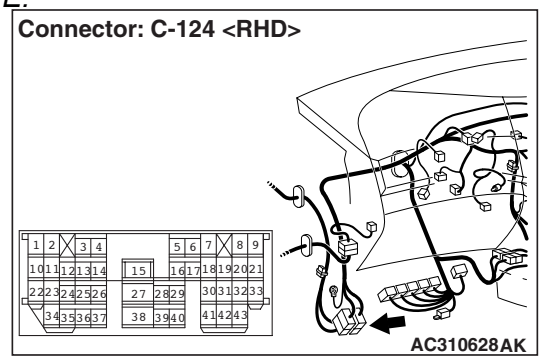

After inspecting intermediate connector C-124 inspect the wiring harness. If the intermediate connector C-124 is damaged, repair or replace it.

Q: Are the harness wires between SRS-ECU connector C-119 (terminal No.38 and 39) and front impact sensor (LH) (front) connector A-22 (terminal No.1 and 2) in good condition?

YES : . Go to Step 4.

NO : . Repair the harness wires between SRS-ECU connector C-119 (terminal No.38 and 39) and front impact sensor (LH) connector A-22 (terminal No.1 and 2).

STEP 4. Check the front impact sensor (LH) (M.U.T.-III diagnosis code).

(1) Disconnect the negative battery terminal.
(2) Replace the front impact sensor (LH) with the front impact sensor (RH).
(3) Connect the negative battery terminal.
(4) Erase diagnosis code memory, and check the diagnosis code.

Q: Is diagnosis code B1417 set?

YES : Replace the SRS-ECU (Refer to P.52B-332).

NO : Replace the front impact sensor (LH) with a new one (Refer to P.52B-330). Then go to Step 5.

STEP 5. Check whether the diagnosis code is reset.

Q: Is diagnosis code B1417 set?

YES : Replace the SRS-ECU (Refer to P.52B-332).

NO : An intermittent malfunction is suspected (Refer to GROUP 00, How to Use Troubleshooting/Inspection Service Points P.00-5).

Main Index
Group TOC

Code No.B1418: Front Impact Sensor (LH) (Squib) for Power Supply Circuit
Code No.B1419: Front Impact Sensor (LH) (Squib) for Communication System

Front Impact Sensor Circuit

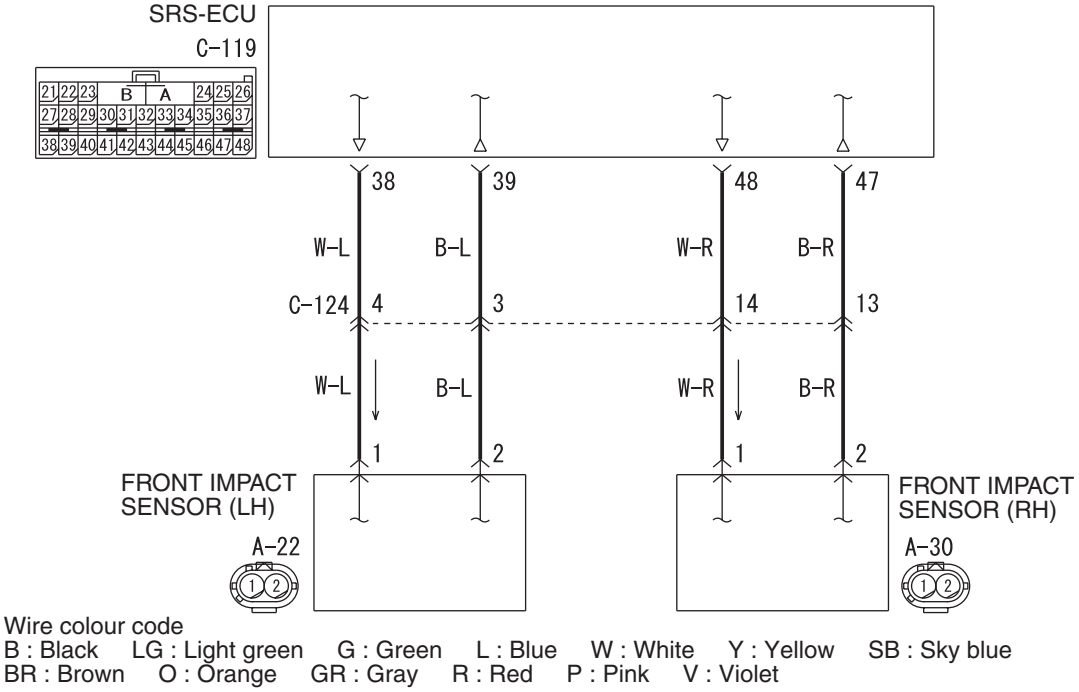

⚠ CAUTION

If diagnosis code B1418 or B1419 is set in the SRS-ECU, always diagnose the CAN main bus line.

OPERATION

The front impact sensor includes an analog G-sensor and CPU, etc. The CPU monitors the analogue G-sensor output signal. If the CPU judges that the front air bags should be deployed, it sends a fire signal to the SRS-ECU to deploy the front air bags. In addition, the CPU diagnoses the internal components of the front impact sensor. If a malfunction occurs, it requests the SRS-ECU to set a diagnosis code.

DIAGNOSIS CODE SET CONDITIONS

These diagnosis codes are set if communication between the front impact sensor (LH) and the SRS-ECU is not possible or faulty.

PROBABLE CAUSES

- Damaged wiring harnesses or connectors
- Malfunction of the front impact sensor (LH)
- Malfunction of the SRS-ECU

DIAGNOSIS PROCEDURE

STEP 1. M.U.T.-III CAN bus diagnostics

Use the M.U.T.-III to diagnose the CAN bus lines.

Q: Is the check result normal?

YES : Go to Step 2 .

NO : Repair the CAN bus line (Refer to GROUP 54F, Diagnosis P.54F-13).

STEP 2. Check whether the diagnosis code is reset.

Check again if the diagnosis code is set.

(1) Erase the diagnosis code.
(2) Ignition: "LOCK" (OFF) position to "ON"
(3) On completion, check that the diagnosis code is not reset.

Q: Is the diagnosis code set?

YES : Go to Step 3 .

NO : There is an intermittent malfunction such as poor engaged connector(s) or open circuit (Refer to GROUP 00, How to Cope with Intermittent Malfunction P.00-5).

Main Index
Group TOC

STEP 3. Check the front impact sensor (LH) (M.U.T.-III diagnosis code).

(1) Disconnect the negative battery terminal.
(2) Replace the front impact sensor (LH) with the front impact sensor (RH).
(3) Connect the negative battery terminal.
(4) Erase diagnosis code from memory, and check the diagnosis code.

Q: Is diagnosis code B1408 or B1409 set?

YES : Replace the front impact sensor (LH) with a new one (Refer to P.52B-330). Go to Step 5 .

NO : Go to Step 4 .

STEP 4. Check the harness wires for open circuit or short circuit between SRS-ECU connector C-119 (terminal No.38 and 39) and front impact sensor (LH) connector A-22 (terminal No.1 and 2).

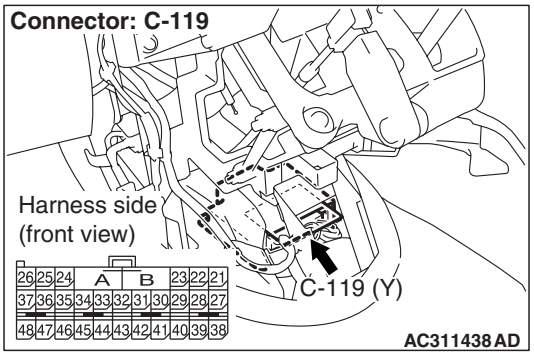

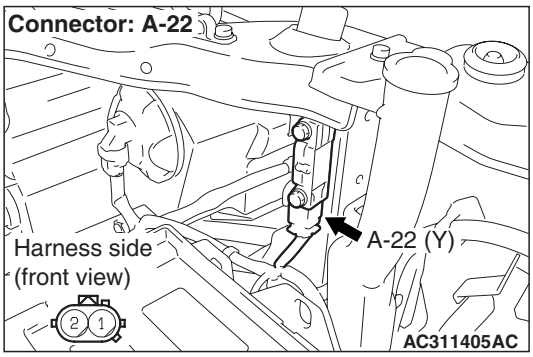

NOTE:

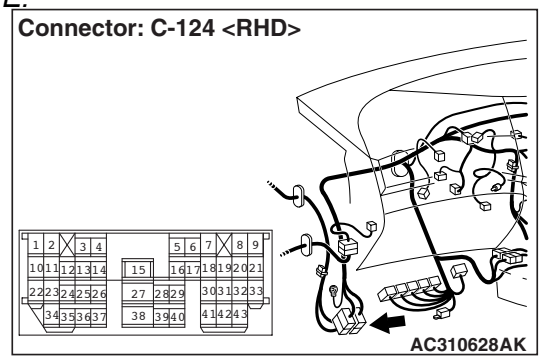

After inspecting intermediate connector C-124 inspect the wiring harness. If the intermediate connector C-124 is damaged, repair or replace it.

Q: Is the check result normal?

YES : Go to Step 5 .

NO : Repair the harness wires between SRS-ECU connector C-119 (terminal No.38 and 39) and front impact sensor (LH) connector A-22 (terminal No.1 and 2).

STEP 5. Check whether the diagnosis code is reset.

Q: Is diagnosis code B1418 or B1419 set?

YES : Replace the SRS-ECU (Refer to P.52B-332).

NO : . An intermittent malfunction is suspected (Refer to GROUP 00, How to Use Troubleshooting/Inspection Service Points P.00-5).

Main Index
Group TOC

Code No.B1420: Side-Airbag Module (RH) (Squib) System Fault 1 (Short Circuit between Terminals of the Squib Circuit)

Side-Airbag Module (RH) (Squib) Circuit

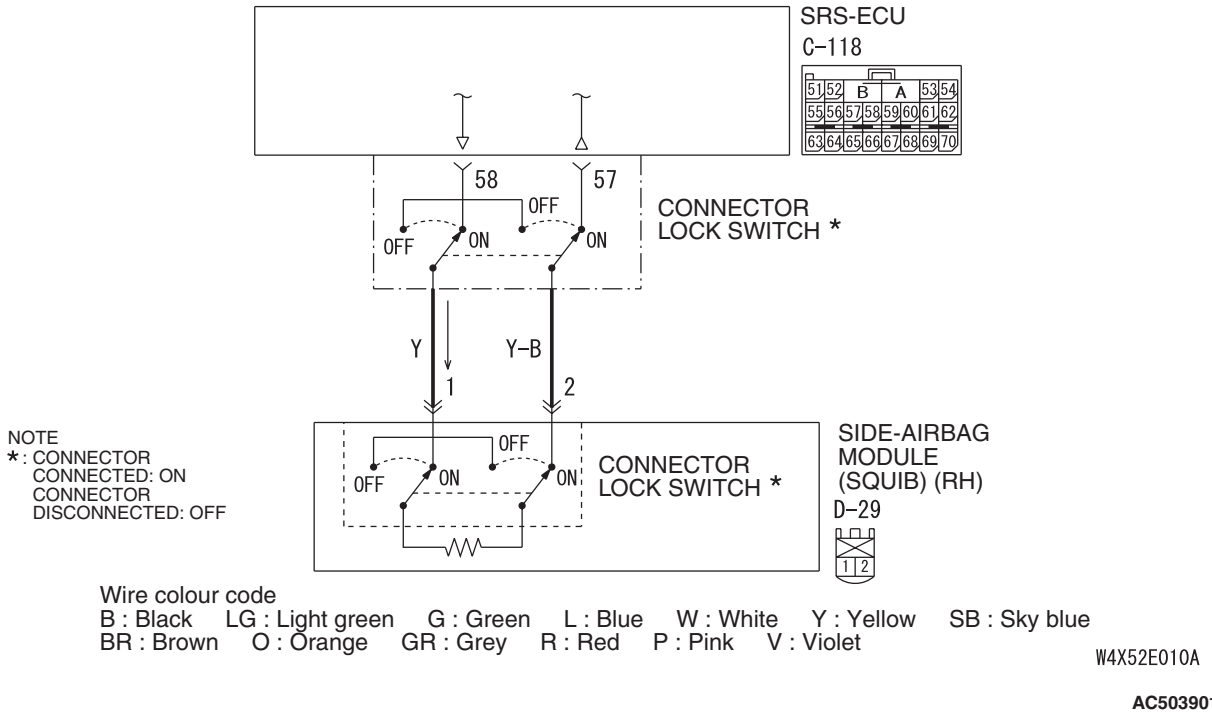

AC503901AB

⚠ CAUTION

If diagnosis code B1420 is set in the SRS-ECU, always diagnose the CAN bus lines.

OPERATION

- The SRS-ECU judges how severe a collision is by detecting signals from the left and right side impact sensors. If the impact is over a predetermined level, the SRS-ECU sends an ignition signal. At this time, if the side-airbag safing G-sensor is on, the SRS side-airbag will inflate.
- The ignition signal is input to the side-airbag module to inflate the side-airbag.

DIAGNOSIS CODE SET CONDITIONS

This diagnosis code is set if there is abnormal resistance between the input terminals of the side-airbag module (RH) (squib).

PROBABLE CAUSES

- Improper engaged connector or defective short spring*
- Short between the side-airbag module (RH) (squib) circuit terminals
- Damaged connector(s)
- Malfunction of the SRS-ECU

*NOTE: *: The squib circuit connectors integrate a "short" spring (which prevents the air bag from deploying unintentionally due to static electricity by shorting the positive wire to the earth wire in the squib circuit when the connectors are disconnected). (Refer to P.52B-3). Therefore, if connector C-118 or D-29 is damaged or improperly engaged, the short spring may not be released when the connector is connected.*

DIAGNOSIS PROCEDURE

STEP 1. M.U.T.-III CAN bus diagnostics

Use the M.U.T.-III to diagnose the CAN bus lines.

Q: Is the check result normal?

YES : Go to Step 2

NO : Repair the CAN bus lines (Refer to GROUP 54F, Diagnosis P.54F-13).

STEP 2. Check whether the diagnosis code is reset.

Check again if the diagnosis code is set.

(1) Erase the diagnosis code.

(2) Ignition: "LOCK" (OFF) position to "ON"

(3) On completion, check that the diagnosis code is not reset.

Q: Is the diagnosis code set?
YES : Go to Step 3 .
NO : There is an intermittent malfunction such as poor engaged connector(s) or open circuit (Refer to GROUP 00, How to Cope with Intermittent Malfunction P.00-5).

STEP 3. M.U.T.-III diagnosis code

⚠ CAUTION

To prevent damage to M.U.T.-III MB991958, always turn the ignition switch to the "LOCK" (OFF) position before connecting or disconnecting M.U.T.-III MB991958.

(1) Turn the ignition switch to the "ON" position.
(2) Check if the diagnosis code is set.
(3) Turn the ignition switch to the "LOOK" (OFF) position.

Q: Is diagnosis code B1519 set?
YES : Go to Step 4.
NO : Go to Step 5.

STEP 4. Connector lock check: SRS-ECU connector C-118 (M.U.T.-III diagnosis code).

(1) Disconnect the negative battery terminal.

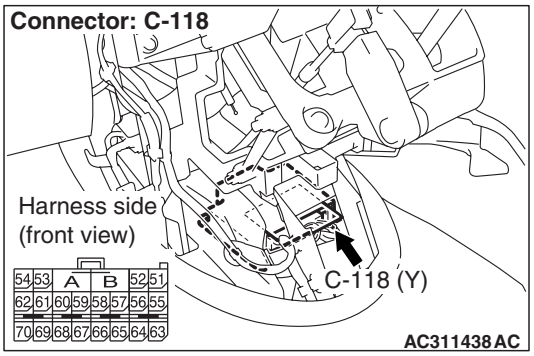

(2) Disconnect connectors C-118 and then reconnect them.
(3) Connect the negative battery terminal.
(4) Erase the diagnosis code memory, and check the diagnosis code.

Q: Is diagnosis code B1420 out put?
YES : Go to Step 5.
NO : The procedure is complete. It is assumed that diagnosis code B1420 set as connector C-118 was engaged improperly.

STEP 5. Connector lock check: SRS-ECU connector C-118 and side-airbag module (RH) connector D-29 (M.U.T.-III diagnosis code).

(1) Disconnect the negative battery terminal.

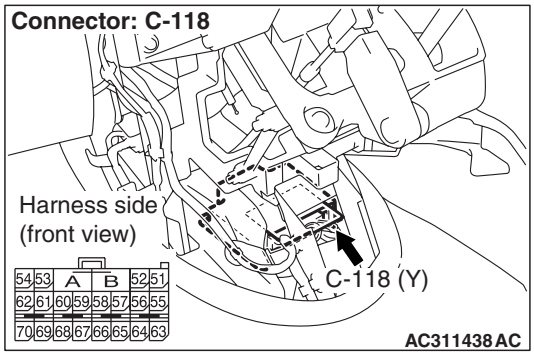

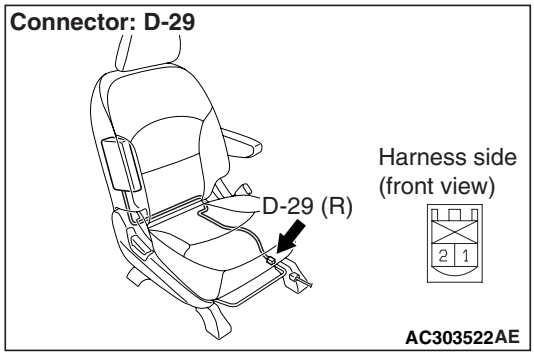

(2) Disconnect connectors C-118 and D-29, and then reconnect them.
(3) Connect the negative battery terminal.
(4) Erase the diagnosis code memory, and check the diagnosis code.

Q: Is diagnosis code B1420 out put?
YES : Go to Step 6.
NO : The procedure is complete. It is assumed that diagnosis code B1420 set because connector C-118 or D-29 was engaged improperly.

STEP 6. Check the side-airbag module (RH) (M.U.T.-III diagnosis code).

(1) Disconnect the negative battery terminal.

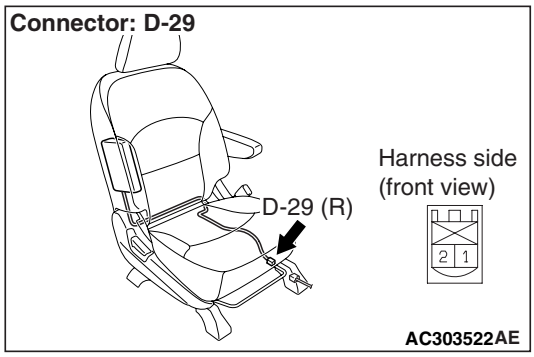

(2) Disconnect the side-airbag module (RH) connector D-29.

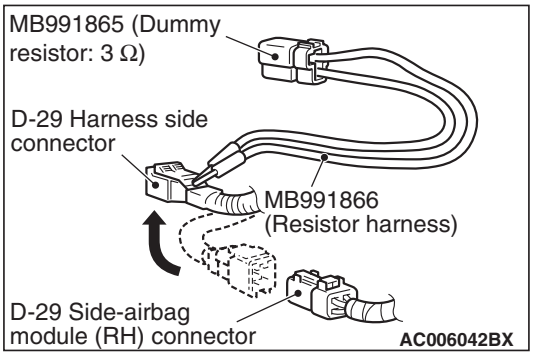

(3) Connect special tool dummy resistor (MB991865) to special tool resistor harness (MB991866).

⚠ CAUTION

Do not insert a test probe into the terminal from its front side directly, as the connector contact pressure may be weakened.

(4) Insert special tool MB991866 into the D-29 harness side connector by backprobing.
(5) Connect the negative battery terminal.
(6) Erase the diagnosis code memory, and check the diagnosis code.

Q: Is diagnosis code B1420 set?

YES : Go to Step 7.

NO : Replace the frame assembly of the front seat (RH) (Refer to GROUP 52A, Front Seat P.52A-23).

STEP 7. Check the side-airbag module (RH) circuit. Resistance measurement at the SRS-ECU connector C-118.

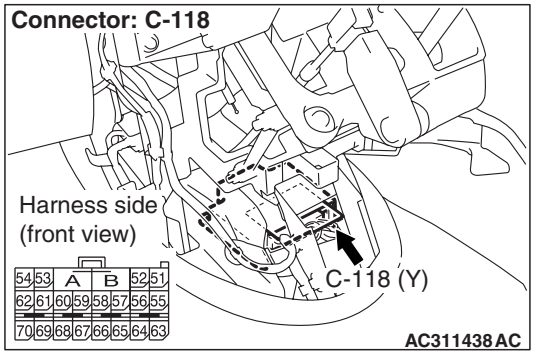

(1) Disconnect SRS-ECU connector C-118.

⚠ DANGER

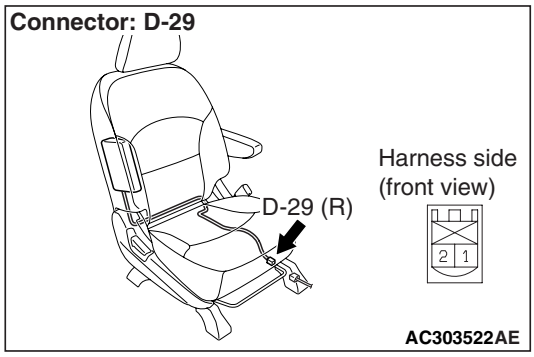

To prevent the air bag from deploying unintentionally, disconnect the side-airbag module (RH) connector D-29 to short the squib circuit.

(2) Disconnect side-airbag module connector D-29.

⚠ CAUTION

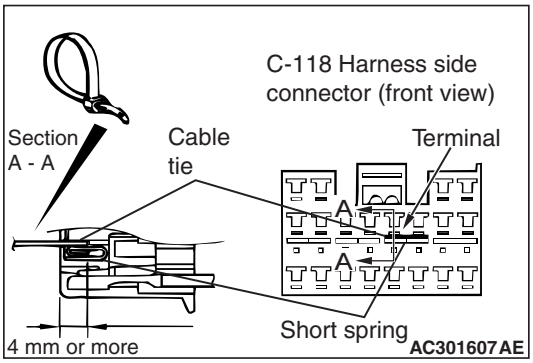

Insert an insulator such as a cable tie to a depth of 4mm or more, otherwise the short spring will not be released.

(3) Insert a cable tie [3 mm wide, 0.5 mm thick] between terminals 57, 58 and the short spring to release the short spring.

Main Index
Group TOC

(4) Measure at the wiring harness side.

⚠ CAUTION

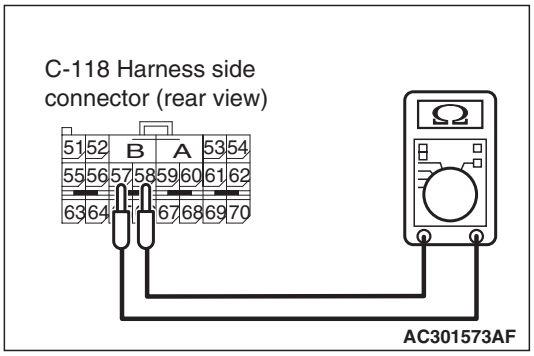

Do not insert a test probe into the terminal from its front side directly, as the connector contact pressure may be weakened.

(5) Check for continuity between C-118 harness side connector terminals 57 and 58.

OK: Open circuit

Q: Is the check result normal?

YES : Go to Step 8.

NO : Repair the harness wires between SRS-ECU connector C-118 (terminal No.57 and 58) and side-airbag module (RH) connector D-29 (terminal No.1 and 2).

STEP 8. Check whether the diagnosis code is reset.

Q: Is diagnosis code B1420 set?

YES : Replace the SRS-ECU (Refer to P.52B-332).

NO : An intermittent malfunction is suspected (Refer to GROUP 00, How to Use Troubleshooting/Inspection Service Points P.00-5).

Code No.B1421: Side-Airbag Module (RH) (Squib) System Fault 2 (Open in the Squib Circuit)

Side-Airbag Module (RH) (Squib) Circuit

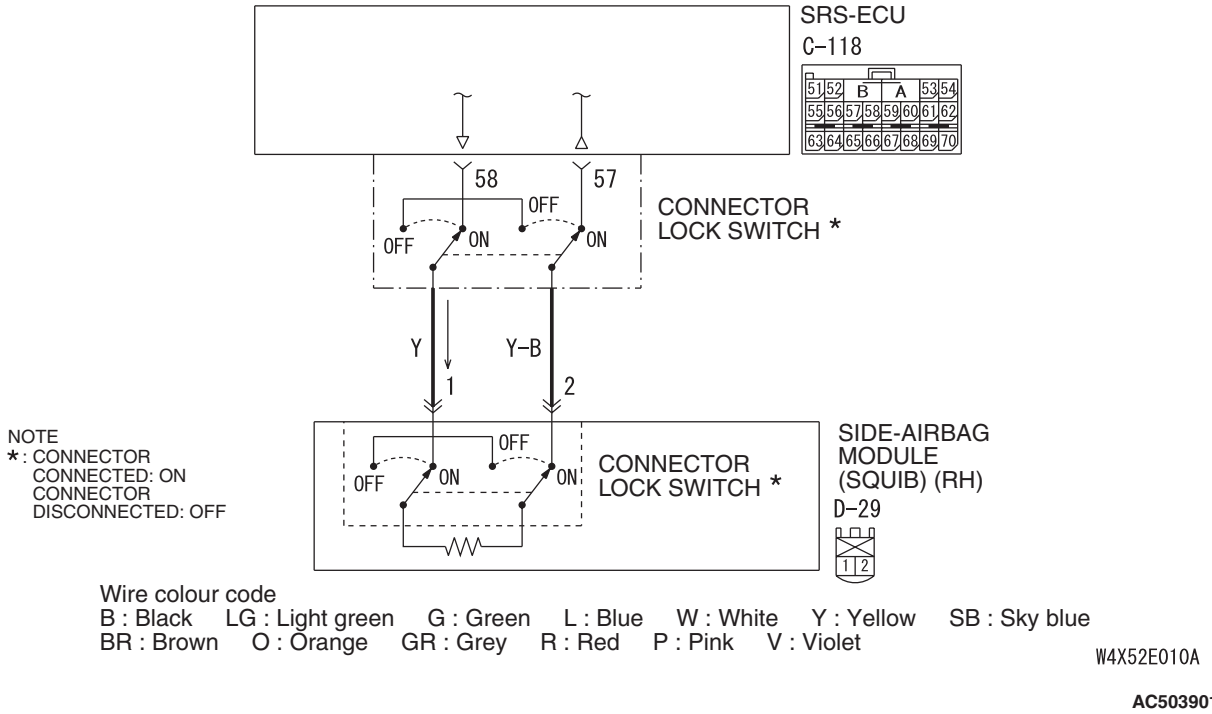

⚠ CAUTION

If diagnosis code B1421 is set in the SRS-ECU, always diagnose the CAN bus lines.

OPERATION

- The SRS-ECU judges how severe a collision is by detecting signals from the left and right side impact sensors. If the impact is over a predetermined level, the SRS-ECU sends an ignition signal. At this time, if the side-airbag safing G-sensor is on, the SRS side-airbag will inflate.
- The ignition signal is input to the side-airbag module to inflate the side-airbag.

DIAGNOSIS CODE SET CONDITIONS

This diagnosis code is set if there is abnormal resistance between the input terminals of the side-airbag module (RH) (squib).

PROBABLE CAUSES

- Open circuit in the side-airbag module (RH) (squib) circuit
- Improper connector contact
- Malfunction of the SRS-ECU

DIAGNOSIS PROCEDURE

STEP 1. M.U.T.-III CAN bus diagnostics

Use the M.U.T.-III to diagnose the CAN bus lines.

Q: Is the check result normal?

YES : Go to Step 2

NO : Repair the CAN bus lines (Refer to GROUP 54F, Diagnosis P.54F-13).

STEP 2. Check whether the diagnosis code is reset.

Check again if the diagnosis code is set.

(1) Erase the diagnosis code.
(2) Ignition: "LOCK" (OFF) position to "ON"
(3) On completion, check that the diagnosis code is not reset.

Q: Is the diagnosis code set?

YES : Go to Step 3 .

NO : There is an intermittent malfunction such as poor engaged connector(s) or open circuit (Refer to GROUP 00, How to Cope with Intermittent Malfunction P.00-5).

STEP 3. Check the side-airbag module (RH) (M.U.T.-III diagnosis code).

(1) Disconnect the negative battery terminal.

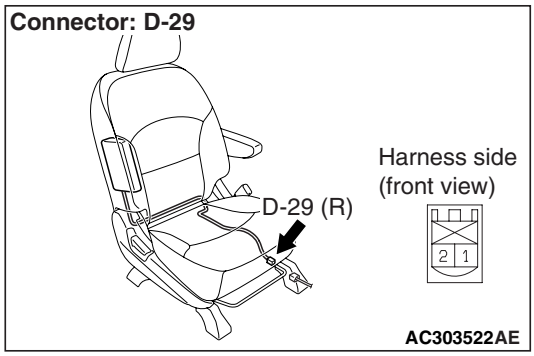

(2) Disconnect the side-airbag module (RH) connector D-29.

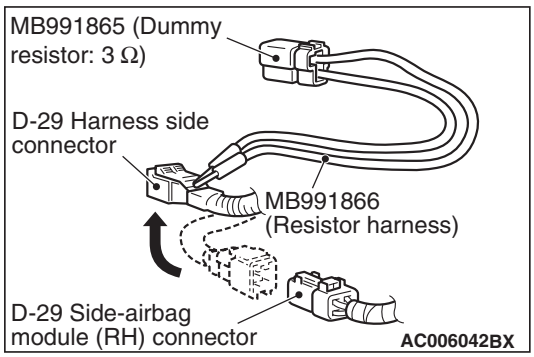

(3) Connect special tool dummy resistor (MB991865) to special tool resistor harness (MB991866).

⚠ CAUTION

Do not insert a test probe into the terminal from its front side directly, as the connector contact pressure may be weakened.

(4) Insert special tool MB991866 into the D-29 harness side connector by backprobing.
(5) Connect the negative battery terminal.
(6) Erase the diagnosis code memory, and check the diagnosis code.

Q: Is diagnosis code B1421 set?

YES : Go to Step 4.

NO : Replace the frame assembly of the front seat (RH) (Refer to GROUP 52A, Front Seat P.52A-23).

STEP 4. Resistance measurement between SRS-ECU connector C-118 (terminal No.57 and 58) and the side-airbag module (RH) connector D-29 (terminal No.1 and 2).

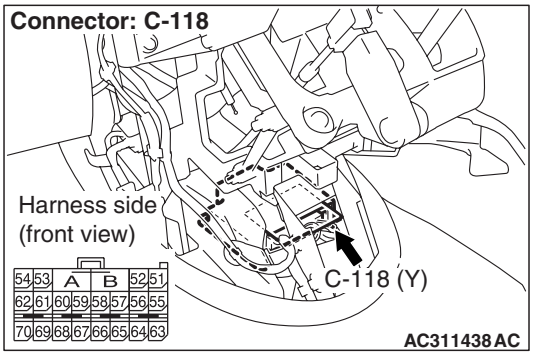

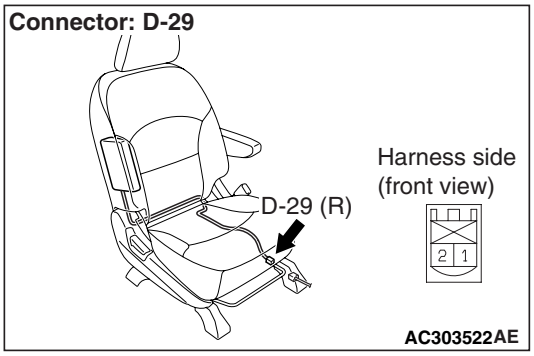

(1) Disconnect SRS-ECU connector C-118 and side-airbag module (RH) connector D-29.

⚠ CAUTION

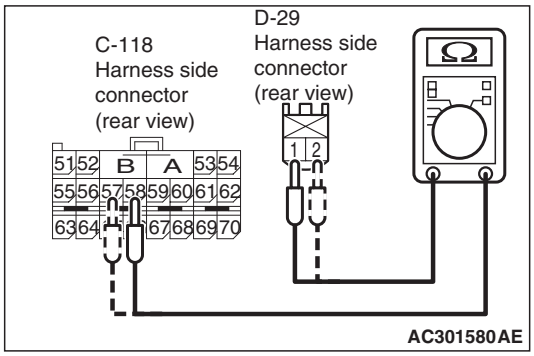

Do not insert a test probe into the terminal from its front side directly, as the connector contact pressure may be weakened.

(2) Check for continuity between the following terminals.
- SRS-ECU connector C-118 (terminal No.57) and the side-airbag module (RH) connector D-29 (terminal No.2)
- SRS-ECU connector C-118 (terminal No.58) and the side-airbag module (RH) connector D-29 (terminal No.1)

OK: Less than 2 Ω

Q: Are the check results normal?

YES : Go to Step 5.

NO : Repair the harness wires between SRS-ECU connector C-118 (terminal No.57 and 58) and side-airbag module (RH) connector D-29 (terminal No.1 and 2).

STEP 5. Check whether the diagnosis code is reset.

Q: Is diagnosis code B1421 set?

YES : Replace the SRS-ECU (Refer to P.52B-332).

NO : An intermittent malfunction is suspected (Refer to GROUP 00, How to Use Troubleshooting/Inspection Service Points P.00-5).

Main Index
Group TOC

Code No.B1422: Side-Airbag Module (RH) (Squib) System Fault Earth Circuit (Short-Circuited to Earth)

Side-Airbag Module (RH) (Squib) Circuit

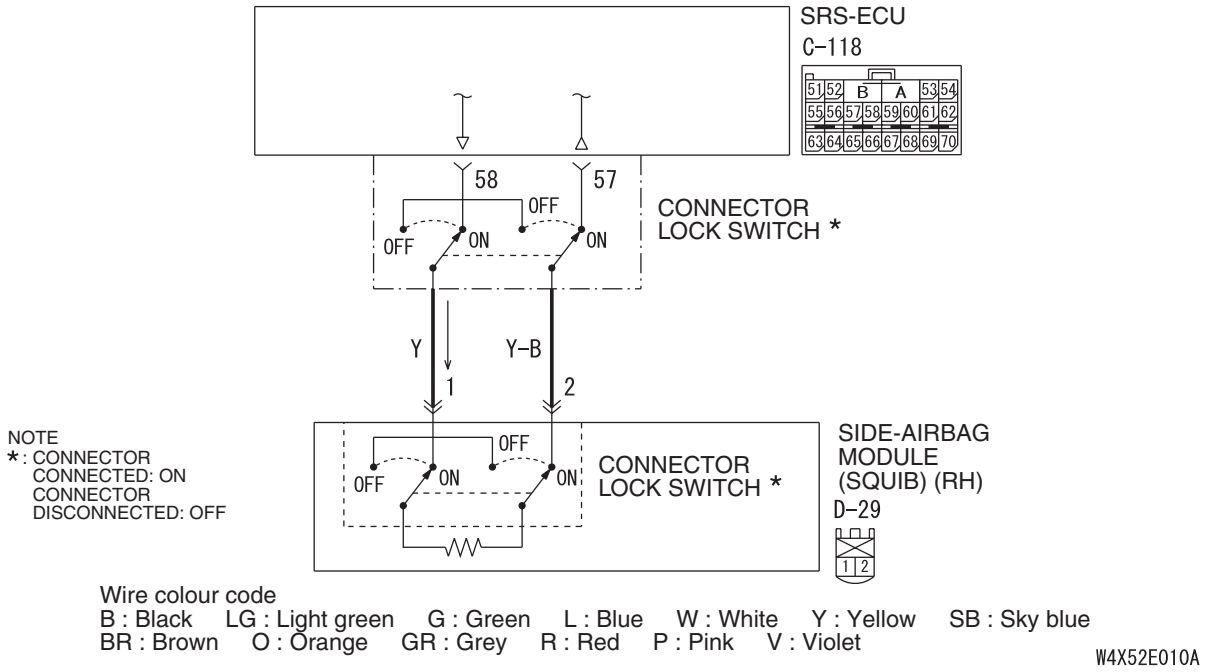

AC503901AB

⚠ CAUTION

If diagnosis code B1422 is set in the SRS-ECU always diagnose the CAN bus lines.

OPERATION

- The SRS-ECU judges how severe a collision is by detecting signals from the left and right side impact sensors. If the impact is over a predetermined level, the SRS-ECU sends an ignition signal. At this time, if the side-airbag safing G-sensor is on, the SRS side-airbag will inflate.
- The ignition signal is input to the side-airbag module to inflate the side-airbag.

DIAGNOSIS CODE SET CONDITIONS

This diagnosis code is set if there is abnormal resistance between the input terminals of the side-airbag module (RH) (squib).

PROBABLE CAUSES

- Damaged wiring harnesses or connectors
- Short to earth in the side-airbag module (RH) (squib) harness
- Malfunction of the SRS-ECU

DIAGNOSIS PROCEDURE

STEP 1. M.U.T.-III CAN bus diagnostics

Use the M.U.T.-III to diagnose the CAN bus lines.

Q: Is the check result normal?

YES : Go to Step 2.

NO : Repair the CAN bus lines (Refer to GROUP 54F, Diagnosis P.54F-13).

STEP 2. Check whether the diagnosis code is reset.

Check again if the diagnosis code is set.

(1) Erase the diagnosis code.

(2) Ignition: "LOCK" (OFF) position to "ON"

(3) On completion, check that the diagnosis code is not reset.

Q: Is the diagnosis code set?

YES : Go to Step 3 .

NO : There is an intermittent malfunction such as poor engaged connector(s) or open circuit (Refer to GROUP 00, How to Cope with Intermittent Malfunction P.00-5).

Main Index
Group TOC

STEP 3. Check the side-airbag module (RH) (M.U.T.-III diagnosis code).

(1) Disconnect the negative battery terminal.

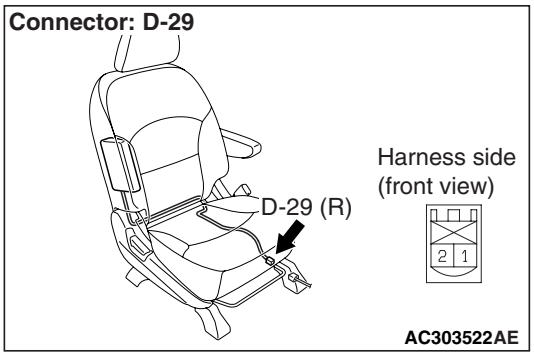

(2) Disconnect the side-airbag module (RH) connector D-29.

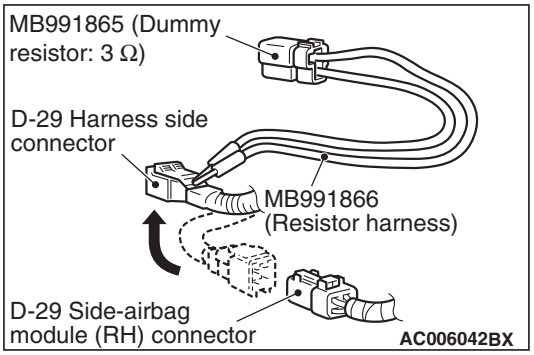

(3) Connect special tool dummy resistor (MB991865) to special tool resistor harness (MB991866).

⚠ CAUTION

Do not insert a test probe into the terminal from its front side directly, as the connector contact pressure may be weakened.

(4) Insert special tool MB991866 into the D-29 harness side connector by backprobing.
(5) Connect the negative battery terminal.
(6) Erase the diagnosis code memory, and check the diagnosis code.

Q: Is diagnosis code B1422 set?

YES : Go to Step 4.

NO : Replace the frame assembly of the front seat (RH) (Refer to GROUP 52A, Front Seat P.52A-23).

STEP 4. Check the side-airbag module (RH) circuit. Resistance measurement at the SRS-ECU connector C-118.

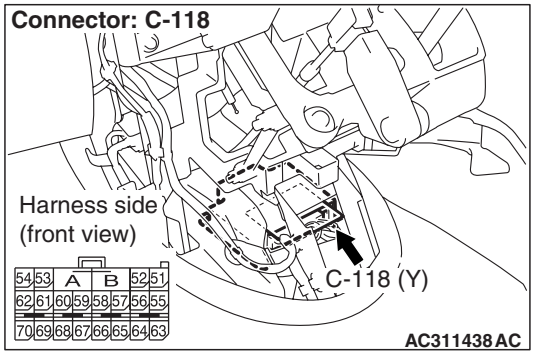

(1) Disconnect SRS-ECU connector C-118.

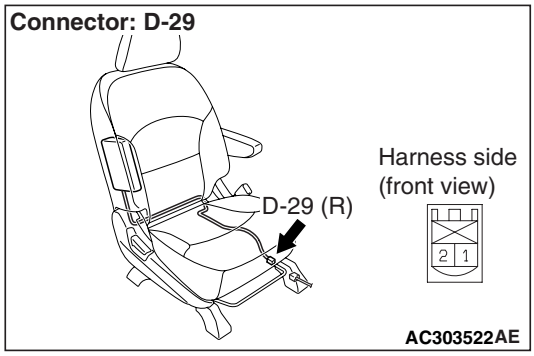

(2) Disconnect side-airbag module (RH) connector D-29.

⚠ CAUTION

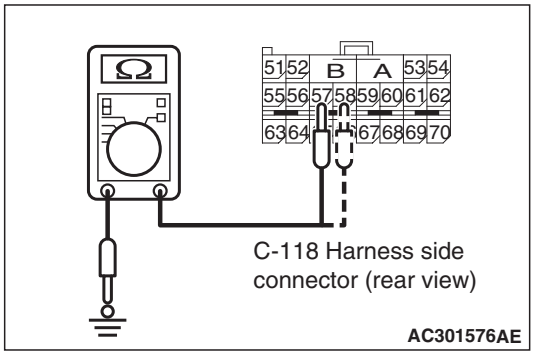

Do not insert a test probe into the terminal from its front side directly, as the connector contact pressure may be weakened.

(3) Check for continuity between C-118 harness side connector terminals 57, 58 and body earth.

OK: Open circuit

Q: Is the check result normal?

YES : Go to Step 5.

NO : Repair the harness wires between SRS-ECU connector C-118 (terminal No.57 and 58) and side-airbag module (RH) connector D-29 (terminal No.1 and 2).

Main Index
Group TOC

STEP 5. Check whether the diagnosis code is reset.

Q: Is diagnosis code B1422 set?

YES : Replace the SRS-ECU (Refer to P.52B-332).

NO : . An intermittent malfunction is suspected (Refer to GROUP 00, How to Use Troubleshooting/Inspection Service Points P.00-5).

Code No.B1423: Side-Airbag Module (RH) (Squib) System Fault Power Supply Circuit (Short-Circuited to Power Supply)

Side-Airbag Module (RH) (Squib) Circuit

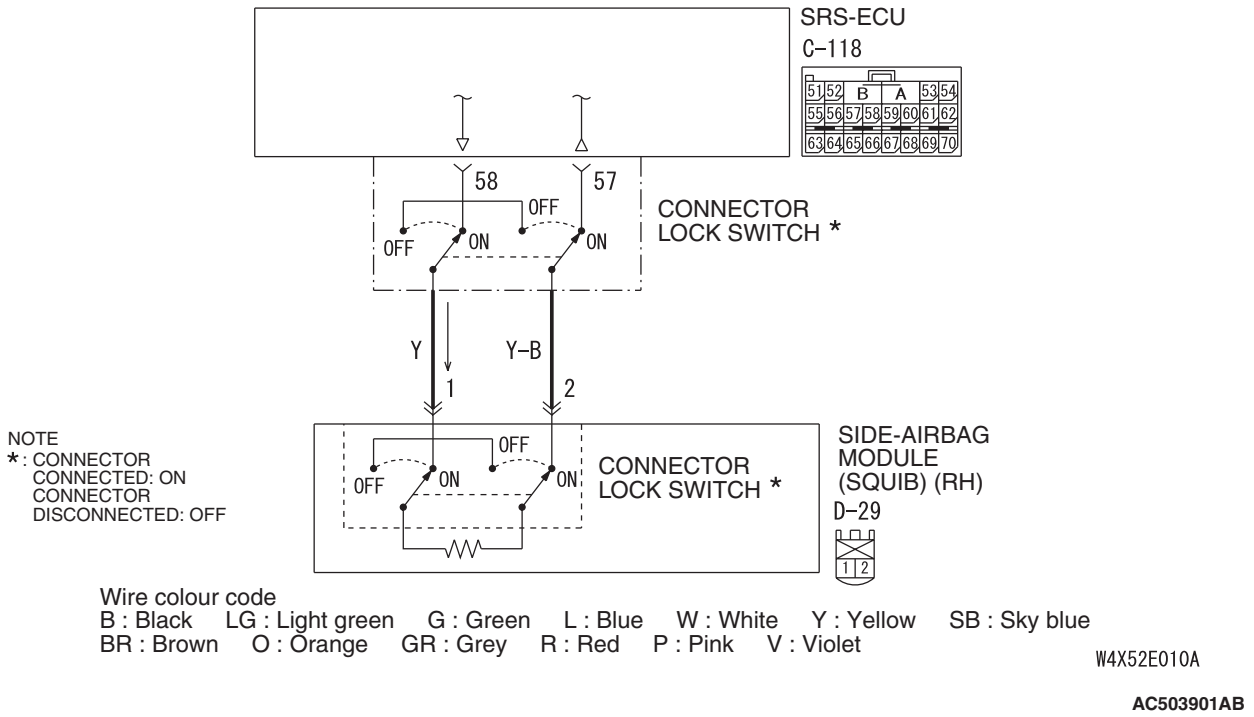

⚠ CAUTION

If diagnosis code B1423 is set in the SRS-ECU, always diagnose the CAN bus lines.

OPERATION

- The SRS-ECU judges how severe a collision is by detecting signals from the left and right side impact sensors. If the impact is over a predetermined level, the SRS-ECU sends an ignition signal. At this time, if the side-airbag safing G-sensor is on, the SRS side-airbag will inflate.
- The ignition signal is input to the side-airbag module to inflate the side-airbag.

DIAGNOSIS CODE SET CONDITIONS

This diagnosis code is set if there is abnormal resistance between the input terminals of the side-airbag module (RH) (squib).

PROBABLE CAUSES

- Damaged wiring harnesses or connectors
- Short to the power supply in the side-airbag module (RH) (squib) harness
- Malfunction of the SRS-ECU

Main Index
Group TOC

DIAGNOSIS PROCEDURE

STEP 1. M.U.T.-III CAN bus diagnostics

Use the M.U.T.-III to diagnose the CAN bus lines.

Q: Is the check result normal?

YES : Go to Step 2

NO : Repair the CAN bus lines (Refer to GROUP 54F, Diagnosis P.54F-13).

STEP 2. Recheck for diagnosis code.

Check again if the diagnosis code is set.

(1) Erase the diagnosis code.

(2) Ignition: "LOCK" (OFF) position to "ON"

(3) On completion, check that the diagnosis code is not reset.

Q: Is the diagnosis code set?

YES : Go to Step 3 .

NO : There is an intermittent malfunction such as poor engaged connector(s) or open circuit (Refer to GROUP 00, How to Cope with Intermittent Malfunction P.00-5).

STEP 3. Check the side-airbag module (RH) (M.U.T.-III diagnosis code).

(1) Disconnect the negative battery terminal.

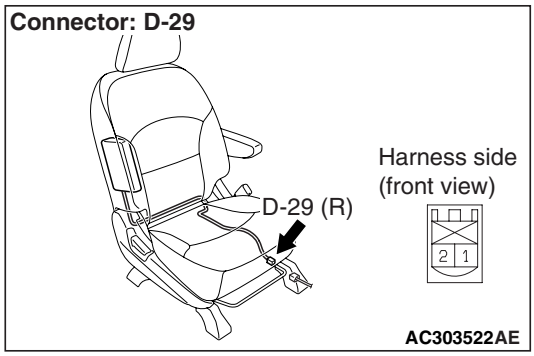

(2) Disconnect the side-airbag module (RH) connector D-29.

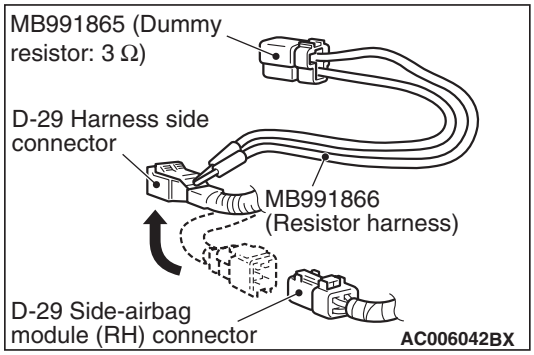

(3) Connect special tool dummy resistor (MB991865) to special tool resistor harness (MB991866).

⚠ CAUTION

Do not insert a test probe into the terminal from its front side directly, as the connector contact pressure may be weakened.

(4) Insert special tool MB991866 into the D-29 harness side connector by backprobing.

(5) Connect the negative battery terminal.

(6) Erase the diagnosis code memory, and check the diagnosis code.

Q: Is diagnosis code B1423 set?

YES : Go to Step 4.

NO : Replace the frame assembly of the front seat (RH) (Refer to GROUP 52A, Front Seat P.52A-23).

STEP 4. Check the side-airbag module (RH) circuit. Voltage measurement at the SRS-ECU connector C-118.

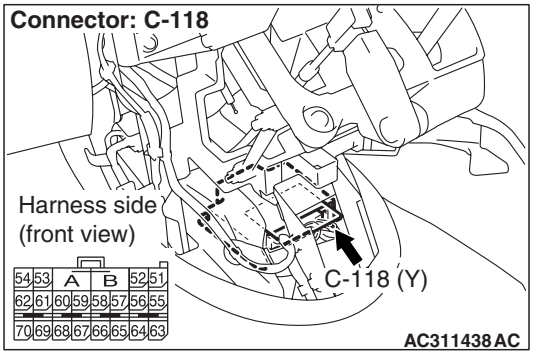

(1) Disconnect SRS-ECU connector C-118.

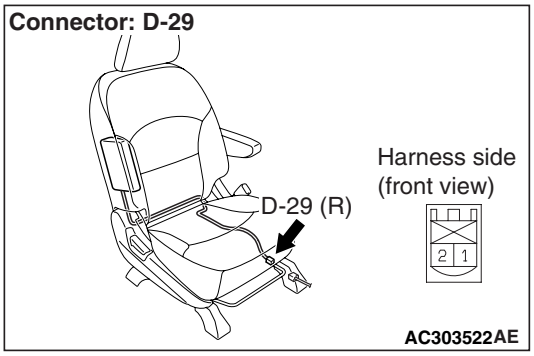

(2) Disconnect side-airbag module (RH) connector D-29.

(3) Turn the ignition switch to the "ON" position.

⚠ CAUTION

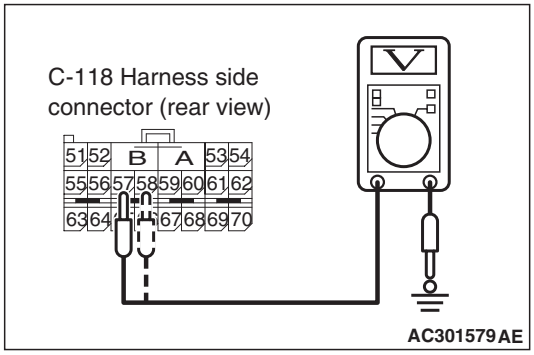

Do not insert a test probe into the terminal from its front side directly, as the connector contact pressure may be weakened.

(4) Measure the voltage between C-118 harness side connector terminals 57 and 58 and body earth.

OK: 0 V

Q: Is the check result normal?

YES : Go to Step 5.

NO : Repair the harness wires between SRS-ECU connector C-118 (terminal No.57 and 58) and side-airbag module (RH) connector D-29 (terminal No.1 and 2).

STEP 5. Check whether the diagnosis code is reset.

Q: Is diagnosis code B1423 set?

YES : Return to Step 1.

NO : The procedure is complete.

Main Index
Group TOC

Code No.B1426: Side Impact Sensor (Front) (RH) System for Fault 1
Code No.B1436: Side Impact Sensor (Front) (LH) System for Fault 1

⚠ CAUTION
If diagnosis code B1426 or B1436 is set in the SRS-ECU, always diagnose the CAN main bus line.

DIAGNOSIS CODE SET CONDITIONS

These diagnosis codes are set if the following conditions are detected from the analogue G-sensor inside the side impact sensor output:

- Analogue G-sensor is not operating.
- Analogue G-sensor characteristics are abnormal.
- Analogue G-sensor output is abnormal.

PROBABLE CAUSES

Malfunction of side impact sensor (front) (RH) (for diagnosis code B1426) and side impact sensor (front) (LH) (for diagnosis code B1436)

DIAGNOSIS PROCEDURE

STEP 1. M.U.T.-III CAN bus diagnostics
Use the M.U.T.-III to diagnose the CAN bus lines.

Q: Is the check result normal?
YES : Go to Step 2 .
NO : Repair the CAN bus line (Refer to GROUP 54F, Diagnosis P.54F-13).

STEP 2. Check whether the diagnosis code is reset.
Check again if the diagnosis code is set.
(1) Erase the diagnosis code.
(2) Ignition: "LOCK" (OFF) position to "ON"
(3) On completion, check that the diagnosis code is not reset.

Q: Is the diagnosis code set?
YES : Go to Step 3 .
NO : There is an intermittent malfunction such as poor engaged connector(s) or open circuit (Refer to GROUP 00, How to Cope with Intermittent Malfunction P.00-5).

STEP 3. Check the side impact sensor. (M.U.T.-III diagnosis code.)
Replace side impact sensor (front) (RH) (for diagnosis code B1426) and side impact sensor (front) (LH) (for diagnosis code B1436) (Refer to P.52B-347).
Check the diagnosis code.

Q: Is either diagnosis code B1426 or B1436 set?
YES : Replace the SRS-ECU (Refer to P.52B-332).
NO : The procedure is complete.

Main Index
Group TOC

Code No.B1427: Side Impact Sensor (Front) (RH) Power Supply Circuit System

Side Impact Sensor (Front) (RH) Circuit

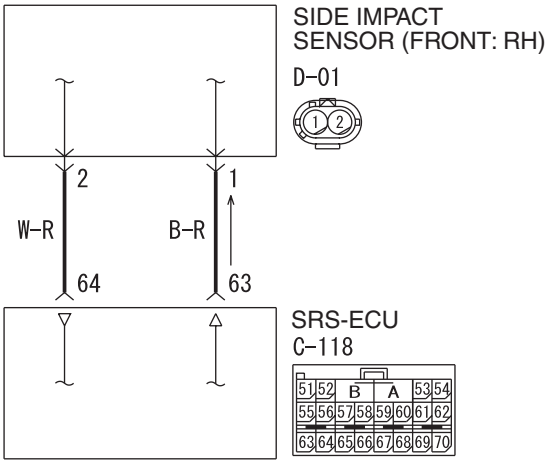

Wire colour code
B : Black LG : Light green G : Green L : Blue W : White Y : Yellow SB : Sky blue
BR : Brown O : Orange GR : Gray R : Red P : Pink V : Violet

W4X52X012A

⚠ CAUTION

If diagnosis code B1427 is set in the SRS-ECU, always diagnose the CAN main bus line.

OPERATION

The side impact sensor includes an analogue G-sensor and CPU, etc. The CPU monitors the analogue G-sensor output signal. If the CPU judges that the side-airbags and curtain air bags should be deployed, it sends a fire signal to the SRS-ECU to deploy the side-airbags and curtain air bags. In addition, the CPU diagnoses the internal components of the side impact sensor. If a malfunction occurs, it requests the SRS-ECU to set a diagnosis code.

DIAGNOSIS CODE SET CONDITIONS

This diagnosis code will set when the power supply voltage to the side impact sensor (front) (RH) remains less than a predetermined value for 5 seconds. However, if the system returns to normal condition, code number B1427 will be erased automatically and the SRS warning lamp will go out.

PROBABLE CAUSES

- Damaged wiring harness or connectors
- Malfunction of the side impact sensor (front) (RH)
- Malfunction of the SRS-ECU

DIAGNOSIS PROCEDURE

STEP 1. M.U.T.-III CAN bus diagnostics

Use the M.U.T.-III to diagnose the CAN bus lines.

Q: Is the check result normal?

YES : Go to Step 2.

NO : Repair the CAN bus line (Refer to GROUP 54F, Diagnosis P.54F-13).

STEP 2. Check whether the diagnosis code is reset.

Check again if the diagnosis code is set.

(1) Erase the diagnosis code.
(2) Ignition: "LOCK" (OFF) position to "ON"
(3) On completion, check that the diagnosis code is not reset.

Q: Is the diagnosis code set?

YES : Go to Step 3.

NO : There is an intermittent malfunction such as poor engaged connector(s) or open circuit (Refer to GROUP 00, How to Cope with Intermittent Malfunction P.00-5).

Main Index
Group TOC

STEP 3. Check the harness wires for open circuit or short circuit between SRS-ECU connector C-118 (terminal No.63 and 64) and side impact sensor (front) (RH) connector D-01 (terminal No.1 and 2).

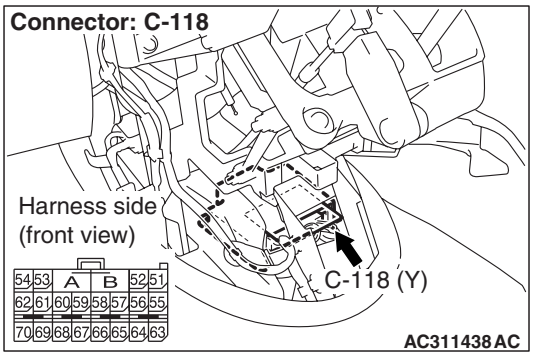

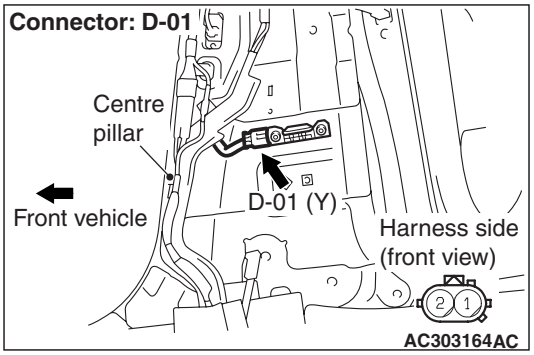

Q: Are the harness wires between SRS-ECU connector C-118 (terminal No.63 and 64) and side impact sensor (front) (RH) connector D-01 (terminal No.1 and 2) in good condition?

YES : Go to Step 4.

NO : . Replace the harness wires between SRS-ECU connector C-118 (terminal No.63 and 64) and side impact sensor (front) (RH) connector D-01 (terminal No.1 and 2).

STEP 4. Check the side impact sensor (front) (RH) (M.U.T.-III diagnosis code).

(1) Disconnect the negative battery terminal.
(2) Replace the side impact sensor (front) (RH) with the side impact sensor (front) (LH).
(3) Connect the negative battery terminal.
(4) Erase diagnosis code from memory, and check the diagnosis code.

Q: Is diagnosis code B1427 set?

YES : Replace the SRS-ECU (Refer to P.52B-332).

NO : Replace the side impact sensor (front) (RH) with a new one (Refer to P.52B-347). Go to Step 5.

STEP 5. Check whether the diagnosis code is reset.

Q: Is diagnosis code B1427 set?

YES : Replace the SRS-ECU (Refer to P.52B-332).

NO : An intermittent malfunction is suspected (Refer to GROUP 00, How to Use Troubleshooting/Inspection Service Points P.00-5).

Main Index
Group TOC

Code No.B1428: Side Impact Sensor (Front) (RH) (Squib) for Power Supply Circuit
Code No.B1429: Side Impact Sensor (Front) (RH) (Squib) for Communication System

Side Impact Sensor (Front) (RH) Circuit

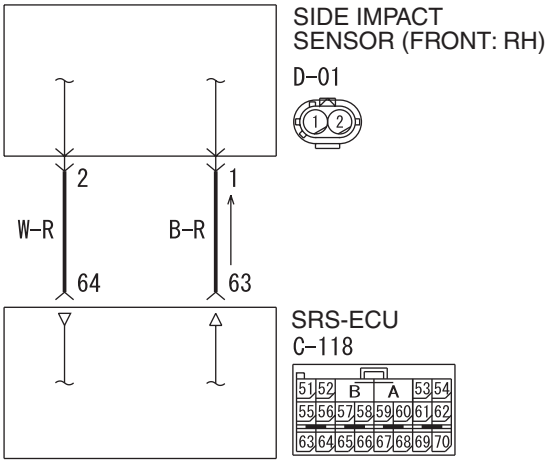

Wire colour code
B : Black LG : Light green G : Green L : Blue W : White Y : Yellow SB : Sky blue
BR : Brown O : Orange GR : Gray R : Red P : Pink V : Violet

W4X52X012A

⚠ CAUTION

If diagnosis code B1428 or B1429 is set in the SRS-ECU, always diagnose the CAN main bus line.

OPERATION

The side impact sensor includes an analogue G-sensor and CPU, etc. The CPU monitors the analogue G-sensor output signal. If the CPU judges that the side-airbags and curtain air bags should be deployed, it sends a fire signal to the SRS-ECU to deploy the side-airbags and curtain air bags. In addition, the CPU diagnoses the internal components of the side impact sensor. If a malfunction occurs, it requests the SRS-ECU to set a diagnostic trouble code.

DIAGNOSIS CODE SET CONDITIONS

These diagnosis codes are set if communication between the side impact sensor (front) (RH) and the SRS-ECU is not possible or communication is faulty.

PROBABLE CAUSES

- Damaged wiring harnesses or connectors
- Malfunction of the side impact sensor (front) (RH)
- Malfunction of the SRS-ECU

DIAGNOSIS PROCEDURE

STEP 1. M.U.T.-III CAN bus diagnostics

Use the M.U.T.-III to diagnose the CAN bus lines.

Q: Is the check result normal?

YES : Go to Step 2 .

NO : Repair the CAN bus line (Refer to GROUP 54F, Diagnosis P.54F-13).

STEP 2. Check whether the diagnosis code is reset.

Check again if the diagnosis code is set.

(1) Erase the diagnosis code.
(2) Ignition: "LOCK" (OFF) position to "ON"
(3) On completion, check that the diagnosis code is not reset.

Q: Is the diagnosis code set?

YES : Go to Step 3 .

NO : There is an intermittent malfunction such as poor engaged connector(s) or open circuit (Refer to GROUP 00, How to Cope with Intermittent Malfunction P.00-5).

Main Index
Group TOC

STEP 3.Check the side impact sensor (RH) (M.U.T.-III diagnosis code).

(1) Disconnect the negative battery terminal.
(2) Replace the side impact sensor (front) (RH) with the side impact sensor (LH).
(3) Connect the negative battery terminal.
(4) Erase diagnostic trouble code memory, and check the diagnostic trouble code.

Q: Is DTC B1438 or B1439 set?

YES : Replace the side impact sensor (front) (RH) with a new one (Refer to P.52B-347). Then go to Step 5 .

NO : Go to Step 4 .

STEP 4. Check the harness wires for open circuit or short circuit between SRS-ECU connector C-118 (terminal No.63 and 64) and side impact sensor (front) (RH) connector D-01 (terminal No.1 and 2).

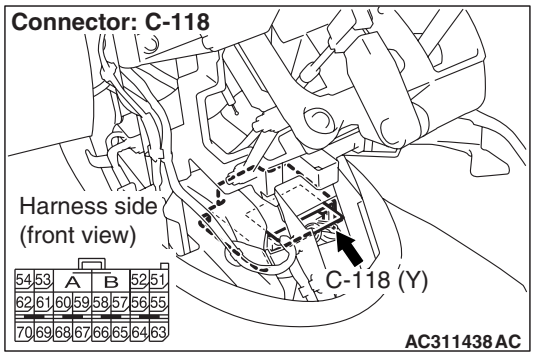

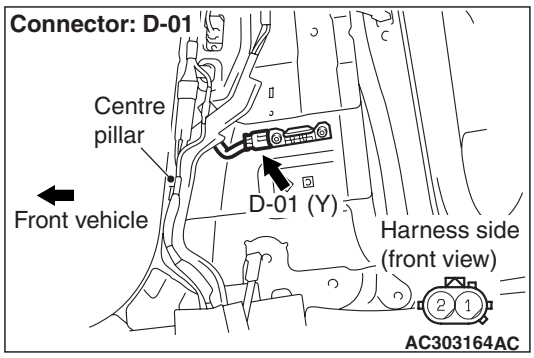

Q: Is the check result normal?

YES : Go to Step 5 .

NO : Repair the harness wires between SRS-ECU connector C-118 (terminal No.63 and 64) and side impact sensor (front) (RH) connector D-01 (terminal No.1 and 2).

STEP 5. Check whether the diagnosis code is reset.

Q: Is diagnosis code B1428 or B1429 set?

YES : Replace the SRS-ECU (Refer to P.52B-332).

NO : An intermittent malfunction is suspected (Refer to GROUP 00, How to Use Troubleshooting/Inspection Service Points P.00-5).

Main Index
Group TOC

Code No.B1430: Side-Airbag Module (LH) (Squib) System Fault 1 (Short Circuit between Terminals of the Squib Circuit)

Side-Airbag Module (Squib) (LH) Circuit

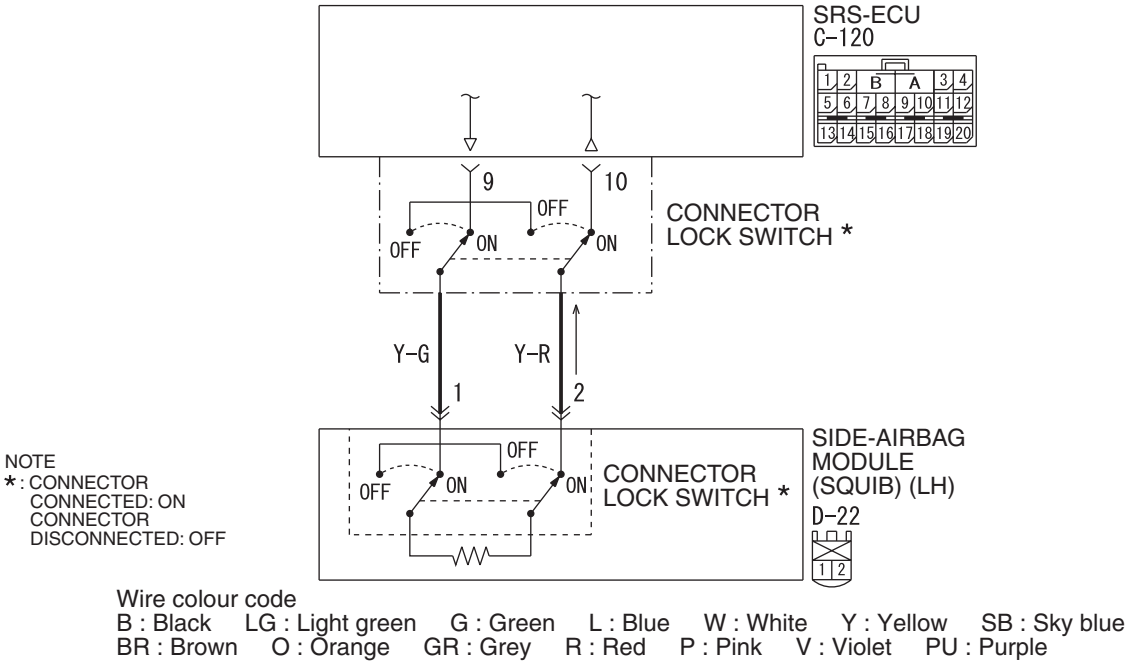

W6X52X003A

⚠ CAUTION

If diagnosis code B1430 is set in the SRS-ECU, always diagnose the CAN bus lines.

OPERATION

- The SRS-ECU judges how severe a collision is by detecting signals from the left and right side impact sensors. If the impact is over a predetermined level, the SRS-ECU sends an ignition signal. At this time, if the side-airbag safing G-sensor is on, the SRS side-airbag will inflate.
- The ignition signal is input to the side-airbag module to inflate the side-airbag.

DIAGNOSIS CODE SET CONDITIONS

This diagnosis code is set if there is abnormal resistance between the input terminals of the side-airbag module (LH) (squib).

PROBABLE CAUSES

- Improper engaged connector or defective short spring*
- Short circuit between the side-airbag module (LH) (squib) circuit terminals
- Damaged connector(s)
- Malfunction of the SRS-ECU

*NOTE: *: The squib circuit connectors integrate a "short" spring (which prevents the air bag from deploying unintentionally due to static electricity by shorting the positive wire to the earth wire in the squib circuit when the connectors are disconnected). (Refer to P.52B-3). Therefore, if connector C-120 or D-22 is damaged or improperly engaged, the short spring may not be released when the connector is connected.*

DIAGNOSIS PROCEDURE

STEP 1. M.U.T.-III CAN bus diagnostics

Use the M.U.T.-III to diagnose the CAN bus lines.

Q: Is the check result normal?

YES : Go to Step 2

NO : Repair the CAN bus lines (Refer to GROUP 54F, Diagnosis P.54F-13).

Main Index
Group TOC

STEP 2. Check whether the diagnosis code is reset.

Check again if the diagnosis code is set.
(1) Erase the diagnosis code.
(2) Ignition: "LOCK" (OFF) position to "ON"
(3) On completion, check that the diagnosis code is not reset.

Q: Is the diagnosis code set?
YES : Go to Step 3.
NO : There is an intermittent malfunction such as poor engaged connector(s) or open circuit (Refer to GROUP 00, How to Cope with Intermittent Malfunction P.00-5).

STEP 3. M.U.T.-III diagnosis code

⚠ CAUTION
To prevent damage to M.U.T.-III MB991958, always turn the ignition switch to the "LOCK" (OFF) position before connecting or disconnecting M.U.T.-III MB991958.

(1) Turn the ignition switch to the "ON" position.
(2) Check if the diagnosis code is set.
(3) Turn the ignition switch to the "LOOK" (OFF) position.

Q: Is diagnosis code B1519 set?
YES : Go to Step 4.
NO : Go to Step 5.

STEP 4. Connector lock check: SRS-ECU connector C-140 (M.U.T.-III diagnosis code).

(1) Disconnect the negative battery terminal.

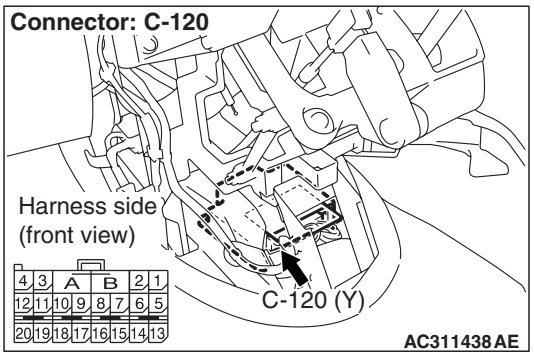

(2) Disconnect connectors C-120 and then reconnect them.
(3) Connect the negative battery terminal.
(4) Erase the diagnosis code memory, and check the diagnosis code.

Q: Is diagnosis code B1430 out put?
YES : Go to Step 5.
NO : The procedure is complete. It is assumed that diagnosis code B1430 set as connector C-120 was engaged improperly.

STEP 5. Connector lock check: SRS-ECU connector C-120 and side-airbag module (LH) connector D-22 (M.U.T.-III diagnosis code).

(1) Disconnect the negative battery terminal.

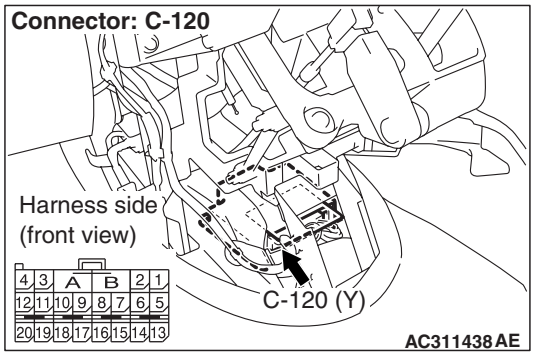

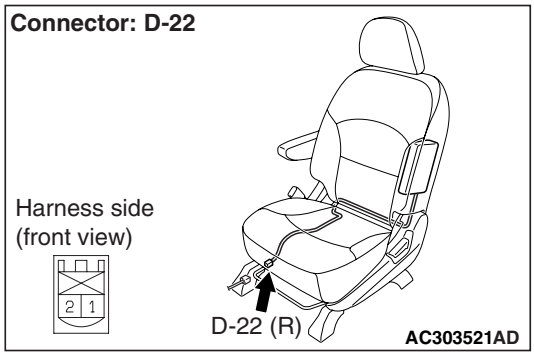

(2) Disconnect connectors C-120 and D-22 and then reconnect them.
(3) Connect the negative battery terminal.
(4) Erase the diagnosis code memory, and check the diagnosis code.

Q: Is diagnosis code B1430 out put?
YES : Go to Step 6.
NO : The procedure is complete. It is assumed that diagnosis code B1430 set because connector C-120 or D-22 was engaged improperly.

STEP 6. Check the side-airbag module (LH) (M.U.T.-III diagnosis code).

(1) Disconnect the negative battery terminal.

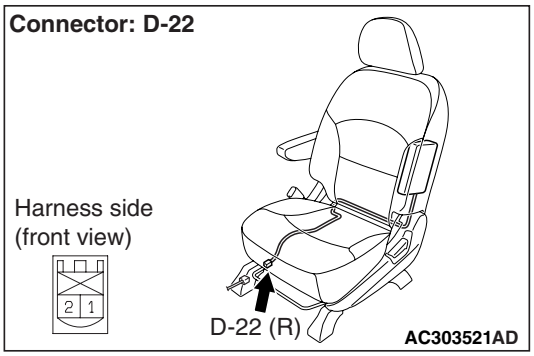

(2) Disconnect the side-airbag module (LH) connector D-22.

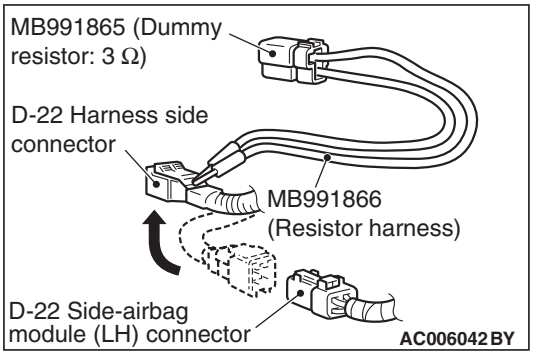

(3) Connect special tool dummy resistor (MB991865) to special tool resistor harness (MB991866).

⚠ CAUTION

Do not insert a test probe into the terminal from its front side directly, as the connector contact pressure may be weakened.

(4) Insert special tool MB991866 into the D-22 harness side connector by backprobing.
(5) Connect the negative battery terminal.
(6) Erase diagnosis code memory, and check the diagnosis code.

Q: Is diagnosis code B1430 set?

YES : Go to Step 7.

NO : Replace the frame assembly of the front seat (LH) (Refer to GROUP 52A, Front Seat P.52A-23).

STEP 7. Check the side-airbag module (LH) circuit. Resistance measurement at the SRS-ECU connector C-120.

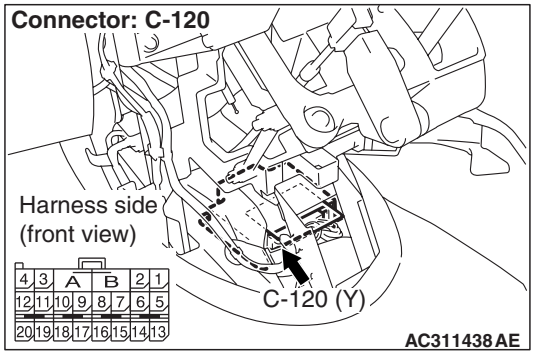

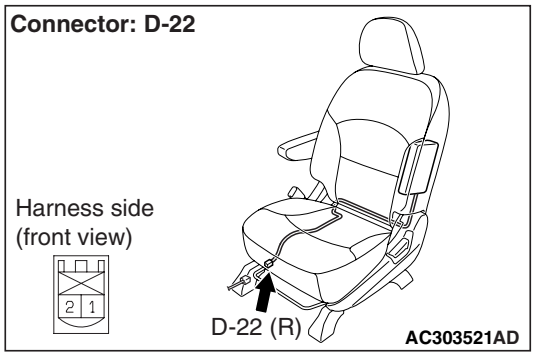

(1) Disconnect SRS-ECU connector C-120.

⚠ *DANGER*

To prevent the air bag from deploying unintentionally, disconnect the side-airbag module (LH) connector D-22 to short the squib circuit.

(2) Disconnect left hand side-airbag module (LH) connector D-22.

⚠ CAUTION

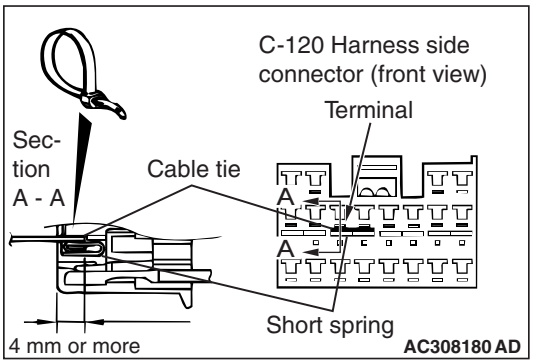

Insert an insulator such as a cable tie to a depth of 4mm or more, otherwise the short spring will not be released.

Main Index
Group TOC

(3) Insert a cable tie [3 mm wide, 0.5 mm thick] between terminals 9, 10 and the short spring to release the short spring.

⚠ CAUTION

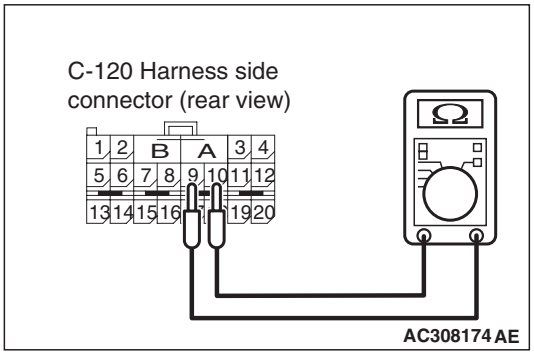

Do not insert a test probe into the terminal from its front side directly, as the connector contact pressure may be weakened.

(4) Check for continuity between C-120 harness side connector terminals 9 and 10.

OK: Open circuit

Q: Is the check result normal?

YES : Go to Step 8.

NO : Repair the harness wires between SRS-ECU connector C-120 (terminal No.9 and 10) and side-airbag module (LH) connector D-22 (terminal No.1 and 2).

STEP 8. Check whether the diagnosis code is reset.

Q: Is diagnosis code B1430 set?

YES : Replace the SRS-ECU (Refer to P.52B-332).

NO : An intermittent malfunction is suspected (Refer to GROUP 00, How to Use Troubleshooting/Inspection Service Points P.00-5).

Code No.B1431: Side-Airbag Module (LH) (Squib) System Fault 2 (Open in the Squib Circuit)

Side-Airbag Module (Squib) (LH) Circuit

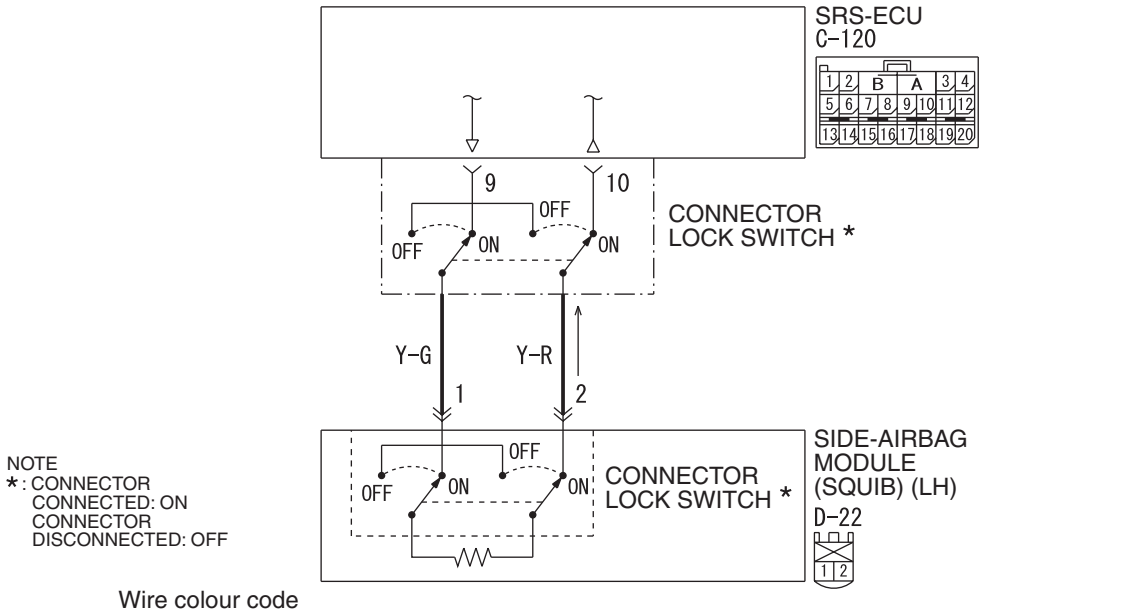

Wire colour code
B : Black LG : Light green G : Green L : Blue W : White Y : Yellow SB : Sky blue
BR : Brown O : Orange GR : Grey R : Red P : Pink V : Violet PU : Purple

W6X52X003A

Main Index
Group TOC

⚠ CAUTION

If diagnosis code B1431 is set in the SRS-ECU, always diagnose the CAN bus lines.

OPERATION

- The SRS-ECU judges how severe a collision is by detecting signals from the left and right side impact sensors. If the impact is over a predetermined level, the SRS-ECU sends an ignition signal. At this time, if the side-airbag safing G-sensor is on, the SRS side-airbag will inflate.
- The ignition signal is input to the side-airbag module to inflate the side-airbag.

DIAGNOSIS CODE SET CONDITIONS

This diagnosis code is set if there is abnormal resistance between the input terminals of the side-airbag module (LH) (squib).

PROBABLE CAUSES

- Open circuit in the side-airbag module (squib) (LH) circuit
- Improper connector contact
- Malfunction of the SRS-ECU

DIAGNOSIS PROCEDURE

STEP 1. M.U.T.-III CAN bus diagnostics

Use the M.U.T.-III to diagnose the CAN bus lines.

Q: Is the check result normal?

YES : Go to Step 2

NO : Repair the CAN bus lines (Refer to GROUP 54F, Diagnosis P.54F-13).

STEP 2. Check whether the diagnosis code is reset.

Check again if the diagnosis code is set.

(1) Erase the diagnosis code.

(2) Ignition: "LOCK" (OFF) position to "ON"

(3) On completion, check that the diagnosis code is not reset.

Q: Is the diagnosis code set?

YES : Go to Step 3.

NO : There is an intermittent malfunction such as poor engaged connector(s) or open circuit (Refer to GROUP 00, How to Cope with Intermittent Malfunction P.00-5).

STEP 3. Check the side-airbag module (LH) (M.U.T.-III diagnosis code).

(1) Disconnect the negative battery terminal.

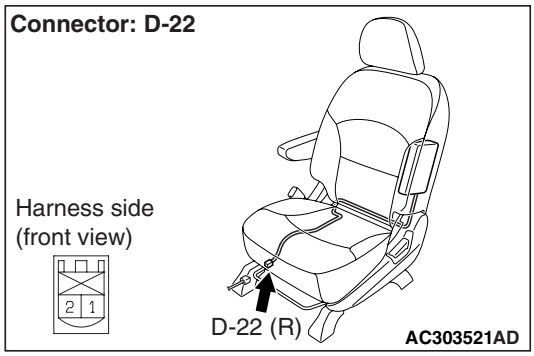

(2) Disconnect the side-airbag module (LH) connector D-22.

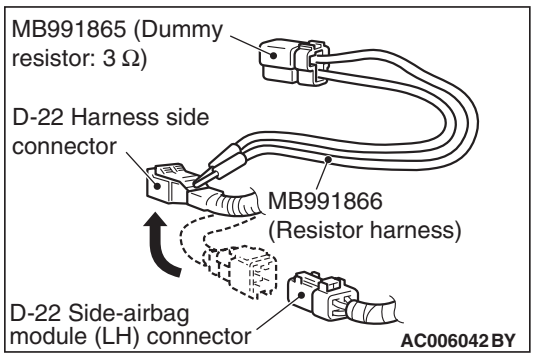

(3) Connect special tool dummy resistor (MB991865) to special tool resistor harness (MB991866).

⚠ CAUTION

Do not insert a test probe into the terminal from its front side directly, as the connector contact pressure may be weakened.

(4) Insert special tool MB991866 into the D-22 harness side connector by backprobing.

(5) Connect the negative battery terminal.

(6) Erase diagnosis code memory, and then check the diagnosis code.

Q: Is diagnosis code B1431 set?

YES : Go to Step 4.

NO : Replace the frame assembly of the front seat (LH) (Refer to GROUP 52A, Front Seat P.52A-23).

STEP 4. Resistance measurement between the SRS-ECU connector C-120 (terminal No.9 and 10) and the side-airbag module (LH) connector D-22 (terminal No.1 and 2).

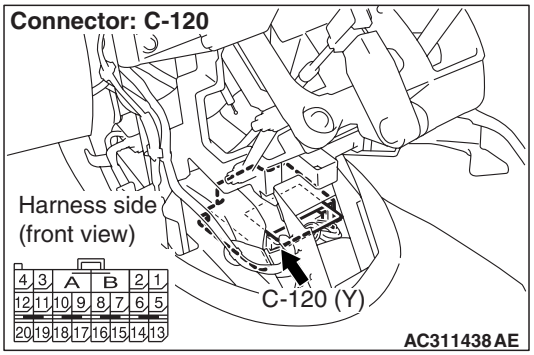

(1) Disconnect SRS-ECU connector C-120.

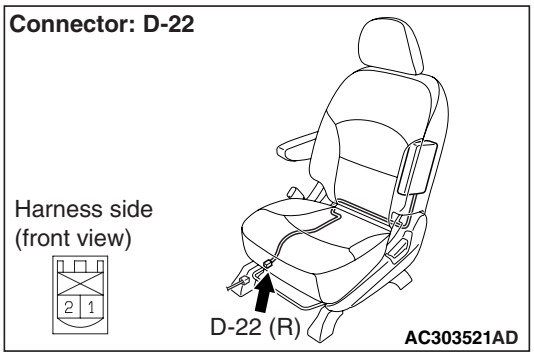

(2) Disconnect side-airbag module (LH) connector D-22.

⚠ CAUTION

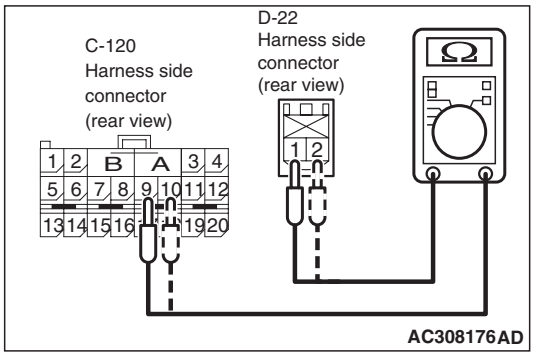

Do not insert a test probe into the terminal from its front side directly, as the connector contact pressure may be weakened.

(3) Check for continuity between the following terminals.
- SRS-ECU connector C-120 (terminal No.9) and the side-airbag module (LH) connector D-22 (terminal No.1)
- SRS-ECU connector C-120 (terminal No.10) and the side-airbag module (LH) connector D-22 (terminal No.2)

OK: Less than 2 Ω

Q: Are the check results normal?

YES : Go to Step 5.

NO : Repair the harness wires between SRS-ECU connector C-120 (terminal No.9 and 10) and side-airbag module (LH) connector D-22 (terminal No.1 and 2).

STEP 5.Check whether the diagnosis code is reset.

Q: Is diagnosis code B1431 set?

YES : Replace the SRS-ECU (Refer to P.52B-332).

NO : An intermittent malfunction is suspected (Refer to GROUP 00, How to Use Troubleshooting/Inspection Service Points P.00-5).

Main Index
Group TOC

Code No.B1432: Side-Airbag Module (LH) (Squib) System Fault Earth Circuit (Short-Circuited to Earth)

Side-Airbag Module (Squib) (LH) Circuit

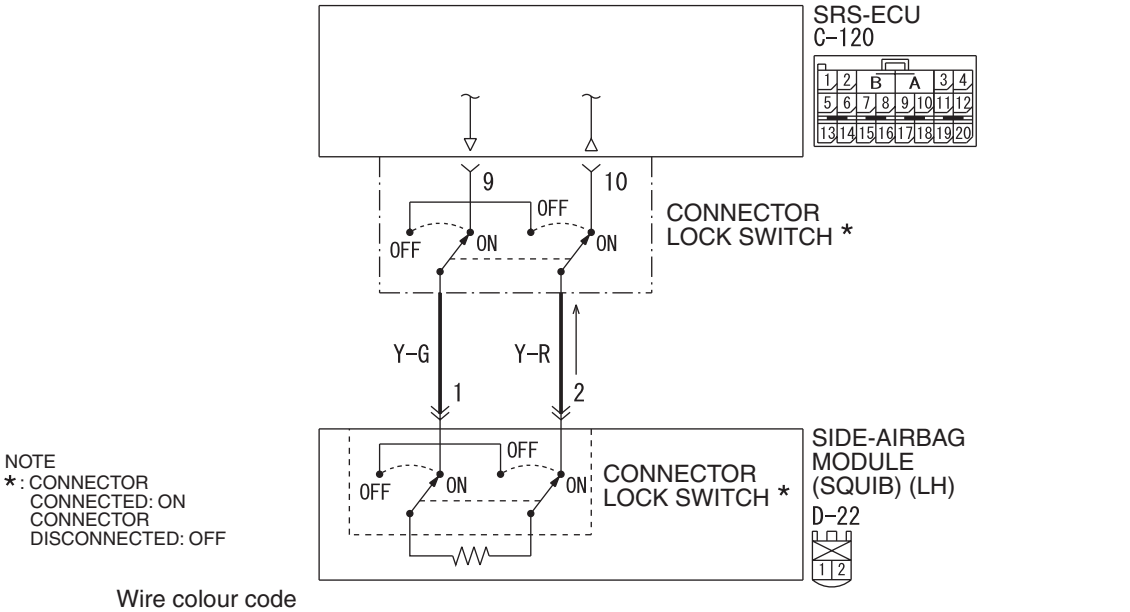

Wire colour code
B : Black LG : Light green G : Green L : Blue W : White Y : Yellow SB : Sky blue
BR : Brown O : Orange GR : Grey R : Red P : Pink V : Violet PU : Purple

W6X52X003A

⚠ CAUTION

If diagnosis code B1432 is set in the SRS-ECU, always diagnose the CAN bus lines.

OPERATION

- The SRS-ECU judges how severe a collision is by detecting signals from the left and right side impact sensors. If the impact is over a predetermined level, the SRS-ECU sends an ignition signal. At this time, if the side-airbag safing G-sensor is on, the SRS side-airbag will inflate.
- The ignition signal is input to the side-airbag module to inflate the side-airbag.

DIAGNOSIS CODE SET CONDITIONS

This diagnosis code is set if there is abnormal resistance between the input terminals of the side-airbag module (LH) (squib).

PROBABLE CAUSES

- Damaged wiring harnesses or connectors
- Short to earth in the left hand side-airbag module (squib) harness
- Malfunction of the SRS-ECU

DIAGNOSIS PROCEDURE

STEP 1. M.U.T.-III CAN bus diagnostics

Use the M.U.T.-III to diagnose the CAN bus lines.

Q: Is the check result normal?

YES : Go to Step 2.

NO : Repair the CAN bus lines (Refer to GROUP 54F, Diagnosis P.54F-13).

STEP 2. Check whether the diagnosis code is reset.

Check again if the diagnosis code is set.

(1) Erase the diagnosis code.
(2) Ignition: "LOCK" (OFF) position to "ON"
(3) On completion, check that the diagnosis code is not reset.

Q: Is the diagnosis code set?

YES : Go to Step 3.

NO : There is an intermittent malfunction such as poor engaged connector(s) or open circuit (Refer to GROUP 00, How to Cope with Intermittent Malfunction P.00-5).

Main Index
Group TOC

STEP 3. Check the side-airbag module (LH) (M.U.T.-III diagnosis code).

(1) Disconnect the negative battery terminal.

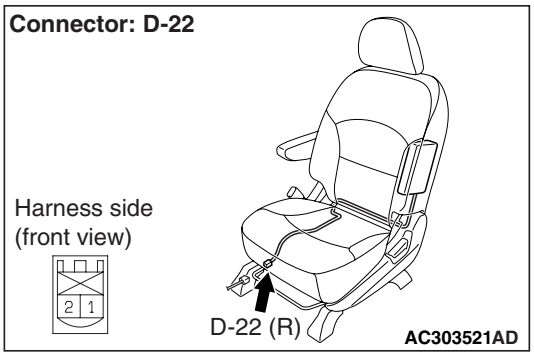

(2) Disconnect the side-airbag module (LH) connector D-22.

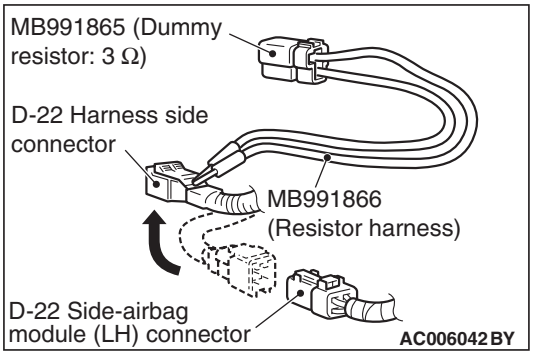

(3) Connect special tool dummy resistor (MB991865) to special tool resistor harness (MB991866).

⚠ CAUTION

Do not insert a test probe into the terminal from its front side directly, as the connector contact pressure may be weakened.

(4) Insert special tool MB991866 into the D-22 harness side connector by backprobing.
(5) Connect the negative battery terminal.
(6) Erase the diagnosis code memory, and check the diagnosis code.

Q: Is diagnosis code B1432 set?

YES : Go to Step 4.

NO : Replace the frame assembly of the front seat (LH) (Refer to GROUP 52A, Front Seat P.52A-23).

STEP 4. Check the side-airbag module (LH) circuit. Resistance measurement at the SRS-ECU connector C-120.

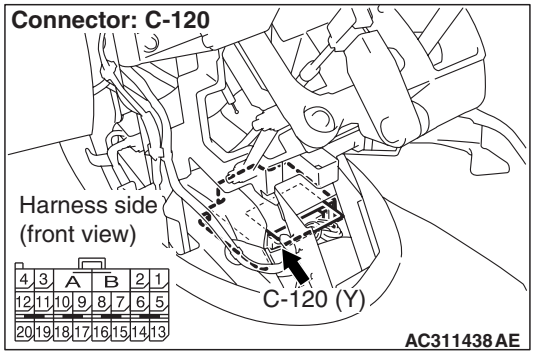

(1) Disconnect SRS-ECU connector C-120.

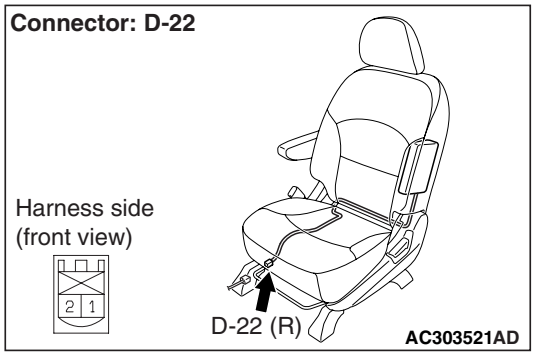

(2) Disconnect side-airbag module (LH) connector D-22

⚠ CAUTION

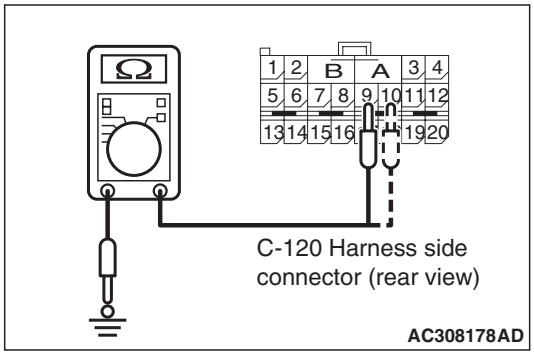

Do not insert a test probe into the terminal from its front side directly, as the connector contact pressure may be weakened.

(3) Check for continuity between C-120 harness side connector terminals 9, 10 and body earth.

OK: Open circuit

Q: Is the check result normal?

YES : Go to Step 5.

NO : Repair the harness wires between SRS-ECU connector C-120 (terminal No.9 and 10) and side-airbag module (LH) connector D-22 (terminal No.1 and 2).

Main Index
Group TOC

STEP 5. Check whether the diagnosis code is reset.

Q: Is diagnosis code B1432 set?

YES : Replace the SRS-ECU (Refer to P.52B-332).

NO : . An intermittent malfunction is suspected (Refer to GROUP 00, How to Use Troubleshooting/Inspection Service Points P.00-5).

Code No.B1433: Side-Airbag Module (LH) (Squib) System Fault Power Supply Circuit (Short-Circuited to Power Supply)

Side-Airbag Module (Squib) (LH) Circuit

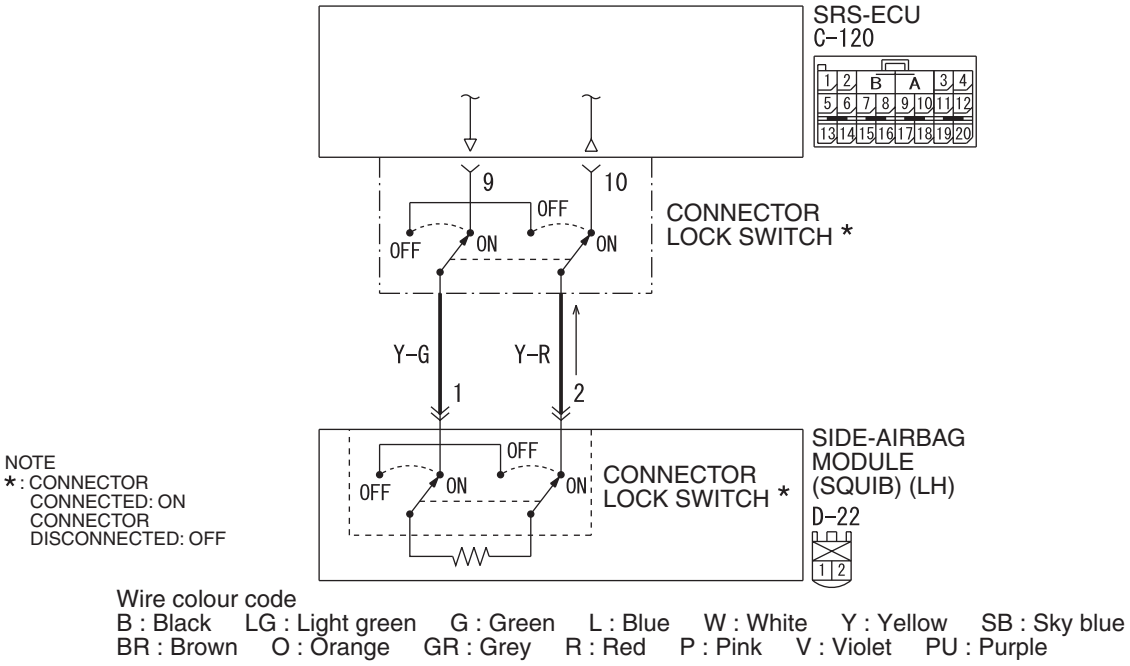

W6X52X003A

⚠ CAUTION

If diagnosis code B1433 is set in the combination meter, always diagnose the CAN bus lines.

OPERATION

- The SRS-ECU judges how severe a collision is by detecting signals from the left and right side impact sensors. If the impact is over a predetermined level, the SRS-ECU sends an ignition signal. At this time, if the side-airbag safing G-sensor is on, the SRS side-airbag will inflate.
- The ignition signal is input to the side-airbag module to inflate the side-airbag.

DIAGNOSIS CODE SET CONDITIONS

This diagnosis code is set if there is abnormal resistance between the input terminals of the side-airbag module (LH) (squib).

PROBABLE CAUSES

- Damaged wiring harnesses or connectors
- Short to the power supply in the side-airbag module (LH) (squib) harness
- Malfunction of the SRS-ECU

Main Index
Group TOC

DIAGNOSIS PROCEDURE

STEP 1. M.U.T.-III CAN bus diagnostics

Use the M.U.T.-III to diagnose the CAN bus lines.

Q: Is the check result normal?

YES : Go to Step 2

NO : Repair the CAN bus lines (Refer to GROUP 54F, Diagnosis P.54F-13).

STEP 2. Check whether the diagnosis code is reset.

Check again if the diagnosis code is set.

(1) Erase the diagnosis code.
(2) Ignition: "LOCK" (OFF) position to "ON"
(3) On completion, check that the diagnosis code is not reset.

Q: Is the diagnosis code set?

YES : Go to Step 3.

NO : There is an intermittent malfunction such as poor engaged connector(s) or open circuit (Refer to GROUP 00, How to Cope with Intermittent Malfunction P.00-5).

STEP 3. Check the side-airbag module (LH) (M.U.T.-III diagnosis code).

(1) Disconnect the negative battery terminal.

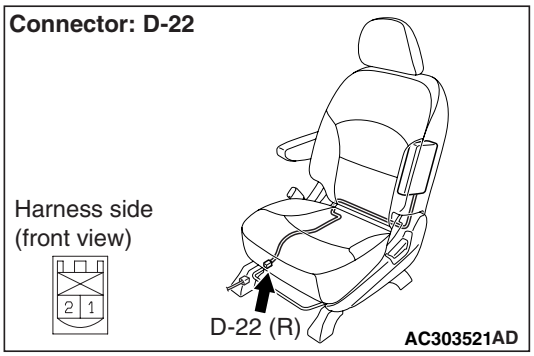

(2) Disconnect the side-airbag module (LH) connector D-22.

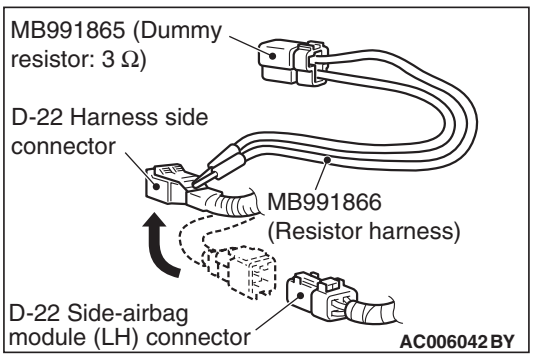

(3) Connect special tool dummy resistor (MB991865) to special tool resistor harness (MB991866).

⚠ CAUTION

Do not insert a test probe into the terminal from its front side directly, as the connector contact pressure may be weakened.

(4) Insert special tool MB991866 into the D-22 harness side connector by backprobing.
(5) Connect the negative battery terminal.
(6) Erase the diagnosis code memory, and check the diagnosis code.

Q: Is diagnosis code B1433 set?

YES : Go to Step 4.

NO : Replace the frame assembly of the front seat (LH) (Refer to GROUP 52A, Front Seat P.52A-23).

STEP 4. Check the side-airbag module (RH) circuit. Voltage measurement at the SRS-ECU connector C-120.

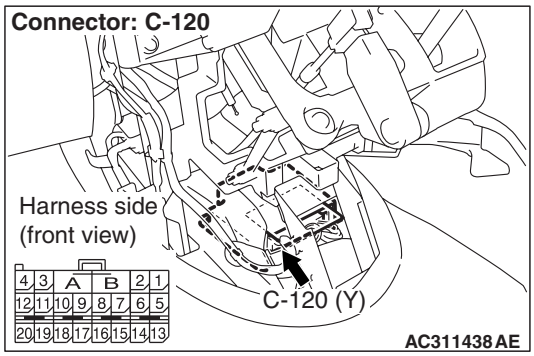

(1) Disconnect SRS-ECU connector C-120.

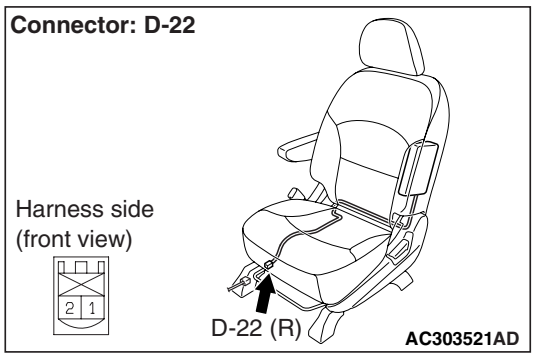

(2) Disconnect left hand side-airbag module (LH) connector D-22.

(3) Turn the ignition switch to the "ON" position.

⚠ CAUTION

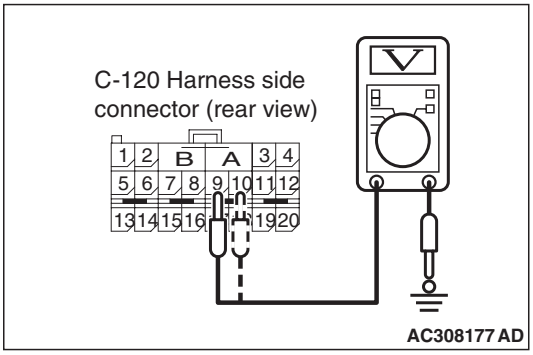

Do not insert a test probe into the terminal from its front side directly, as the connector contact pressure may be weakened.

(4) Measure the voltage between C-120 harness side connector terminals 9, 10 and body earth.

OK: 0 V

Q: Is the check result normal?

YES : Go to Step 5.

NO : Repair the harness wires between SRS-ECU connector C-120 (terminal No.9 and 10) and side-airbag module (LH) connector D-22 (terminal No.1 and 2).

STEP 5. Check whether the diagnosis code is reset.

Q: Is diagnosis code B1433 set?

YES : Replace the SRS-ECU (Refer to P.52B-332).

NO : An intermittent malfunction is suspected (Refer to GROUP 00, How to Use Troubleshooting/Inspection Service Points P.00-5).

Code No.B1437: Side Impact Sensor (Front) (LH) Power Supply Circuit System

Side Impact Sensor (Front) (LH) Circuit

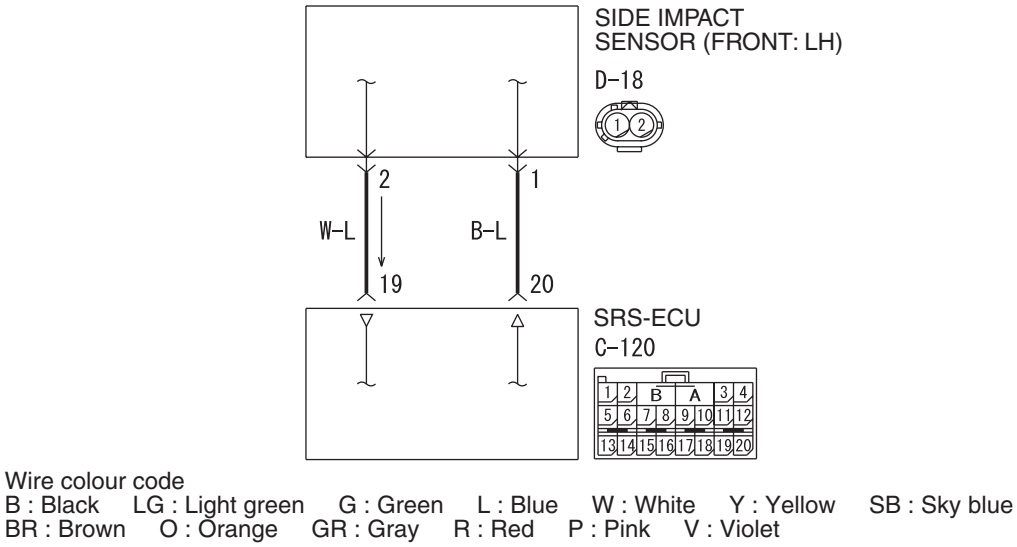

⚠ CAUTION

If diagnosis code B1437 is set in the SRS-ECU, always diagnose the CAN main bus line.

OPERATION

The side impact sensor includes an analogue G-sensor and CPU, etc. The CPU monitors the analogue G-sensor output signal. If the CPU judges that the side-airbags and curtain air bags should be deployed, it sends a fire signal to the SRS-ECU to deploy the side-airbags and curtain air bags. In addition, the CPU diagnoses the internal components of the side impact sensor. If a malfunction occurs, it requests the SRS-ECU to set a diagnosis code.

Main Index
Group TOC

DIAGNOSIS CODE SET CONDITIONS

This diagnosis code is set if the power supply voltage of the side impact sensor (front) (LH) drops below the rated value for a continuous period of 5 seconds or more. However, diagnosis code B1437 will be automatically cleared and the SRS warning lamp will switch off if the condition returns to normal.

TROUBLESHOOTING HINTS

- Damaged wiring harnesses or connectors
- Malfunction of the side impact sensor (front) (LH)
- Malfunction of the SRS-ECU

PROBABLE CAUSES

STEP 1. M.U.T.-III CAN bus diagnostics

Use the M.U.T.-III to diagnose the CAN bus lines.

Q: Is the check result normal?

YES : Go to Step 2.

NO : Repair the CAN bus line (Refer to GROUP 54F, Diagnosis P.54F-13).

STEP 2. Check whether the diagnosis code is reset.

Check again if the diagnosis code is set.

(1) Erase the diagnosis code.
(2) Ignition: "LOCK" (OFF) position to "ON"
(3) On completion, check that the diagnosis code is not reset.

Q: Is the diagnosis code set?

YES : Go to Step 3.

NO : There is an intermittent malfunction such as poor engaged connector(s) or open circuit (Refer to GROUP 00, How to Cope with Intermittent Malfunction P.00-5).

STEP 3. Check the harness wires for open circuit or short circuit between SRS-ECU connector C-120 (terminal No.19 and 20) and side impact sensor (front) (LH) connector D-18 (terminal No.1 and 2).

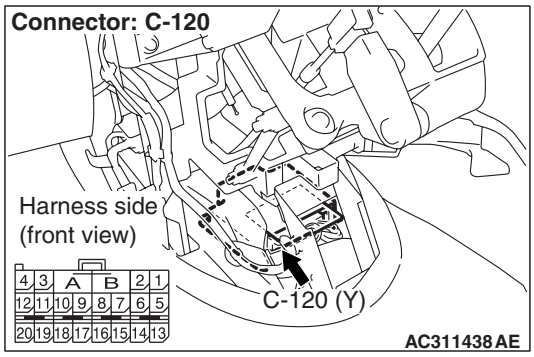

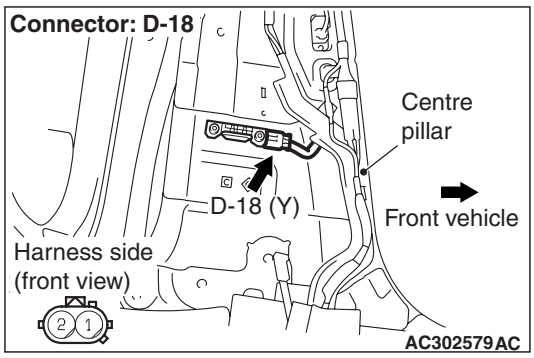

Q: Are the harness wires between SRS-ECU connector C-120 (terminal No.19 and 20) and side impact sensor (front) (LH) connector D-18 (terminal No.1 and 2) in good condition?

YES : Go to Step 4.

NO : Replace the harness wires between SRS-ECU connector C-120 (terminal No.19 and 20) and side impact sensor (front) (LH) connector D-18 (terminal No.1 and 2).

STEP 4. Check the side impact sensor (front) (LH) (M.U.T.-III diagnosis code).

(1) Disconnect the negative battery terminal.
(2) Replace the side impact sensor (front) (LH) with the side impact sensor (front) (RH).
(3) Connect the negative battery terminal.
(4) Erase diagnosis code from memory, and check the diagnosis code.

Q: Is diagnosis code B1437 set?

YES : Replace the SRS-ECU (Refer to P.52B-332).

NO : Replace the side impact sensor (front) (LH) with a new one (Refer to P.52B-347). Go to Step 5.

Main Index
Group TOC

STEP 5. Check whether the diagnosis code is reset.

Q: Is diagnosis code B1437 set?

YES : Replace the SRS-ECU (Refer to P.52B-332).

NO : . An intermittent malfunction is suspected (Refer to GROUP 00, How to Use Troubleshooting/Inspection Service Points P.00-5).

Code No.B1438: Side Impact Sensor (Front) (LH) (Squib) for Power Supply Circuit
Code No.B1439: Side Impact Sensor (Front) (LH) (Squib) for Communication System

Side Impact Sensor (Front) (LH) Circuit

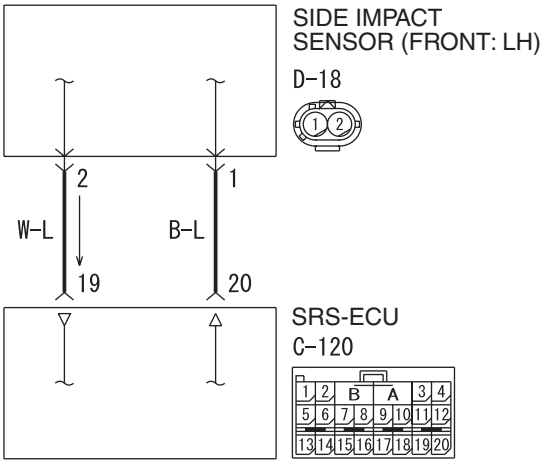

Wire colour code
B : Black LG : Light green G : Green L : Blue W : White Y : Yellow SB : Sky blue
BR : Brown O : Orange GR : Gray R : Red P : Pink V : Violet

W4X52E006A

⚠ CAUTION

If diagnosis code B1438 or B1439 is set in the SRS-ECU, always diagnose the CAN main bus line.

OPERATION

The side impact sensor includes an analogue G-sensor and CPU, etc. The CPU monitors the analogue G-sensor output signal. If the CPU judges that the side-airbags and curtain air bags should be deployed, it sends a fire signal to the SRS-ECU to deploy the side-airbags and curtain air bags. In addition, the CPU diagnoses the internal components of the side impact sensor. If a malfunction occurs, it requests the SRS-ECU to set a diagnosis code.

DIAGNOSIS CODE SET CONDITIONS

These diagnosis codes are set if communication between the side impact sensor (front) (LH) and the SRS-ECU is not possible or faulty.

PROBABLE CAUSES

- Damaged wiring harnesses or connectors
- Malfunction of the side impact sensor (front) (LH)
- Malfunction of the SRS-ECU

Main Index
Group TOC

DIAGNOSIS PROCEDURE

STEP 1. M.U.T.-III CAN bus diagnostics

Use the M.U.T.-III to diagnose the CAN bus lines.

Q: Is the check result normal?

YES : Go to Step 2 .

NO : Repair the CAN bus line (Refer to GROUP 54F, Diagnosis P.54F-13).

STEP 2. Check whether the diagnosis code is reset.

Check again if the diagnosis code is set.

(1) Erase the diagnosis code.
(2) Ignition: "LOCK" (OFF) position to "ON"
(3) On completion, check that the diagnosis code is not reset.

Q: Is the diagnosis code set?

YES : Go to Step 3 .

NO : There is an intermittent malfunction such as poor engaged connector(s) or open circuit (Refer to GROUP 00, How to Cope with Intermittent Malfunction P.00-5).

STEP 3. Check the side impact sensor (LH) (M.U.T.-III diagnosis code).

(1) Disconnect the negative battery terminal.
(2) Replace the side impact sensor (front) (LH) with the side impact sensor (front) (RH).
(3) Connect the negative battery terminal.
(4) Erase diagnosis code from memory, and check the diagnosis code.

Q: Is diagnosis code B1428 or B1429 set?

YES : Replace the side impact sensor (front) (LH) with a new one (Refer to P.52B-347). Go to Step 5 .

NO : Go to Step 4 .

STEP 4. Check the harness wires for open circuit or short circuit between SRS-ECU connector C-120 (terminal No.19 and 20) and side impact sensor (front) (LH) connector D-18 (terminal No.1 and 2).

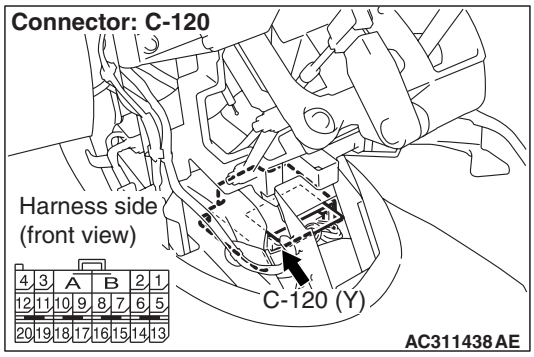

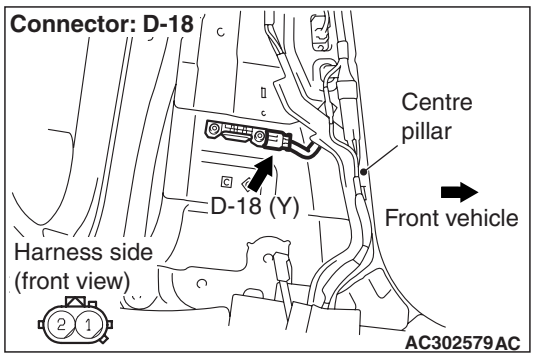

Q: Are the harness wires between SRS-ECU connector C-120 (terminal No.19 and 20) and side impact sensor (front) (LH) connector D-18 (terminal No.1 and 2) in good condition?

YES : Go to Step 5 .

NO : . Repair the harness wires between SRS-ECU connector C-120 (terminal No.19 and 20) and side impact sensor (front) (LH) connector D-18 (terminal No.1 and 2).

STEP 5. Check whether the diagnosis code is reset.

Q: Is diagnosis code B1438 or B1439 set?

YES : Replace the SRS-ECU (Refer to P.52B-332).

NO : An intermittent malfunction is suspected (Refer to GROUP 00, How to Use Troubleshooting/Inspection Service Points P.00-5).

Main Index
Group TOC

Code No.B1440: Curtain air bag module (squib) (RH) system (short-circuited between terminals of the squib circuit)

Curtain Air Bag Module (Squib) (RH) Circuit

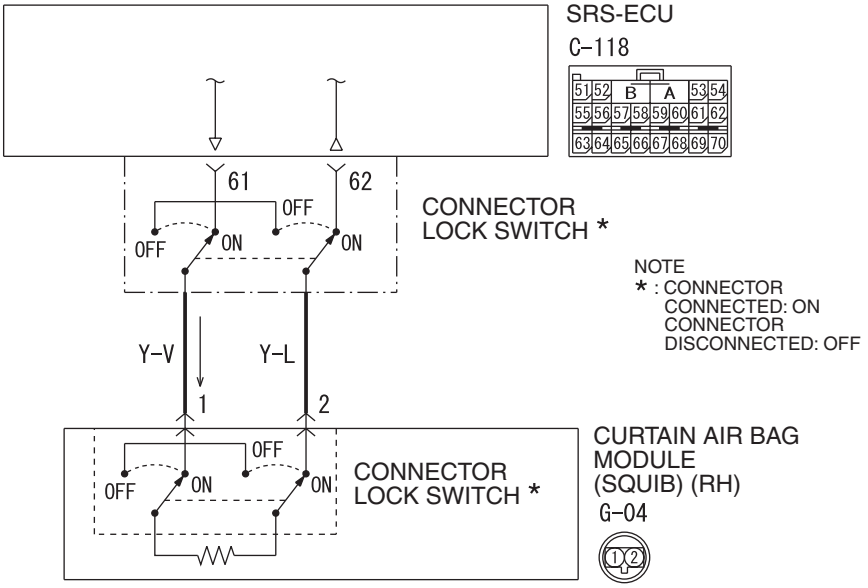

Wire colour code
B : Black LG : Light green G : Green L : Blue W : White Y : Yellow SB : Sky blue
BR : Brown O : Orange GR : Gray R : Red P : Pink V : Violet

W4X52E012A

⚠ CAUTION

If diagnosis code B1440 is set in the SRS-ECU, always diagnose the CAN bus lines.

OPERATION

The SRS-ECU judges how severe a collision is by detecting signals from the side impact sensors and the side-airbag safing G-sensor. If the impact is over a predetermined level, the SRS-ECU outputs an ignition signal. At this time, if the side air bag safing G-sensor is on, the curtain air bag module will deploy.

DIAGNOSIS CODE SET CONDITIONS

This diagnosis code is set if one curtain air bag module squib (RH) wire shorted to the other. However, if no diagnosis code resets, the SRS warning lamp will be switched off (diagnosis code will be retained).

PROBABLE CAUSES

- Improper engaged connector or defective short spring*
- Short circuit between the curtain air bag module (squib) (RH) circuit terminals
- Damaged connector(s)
- Malfunction of the SRS-ECU

*NOTE: *: The squib circuit connectors integrate a "short" spring (which prevents the air bag from deploying unintentionally due to static electricity by shorting the positive wire to the earth wire in the squib circuit when the connectors are disconnected). Therefore, if connector C-118 or G-04 is damaged or improperly engaged, the short spring may not be released when the connector is connected.*

DIAGNOSIS PROCEDURE

STEP 1. M.U.T.-III CAN bus diagnostics

Use the M.U.T.-III to diagnose the CAN bus lines.

Q: Is the check result normal?

YES : Go to Step 2

NO : Repair the CAN bus lines (Refer to GROUP 54F, Diagnosis P.54F-13).

STEP 2. Check whether the diagnosis code is reset.

Check again if the diagnosis code is set.
(1) Erase the diagnosis code.
(2) Ignition: "LOCK" (OFF) position to "ON"
(3) On completion, check that the diagnosis code is not reset.

Q: Is the diagnosis code set?
YES : Go to Step 3 .
NO : There is an intermittent malfunction such as poor engaged connector(s) or open circuit (Refer to GROUP 00, How to Cope with Intermittent Malfunction P.00-5).

STEP 3. M.U.T.-III diagnosis code

⚠ CAUTION
To prevent damage to M.U.T.-III MB991958, always turn the ignition switch to the "LOCK" (OFF) position before connecting or disconnecting M.U.T.-III MB991958.

(1) Turn the ignition switch to the "ON" position.
(2) Check if the diagnosis code is set.
(3) Turn the ignition switch to the "LOOK" (OFF) position.

Q: Is diagnosis code B1519 set?
YES : Go to Step 4 .
NO : Go to Step 5 .

STEP 4. Connector lock check: SRS-ECU connector C-118 (M.U.T.-III diagnosis code).

(1) Disconnect the negative battery terminal.

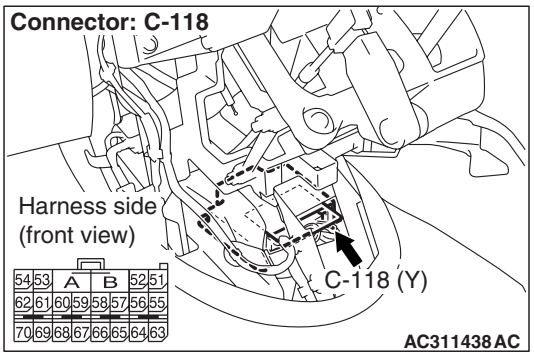

(2) Disconnect connectors C-118, and then reconnect them.
(3) Connect the negative battery terminal.
(4) Erase the diagnosis code memory, and check the diagnosis code.

Q: Is diagnosis code B1440 set?
YES : Go to Step 6 .
NO : The procedure is complete. It is assumed that diagnosis code B1440 set as connector C-118 was engaged improperly.

STEP 5. Connector lock check: SRS-ECU connector C-118 and curtain air bag module (RH) connector G-04 (M.U.T.-III diagnosis code).

(1) Disconnect the negative battery terminal.

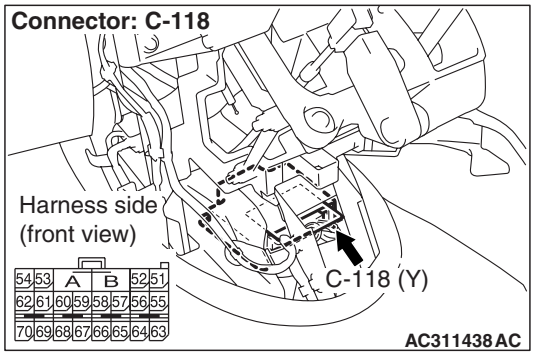

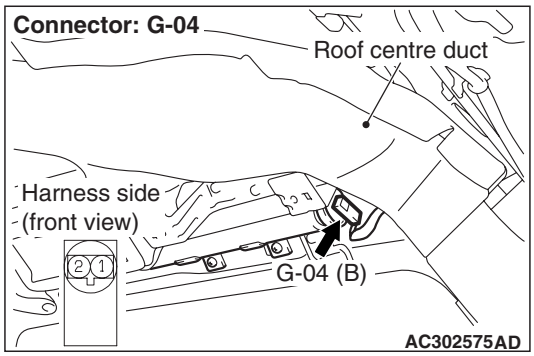

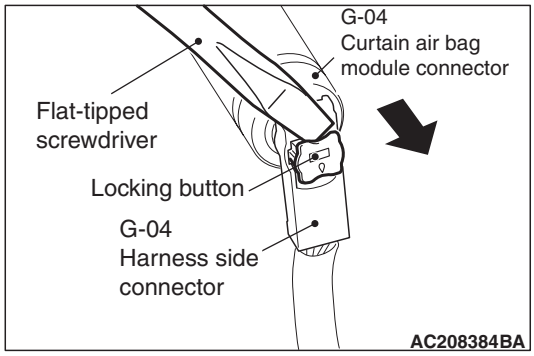

(2) Disconnect connectors C-118 and G-04, and then reconnect them. For connector G-04, use a flat-tipped screwdriver to pull out the locking button at the harness side connector, and then disconnect the connector.
(3) Connect the negative battery terminal.
(4) Erase the diagnosis code memory, and check the diagnosis code.

Q: Is diagnosis code B1440 set?
YES : Go to Step 6 .
NO : The procedure is complete. It is assumed that diagnosis code B1440 set as connector C-118 or G-04 was engaged improperly.

STEP 6. Check the curtain air bag module (RH) (M.U.T.-III diagnosis code).

(1) Disconnect the negative battery terminal.

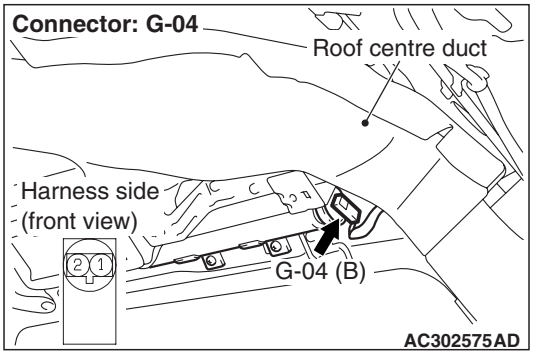

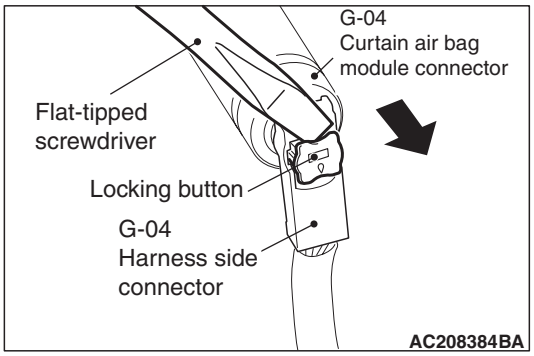

(2) Disconnect curtain air bag module (RH) connector G-04. Use a flat-tipped screwdriver to unlock the locking button at the harness side connector by withdrawing it toward you in two stages, and then disconnect the connector.

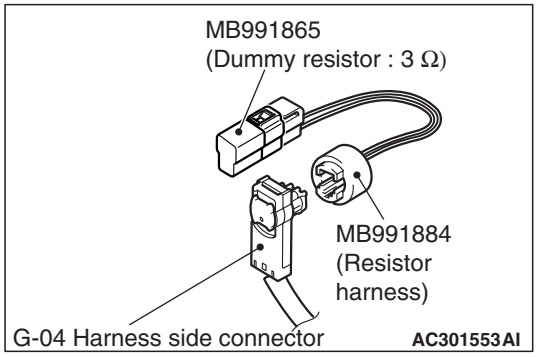

(3) Connect special tool dummy resistor (MB991865) to special tool resistor harness (MB991884).
(4) Connect special tool MB991884 to the G-04 harness side connector.
(5) Connect the negative battery terminal.
(6) Erase diagnosis code memory, and then check the diagnosis code.

Q: Is diagnosis code B1440 set?

YES : Go to Step 7 .

NO : . Replace the curtain air bag module (RH) (Refer to P.52B-342).

STEP 7. Check the curtain air bag module (RH) circuit. Resistance measurement at the SRS-ECU connector C-118

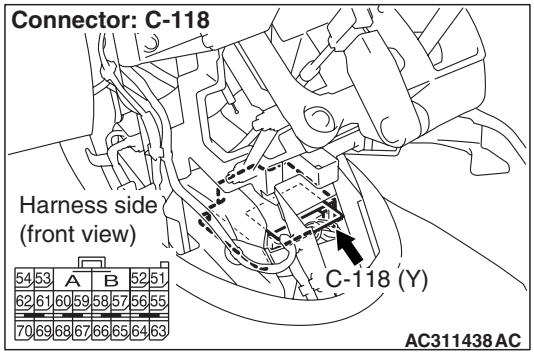

(1) Disconnect SRS-ECU connector C-118.

⚠ DANGER

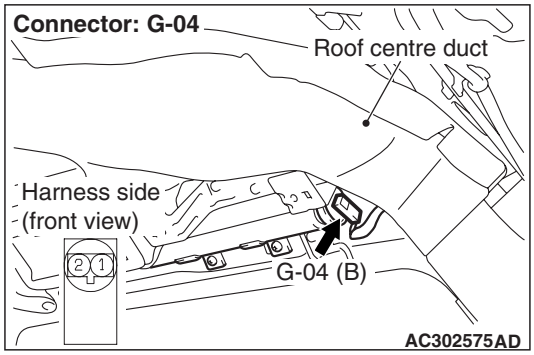

To prevents the air bag from deploying unintentionally, disconnect the curtain air bag module (RH) connector G-04 to short the squib circuit.

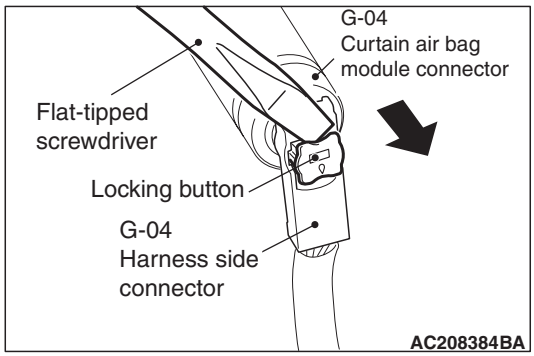

(2) Disconnect curtain air bag module (RH) connector G-04. Use a flat-tipped screwdriver to unlock the locking button at the harness side connector by withdrawing it toward you in two stages, and then disconnect the connector.

Main Index
Group TOC

⚠ CAUTION

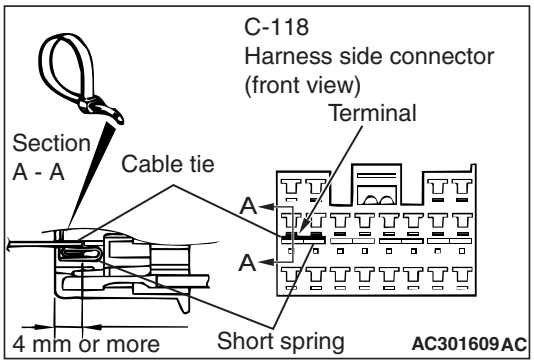

Insert an insulator such as a cable tie to a depth of 4mm or more, otherwise the short bar will not be released.

(3) Insert a cable tie [3 mm wide, 0.5 mm thick] between terminals 61, 62 and the short bar to release the short spring.

⚠ CAUTION

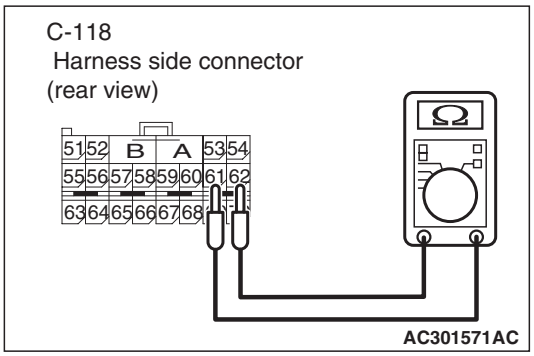

Do not insert a test probe into the terminal from its front side directly as the connector contact pressure may be weakened.

(4) Resistance measurement between C-118 harness side connector terminals 61 and 62.

OK: Open circuit

Q: Is the check result normal?

YES : Go to Step 8 .

NO : Repair the harness wire between SRS-ECU connector C-118 (terminal No.61and 62) and curtain air bag module (RH) connector G-04 (terminal No.1 and 2).

STEP 8. Check whether the diagnosis code is reset.

Q: Is diagnosis code B1440 set?

YES : Replace the SRS-ECU (Refer to P.52B-332).

NO : The procedure is complete. If no malfunctions are found in all steps, an intermittent malfunction is suspected (Refer to GROUP 00, How to Use Troubleshooting/Inspection Service Points P.00-5).

Main Index
Group TOC

Code No.B1441: Curtain air bag module (squib) (RH) system (open-circuited in the squib circuit)

Curtain Air Bag Module (Squib) (RH) Circuit

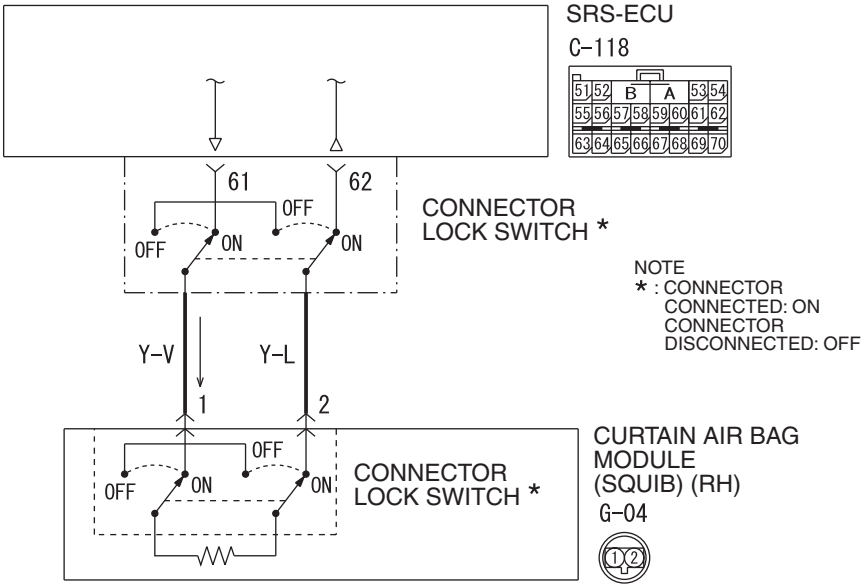

Wire colour code
B : Black LG : Light green G : Green L : Blue W : White Y : Yellow SB : Sky blue
BR : Brown O : Orange GR : Gray R : Red P : Pink V : Violet

W4X52E012A

⚠ CAUTION

If diagnosis code B1441 is set in the SRS-ECU, always diagnose the CAN main bus line.

OPERATION

The SRS-ECU judges how severe a collision is by detecting signals from the side impact sensors and the side air bag safing G-sensor. If the impact is over a predetermined level, the SRS-ECU outputs an ignition signal. At this time, if the side air bag safing G-sensor is on, the curtain air bag module will deploy.

DIAGNOSIS CODE SET CONDITIONS

This diagnosis code is set if curtain air bag module squib (RH) wire(s) are open-circuited. However, if no diagnosis code resets, the SRS warning lamp will be switched off (diagnosis code will be retained).

PROBABLE CAUSES

- Improper connector contact
- Open circuit in the curtain air bag module (squib) (RH) circuit
- Malfunction of the SRS-ECU

DIAGNOSIS PROCEDURE

STEP 1. M.U.T.-III CAN bus diagnostics

Use the M.U.T.-III to diagnose the CAN bus lines.

Q: Is the check result normal?

YES : Go to Step 2 .

NO : Repair the CAN bus line (Refer to GROUP 54F, Diagnosis P.54F-13).

STEP 2. Check whether the diagnosis code is reset.

Check again if the diagnosis code is set.

(1) Erase the diagnosis code.
(2) Ignition: "LOCK" (OFF) position to "ON"
(3) On completion, check that the diagnosis code is not reset.

Q: Is the diagnosis code set?

YES : Go to Step 3 .

NO : There is an intermittent malfunction such as poor engaged connector(s) or open circuit (Refer to GROUP 00, How to Cope with Intermittent Malfunction P.00-5).

Main Index
Group TOC

STEP 3. Check the curtain air bag module (RH) (M.U.T.-III diagnosis code).

(1) Disconnect the negative battery terminal.

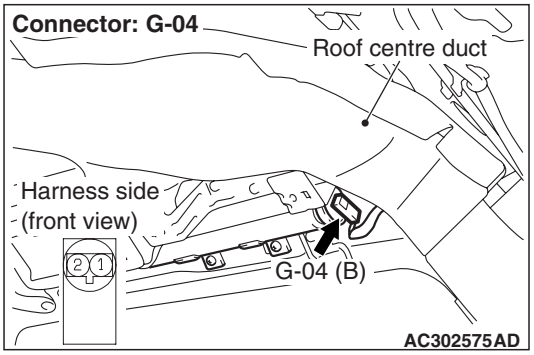

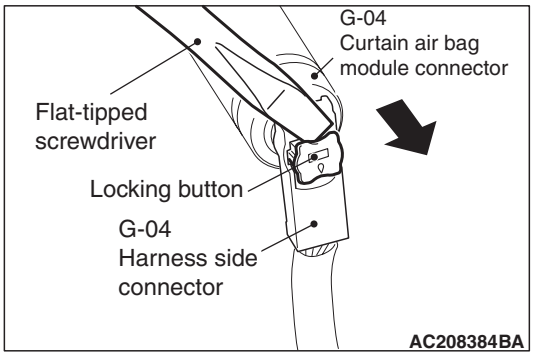

(2) Disconnect curtain air bag module (RH) connector G-04. Use a flat-tipped screwdriver to unlock the locking button at the harness side connector by withdrawing it toward you in two stages, and then disconnect the connector.

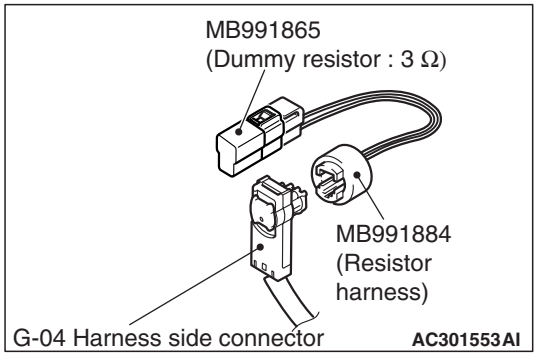

(3) Connect special tool dummy resistor (MB991865) to special tool resistor harness (MB991884).

(4) Connect special tool MB991884 to the G-04 harness side connector.

(5) Connect the negative battery terminal.

(6) Erase diagnosis code memory, and then check the diagnosis code.

Q: Is diagnosis code B1441 set?

YES : Go to Step 4 .

NO : Replace the curtain air bag module (RH) (Refer to P.52B-342).

STEP 4. Resistance measurement between SRS-ECU connector C-118 (terminal No.61 and 62) and the curtain air bag module (RH) connector G-04 (terminal No.1 and 2)

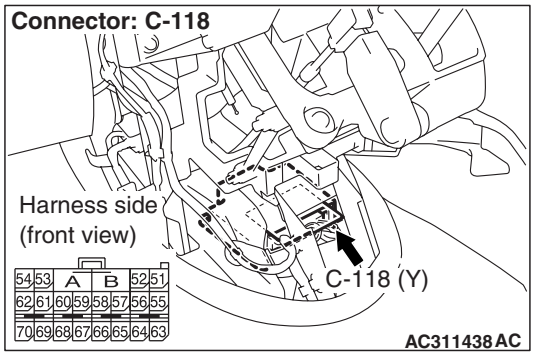

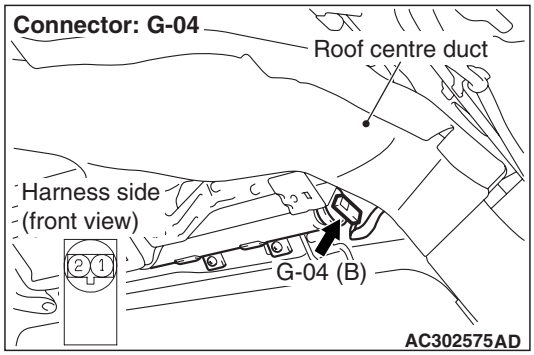

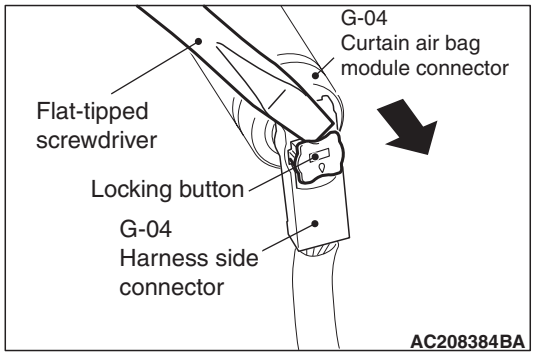

(1) Disconnect SRS-ECU connector C-118 and curtain air bag module (RH) connector G-04, and measure at the wiring harness side. For connector G-04, use a flat-tipped screwdriver to unlock the locking button at the harness side connector by withdrawing it toward you in two stages, and then disconnect the connector.

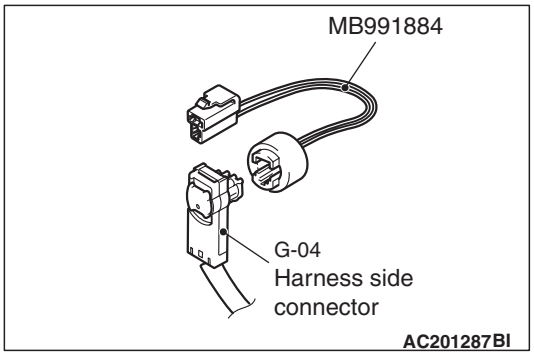

(2) Connect G-04 harness side connector to special tool resistor harness (MB991884).

⚠ CAUTION

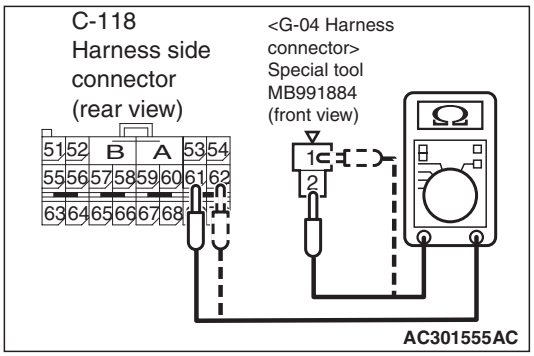

Do not insert a test probe into the terminal from its front side directly as the connector contact pressure may be weakened.

(3) Resistance measurement between the following terminals.
- SRS-ECU connector C-118 terminal No.62 and special tool terminal No.1
- SRS-ECU connector C-118 terminal No.61 and special tool terminal No.2

OK: Less than 2 Ω

Q: Are the check results normal?
YES : Go to Step 5 .
NO : Repair the harness wire between SRS-ECU connector C-118 (terminal No.61and 62) and curtain air bag module (RH) connector G-04 (terminal No.1 and 2).

STEP 5. Check whether the diagnosis code is reset.

Q: Is diagnosis code No.B1441 set?
YES : Replace the SRS-ECU (Refer to P.52B-332).
NO : An intermittent malfunction is suspected (Refer to GROUP 00, How to Use Troubleshooting/Inspection Service Points P.00-5).

Main Index
Group TOC

Code No.B1442: Curtain air bag module (squib) (RH) system (short-circuited to the earth)

Curtain Air Bag Module (Squib) (RH) Circuit

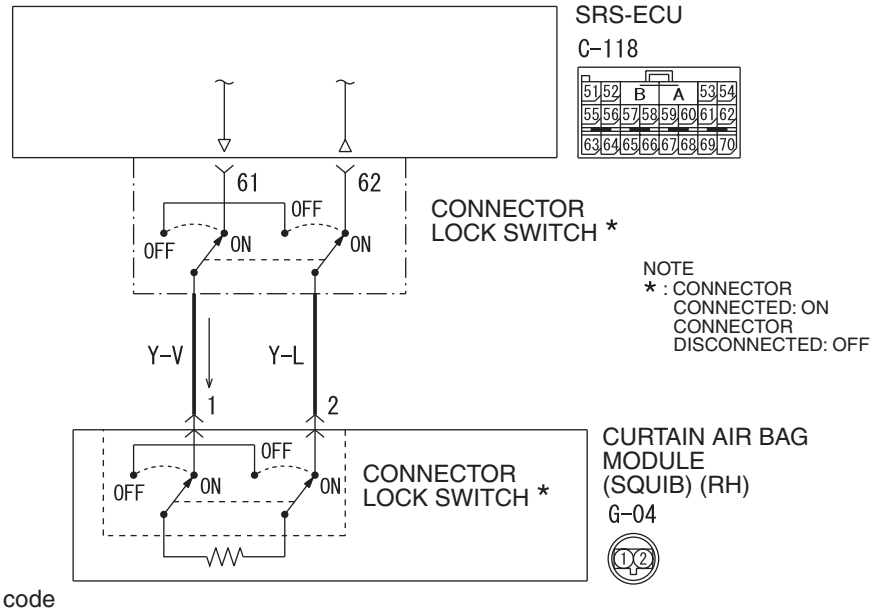

Wire colour code
B : Black LG : Light green G : Green L : Blue W : White Y : Yellow SB : Sky blue
BR : Brown O : Orange GR : Gray R : Red P : Pink V : Violet

W4X52E012A

⚠ CAUTION

If diagnosis code B1442 is set in the SRS-ECU, always diagnose the CAN main bus line.

OPERATION

The SRS-ECU judges how severe a collision is by detecting signals from the side impact sensors and the side air bag safing G-sensor. If the impact is over a predetermined level, the SRS-ECU outputs an ignition signal. At this time, if the side air bag safing G-sensor is on, the curtain air bag module will deploy.

DIAGNOSIS CODE SET CONDITIONS

This diagnosis code is set if the curtain air bag module squib (RH) wire(s) are short-circuited to the earth.

PROBABLE CAUSES

- Damaged wiring harnesses or connectors
- Short to the earth in the curtain air bag module (squib) (RH) harness
- Malfunction of the SRS-ECU

DIAGNOSIS PROCEDURE

STEP 1. M.U.T.-III CAN bus diagnostics

Use the M.U.T.-III to diagnose the CAN bus lines.

Q: Is the check result normal?

YES : Go to Step 2 .

NO : Repair the CAN bus line (Refer to GROUP 54F, Diagnosis P.54F-13).

STEP 2. Check whether the diagnosis code is reset.

Check again if the diagnosis code is set.

(1) Erase the diagnosis code.
(2) Ignition: "LOCK" (OFF) position to "ON"
(3) On completion, check that the diagnosis code is not reset.

Q: Is the diagnosis code set?

YES : Go to Step 3 .

NO : There is an intermittent malfunction such as poor engaged connector(s) or open circuit (Refer to GROUP 00, How to Cope with Intermittent Malfunction P.00-5).

STEP 3. Check the curtain air bag module (RH) (M.U.T.-III diagnosis code).

(1) Disconnect the negative battery terminal.

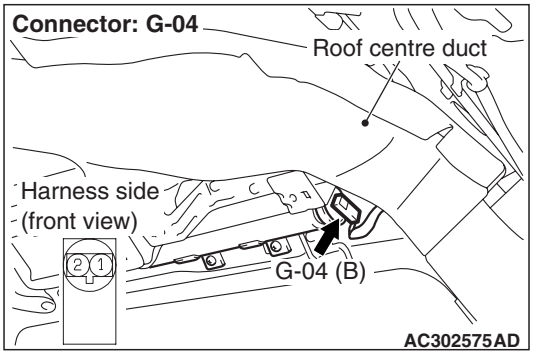

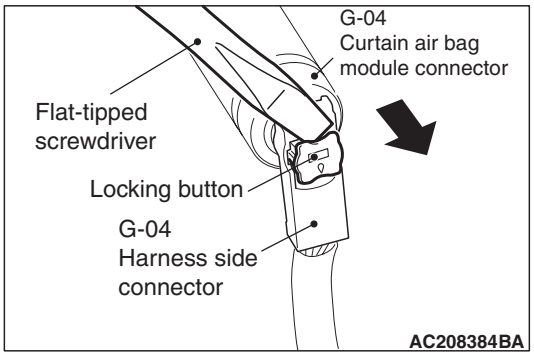

(2) Disconnect curtain air bag module connector G-04. Use a flat-tipped screwdriver to unlock the locking button at the harness side connector by withdrawing it toward you in two stages, and then disconnect the connector.

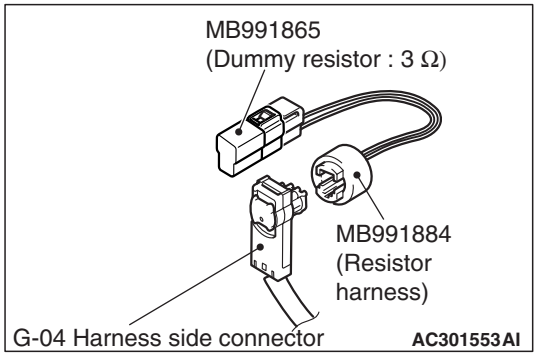

(3) Connect special tool dummy resistor (MB991865) to special tool resistor harness (MB991884).
(4) Connect special tool (MB991884) to the G-04 harness side connector.
(5) Connect the negative battery terminal.
(6) Erase diagnosis code memory, and check the diagnosis code.

Q: Is diagnosis code B1442 set?

YES : . Go to Step 4 .

NO : . Replace the curtain air bag module (RH) (Refer to P.52B-342).

STEP 4. Check the curtain air bag module (RH) circuit. Resistance measurement at the SRS-ECU connector C-118.

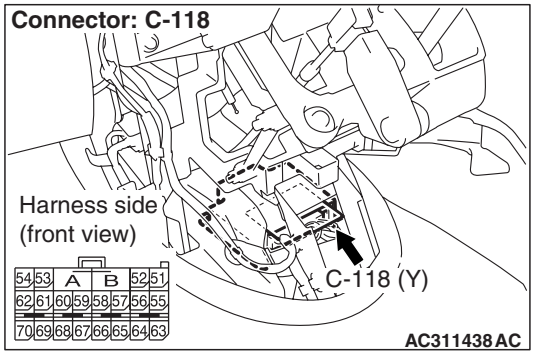

(1) Disconnect SRS-ECU connector C-118.

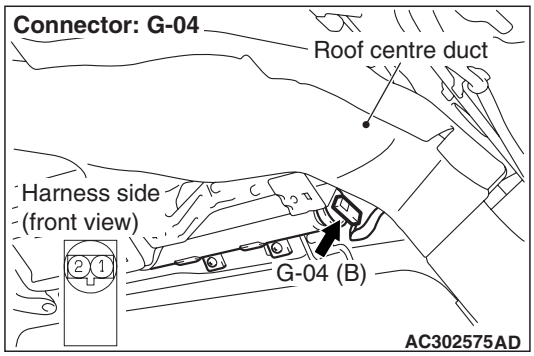

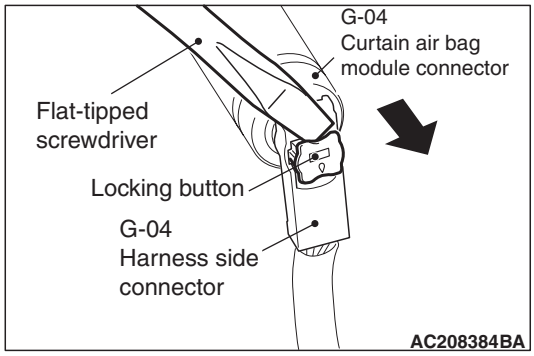

(2) Disconnect curtain air bag module connector G-04. Use a flat-tipped screwdriver to unlock the locking button at the harness side connector by withdrawing it toward you in two stages, and then disconnect the connector.

Main Index
Group TOC

⚠ CAUTION

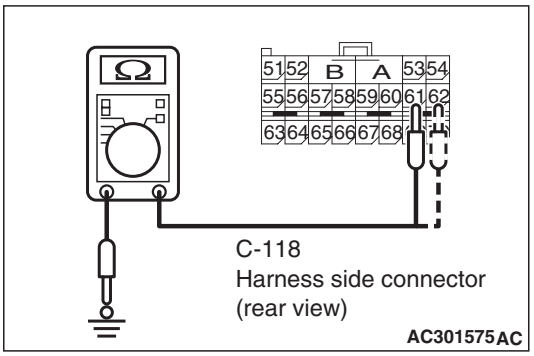

Do not insert a test probe into the terminal from its front side directly as the connector contact pressure may be weakened.

(3) Resistance measurement between C-118 harness side connector terminals 61, 62 and body earth.

OK: Open circuit

Q: Is the check result normal?

YES : Go to Step 5 .

NO : Repair the harness wire between SRS-ECU connector C-118 (terminal No.61and 62) and curtain air bag module (RH) connector G-04 (terminal No.1 and 2).

STEP 5. Check whether the diagnosis code is reset.

Q: Is diagnosis code B1442 set?

YES : Replace the SRS-ECU (Refer to P.52B-332).

NO : An intermittent malfunction is suspected (Refer to GROUP 00, How to Use Troubleshooting/Inspection Service Points P.00-5).

Code No.B1443: Curtain air bag module (squib) (RH) system (short-circuited to the power supply)

Curtain Air Bag Module (Squib) (RH) Circuit

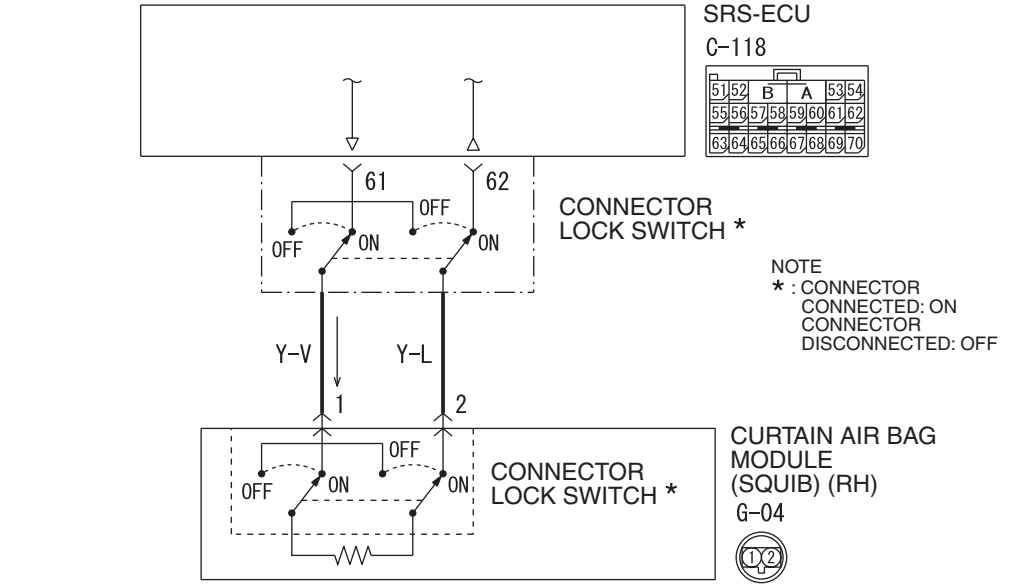

Wire colour code
B : Black LG : Light green G : Green L : Blue W : White Y : Yellow SB : Sky blue
BR : Brown O : Orange GR : Gray R : Red P : Pink V : Violet

W4X52E012A

⚠ CAUTION

If diagnosis code B1443 is set in the SRS-ECU, always diagnose the CAN main bus line.

OPERATION

The SRS-ECU judges how severe a collision is by detecting signals from the side impact sensors and the side air bag safing G-sensor. If the impact is over a predetermined level, the SRS-ECU outputs an ignition signal. At this time, if the side air bag safing G-sensor is on, the curtain air bag module will deploy.

DIAGNOSIS CODE SET CONDITIONS

This diagnosis code is set if the curtain air bag module squib (RH) wire(s) are short-circuited to the power supply.

PROBABLE CAUSES

- Damaged wiring harnesses or connectors
- Short to the power supply in the curtain air bag module (squib) (RH) harness
- Malfunction of the SRS-ECU

DIAGNOSIS PROCEDURE

STEP 1. M.U.T.-III CAN bus diagnostics

Use the M.U.T.-III to diagnose the CAN bus lines.

Q: Is the check result normal?

YES : Go to Step 2 .

NO : Repair the CAN bus line (Refer to GROUP 54F, Diagnosis P.54F-13).

STEP 2. Check whether the diagnosis code is reset.

Check again if the diagnosis code is set.

(1) Erase the diagnosis code.
(2) Ignition: "LOCK" (OFF) position to "ON"
(3) On completion, check that the diagnosis code is not reset.

Q: Is the diagnosis code set?

YES : Go to Step 3 .

NO : There is an intermittent malfunction such as poor engaged connector(s) or open circuit (Refer to GROUP 00, How to Cope with Intermittent Malfunction P.00-5).

STEP 3. Check the curtain air bag module (RH) (M.U.T.-III diagnosis code).

(1) Disconnect the negative battery terminal.

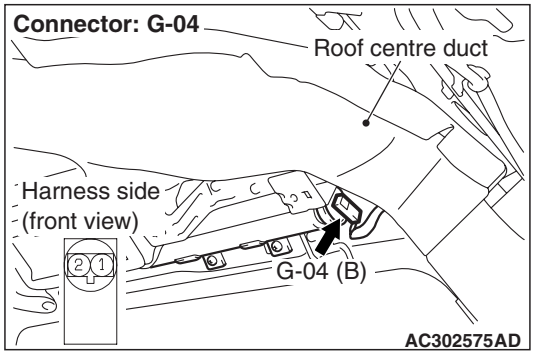

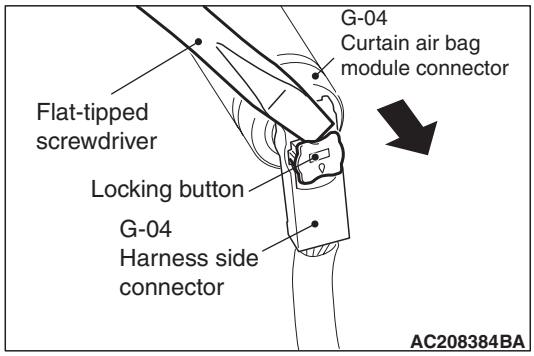

(2) Disconnect curtain air bag module (RH) connector G-04. Use a flat-tipped screwdriver to unlock the locking button at the harness side connector by withdrawing it toward you in two stages, and then disconnect the connector.

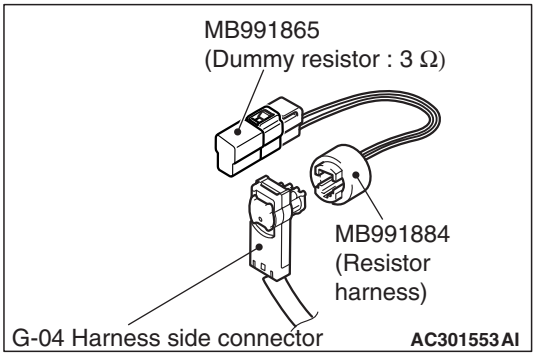

(3) Connect special tool dummy resistor (MB991865) to special tool resistor harness (MB991884).
(4) Connect special tool (MB991884) to the G-04 harness side connector.
(5) Connect the negative battery terminal.
(6) Erase diagnosis code memory, and check the diagnosis code.

Q: Is diagnosis code B1443 set?

YES : Go to Step 4 .

NO : Replace the curtain air bag module (RH) (Refer to P.52B-342).

Main Index
Group TOC

STEP 4. Check the curtain air bag module circuit. Voltage measurement at the SRS-ECU connector C-118.

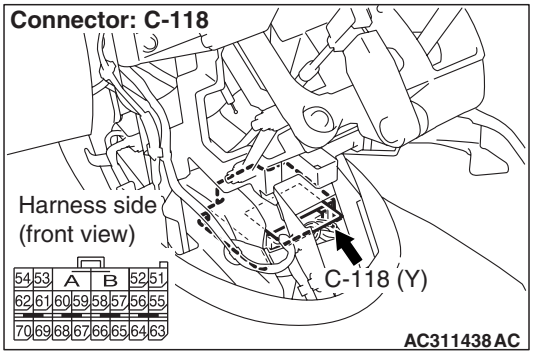

(1) Disconnect SRS-ECU connector C-118.

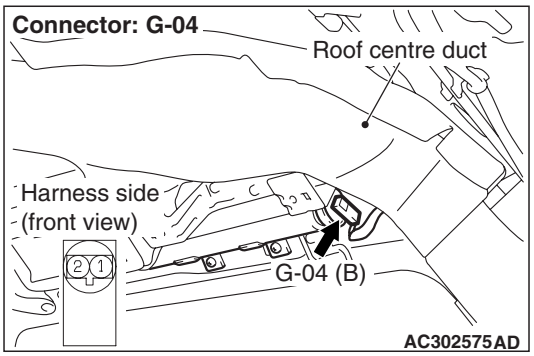

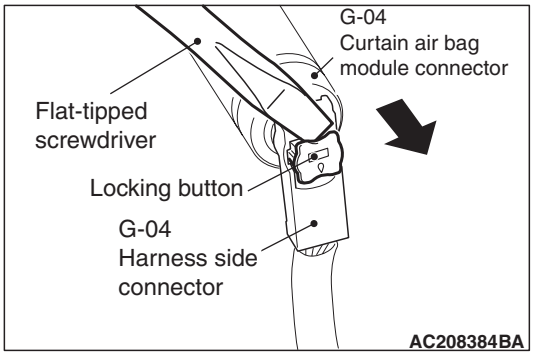

(2) Disconnect curtain air bag module (RH) connector G-04. Use a flat-tipped screwdriver to unlock the locking button at the harness side connector by withdrawing it toward you in two stages, and then disconnect the connector.

(3) Turn the ignition switch to the "ON" position.

⚠ CAUTION

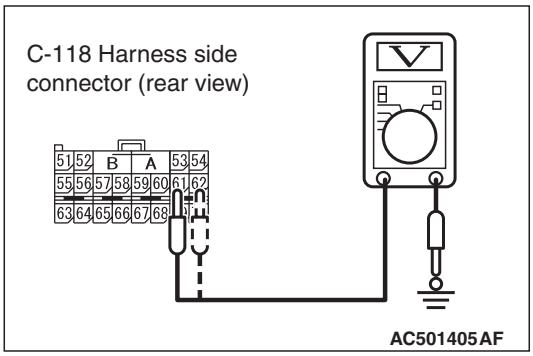

Do not insert a test probe into the terminal from its front side directly as the connector contact pressure may be weakened.

(4) Voltage measurement between C-118 harness side connector terminals 61, 62 and body earth.

OK: 0 V

Q: Is the measured voltage within the specified range?

YES : Go to Step 5 .

NO : Repair the harness wire between SRS-ECU connector C-118 (terminal No.61 and 62) and curtain air bag module (RH) connector G-04 (terminal No.1 and 2).

STEP 5. Check whether the diagnosis code is reset.

Q: Is diagnosis code B1443 set?

YES : Replace the SRS-ECU (Refer to P.52B-332).

NO : An intermittent malfunction is suspected (Refer to GROUP 00, How to Use Troubleshooting/Inspection Service Points P.00-5).

Main Index
Group TOC

Code No. B1446: Side Impact Sensor (Rear) (RH) System for Fault 1
Code No. B1456: Side Impact Sensor (Rear) (LH) System for Fault 1

⚠ CAUTION
If diagnosis code B1446 or B1456 is set in the SRS-ECU, always diagnose the CAN main bus line.

DIAGNOSIS CODE SET CONDITIONS

These diagnosis codes are set if the following conditions are detected from the analog G-sensor inside the side impact sensor output:

- Analogue G-sensor is not operating.
- Analogue G-sensor characteristics are abnormal.
- Analogue G-sensor output is abnormal.

PROBABLE CAUSES

Malfunction of side impact sensor (rear) (RH) (for diagnosis code B1446) and side impact sensor (rear) (LH) (for diagnosis code B1456)

DIAGNOSIS PROCEDURE

STEP 1. M.U.T.-III CAN bus diagnostics
Use the M.U.T.-III to diagnose the CAN bus lines.

Q: Is the check result normal?
YES : Go to Step 2 .
NO : Repair the CAN bus line (Refer to GROUP 54F, Diagnosis P.54F-13).

STEP 2. Check whether the diagnosis code is reset.
Check again if the diagnosis code is set.
(1) Erase the diagnosis code.
(2) Ignition: "LOCK" (OFF) position to "ON"
(3) On completion, check that the diagnosis code is not reset.

Q: Is the diagnosis code set?
YES : Go to Step 3 .
NO : There is an intermittent malfunction such as poor engaged connector(s) or open circuit (Refer to GROUP 00, How to Cope with Intermittent Malfunction P.00-5).

STEP 3. Check the side impact sensor (rear). (M.U.T.-III diagnosis code.)
Replace side impact sensor (rear) (RH) (for diagnosis code B1446) and side impact sensor (rear) (LH) (for diagnosis code B1456) (Refer to P.52B-347).
Check the diagnosis code.

Q: Is either diagnosis code B1446 or B1456 set?
YES : Replace the SRS-ECU (Refer to P.52B-332).
NO : The procedure is complete.

Main Index
Group TOC

Code No.B1447: Side Impact Sensor (Rear) (RH) Power Supply Circuit System

Side Impact Sensor (Rear) (RH) Circuit

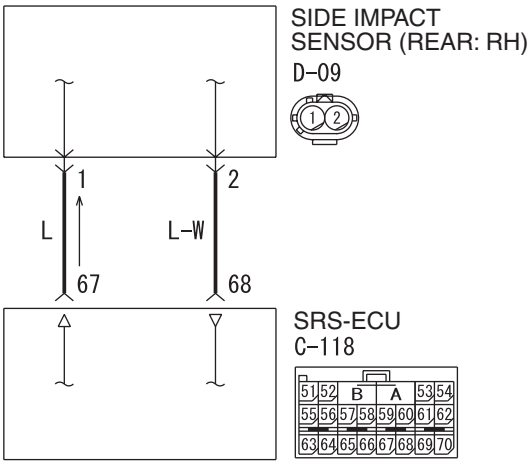

Wire colour code
B : Black LG : Light green G : Green L : Blue W : White Y : Yellow SB : Sky blue
BR : Brown O : Orange GR : Gray R : Red P : Pink V : Violet

W4X52X010A

⚠ CAUTION

If diagnosis code B1447 is set in the SRS-ECU, always diagnose the CAN main bus line.

OPERATION

The side impact sensor includes an analogue G-sensor and CPU, etc. The CPU monitors the analogue G-sensor output signal. If the CPU judges that the curtain air bags should be deployed, it sends a fire signal to the SRS-ECU to deploy the curtain air bags. In addition, the CPU diagnoses the internal components of the side impact sensor. If a malfunction occurs, it requests the SRS-ECU to set a diagnostic trouble code.

DIAGNOSIS CODE SET CONDITIONS

This diagnosis code will set when the power supply voltage to the side impact sensor (rear) (RH) remains less than a predetermined value for five seconds. However, if the system returns to normal condition, code number B1447 will be erased automatically and the SRS warning lamp will go out.

PROBABLE CAUSES

- Damaged wiring harness or connectors
- Malfunction of the side impact sensor (rear) (RH)
- Malfunction of the SRS-ECU

DIAGNOSIS PROCEDURE

STEP 1. M.U.T.-III CAN bus diagnostics

Use the M.U.T.-III to diagnose the CAN bus lines.

Q: Is the check result normal?

YES : Go to Step 2 .

NO : Repair the CAN bus line (Refer to GROUP 54F, Diagnosis P.54F-13).

STEP 2. Check whether the diagnosis code is reset.

Check again if the diagnosis code is set.

(1) Erase the diagnosis code.
(2) Ignition: "LOCK" (OFF) position to "ON"
(3) On completion, check that the diagnosis code is not reset.

Q: Is the diagnosis code set?

YES : Go to Step 3 .

NO : There is an intermittent malfunction such as poor engaged connector(s) or open circuit (Refer to GROUP 00, How to Cope with Intermittent Malfunction P.00-5).

Main Index
Group TOC

STEP 3. Check the harness wires for open circuit or short circuit between SRS-ECU connector C-118 (terminal No.67 and 68) and side impact sensor (rear) (RH) connector D-09 (terminal No.1 and 2).

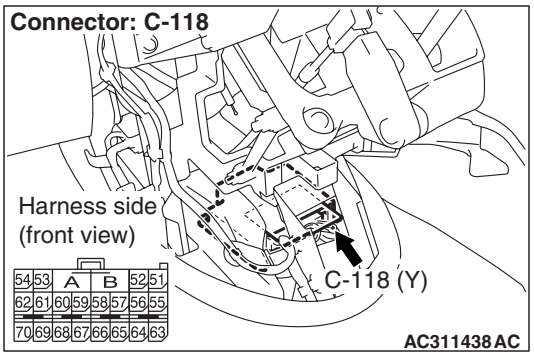

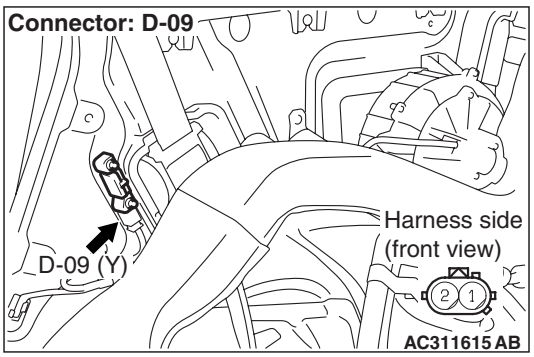

Q: Are the harness wires between SRS-ECU connector C-118 (terminal No.67 and 68) and side impact sensor (rear) (RH) connector D-09 (terminal No.1 and 2) in good condition?

YES : Go to Step 4 .

NO : . Replace the harness wires between SRS-ECU connector C-118 (terminal No.67 and 68) and side impact sensor (rear) (RH) connector D-09 (terminal No.1 and 2).

STEP 4. Check the side impact sensor (rear) (RH) (M.U.T.-III diagnosis code).

(1) Disconnect the negative battery terminal.
(2) Replace the side impact sensor (rear) (RH) with the side impact sensor (rear) (LH).
(3) Connect the negative battery terminal.
(4) Erase diagnosis code from memory, and check the diagnosis code.

Q: Is diagnosis code B1447 set?

YES : Replace the SRS-ECU (Refer to P.52B-332).

NO : Replace the side impact sensor (rear) (RH) with a new one (Refer to P.52B-347). Go to Step 5.

STEP 5. Check whether the diagnosis code is reset.

Q: Is diagnosis code B1447 set?

YES : Replace the SRS-ECU (Refer to P.52B-332).

NO : An intermittent malfunction is suspected (Refer to GROUP 00, How to Use Troubleshooting/Inspection Service Points P.00-5).

Main Index
Group TOC

Code No.B1448: Side Impact Sensor (Rear) (RH) (Squib) for Power Supply Circuit
Code No.B1449: Side Impact Sensor (Rear) (RH) (Squib) for Communication System

Side Impact Sensor (Rear) (RH) Circuit

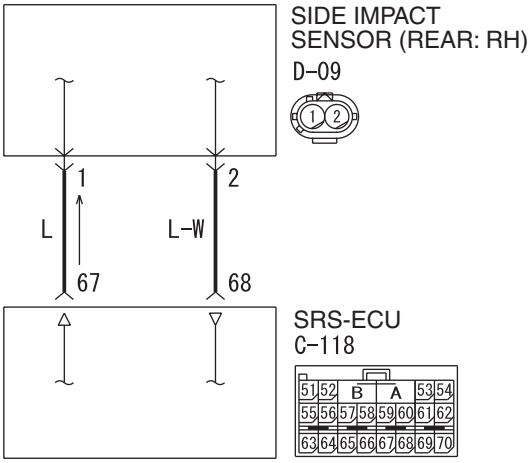

Wire colour code
B : Black LG : Light green G : Green L : Blue W : White Y : Yellow SB : Sky blue
BR : Brown O : Orange GR : Gray R : Red P : Pink V : Violet

W4X52X010A

⚠ CAUTION

If diagnosis code B1448 or B1449 is set in the SRS-ECU, always diagnose the CAN main bus line.

OPERATION

The side impact sensor (rear) includes an analogue G-sensor and CPU, etc. The CPU monitors the analogue G-sensor output signal. If the CPU judges that the curtain air bags should be deployed, it sends a fire signal to the SRS-ECU to deploy the curtain air bags. In addition, the CPU diagnoses the internal components of the side impact sensor (rear). If a malfunction occurs, it requests the SRS-ECU to set a diagnostic trouble code.

DIAGNOSIS CODE SET CONDITIONS

These diagnosis codes are set if communication between the side impact sensor (rear) (RH) and the SRS-ECU is not possible or communication is faulty.

PROBABLE CAUSES

- Damaged wiring harnesses or connectors
- Malfunction of the side impact sensor (rear) (RH)
- Malfunction of the SRS-ECU

DIAGNOSIS PROCEDURE

STEP 1. M.U.T.-III CAN bus diagnostics

Use the M.U.T.-III to diagnose the CAN bus lines.

Q: Is the check result normal?

YES : Go to Step 2 .

NO : Repair the CAN bus line (Refer to GROUP 54F, Diagnosis P.54F-13).

STEP 2. Check whether the diagnosis code is reset.

Check again if the diagnosis code is set.

(1) Erase the diagnosis code.
(2) Ignition: "LOCK" (OFF) position to "ON"
(3) On completion, check that the diagnosis code is not reset.

Q: Is the diagnosis code set?

YES : Go to Step 3 .

NO : There is an intermittent malfunction such as poor engaged connector(s) or open circuit (Refer to GROUP 00, How to Cope with Intermittent Malfunction P.00-5).

STEP 3.Check the side impact sensor (rear) (RH) (M.U.T.-III diagnosis code).

(1) Disconnect the negative battery terminal.
(2) Replace the side impact sensor (Rear) (RH) with the side impact sensor (rear) (LH).
(3) Connect the negative battery terminal.
(4) Erase diagnostic trouble code memory, and check the diagnostic trouble code.

Q: Is DTC B1458 or B1459 set?

YES : Replace the side impact sensor (rear) (RH) with a new one (Refer to P.52B-347). Then go to Step 5 .

NO : Go to Step 4 .

STEP 4. Check the harness wires for open circuit or short circuit between SRS-ECU connector C-118 (terminal No.67 and 68) and side impact sensor (rear) (RH) connector D-09 (terminal No.1 and 2).

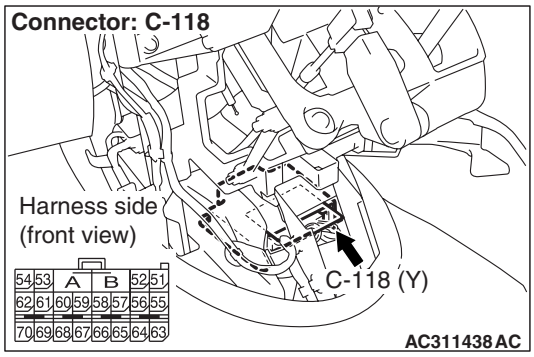

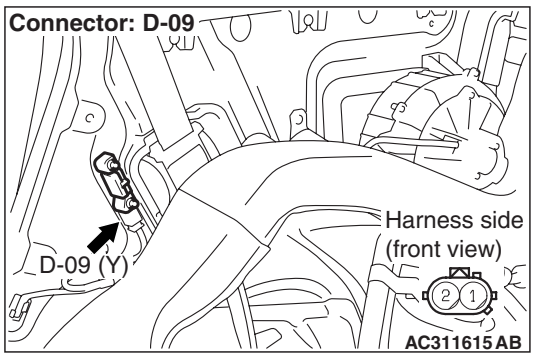

Q: Is the check result normal?

YES : Go to Step 5 .

NO : Repair the harness wires between SRS-ECU connector C-118 (terminal No.67 and 68) and side impact sensor (rear) (RH) connector D-09 (terminal No.1 and 2).

STEP 5. Check whether the diagnosis code is reset.

Q: Is diagnosis code B1448 or B1449 set?

YES : Replace the SRS-ECU (Refer to P.52B-332).

NO : An intermittent malfunction is suspected (Refer to GROUP 00, How to Use Troubleshooting/Inspection Service Points P.00-5).

Main Index
Group TOC

Code No.B1450 Curtain air bag module (squib) (LH) system (short-circuited between terminals of the squib circuit)

Curtain Air Bag Module (Squib) (LH) Circuit

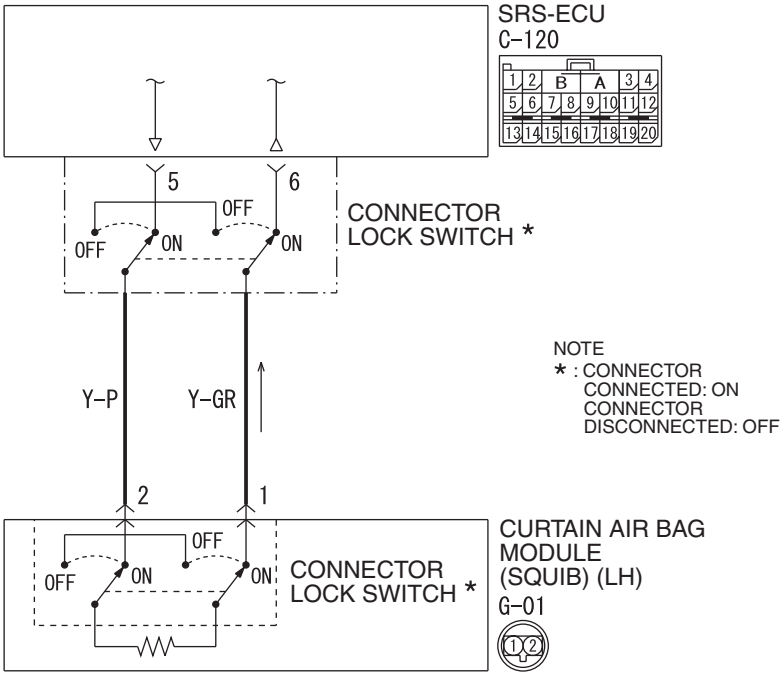

Wire colour code
B : Black LG : Light green G : Green L : Blue W : White Y : Yellow SB : Sky blue
BR : Brown O : Orange GR : Grey R : Red P : Pink V : Violet PU : Purple

W6X52X002A

⚠ CAUTION
If diagnosis code B1450 is set in the SRS-ECU, always diagnose the CAN bus lines.

OPERATION

The SRS-ECU judges how severe a collision is by detecting signals from the side impact sensors and the side-airbag safing G-sensor. If the impact is over a predetermined level, the SRS-ECU outputs an ignition signal. At this time, if the side air bag safing G-sensor is on, the curtain air bag module will deploy.

DIAGNOSIS CODE SET CONDITIONS

This diagnosis code is set if one curtain air bag module squib (LH) wire shorted to the other. However, if no diagnosis code resets, the SRS warning lamp will be switched off (diagnosis code will be retained).

PROBABLE CAUSES

- Improper engaged connector or defective short spring*
- Short circuit between the curtain air bag module (squib) (LH) circuit terminals
- Damaged connector(s)
- Malfunction of the SRS-ECU

*NOTE: *: The squib circuit connectors integrate a "short" spring (which prevents the air bag from deploying unintentionally due to static electricity by shorting the positive wire to the earth wire in the squib circuit when the connectors are disconnected). Therefore, if connector C-120 or G-01 is damaged or improperly engaged, the short spring may not be released when the connector is connected.*

DIAGNOSIS PROCEDURE

STEP 1. M.U.T.-III CAN bus diagnostics
Use the M.U.T.-III to diagnose the CAN bus lines.

Q: Is the check result normal?
YES : Go to Step 2.
NO : Repair the CAN bus line (Refer to GROUP 54F, Diagnosis P.54F-13).

STEP 2. Check whether the diagnosis code is reset.

Check again if the diagnosis code is set.
(1) Erase the diagnosis code.
(2) Ignition: "LOCK" (OFF) position to "ON"
(3) On completion, check that the diagnosis code is not reset.

Q: Is the diagnosis code set?
YES : Go to Step 3.
NO : There is an intermittent malfunction such as poor engaged connector(s) or open circuit (Refer to GROUP 00, How to Cope with Intermittent Malfunction P.00-5).

STEP 3. M.U.T.-III diagnosis code

⚠ CAUTION
To prevent damage to M.U.T.-III, always turn the ignition switch to the "LOCK" (OFF) position before connecting or disconnecting M.U.T.-III.

(1) Turn the ignition switch to the "ON" position.
(2) Check if the diagnosis code is set.
(3) Turn the ignition switch to the "LOOK" (OFF) position.

Q: Is diagnosis code B1519 set?
YES : Go to Step 4.
NO : Go to Step 5.

STEP 4. Connector lock check: SRS-ECU connector C-120 (M.U.T.-III diagnosis code)

(1) Disconnect the negative battery terminal.

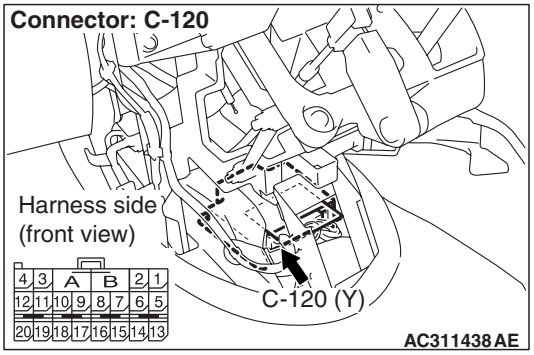

(2) Disconnect connectors C-120, and then reconnect them.
(3) Connector the negative battery terminal.
(4) Erase the diagnosis code memory, and check the diagnosis code.

Q: Is diagnosis code B1450 set?
YES : Go to Step 5.
NO : The procedure is complete. It is assumed that diagnosis code B1450 set as connector C-120 was engaged improperly.

STEP 5. STEP 5. Connector lock check: SRS-ECU connector C-120 and curtain air bag module (LH) connector G-01 (M.U.T.-III diagnosis code).

(1) Disconnect the negative battery terminal.

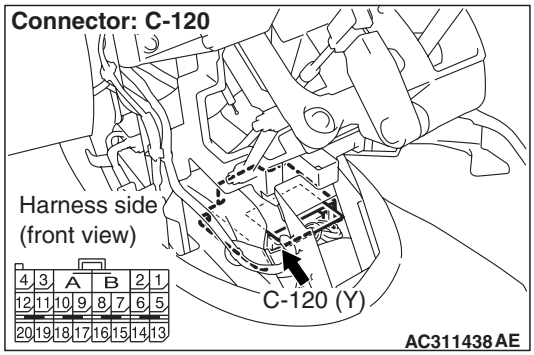

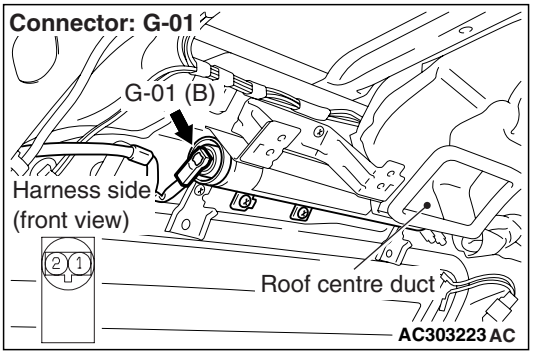

(2) Disconnect connectors C-120 and G-01, and then reconnect them. For connector G-01, use a flat-tipped screwdriver to pull out the locking button at the harness side connector, and then disconnect the connector.
(3) Connector the negative battery terminal.
(4) Erase the diagnosis code memory, and check the diagnosis code.

Q: Is diagnosis code B1450 set?
YES : Go to Step 6.
NO : The procedure is complete. It is assumed that diagnosis code B1450 set as connector C-120 or G-01 was engaged improperly.

Main Index
Group TOC

STEP 6. Check the curtain air bag module (LH). (M.U.T.-III diagnosis code)

(1) Disconnect the negative battery terminal.

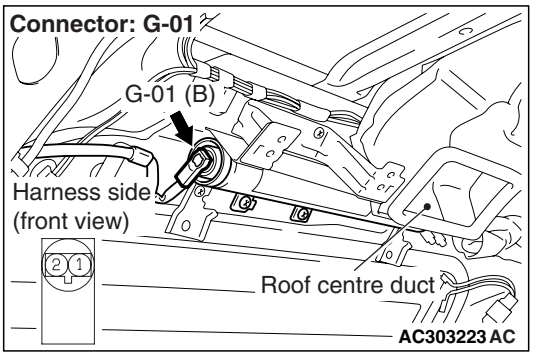

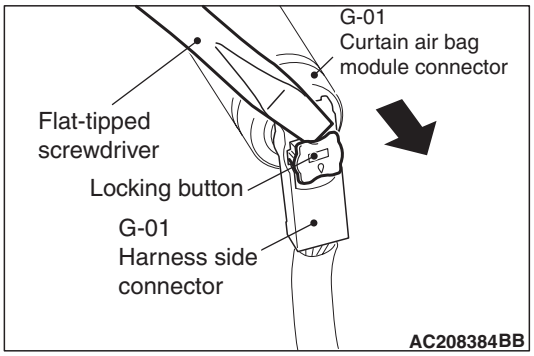

(2) Disconnect curtain air bag module (LH) connector G-01. Use a flat-tipped screwdriver to unlock the locking button at the harness side connector by withdrawing it toward you in two stages, and then disconnect the connector.

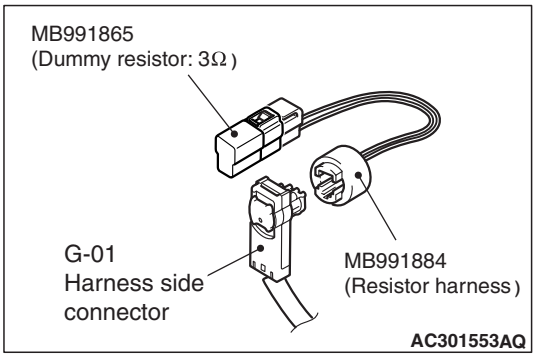

(3) Connect special tool dummy resistor (MB991865) to special tool resistor harness (MB991884).
(4) Connect special tool MB991884 to the G-01 harness side connector.
(5) Connect the negative battery terminal.
(6) Erase diagnosis code memory, and then check the diagnosis code.

Q: Is diagnosis code B1450 set?

YES : Go to Step 7.

NO : Replace the curtain air bag module (LH) (Refer to P.52B-342).

STEP 7. Check the curtain air bag module (LH) circuit. Resistance measurement at the SRS-ECU connector C-120.

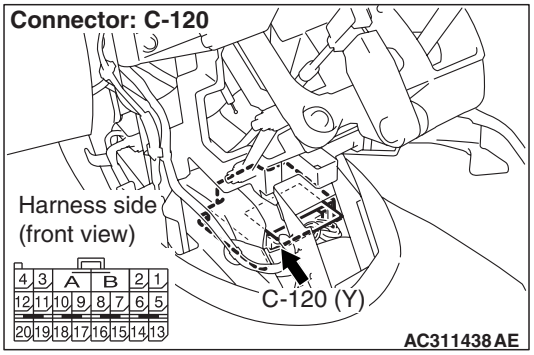

(1) Disconnect SRS-ECU connector C-120.

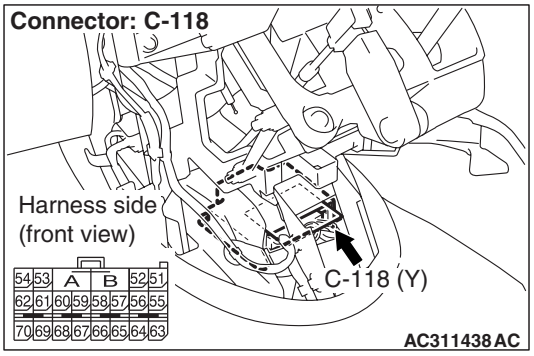

(2) Disconnect SRS-ECU connector C-118.

⚠ *DANGER*

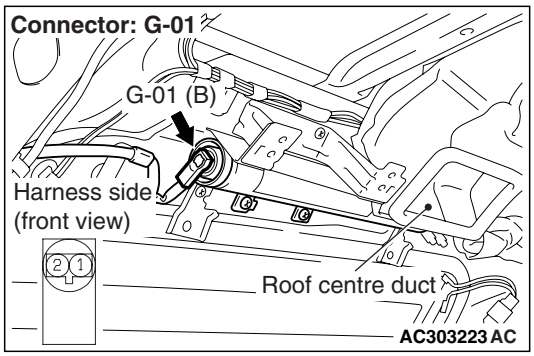

To prevents the air bag from deploying unintentionally, disconnect the curtain air bag module (LH) connector G-01 to short the squib circuit.

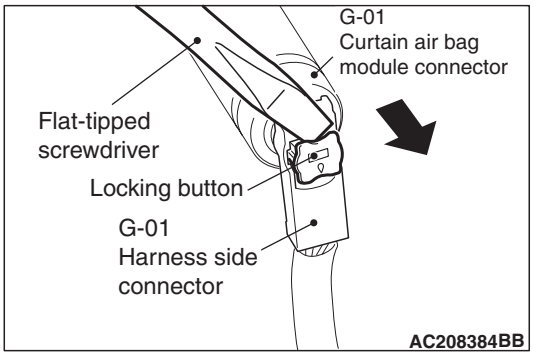

(3) Disconnect curtain air bag module (LH) connector G-01. Use a flat-tipped screwdriver to unlock the locking button at the harness side connector by withdrawing it toward you in two stages, and then disconnect the connector.

⚠ CAUTION

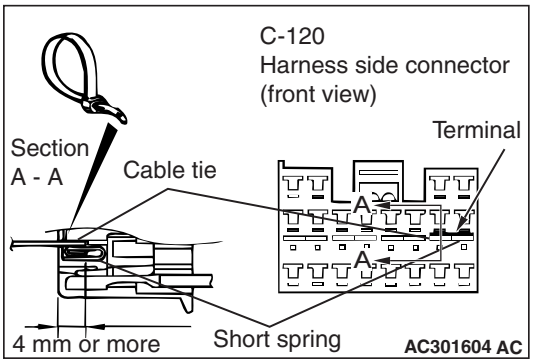

Insert an insulator such as a cable tie to a depth of 4mm or more, otherwise the short spring will not be released.

(4) Insert a cable tie [3 mm wide, 0.5 mm thick] between terminals 5, 6 and the short spring to release the short spring.

⚠ CAUTION

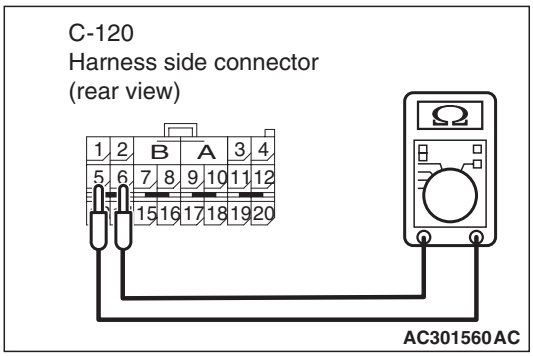

Do not insert a test probe into the terminal from its front side directly as the connector contact pressure may be weakened.

Main Index
Group TOC

(5) Resistance measurement between C-120 harness side connector terminals 5 and 6.

OK: Open circuit

Q: Is the check result normal?

YES : Go to Step 8.

NO : Repair the harness wire between SRS-ECU connector C-120 (terminal No.5 and 6) and intermediate connector G-22 (terminal No.1 and 2).

STEP 8. Check whether the diagnosis code is reset.

Q: Is diagnosis code B1450 set?

YES : Replace the SRS-ECU. (Refer toP.52B-332).

NO : The procedure is complete. If no malfunctions are found in all steps, an intermittent malfunction is suspected (Refer to GROUP 00, How to Use Troubleshooting/Inspection Service Points P.00-5).

Code No.B1451: Curtain air bag module (squib) (LH) system (open-circuited in the squib circuit)

Curtain Air Bag Module (Squib) (LH) Circuit

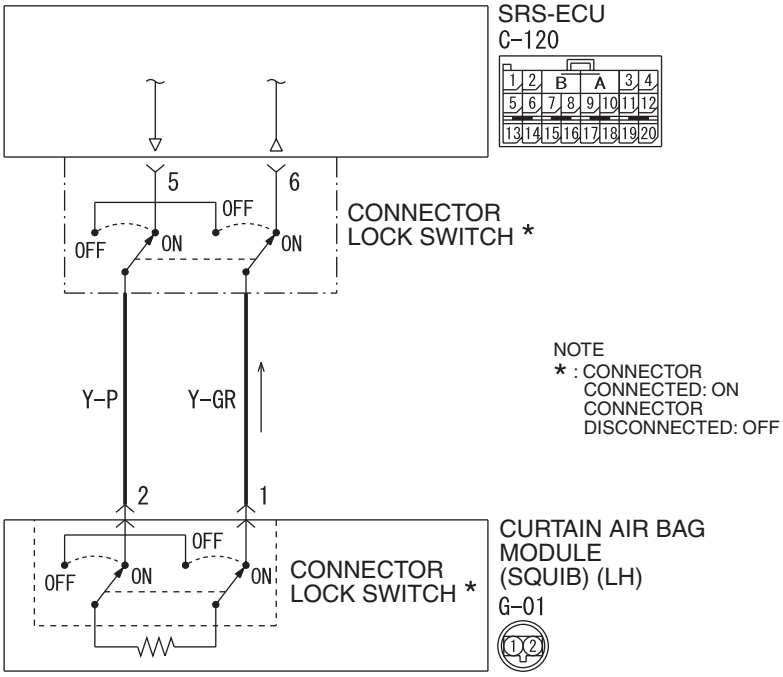

Wire colour code
B : Black LG : Light green G : Green L : Blue W : White Y : Yellow SB : Sky blue
BR : Brown O : Orange GR : Grey R : Red P : Pink V : Violet PU : Purple

W6X52X002A

⚠ CAUTION

If diagnosis code B1451 is set in the SRS-ECU, always diagnose the CAN main bus line.

OPERATION

The SRS-ECU judges how severe a collision is by detecting signals from the side impact sensors and the side air bag safing G-sensor. If the impact is over a predetermined level, the SRS-ECU outputs an ignition signal. At this time, if the side air bag safing G-sensor is on, the curtain air bag module will deploy.

DIAGNOSIS CODE SET CONDITIONS

This diagnosis code is set if curtain air bag module squib (LH) wire(s) are open-circuited. However, if no diagnosis code resets, the SRS warning lamp will be switched off (diagnosis code will be retained).

PROBABLE CAUSES

- Improper connector contact
- Open circuit in the curtain air bag module (squib) (LH) circuit
- Malfunction of the SRS-ECU

DIAGNOSIS PROCEDURE

STEP 1. M.U.T.-III CAN bus diagnostics

Use the M.U.T.-III to diagnose the CAN bus lines.

Q: Is the check result normal?

YES : Go to Step 2.

NO : Repair the CAN bus line (Refer to GROUP 54F, Diagnosis P.54F-13).

STEP 2. Check whether the diagnosis code is reset.

Check again if the diagnosis code is set.

(1) Erase the diagnosis code.
(2) Ignition: "LOCK" (OFF) position to "ON"
(3) On completion, check that the diagnosis code is not reset.

Q: Is the diagnosis code set?

YES : Go to Step 3.

NO : There is an intermittent malfunction such as poor engaged connector(s) or open circuit (Refer to GROUP 00, How to Cope with Intermittent Malfunction P.00-5).

STEP 3. Check the curtain air bag module (LH) (M.U.T.-III diagnosis code).

(1) Disconnect the negative battery terminal.

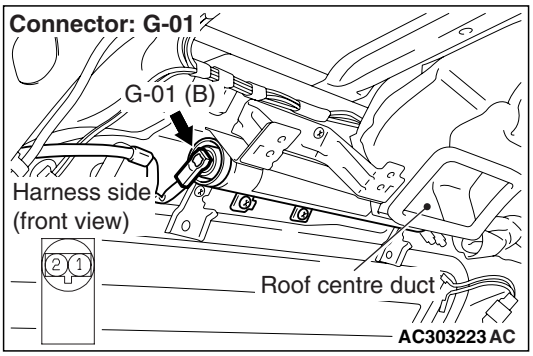

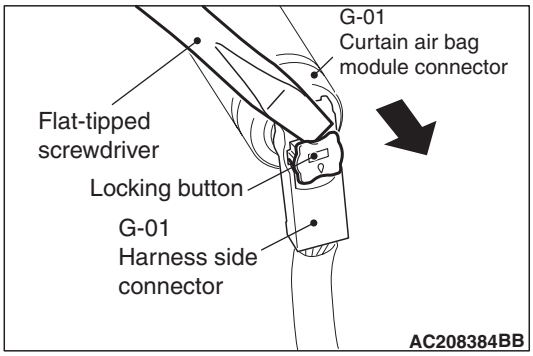

(2) Disconnect curtain air bag module (LH) connector G-01. Use a flat-tipped screwdriver to unlock the locking button at the harness side connector by withdrawing it toward you in two stages, and then disconnect the connector.

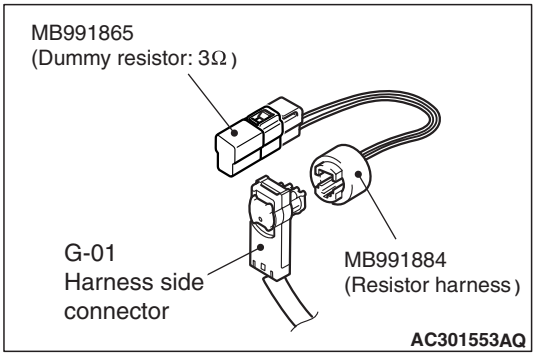

(3) Connect special tool dummy resistor (MB991865) to special tool resistor harness (MB991884).
(4) Connect special tool MB991884 to the G-01 harness side connector.
(5) Connect the negative battery terminal.
(6) Erase diagnosis code memory, and then check the diagnosis code.

Q: Is diagnosis code B1451 set?

YES : Go to Step 4.

NO : Replace the curtain air bag module (LH) (Refer to P.52B-342).

Main Index
Group TOC

STEP 4. Resistance measurement between SRS-ECU connector C-120 (terminal No.5 and 6) and the curtain air bag module (LH) connector G-01 (terminal No.2 and 1)

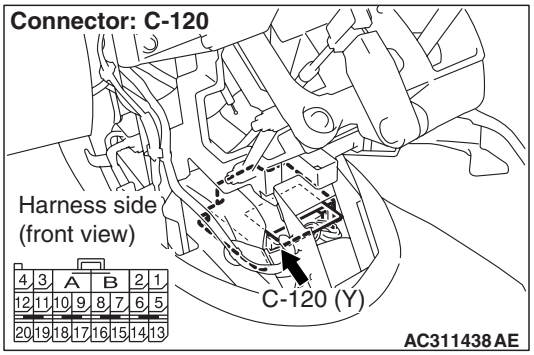

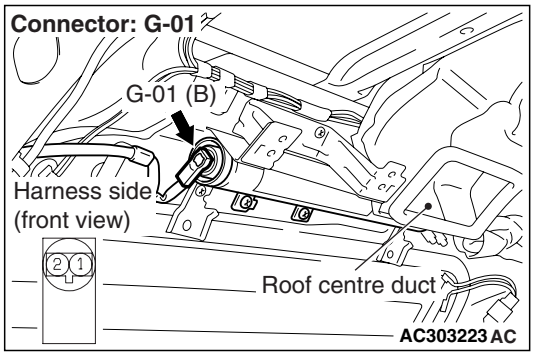

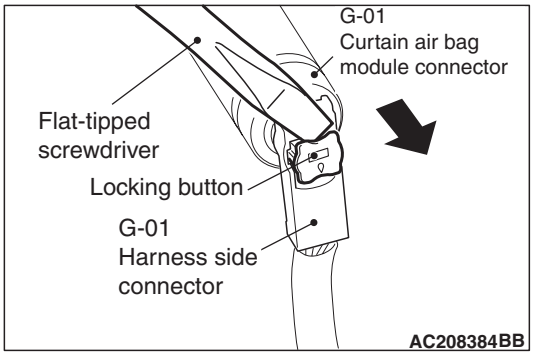

(1) Disconnect SRS-ECU connector C-120 and curtain air bag module (LH) connector G-01, and measure at the wiring harness side. For connector G-01, use a flat-tipped screwdriver to unlock the locking button at the harness side connector by withdrawing it toward you in two stages, and then disconnect the connector.

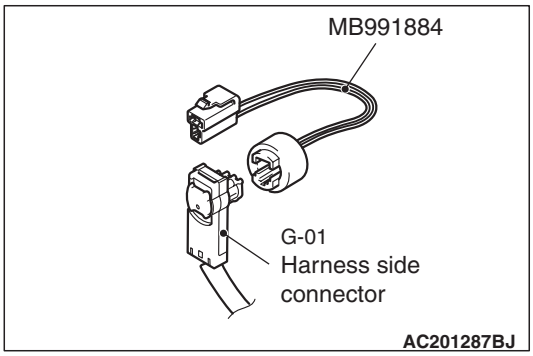

(2) Connect G-01 harness side connector to special tool resistor harness (MB991884).

⚠ CAUTION

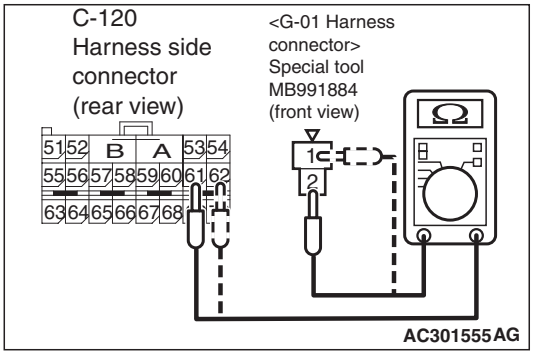

Do not insert a test probe into the terminal from its front side directly as the connector contact pressure may be weakened.

(3) Resistance measurement between the following terminals.
- SRS-ECU connector C-120 terminal No.5 and special tool terminal No.1
- SRS-ECU connector C-120 terminal No.6 and special tool terminal No.2

OK: Less than 2 Ω

Q: Are the check results normal?

YES : Go to Step 5.

NO : Repair the harness wire between SRS-ECU connector C-120 (terminal No.5 and 6) and curtain air bag module (LH) connector G-01 (terminal No.2 and 1).

STEP 5. Check whether the diagnosis code is reset.

Q: Is diagnosis code No.B1451 set?

YES : Replace the SRS-ECU (Refer to P.52B-332).

NO : An intermittent malfunction is suspected (Refer to GROUP 00, How to Use Troubleshooting/Inspection Service Points P.00-5).

Main Index
Group TOC

Code No.B1452: Curtain air bag module (squib) (LH) system (short-circuited to the earth)

Curtain Air Bag Module (Squib) (LH) Circuit

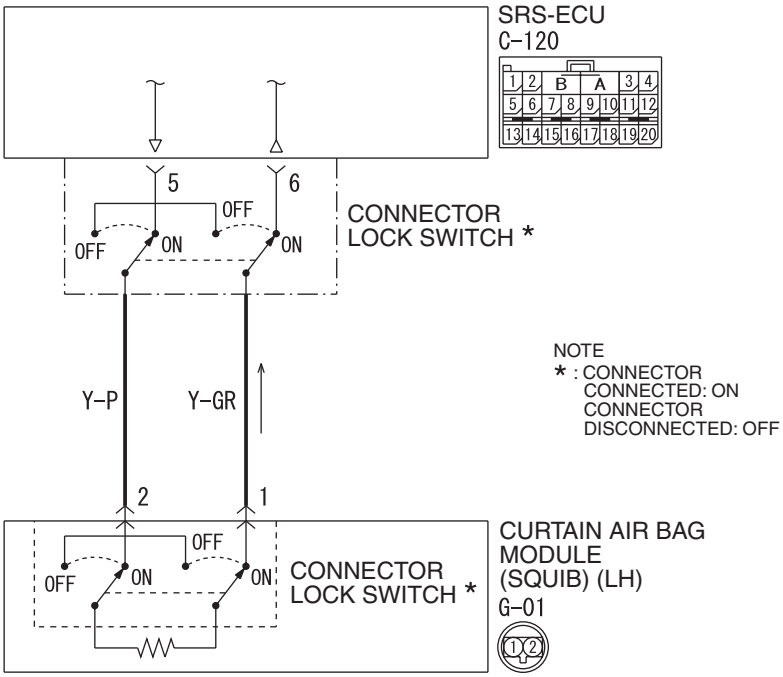

Wire colour code
B : Black LG : Light green G : Green L : Blue W : White Y : Yellow SB : Sky blue
BR : Brown O : Orange GR : Grey R : Red P : Pink V : Violet PU : Purple

W6X52X002A

⚠ CAUTION

If diagnosis code B1452 is set in the SRS-ECU, always diagnose the CAN main bus line.

OPERATION

The SRS-ECU judges how severe a collision is by detecting signals from the side impact sensors and the side air bag safing G-sensor. If the impact is over a predetermined level, the SRS-ECU outputs an ignition signal. At this time, if the side air bag safing G-sensor is on, the curtain air bag module will deploy.

DIAGNOSIS CODE SET CONDITIONS

This diagnosis code is set if the curtain air bag module squib (LH) wire(s) are short-circuited to the earth.

PROBABLE CAUSES

- Damaged wiring harnesses or connectors
- Short to the earth in the curtain air bag module (squib) (LH) harness
- Malfunction of the SRS-ECU

DIAGNOSTIC PROCEDURE

STEP 1. M.U.T.-III CAN bus diagnostics

Use the M.U.T.-III to diagnose the CAN bus lines.

Q: Is the check result normal?

YES : Go to Step 2.

NO : Repair the CAN bus line (Refer to GROUP 54F, Diagnosis P.54F-13).

STEP 2. Check whether the diagnosis code is reset.

Check again if the diagnosis code is set.

(1) Erase the diagnosis code.
(2) Ignition: "LOCK" (OFF) position to "ON"
(3) On completion, check that the diagnosis code is not reset.

Q: Is the diagnosis code set?

YES : Go to Step 3.

NO : There is an intermittent malfunction such as poor engaged connector(s) or open circuit (Refer to GROUP 00, How to Cope with Intermittent Malfunction P.00-5).

STEP 3. Check the curtain air bag module (LH) (M.U.T.-III diagnosis code).

(1) Disconnect the negative battery terminal.

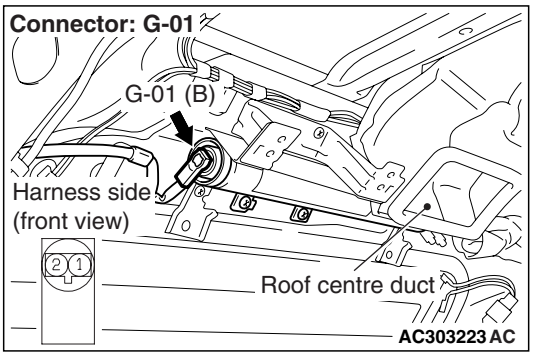

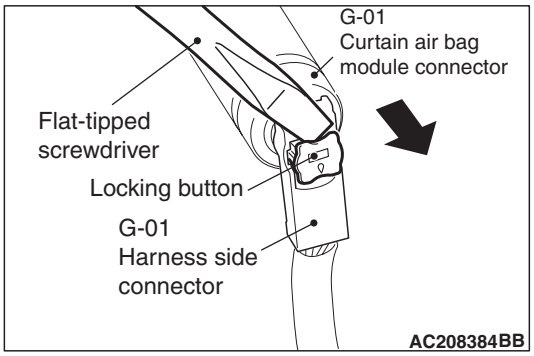

(2) Disconnect curtain air bag module connector G-01. Use a flat-tipped screwdriver to unlock the locking button at the harness side connector by withdrawing it toward you in two stages, and then disconnect the connector.

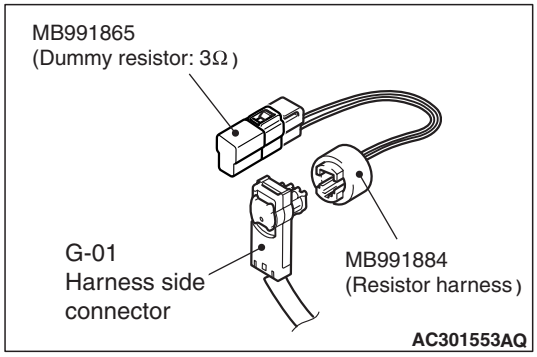

(3) Connect special tool dummy resistor (MB991865) to special tool resistor harness (MB991884).
(4) Connect special tool (MB991884) to the G-01 harness side connector.
(5) Connect the negative battery terminal.
(6) Erase diagnosis code memory, and check the diagnosis code.

Q: Is diagnosis code B1452 set?

YES : . Go to Step 4.

NO : . Replace the curtain air bag module (LH) (Refer to P.52B-342).

STEP 4. Check the curtain air bag module (LH) circuit. Resistance measurement at the SRS-ECU connector C-120.

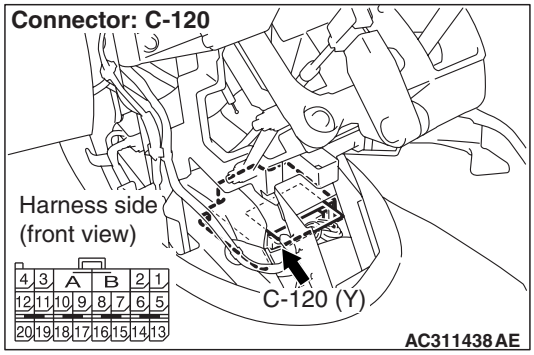

(1) Disconnect SRS-ECU connector C-120.

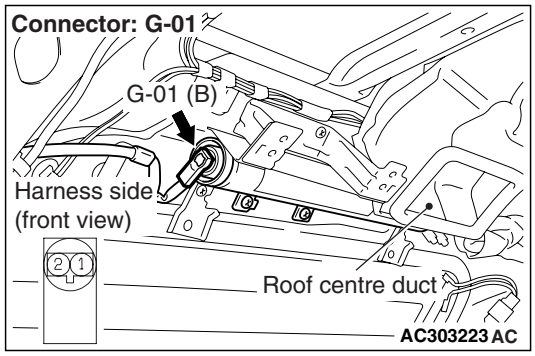

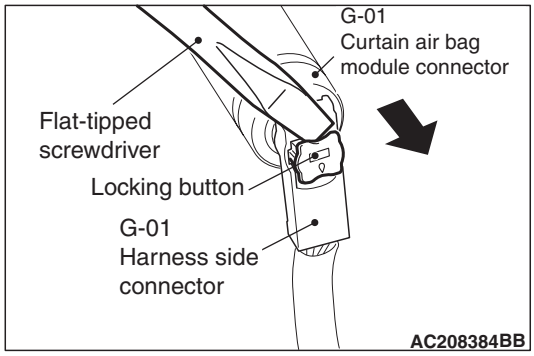

(2) Disconnect curtain air bag module connector G-01. Use a flat-tipped screwdriver to unlock the locking button at the harness side connector by withdrawing it toward you in two stages, and then disconnect the connector.

Main Index
Group TOC

⚠ CAUTION

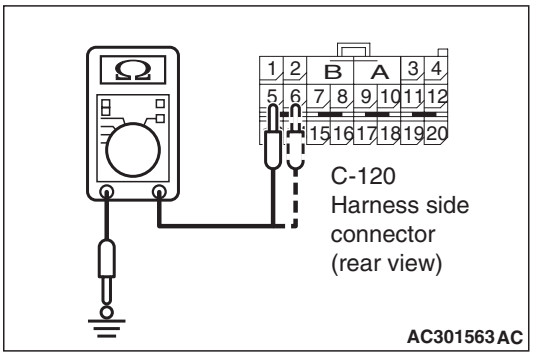

Do not insert a test probe into the terminal from its front side directly as the connector contact pressure may be weakened.

(3) Resistance measurement between C-120 harness side connector terminals 5, 6 and body earth.

OK: Open circuit

Q: Is the check result normal?

YES : Go to Step 5.

NO : Repair the harness wire between SRS-ECU connector C-120 (terminal No.5 and 6) and intermediate connector G-22 (floor harness side, terminal No.1 and 2).

STEP 5. Check whether the diagnosis code is reset.

Q: Is diagnosis code B1452 set?

YES : Replace the SRS-ECU (Refer to P.52B-332).

NO : An intermittent malfunction is suspected (Refer to GROUP 00, How to Use Troubleshooting/Inspection Service Points P.00-5).

Code No.B1453: Curtain air bag module (squib) (LH) system (short-circuited to the power supply)

Curtain Air Bag Module (Squib) (LH) Circuit

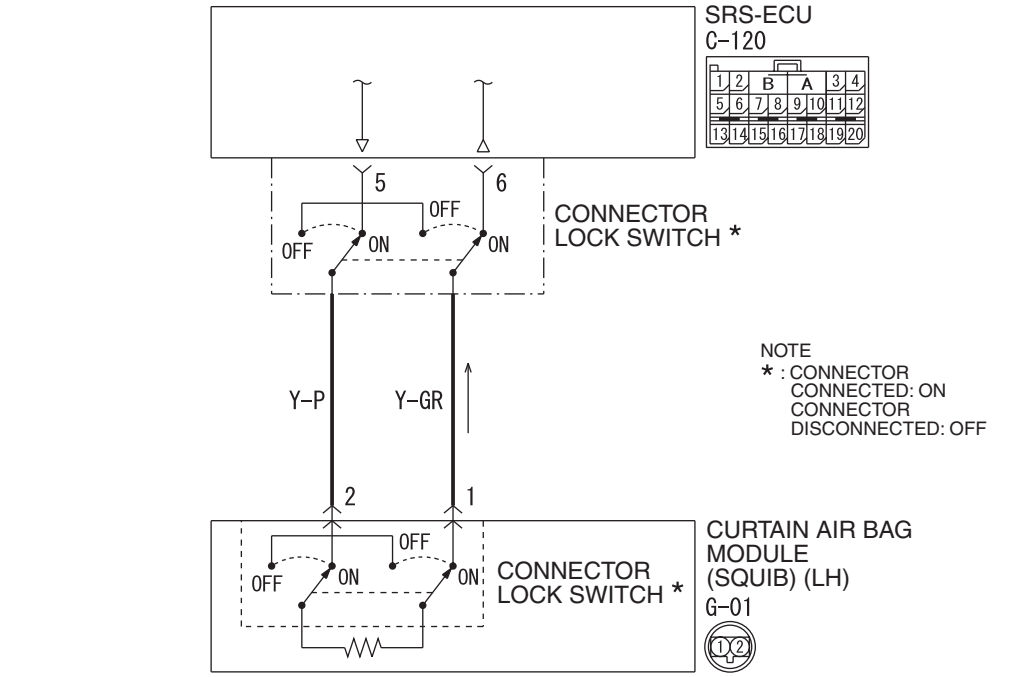

Wire colour code
B : Black LG : Light green G : Green L : Blue W : White Y : Yellow SB : Sky blue
BR : Brown O : Orange GR : Grey R : Red P : Pink V : Violet PU : Purple

W6X52X002A

⚠ CAUTION

If diagnosis code B1453 is set in the SRS-ECU, always diagnose the CAN main bus line.

OPERATION

The SRS-ECU judges how severe a collision is by detecting signals from the side impact sensors and the side air bag safing G-sensor. If the impact is over a predetermined level, the SRS-ECU outputs an ignition signal. At this time, if the side air bag safing G-sensor is on, the curtain air bag module will deploy.

DIAGNOSIS CODE SET CONDITIONS

This diagnosis code is set if the curtain air bag module squib (LH) wire(s) are short-circuited to the power supply.

PROBABLE CAUSES

- Damaged wiring harnesses or connectors
- Short to the power supply in the curtain air bag module (squib) (LH) harness
- Malfunction of the SRS-ECU

DIAGNOSIS PROCEDURE

STEP 1. M.U.T.-III CAN bus diagnostics

Use the M.U.T.-III to diagnose the CAN bus lines.

Q: Is the check result normal?

YES : Go to Step 2.

NO : Repair the CAN bus line (Refer to GROUP 54F, Diagnosis P.54F-13).

STEP 2. Check whether the diagnosis code is reset.

Check again if the diagnosis code is set.

(1) Erase the diagnosis code.
(2) Ignition: "LOCK" (OFF) position to "ON"
(3) On completion, check that the diagnosis code is not reset.

Q: Is the diagnosis code set?

YES : Go to Step 3.

NO : There is an intermittent malfunction such as poor engaged connector(s) or open circuit (Refer to GROUP 00, How to Cope with Intermittent Malfunction P.00-5).

STEP 3. Check the curtain air bag module (LH) (M.U.T.-III diagnosis code).

(1) Disconnect the negative battery terminal.

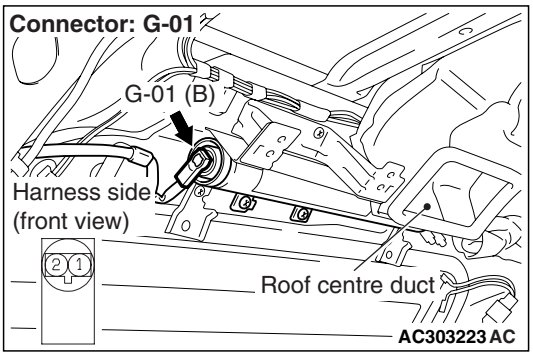

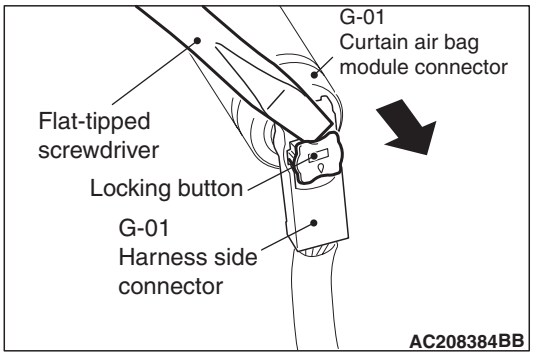

(2) Disconnect curtain air bag module (LH) connector G-01. Use a flat-tipped screwdriver to unlock the locking button at the harness side connector by withdrawing it toward you in two stages, and then disconnect the connector.

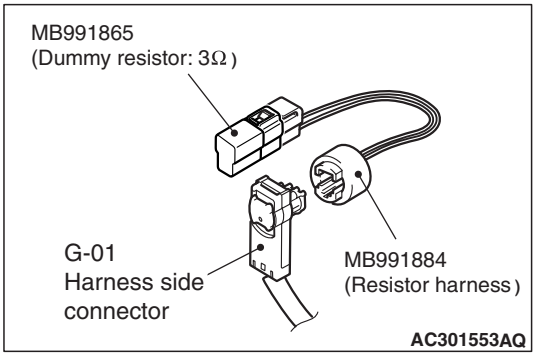

(3) Connect special tool dummy resistor (MB991865) to special tool resistor harness (MB991884).
(4) Connect special tool (MB991884) to the G-01 harness side connector.
(5) Connect the negative battery terminal.
(6) Erase diagnosis code memory, and check the diagnosis code.

Q: Is diagnosis code B1453 set?

YES : Go to Step 4.

NO : Replace the curtain air bag module (LH) (Refer to P.52B-342).

STEP 4. Check the curtain air bag module circuit. Voltage measurement at the SRS-ECU connector C-120.

(1) Disconnect the negative battery terminal.

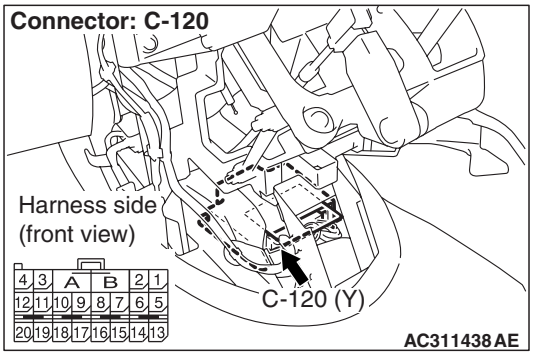

(2) Disconnect SRS-ECU connector C-120.

(3) Turn the ignition switch to the "ON" position.

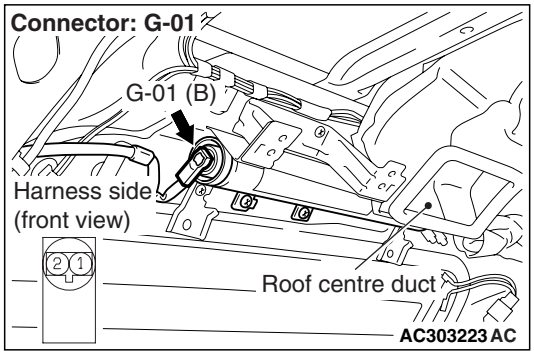

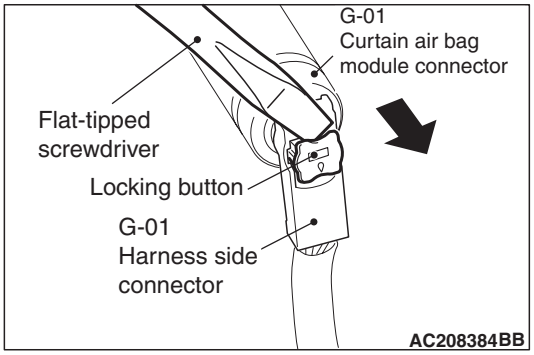

(4) Disconnect curtain air bag module (LH) connector G-01. Use a flat-tipped screwdriver to unlock the locking button at the harness side connector by withdrawing it toward you in two stages, and then disconnect the connector.

(5) Turn the ignition switch to the "ON" position.

⚠ CAUTION

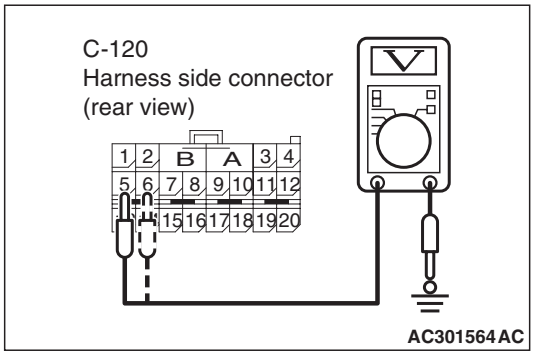

Do not insert a test probe into the terminal from its front side directly as the connector contact pressure may be weakened.

(6) Voltage measurement between C-120 harness side connector terminals 5, 6 and body earth.

OK: 0 V

Q: Is the measured voltage within the specified range?

YES : Go to Step 5.

NO : Repair the harness wire between SRS-ECU connector C-120 (terminal No.5 and 6) and the curtain air bag module (LH) connector G-01 (floor harness side, terminal No.2 and 1).

STEP 5. Check whether the diagnosis code is reset.

Q: Is diagnosis code B1453 set?

YES : Replace the SRS-ECU (Refer to P.52B-332).

NO : An intermittent malfunction is suspected (Refer to GROUP 00, How to Use Troubleshooting/Inspection Service Points P.00-5).

Main Index
Group TOC

Code No.B1457: Side Impact Sensor (Rear) (LH) Power Supply Circuit System

Side Impact Sensor (Rear) (LH) Circuit

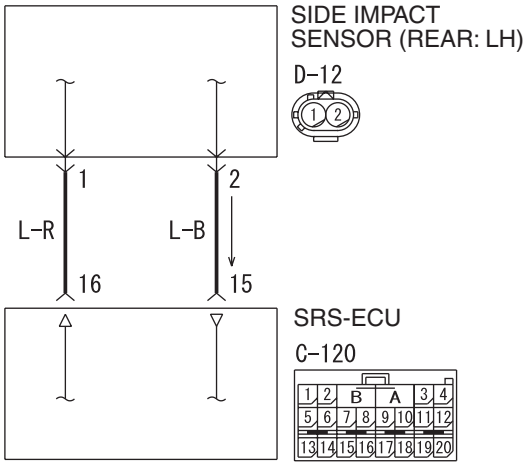

Wire colour code
B : Black LG : Light green G : Green L : Blue W : White Y : Yellow SB : Sky blue
BR : Brown O : Orange GR : Gray R : Red P : Pink V : Violet

W4X52E008A

⚠ CAUTION

If diagnosis code B1457 is set in the SRS-ECU, always diagnose the CAN main bus line.

OPERATION

The side impact sensor includes an analogue G-sensor and CPU, etc. The CPU monitors the analogue G-sensor output signal. If the CPU judges that the curtain air bags should be deployed, it sends a fire signal to the SRS-ECU to deploy the curtain air bags. In addition, the CPU diagnoses the internal components of the side impact sensor. If a malfunction occurs, it requests the SRS-ECU to set a diagnosis code.

DIAGNOSIS CODE SET CONDITIONS

This diagnosis code will set when the power supply voltage to the side impact sensor (rear) (RH) remains less than a predetermined value for five seconds. However, if the system returns to normal condition, code number B1457 will be erased automatically and the SRS warning lamp will go out.

PROBABLE CAUSES

- Damaged wiring harness or connectors
- Malfunction of the side impact sensor (rear) (LH)
- Malfunction of the SRS-ECU

DIAGNOSIS PROCEDURE

STEP 1. M.U.T.-III CAN bus diagnostics

Use the M.U.T.-III to diagnose the CAN bus lines.

Q: Is the check result normal?

YES : Go to Step 2 .

NO : Repair the CAN bus line (Refer to GROUP 54F, Diagnosis P.54F-13).

STEP 2. Check whether the diagnosis code is reset.

Check again if the diagnosis code is set.

(1) Erase the diagnosis code.
(2) Ignition: "LOCK" (OFF) position to "ON"
(3) On completion, check that the diagnosis code is not reset.

Q: Is the diagnosis code set?

YES : Go to Step 3 .

NO : There is an intermittent malfunction such as poor engaged connector(s) or open circuit (Refer to GROUP 00, How to Cope with Intermittent Malfunction P.00-5).

Main Index
Group TOC

STEP 3. Check the harness wires for open circuit or short circuit between SRS-ECU connector C-120 (terminal No.15 and 16) and side impact sensor (rear) (LH) connector D-12 (terminal No.1 and 2).

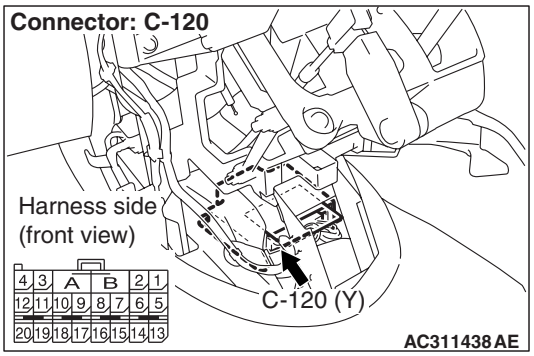

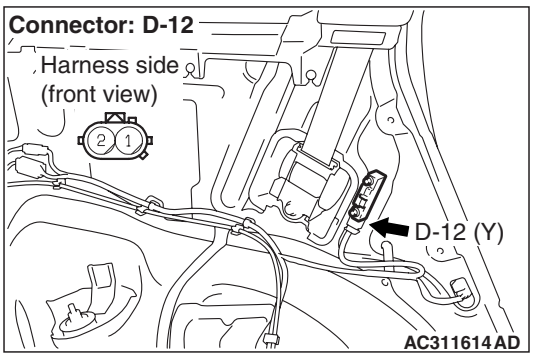

Q: Are the harness wires between SRS-ECU connector C-120 (terminal No.15 and 16) and side impact sensor (rear) (LH) connector D-12 (terminal No.1 and 2) in good condition?

YES : Go to Step 4 .

NO : . Replace the harness wires between SRS-ECU connector C-120 (terminal No.15 and 16) and side impact sensor (rear) (LH) connector D-12 (terminal No.1 and 2).

STEP 4. Check the side impact sensor (rear) (LH) (M.U.T.-III diagnosis code).

(1) Disconnect the negative battery terminal.
(2) Replace the side impact sensor (rear) (LH) with the side impact sensor (rear) (RH).
(3) Connect the negative battery terminal.
(4) Erase diagnosis code from memory, and check the diagnosis code.

Q: Is diagnosis code B1457 set?

YES : Replace the SRS-ECU (Refer to P.52B-332).

NO : Replace the side impact sensor (rear) (LH) with a new one (Refer to P.52B-347). Go to Step 5.

STEP 5. Check whether the diagnosis code is reset.

Q: Is diagnosis code B1457 set?

YES : Replace the SRS-ECU (Refer to P.52B-332).

NO : An intermittent malfunction is suspected (Refer to GROUP 00, How to Use Troubleshooting/Inspection Service Points P.00-5).

Main Index
Group TOC

Code No.B1458: Side Impact sensor (Rear) (LH) (Squib) for Power Supply Circuit
Code No.B1459: Side Impact sensor (Rear) (LH) (Squib) or Communication System

Side Impact Sensor (Rear) (LH) Circuit

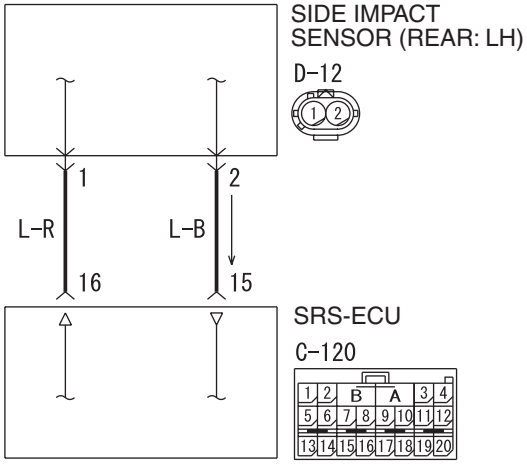

Wire colour code
B : Black LG : Light green G : Green L : Blue W : White Y : Yellow SB : Sky blue
BR : Brown O : Orange GR : Gray R : Red P : Pink V : Violet

W4X52E008A

⚠ CAUTION
If diagnosis code B1458 or B1459 is set in the SRS-ECU, always diagnose the CAN main bus line.

OPERATION

The side impact sensor includes an analogue G-sensor and CPU, etc. The CPU monitors the analogue G-sensor output signal. If the CPU judges that the curtain air bags should be deployed, it sends a fire signal to the SRS-ECU to deploy the curtain air bags. In addition, the CPU diagnoses the internal components of the side impact sensor. If a malfunction occurs, it requests the SRS-ECU to set a diagnosis code.

DIAGNOSIS CODE SET CONDITIONS

These diagnosis codes are set if communication between the side impact sensor (rear) (LH) and the SRS-ECU is not possible or communication is faulty.

PROBABLE CAUSES

- Damaged wiring harnesses or connectors
- Malfunction of the side impact sensor (rear) (LH)
- Malfunction of the SRS-ECU

DIAGNOSIS PROCEDURE

STEP 1. M.U.T.-III CAN bus diagnostics

Use the M.U.T.-III to diagnose the CAN bus lines.

Q: Is the check result normal?
YES : Go to Step 2 .
NO : Repair the CAN bus line (Refer to GROUP 54F, Diagnosis P.54F-13).

STEP 2. Check whether the diagnosis code is reset.

Check again if the diagnosis code is set.
(1) Erase the diagnosis code.
(2) Ignition: "LOCK" (OFF) position to "ON"
(3) On completion, check that the diagnosis code is not reset.

Q: Is the diagnosis code set?
YES : Go to Step 3 .
NO : There is an intermittent malfunction such as poor engaged connector(s) or open circuit (Refer to GROUP 00, How to Cope with Intermittent Malfunction P.00-5).

STEP 3.Check the side impact sensor (rear) (LH) (M.U.T.-III diagnosis code).

(1) Disconnect the negative battery terminal.
(2) Replace the side impact sensor (rear) (LH) with the side impact sensor (rear) (RH).
(3) Connect the negative battery terminal.
(4) Erase diagnosis code memory, and check the diagnosis code.

Q: Is diagnosis code B1458 or B1459 set?

YES : Replace the side impact sensor (rear) (LH) with a new one (Refer to P.52B-347). Then go to Step 5 .

NO : Go to Step 4 .

STEP 4. Check the harness wires for open circuit or short circuit between SRS-ECU connector C-120 (terminal No.15 and 16) and side impact sensor (rear) (LH) connector D-12 (terminal No.1 and 2).

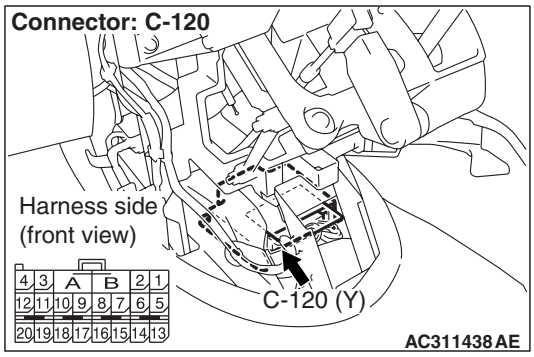

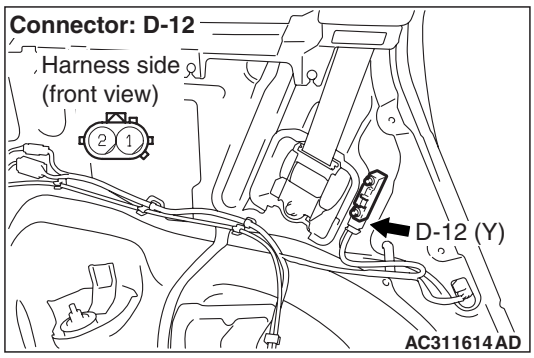

Q: Is the check result normal?

YES : Go to Step 5 .

NO : Repair the harness wires between SRS-ECU connector C-120 (terminal No.15 and 16) and side impact sensor (rear) (LH) connector D-12 (terminal No.1 and 2).

STEP 5. Check whether the diagnosis code is reset.

Q: Is diagnosis code B1458 or B1459 set?

YES : Replace the SRS-ECU (Refer to P.52B-332).

NO : An intermittent malfunction is suspected (Refer to GROUP 00, How to Use Troubleshooting/Inspection Service Points P.00-5).

Main Index
Group TOC

Code No.B1460: Seat Belt Pre-Tensioner (RH) (Squib) System Fault 1 (Short Circuit between Terminals of the Squib Circuit)

Seat Belt Pre-Tensioner (RH) (Squib) Circuit

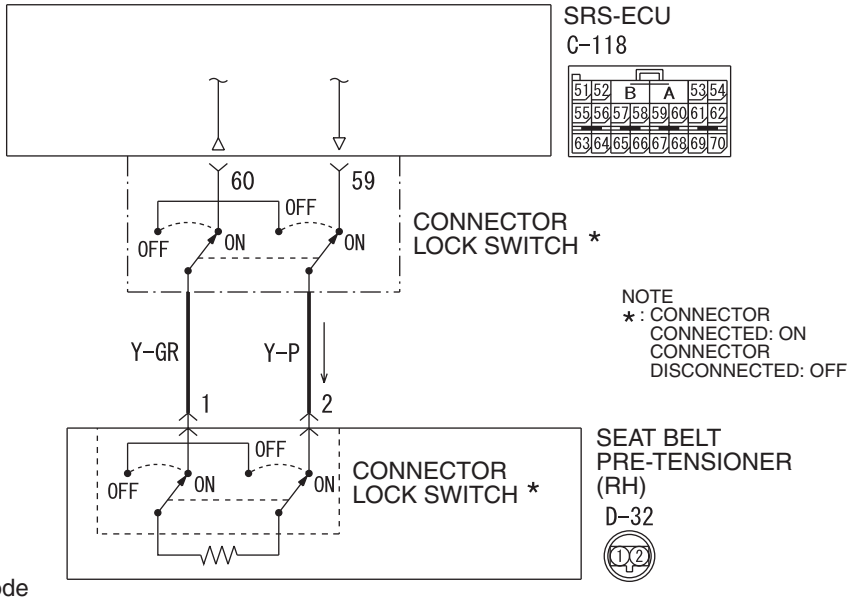

Wire colour code
B : Black LG : Light green G : Green L : Blue W : White Y : Yellow SB : Sky blue
BR : Brown O : Orange GR : Grey R : Red P : Pink V : Violet

W4X52E018A

AC503911AB

⚠ CAUTION

If diagnosis code B1460 is set in the SRS-ECU, always diagnose the CAN main bus line.

OPERATION

The SRS-ECU judges how severe a collision is by detecting signals from the front impact sensors and the front air bag analogue G-sensor. If the impact is over a predetermined level, the SRS-ECU sends an ignition signal. At this time, if the front air bag safing G-sensor is on, the pre-tensioner will deploy.

DIAGNOSIS CODE SET CONDITIONS

This diagnosis code is set if there is abnormal resistance between the input terminals of the seat belt pre-tensioner (RH) (squib).

PROBABLE CAUSES

- Improper engaged connector or defective short spring*
- Short circuit between the seat belt pre-tensioner (RH) (squib) circuit terminals
- Damaged connector(s)
- Malfunction of the SRS-ECU

*NOTE: *: The squib circuit connectors integrate a "short" spring (which prevents the seat belt pre-tensioner from deploying unintentionally due to static electricity by shorting the positive wire to the earth wire in the squib circuit when the connectors are disconnected) (Refer to P.52B-3). Therefore, if connector C-118 or D-32 is damaged or improperly engaged, the short spring may not be released when the connector is connected.*

DIAGNOSIS PROCEDURE

STEP 1. M.U.T.-III CAN bus diagnostics

Use the M.U.T.-III to diagnose the CAN bus lines.

Q: Is the check result normal?

YES : Go to Step 2 .

NO : Repair the CAN bus line (Refer to GROUP 54F, Diagnosis P.54F-13).

STEP 2. Check whether the diagnosis code is reset.

Check again if the diagnosis code is set.
(1) Erase the diagnosis code.
(2) Ignition: "LOCK" (OFF) position to "ON"
(3) On completion, check that the diagnosis code is not reset.

Q: Is the diagnosis code set?
YES : Go to Step 3 .
NO : There is an intermittent malfunction such as poor engaged connector(s) or open circuit (Refer to GROUP 00, How to Cope with Intermittent Malfunction P.00-5).

STEP 3. M.U.T.-III diagnosis code

⚠ CAUTION
To prevent damage to M.U.T.-III MB991958, always turn the ignition switch to the "LOCK" (OFF) position before connecting or disconnecting M.U.T.-III MB991958.

(1) Turn the ignition switch to the "ON" position.
(2) Check if the diagnosis code is set.
(3) Turn the ignition switch to the "LOOK" (OFF) position.

Q: Is diagnosis code B1519 set?
YES : Go to Step 4 .
NO : Go to Step 5 .

STEP 4. Connector lock check: SRS-ECU connector C-118 (M.U.T.-III diagnosis code).

(1) Disconnect the negative battery terminal.

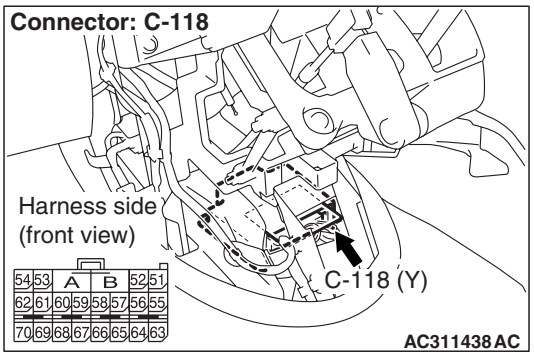

(2) Disconnect the connectors C-118 and then reconnect them.
(3) Connect the negative battery terminal.
(4) Erase the diagnosis code memory, and check the diagnosis code.

Q: Is diagnosis code B1460 set?
YES : Go to Step 5 .
NO : The procedure is complete. It is assumed that diagnosis code B1460 set as connector C-118 was engaged improperly.

STEP 5. Connector lock check: SRS-ECU connector C-118 and seat belt pre-tensioner (RH) connector D-32 (M.U.T.-III diagnosis code).

(1) Disconnect the negative battery terminal.

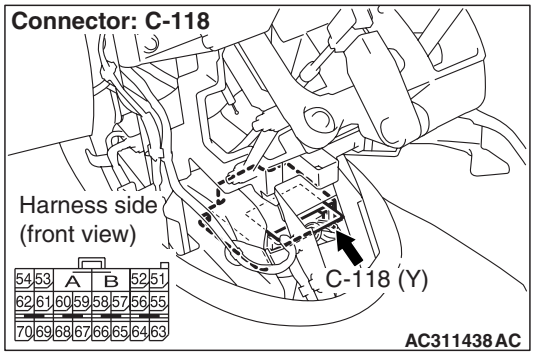

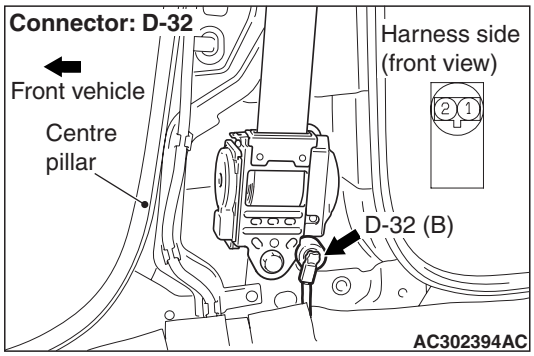

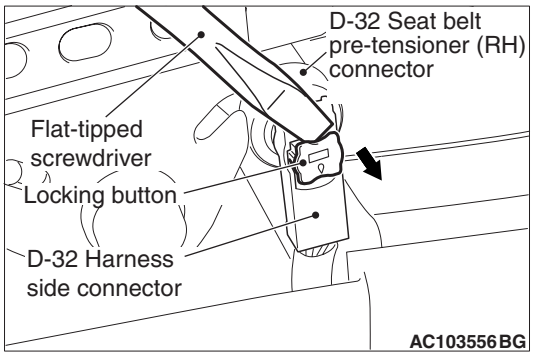

(2) Disconnect connectors C-118 and D-32, and then reconnect them. For connector D-32, use a flat-tipped screwdriver to unlock the locking button at the harness side connector by withdrawing it toward you in two stages, and then disconnect the connector.
(3) Connect the negative battery terminal.
(4) Erase the diagnosis code memory, and check the diagnosis code.

Q: Is diagnosis code B1460 set?
YES : Go to Step 6 .
NO : The procedure is complete. It is assumed that diagnosis code B1460 set as connector C-118 or D-32 was engaged improperly.

Main Index
Group TOC

STEP 6. Check the seat belt pre-tensioner (RH) (M.U.T.-III diagnosis code).

(1) Disconnect the negative battery terminal.

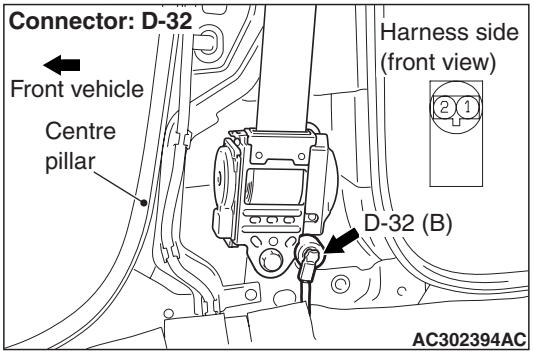

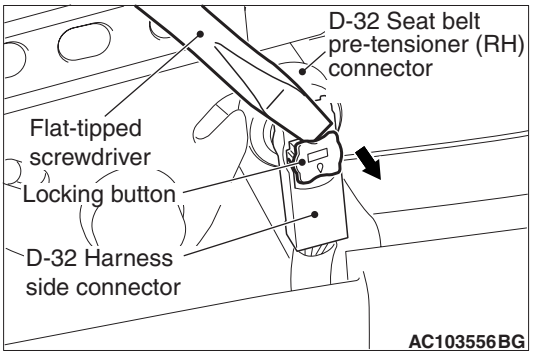

(2) Disconnect seat belt pre-tensioner (RH) connector D-32. Use a flat-tipped screwdriver to unlock the locking button at the harness side connector by withdrawing it toward you in two stages, and then disconnect the connector.

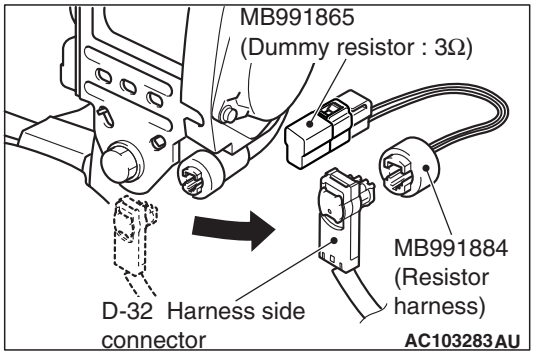

(3) Connect special tool dummy resistor (MB991865) to special tool resistor harness (MB991884).
(4) Connect special tool MB991884 to the D-32 harness side connector.
(5) Connect the negative battery terminal.
(6) Erase diagnosis code memory, and then check the diagnosis code.

Q: Is diagnosis code B1460 set?

YES : . Go to Step 7 .

NO : . Replace the seat belt pre-tensioner (RH) (Refer to P.52B-350). Then go to Step 8 .

STEP 7. Check the passenger's seat belt pre-tensioner circuit. Resistance measurement at the SRS-ECU connector C-118.

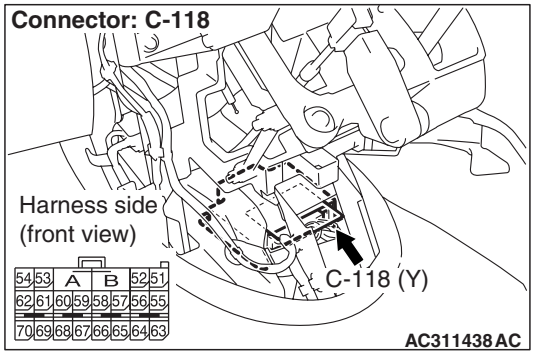

(1) Disconnect SRS-ECU connector C-118.

⚠ DANGER

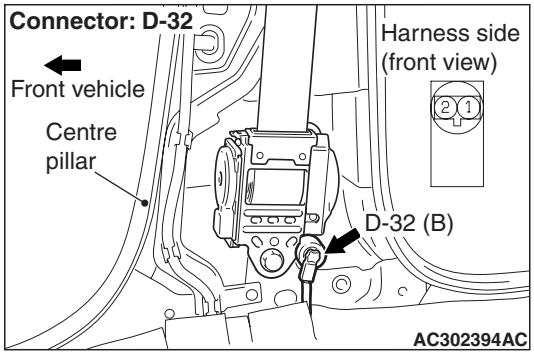

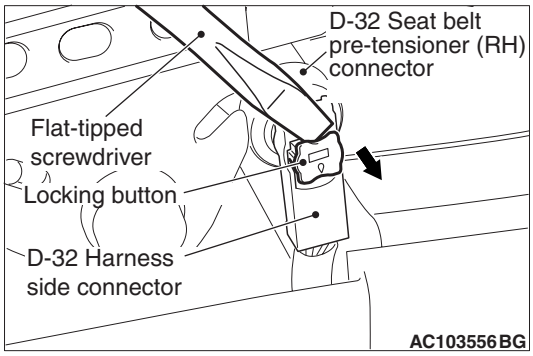

To prevent the seat belt pre-tensioner from deploying unintentionally, disconnect the seat belt pre-tensioner (RH) connector D-32 to short the squib circuit.

(2) Disconnect seat belt pre-tensioner (RH) connector D-32. Use a flat-tipped screwdriver to unlock the locking button at the harness side connector by withdrawing it toward you in two stages, and then disconnect the connector.

⚠ CAUTION

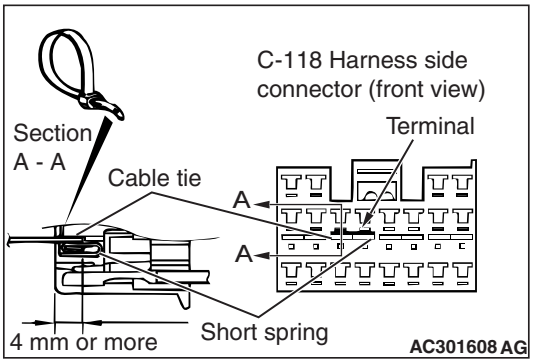

Insert an insulator such as a cable tie to a depth of 4mm or more, otherwise the short spring will not be released.

(3) Insert a cable tie [3 mm wide, 0.5 mm thick] between terminals 59, 60 and the short spring to release the short spring.

⚠ CAUTION

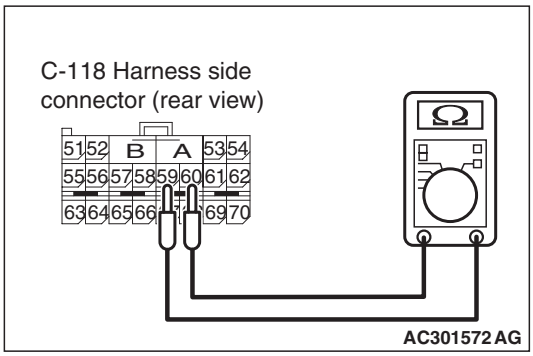

Do not insert a test probe into the terminal from its front side directly as the connector contact pressure may be weakened.

(4) Check for continuity between C-118 harness side connector terminals 59 and 60.

OK: Open circuit.

Q: Is the check result normal?

YES : . Go to Step 8 .

NO : . Repair the harness wires between SRS-ECU connector C-118 (terminal No.59 and 60) and seat belt pre-tensioner (RH) connector D-32 (terminal No.1 and 2).

STEP 8. Check whether the diagnosis code is reset.

Q: Is diagnosis code B1460 set?

YES : Replace the SRS-ECU (Refer to P.52B-332).

NO : An intermittent malfunction is suspected (Refer to GROUP 00, How to Use Troubleshooting/Inspection Service Points P.00-5).

Main Index
Group TOC

Code No.B1461: Seat Belt Pre-Tensioner (RH) (Squib) System Fault 2 (Open in the Squib Circuit)

Seat Belt Pre-Tensioner (RH) (Squib) Circuit

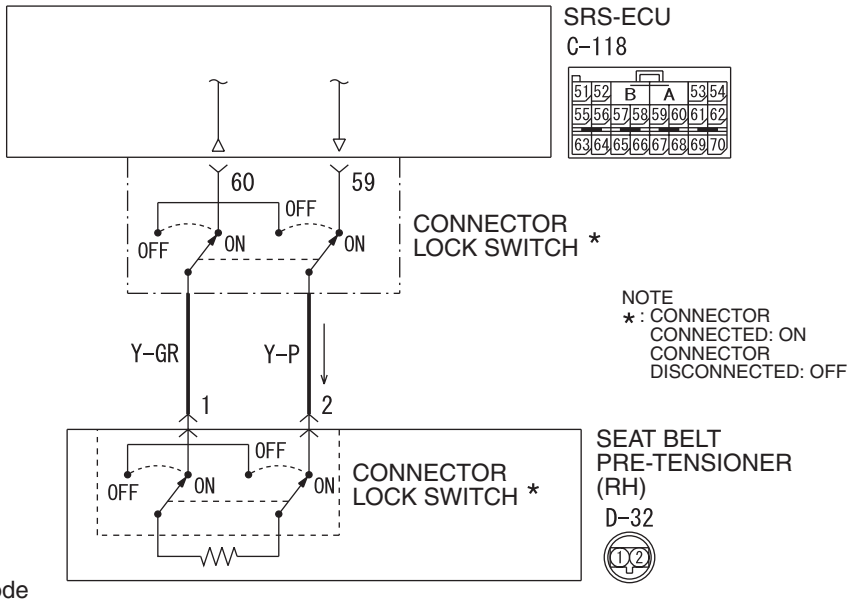

Wire colour code
B : Black LG : Light green G : Green L : Blue W : White Y : Yellow SB : Sky blue
BR : Brown O : Orange GR : Grey R : Red P : Pink V : Violet

W4X52E018A

AC503911AB

⚠ CAUTION

If diagnosis code B1461 is set in the SRS-ECU, always diagnose the CAN main bus line.

OPERATION

The SRS-ECU judges how severe a collision is by detecting signals from the front impact sensors and the front air bag analogue G-sensor. If the impact is over a predetermined level, the SRS-ECU sends an ignition signal. At this time, if the front air bag safing G-sensor is on, the pre-tensioner will deploy.

DIAGNOSIS CODE SET CONDITIONS

This diagnosis code is set if there is abnormal resistance between the input terminals of the seat belt pre-tensioner (RH) (squib).

PROBABLE CAUSES

- Open circuit in the seat belt pre-tensioner (RH) (squib) circuit
- Improper connector contact
- Malfunction of the SRS-ECU

DIAGNOSIS PROCEDURE

STEP 1. M.U.T.-III CAN bus diagnostics

Use the M.U.T.-III to diagnose the CAN bus lines.

Q: Is the check result normal?

YES : Go to Step 2 .

NO : Repair the CAN bus line (Refer to GROUP 54F, Diagnosis P.54F-13).

STEP 2. Check whether the diagnosis code is reset.

Check again if the diagnosis code is set.

(1) Erase the diagnosis code.
(2) Ignition: "LOCK" (OFF) position to "ON"
(3) On completion, check that the diagnosis code is not reset.

Q: Is the diagnosis code set?

YES : Go to Step 3 .

NO : There is an intermittent malfunction such as poor engaged connector(s) or open circuit (Refer to GROUP 00, How to Cope with Intermittent Malfunction P.00-5).

STEP 3. Check the seat belt pre-tensioner (RH) (M.U.T.-III diagnosis code).

(1) Disconnect the negative battery terminal.

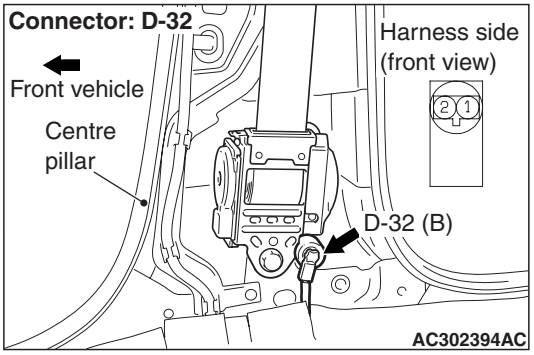

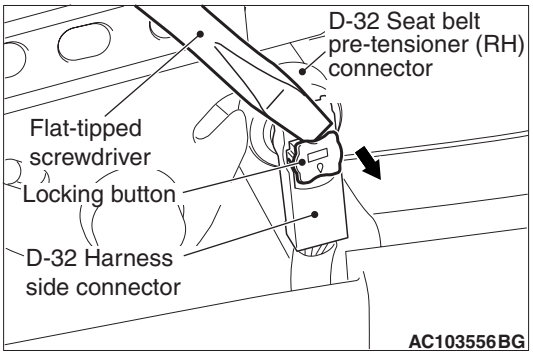

(2) Disconnect seat belt pre-tensioner connector (RH) D-32. Use a flat-tipped screwdriver to unlock the locking button at the harness side connector by withdrawing it toward you in two stages, and then disconnect the connector.

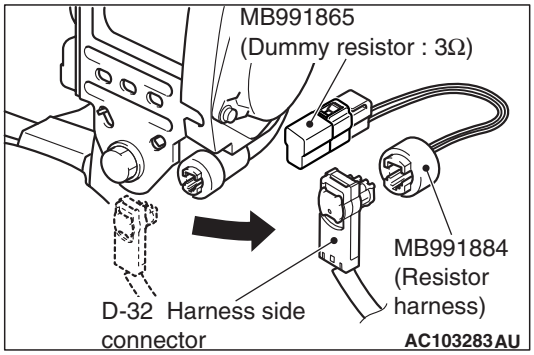

(3) Connect special tool dummy resistor (MB991865) to special tool resistor harness (MB991884).
(4) Connect special tool MB991884 to the D-32 harness side connector.
(5) Connect the negative battery terminal.
(6) Erase diagnosis code memory, and then check the diagnosis code.

Q: Is diagnosis code B1461 set?

YES : Go to Step 4 .

NO : Replace the seat belt pre-tensioner (Refer to P.52B-350).

STEP 4. Resistance measurement between SRS-ECU connector C-118 (terminal No.59 and 60) and the seat belt pre-tensioner (RH) connector D-32 (terminal No.1 and 2).

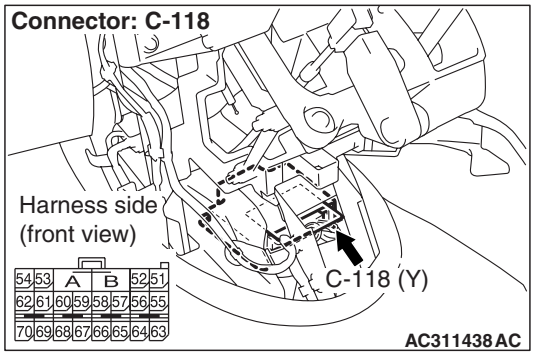

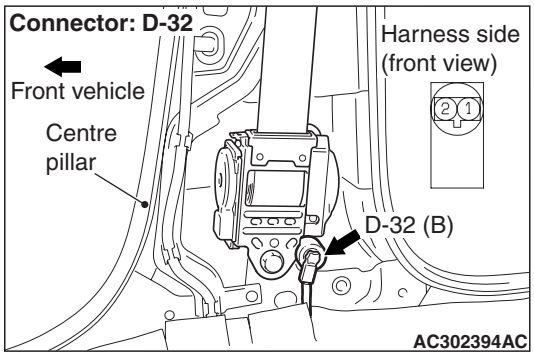

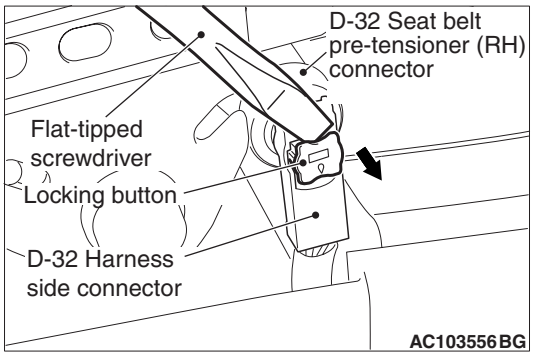

(1) Disconnect SRS-ECU connector C-118 and seat belt pre-tensioner (RH) connector D-32. For connector D-32, use a flat-tipped screwdriver to unlock the locking button at the harness side connector by withdrawing it toward you in two stages, and then disconnect the connector.

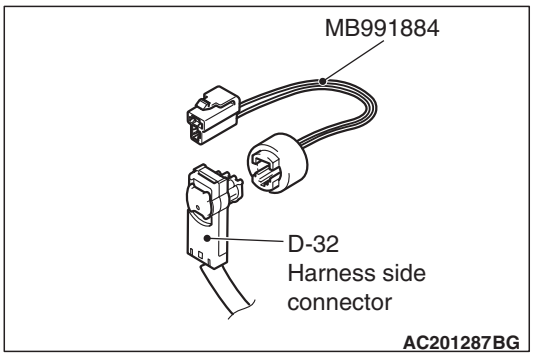

Main Index
Group TOC

(2) Connect D-32 harness side connector to special tool resistor harness (MB991884).

⚠ CAUTION

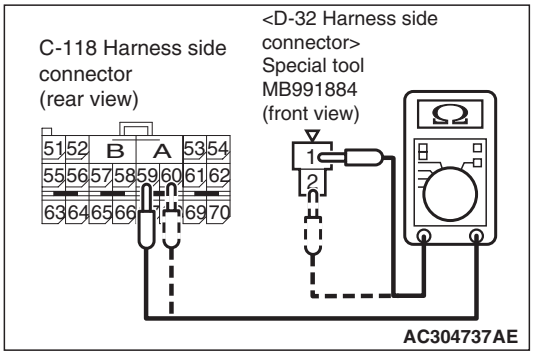

Do not insert a test probe into the terminal from its front side directly as the connector contact pressure may be weakened.

(3) Check for continuity between the following terminals.

- SRS-ECU connector C-118 (terminal No.59) and the special tool (terminal No.1)
- SRS-ECU connector C-118 (terminal No.60) and the special tool (terminal No.2)

OK: Less than 2 Ω

Q: Are the check results normal?

YES : Go to Step 5 .

NO : Repair the harness wires between SRS-ECU connector C-118 (terminal No.59 and 60) and seat belt pre-tensioner (RH) connector D-32 (terminal No.1 and 2).

STEP 5. Check whether the diagnosis code is reset.

Q: Is diagnosis code B1461 set?

YES : Replace the SRS-ECU (Refer to P.52B-332).

NO : An intermittent malfunction is suspected (Refer to GROUP 00, How to Use Troubleshooting/Inspection Service Points P.00-5).

Code No.B1462: Seat Belt Pre-Tensioner (RH) (Squib) System Fault for Earth Circuit (Short-Circuit to Earth)

Seat Belt Pre-Tensioner (RH) (Squib) Circuit

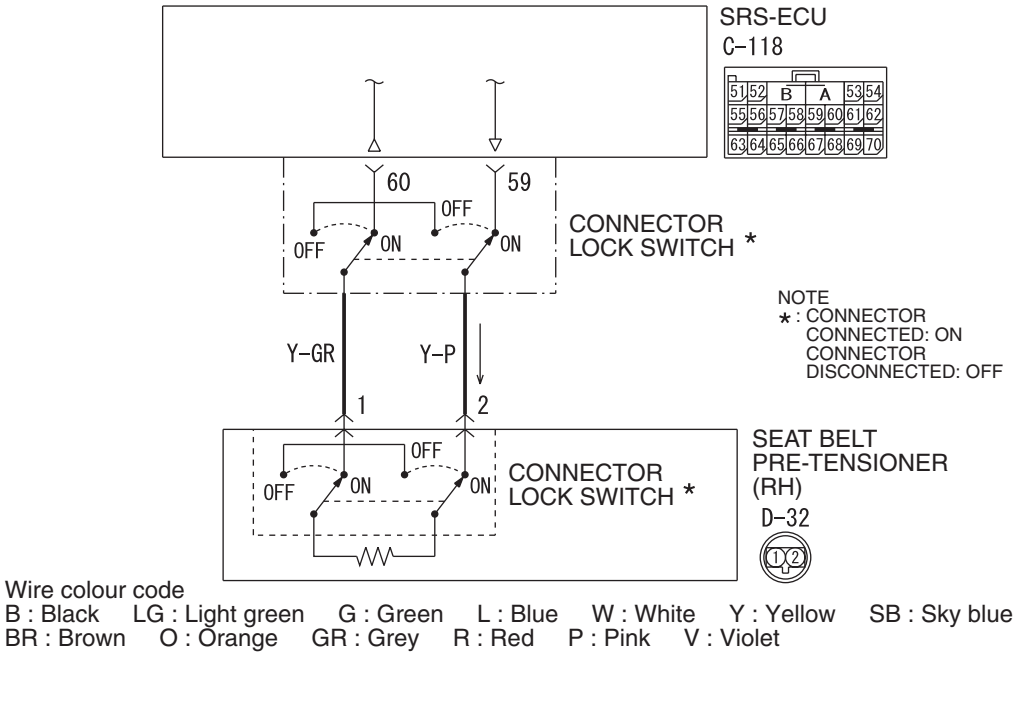

⚠ CAUTION

If diagnosis code B1462 is set in the SRS-ECU, always diagnose the CAN main bus line.

OPERATION

The SRS-ECU judges how severe a collision is by detecting signals from the front impact sensors and the front air bag analogue G-sensor. If the impact is over a predetermined level, the SRS-ECU sends an ignition signal. At this time, if the front air bag safing G-sensor is on, the pre-tensioner will deploy.

DIAGNOSIS CODE SET CONDITIONS

This diagnosis code is set if there is abnormal resistance between the input terminals of the seat belt pre-tensioner (RH) (squib).

PROBABLE CAUSES

- Damaged wiring harnesses or connectors
- Short to the earth in the seat belt pre-tensioner (RH) (squib) harness
- Malfunction of the SRS-ECU

DIAGNOSIS PROCEDURE

STEP 1. M.U.T.-III CAN bus diagnostics

Use the M.U.T.-III to diagnose the CAN bus lines.

Q: Is the check result normal?

YES : Go to Step 2 .

NO : Repair the CAN bus line (Refer to GROUP 54F, Diagnosis P.54F-13).

STEP 2. Check whether the diagnosis code is reset.

Check again if the diagnosis code is set.

(1) Erase the diagnosis code.

(2) Ignition: "LOCK" (OFF) position to "ON"

(3) On completion, check that the diagnosis code is not reset.

Q: Is the diagnosis code set?

YES : Go to Step 3 .

NO : There is an intermittent malfunction such as poor engaged connector(s) or open circuit (Refer to GROUP 00, How to Cope with Intermittent Malfunction P.00-5).

STEP 3. Check the seat belt pre-tensioner (RH) (M.U.T.-III diagnosis code).

(1) Disconnect the negative battery terminal.

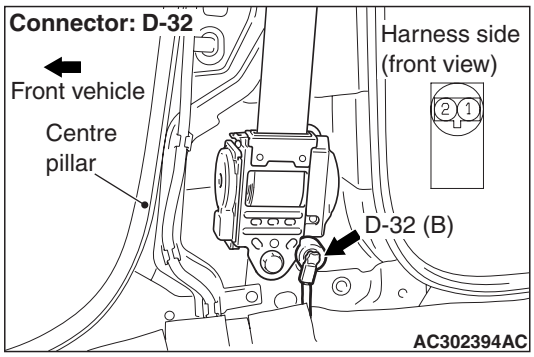

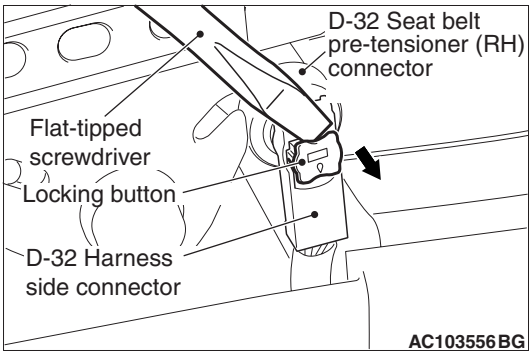

(2) Disconnect seat belt pre-tensioner (RH) connector D-32. Use a flat-tipped screwdriver to unlock the locking button at the harness side connector by withdrawing it toward you in two stages, and then disconnect the connector.

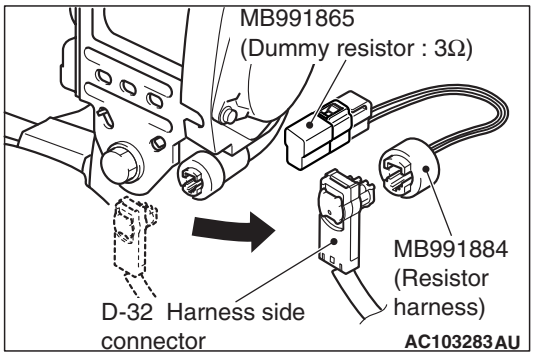

(3) Connect special tool dummy resistor (MB991865) to special tool resistor harness (MB991884).

(4) Connect special tool MB991884 to the D-32 harness side connector.

(5) Connect the negative battery terminal.

(6) Erase diagnosis code memory, and then check the diagnosis code.

Q: Is diagnosis code B1462 set?

YES : Go to Step 4 .

NO : Replace the seat belt pre-tensioner (RH) (Refer to P.52B-350).

Main Index
Group TOC

STEP 4. Check the seat belt pre-tensioner (RH) circuit. Resistance measurement at the SRS-ECU connector C-118.

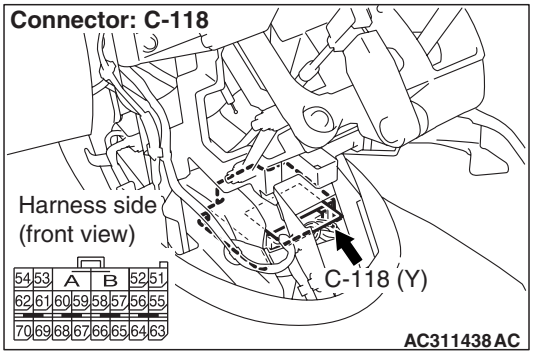

(1) Disconnect SRS-ECU connector C-118.

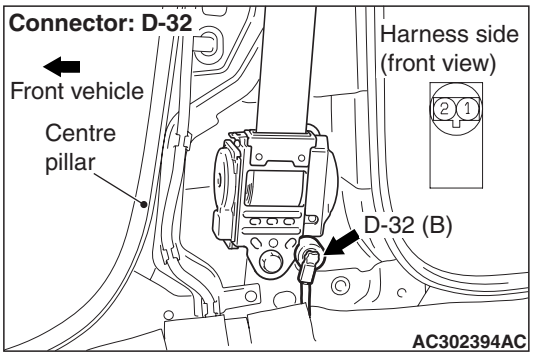

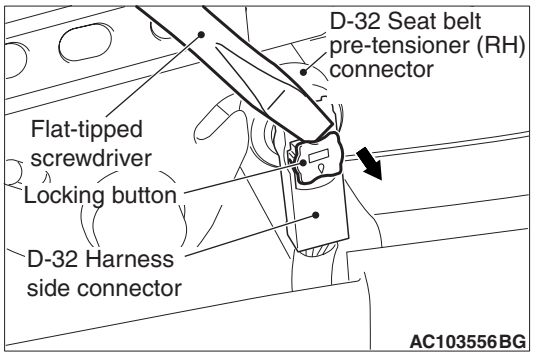

(2) Disconnect seat belt pre-tensioner (RH) connector D-32. Use a flat-tipped screwdriver to unlock the locking button at the harness side connector by withdrawing it toward you in two stages, and then disconnect the connector.

⚠ CAUTION

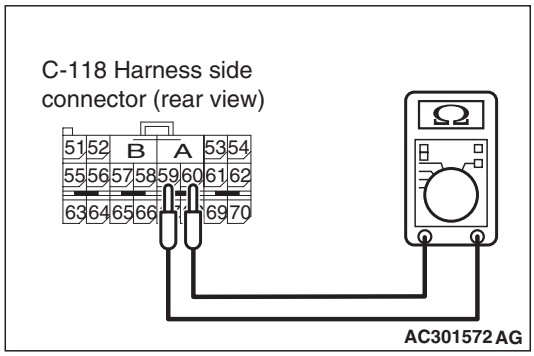

Do not insert a test probe into the terminal from its front side directly, as the connector contact pressure may be weakened.

(3) Check for continuity between C-118 harness side connector terminals 59, 60 and body earth.

OK: Open circuit

Q: Is the check result normal?

YES : Go to Step 5 .

NO : Repair the harness wire between SRS-ECU connector C-118 (terminal No. 59 and 60) and seat belt pre-tensioner (RH) connector D-32 (terminal No. 1 and 2).

STEP 5. Check whether the diagnosis code is reset.

Q: Is diagnosis code B1462 set?

YES : Replace the SRS-ECU (Refer to P.52B-332).

NO : An intermittent malfunction is suspected (Refer to GROUP 00, How to Use Troubleshooting/Inspection Service Points P.00-5).

Main Index
Group TOC

Code No.B1463: Seat Belt Pre-Tensioner (RH) (Squib) System Fault for Power Supply Circuit (Short-Circuited to Power Supply)

Seat Belt Pre-Tensioner (RH) (Squib) Circuit

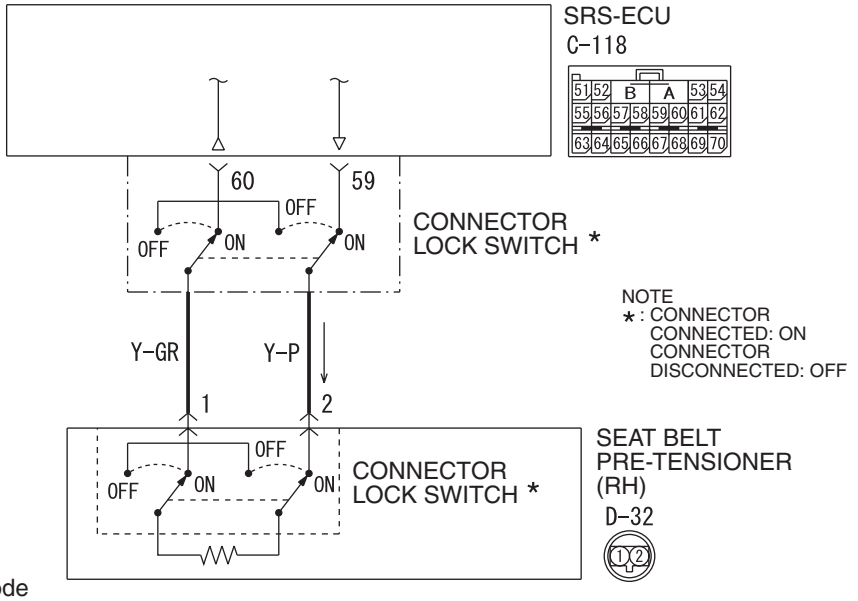

Wire colour code
B : Black LG : Light green G : Green L : Blue W : White Y : Yellow SB : Sky blue
BR : Brown O : Orange GR : Grey R : Red P : Pink V : Violet

W4X52E018A

AC503911AB

⚠ CAUTION

If diagnosis code B1463 is set in the SRS-ECU, always diagnose the CAN main bus line.

OPERATION

The SRS-ECU judges how severe a collision is by detecting signals from the front impact sensors and the front air bag analogue G-sensor. If the impact is over a predetermined level, the SRS-ECU sends an ignition signal. At this time, if the front air bag safing G-sensor is on, the pre-tensioner will deploy.

DIAGNOSIS CODE SET CONDITIONS

This diagnosis code is set if there is abnormal resistance between the input terminals of the seat belt pre-tensioner (RH) (squib).

TROUBLESHOOTING HITS

- Damaged wiring harnesses or connectors
- Short to the power supply in the seat belt pre-tensioner (RH) (squib) harness
- Malfunction of the SRS-ECU

DIAGNOSIS PROCEDURE

STEP 1. M.U.T.-III CAN bus diagnostics

Use the M.U.T.-III to diagnose the CAN bus lines.

Q: Is the check result normal?

YES : Go to Step 2 .

NO : Repair the CAN bus line (Refer to GROUP 54F, Diagnosis P.54F-13).

STEP 2. Check whether the diagnosis code is reset.

Check again if the diagnosis code is set.

(1) Erase the diagnosis code.
(2) Ignition: "LOCK" (OFF) position to "ON"
(3) On completion, check that the diagnosis code is not reset.

Q: Is the diagnosis code set?

YES : Go to Step 3 .

NO : There is an intermittent malfunction such as poor engaged connector(s) or open circuit (Refer to GROUP 00, How to Cope with Intermittent Malfunction P.00-5).

STEP 3. Check the seat belt pre-tensioner (RH) (M.U.T.-III diagnosis code).

(1) Disconnect the negative battery terminal.

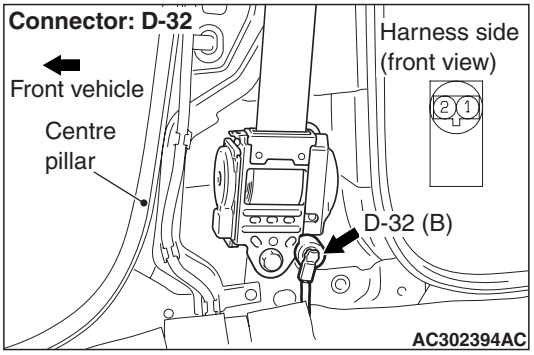

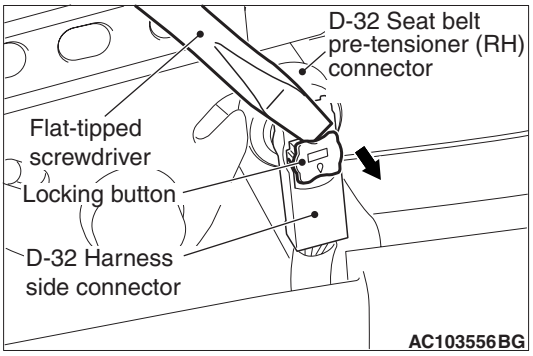

(2) Disconnect seat belt pre-tensioner (RH) connector D-32. Use a flat-tipped screwdriver to unlock the locking button at the harness side connector by withdrawing it toward you in two stages, and then disconnect the connector.

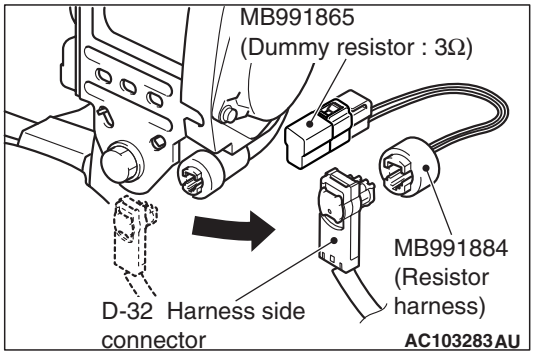

(3) Connect special tool dummy resistor (MB991865) to special tool resistor harness (MB991884).
(4) Connect special tool MB991884 to the D-32 harness side connector.
(5) Connect the negative battery terminal.
(6) Erase diagnosis code memory, and then check the diagnosis code.

Q: Is diagnosis code B1463 set?

YES : . Go to Step 4 .

NO : . Replace the seat belt pre-tensioner (RH) (Refer to P.52B-350).

STEP 4. Check the seat belt pre-tensioner circuit. Voltage measurement at the SRS-ECU connector C-118.

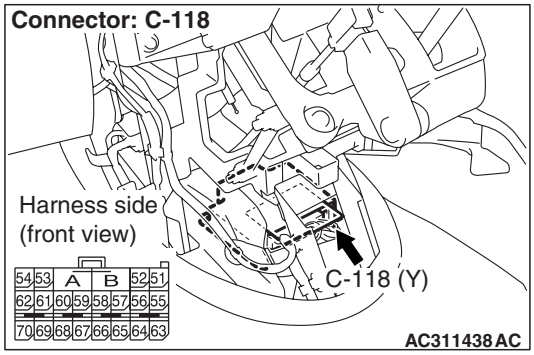

(1) Disconnect SRS-ECU connector C-118.

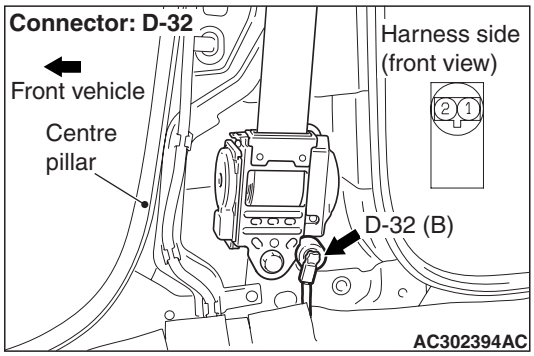

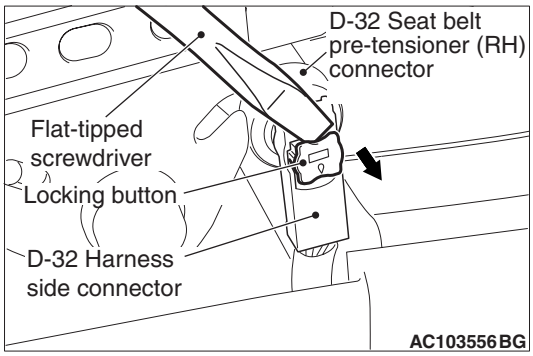

(2) Disconnect seat belt pre-tensioner (RH) connector D-32. Use a flat-tipped screwdriver to unlock the locking button at the harness side connector by withdrawing it toward you in two stages, and then disconnect the connector.

(3) Turn the ignition switch to the "ON" position,

⚠ CAUTION

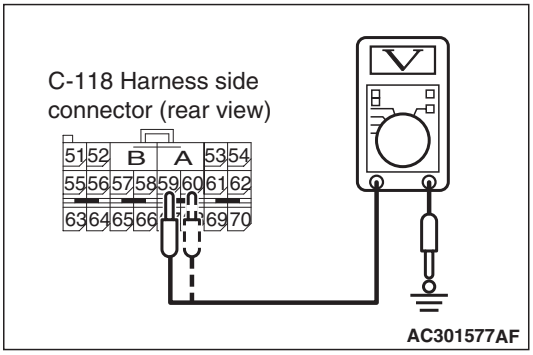

Do not insert a test probe into the terminal from its front side directly, as the connector contact pressure may be weakened.

(4) Measure the voltage between C-118 harness side connector terminals 59, 60 and body earth.

OK: 0 V

Q: Is the measured voltage within the specified range?

YES : Go to Step 5 .

NO : Repair the harness wire between SRS-ECU connector C-118 (terminal No.59 and 60) and seat belt pre-tensioner (RH) connector D-32 (terminal No.1 and 2).

STEP 5. Check whether the diagnosis code is reset.

Q: Is diagnosis code B1463 set?

YES : Replace the SRS-ECU (Refer to P.52B-332).

NO : An intermittent malfunction is suspected (Refer to GROUP 00, How to Use Troubleshooting/Inspection Service Points P.00-5).

Code No.B1470: Seat Belt Pre-Tensioner (LH) (Squib) System Fault 1 (Short Circuit between Terminals of the Squib Circuit)

Seat Belt Pre-Tensioner (LH) (Squib) Circuit

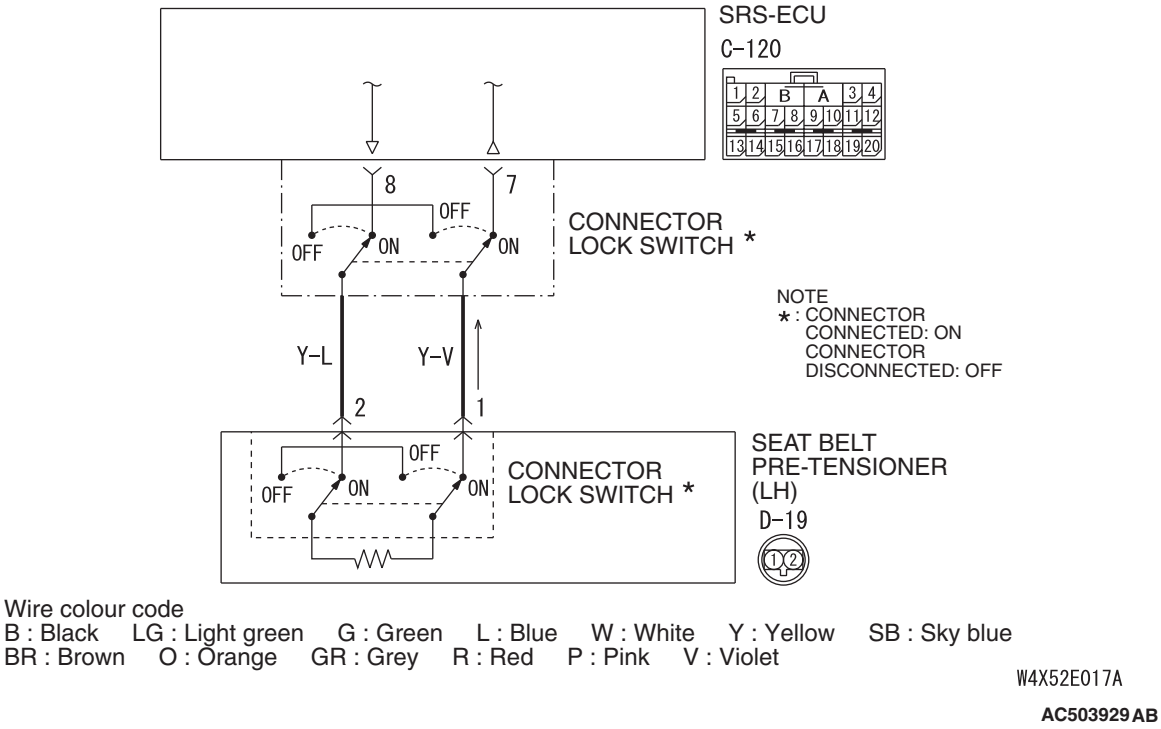

Main Index
Group TOC

⚠ CAUTION

If diagnosis code B1470 is set in the SRS-ECU, always diagnose the CAN main bus line.

OPERATION

The SRS-ECU judges how severe a collision is by detecting signals from the front impact sensors and the front air bag analogue G-sensor. If the impact is over a predetermined level, the SRS-ECU sends an ignition signal. At this time, if the front air bag safing G-sensor is on, the pre-tensioner will deploy.

DIAGNOSIS CODE SET CONDITIONS

This diagnosis code is set if there is abnormal resistance between the input terminals of the seat belt pre-tensioner (LH) (squib).

PROBABLE CAUSES

- Improper engaged connector or defective short spring*
- Short circuit between the seat belt pre-tensioner (LH) (squib) circuit terminals
- Damaged connector(s)
- Malfunction of the SRS-ECU

*NOTE: *: The squib circuit connectors integrate a "short" spring (which prevents the seat belt pre-tensioner from deploying unintentionally due to static electricity by shorting the positive wire to the earth wire in the squib circuit when the connectors are disconnected) (Refer to P.52B-3). Therefore, if connector C-120 or D-19 is damaged or improperly engaged, the short spring may not be released when the connector is connected.*

DIAGNOSIS PROCEDURE

STEP 1. M.U.T.-III CAN bus diagnostics

Use the M.U.T.-III to diagnose the CAN bus lines.

Q: Is the check result normal?

YES : Go to Step 2 .

NO : Repair the CAN bus line (Refer to GROUP 54F, Diagnosis P.54F-13).

STEP 2. Check whether the diagnosis code is reset.

Check again if the diagnosis code is set.

(1) Erase the diagnosis code.
(2) Ignition: "LOCK" (OFF) position to "ON"
(3) On completion, check that the diagnosis code is not reset.

Q: Is the diagnosis code set?

YES : Go to Step 3 .

NO : There is an intermittent malfunction such as poor engaged connector(s) or open circuit (Refer to GROUP 00, How to Cope with Intermittent Malfunction P.00-5).

STEP 3. M.U.T.-III diagnosis code

⚠ CAUTION

To prevent damage to M.U.T.-III MB991958, always turn the ignition switch to the "LOCK" (OFF) position before connecting or disconnecting M.U.T.-III MB991958.

(1) Turn the ignition switch to the "ON" position.
(2) Check if the diagnosis code is set.
(3) Turn the ignition switch to the "LOOK" (OFF) position.

Q: Is diagnosis code B1519 set?

YES : Go to Step 4 .

NO : Go to Step 5 .

STEP 4. Connector lock check: SRS-ECU connector C-120 (M.U.T.-III diagnosis code).

(1) Disconnect the negative battery terminal.

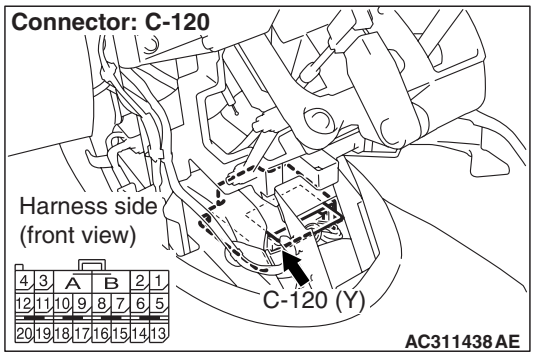

(2) Disconnect the connectors C-120 and then reconnect them.
(3) Connect the negative battery terminal.
(4) Erase the diagnosis code memory, and check the diagnosis code.

Q: Is diagnosis code B1470 set?

YES : Go to Step 5 .

NO : The procedure is complete. It is assumed that diagnosis code B1470 set as connector C-120, D-19 was engaged improperly.

STEP 5. Connector lock check: SRS-ECU connector C-120 and seat belt pre-tensioner (LH) connector D-19 (M.U.T.-III diagnosis code).

(1) Disconnect the negative battery terminal.

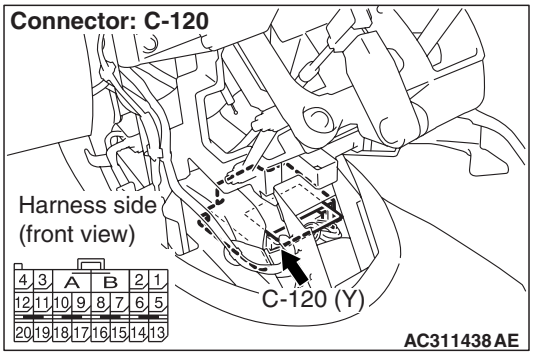

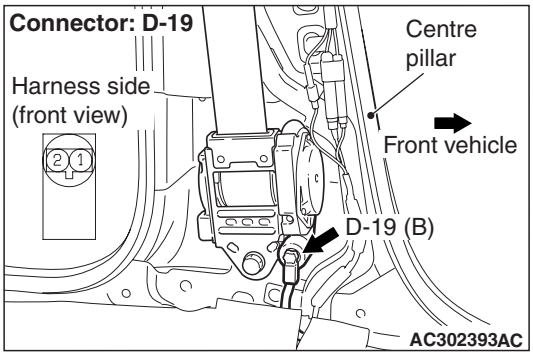

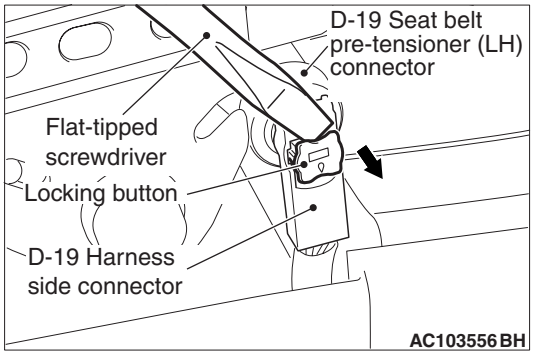

(2) Disconnect connectors C-120 and D-19, and then reconnect them. For connector D-19, use a flat-tipped screwdriver to unlock the locking button at the harness side connector by withdrawing it toward you in two stages, and then disconnect the connector.
(3) Connect the negative battery terminal.
(4) Erase the diagnosis code memory, and check the diagnosis code.

Q: Is diagnosis code B1470 set?
YES : Go to Step 6 .
NO : The procedure is complete. It is assumed that diagnosis code B1470 set because connector C-120 or D-19 was engaged improperly.

STEP 6. Check the seat belt pre-tensioner (LH) (M.U.T.-III diagnosis code).

(1) Disconnect the negative battery terminal.

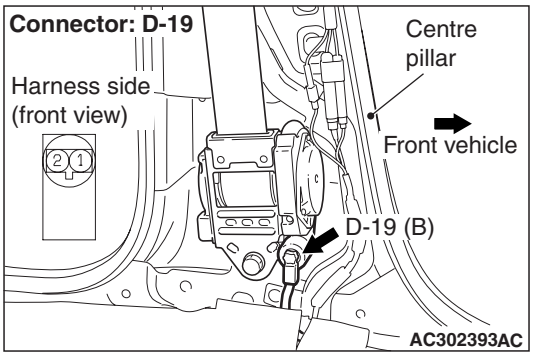

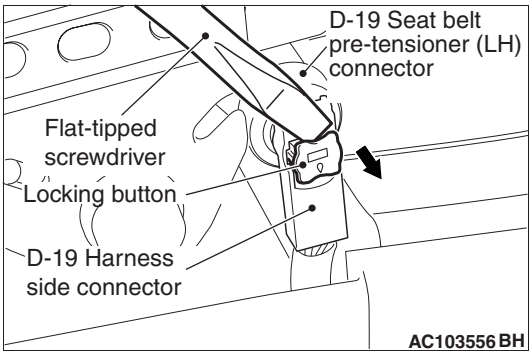

(2) Disconnect seat belt pre-tensioner (LH) connector D-19. Use a flat-tipped screwdriver to unlock the locking button at the harness side connector by withdrawing it toward you in two stages, and then disconnect the connector.

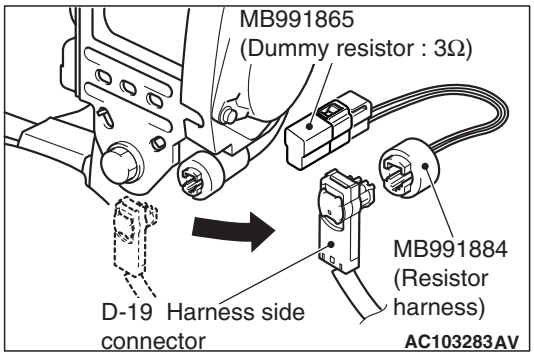

(3) Connect special tool dummy resistor (MB991865) to special tool resistor harness (MB991884).
(4) Connect special tool MB991884 to the D-19 harness side connector.
(5) Connect the negative battery terminal.
(6) Erase diagnosis code memory, and then check the diagnosis code.

Q: Is diagnosis code B1470 set?
YES : Go to Step 7 .
NO : Replace the seat belt pre-tensioner (LH) (Refer to P.52B-350).

STEP 7. Check the seat belt pre-tensioner (LH) circuit. Resistance measurement at the SRS-ECU connector C-120.

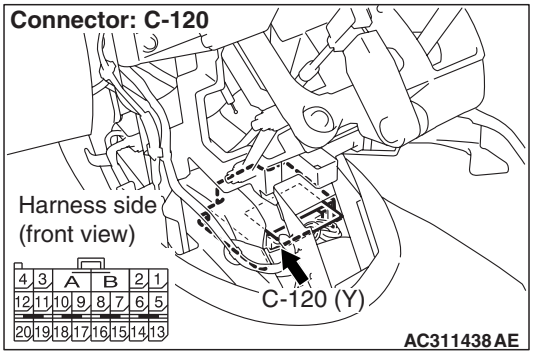

(1) Disconnect SRS-ECU connector C-120.

⚠ DANGER

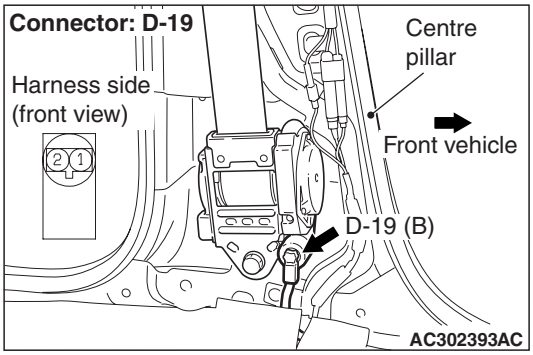

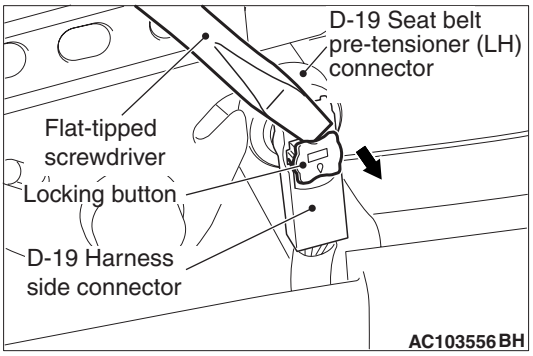

To prevent the seat belt pre-tensioner from deploying unintentionally, disconnect the seat belt pre-tensioner (LH) connector D-19 to short the squib circuit.

(2) Disconnect seat belt pre-tensioner (LH) connector D-19. Use a flat-tipped screwdriver to unlock the locking button at the harness side connector by withdrawing it toward you in two stages, and then disconnect the connector.

⚠ CAUTION

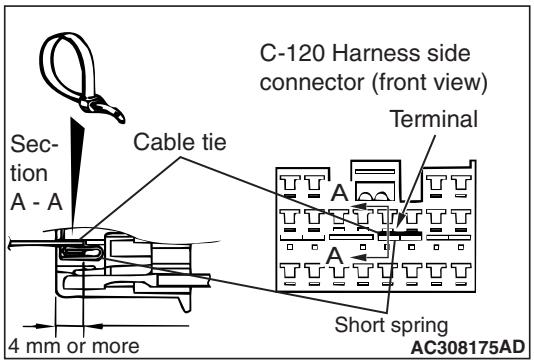

Insert an insulator such as a cable tie to a depth of 4mm or more, otherwise the short spring will not be released.

(3) Insert a cable tie [3 mm wide, 0.5 mm thick] between terminals 7, 8 and the short spring to release the short spring.

⚠ CAUTION

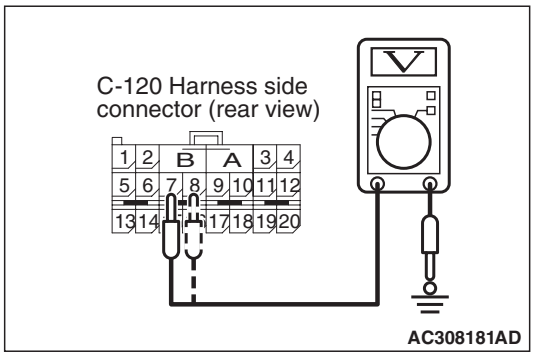

Do not insert a test probe into the terminal from its front side directly, as the connector contact pressure may be weakened.

(4) Check for continuity between C-120 harness side connector terminals 7 and 8.

OK: Open circuit.

Q: Is the check result normal?

YES : Go to Step 8 .

NO : Repair the harness wires between SRS-ECU connector C-120 (terminal No.7 and 8) and seat belt pre-tensioner (LH) connector D-19 (terminal No.1 and 2).

STEP 8. Check whether the diagnosis code is reset.

Q: Is diagnosis code B1470 set?

YES : Replace the SRS-ECU (Refer to P.52B-332).

NO : An intermittent malfunction is suspected (Refer to GROUP 00, How to Use Troubleshooting/Inspection Service Points P.00-5).

Main Index
Group TOC

Code No.B1471: Seat Belt Pre-Tensioner (LH) (Squib) System Fault 2 (Open in the Squib Circuit)

Seat Belt Pre-Tensioner (LH) (Squib) Circuit

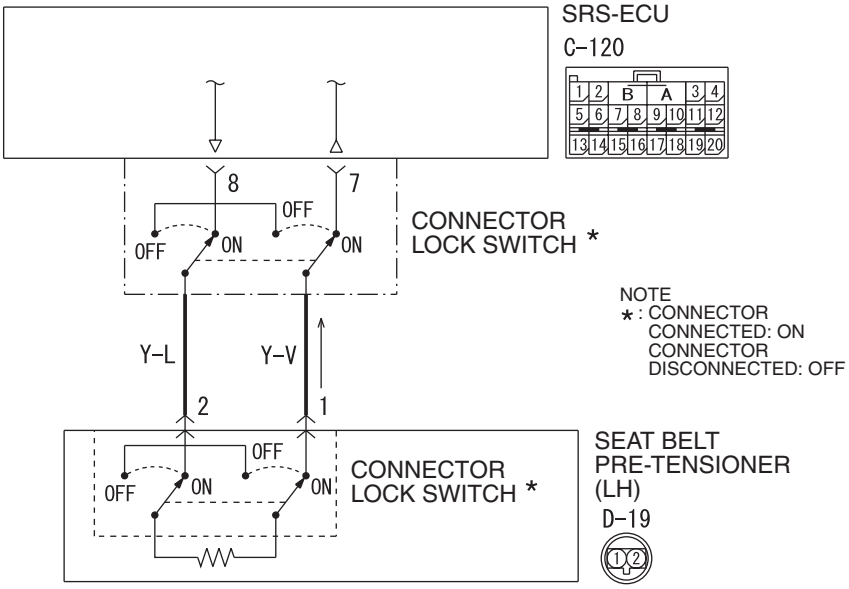

Wire colour code
B : Black LG : Light green G : Green L : Blue W : White Y : Yellow SB : Sky blue
BR : Brown O : Orange GR : Grey R : Red P : Pink V : Violet

W4X52E017A

AC503929 AB

⚠ CAUTION

If diagnosis code B1471 is set in the SRS-ECU, always diagnose the CAN main bus line.

OPERATION

The SRS-ECU judges how severe a collision is by detecting signals from the front impact sensors and the front air bag analogue G-sensor. If the impact is over a predetermined level, the SRS-ECU sends an ignition signal. At this time, if the front air bag safing G-sensor is on, the pre-tensioner will deploy.

DIAGNOSIS CODE SET CONDITIONS

This diagnosis code is set if there is abnormal resistance between the input terminals of the seat belt pre-tensioner (LH) (squib).

PROBABLE CAUSES

- Improper connector contact
- Open circuit in the seat belt pre-tensioner (LH) (squib) circuit
- Malfunction of the SRS-ECU

DIAGNOSIS PROCEDURE

STEP 1.M.U.T.-III CAN bus diagnostics

Use the M.U.T.-III to diagnose the CAN bus lines.

Q: Is the check result normal?

YES : Go to Step 2 .

NO : Repair the CAN bus line (Refer to GROUP 54F, Diagnosis P.54F-13).

STEP 2. Check whether the diagnosis code is reset.

Check again if the diagnosis code is set.

(1) Erase the diagnosis code.
(2) Ignition: "LOCK" (OFF) position to "ON"
(3) On completion, check that the diagnosis code is not reset.

Q: Is the diagnosis code set?

YES : Go to Step 3.

NO : There is an intermittent malfunction such as poor engaged connector(s) or open circuit (Refer to GROUP 00, How to Cope with Intermittent Malfunction P.00-5).

STEP 3. Check the seat belt pre-tensioner (LH) (M.U.T.-III diagnosis code).

(1) Disconnect the negative battery terminal.

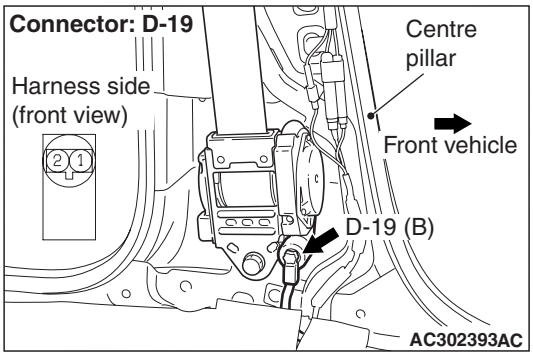

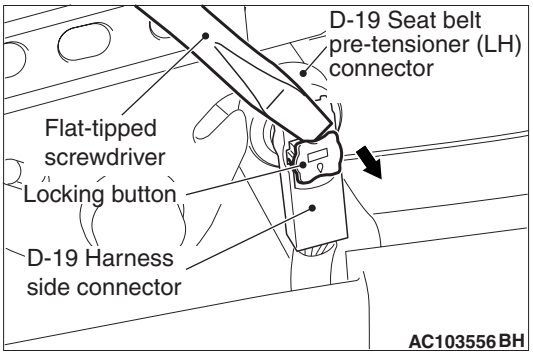

(2) Disconnect seat belt pre-tensioner (LH) connector D-19. Use a flat-tipped screwdriver to unlock the locking button at the harness side connector by withdrawing it toward you in two stages, and then disconnect the connector.

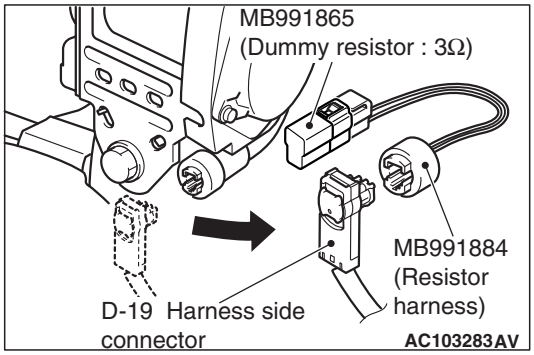

(3) Connect special tool dummy resistor (MB991865) to special tool resistor harness (MB991884).
(4) Connect special tool MB991884 to the D-19 harness side connector.
(5) Connect the negative battery terminal.
(6) Erase diagnosis code memory, and then check the diagnosis code.

Q: Is diagnosis code B1471 set?

YES : . Go to Step 4 .

NO : . Replace the seat belt pre-tensioner (LH) (Refer to P.52B-350).

STEP 4. Resistance measurement between SRS-ECU connector C-120 (terminal No.7 and 8) and the seat belt pre-tensioner (LH) connector D-19 (terminal No.1 and 2).

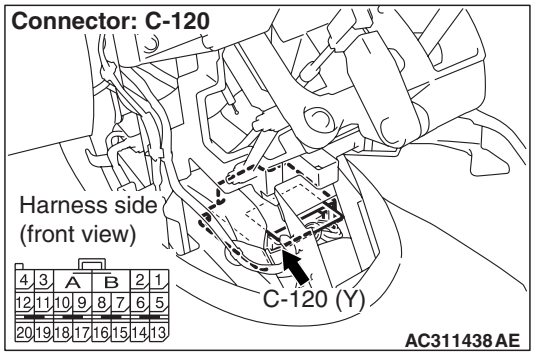

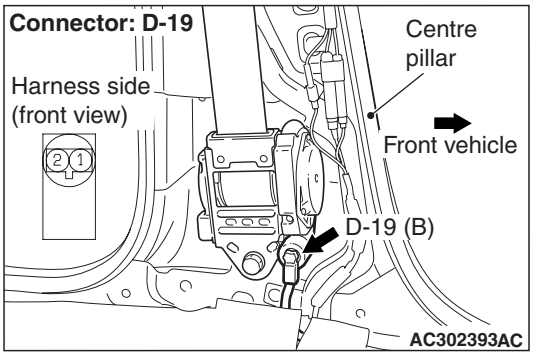

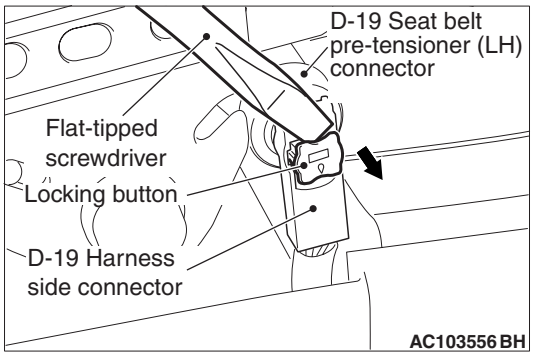

(1) Disconnect SRS-ECU connector C-120 and seat belt pre-tensioner (LH) connector D-19, and measure at the wiring harness side. For connector D-19, use a flat-tipped screwdriver to unlock the locking button at the harness side connector by with drawing it toward you in two stages, and then disconnect the connector.

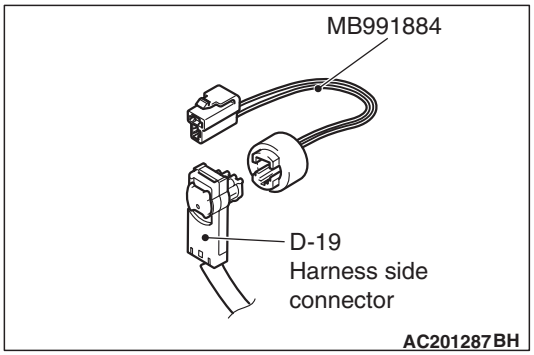

(2) Connect D-19 harness side connector to special tool resistor harness (MB991884).

⚠ CAUTION

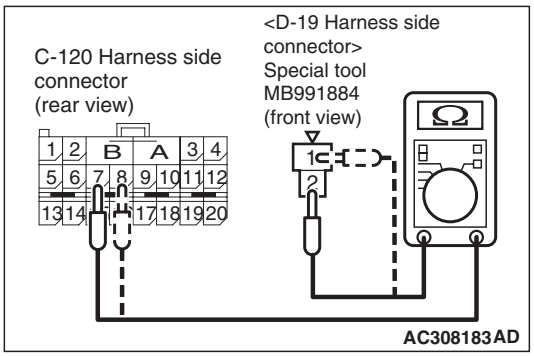

Do not insert a test probe into the terminal from its front side directly, as the connector contact pressure may be weakened.

(3) Check for continuity between the following terminals.
- SRS-ECU connector C-120 (terminal No.7) and the special tool (terminal No.2)
- SRS-ECU connector C-120 (terminal No.8) and the special tool (terminal No.1)

OK: Less than 2 Ω

Q: Are the check results normal?
YES : Go to Step 5 .
NO : Repair the harness wires between SRS-ECU connector C-120 (terminal No.7 and 8) seat belt pre-tensioner (LH) connector D-19 (terminal No.1 and 2).

STEP 5. Check whether the diagnosis code is reset.

Q: Is diagnosis code B1471 set?
YES : Replace the SRS-ECU (Refer to P.52B-332).
NO : An intermittent malfunction is suspected (Refer to GROUP 00, How to Use Troubleshooting/Inspection Service Points P.00-5).

Main Index
Group TOC

Code No.B1472: Seat Belt Pre-Tensioner (LH) (Squib) System Fault for Earth Circuit (Short-Circuited to Earth)

Seat Belt Pre-Tensioner (LH) (Squib) Circuit

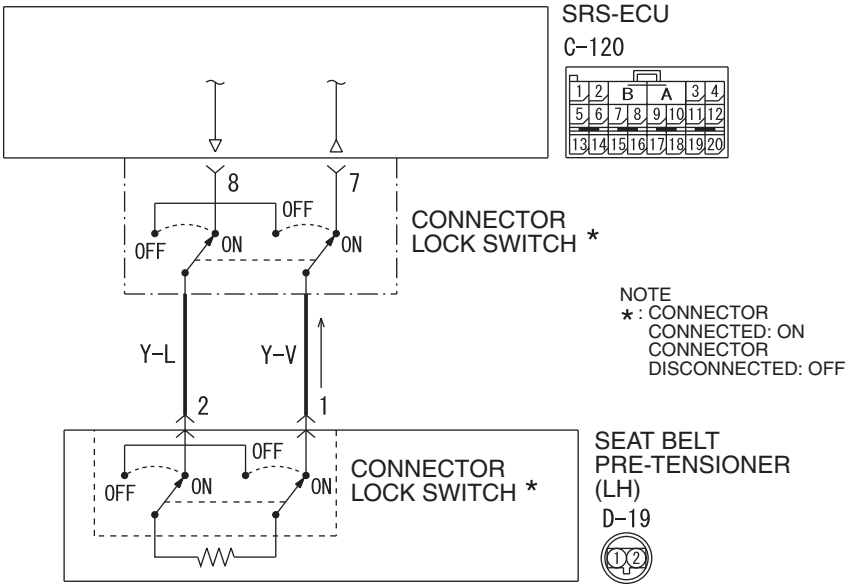

Wire colour code
B : Black LG : Light green G : Green L : Blue W : White Y : Yellow SB : Sky blue
BR : Brown O : Orange GR : Grey R : Red P : Pink V : Violet

W4X52E017A

AC503929 AB

⚠ CAUTION

If diagnosis code B1472 is set in the SRS-ECU, always diagnose the CAN main bus line.

OPERATION

The SRS-ECU judges how severe a collision is by detecting signals from the front impact sensors and the front air bag analogue G-sensor. If the impact is over a predetermined level, the SRS-ECU sends an ignition signal. At this time, if the front air bag safing G-sensor is on, the pre-tensioner will deploy.

DIAGNOSIS CODE SET CONDITIONS

This diagnosis code is set if there is abnormal resistance between the input terminals of the seat belt pre-tensioner (LH) (squib).

PROBABLE CAUSES

- Damaged wiring harnesses or connectors
- Short to the earth in the seat belt pre-tensioner (LH) (squib) harness
- Malfunction of the SRS-ECU

DIAGNOSIS PROCEDURE

STEP 1. M.U.T.-III CAN bus diagnostics

Use the M.U.T.-III to diagnose the CAN bus lines.

Q: Is the check result normal?

YES : Go to Step 2 .

NO : Repair the CAN bus line (Refer to GROUP 54F, Diagnosis P.54F-13).

STEP 2. Check whether the diagnosis code is reset.

Check again if the diagnosis code is set.

(1) Erase the diagnosis code.
(2) Ignition: "LOCK" (OFF) position to "ON"
(3) On completion, check that the diagnosis code is not reset.

Q: Is the diagnosis code set?

YES : Go to Step 3 .

NO : There is an intermittent malfunction such as poor engaged connector(s) or open circuit (Refer to GROUP 00, How to Cope with Intermittent Malfunction P.00-5).

STEP 3. Check the seat belt pre-tensioner (LH) (M.U.T.-III diagnosis code).

(1) Disconnect the negative battery terminal.

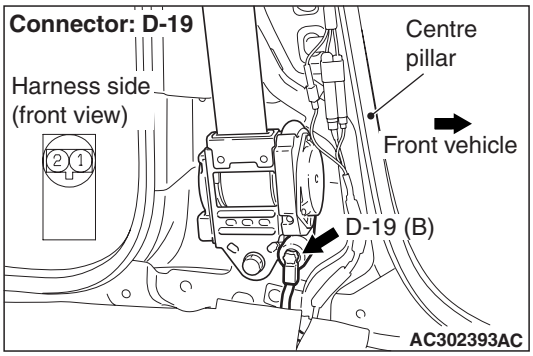

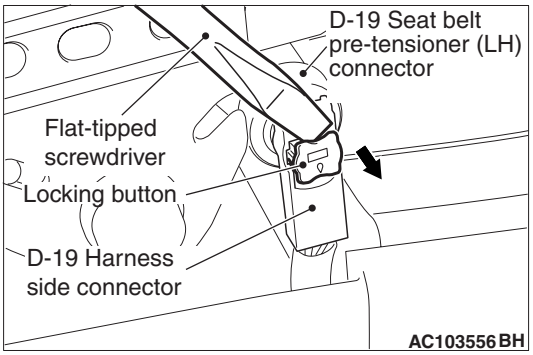

(2) Disconnect seat belt pre-tensioner (LH) connector D-19. Use a flat-tipped screwdriver to unlock the locking button at the harness side connector by with drawing it toward you in two stages, and then disconnect the connector.

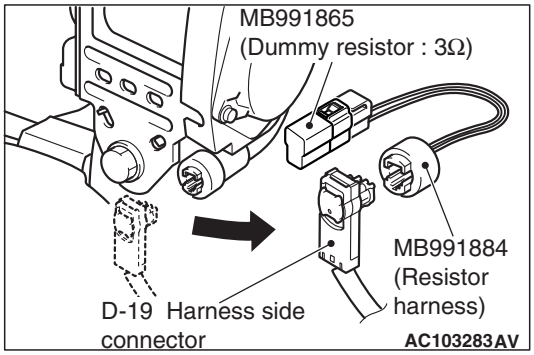

(3) Connect special tool dummy resistor (MB991865) to special tool resistor harness (MB991884).

(4) Connect special tool MB991884 to the D-19 harness side connector.

(5) Connect the negative battery terminal.

(6) Erase diagnosis code memory, and check the diagnosis code.

Q: Is diagnosis code B1472 set?

YES : Go to Step 4 .

NO : Replace the seat belt pre-tensioner (LH) (Refer to P.52B-350).

STEP 4. Check the seat belt pre-tensioner (LH) circuit. Resistance measurement at the SRS-ECU connector C-120.

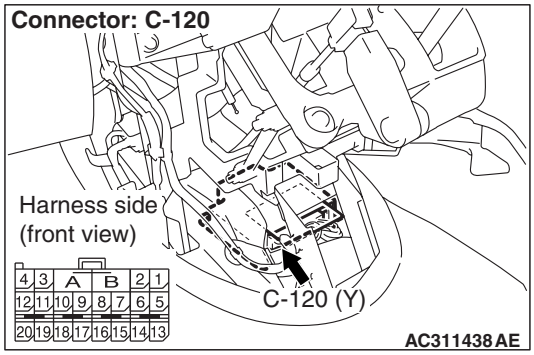

(1) Disconnect SRS-ECU connector C-120.

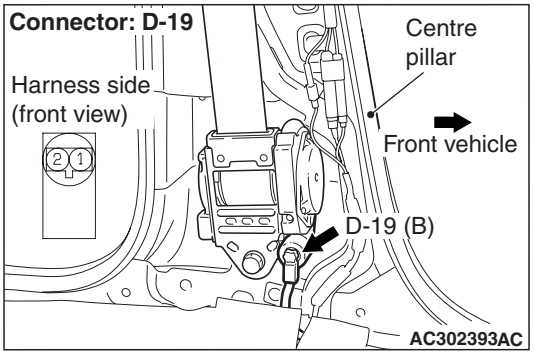

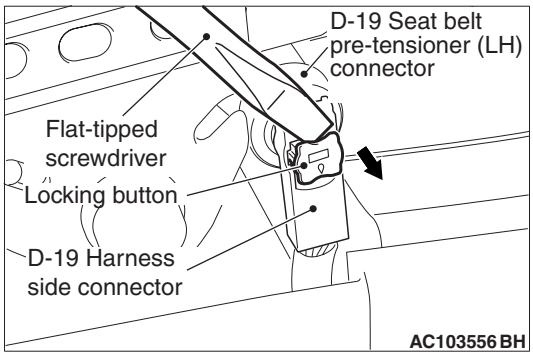

Main Index
Group TOC

(2) Disconnect seat belt pre-tensioner (LH) connector D-19. Use a flat-tipped screwdriver to unlock the locking button at the harness side connector by with drawing it toward you in two stages, and then disconnect the connector.

⚠ CAUTION

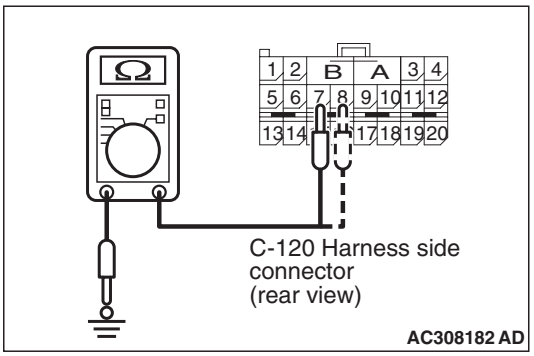

Do not insert a test probe into the terminal from its front side directly, as the connector contact pressure may be weakened.

(3) Check for continuity between C-120 harness side connector terminals 7, 8 and body earth.

OK: Open circuit

Q: Is the check result normal?
YES : Go to Step 5 .
NO : Repair the harness wires between SRS-ECU connector C-120 (terminal No.7 and 8) and seat belt pre-tensioner (LH) connector D-19 (terminal No.1 and 2).

STEP 5. Check whether the diagnosis code is reset.

Q: Is diagnosis code B1472 set?
YES : Replace the SRS-ECU (Refer to P.52B-332).
NO : An intermittent malfunction is suspected (Refer to GROUP 00, How to Use Troubleshooting/Inspection Service Points P.00-5).

Code No.B1473: Seat Belt Pre-Tensioner (LH) (Squib) System Fault for Power Supply Circuit (Short-Circuit to Power Supply)

Seat Belt Pre-Tensioner (LH) (Squib) Circuit

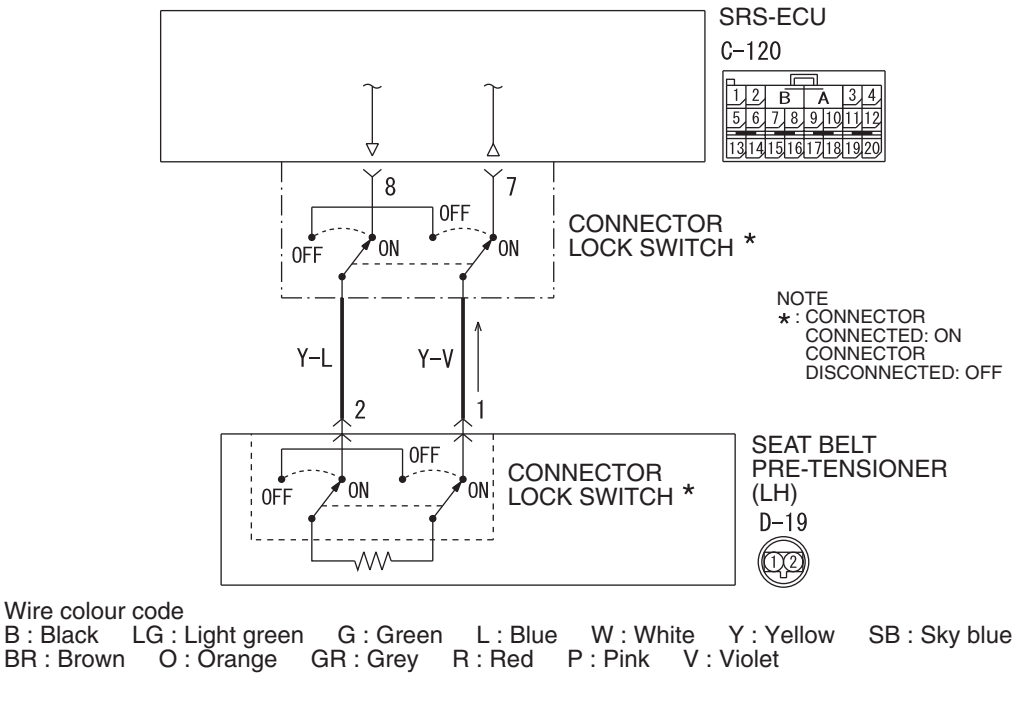

⚠ CAUTION

If diagnosis code B1473 is set in the SRS-ECU, always diagnose the CAN main bus line.

OPERATION

The SRS-ECU judges how severe a collision is by detecting signals from the front impact sensors and the front air bag analogue G-sensor. If the impact is over a predetermined level, the SRS-ECU sends an ignition signal. At this time, if the front air bag safing G-sensor is on, the pre-tensioner will deploy.

DIAGNOSIS CODE SET CONDITIONS

This diagnosis code is set if there is abnormal resistance between the input terminals of the seat belt pre-tensioner (LH) (squib).

TROUBLESHOOTING HITS

- Damaged wiring harnesses or connectors
- Short to the power supply in the seat belt pre-tensioner (LH) (squib) harness
- Malfunction of the SRS-ECU

DIAGNOSIS PROCEDURE

STEP 1. M.U.T.-III CAN bus diagnostics

Use the M.U.T.-III to diagnose the CAN bus lines.

Q: Is the check result normal?

YES : Go to Step 2 .

NO : Repair the CAN bus line (Refer to GROUP 54F, Diagnosis P.54F-13).

STEP 2. Check whether the diagnosis code is reset.

Check again if the diagnosis code is set.

(1) Erase the diagnosis code.

(2) Ignition: "LOCK" (OFF) position to "ON"

(3) On completion, check that the diagnosis code is not reset.

Q: Is the diagnosis code set?

YES : Go to Step 3 .

NO : Go to Step 5 .

STEP 3. Check the seat belt pre-tensioner (LH) (M.U.T.-III diagnosis code).

(1) Disconnect the negative battery terminal.

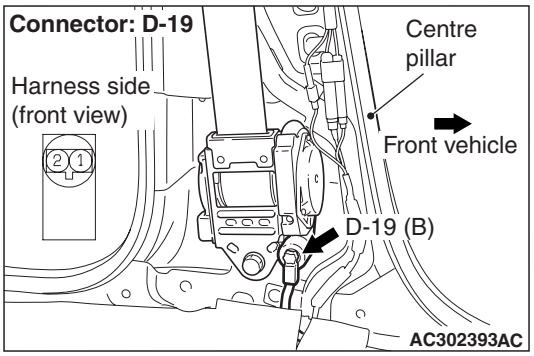

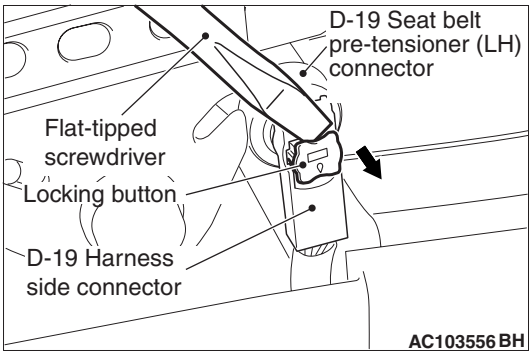

(2) Disconnect seat belt pre-tensioner (LH) connector D-19. Use a flat-tipped screwdriver to unlock the locking button at the harness side connector by with drawing it toward you in two stages, and then disconnect the connector.

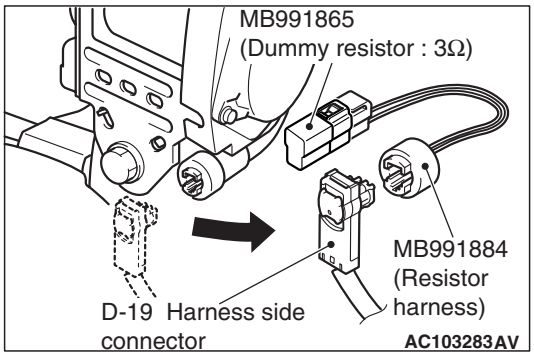

(3) Connect special tool dummy resistor (MB991865) to special tool resistor harness (MB991884).

(4) Connect special tool MB991884 to the D-19 harness side connector.

(5) Connect the negative battery terminal.

(6) Erase diagnosis code memory, and check the diagnosis code.

Q: Is diagnosis code B1473 set?

YES : Go to Step 4 .

NO : Replace the seat belt pre-tensioner (LH) (Refer to P.52B-350).

Main Index
Group TOC

STEP 4. Check the driver's seat belt pre-tensioner circuit. Voltage measurement at the SRS-ECU connector C-120.

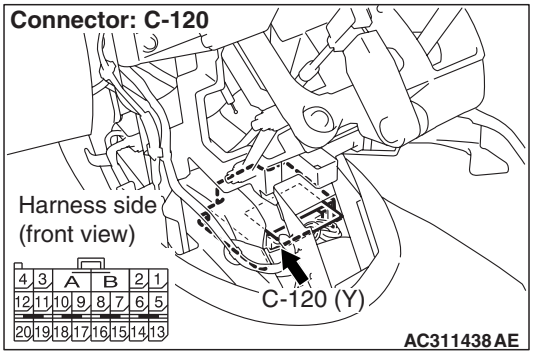

(1) Disconnect SRS-ECU connector C-120.

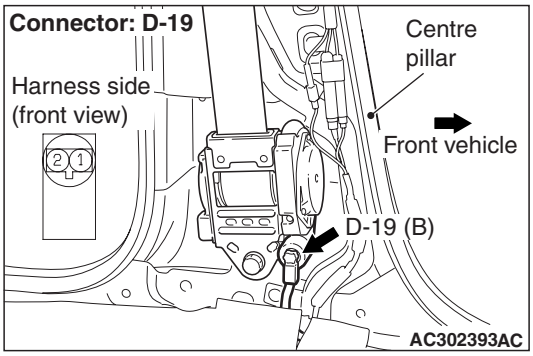

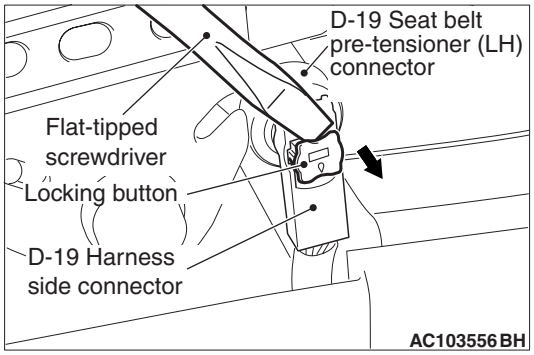

(2) Disconnect seat belt pre-tensioner (LH) connector D-19. Use a flat-tipped screwdriver to unlock the locking button at the harness side connector by with drawing it toward you in two stages, and then disconnect the connector.

(3) Turn the ignition switch to the "ON" position.

⚠ CAUTION

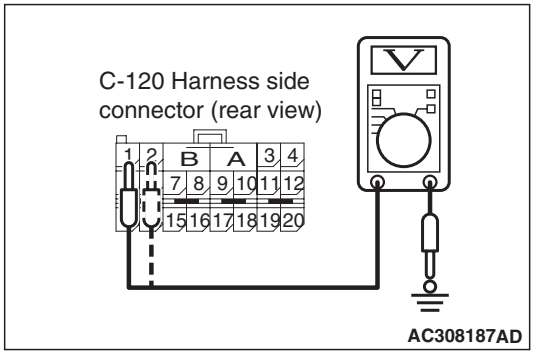

Do not insert a test probe into the terminal from its front side directly, as the connector contact pressure may be weakened.

(4) Measure the voltage between C-120 harness side connector terminals 7, 8 and body earth.

OK: 0 V

Q: Is the check result normal?

YES : Go to Step 5 .

NO : Repair the harness wires between SRS-ECU connector C-120 (terminal No.7 and 8) and seat belt pre-tensioner (LH) connector D-19 (terminal No.1 and 2).

STEP 5. Check whether the diagnosis code is reset.

Q: Is diagnosis code B1473 set?

YES : Replace the SRS-ECU (Refer to P.52B-332).

NO : An intermittent malfunction is suspected (Refer to GROUP 00, How to Use Troubleshooting/Inspection Service Points P.00-5).

Main Index
Group TOC

Code No.B1476: IG1 Power Supply Circuit System (Fuse No.2 Circuit)
Code No.B1477: IG1 Power Supply Circuit System (Fuse No.3 Circuit)

IG1 Power Supply Circuit

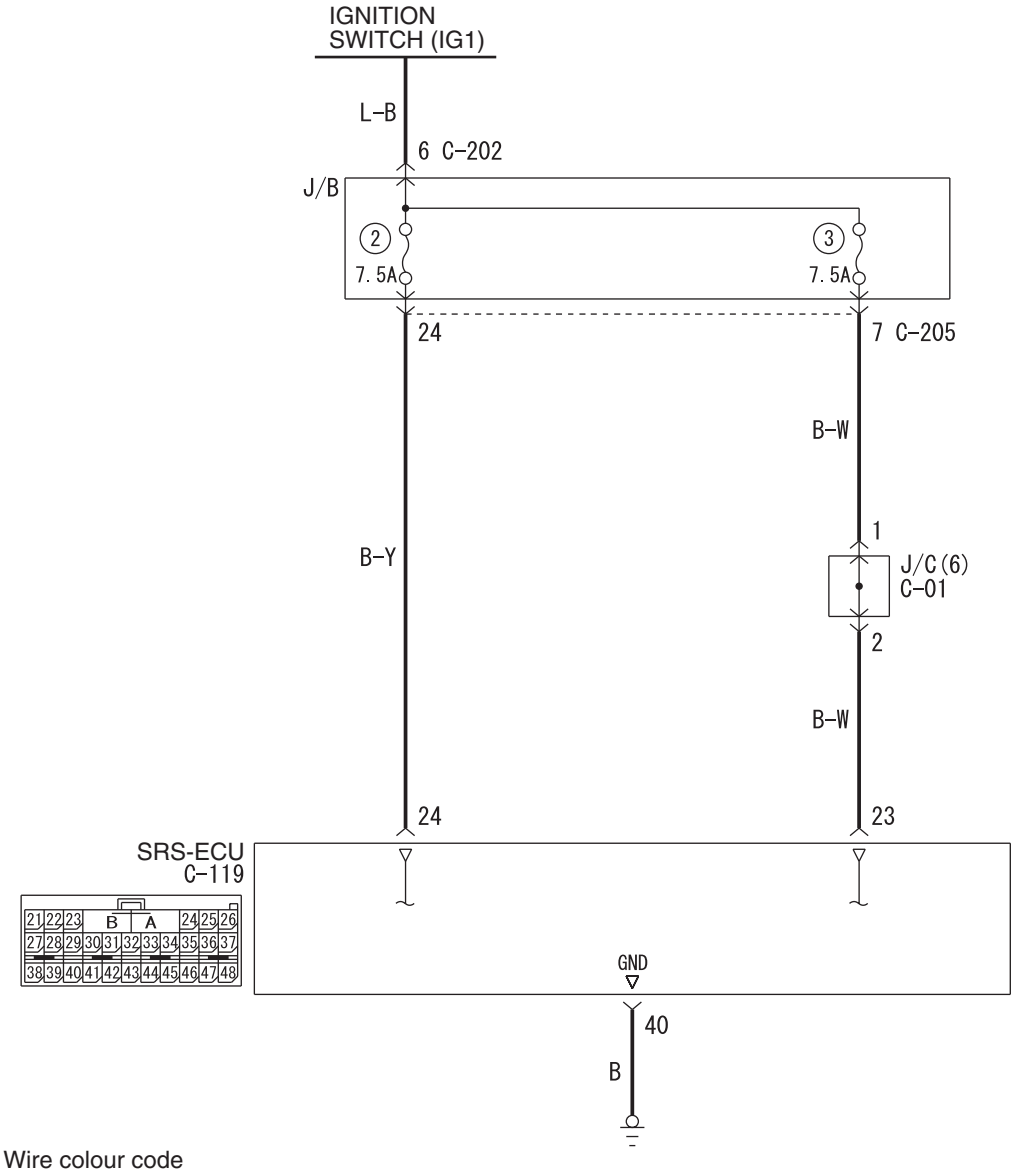

Wire colour code
B : Black LG : Light green G : Green L : Blue W : White Y : Yellow SB : Sky blue
BR : Brown O : Orange GR : Grey R : Red P : Pink V : Violet PU : Purple

W6X52X004A

⚠ CAUTION

If diagnosis code B1476 <Fuse No.2> or B1477 <Fuse No.3> is set in the combination meter, always diagnose the CAN bus lines.

OPERATION

- The SRS-ECU is powered from the ignition switch (IG1).
- The SRS-ECU power is supplied from two circuits. Even if one circuit is shut off, the air bag can inflate.

Main Index
Group TOC

DIAGNOSIS CODE SET CONDITIONS

This diagnosis code is set if the voltage between the IG1 terminals (fuse No.2 circuit or fuse No.3 circuit) and earth is lower than a predetermined value for a continuous period of 5 second or more. However, if the vehicle condition returns to normal, diagnosis code number B1476 <Fuse No.2> or B1477 <Fuse No.3> will be automatically erased, and the SRS warning light will switch off.

PROBABLE CAUSES

- Damaged wiring harnesses or connectors
- Malfunction of the SRS-ECU

DIAGNOSIS PROCEDURE

STEP 1. M.U.T.-III CAN bus diagnostics

Use the M.U.T.-III to diagnose the CAN bus lines.

Q: Is the check result normal?

YES : Go to Step 2 .

NO : Repair the CAN bus line (Refer to GROUP 54F, Diagnosis P.54F-13).

STEP 2. Check whether the diagnosis code is reset.

Check again if the diagnosis code is set.

(1) Erase the diagnosis code.
(2) Ignition: "LOCK" (OFF) position to "ON"
(3) On completion, check that the diagnosis code is not reset.

Q: Is the diagnosis code set?

YES : Go to Step 3.

NO : There is an intermittent malfunction such as poor engaged connector(s) or open circuit (Refer to GROUP 00, How to Cope with Intermittent Malfunction P.00-5).

STEP 3. Check junction block fuse number 2 <B1476> or 3 <B1477>.

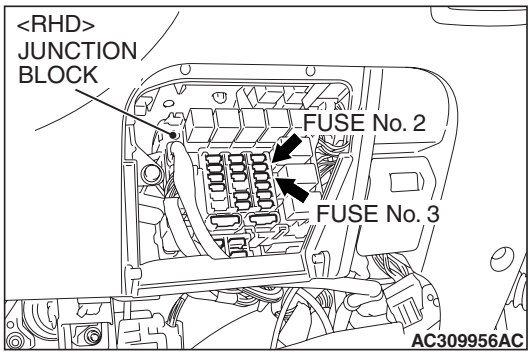

Q: Is the fuse burned out?

YES : Go to Step 6 .

NO : Go to Step 4 .

STEP 4. Check the power supply circuit for open circuit. Voltage measurement at SRS-ECU connector C-119.

(1) Disconnect the negative battery terminal.

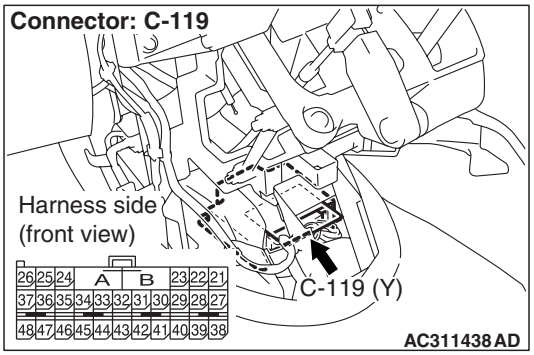

(2) Disconnect SRS-ECU connector C-119.

(3) Connect the negative battery terminal.

(4) Turn the ignition switch to the "ON" position.

⚠ CAUTION

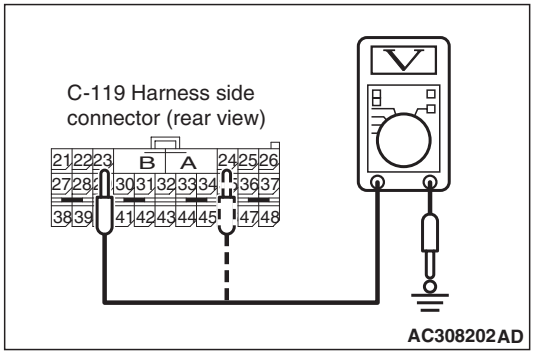

Do not insert a test probe into the terminal from its front side directly, as the connector contact pressure may be weakened.

(5) Measure the voltage between C-119 harness side connector terminal 24 <B1476> or 23 <B1477> and body earth.

OK: 9 V or more.

Q: Is the measured voltage within the specified range?

YES : Erase the diagnosis connector memory, and check the diagnosis code. If diagnosis code B1476 or B1477 set, replace the SRS-ECU (Refer to P.52B-332). Then go to Step 10 .

NO : Go to Step 5.

STEP 5. Connector check: SRS-ECU connector C-119, ignition switch connector C-307, joint connector C-01, junction block connector C-202 and C-205.

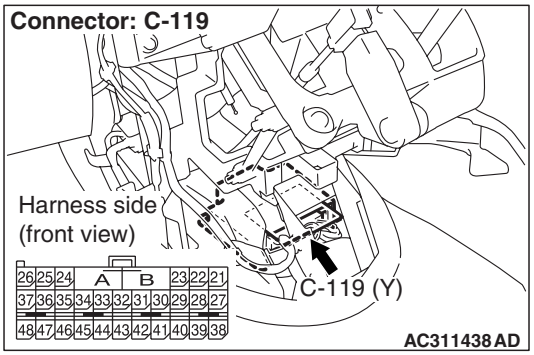

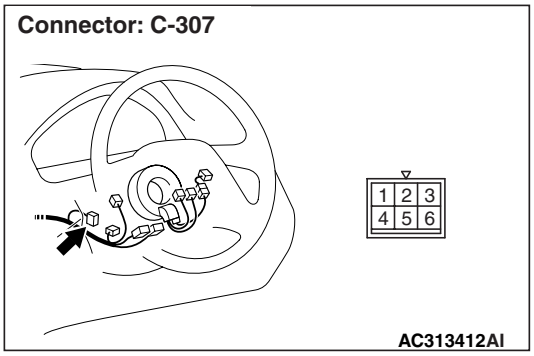

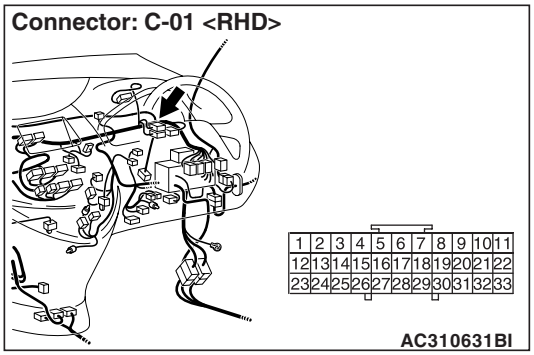

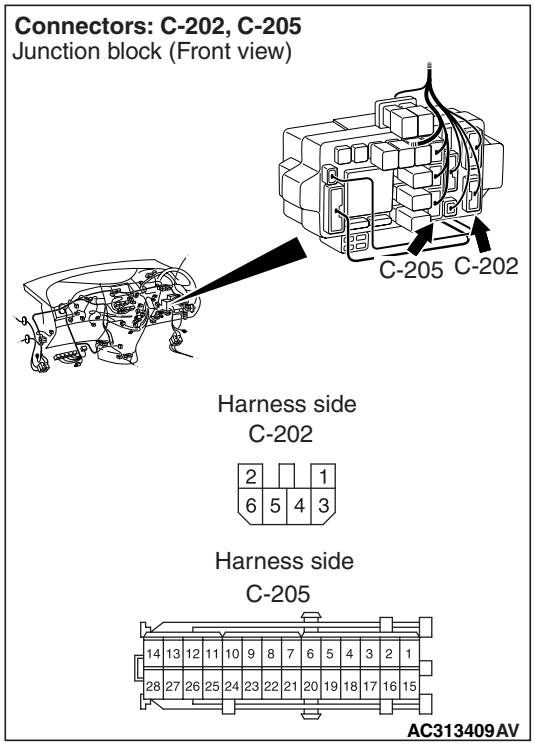

Q: Is the check result normal?

YES : Check the harness wire for open circuit between SRS-ECU connector C-119 (terminal No.24 <B1476> or terminal No.23 <B1477>) and the ignition switch connector C-307 (terminal No.2), and repair if necessary. Then go to Step 10 .

NO : Repair or replace it. Then go to Step 10 .

STEP 6. Check a burned-out fuse.

(1) Replace the fuse.
(2) Turn the ignition switch to the "ON" position, wait for at least one minute and then turn the ignition switch to the "LOCK" (OFF) position.
(3) Check the fuse.

Q: Is the fuse in good condition?

YES : Go to Step 10 .

NO : It is possible that the circuit using fuse No.2 <B1476> or No.3 <B1477> is shorted, go to Step 7 .

STEP 7. Check the SRS-ECU power supply circuit for short circuit to earth. Resistance measurement at the junction block connector C-205.

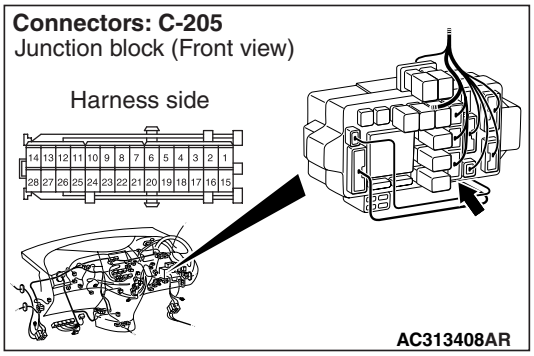

(1) Disconnect junction block connector C-205, and measure at the wiring harness side.

⚠ CAUTION

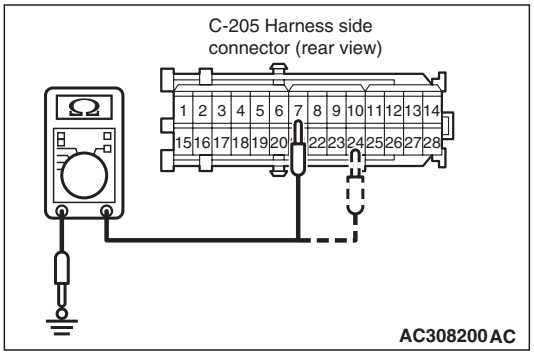

Do not insert a test probe into the terminal from its front side directly as the connector contact pressure may be weakened.

(2) Measure the resistance between terminal 24 <B1476> or 7 <B1477> and body earth.

OK: Open circuit

Q: Is the check result normal?

YES : Check the other circuit, which flows through fuse No.2 <B1476> or fuse No.3 <B1477>.Then go to Step 10 .

NO : Go to Step 8 .

STEP 8. Check the power supply circuit for short circuit to earth. Resistance measurement at the SRS-ECU connector C-119.

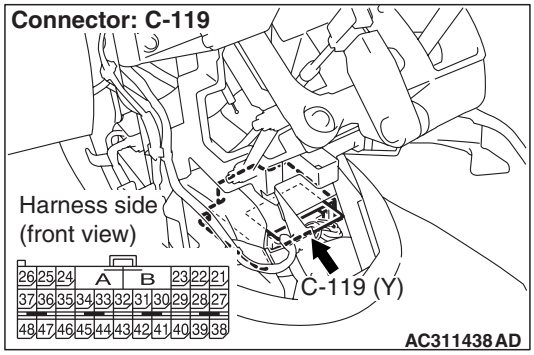

(1) Disconnect SRS-ECU connector C-119, and measure at the wiring harness side.

⚠ CAUTION

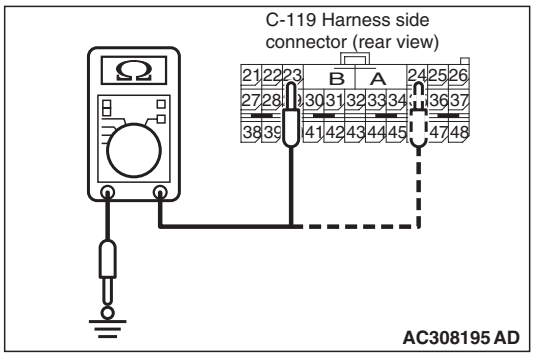

Do not insert a test probe into the terminal from its front side directly as the connector contact pressure may be weakened.

(2) Measure the resistance between terminal 24 <B1476> or 23 <B1477> and body earth.

OK: Open circuit

Q: Does continuity exist?

YES : Erase the diagnosis code memory, and check the diagnosis code. If diagnosis code B1476 or B1477 sets, replace the SRS-ECU (Refer to P.52B-332). Then go to Step 10 .

NO : Go to Step 9 .

Main Index
Group TOC

STEP 9. Connector check: SRS-ECU connector C-119, joint connector C-01 and junction block connector C-205.

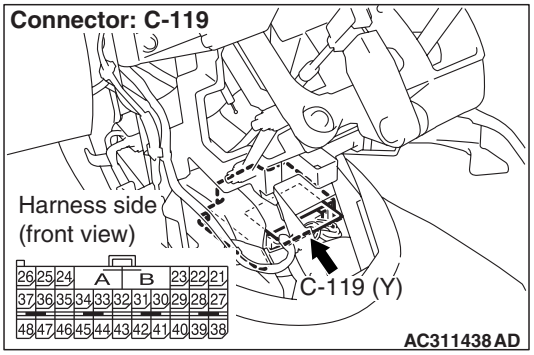

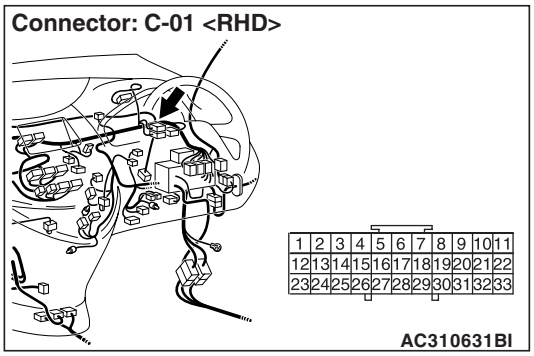

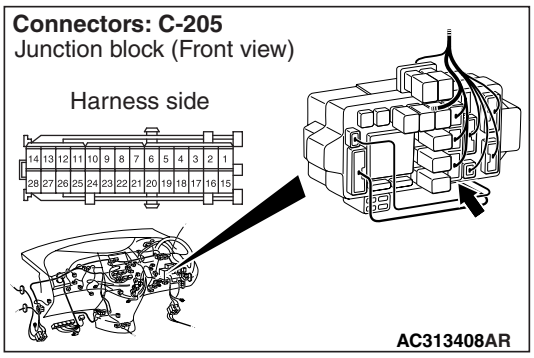

Q: Is the check result normal?

YES : . Check the harness wire for short circuit between SRS-ECU connector C-119 (terminal No.24 <B1476> or terminal No.23 <B1477>) and junction block connector C-205 (terminal No.24 <B1476> or terminal No.7 <B1477>), and repair if necessary. Then go to Step 10 .

NO : . Repair or replace it. Then go to Step 10 .

STEP 10. Check whether the diagnosis code is reset.

Q: Is diagnosis code B1476 or B1477 set?

YES : Return to Step 1.

NO : The procedure is complete.

Main Index
Group TOC

Code No. B1499: SRS-ECU Air Bag Condition Monitor Detects Deployed Air Bag

⚠ CAUTION

If diagnosis code B1499 is set in the SRS-ECU, always diagnose the CAN main bus line.

TROUBLE JUDGMENT

This diagnosis code is set after the air bag has deployed. If this diagnosis code is set before the air bag has deployed, the cause is probably a malfunction inside the SRS-ECU.

PROBABLE CAUSES

Malfunction of the SRS-ECU

DIAGNOSIS PROCEDURE

STEP 1. M.U.T.-III CAN bus diagnostics

Use the M.U.T.-III to diagnose the CAN bus lines.

Q: Is the check result normal?

YES : Go to Step 2.

NO : Repair the CAN bus line (Refer to GROUP 54F, Diagnosis P.54F-13).

STEP 2. Check whether the diagnosis code is reset.

Check again if the diagnosis code is set.

(1) Erase the diagnosis code.
(2) Ignition: "LOCK" (OFF) position to "ON"
(3) On completion, check that the diagnosis code is not reset.

Q: Is the diagnosis code B1499 set?

YES : Replace the SRS-ECU (Refer to P.52B-332).

NO : There is an intermittent malfunction such as poor engaged connector(s) or open circuit (Refer to GROUP 00, How to Cope with Intermittent Malfunction P.00-5).

Main Index
Group TOC

Code No.B1506: Seat Slide Sensor System Fault 1 (Open in the Seat Slide Sensor Circuit)

Seat Slide Sensor Circuit

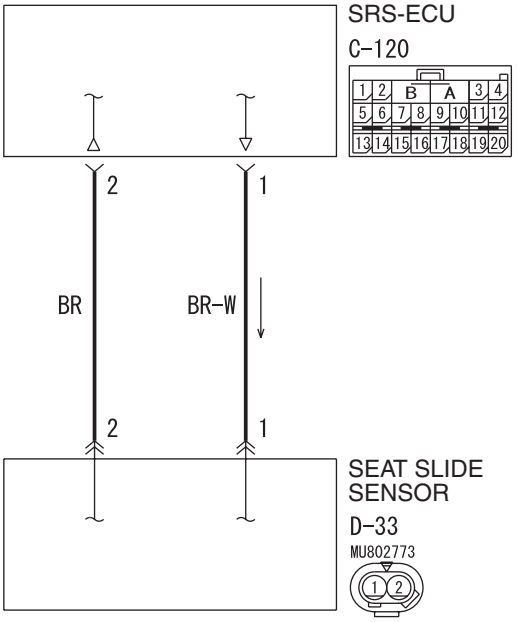

Wire colour code
B : Black LG : Light green G : Green L : Blue W : White Y : Yellow SB : Sky blue
BR : Brown O : Orange GR : Gray R : Red P : Pink V : Violet

W4X52X025A

⚠ CAUTION

If diagnosis code B1506 is set in the SRS-ECU, always diagnose the CAN main bus line.

OPERATION

- The seat slide sensor sets the current value Hi or Low determined by the seat position.
- The SRS-ECU determines the seat position according to the current value from the seat slide sensor.

DIAGNOSIS CODE SET CONDITIONS

- This diagnosis code is set if there is abnormal resistance between the input terminals of the seat slide sensor. The most likely causes for this code to be set are the followings:
  - Open circuit in the seat slide sensor or harness
  - Malfunction of connector contact

However, if no diagnosis code reset, the SRS warning lamp will be switched off (diagnosis code will be retained).

PROBABLE CAUSES

- Open circuit in the seat slide sensor circuit
- Disengaged seat slide sensor connector
- Improper connector contact
- Malfunction of the SRS-ECU

DIAGNOSIS PROCEDURE

STEP 1. M.U.T.-III CAN bus diagnostics

Use the M.U.T.-III to diagnose the CAN bus lines.

Q: Is the check result normal?

YES : Go to Step 2 .

NO : Repair the CAN bus line (Refer to GROUP 54F, Diagnosis P.54F-13).

STEP 2. Check whether the diagnosis code is reset.

Check again if the diagnosis code is set.
(1) Erase the diagnosis code.
(2) Ignition: "LOCK" (OFF) position to "ON"
(3) On completion, check that the diagnosis code is not reset.

Q: Is the diagnosis code set?
YES : Go to Step 3 .
NO : There is an intermittent malfunction such as poor engaged connector(s) or open circuit (Refer to GROUP 00, How to Cope with Intermittent Malfunction P.00-5).

STEP 3. Check the harness between the SRS-ECU connector C-120 (terminal No.1 and 2) and the seat slide sensor connector D-33 (terminal No.1 and 2) for open circuit.

(1) Disconnect SRS-ECU connector C-120 and seat slide sensor connector D-33.

⚠ CAUTION

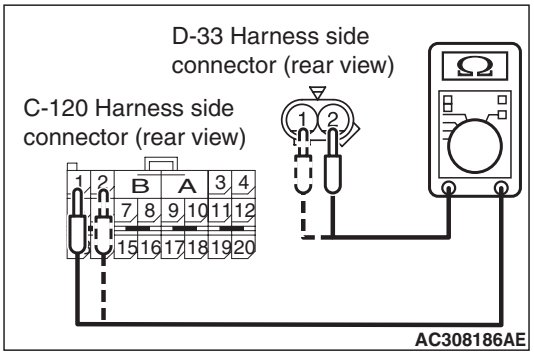

Do not insert a test probe into the terminal from its front side directly as the connector contact pressure may be weakened.

(2) Check for continuity between the following terminals.
- SRS-ECU connector C-120 (terminal No.1) and the seat slide sensor connector D-33 (terminal No.1)
- SRS-ECU connector C-120 (terminal No.2) and the seat slide sensor connector D-33 (terminal No.2)

OK: Less than 2 Ω

Q: Are the check results normal?
YES : Erase the diagnosis code memory, and check the diagnosis code. If diagnosis code B1506 sets, replace the SRS-ECU (Refer to P.52B-332). Then go to Step 4 .
NO : Repair the harness wires between SRS-ECU connector C-120 and seat slide sensor connector D-33. Then go to Step 4 .

STEP 4. Check whether the diagnosis code is reset.

Q: Is diagnosis code B1506 set?
YES : Return to Step 1 .
NO : The procedure is complete.

Main Index
Group TOC

Code No.B1507: Seat Slide Sensor System Fault Earth Circuit (Short-Circuited to Earth)

Seat Slide Sensor Circuit

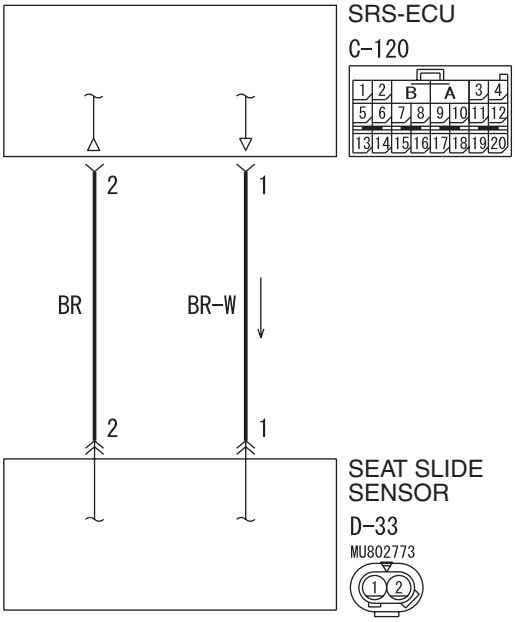

Wire colour code
B : Black LG : Light green G : Green L : Blue W : White Y : Yellow SB : Sky blue
BR : Brown O : Orange GR : Gray R : Red P : Pink V : Violet

W4X52X025A

⚠ CAUTION

If diagnosis code B1507 is set in the SRS-ECU, always diagnose the CAN bus lines.

OPERATION

- The seat slide sensor sets the current value Hi or Low determined by the seat position.
- The SRS-ECU determines the seat position according to the current value from the seat slide sensor.

DIAGNOSIS CODE SET CONDITIONS

This diagnosis code is set if there is abnormal resistance between the input terminals of the seat slide sensor.

PROBABLE CAUSES

- Damaged wiring harnesses or connectors
- Short to earth in the seat slide sensor harness
- Malfunction of the SRS-ECU

DIAGNOSIS PROCEDURE

STEP 1. M.U.T.-III CAN bus diagnostics

Use the M.U.T.-III to diagnose the CAN bus lines.

Q: Is the check result normal?

YES : Go to Step 2 .

NO : Repair the CAN bus line (Refer to GROUP 54F, Diagnosis P.54F-13).

STEP 2. Check whether the diagnosis code is reset.

Check again if the diagnosis code is set.

(1) Erase the diagnosis code.
(2) Ignition: "LOCK" (OFF) position to "ON"
(3) On completion, check that the diagnosis code is not reset.

Q: Is the diagnosis code set?

YES : Go to Step 3 .

NO : There is an intermittent malfunction such as poor engaged connector(s) or open circuit (Refer to GROUP 00, How to Cope with Intermittent Malfunction P.00-5).

STEP 3. Check the seat slide sensor circuit at the SRS-ECU connector C-120.

(1) Disconnect SRS-ECU connector C-120.
(2) Turn the ignition switch to the "ON" position.

⚠ CAUTION

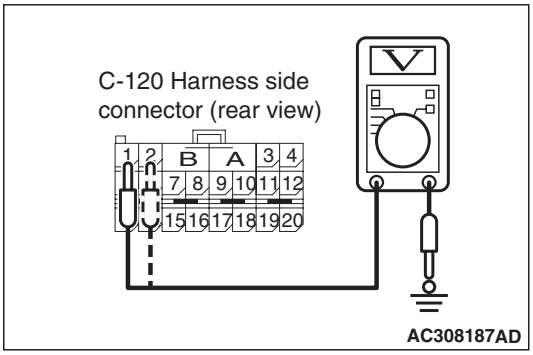

Do not insert a test probe into the terminal from its front side directly as the connector contact pressure may be weakened.

(3) Measure the voltage between C-120 harness side connector terminals 1 and 2 and body earth.

OK: 0 V

Q: Is the check result normal?

YES : . Erase the diagnosis code memory, and check the diagnosis code. If diagnosis code B1507 sets, replace the SRS-ECU (Refer to P.52B-332). Then go to Step 5 .

NO : . Go to Step 4 .

STEP 4. Check the harness wires for short circuit to power supply between SRS-ECU connector C-120 (terminal No.1 and 2) and seat slide sensor connector D-33 (terminal No.1 and 2).

Q: Are the harness wires between SRS-ECU connector C-120 (terminal No.1 and 2) and seat slide sensor connector D-33 (terminal No.1 and 2) in good condition?

YES : Go to Step 5 .

NO : Repair the harness wires between SRS-ECU connector C-120 and seat slide sensor connector D-33. Then go to Step 5 .

STEP 5. Check whether the diagnosis code is reset.

Q: Is diagnosis code B1507 set?

YES : Return to Step 1 .

NO : The procedure is complete.

Main Index
Group TOC

Code No.B1508: Seat Slide Sensor System Fault Power Supply Circuit (Short-Circuited to Power Supply)

Seat Slide Sensor Circuit

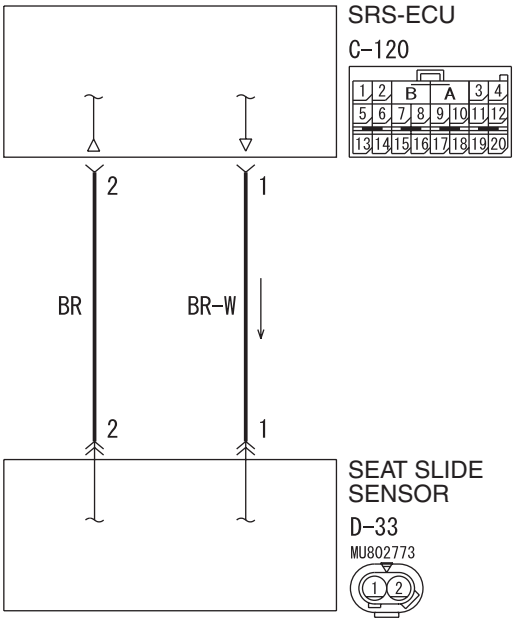

Wire colour code
B : Black LG : Light green G : Green L : Blue W : White Y : Yellow SB : Sky blue
BR : Brown O : Orange GR : Gray R : Red P : Pink V : Violet

W4X52X025A

⚠ CAUTION
If diagnosis code B1508 is set in the SRS-ECU, always diagnose the CAN bus lines.

OPERATION

- The seat slide sensor sets the current value Hi or Low determined by the seat position.
- The SRS-ECU determines the seat position according to the current value from the seat slide sensor.

DIAGNOSIS CODE SET CONDITIONS

This diagnosis code is set if there is abnormal resistance between the input terminals of the seat slide sensor.

PROBABLE CAUSES

- Damaged wiring harnesses or connectors
- Short to the power supply in the seat slide sensor harness
- Malfunction of the SRS-ECU

DIAGNOSIS PROCEDURE

STEP 1. M.U.T.-III CAN bus diagnostics
Use the M.U.T.-III to diagnose the CAN bus lines.

Q: Is the check result normal?
YES : Go to Step 2 .
NO : Repair the CAN bus line (Refer to GROUP 54F, Diagnosis P.54F-13).

STEP 2. Check whether the diagnosis code is reset.
Check again if the diagnosis code is set.
(1) Erase the diagnosis code.
(2) Ignition: "LOCK" (OFF) position to "ON"
(3) On completion, check that the diagnosis code is not reset.

Q: Is the diagnosis code set?
YES : Go to Step 3.
NO : There is an intermittent malfunction such as poor engaged connector(s) or open circuit (Refer to GROUP 00, How to Cope with Intermittent Malfunction P.00-5).

STEP 3. Check the seat slide sensor circuit at the SRS-ECU connector C-120.

(1) Disconnect SRS-ECU connector C-120.

⚠ CAUTION

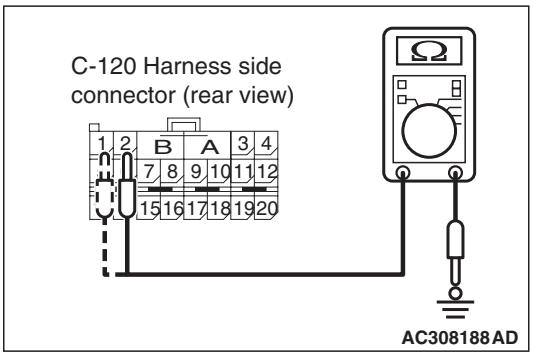

Do not insert a test probe into the terminal from its front side directly as the connector contact pressure may be weakened.

(2) Check for continuity between C-120 harness side connector terminals 1, 2 and body earth.

OK: Open circuit

Q: Is the check result normal?

YES : . Erase the diagnosis code memory, and check the diagnosis code. If diagnosis code B1508 sets, replace the SRS-ECU (Refer to P.52B-332). Then go to Step 5 .

NO : . Go to Step 4 .

STEP 4. Check the harness wires for short circuit to earth between SRS-ECU connector C-120 (terminal No.1 and 2) and seat slide sensor connector D-33 (terminal No.1 and 2).

Q: Are the harness wires between SRS-ECU connector C-120 (terminal No.1 and 2) and seat slide sensor connector D-33 (terminal No.1 and 2) in good condition?

YES : Go to Step 5 .

NO : Repair the harness wires between SRS-ECU connector C-120 and seat slide sensor connector D-33. Then go to Step 5 .

STEP 5. Check whether the diagnosis code is reset.

Q: Is diagnosis code B1508 set?

YES : Return to Step 1 .

NO : The procedure is complete.

Main Index
Group TOC

Code No.B1509: Improper installation of SRS-ECU

⚠ CAUTION
If diagnosis code B1509 is set in the SRS-ECU, always diagnose the CAN main bus line.

DIAGNOSIS CODE SET CONDITIONS

This code is set when the vehicle specification does not meet the ECU specification.

PROBABLE CAUSES

- Malfunction of the SRS-ECU
- Mismatch between vehicle and SRS-ECU specifications

DIAGNOSIS PROCEDURE

STEP 1. M.U.T.-III CAN bus diagnostics
Use the M.U.T.-III to diagnose the CAN bus lines.

Q: Is the check result normal?
YES : Go to Step 2.
NO : Repair the CAN bus line (Refer to GROUP 54F, Diagnosis P.54F-13).

STEP 2. Check whether the diagnosis code is reset.
Check again if the diagnosis code is set.
(1) Erase the diagnosis code.
(2) Ignition: "LOCK" (OFF) position to "ON"
(3) On completion, check that the diagnosis code is not reset.

Q: Is the diagnosis code B1509 set?
YES : Replace the SRS-ECU (Refer to P.52B-332).
NO : There is an intermittent malfunction such as poor engaged connector(s) or open circuit (Refer to GROUP 00, How to Cope with Intermittent Malfunction P.00-5).

Code No. B1519: Connector Lock System Detects Connector Unlocked

⚠ CAUTION
If diagnosis code B1519 is set in the SRS-ECU, always diagnose the CAN main bus line.

DIAGNOSIS CODE SET CONDITIONS

This diagnosis code is set if a poor connection at the SRS-ECU is detected. However, if the vehicle condition returns to normal, diagnosis code number B1519 will be automatically erased, and the SRS warning lamp will go out.

PROBABLE CAUSES

- Damaged connectors
- Malfunction of the SRS-ECU

DIAGNOSIS

STEP 1. M.U.T.-III CAN bus diagnostics
Use the M.U.T.-III to diagnose the CAN bus lines.

Q: Is the check result normal?
YES : . Go to Step 2.
NO : . Repair the CAN bus line (Refer to GROUP 54F, Diagnosis P.54F-13).

STEP 2. Check whether the diagnosis code is reset.
Check again if the diagnosis code is set.
(1) Erase the diagnosis code.
(2) Ignition: "LOCK" (OFF) position to "ON"
(3) On completion, check that the diagnosis code is not reset.

Q: Is the diagnosis code set?
YES : Go to Step 3.
NO : . There is an intermittent malfunction such as poor engaged connector(s) or open circuit (Refer to GROUP 00, How to Cope with Intermittent Malfunction P.00-5).

STEP 3. Connector check: SRS-ECU connector C-118, C-119 and C-120.

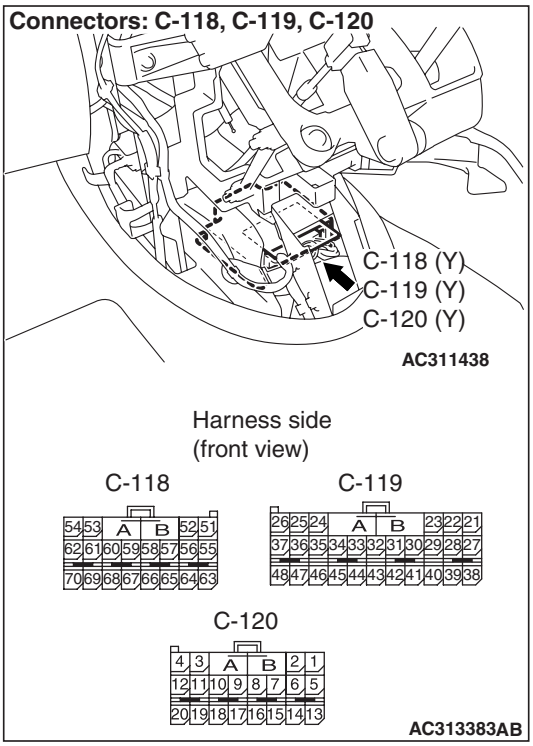

Q: Are connectors correctly engaged?
YES : Go to Step 4.
NO : Engage the connectors correctly. Then go to Step 5.

STEP 4. Connector check: SRS-ECU connector C-118, C-119 and C-120.

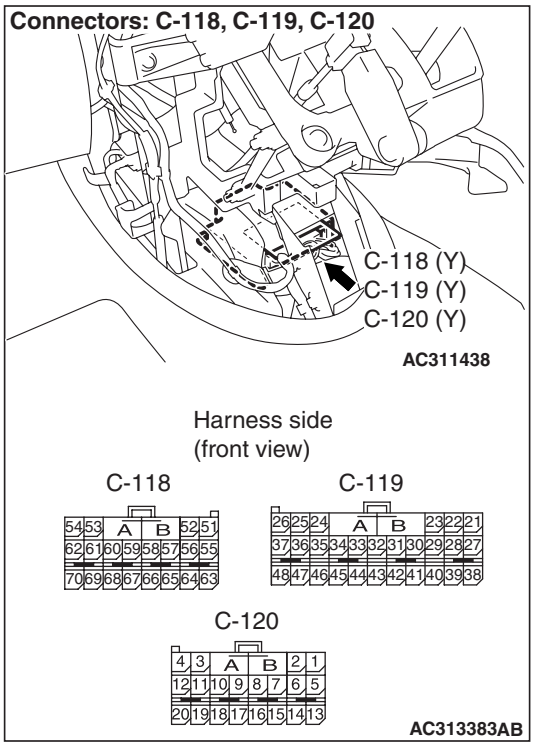

(1) Disconnect SRS-ECU connectors C-118, C-119 and C-120.

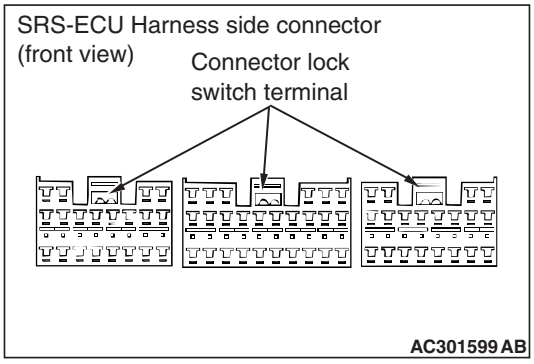

(2) Check the connector lock switch terminal inside the harness side connector for improper contact or deformation.

Q: Are the SRS-ECU connector C-118, C-119 and C-120 in good condition?
YES : Erase the diagnosis code memory, and check the diagnosis code. If diagnosis code B1519 sets, replace the SRS-ECU (Refer to P.52B-332). Then go to Step 5.
NO : Replace the SRS-ECU connector C-118, C-119 and C-120. Then go to Step 5.

Main Index
Group TOC

STEP 5. Check whether the diagnosis code is reset.

Q: Is diagnosis code B1519 set?
YES : There is no action to be taken.
NO : . The procedure is complete (If no malfunctions are found in all steps, an intermittent malfunction is suspected). Refer to GROUP 00, How to Use Troubleshooting/Inspection Service Points P.00-5.

Code No.B1556: Seat Slide Sensor System for Fault 2 (Malfunction of Seat Slide Sensor)

⚠ CAUTION
If diagnosis code B1556 is set in the SRS-ECU, always diagnose the CAN main bus line.

DIAGNOSIS CODE SET CONDITIONS

These diagnosis codes are set if the following conditions are detected from the seat slide sensor output:

- Seat slide sensor is not operating.
- Seat slide sensor characteristics are abnormal.
- Seat slide sensor output is abnormal.

PROBABLE CAUSES

Malfunction of seat slide sensor

DIAGNOSIS

STEP 1. M.U.T.-III CAN bus diagnostics
Use the M.U.T.-III to diagnose the CAN bus lines.

Q: Is the check result normal?
YES : Go to Step 2.
NO : Repair the CAN bus line (Refer to GROUP 54F, Diagnosis P.54F-13).

STEP 2. Check whether the diagnosis code is reset.
Check again if the diagnosis code is set.
(1) Erase the diagnosis code.
(2) Ignition: "LOCK" (OFF) position to "ON"
(3) On completion, check that the diagnosis code is not reset.

Q: Is the diagnosis code set?
YES : Go to Step 3.
NO : There is an intermittent malfunction such as poor engaged connector(s) or open circuit (Refer to GROUP 00, How to Cope with Intermittent Malfunction P.00-5).

STEP 3. Check the seat slide sensor. (M.U.T.-III diagnosis code.)
Replace seat slide sensor (Refer to P.52B-353).
Check the diagnosis code.

Q: Is either diagnosis code B1556 set?
YES : Replace the SRS-ECU (Refer to P.52B-332).
NO : The procedure is complete.

Main Index
Group TOC

Code No.U1073: Bus Off

⚠ CAUTION
If diagnosis code U1073 is set in the SRS-ECU, diagnose the CAN main bus line.

⚠ CAUTION
Whenever the ECU is replaced, ensure that the input and output signal circuits are normal.

TROUBLE JUDGMENT

Diagnosis code No.U1073 will be stored when the SRS-ECU ceases CAN communication (bus off) and then resumes the communication by turning the ignition switch to the "LOCK" (OFF) position

COMMENTS ON TROUBLE SYMPTOM

The wiring harness wire or connectors may have loose, corroded, or damage terminals, or terminals pushed back in the connector, or the SRS-ECU may be defective.

PROBABLE CAUSES

- Defective connector(s) or wiring harness
- Malfunction of the SRS-ECU

DIAGNOSIS PROCEDURE

STEP 1. M.U.T.-III CAN bus diagnostics
Use the M.U.T.-III to diagnose the CAN bus lines.

Q: Is the check result normal?
YES : Go to Step 2.
NO : Repair the CAN bus line (Refer to GROUP 54F, Diagnosis P.54F-13).

STEP 2. Check whether the diagnosis code is reset.
Check again if the diagnosis code is set.
(1) Erase the diagnosis code.
(2) Ignition: "LOCK" (OFF) position to "ON"
(3) On completion, check that the diagnosis code is not reset.

Q: Is the check result satisfactory?
YES : There is an intermittent malfunction such as poor engaged connector(s) or open circuit (Refer to GROUP 00, How to Use Troubleshooting/Inspection Service Points P.00-5.)
NO : Replace the SRS-ECU. On completion, check that the diagnosis code is not reset.

CHECK CHART FOR TROUBLE SYMPTOMS

M1524003400882

Trouble	Inspection procedure No.	Reference page
Communication between the M.U.T.-III and the SRS-ECU is not possible.	1	P.52B-317
Power supply circuit system	2	P.52B-318
When the ignition switch is turned to the "ON" position (engine stopped), the SRS warning lamp does not illuminate.	3	P.52B-321
After the ignition switch is turned to the "ON" position, the SRS warning lamp does not go off within approximately seven seconds.	4	P.52B-321

Main Index
Group TOC

SYMPTOM PROCEDURES

Inspection Procedure 1: Communication between M.U.T.-III and the SRS-ECU is not possible.

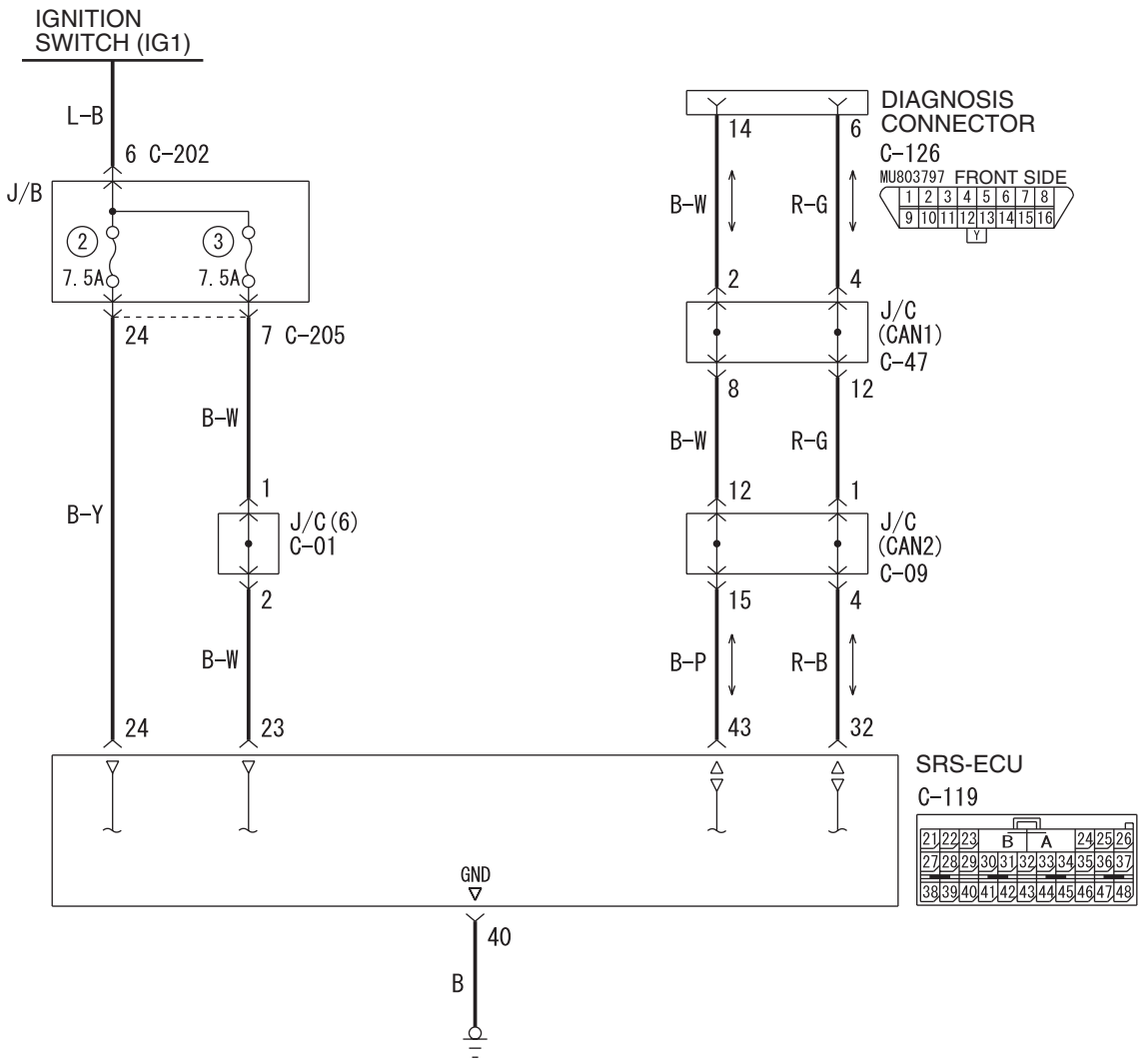

Wire colour code
B : Black LG : Light green G : Green L : Blue W : White Y : Yellow SB : Sky blue
BR : Brown O : Orange GR : Grey R : Red P : Pink V : Violet PU : Purple

W6X52X005A

COMMENTS ON TROUBLE SYMPTOM

If the M.U.T.-III can not communicate with the SRS system, the CAN bus lines may be defective. If the SRS system does not work, the SRS-ECU or its power supply circuit may be defective.

PROBABLE CAUSES

- Damaged wiring harness or connector
- Malfunction of the SRS-ECU

DIAGNOSIS PROCEDURE

STEP 1. M.U.T.-III CAN bus diagnostics

Use the M.U.T.-III to diagnose the CAN bus lines.

Q: Is the check result normal?

YES : Check and repair the power supply circuit system (Refer to P.52B-318).

NO : Repair the CAN bus lines (Refer to GROUP 54F, Diagnosis-P.54F-13).

Main Index
Group TOC

INSPECTION PROCEDURE 2: Power Supply Circuit System

IG1 Power Supply Circuit

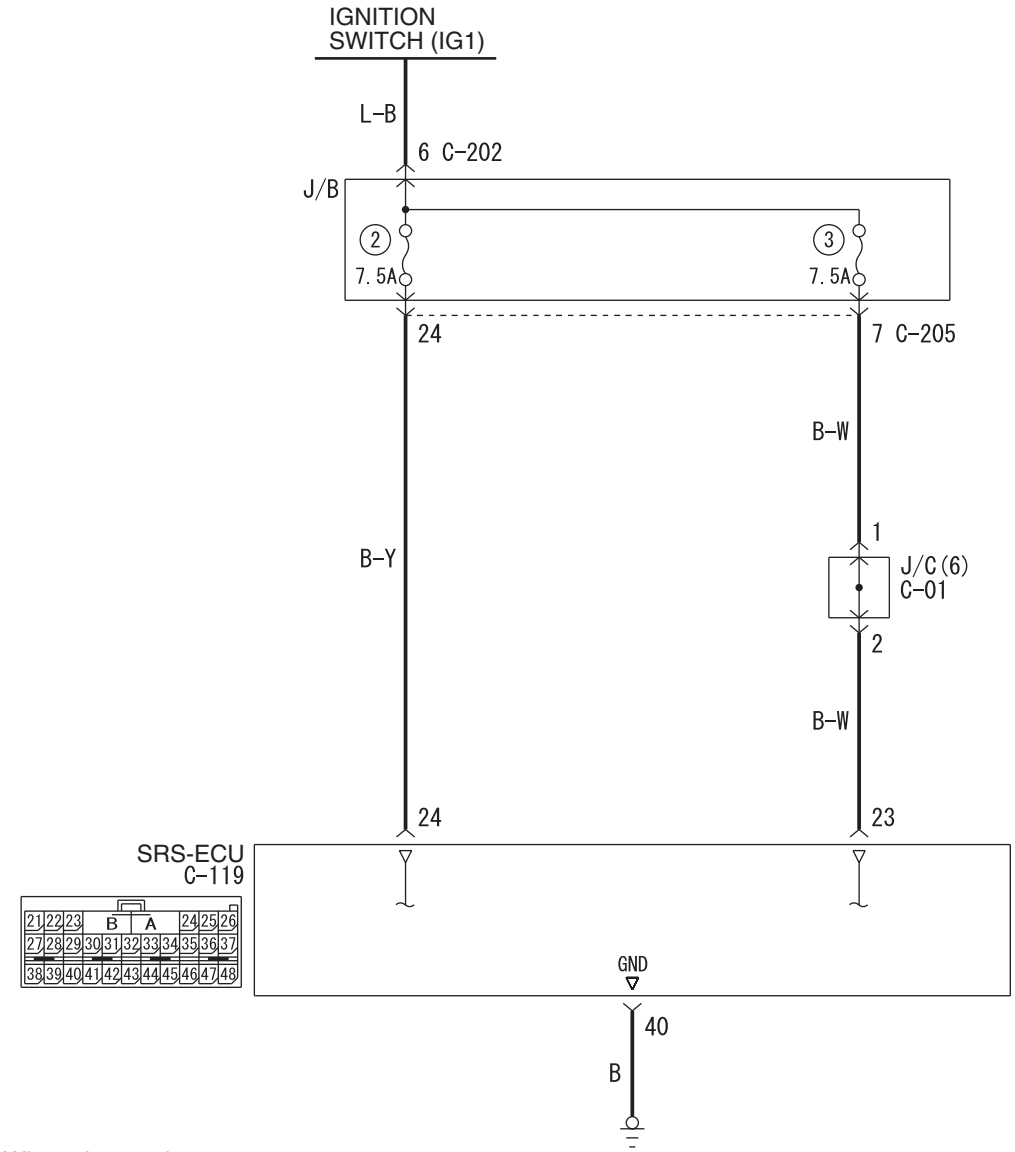

Wire colour code
B : Black LG : Light green G : Green L : Blue W : White Y : Yellow SB : Sky blue
BR : Brown O : Orange GR : Grey R : Red P : Pink V : Violet PU : Purple

W6X52X004A

OPERATION

- The SRS-ECU is energized by the ignition switch (IG1) through multi-purpose fuse 2 and the SRS-ECU terminal 24 and multi-purpose fuse 3 and the SRS-ECU terminal 23.
- If the power supply to the SRS-ECU has failed, M.U.T.-III will not be able to communicate with it.

PROBABLE CAUSES

- Damaged wiring harness or connector
- Defective battery
- Charging system failed
- Malfunction of the SRS-ECU

Main Index
Group TOC

DIAGNOSIS PROCEDURE

STEP 1. Resistance measurement at SRS-ECU connector C-119.

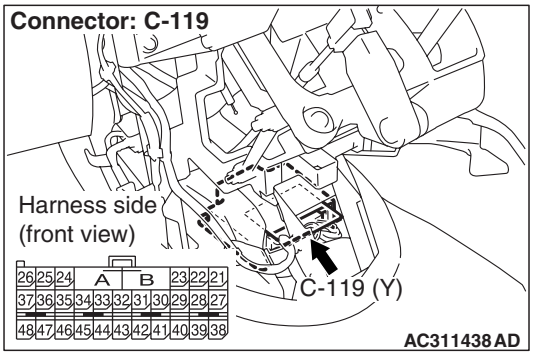

(1) Disconnect the connector C-119.

⚠ CAUTION

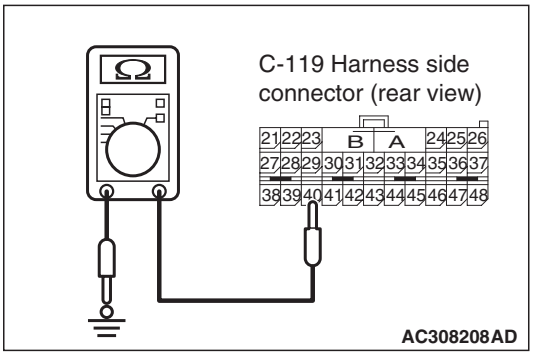

Do not insert a test probe into the terminal from its front side directly, as the connector contact pressure may be weakened.

(2) Check for continuity between C-119 harness side connector terminals 40 and body earth.

OK: Less than 2 Ω

Q: Is the check results normal?

YES : Then go to Step 2 .

NO : Repair the wiring harness between SRS-ECU connector C-119 terminals 40 and the body earth.

STEP 2. Check the harness wires for short circuit to earth between SRS-ECU connector C-119 (terminal No.23 and 24) and ignition switch connector C-307 (terminal No.2).

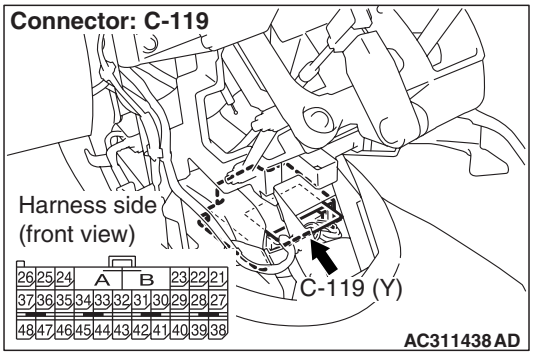

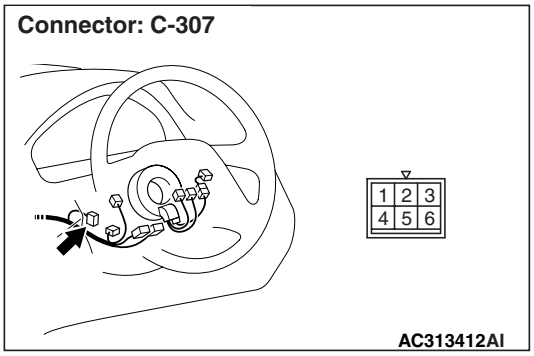

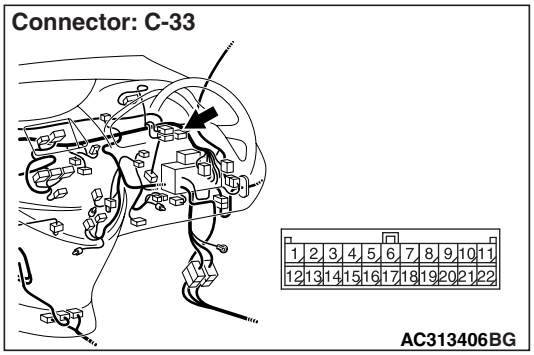

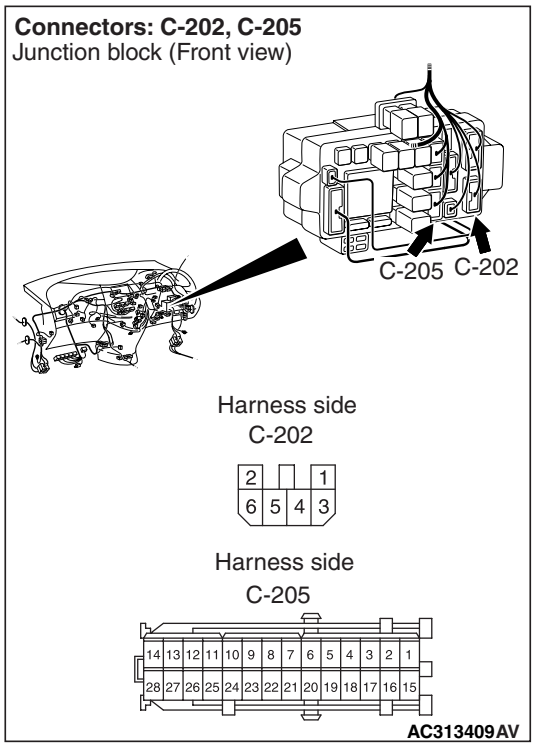

NOTE: After inspecting intermediate connectors C-202, C-33 and C-205 inspect the wiring harness. If intermediate connectors C-202, C-33 and C-205 are damaged, repair or replace them.

Q: Are the harness wires between SRS-ECU connector C-119 (terminal No.23 and 24) and ignition switch connector C-307 (terminal No.2) in good condition?

YES : . Go to Step 3 .

NO : . Replace the harness wires between SRS-ECU connector C-119 and ignition switch connector C-307.

STEP 3. Retest the system.

Q: Can the SRS-ECU communicate with the M.U.T.-III?

YES : It can be assumed that this malfunction is intermittent. Refer to GROUP 00, How to Use Troubleshooting/Inspection Service Points –How to Cope with Intermittent Malfunction P.00-5.

NO : . Replace the SRS-ECU (Refer to P.52B-332).

Main Index
Group TOC

Inspection Procedure 3: When the Ignition Switch is Turned to "ON" Position (Engine Stopped), the SRS Warning Lamp does not Illuminate.
INSPECTION PROCEDURE 4: After the Ignition Switch is Turned to the "ON" Position, the SRS Warning Lamp does not Go Off within Approximately Seven Seconds.

SRS Warning Lamp Circuit

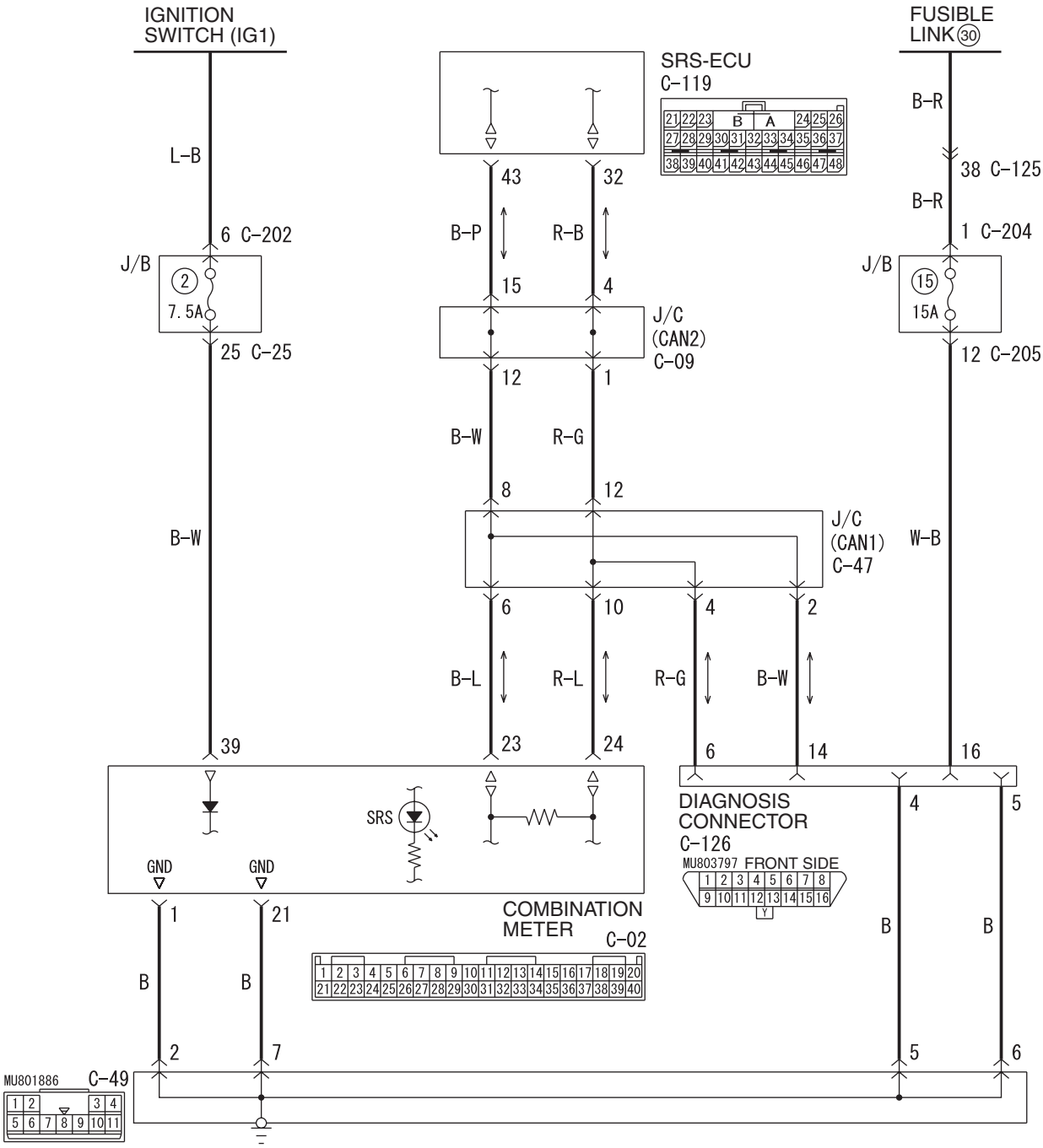

Wire colour code
B : Black LG : Light green G : Green L : Blue W : White Y : Yellow SB : Sky blue
BR : Brown O : Orange GR : Grey R : Red P : Pink V : Violet PU : Purple

W6X52X006A

Main Index
Group TOC

TECHNICAL DESCRIPTION (COMMENT)

- The SRS-ECU sends the SRS warning lamp signal to the combination meter via the CAN communication.
- This may be caused by faults in the CAN bus line, the combination meter or the SRS-ECU.

PROBABLE CAUSES

- Damaged wiring harness or connector
- Combination meter defect
- Malfunction of the SRS-ECU

DIAGNOSIS PROCEDURE

STEP 1. M.U.T.-III CAN bus diagnostics

Use the M.U.T.-III to diagnose the CAN bus lines.

Q: Is the check result normal?

YES : Replace the SRS-ECU (Refer toP.52B-332).

NO : Repair the CAN bus lines (Refer to GROUP 54F, Diagnosis P.54F-13).

DATA LIST REFERENCE TABLE

M1524003500083

The following items can be read by the M.U.T.-III from the ABS-ECU input data.

No.	Data list item	Check conditions	Normal conditions
01	Failure continuation time 1	Always	Maximum time to be stored: 9,999 minutes (approximately seven days)
02	Failure continuation time 2	Always	
03	Seat position	Slide the seat from the back-end position to the front-end position.	Rear/Front
10	Elimination times	Always	Maximum time to be stored: 255 times

ACTUATOR TEST REFERENCE TABLE

M1524003600080

The M.U.T.-III activates the following actuators for testing.

M.U.T.-III display	ItemNo.	Item	Parts to be activated
SRS Warning Lamp	01	The SRS warning lamp illuminates.	CAN output

FAIL-SAFE FUNCTION

M1524003700076

If the SRS-ECU determines that the following parts are defective, the SRS-ECU operates the SRS warning lamp and controls as follows.

- If the seat slide sensor is defective, the SRS-ECU determines that the seat is in its backward position and controls the air bag.

Main Index
Group TOC

POST-COLLISION DIAGNOSIS

M1524001101037

Whether or not the air bags have deployed, check and service the vehicle after collision as follows:

SRS-ECU MEMORY CHECK

⚠ CAUTION

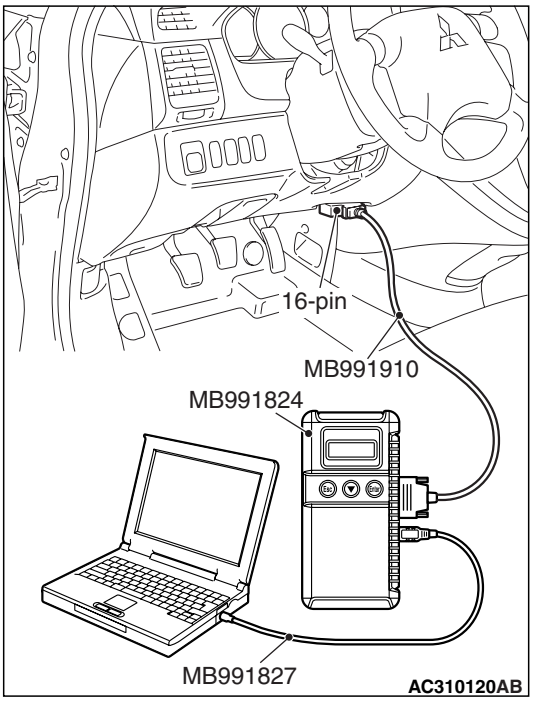

Refer to that the ignition switch is "LOCK" (OFF) when connecting or disconnecting M.U.T.-III.

1. Connect the M.U.T.-III to the diagnosis connector (Refer to GROUP 00, How to Use Troubleshooting/Inspection Service Points P.00-5).
2. Read (and write down) all displayed diagnosis codes (Refer to P.52B-11 <Except vehicles for Hong Kong, Singapore, Australia and New Zealand>, P.52B-164 <Vehicles for Hong Kong, Singapore, Australia and New Zealand>).

   NOTE: If battery power supply has been shut down by the collision, the M.U.T.-III cannot communicate with the SRS-ECU. Check and, repair if necessary, the instrument panel wiring harness before the next job.
3. Use the M.U.T.-III to read the data list (how long trouble(s) have continued and how often memory have been erased).

Data list

No	Service Data Item	Applicability
01	Failure continuation time 1	Maximum time to be stored: 9,999 minutes (approximately 7 days)
02	Failure continuation time 2	
03	Seat position	Rear/Front
10	Elimination times	Maximum time to be stored: 255 times

4. Erase the diagnosis codes and after waiting 5 seconds or more read (and write down) all displayed diagnosis codes.

Main Index
Group TOC

REPAIR PROCEDURE

WHEN FRONT AIR BAGS DEPLOY IN A COLLISION.

1. Replace the following parts with new ones.
   - SRS-ECU (Refer to P.52B-332).
   - Front air bag modules (Refer to P.52B-334).
   - Seat belt with pre-tensioner (Refer to P.52B-350).
   - Front impact sensors (Refer to P.52B-330).
   - Instrument panel (Refer to GROUP 52A, Instrument Panel Assembly P.52A-2).
2. Check the following parts and replace if there are any malfunctions.
   - Clock spring (Refer to P.52B-334).
   - Steering wheel, steering column and shaft assembly (Refer to GROUP 37, Steering wheel P.37-15, Steering column and shaft assembly P.37-17).
     (1) Check the wiring harness (built into the steering wheel) and connectors for damage, and terminals for deformation.
     (2) Install the air bag module to check fit or alignment with the steering wheel.
     (3) Check the steering wheel for noise, binds or difficult operation and excessive free play.
     (4) Check the steering column shaft shock absorbing mechanism (Refer to GROUP 37, On-Vehicle Service P.37-14).
3. Check the harness for binding, connectors for damage, poor connections, and terminals for deformation (Refer to P.52B-5).

WHEN SIDE-AIRBAGS DEPLOY IN A COLLISION.

1. Replace the following parts with new ones.
   - SRS-ECU (Refer to P.52B-332).
   - Side impact sensors (Refer to P.52B-347).
   - Curtain air bag modules (Refer to P.52B-342).
   - Front seat assembly (Refer to GROUP 52A, Front Seat Assembly P.52A-23).
2. Check the harness for binding, connectors for damage, poor connections, and terminals for deformation (Refer to P.52B-3).

WHEN AIR BAGS DO NOT DEPLOY IN LOW-SPEED COLLISION.

Check the SRS components. If visible damage such as dents, cracks, or deformation are found on the SRS components, replace them with new ones. Concerning parts removed for inspection, replacement with new parts and cautions in working, refer to P.52B-327

FRONT IMPACT SENSOR

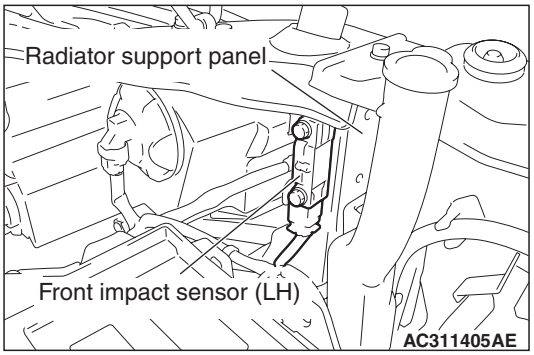

1. Check the front side member and front impact sensor for deformation or rust.
2. Check the front impact sensor for dents, cracks, deformation or rust.
3. Check the sensor harnesses for binding, the connectors for damage, and the terminals for deformation.

NOTE: The figures show front impact sensors (LH). The side impact sensors (RH) is symmetrical with the side impact sensors (LH).

SRS-ECU

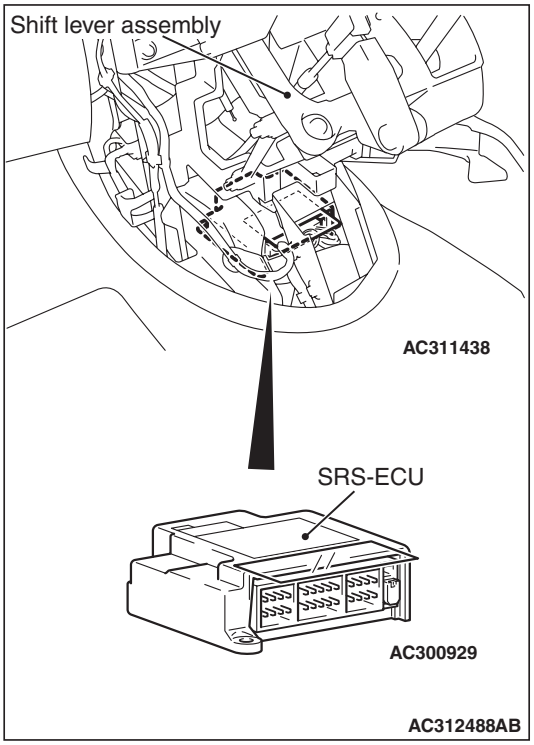

1. Check the SRS-ECU case and brackets for dents, cracks or deformation.
2. Check the connector for damage, and the terminals for deformation.
3. Check the SRS-ECU and bracket for installation condition.

Main Index
Group TOC

AIR BAG MODULES

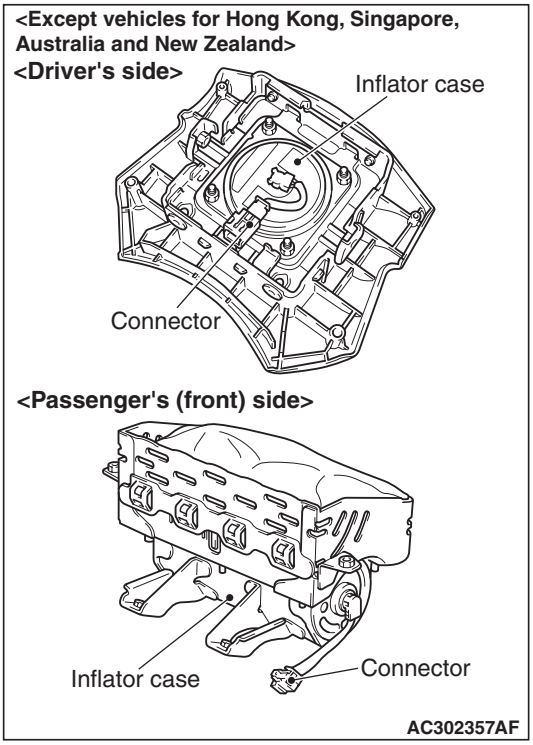

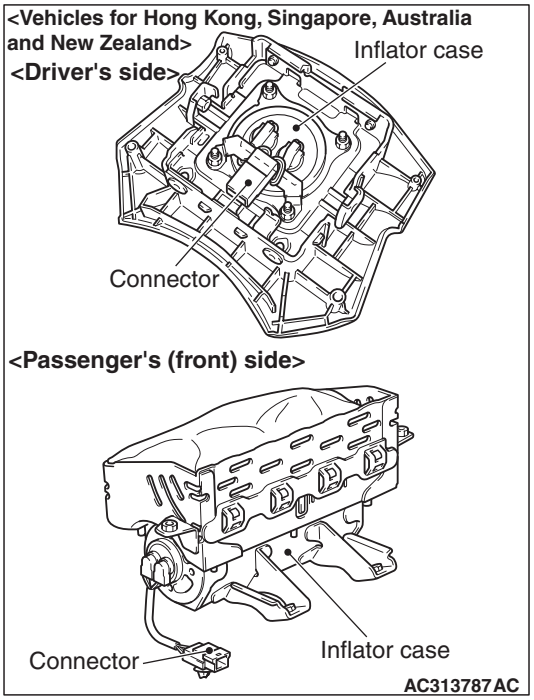

1. Check the pad cover for dents, cracks or deformation.
2. Check the connector for damage, terminals deformities, and the harness for binding.
3. Check the air bag inflator case for dents, cracks or deformities.
4. Check the air bag modules for proper installation.

FRONT SEAT ASSEMBLY (SIDE-AIRBAG MODULE)

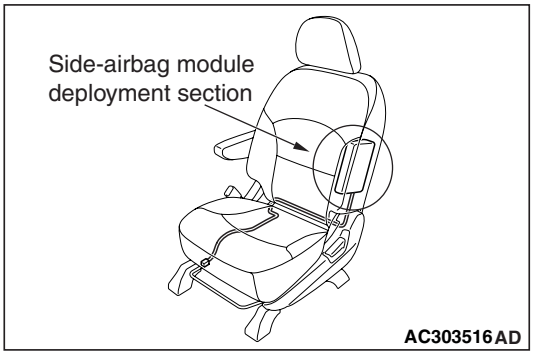

1. Check the side-airbag module deployment section in the seat for dents and deformation.
2. Check the connectors for damage, the terminals for deformation, and the harness for binds.

CLOCK SPRING

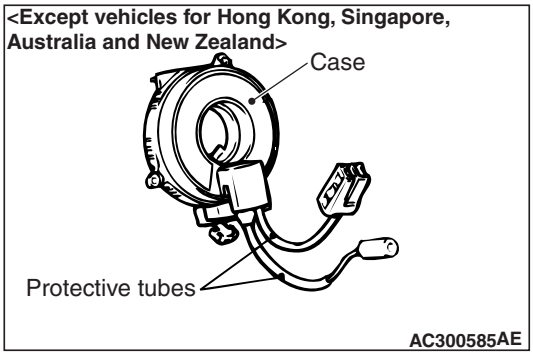

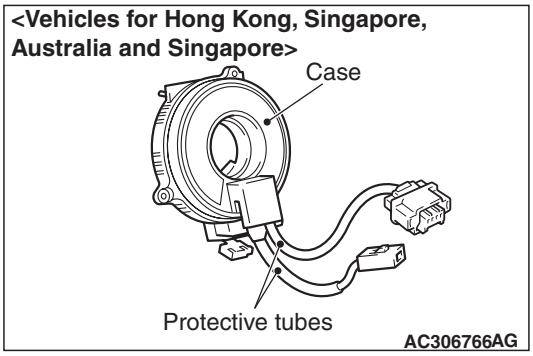

1. Check the clock spring connectors and protective tube for damage, and the terminals for deformation.
2. Visually check the case for damage.

Main Index
Group TOC

SIDE IMPACT SENSOR

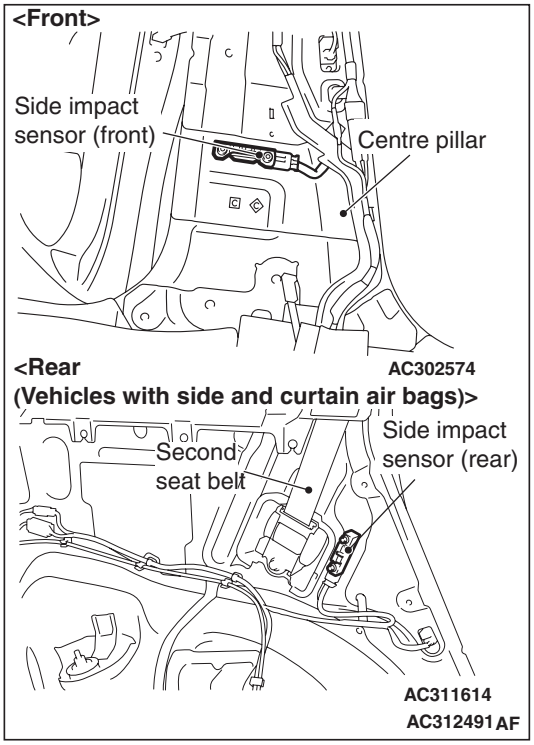

1. Check the centre pillar for deformation or rust.
2. Check the side impact sensors for dents, cracks, deformation and rust.
3. Check the connector for damage and the terminals for deformation.

   NOTE: The figures show side impact sensors (LH). The side impact sensors (RH) is symmetrical with the side impact sensors (LH).

SEAT BELT WITH PRE-TENSIONER

1. Check the seat belt for damage or deformation.
2. Check the seat belt with pre-tensioner for cracks or deformation.
3. Check that the unit is installed correctly to the vehicle body.

CURTAIN AIR BAG MODULES

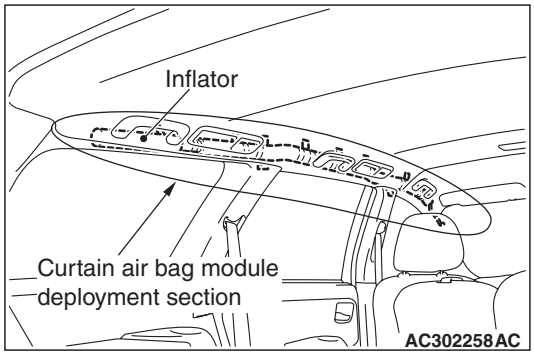

1. Check that the curtain air bag deployment part of the headlining is normal.
2. Check the inflator surface for cracks, dents or deformations.
3. Check the air bag for breakage.
4. Check the connector for damage, the terminal for deformation and the harness for binding.

SEAT SLIDE SENSOR <VEHICLES FOR HONG KONG, SINGAPORE, AUSTRALIA AND NEW ZEALAND>

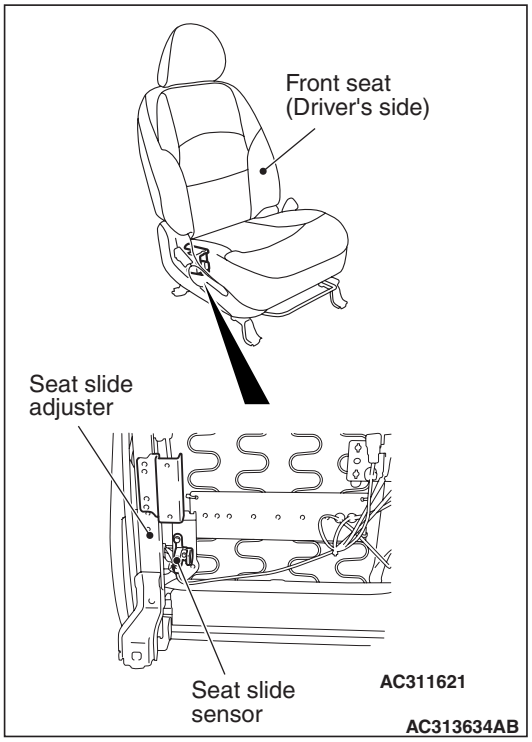

1. Check that there is no connector damage, bent terminals or harness crimping.
2. Check the installation of the seat slide sensor.

Main Index
Group TOC

STEERING WHEEL, STEERING COLUMN AND SHAFT ASSEMBLY

1. Check the wiring harness (built into the steering wheel) and the connectors for damage, and the terminals for deformation.
2. Install the air bag module to check fit or alignment with the steering wheel.
3. Check the steering wheel for noise, binding or difficult operation and excessive free play.
4. Check the steering column shaft shock absorbing mechanism (Refer to GROUP 37, On-Vehicle Service P.37-14).

HARNESS CONNECTOR (INSTRUMENT PANEL WIRING HARNESS AND FLOOR WIRING HARNESS, ROOF WIRING HARNESS)

Check harnesses for binding, connectors for damage and terminals for deformation (Refer to P.52B-3).

INDIVIDUAL COMPONENT SERVICE

M1524002900680

⚠ WARNING

- ***If heat damage may occur during paint work, remove the SRS-ECU, the air bag modules, the clock spring, front seats, side impact sensors, seat slide sensor and the seat belt with pre-tensioner.***
  - ***SRS-ECU, air bag modules, clock spring, seat slide sensor and side impact sensors: 93° C or more***
  - ***Seat belt with pre-tensioner: 90°C or more***
- ***If the SRS components are removed for the purpose of check, sheet metal repair, painting, etc., they should be stored in a clean, dry place until they are reinstalled.***

If the SRS components are to be removed or replaced as a result of maintenance, troubleshooting etc., follow the service procedures that follow. (SRS-ECU; refer to P.52B-332, Driver's and passenger's (front) air bag modules and clock spring; refer to P.52B-334, Side and curtain air bag modules; refer to P.52B-342, Front impact sensor; refer to P.52B-330, Front impact sensor; refer to P.52B-330, Side impact sensors; refer to P.52B-347, Seat belt with pre-tensioner; refer to P.52B-350, Seat slide sensor <Vehicles for Hong Kong, Singapore, Australia and New Zealand>; refer to P.52B-353).

Main Index
Group TOC

WARNING/CAUTION LABELS

M1524003000389

Caution labels on the SRS are attached in the vehicle as shown. Follow label instructions when servicing the SRS. If the label(s) are dirty or damaged, replace with new one(s).

Driver's air bag module *1

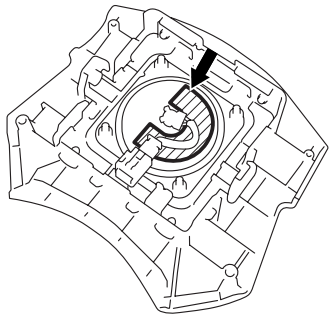

AC302074

Driver's air bag module *2

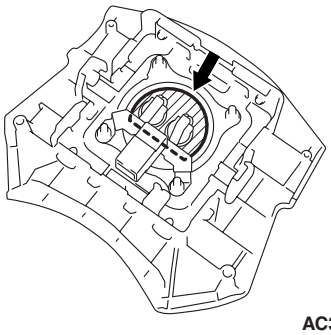

AC311881

Clock spring

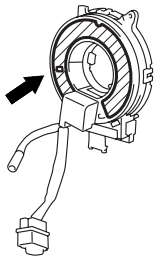

SRS-ECU

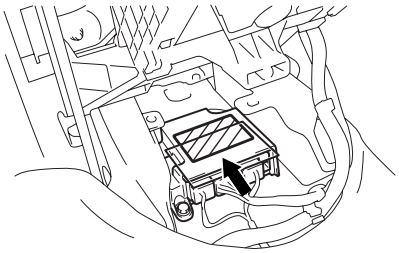

AC311626

Sun visor *3

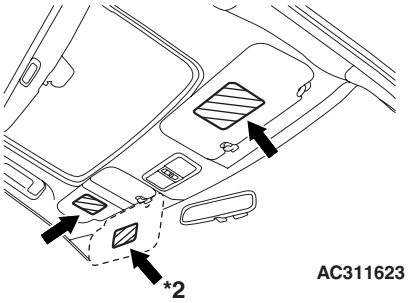

AC311623

Seat belt with pre-tensioner (driver's and passenger's seat)

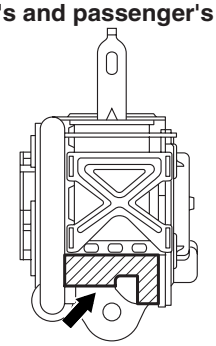

AC302187

Passenger's (front) air bag module *1

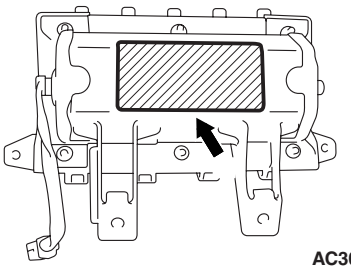

AC302071

Passenger's (front) air bag module *2

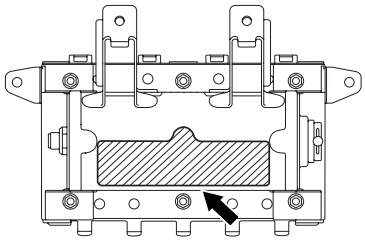

AC311401

Side air bag module

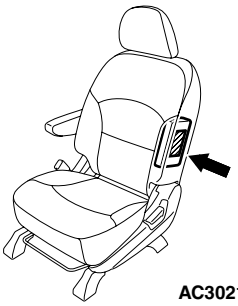

AC302189

AC503651AC

Main Index
Group TOC

Hood

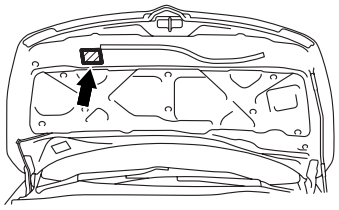

AC302072

Front impact sensor *3

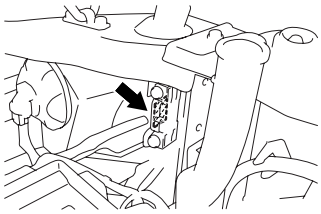

AC311408

Side impact sensor (front)

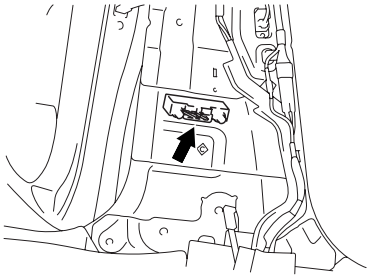

AC312011

Side impact sensor (rear)

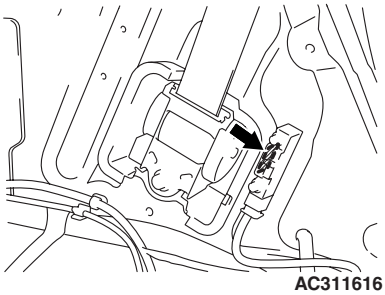

AC311616

Curtain air bag module

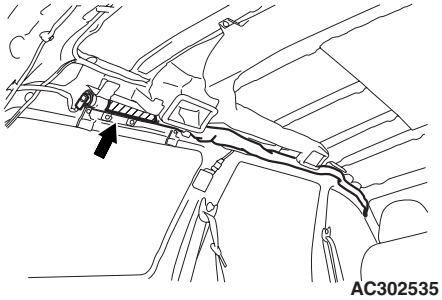

AC302535

AC503652 AC

NOTE:

- **1: Except vehicles for Hong Kong, Singapore, Australia and New Zealand*
- **2: Vehicles for Hong Kong, Singapore, Australia and New Zealand*
- **3: indicates RHD vehicles. For LHD vehicles, the specified application position of label is reversed left to right.*

Main Index
Group TOC

FRONT IMPACT SENSORS

REMOVAL AND INSTALLATION

M1524001500667

⚠ WARNING

- ***Never repair or disassemble the front impact sensor. If faulty, replace it.***
- ***Do not drop or subject the front impact sensor to impact or vibration. If denting, cracking, deformation, or rust are discovered in the front impact sensor, replace it with a new front impact sensor. Discard the old one.***
- ***After deployment of an air bag, replace the front impact sensor with a new one.***

Pre-removal Operation
- Turn the ignition switch to the "LOCK" (OFF) position.

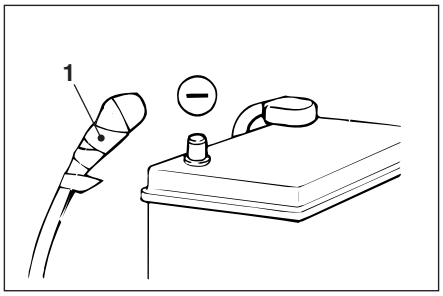

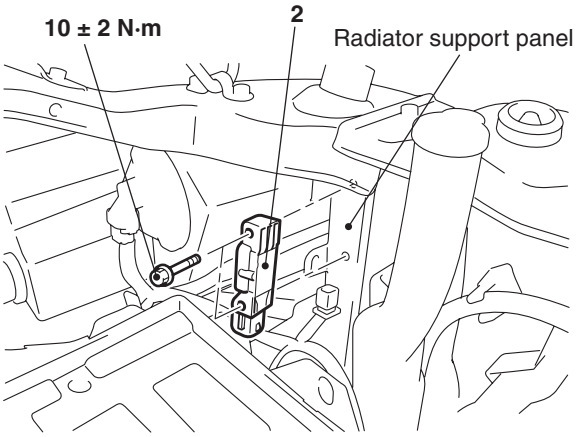

AC311903

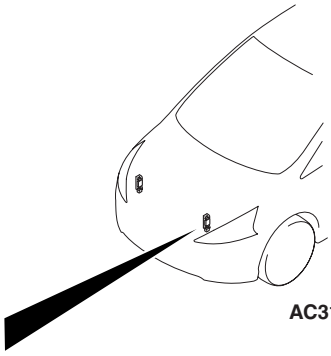

AC311399

AC312505AB

Removal step

<<A>> 1. Negative battery cable connection
- Battery

2. Front impact sensor

Installation steps

>>A<< • Pre-installation inspection

>>B<< 2. Front impact sensor
- Battery

Installation steps (Continued)

1. Negative battery cable connection

>>C<< • Post-installation inspection

NOTE: The figure indicates the left front impact sensor. The right impact sensor is symmetrical to this.

Main Index
Group TOC

REMOVAL SERVICE POINT

<<A>>NEGATIVE BATTERY CABLE DISCONNECTION

⚠ DANGER

Wait at least 60 seconds after disconnecting the battery cable before doing any further work (Refer to P.52B-5).

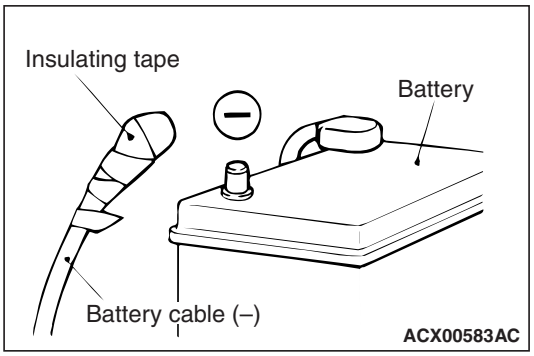

Disconnect the negative battery cable from the battery and tape the terminal to prevent accidental connection and air bag(s) deployment.

INSTALLATION SERVICE POINTS

>>A<<PRE-INSTALLATION INSPECTION

When installing the new front impact sensor, refer to "INSPECTION." P.52B-331

>>B<<FRONT IMPACT SENSOR INSTALLATION

⚠ WARNING

The SRS may not activate properly if a front impact sensor is not installed properly, which could result in serious injury or death to the vehicle's driver.

1. Securely connect the connector.
2. Position the front impact sensor facing toward the front of the vehicle as indicated by the arrow on the label, and install it securely.

>>C<<POST-INSTALLATION INSPECTION

1. Reconnect the negative battery cable.
2. Turn the ignition key to "ON" position.

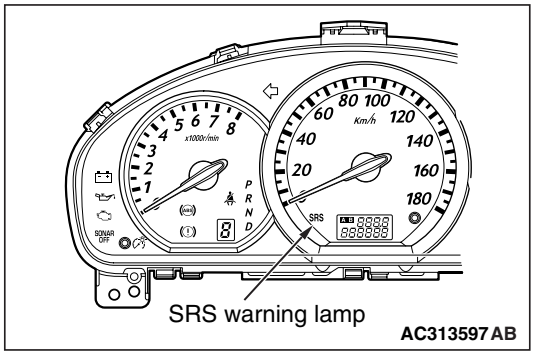

3. Does the SRS warning lamp illuminate for about 7 seconds, and go out?
4. If yes, the SRS system is functioning properly.

   If not, consult page P.52B-11 <Except vehicles for Hong Kong, Singapore, Australia and New Zealand> or P.52B-163 <Vehicles for Hong Kong, Singapore, Australia and New Zealand>.

INSPECTION

M1524001600578

⚠ WARNING

If a dent, crack, deformation or rust is detected, replace with a new sensor.

NOTE: For checking of the front impact sensor other than described below, refer to the section concerning SRS diagnosis (Refer to P.52B-11 <Except vehicles for Hong Kong, Singapore, Australia and New Zealand>, P.52B-164 <Vehicles for Hong Kong, Singapore, Australia and New Zealand>).

1. Check the front impact sensor and bracket for dents, cracks or deformation.
2. Check the connector for damage, and terminals for deformation.
3. Check that there is no bending or corrosion in the radiator support panel.

Main Index
Group TOC

SRS CONTROL UNIT (SRS-ECU)

REMOVAL AND INSTALLATION

M1524002100792

⚠ WARNING

- ***Never attempt to disassemble or repair the SRS-ECU. If faulty, replace it.***
- ***Do not drop or subject the SRS-ECU to impact or vibration. If denting, cracking, deformation, or rust are discovered in the SRS-ECU, replace it with a new front impact sensor. Discard the old one.***
- ***After deployment of an air bag, replace the SRS-ECU with a new one.***
- ***Never use an ohmmeter on or near the SRS-ECU, and use only the special test equipment described on P.52B-11.***

Pre-removal Operation
- Turn the ignition switch to the "LOCK" (OFF) position.

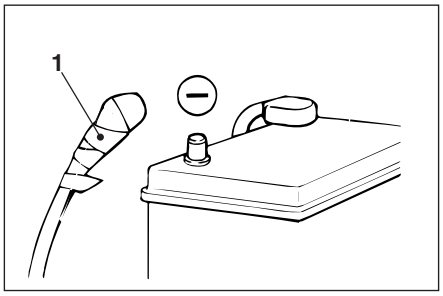

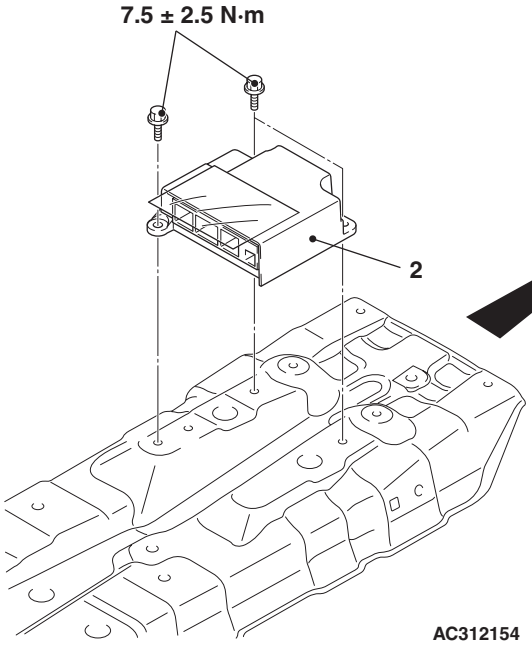

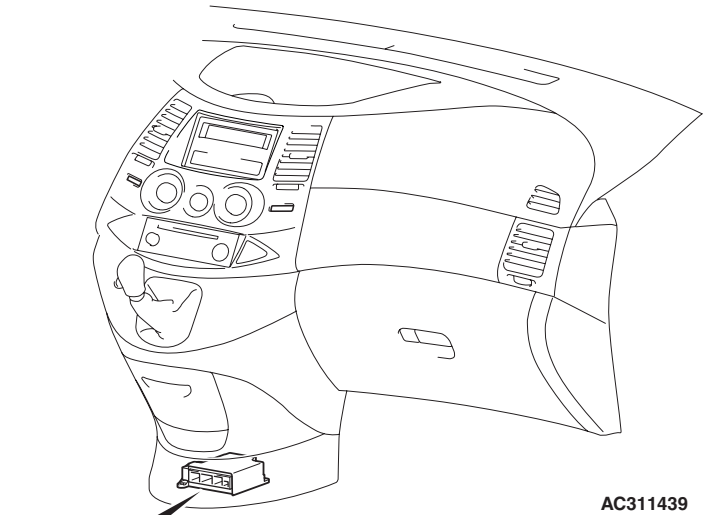

AC312522AB

Removal steps

<<A>>
1. Negative battery cable connection
   - Centre console (Refer to GROUP 52A, Instrument panel assembly P.52A-2.)
   - Rear heater duct (Refer to GROUP 55, Ventilators P.55-250.)
   - Gearshift link mounting bracket <M/T> (Refer to GROUP 22A, Transmission control assembly P.22A-8.)
2. SRS-ECU

Installation steps

>>A<<
2. SRS-ECU
   - Gearshift link mounting bracket <M/T> (Refer to GROUP 22A, Transmission control assembly P.22A-8.)
   - Rear heater duct (Refer to GROUP 55, Ventilators P.55-250.)
   - Centre console (Refer to GROUP 52A, Instrument panel assembly P.52A-2.)
1. Negative battery cable connection

>>B<<
- Post-installation inspection

REMOVAL SERVICE POINT

<<A>>NEGATIVE BATTERY CABLE DISCONNECTION

⚠ DANGER

Wait at least 60 seconds after disconnecting the battery cable before doing any further work (Refer to P.52B-5).

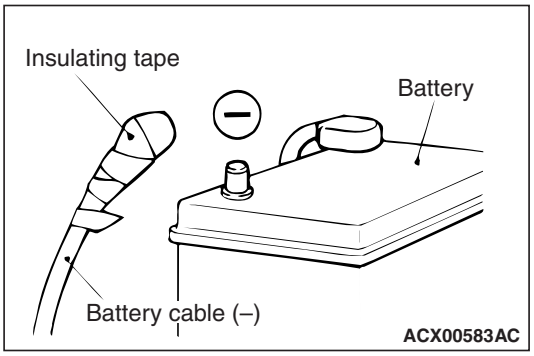

Disconnect the negative battery cable from the battery and tape the terminal to prevent accidental connection and air bag(s) deployment.

INSTALLATION SERVICE POINTS

>>A<< SRS-ECU INSTALLATION

⚠ WARNING

The SRS may not activate if SRS-ECU is not installed properly.

>>B<< POST-INSTALLATION INSPECTION

1. Connect the negative battery cable.
2. Turn the ignition key to "ON" position.

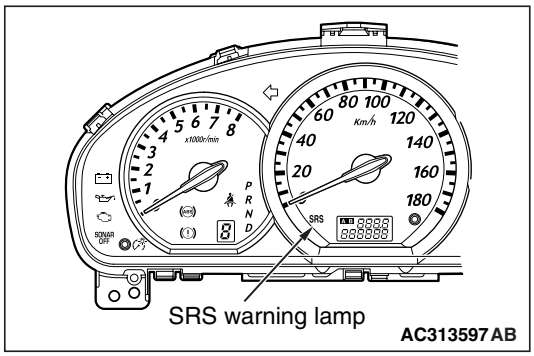

3. Does the SRS warning lamp illuminate for about 7 seconds, and then remain extinguished for at least 5 seconds after turning OFF?
4. If no, refer to troubleshooting (Refer toP.52B-11 <Except vehicles for Hong Kong, Singapore, Australia and New Zealand>, P.52B-164 <Vehicles for Hong Kong, Singapore, Australia and New Zealand>).

INSPECTION

M1524002200562

⚠ WARNING

If any problems are found, replace the SRS-ECU.

- Check the SRS-ECU and brackets for dents, cracks or deformation.
- Check the SRS-ECU connector for damage, and the terminals for deformation.

NOTE: For the checks other than the items above, refer to "Troubleshooting" (Refer to P.52B-11 <Except vehicles for Hong Kong, Singapore, Australia and New Zealand>, P.52B-164 <Vehicles for Hong Kong, Singapore, Australia and New Zealand>).

Main Index
Group TOC

DRIVER'S, FRONT PASSENGER'S AIR BAG MODULES AND CLOCK SPRING

REMOVAL AND INSTALLATION

M1524014500236

⚠ WARNING

- ***Never attempt to disassemble or repair the air bag modules or clock spring. If faulty, replace it.***
- ***Do not drop the air bag modules or clock spring or allow contact with water, grease or oil. Replace it if a dent, crack, deformation or rust is detected.***
- ***The air bag modules should be stored on a flat surface is facing upward. Do not place anything on top of it.***
- ***Do not expose the air bag modules to temperatures over 93°C.***
- ***After deployment of an air bag, replace the clock spring with a new one.***
- ***Wear gloves and safety glasses when handling air bags that have already deployed.***
- ***An undeployed air bag module should only be disposed of in accordance with the procedures (Refer to P.52B-356).***

<DRIVER'S AIR BAG MODULE AND CLOCK SPRING>

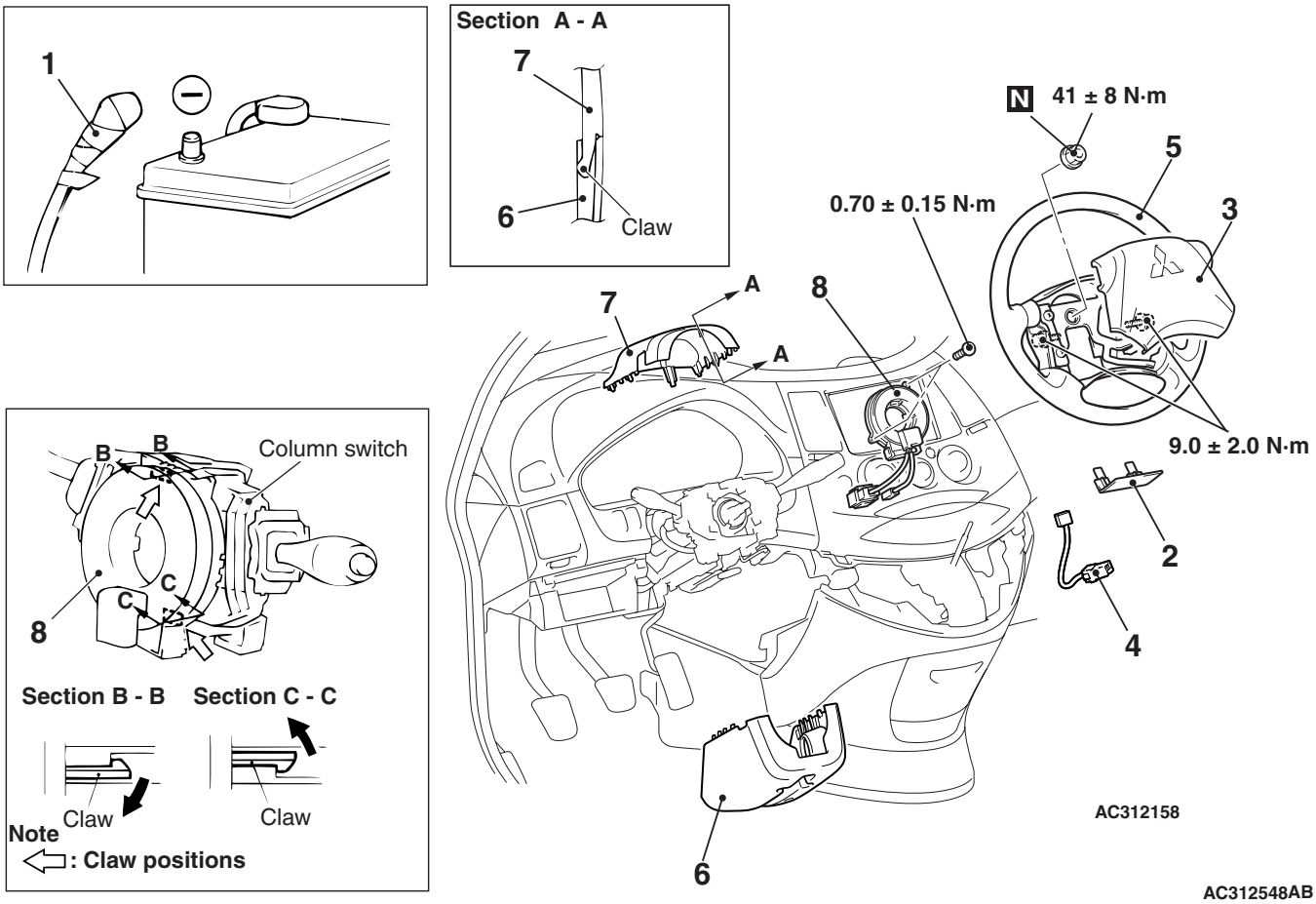

Main Index
Group TOC

Air bag module removal steps

<<A>> 1. Negative battery cable connection
<<B>> 2. Cover
- Horn connector connection
<<C>> - Air bag module connector connection
<<D>> 3. Air bag module

Clock spring removal steps

<<A>> 1. Negative battery cable connection
<<B>> 2. Cover
- Horn connector connection
<<C>> - Air bag module connector connection
<<D>> 3. Air bag module
4. Clock spring sub harness <Vehicles for auto-cruise control switch>
<<E>> 5. Steering wheel assembly
6. Lower column cover
7. Upper column cover
<<F>> 8. Clock spring

Air bag module installation steps

>>A<< - Pre-installation inspection
>>C<< 3. Air bag module
>>D<< - Horn connector connection
>>D<< - Air bag module connector connection
2. Cover
1. Negative battery cable connection
>>E<< - Post-installation inspection

Clock spring installation steps

>>A<< - Pre-installation inspection
>>B<< 8. Clock spring
7. Upper column cover
6. Lower column cover
>>C<< 5. Steering wheel assembly
4. Clock spring sub harness <Vehicles for auto-cruise control switch>
>>C<< 3. Air bag module
2. Cover
1. Negative battery cable connection
>>E<< - Post-installation inspection

Main Index
Group TOC

<PASSENGER'S (FRONT) AIR BAG MODULE>

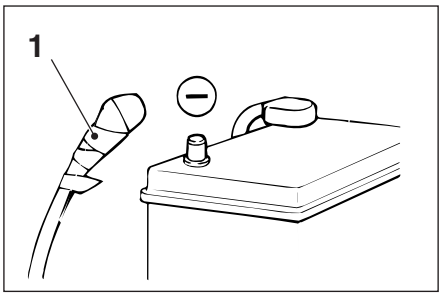

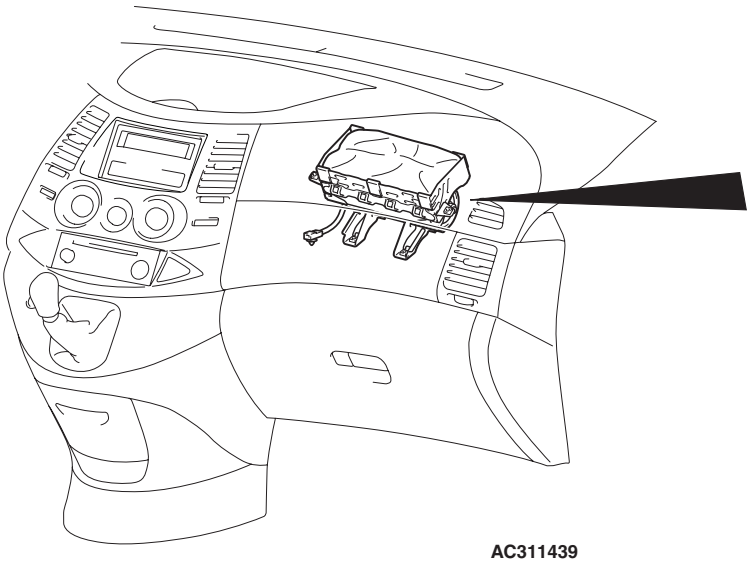

AC311439

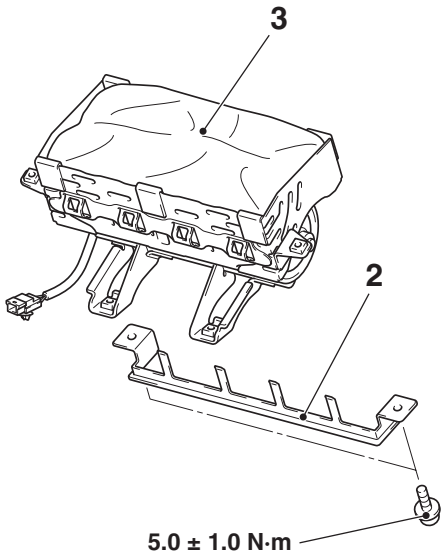

AC312210

AC312550AB

Removal steps

<<A>> 1. Negative battery cable connection
- Instrument panel (Refer to GROUP 52A, Instrument panel P.52A-2.)

2. Backbone bracket

<<G>> 3. Passenger's (front) air bag module

Installation steps

>>A<< - Pre-installation inspection

3. Passenger's (front) air bag module
2. Backbone bracket
- Instrument panel (Refer to GROUP 52A, Instrument panel P.52A-2.)

1. Negative battery cable connection

>>E<< - Post-installation inspection

Main Index
Group TOC

REMOVAL SERVICE POINTS

<<A>> NEGATIVE BATTERY CABLE DISCONNECTION

⚠ ***DANGER***

Wait at least 60 seconds after disconnecting the battery cable before doing any further work. (Refer to P.52B-5).

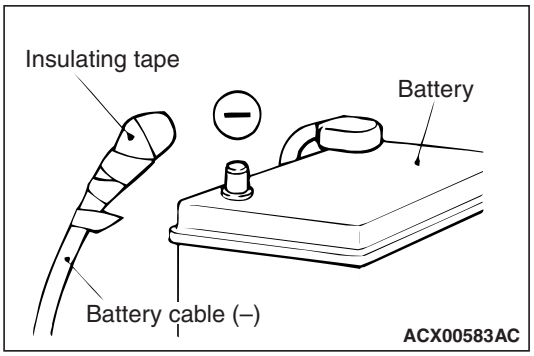

Disconnect the negative battery cable from the battery and tape the terminal to prevent accidental connection and air bag(s) deployment.

<<B>>COVER REMOVAL

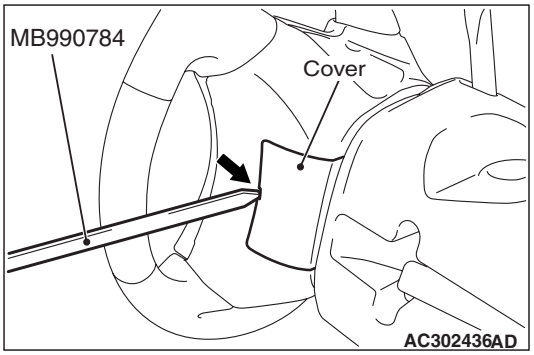

Insert the special tool ornament remover (MB990784) as shown in the illustration to remove the cover.

<<C>> AIR BAG MODULE CONNECTOR DISCONNECTION

<Except vehicles for Hong Kong, Singapore, Australia and New Zealand>

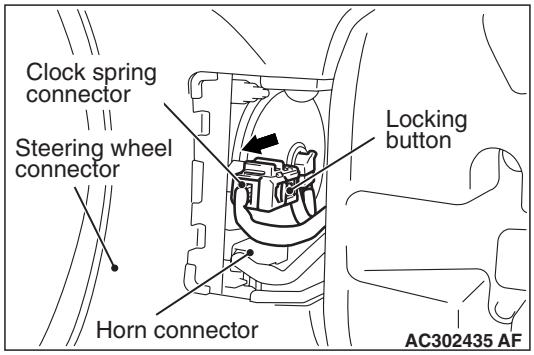

Disconnect the clock spring connector while compressing its locking button and sliding it to the direction of an arrow.

<Vehicles for Hong Kong, Singapore, Australia and New Zealand>

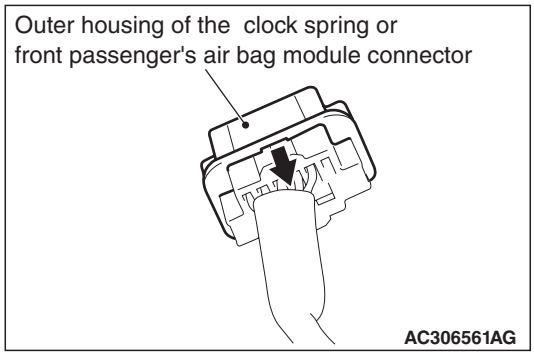

Slide the outer housing of the clock spring or front passenger’s air bag module connector in the arrow direction shown, and disconnect the connector.

<<D>> DRIVER’S AIR BAG MODULE REMOVAL

⚠ ***WARNING***

- ***Never use an electric tester to diagnose the air bag module circuit. Never attempt to disassemble the air bag module.***
- ***The removed driver's air bag module should be stored in a clean, dry place with the deployment surface facing up.***

Main Index
Group TOC

<<E>> STEERING WHEEL ASSEMBLY REMOVAL

⚠ CAUTION

Use the special tool to remove the steering wheel since the steering column collision absorbing mechanism may be damaged.

1. Position the steering wheel in a straight ahead direction.

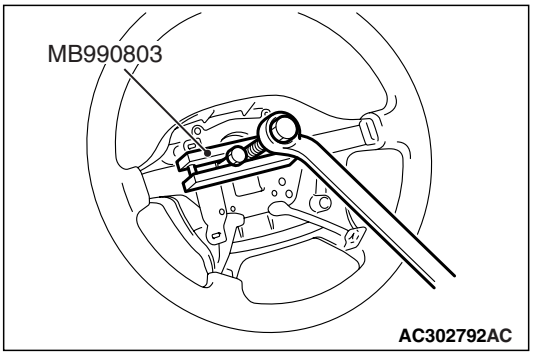

2. Using the special tool (Steering wheel puller, MB990803), remove the steering wheel assembly as shown in the figure.

<<F>> CLOCK SPRING REMOVAL

⚠ WARNING

The removed clock spring should be stored in a clean, dry place.

<<G>> PASSENGER'S (FRONT) AIR BAG MODULE REMOVAL

⚠ WARNING

- ***Never use an electric tester to diagnose the air bag module circuit. Never attempt to disassemble the air bag module.***
- ***The removed front passenger's air bag module should be stored in a clean, dry place with the deployment surface facing up.***

INSTALLATION SERVICE POINTS

>>A<< PRE-INSTALLATION INSPECTION

⚠ WARNING

Dispose of air bag modules only according to the specified procedure. (Refer to P.52B-356).

1. When installing the new air bag modules and clock spring, refer to "INSPECTION" (P.52B-340).
2. Connect the negative battery cable.

⚠ CAUTION

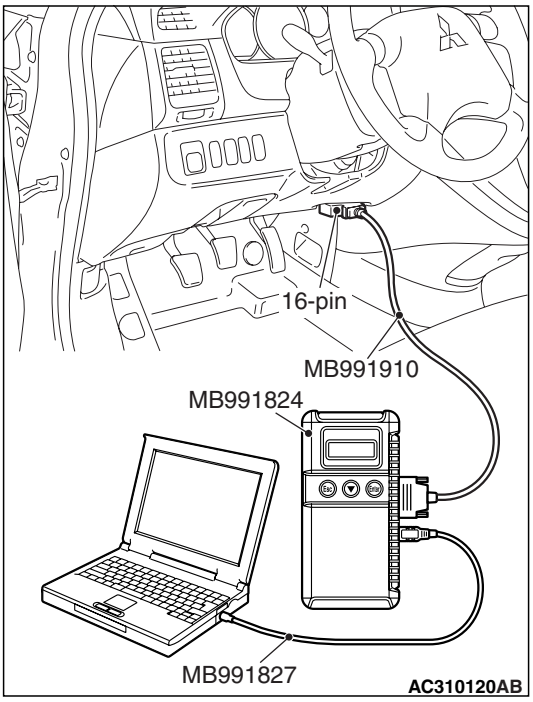

To prevent damage to M.U.T.-III, always turn the ignition switch to the "LOCK" (OFF) position before connecting or disconnecting M.U.T.-III.

3. Connect M.U.T.-III to the diagnosis connector.
4. Turn the ignition switch to the "ON" position.
5. Check diagnosis codes using M.U.T.-III to ensure entire SRS operates properly.

   At this time, check that no diagnosis code except B1400, B1410, B1480 <Vehicles for Hong Kong, Singapore, Australia and New Zealand> and B1490 <Vehicles for Hong Kong, Singapore, Australia and New Zealand> are set.

⚠ DANGER

Wait at least 60 seconds after disconnecting the battery cable before doing any further work. (Refer to P.52B-5).

6. Turn the ignition switch to the "LOCK" (OFF) position. Disconnect the negative battery cable and tape the terminal to prevent accidental connection and air bags deployment.

Main Index
Group TOC

>>B<< CLOCK SPRING INSTALLATION

⚠ WARNING

Ensure that the clock spring's mating marks are properly aligned. If not, the steering wheel may not rotate completely during a turn, or the flat cable in the clock spring could be damaged, This would prevent normal SRS operation and possibly cause serious injury to the driver.

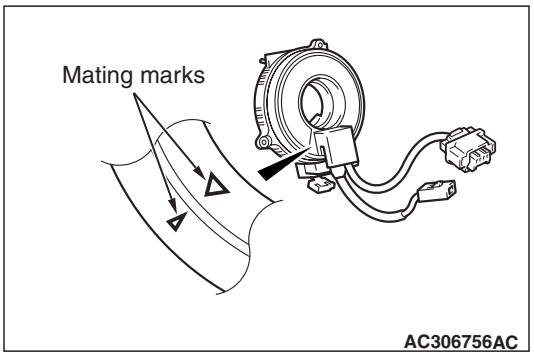

1. Align the mating marks of the clock spring.

   <Mating Mark Alignment>

   Turn the clock spring clockwise fully. Then turn it back approximately 3 3/4 turns anti-clockwise to align the mating marks.
2. Turn the front wheels to the straight-ahead position. Then install the clock spring to the column switch.

>>C<< STEERING WHEEL ASSEMBLY/AIR BAG MODULE/HORN SWITCH ASSEMBLY INSTALLATION

⚠ CAUTION

When installing the steering wheel and air bag module, ensure that the harness of the clock spring does not become caught or tangled.

1. Before installing the steering wheel and air bag module, turn the vehicle's front wheels to the straight-ahead position and align the mating marks of the clock spring.
2. After securing the steering wheel, turn the steering wheel all the way in both directions to confirm that the steering wheel rotation is normal.

>>D<<AIR BAG MODULE CONNECTOR CONNECTION / HORN CONNECTOR DISCONNECTION

Connect the connector securely and route the harnesses not to lie off the cover hole.

>>E<< POST-INSTALLATION INSPECTION

1. Reconnect the negative (–) battery cable.
2. Turn the ignition switch to "ON" position.

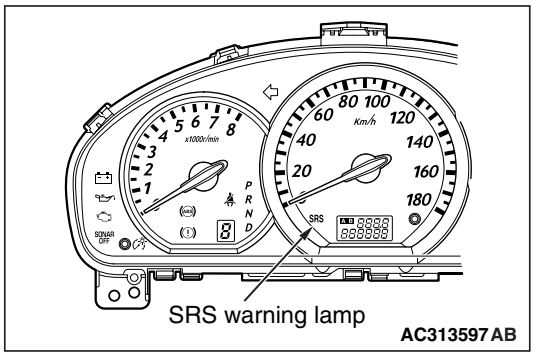

3. Does the SRS warning lamp illuminate for about 7 seconds, and go out?
4. If yes, the SRS system is functioning properly. If no, refer to P.52B-11 <Except vehicles for Hong Kong, Singapore, Australia and New Zealand> or P.52B-163 <Vehicles for Hong Kong, Singapore, Australia and New Zealand>.

Main Index
Group TOC

INSPECTION

M1524014600158

AIR BAG MODULE CHECK

⚠ WARNING

- ***If any component damage is found during the following inspection, replace the air bag module(s) with a new one. Dispose of the old one according to the specified procedure (Refer to P.52B-356).***
- ***Never attempt to measure the circuit resistance of he air bag module (squib) even if you are using the specified tester. If the circuit resistance is measured with a tester, accidental air bag module(s) deployment will result in serious personal injury.***

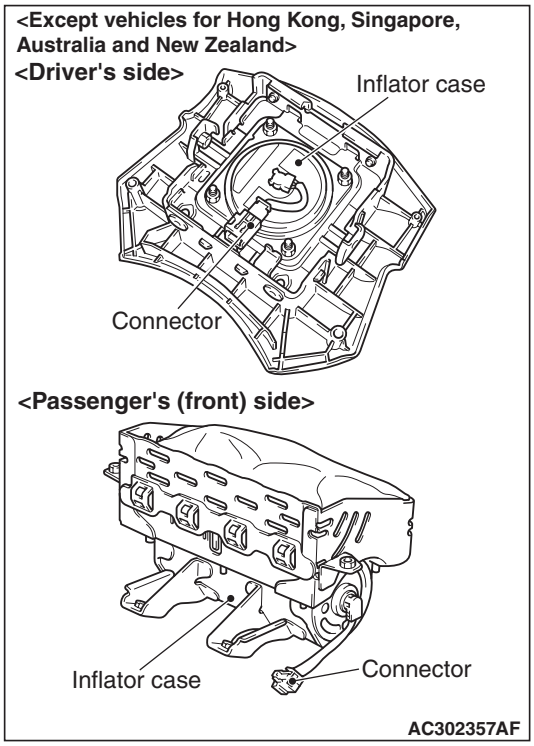

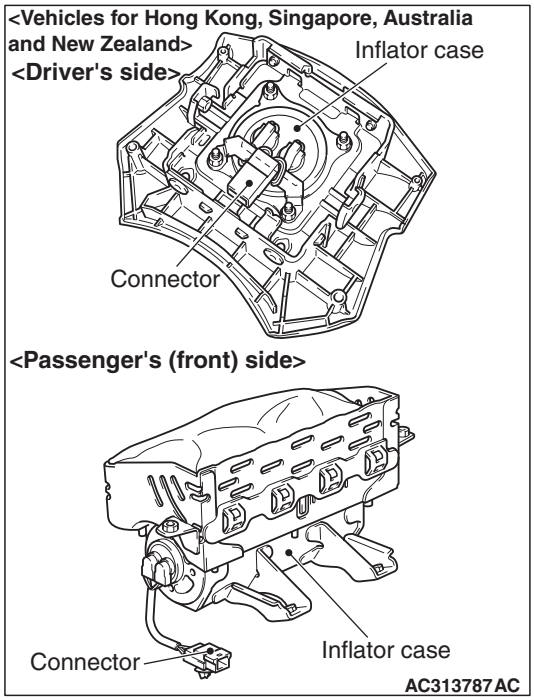

1. Check the pad cover for dents, cracks or deformation.
2. Check the connectors for damage, the terminals for deformation, and the harness for binds.
3. Check the air bag inflator case for dents, cracks or deformation.
4. Install the air bag module (driver's side) to the steering wheel and check fit and alignment with the wheel.
5. Install the air bag module (front passenger's side) to the instrument panel and front deck crossmember and check fit and alignment.

Main Index
Group TOC

CLOCK SPRING CHECK

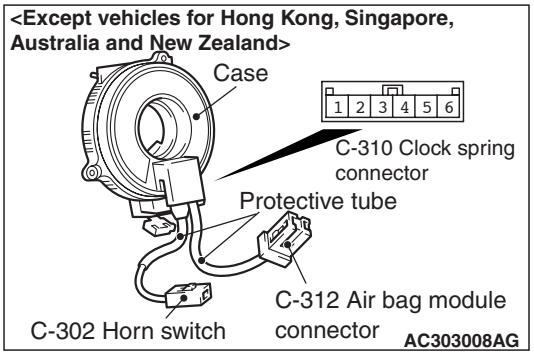

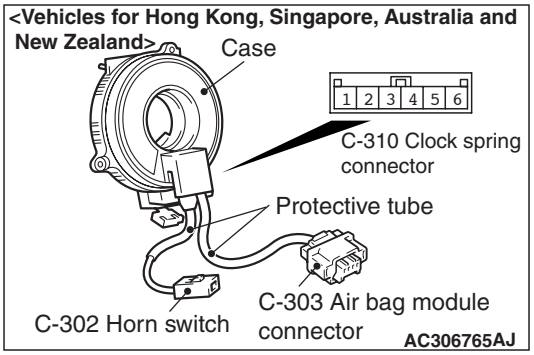

If any malfunction is found in the following inspections, replace the clock spring with a new one.

1. Check the connectors and protective tube for damage, and the terminals for deformation.
2. Visually check the case for damage.
3. Check to see that there is a charge (continuity) between the C-310 clock spring connector terminal 1 and C-302 horn switch.

⚠ CAUTION

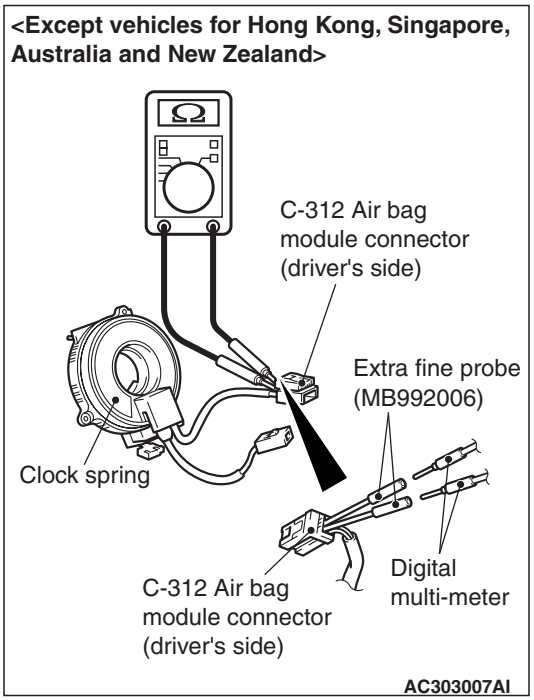

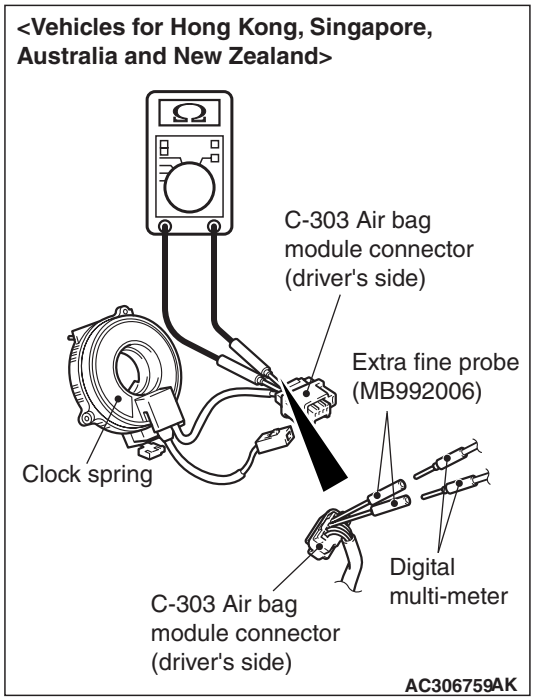

Do not directly insert a probe, etc. into the terminal from the front of the connector.

4. Insert the special tool extra fine probe (MB992006) from behind the C-312 <Except vehicles for Hong Kong, Singapore, Australia and New Zealand> or C-303 <Vehicles for Hong Kong, Singapore, Australia and New Zealand> air bag module connector (driver's side).
5. As shown in the Figure, connect the circuit tester to the special tool extra fine probe (MB992006) and check to see that there is a charge between the terminals.

Main Index
Group TOC

SIDE AND CURTAIN AIR BAG MODULES

REMOVAL AND INSTALLATION

M1524014800130

⚠ WARNING

- ***Never attempt to disassemble or repair the air bag modules and clock spring. If faulty, just replace with new one(s).***
- ***Do not drop the air bag modules or allow contact with water, grease or oil. Replace if a dent, crack, deformation or rust are present.***
- ***Store the air bag modules on a flat surface with the deployment surface facing up. Do not place anything on top of them.***
- ***Do not store the air bag modules in a place more than 93°C.***
- ***When the side and curtain air bags have been deployed, replace the front seat back assembly and curtain air bag modules with new ones.***
- ***Put on gloves and safety glasses when handling deployed air bags.***
- ***When discarding the undeployed air bag module(s), be sure to deploy the air bag(s) in advance as specified in the service procedure (Refer to P.52B-356).***

<SIDE-AIRBAG MODULE>

Pre-removal Operation
- Turn the ignition switch to the "LOCK" (OFF) position.

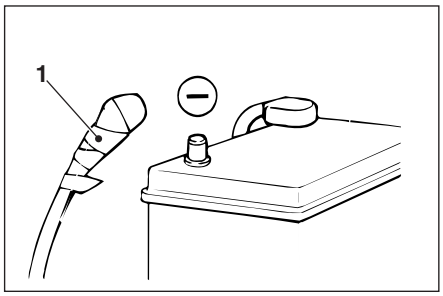

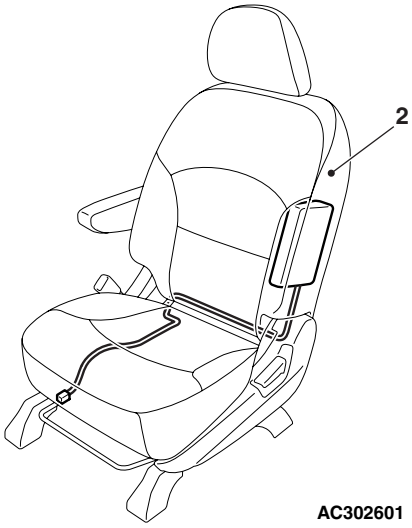

AC302601

AC312590AB

Side-airbag module removal steps

<<A>> 1. Negative battery cable connection
<<B>> 2. Front seat assembly

Side-airbag module installation steps

>>A<< • Pre-installation inspection
2. Front seat assembly
1. Negative battery cable connection
>>D<< • Post-installation inspection

Main Index
Group TOC

<CURTAIN AIR BAG MODULE>

Pre-removal Operation
- Turn the ignition switch to the "LOCK" (OFF) position.

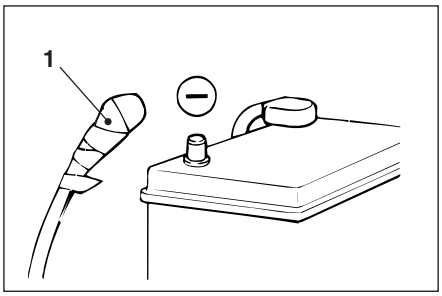

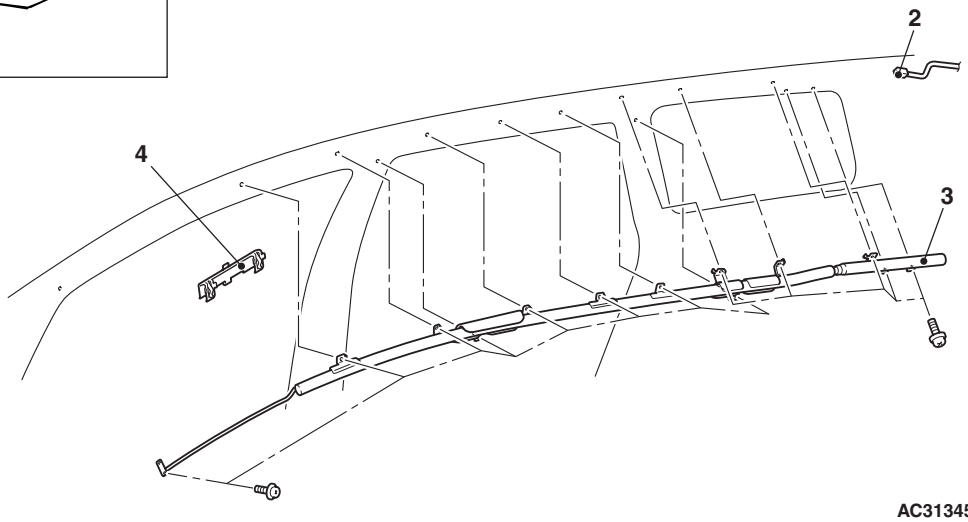

AC313454

AC313518AB

Curtain air bag module removal steps

<<A>> 1. Negative battery cable connection
- Headlining (Refer to GROUP 52A, Headlining P.52A-17.)

<<C>> 2. Connector

<<D>> 3. Curtain air bag module

4. Strap guide bracket

Curtain air bag module installation steps

>>A<< • Pre-installation inspection

4. Strap guide bracket

>>B<< 3. Curtain air bag module

>>C<< 2. Connector
- Headlining (Refer to GROUP 52A, Headlining P.52A-17.)

1. Negative battery cable connection

>>D<< • Post-installation inspection

Main Index
Group TOC

REMOVAL SERVICE POINTS

<<A>> NEGATIVE BATTERY CABLE DISCONNECTION

⚠ ***DANGER***

Wait at least 60 seconds after disconnecting the battery cable before doing any further work (Refer to P.52B-5).

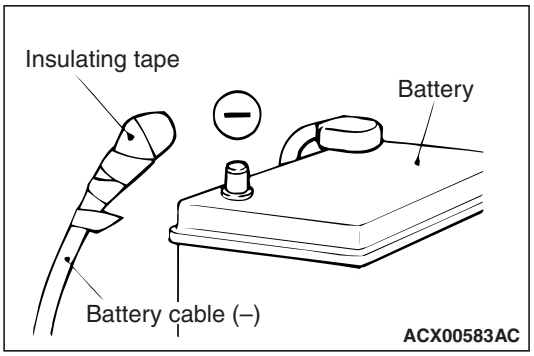

Disconnect the negative battery cable from the battery and tape the terminal to prevent accidental connection and air bag(s) deployment.

<<B>> FRONT SEAT ASSEMBLY REMOVAL

⚠ ***WARNING***

Dispose of air bag modules only according to the specified procedure (Refer to P.52B-356).

Refer to GROUP52A, Front seat assemblyP.52A-23.

<<C>> CONNECTOR REMOVAL

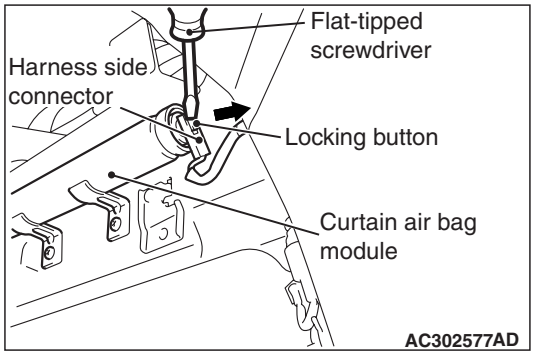

Use a flat-tipped screwdriver to pull out forward and unlock the locking button of the curtain air bag harness-side connector.

<<D>> CURTAIN AIR BAG MODULE REMOVAL

⚠ **CAUTION**

- **Never use an electric tester to diagnose the air bag module circuit. Never attempt to disassemble the air bag module.**
- **The removed air bag module should be stored in a clean, dry place.**

Main Index
Group TOC

INSTALLATION SERVICE POINTS

>>A<< PRE-INSTALLATION INSPECTION

⚠ WARNING

Dispose of air bag modules only according to the specified procedure. (Refer to P.52B-356).

1. When installing the new air bag modules and clock spring, refer to “INSPECTION” (P.52B-340).
2. Connect the negative battery cable.

⚠ CAUTION

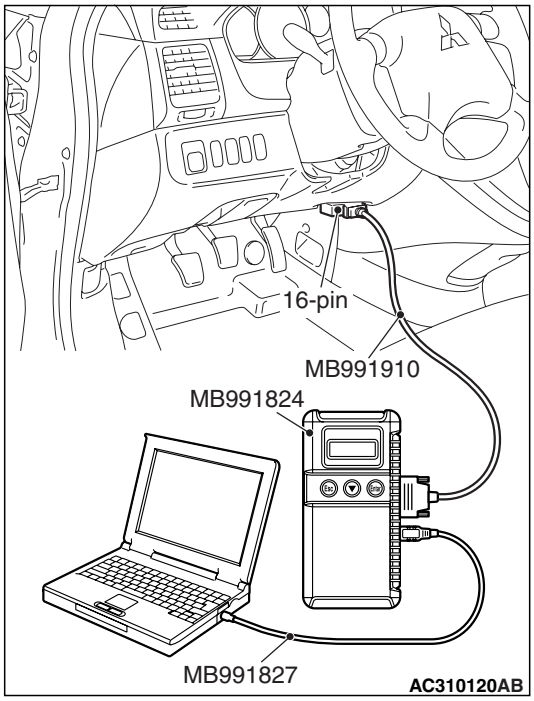

To prevent damage to M.U.T.-III, always turn the ignition switch to the "LOCK" (OFF) position before connecting or disconnecting M.U.T.-III.

3. Connect M.U.T.-III to the diagnosis connector.
4. Turn the ignition switch to the “ON” position.
5. Check diagnosis codes using M.U.T.-III to ensure entire SRS operates properly.

   At this time, check that no diagnosis code except B1420, B1430, B1440 and B1450 are set.

⚠ DANGER

Wait at least 60 seconds after disconnecting the battery cable before doing any further work. (Refer to P.52B-5).

6. Turn the ignition switch to the "LOCK" (OFF) position. Disconnect the negative battery cable and tape the terminal to prevent accidental connection and air bags deployment.

>>B<< CURTAIN AIR BAG MODULE INSTALLATION

⚠ CAUTION

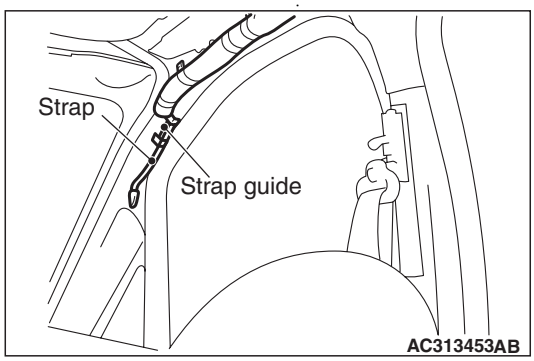

Take care not to contort the curtain air bag when installing it.

- **Take care that the surrounding components do not trap the air bag.**
- **Take care that the front pillar trim clips or other do not trap the strap.**

Hang the strap on the strap guide.

>>C<< CONNECTOR INSTALLATION

⚠ CAUTION

Connect the connector to the inflator thoroughly.

>>D<< POST-INSTALLATION INSPECTION

1. Reconnect the negative (–) battery cable.
2. Turn the ignition switch to “ON” position.

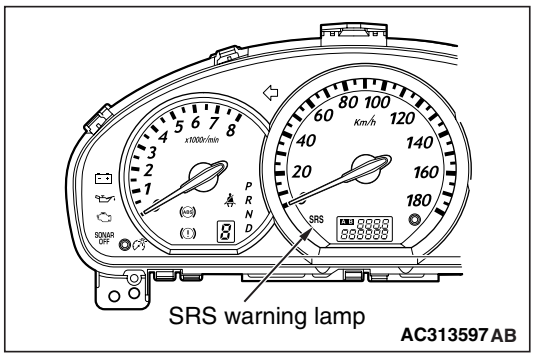

3. Does the SRS warning lamp illuminate for about 7 seconds, and go out?
4. If yes, the SRS system is functioning properly. If no, refer to P.52B-11 <Except vehicles for Hong Kong, Singapore, Australia and New Zealand> or P.52B-163 <Vehicles for Hong Kong, Singapore, Australia and New Zealand>.

Main Index
Group TOC

INSPECTION

M1524014900052

FRONT SEAT ASSEMBLY WITH SIDE-AIRBAG MODULE CHECK

⚠ WARNING

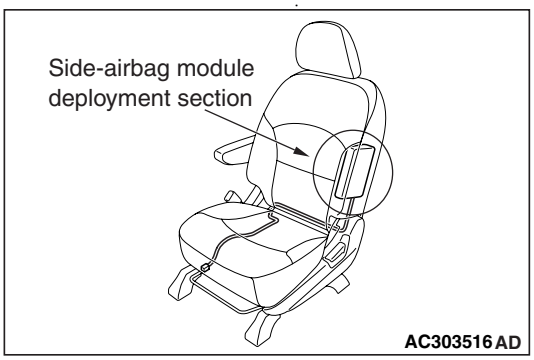

If any improper part is found during the following inspection, replace the front seat-back assembly with a new one. Dispose of the old one according to the specified procedure (Refer to P.52B-356).

- ***Never attempt to measure the circuit resistance of the air bag module (squib) even if you are using the specified tester. If the circuit resistance is measured with a tester, accidental air bag deployment will result in serious personal injury.***

1. Check the air bag module deployment section for dents or deformation.
2. Check connector for damage, terminals for deformation, and harness for binds.

CURTAIN AIR BAG MODULE CHECK

⚠ WARNING

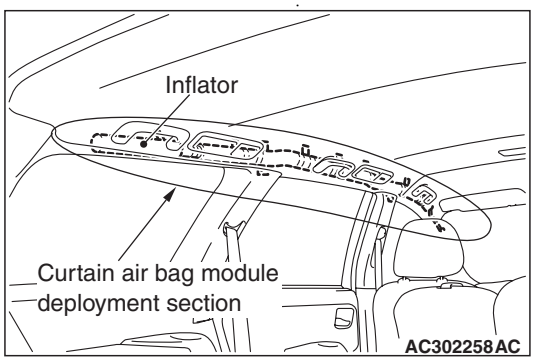

If any improper part is found during the following inspection, replace the curtain air bag module (squib) assembly with a new one. Dispose of the old one according to the specified procedure (Refer to P.52B-356).

- ***Never attempt to measure the circuit resistance of the air bag module (squib) even if you are using the specified tester. If the circuit resistance is measured with a tester, accidental air bag deployment will result in serious personal injury.***

1. Check that the curtain air bag deployment part of the headlining is normal.
2. Check the inflator surface for cracks, dents or deformations.
3. Check the air bag for breakage.
4. Check the connector for damage, the terminal for deformation and the harness for binding.

Main Index
Group TOC

SIDE IMPACT SENSOR

REMOVAL AND INSTALLATION

M1524004600630

⚠ WARNING

- ***Never attempt to disassemble or repair the side impact sensors. If faulty, replace it.***
- ***Do not drop or subject the side impact sensors to impact or vibration. If denting, cracking, deformation, or rust are discovered in the side impact sensors, replace it with a new front impact sensor. Discard the old one.***
- ***After deployment of an air bag, replace the side impact sensors with a new one.***
- ***Never use an ohmmeter on or near the side impact sensors, and use only the special test equipment described on P.52B-11.***

Pre-removal Operation
- Turn the ignition switch to the "LOCK" (OFF) position.

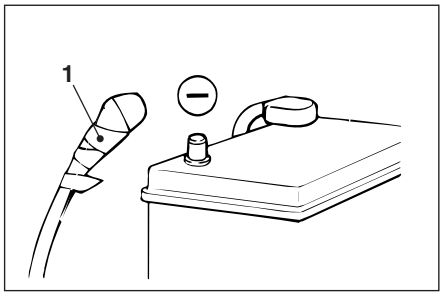

<Front>

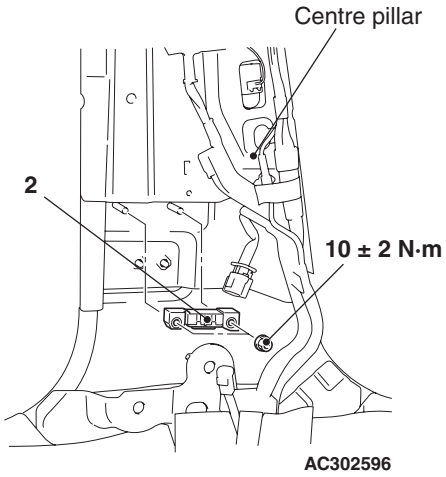

<Rear>

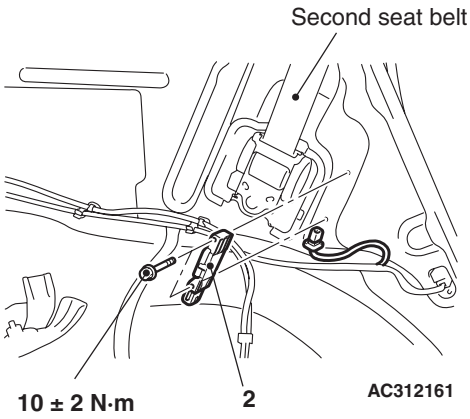

AC312534AB

Side impact sensor (front) removal steps

<<A>>
1. Negative battery cable connection
   - Centre pillar trim lower (Refer to GROUP 52A, Interior trim P.52A-10.)
   - Seat belt pre-tensioner (Refer to P.52B-350.)
2. Side impact sensor (front)

Side impact sensor (front) installation steps

>>A<<
- Pre-installation inspection

>>B<<
2. Side impact sensor (front)
   - Seat belt pre-tensioner (Refer to P.52B-350.)
   - Centre pillar trim lower (Refer to GROUP 52A, Interior trim P.52A-10.)

Main Index
Group TOC

Side impact sensor (front) installation steps (Continued)

1. Negative battery cable connection

>>C<<
- Post-installation inspection

Side impact sensor (rear) removal steps <Except vehicles for Hong Kong and Singapore>

<<A>>
1. Negative battery cable connection
- Third seat assembly (Refer to GROUP 52A, Third seat P.52A-35.)
- Quarter trim lower (Refer to GROUP 52A, Interior trim P.52A-10.)
2. Side impact sensor (rear)

Side impact sensor (rear) installation steps <Except vehicles Hong Kong and Singapore>

>>A<<
- Pre-installation inspection

>>B<<
2. Side impact sensor (rear)

Side impact sensor (rear) installation steps <Except vehicles Hong Kong and Singapore> (Continued)

- Quarter trim lower (Refer to GROUP 52A, Interior trim P.52A-10.)
- Third seat assembly (Refer to GROUP 52A, Third seat P.52A-35.)
1. Negative battery cable connection

>>C<<
- Post-installation inspection

NOTE: The figure shows the side impact sensor (LH).

REMOVAL SERVICE POINT

<<A>>NEGATIVE BATTERY CABLE DISCONNECTION

⚠ DANGER

Wait at least 60 seconds after disconnecting the battery cable before doing any further work (Refer to P.52B-5).

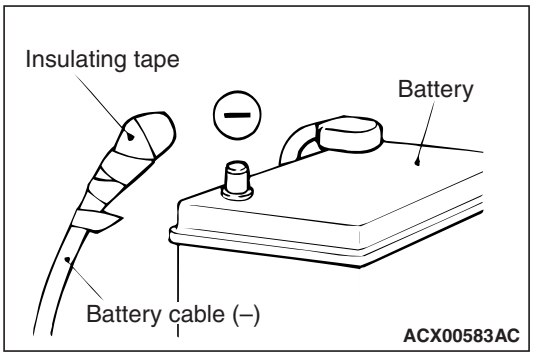

Disconnect the negative battery cable from the battery and tape the terminal to prevent accidental connection and air bag(s) deployment.

INSTALLATION SERVICE POINTS

>>A<< PRE-INSTALLATION INSPECTION

Even new side impact sensor requires inspection before installation (Refer to the previous item "INSPECTION" P.52B-349).

>>B<< SIDE IMPACT SENSOR INSTALLATION

⚠ WARNING

The side impact sensor, unless properly installed, does not operate properly, thereby resulting in serious injury or death of the vehicle's occupants.

>>C<< POST-INSTALLATION INSPECTION

1. Connect the negative battery cable.
2. Turn the ignition switch to "ON" position.

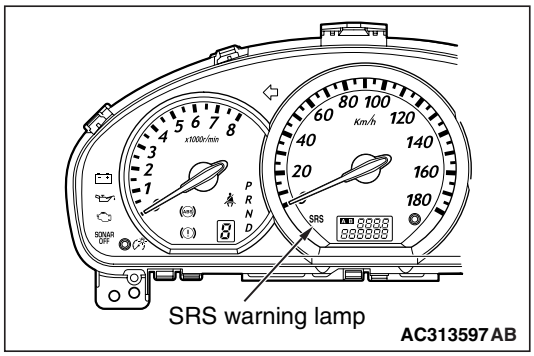

3. Does the SRS warning lamp illuminate for about 7 seconds, and then remain extinguished for at least 5 seconds after turning OFF?

Main Index
Group TOC

4. If no, refer to troubleshooting (Refer toP.52B-11 <Except vehicles for Hong Kong, Singapore, Australia and New Zealand> or P.52B-164 <Vehicles for Hong Kong, Singapore, Australia and New Zealand>).

INSPECTION

M1524004700541

⚠ WARNING

If any problems, replace the sensor.

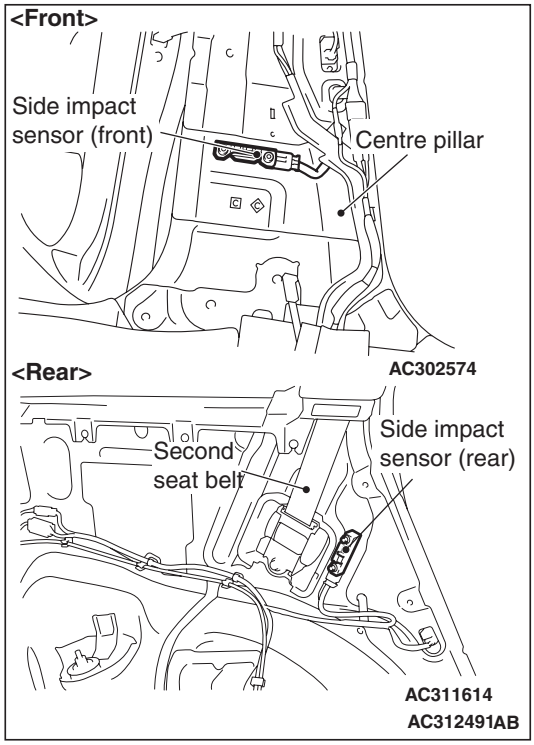

1. Check the side impact sensor and bracket for dents, cracks or deformation.
2. Check the connector for damage, and terminal for deformation.
3. Check the centre pillar and the quarter inner panel for deformation or corrosion.

NOTE: For the checks other than the items above, refer to Troubleshooting (Refer to P.52B-11 <Except vehicles for Hong Kong, Singapore, Australia and New Zealand>, P.52B-164 <Vehicles for Hong Kong, Singapore, Australia and New Zealand>).

Main Index
Group TOC

SEAT BELTS WITH PRE-TENSIONER

REMOVAL AND INSTALLATION

M1524004100635

⚠ WARNING

- ***Never attempt to disassemble or repair the seat belt pre-tensioner. If faulty, replace it.***
- ***Be extremely careful when handling the seat with pre-tensioner. Do not subject it to shocks, drop it, bring it close to strong magnets or allow contact with water, grease or oil. Always replace it with a new part if any dents, cracks or deformation is found.***
- ***Do not place anything on top of the seat belt pre-tensioner.***
- ***Do not expose the seat belt pre-tensioner to temperatures over 90°C.***
- ***After operating the seat belt pre-tensioner, replace the seat belt pre-tensioner with a new part.***
- ***Gloves and protective goggles should be worn when handling a seat belt pre-tensioner once it has been used.***
- ***If disposing of a seat belt with pre-tensioner which has not yet been operated, its seat belt pre-tensioner should be operated first before disposal (Refer to P.52B-356).***

Pre-removal Operation
- Turn the ignition switch to the "LOCK" (OFF) position.

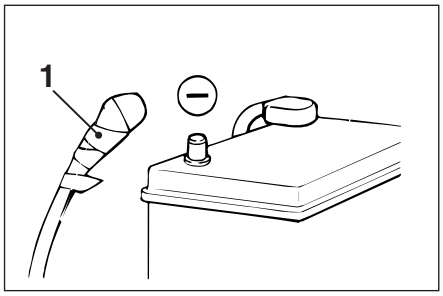

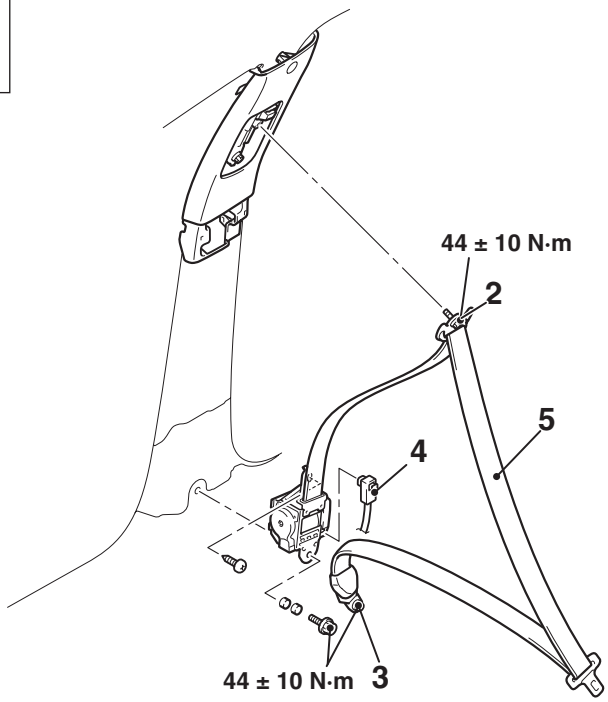

AC312586AB

Main Index
Group TOC

Removal steps

<<A>> 1. Negative battery cable connection
2. Seat belt shoulder anchor bolt
3. Seat belt lower anchor bolt
- Centre pillar trim, lower (Refer to GROUP 52A, Trims P.52A-10.)

<<B>> 4. Pre-tensioner connector connection
5. Seat belt with pre-tensioner

Installation steps

>>A<< - Pre-installation inspection
5. Seat belt with pre-tensioner

Installation steps (Continued)

>>B<< 4. Pre-tensioner connector connection
- Centre pillar trim, lower (Refer to GROUP 52A, Trims P.52A-10.)

3. Seat belt lower anchor bolt
2. Seat belt shoulder anchor bolt
1. Negative battery cable connection

>>C<< - Post-installation inspection

NOTE: The figure shows the seat belt with pre-tensioner (RH).

REMOVAL SERVICE POINTS

<<A>> NEGATIVE BATTERY CABLE DISCONNECTION

⚠ DANGER

Wait at least 60 seconds after disconnecting the battery cable before doing any further work (Refer to P.52B-5).

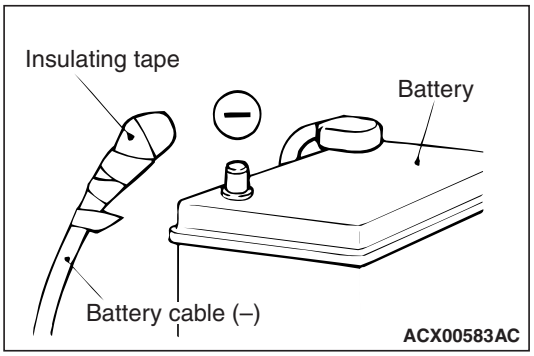

Disconnect the negative battery cable from the battery and tape the terminal to prevent accidental connection and air bag(s) deployment.

<<B>> PRE-TENSIONER CONNECTOR DISCONNECTION

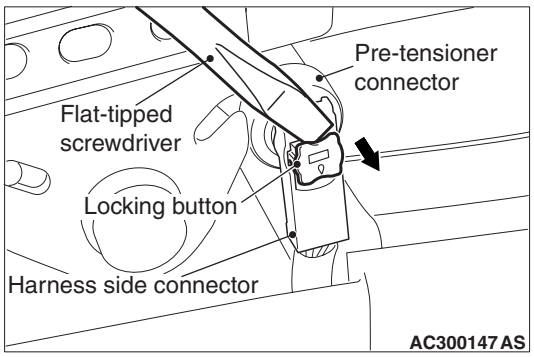

1. Use a flat-tipped screwdriver to pull out forward and unlock the locking button of the harness-side connector.
2. Disconnect the pre-tensioner connector.

INSTALLATION SERVICE POINTS

>>A<< PRE-INSTALLATION INSPECTION

⚠ WARNING

Dispose of Pre-tensioner only according to the specified procedure (Refer to P.52B-356).

1. When installing the new seat belt with pre-tensioner, refer to ”INSPECTION”(P.52B-352).
2. Connect the negative battery cable.

⚠ CAUTION

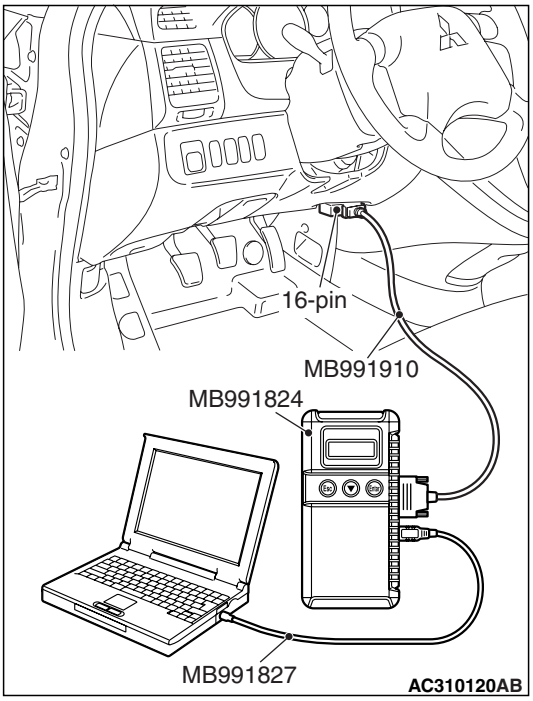

To prevent damage to M.U.T.-III, always turn the ignition switch to the "LOCK" (OFF) position before connecting or disconnecting M.U.T.-III.

3. Connect M.U.T.-III to the diagnosis connector.
4. Turn the ignition switch to the “ON” position.
5. Check diagnosis codes using M.U.T.-III to ensure entire SRS operates properly.

Main Index
Group TOC

At this time, check that no diagnosis code except B1460 and B1470 are set.

⚠ ***DANGER***

Wait at least 60 seconds after disconnecting the battery cable before doing any further work. (Refer to P.52B-5).

6. Turn the ignition switch to the "LOCK" (OFF) position. Disconnect the negative battery cable and tape the terminal to prevent accidental connection and air bags deployment.

>>B<< PRE-TENSIONER CONNECTOR CONNECTION

Connect the pre-tensioner connector then securely lock the locking button of the harness-side connector.

>> C<< POST-INSTALLATION INSPECTION

1. Connect the negative battery cable.
2. Turn the ignition switch to "ON" position.

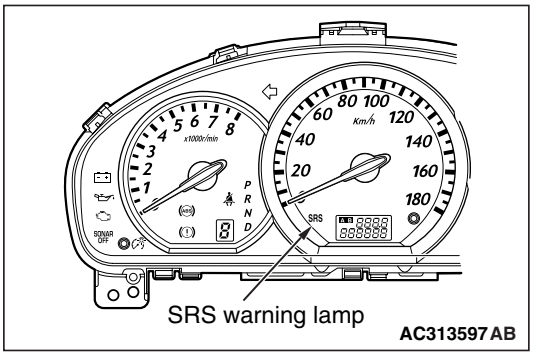

3. Does the SRS warning lamp illuminate for about 7 seconds, and then remain extinguished for at least 5 seconds after turning OFF?
4. If no, refer to troubleshooting (Refer to P.52B-11 <Except vehicles for Hong Kong, Singapore, Australia and New Zealand > or P.52B-164 <Vehicles for Hong Kong, Singapore, Australia and New Zealand>).

INSPECTION

M1524004200331

⚠ ***WARNING***

- ***If any component damage is found during the following inspection, replace the seat belt with pre-tensioner with a new one. Dispose of the old one according to the specified procedure (Refer to P.52B-356).***
- ***Never attempt to measure the circuit resistance of the seat belt pre-tensioner even if you are using the specified tester. If the circuit resistance is measured with a tester, accidental seat belt pre-tensioner operation will result in serious personal injury.***

1. Check the pre-tensioner deployment section for dents and deformation.
2. Check the harness and connector for damage and the terminals for deformation.

Main Index
Group TOC

SEAT SLIDE SENSOR <Vehicles with dual stage air bags>

REMOVAL AND INSTALLATION

M1524025300117

⚠ WARNING

- ***Never attempt to disassemble or repair the seat slide sensor. If faulty, replace it.***
- ***Do not drop or subject the seat slide sensor to impact or vibration. Replace the seat slide sensor, if dents, cracking, deformation, or rust are present.***

Pre-removal Operation
- Turn the ignition switch to the "LOCK" (OFF) position.

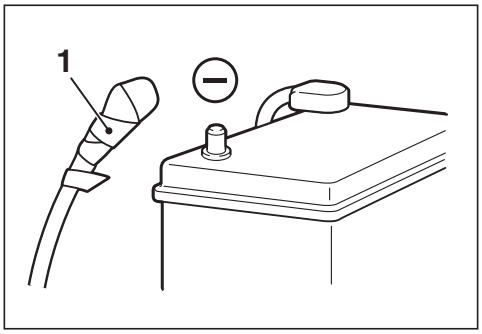

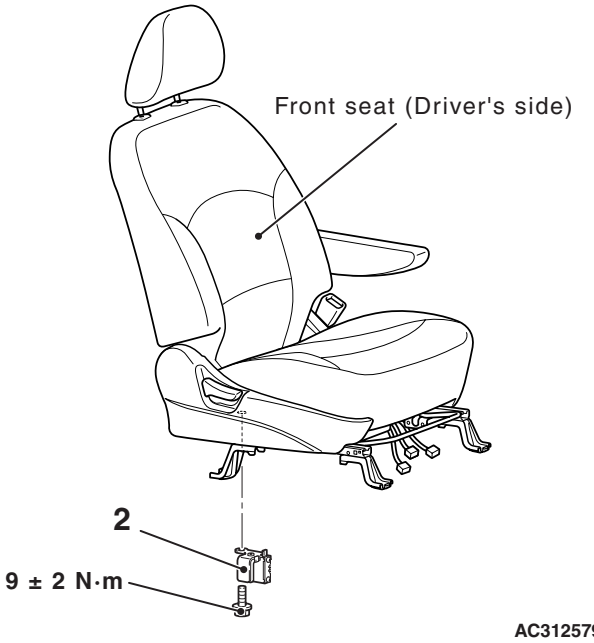

AC313786AB

Removal steps

<<A>>
1. Negative battery cable connection
   - Front seat <Driver's side> (Refer to GROUP 52A, Front seat assembly P.52A-21).
2. Seat slide sensor

Installation steps

>>A<<
- Pre-installation inspection

>>B<<
2. Seat slide sensor
   - Front seat <Driver's side> (Refer to GROUP 52A, Front seat assembly P.52A-21).
1. Negative battery cable connection

>>C<<
- Post-installation inspection

Main Index
Group TOC

REMOVAL SERVICE POINT

<<A>> NEGATIVE BATTERY CABLE DISCONNECTION

⚠ ***DANGER***

Wait at least 60 seconds after disconnecting the battery cable before doing any further work. (Refer to P.52B-5).

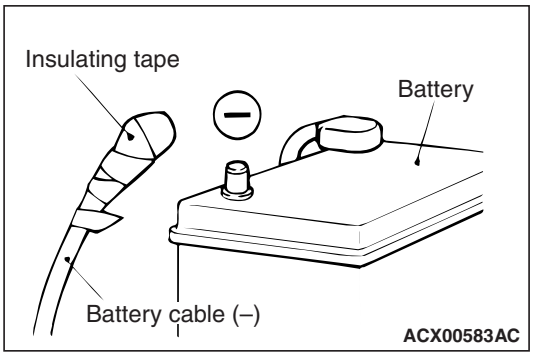

Disconnect the negative battery cable from the battery and tape the terminal to prevent accidental connection and air bag deployment.

INSTALLATION SERVICE POINTS

>>A<< PRE-INSTALLATION INSPECTION

Check the seat slide sensor for dents, breakage and bending and measure the resistance between the terminals, even when installing a new seat slide sensor.

>>B<< SEAT SLIDE SENSOR INSTALLATION

⚠ ***WARNING***

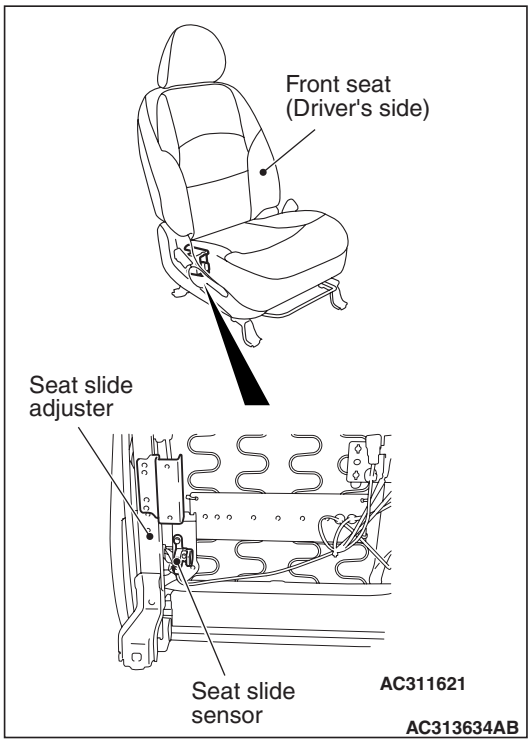

If the seat slide sensor is not installed securely and correctly, the driver's air bag may not operate normally.

Securely connect the connector.

>>C<< POST-INSTALLATION INSPECTION

1. Reconnect the negative battery cable.
2. Turn the ignition switch to the "ON" position.

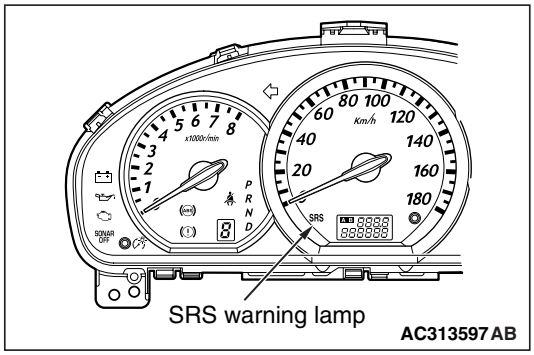

3. Does the SRS warning lamp illuminate for about 7 seconds, and go out?
4. If yes, the SRS system is functioning properly. If not, refer to P.52B-163.

Main Index
Group TOC

INSPECTION

M1524025400103

⚠ ***WARNING***

If a dent, crack, deformation or rust is detected, replace with a new sensor.

NOTE: For checking of the seat slide sensor other than described below, refer to the section concerning SRS diagnosis (Refer to P.52B-164 <Vehicles for Hong Kong, Singapore, Australia and New Zealand>).

1. Check the seat slide sensor for dent, cracks or deformation.
2. Check the connector for damage, and terminals for deformation.
3. Check that there is no bending or corrosion in the slide adjuster.

Main Index
Group TOC

AIR BAG MODULE AND SEAT BELT PRE-TENSIONER DISPOSAL PROCEDURES

M1524001200912

Before disposing of an air bag or a vehicle equipped with an air bag, follow the procedures below to deploy the air bag.

UNDEPLOYED AIR BAG MODULE DISPOSAL

⚠ WARNING

- ***If the vehicle is to be scrapped or otherwise disposed of, deploy the air bags and operate the seat belt pre-tensioner inside the vehicle. If the vehicle will continue to be used and only the air bag modules and seat belt pre-tensioner are to be disposed of, deploy the air bags and operate the seat belt pre-tensioner outside the vehicle.***
- ***Since a large amount of smoke is produced when the air bag is deployed and the seat belt pre-tensioner is operated, avoid residential areas whenever possible.***
- ***Since there is loud noise when the air bags are deployed and when the seat belt pre-tensioner are operated, avoid residential areas whenever possible. If anyone is nearby, give warning of the impending noise.***
- ***Suitable ear protection should be worn by personnel performing these procedures or by people in the immediate area.***

DEPLOYMENT INSIDE THE VEHICLE (WHEN DISPOSING OF A VEHICLE) <AIR BAG MODULE (DRIVER'S SIDE)>

1. Move the vehicle to an isolated spot.

⚠ DANGER

Wait at least 60 seconds after the disconnection of the battery cable before any further job (Refer to P.52B-5).

2. Disconnect the negative and positive battery cables from the battery terminals, and then remove the battery from the vehicle.
3. Remove the column cover lower (Refer to GROUP 37, Steering shaft P.37-17).

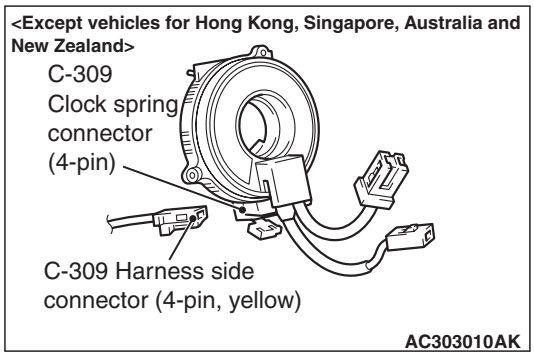

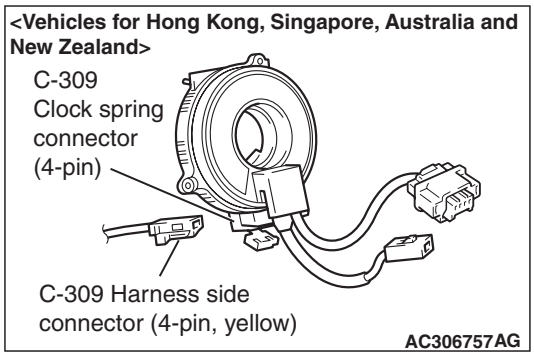

4. Remove the connection between the C-309 clock spring connector (4-pin) and the harness side connector (4-pin, yellow).

   NOTE: Once disconnected from the instrument panel wiring harness, both electrodes of the clock spring connector short automatically. This prevents the driver's air bag from accidental deployment caused by static, etc.

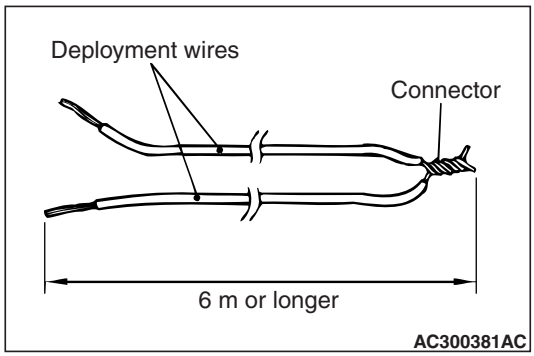

5. Obtain two suitable wires, which are 6 meters or longer, as deployment wires. Then connect the wires at one end to short.
6. Touch the vehicle's body with bare hands to discharge static in you.

   NOTE: This prevents the air bag from unintentional deployment caused by static electricity, etc.

Main Index
Group TOC

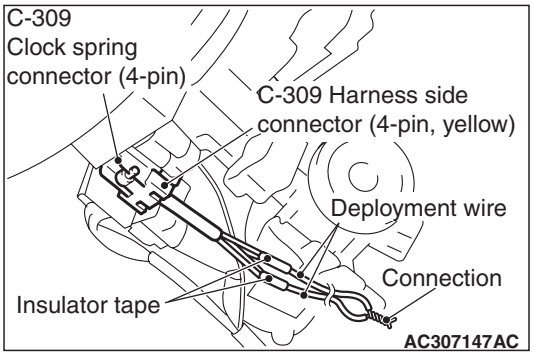

7. Cut with a pliers, etc. the instrument panel wiring harness shown in the figure of the instructions, while the C-309 clock spring connector is disconnected.

   NOTE: The disconnection location should be sufficiently away from the C-309 harness side connector with consideration to the expansion harness connection location upon disconnections.

8. Connect the deployment wires on the two instrument panel wiring harnesses disconnected, cover the connection areas with insulation tape and then pull out the deployment wires outside the vehicle.
9. Connect the C-309 harness side connector connected with an expansion harness to the C-309 clock spring connector.

⚠ WARNING

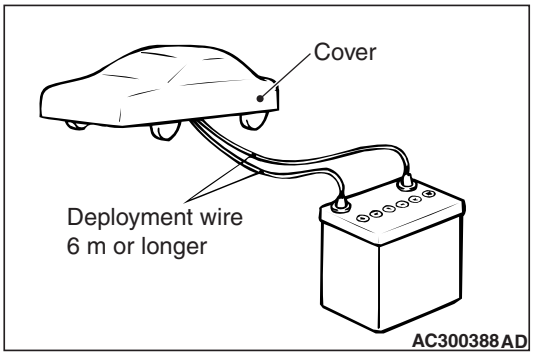

If the glass is scratched, air bag deployment could cause it to crack and fly out of the vehicle, so always put a cover over the vehicle.

10. To suppress the operation sound as much as possible completely close all door windows, close the doors and put the cover on the vehicle.

⚠ WARNING

- ***Before deploying the air bag in this manner, first check to be sure that there is no one in or near the vehicle. Wear safety glasses.***
- ***The inflator will be quite hot immediately following the deployment, so wait at least 30 minutes to allow it to cool before attempting to handle it. Although not poisonous, do not inhale gas from the air bag deployment. See Deployed Air Bag Module and Operated Seat Belt Pre-tensioner Disposal (Refer to P.52B-372) for post-deployment handling instructions.***
- ***If the air bag module fails to deploy, do not go near the module. Contact your distributor.***

11. At a location as far away from the vehicle as possible, disconnect the two connected wires from each other, and connect them to the two terminals of the battery (which has been removed from the vehicle) to deploy the air bag.
12. After deployment, dispose of the air bag module according to the Deployed Air Bag Module and Operated Seat Belt Pre-tensioner Disposal (Refer to P.52B-372).

Main Index
Group TOC

DEPLOYMENT INSIDE THE VEHICLE (WHEN DISPOSING OF A VEHICLE) <AIR BAG MODULE (FRONT PASSENGER'S SIDE)>

1. Move the vehicle to an isolated spot.

⚠ DANGER

Wait at least 60 seconds after the disconnection of the battery cable before any further job (Refer to P.52B-5).

2. Disconnect the negative and positive battery cables from the battery terminals, and then remove the battery from the vehicle.
3. Remove the glove box (Refer to GROUP 52A, Instrument Panel P.52A-2).

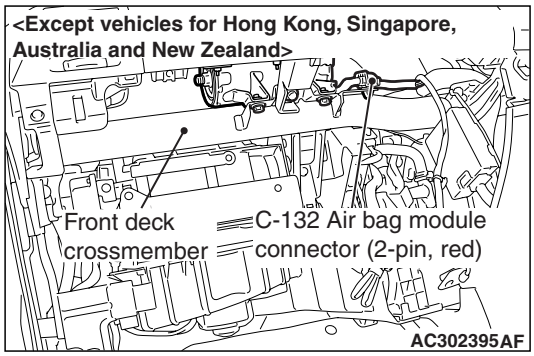

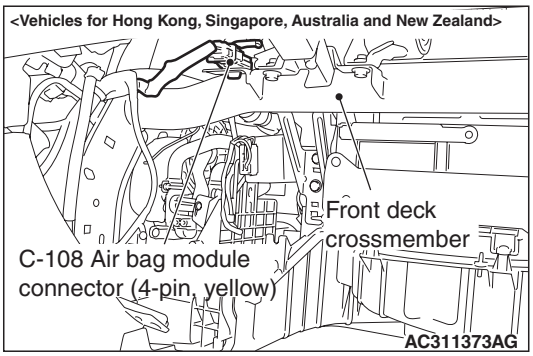

4. Remove the connection between the C-132 <Except vehicles for Hong Kong, Singapore, Australia and New Zealand> air bag module (front passenger's side) connector (2-pin, red) or C-108 <Vehicles for Hong Kong, Singapore, Australia and New Zealand>air bag module (front passenger's side) connector (4-pin, yellow) and the harness side connector (2-pin, red or 4-pin, yellow).

NOTE: If the C-132 <Except vehicles for Hong Kong, Singapore, Australia and New Zealand> or C-108 <Vehicles for Hong Kong, Singapore, Australia and New Zealand> air bag module connector is disconnected, both electrodes of the air bag module connector will be automatically shorted to prevent unintended deployment of the air bag due to static electricity, etc.

5. Use the deployment wires as follows.

<Except vehicles for Hong Kong, Singapore, Australia and Singapore>

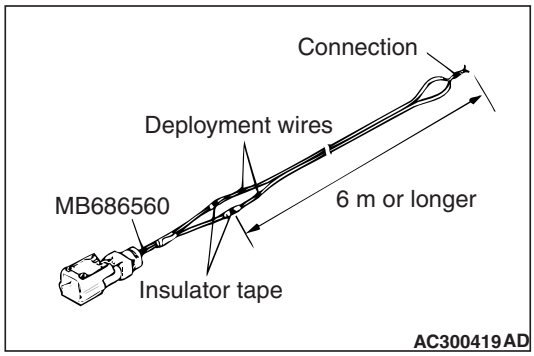

Connect deployment wires longer than 6 m to each special tool SRS air bag adapter harness (MB686560) and insulate the connections with insulator tape. Also, connect the deployment wires in the other ends to short, thereby preventing the passenger's air bag from accidental deployment caused by static etc.

<Vehicles for Hong Kong, Singapore, Australia and Singapore>

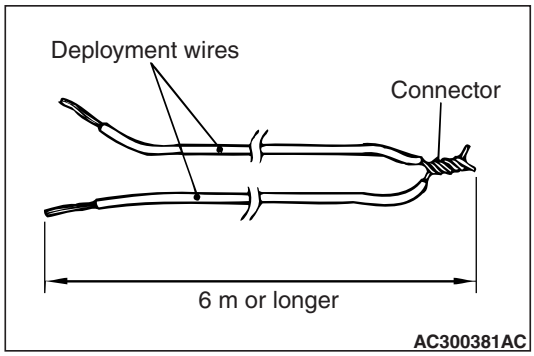

Obtain two suitable wires, which are 6 meters or longer, as deployment wires. Then connect the wires at one end to short.

NOTE: This prevents the air bag from unintentional deployment caused by static electricity, etc.

⚠ CAUTION

Never fail to do Step 6 in order to prevent accidental deployment caused by static.

6. Touch the vehicle's body with your bare hands to discharge static electricity.

Main Index
Group TOC

7. Connect the deployment wires to the air bag as follows.

<Except vehicles for Hong Kong, Singapore, Australia and Singapore>

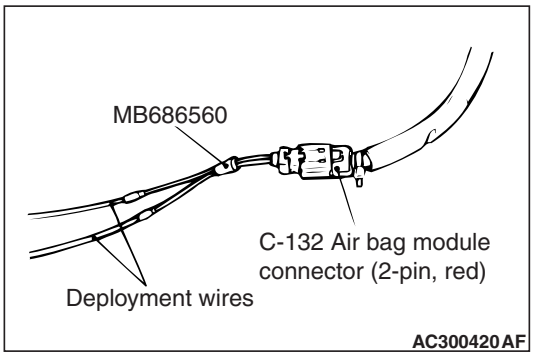

Connect the C-132 air bag module (front passenger's side) connector (2-pin, red) to special tool SRS air bag adapter harness (MB686560) and move the deployment wire out of the vehicle.

<Vehicles for Hong Kong, Singapore, Australia and Singapore>

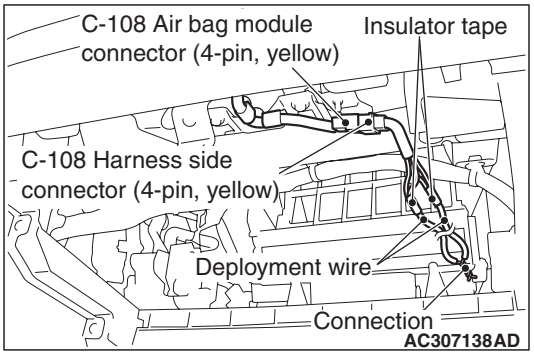

Cut the instrument panel wiring harness (4-pin, yellow) shown in the figure, while the C-108 air bag module connector (4-pin) is disconnected.

NOTE: The disconnection location should be sufficiently away from the C-108 harness side connector with consideration to the expansion harness connection location upon disconnection.

Individually connect a harness to the four disconnected harnesses, cover the connection areas with insulation tape, and then pull out the expansion harness outside the vehicle.

Connect the C-108 harness side connector connected with the expansion harness to the C-108 air bag module connector.

⚠ WARNING

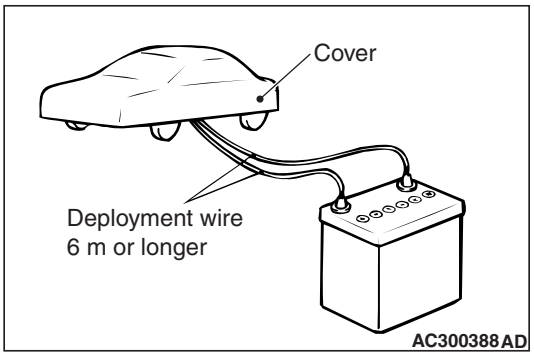

If the glass is scratched, air bag deployment could cause it to crack and fly out of the vehicle, so always put a cover over the vehicle.

8. To suppress the operation sound as much as possible completely close all door windows, close the doors and put the cover on the vehicle.

⚠ WARNING

- ***Before deploying the air bag in this manner, first check to be sure that there is no one in or near the vehicle. Wear safety glasses.***
- ***The inflator will be quite hot immediately following the deployment, so wait at least 30 minutes to allow it to cool before attempting to handle it. Although not poisonous, do not inhale gas from the air bag deployment. See Deployed Air Bag Module and Operated Seat Belt Pre-tensioner Disposal (Refer to P.52B-372) for post-deployment handling instructions.***
- ***If the air bag module fails to deploy, do not go near the module. Contact your distributor.***

9. At a location as far away from the vehicle as possible, disconnect the two connected wires from each other, and connect them to the two terminals of the battery (which has been removed from the vehicle) to deploy the air bag.
10. After deployment, dispose of the air bag module according to the Deployed Air Bag Module and Operated Seat Belt Pre-tensioner Disposal (Refer to P.52B-372).

Main Index
Group TOC

DEPLOYMENT INSIDE THE VEHICLE (WHEN DISPOSING OF A VEHICLE) <SIDE-AIRBAG MODULE>

1. Move the vehicle to an isolated spot.

⚠ WARNING

Wait at least 60 seconds after disconnecting the battery cables before doing any further work (Refer to P.52B-5).

2. Disconnect the negative and positive battery cables from the battery terminals, and then remove the battery from the vehicle.

⚠ WARNING

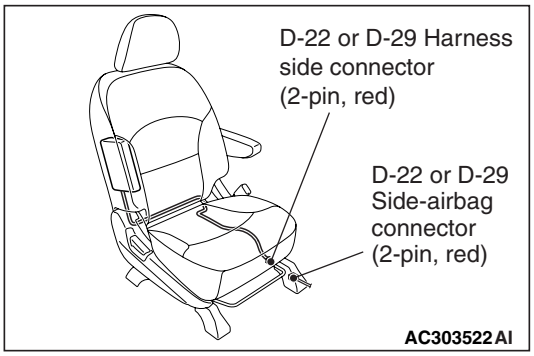

The side-airbag modules for both the driver's side and passenger's side should be deployed.

3. Remove the connection between the D-22 or D-29 side-airbag module connector (2-pin, red) and the harness side connector (2-pin, red).

   NOTE: Once disconnected from the side-airbag wiring harness, both electrode of the side-airbag module connector short automatically. This prevents the side-airbag from accidental deployment caused by static etc.

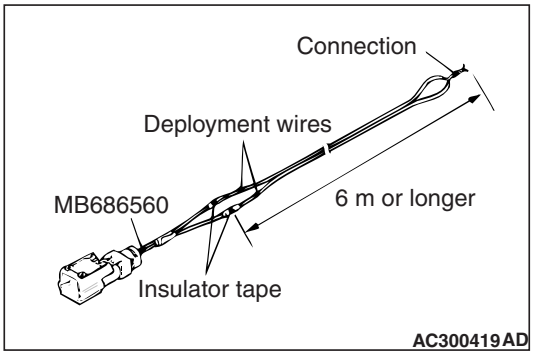

4. Connect deployment wires longer than 6 m to each special tool SRS air bag adapter harness (MB686560) and insulate the connections with insulator tape. Also, connect the deployment wires in the other ends to short, thereby preventing the passenger's air bag from accidental deployment caused by static etc.

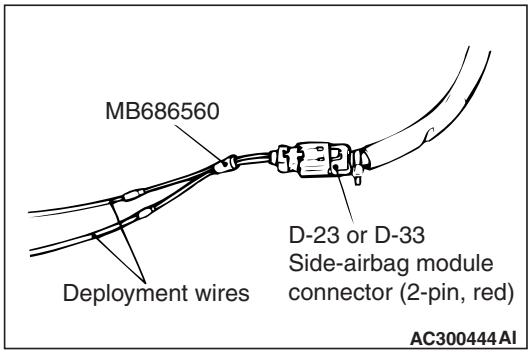

5. Connect the D-22 or D-29 side-airbag module connector (2-pin, red) to special tool SRS air bag adapter harness (MB686560) and move the deployment wire out of the vehicle.

⚠ WARNING

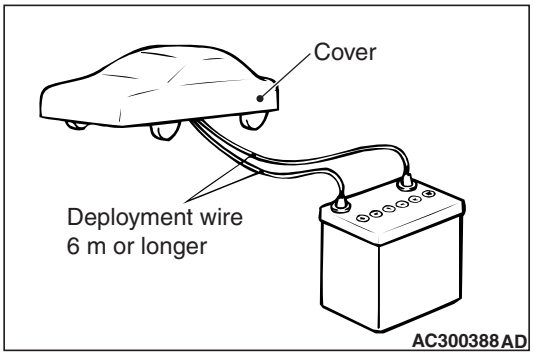

If the glass is scratched, air bag deployment could cause it to crack and fly out of the vehicle, so always put a cover over the vehicle.

6. To suppress the operation sound as much as possible completely close all door windows, close the doors and put the vehicle.

Main Index
Group TOC

⚠ ***WARNING***

- ***Before deploying the air bag in this manner, first check to be sure that there is no one in or near the vehicle. Wear safety glasses.***
- ***The inflator will be quite hot immediately following the deployment, so wait at least 30 minutes to allow it to cool before attempting to handle it. Although not poisonous, do not inhale gas from the air bag deployment. See Deployed Air Bag Module and Operated Seat Belt Pre-tensioner Disposal (Refer to P.52B-372) for post-deployment handling instructions.***
- ***If the air bag module fails to deploy, do not go near the module. Contact your distributor.***

7. At a location as far away from the vehicle as possible, disconnect the two connected wires from each other, and connect them to the two terminals of the battery (which has been removed from the vehicle) to deploy the air bag.
8. After deployment, dispose of the front seatback assembly (air bag module) according to the Deployed Air Bag Module and Operated Seat Belt Pre-tensioner Disposal (Refer to P.52B-372).

DEPLOYMENT INSIDE THE VEHICLE (WHEN DISPOSING OF A VEHICLE) <CURTAIN AIR BAG MODULE>

1. Move the vehicle to an isolated spot.

⚠ ***WARNING***

Wait at least 60 seconds after disconnecting the battery cables before doing any further work (Refer to P.52B-5).

2. Disconnect the negative and positive battery cables from the battery terminals, and then remove the battery from the vehicle.

⚠ ***WARNING***

The curtain air bag modules for both the right side and left side should be deployed.

3. Remove the headlining (Refer to GROUP 52A, Headlining P.52A-17).

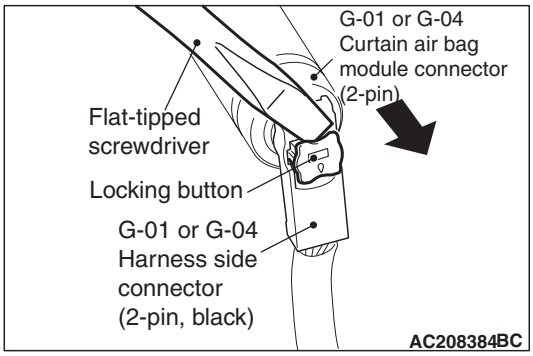

4. Execute the following steps to disconnect the connection between G-01 or G-04 curtain air bag module connector (2-pin) and harness side connector (2-pin, black).

   NOTE: Once disconnected from the roof wiring harness, both electrode of the curtain air bag module connector short automatically. This prevents the curtain air bag module from accidental deployment caused by static etc.

   (1) Use a flat-tipped screwdriver to pull out forward and unlock the locking button of the harness-side connector (2-pin, black).

   (2) Disconnect the G-01 or G-04 harness side connector.

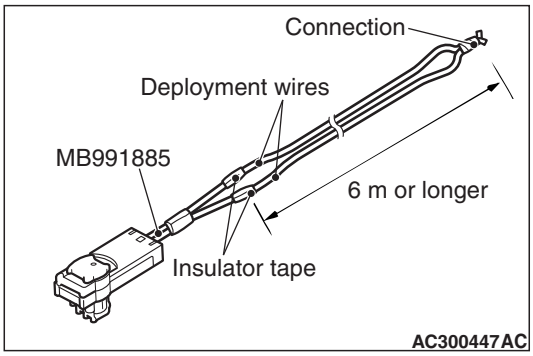

5. Connect deployment wires longer than 6 m to each special tool SRS air bag adapter harness (MB991885) and insulate the connections with insulator tape. Also, connect the deployment wires in the other ends to short, thereby preventing the passenger's air bag from accidental deployment caused by static etc.

Main Index
Group TOC

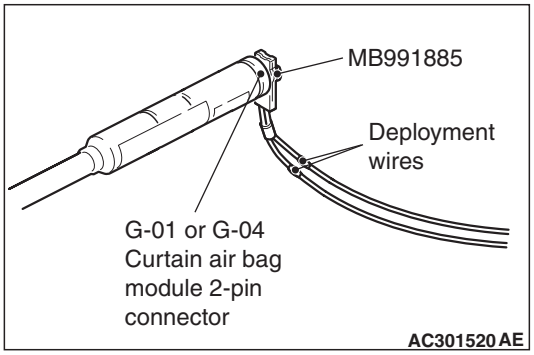

6. Connect the G-01 or G-04 curtain air bag module 2-pin connector to special tool SRS air bag adapter harness (MB991885) and move the deployment harness out of the vehicle.

⚠ WARNING

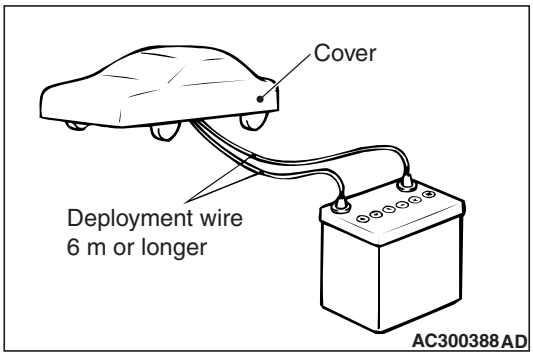

If the glass is scratched, air bag deployment could cause it to crack and fly out of the vehicle, so always put a cover over the vehicle.

7. To suppress the operation sound as much as possible completely close all door windows, close the doors and put the vehicle.

⚠ WARNING

- ***Before deploying the air bag in this manner, first check to be sure that there is no one in or near the vehicle. Wear safety glasses.***
- ***The inflator will be quite hot immediately following the deployment, so wait at least 30 minutes to allow it to cool before attempting to handle it. Although not poisonous, do not inhale gas from the air bag deployment. See Deployed Air Bag Module and Operated Seat Belt Pre-tensioner Disposal (Refer to P.52B-372) for post-deployment handling instructions.***
- ***If the air bag module fails to deploy, do not go near the module. Contact your distributor.***

8. At a location as far away from the vehicle as possible, disconnect the two connected wires from each other, and connect them to the two terminals of the battery (which has been removed from the vehicle) to deploy the air bag.
9. After deployment, dispose of the curtain air bag module assembly according to the Deployed Air Bag Module and Operated Seat Belt Pre-tensioner Disposal (Refer to P.52B-372).

DEPLOYMENT INSIDE THE VEHICLE (WHEN DISPOSING OF A VEHICLE) <SEAT BELT PRE-TENSIONER>

1. Move the vehicle to an isolated spot.

⚠ DANGER

Wait at least 60 seconds after disconnecting the battery cables before doing any further work (Refer to P.52B-5).

2. Disconnect the negative and positive battery cables from the battery terminals, and then remove the battery from the vehicle.
3. Remove the centre pillar lower trim (Refer to GROUP 52A, Trim P.52A-10).

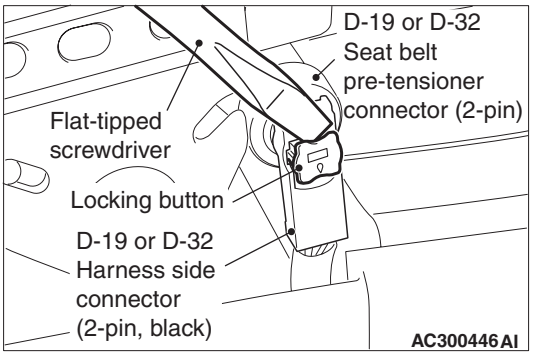

4. Execute the following steps to disconnect the connection between D-19 or D-32 seat belt pre-tensioner connector (2-pin) and harness side connector (2-pin, black).

   NOTE: Once disconnected from the seat belt pre-tensioner wiring harness, both electrode of the side-airbag module connector short automatically. This prevents the seat belt pre-tensioner from accidental deployment caused by static etc.

   (1) Use a flat-tipped screwdriver to pull out forward and unlock the locking button of the harness-side connector (2-pin, black).

   (2) Disconnect the D-19 or D-32 harness side connector.

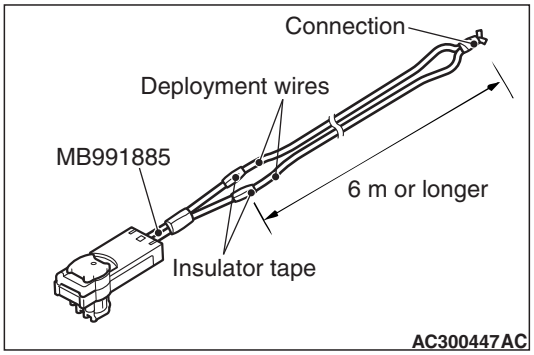

5. Connect deployment wires longer than 6 m to each special tool SRS air bag adapter harness (MB991885) and insulate the connections with insulator tape. Also, connect the deployment wires in the other ends to short, thereby preventing the seat belt pre-tensioner from accidental deployment caused by static etc.

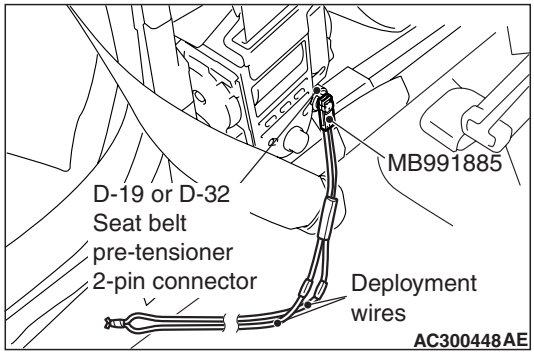

6. Connect the D-19 or D-32 seat belt pre-tensioner 2-pin connector (red) to special tool SRS air bag adapter harness (MB991885) and move the deployment harness out of the vehicle.

⚠ WARNING

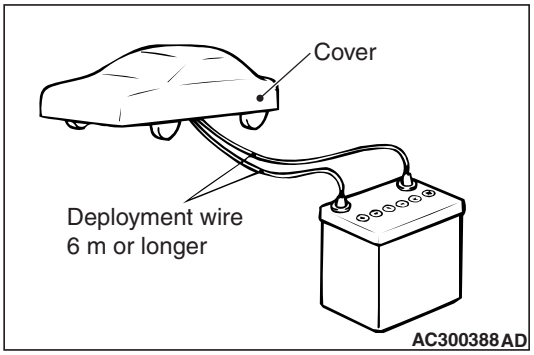

If the glass is scratched, seat belt pre-tensioner operation could cause it to crack and fly out of the vehicle, so always put a cover over the vehicle.

7. To suppress the operation sound as much as possible completely close all door windows, close the doors and put the cover on the vehicle.

Main Index
Group TOC

⚠ WARNING

- ***Before operating the seat belt pre-tensioner in this manner, first check to be sure that there is no one in or near the vehicle. Wear safety glasses.***
- ***The inflator will be quite hot immediately following the operation, so wait at least 30 minutes to allow it to cool before attempting to handle it. Although no poisonous, do not inhale gas from the seat belt pre-tensioner operation. See Deployed Air Bag and Operated Seat Belt pre-tensioner Disposal (Refer to P.52B-372) for post-operation handling instructions.***
- ***If the seat belt pre-tensioner fails to operate, do not go near the seat belt pre-tensioner. Contact your distributor.***

8. At a location as far away from the vehicle as possible, disconnect the two connected wires from each the, and connect them to the two terminals of the battery (which has been removed from the vehicle) to operating the seat belt pre-tensioner.
9. After operation, dispose of the seat belt pre-tensioner according to the Deployed Air Bag Module operated seat belt pre-tensioner Disposal (Refer to P.52B-372).

DEPLOYMENT OUTSIDE THE VEHICLE <AIR BAG MODULE (DRIVER'S SIDE)>

⚠ WARNING

- ***This should be carried out in a wide, flat area at least 6 m away from obstacles and other people.***
- ***Do not deploy outside if wind is high. Even in a soft wind, ignite to windward of the air bag modules.***

⚠ DANGER

Wait at least 60 seconds after disconnecting the battery cables before doing any further work (Refer to P.52B-5).

1. Disconnect the negative and positive battery cables from the battery terminals, and then remove the battery from the vehicle.

⚠ WARNING

Once disconnected, both electrodes of the driver's air bag module connector short automatically to prevent accidental deployment caused by static etc. Still, in consideration of the accidental deployment, store the air bag module on flat place with deployment surface facing up. Also, do not put anything on it.

2. Remove the air bag module from the vehicle (Refer to P.52B-334).

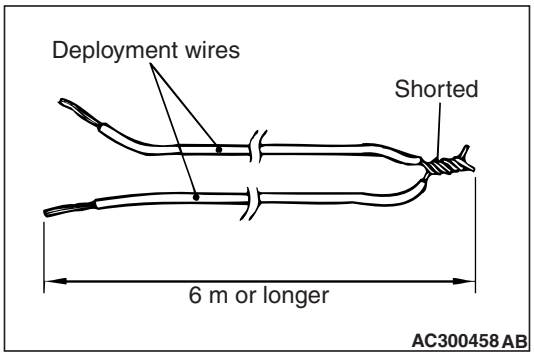

3. Obtain two suitable wires, which are 6 meters or longer, as deployment wires. Then connect the wires at one end to short.

⚠ CAUTION

Never fail to do Step 4 in order to prevent accidental deployment caused by static.

4. Touch the vehicle's body with bare hands to discharge static in you.
5. Connect the deployment wires to the air bag as follows.

<Except vehicles for Hong Kong, Singapore, Australia and New Zealand>

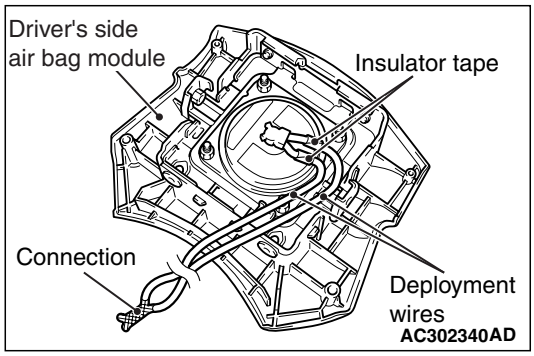

Cut off the air bag module wiring harness connector from the wiring harness with nippers. Individually connect a harness on the two harnesses disconnected, cover the connection areas with insulator tape.

Main Index
Group TOC

<Vehicles for Hong Kong, Singapore, Australia and New Zealand>

⚠ CAUTION

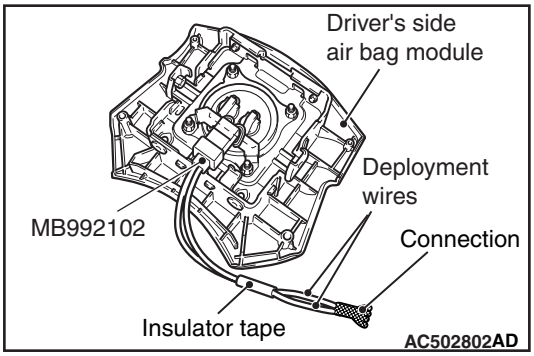

In case of the dual inflator type's air bag module, be sure to deploy the both two air bags at the same time. Because another air bag may be deployed suddenly when deploying the one air bag.

Connect deployment wires longer than 6 m to each special tool SRS air bag adapter harness (MB992102) and insulate the connections with insulator tape. Also, connect the deployment wires in the other ends to short, thereby preventing the passenger's air bag from accidental deployment caused by static etc.

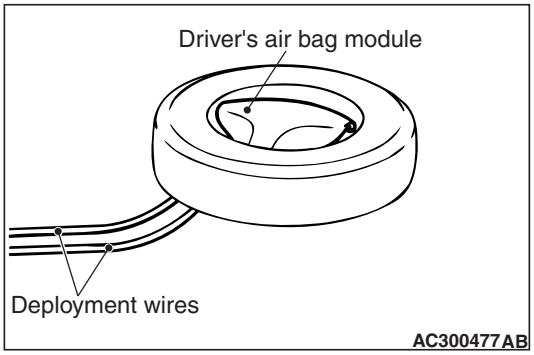

6. Install a nut to the bolt behind the driver's air bag module and tie thick wire there for securing.
7. Route the deployment wires connected to the driver's air bag module beneath an old tyre and wheel assembly. Then, using the wire tied to the bolt, secure the driver's air bag module to the tyre and wheel assembly with the deployment surface facing up.

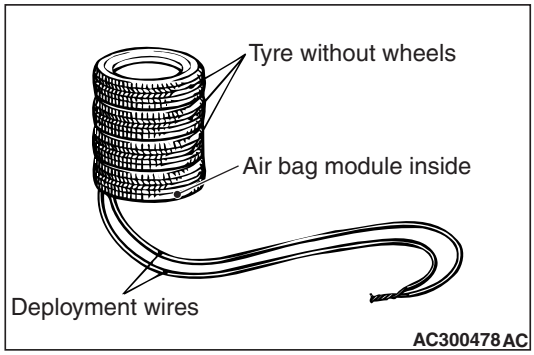

8. Place three old tyres without wheels on the tyre secured with the driver's air bag module.

⚠ *WARNING*

- ***Before deployment, check carefully to be sure that no one is nearby.***
- ***The inflator will be quite hot immediately following the deployment, so wait at least 30 minutes to allow it to cool before attempting to handle it. Although not poisonous, do not inhale gas from air bag deployment. See Deployed Air Bag Module and Operated Seat Belt Pre-tensioner Disposal (Refer to P.52B-372) for post-deployment handling instructions.***
- ***If the air bag fails to deploy, do not go near the module. Contact your distributor.***

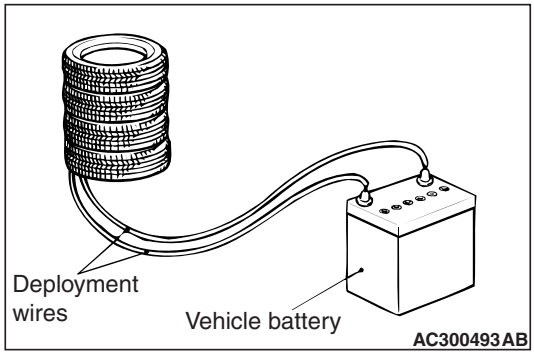

9. At a location as far away from the air bag module as possible, and from a shielded position, disconnect the two connected wires from each other, and connect them, to the two terminals of the battery (which has been removed from the vehicle) to deploy the air bag.
10. Discard the deployed air bag module as specified in Deployed Air Bag Module and Operated Seat Belt Pre-tensioner Disposal (Refer to P.52B-372).

Main Index
Group TOC

DEPLOYMENT OUTSIDE THE VEHICLE <AIR BAG MODULE (FRONT PASSENGER'S SIDE)>

⚠ WARNING

- ***This should be carried out in a wide, flat area at least 6 m away from obstacles and other people.***
- ***Do not deploy outside if wind is high. Even in a soft wind, ignite to windward of the air bag modules.***

⚠ DANGER

Wait at least 60 seconds after disconnecting the battery cables before doing any further work (Refer to P.52B-5).

1. Disconnect the negative and positive battery cables from the battery terminals, and then remove the battery from the vehicle.

⚠ WARNING

Once disconnected, both electrodes of the front passenger's air bag module connector short automatically to prevent accidental deployment caused by static etc. Still, in consideration of the accidental deployment, store the air bag module on flat place with deployment surface facing up. Also, do not put anything on it.

2. Remove the air bag module from the vehicle (Refer to P.52B-334).

3. Use the deployment wires as follows.

<Except vehicles for Hong Kong, Singapore, Australia and New Zealand>

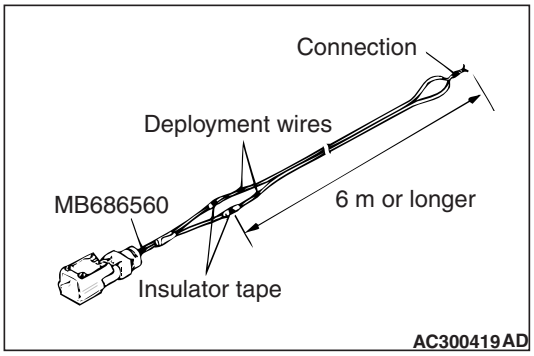

Connect deployment wires longer than 6 m to each special tool SRS air bag adapter harness (MB686560) and insulate the connections with insulator tape. Also, connect the deployment wires in the other ends to short, thereby preventing the passenger's air bag from accidental deployment caused by static etc.

<Vehicles for Hong Kong, Singapore, Australia and New Zealand>

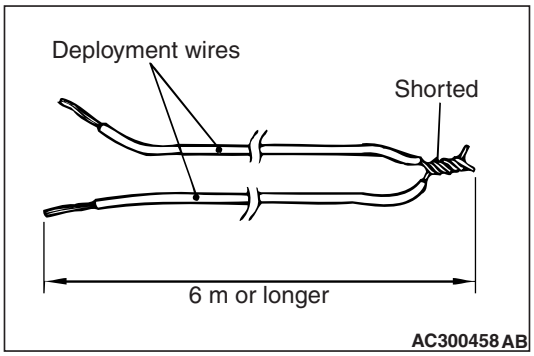

Prepare two wires longer than 6 meters for deployment and connect the terminals in one end to short-circuit. This is to prevent accidental deployment caused by static etc.

⚠ CAUTION

Never fail to do Step 4 in order to prevent accidental deployment caused by static.

4. Touch the vehicle's body with your bare hands to discharge static electricity.
5. Connect the deployment wires to the air bag as follows.

<Except vehicles for Hong Kong, Singapore, Australia and New Zealand>

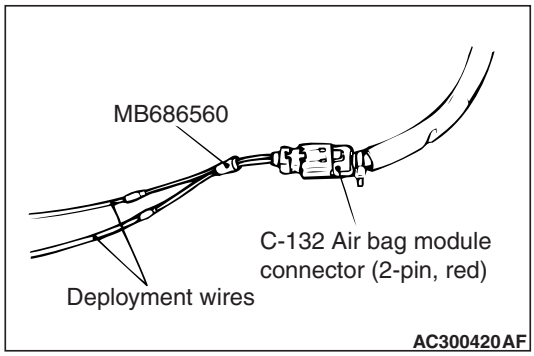

Connect the C-132 air bag module (front passenger's side) connector (2-pin, red) to special tool SRS air bag adapter harness (MB686560) and move the deployment wire out of the vehicle.

Main Index
Group TOC

<Vehicles for Hong Kong, Singapore, Australia and New Zealand>

⚠ CAUTION

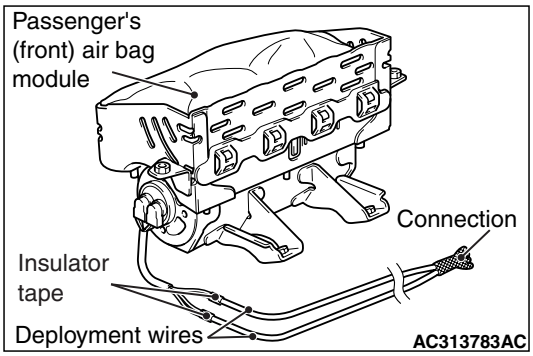

In case of the dual inflator type's air bag module, be sure to deploy the both two air bags at the same time. Because another air bag may be deployed suddenly when deploying the one air bag.

Using pliers, cut the passenger's air bag module connector from the harnesses. Connect the deployment wires to each harness that has been cut and insulate the connections with insulator tape.

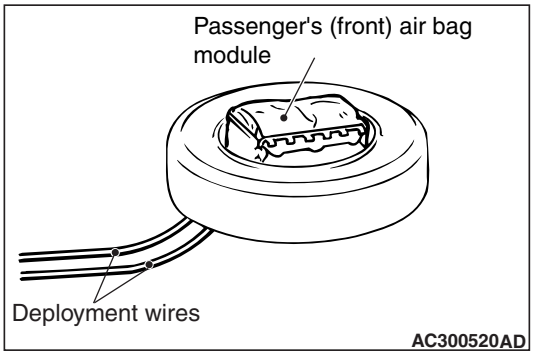

6. Pass the thick wire through the air bag module mounting hole, and then secure the air bag module to an old tyre with a wheel in it so that the pad on the module is facing upwards.

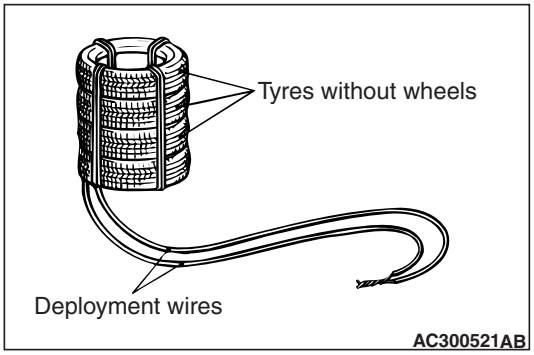

7. Place three old tyres without wheels on top of the tyre secured to the air bag module, and secure all tires together with ropes (four locations).

⚠ *WARNING*

- ***Before deployment, check carefully to be sure that no one is nearby.***
- ***The inflator will be quite hot immediately following the deployment, so wait at least 30 minutes to allow it to cool before attempting to handle it. Although not poisonous, do not inhale gas from air bag deployment. See Deployed Air Bag Module and Operated Seat Belt Pre-tensioner Disposal (Refer to P.52B-372) for post-deployment handling instructions.***
- ***If the air bag fails to deploy, do not go near the module. Contact your distributor.***

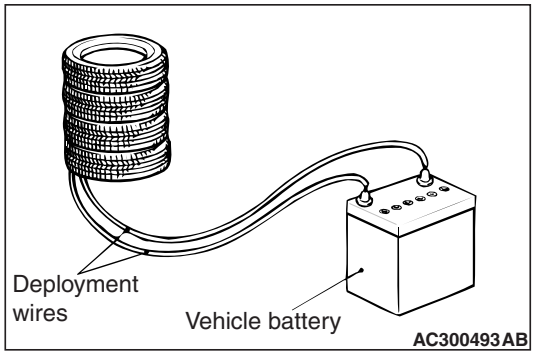

8. At a location as far away from the air bag module as possible, and from a shielded position, disconnect the two connected wires from each other, and connect them, to the two terminals of the battery (which has been removed from the vehicle) to deploy the air bag.
9. Discard the deployed air bag module as specified in Deployed Air Bag Module and Operated Seat Belt Pre-tensioner Disposal (Refer to P.52B-372).

Main Index
Group TOC

DEPLOYMENT OUTSIDE VEHICLE <SIDE-AIRBAG MODULE>

⚠ WARNING

- ***This should be carried out in a wide, flat area at least 6 m away from obstacles and other people.***
- ***Do not deploy outside if wind is high. Even in a soft wind, ignite to windward of the air bag modules.***

⚠ DANGER

Wait at least 60 seconds after disconnecting the battery cables before doing any further work (Refer to P.52B-5).

1. Disconnect the negative and positive battery cables from the battery terminals, and then remove the battery from the vehicle.

⚠ WARNING

Once disconnected, both electrodes of the side air bag module connector short automatically to prevent accidental deployment caused by static etc. Still, in consideration of the accidental deployment, store the air bag module on flat place with deployment surface facing up. Also, do not put anything on it.

2. Remove the front seat assembly with side-airbag module from the vehicle (Refer to P.52B-342).
3. Remove the side-airbag module from the front seat assembly incorporated in the side-airbag.

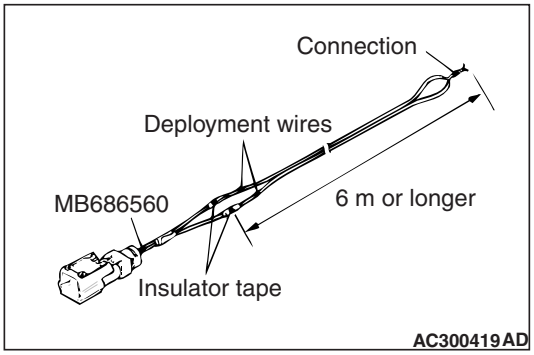

4. Connect deployment wires longer than 6 m to each special tool SRS air bag adapter harness (MB686560) and insulate the connections with insulator tape. Also, connect the deployment wires in the other ends to short, thereby preventing the side-airbag from accidental deployment caused by static etc.

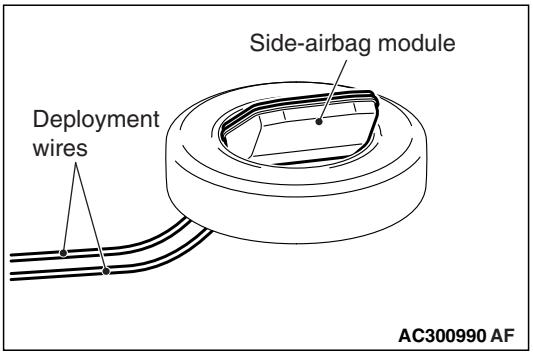

5. Pass the special tool SRS air bag adapter harness (MB686560) connected with deployment wires beneath an old tyre and wheel assembly, and connect it to the side-airbag module connector.

⚠ CAUTION

- **The adapter harness below the wheel should be loose. If it is too tight, the reaction when the air bag deploys could damage the adapter harness.**
- **During deployment, the connector of SRS air bag adapter harness (MB686560) must not be between the tyres.**

6. Connect the thick wire to the side-airbag module installation bolt with a used nut, and place the side-airbag module on an old tyre and wheel assembly so that its deployment side is facing upward.

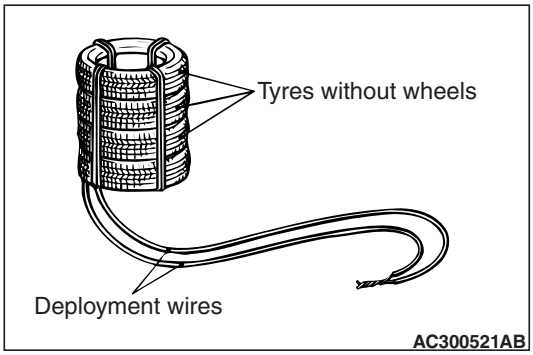

7. Place three old tyres without wheels on top of the tyre secured to the side-airbag module, and secure all tyres together with ropes (four locations).

Main Index
Group TOC

⚠ WARNING

- ***Before deployment, check carefully to be sure that no one is nearby.***
- ***The inflator will be quite hot immediately following the deployment, so wait at least 30 minutes to allow it to cool before attempting to handle it. Although not poisonous, do not inhale gas from air bag deployment. See Deployed Air Bag Module and Operated Seat Belt Pre-tensioner Disposal (Refer to P.52B-372) for post-deployment handling instructions.***
- ***If the air bag fails to deploy, do not go near the module. Contact your distributor.***

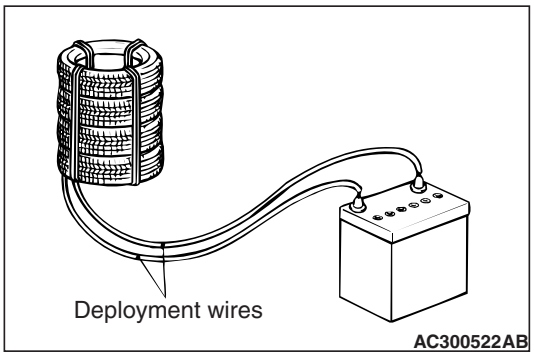

8. At a location as far away from the side-airbag module as possible, and from a shielded position, disconnect the two connected wires from each other, and connect them to the two terminals of the battery (which has been removed from the vehicle) to deploy the air bag.
9. Discard the deployed air bag module as specified in Deployed Air Bag Module and Operated Seat Belt Pre-tensioner Disposal (Refer to P.52B-372).

DEPLOYMENT OUTSIDE VEHICLE <CURTAIN AIR BAG MODULE>

⚠ WARNING

- ***This should be carried out in a wide, flat area at least 6 m away from obstacles and other people.***
- ***Do not deploy outside if wind is high. Even in a soft wind, ignite to windward of the air bag modules.***

⚠ DANGER

Wait at least 60 seconds after disconnecting the battery cables before doing any further work (Refer to P.52B-5).

1. Disconnect the negative and positive battery cables from the battery terminals, and then remove the battery from the vehicle.

⚠ WARNING

Once disconnected, both electrodes of the curtain air bag module connector short automatically to prevent accidental deployment caused by static etc. Still, in consideration of the accidental deployment, store the air bag module on flat place with deployment surface facing up. Also, do not put anything on it.

2. Remove the headlining (Refer to GROUP 52A, Headlining P.52A-17).

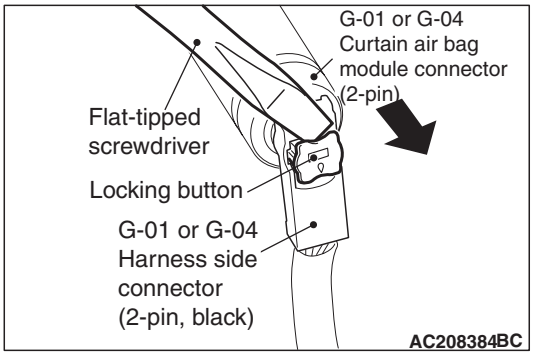

3. Use a flat-tipped screwdriver to unlock the locking button of the harness-side connector (2-pin, black) by with drawing it toward you in two stages.
4. Disconnect the G-01 or G-04 harness side connector.

Main Index
Group TOC

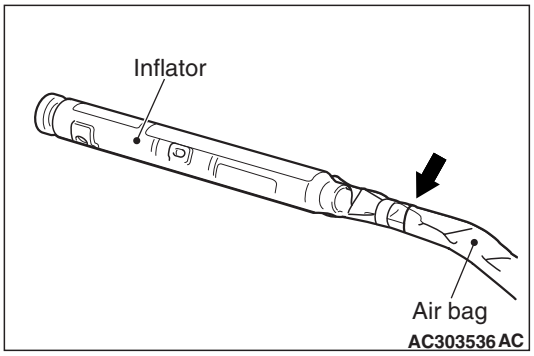

5. Cut the inflator and the air bag with a cutter.

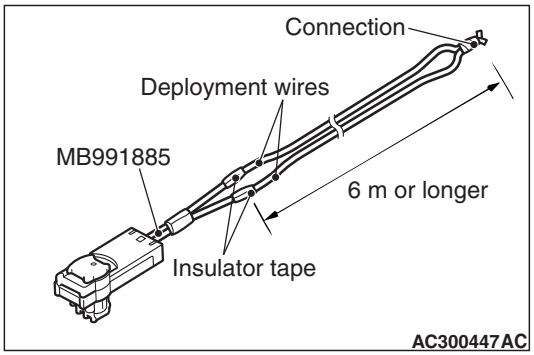

6. Connect deployment wires longer than 6 m to each special tool SRS air bag adapter harness (MB991885) and insulate the connections with insulator tape. Also, connect the deployment wires in the other ends to short, thereby preventing the passenger's air bag from accidental deployment caused by static etc.

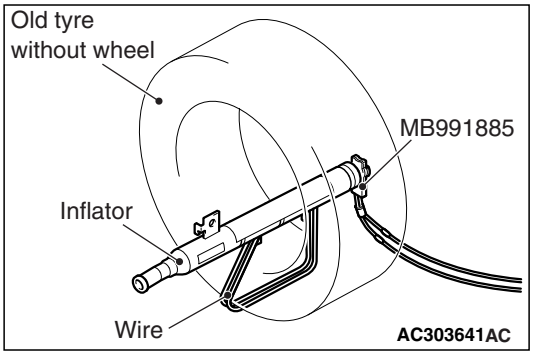

7. Feed a thick wire through the bracket of the inflator, and connect it to an old tyre with a wheel.
8. Connect the special tool SRS air bag adapter harness (MB991885) to the inflator connector.

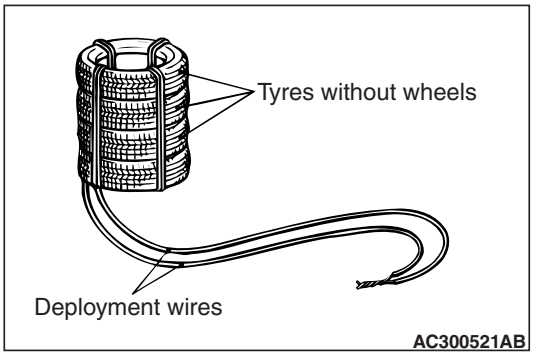

9. Place three old tyres without wheels on top of the tyre secured to the inflator, and secure all tyres together with ropes (four locations).

⚠ WARNING

- ***Before deployment, check carefully to be sure that no one is nearby.***
- ***The inflator will be quite hot immediately following the deployment, so wait at least 30 minutes to allow it to cool before attempting to handle it. Although not poisonous, do not inhale gas from air bag deployment. See Deployed Air Bag Module and Operated Seat Belt Pre-tensioner Disposal (Refer to P.52B-372) for post-deployment handling instructions.***
- ***If the air bag fails to deploy, do not go near the module. Contact your distributor.***

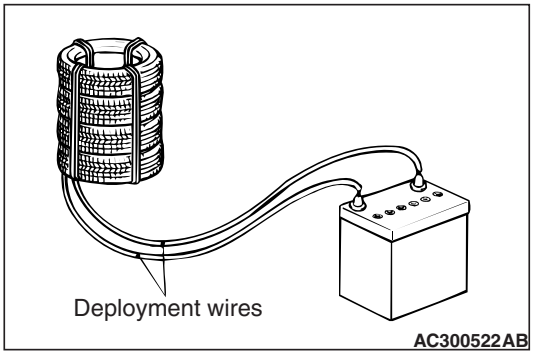

10. At a location as far away from the inflator as possible, and from a shielded position, disconnect the two connected wires from each other, and connect them to the two terminals of the battery (which has been removed from the vehicle) to deploy the inflator.
11. Discard the deployed inflator as specified in Deployed Air Bag Module and Operated Seat Belt Pre-tensioner Disposal (Refer to P.52B-372).

Main Index
Group TOC

DEPLOYMENT OUTSIDE THE VEHICLE <SEAT BELT PRE-TENSIONER>

⚠ WARNING

- ***This should be carried out in a wide, flat area at least 6 m away from obstacles and other people.***
- ***Do not deploy outside if wind is high. Even in a soft wind, ignite to windward of the air bag modules.***

⚠ DANGER

Wait at least 60 seconds after disconnecting the battery cables before doing any further work (Refer to P.52B-5).

1. Disconnect the negative and positive battery cables from the battery terminals, and then remove the battery from the vehicle.

⚠ WARNING

Store the operated seat belt pre-tensioner the correct way up with its operation surface upper most on a flat surface. Do not place anything on top of them.

2. Remove the seat belt pre-tensioner from the vehicle (Refer to P.52B-350).

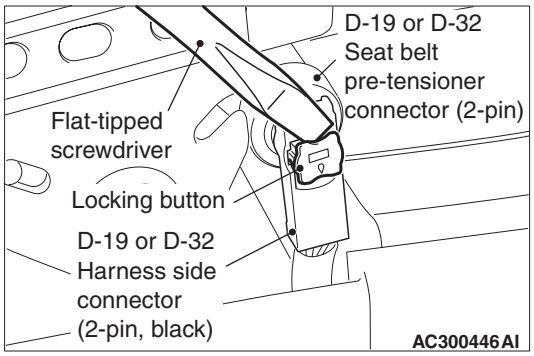

3. Use a flat-tipped screwdriver to unlock the locking button of the harness-side connector (2-pin, black) by with drawing it toward you in two stages.
4. Disconnect the D-19 or D-32 harness side connector.

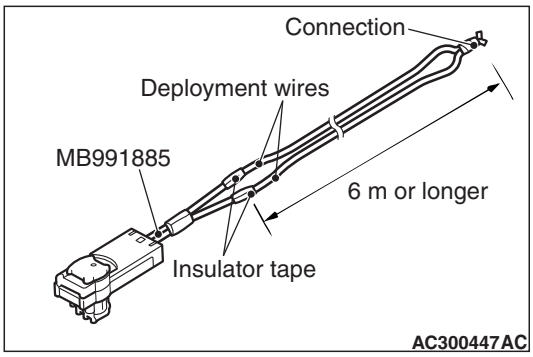

5. Connect deployment wires longer than 6 m to each special tool SRS air bag adapter harness (MB991885) and insulate the connections with insulator tape. Also, connect the deployment wires in the other ends to short, thereby preventing the seat belt pre-tensioner from accidental deployment caused by static etc.
6. Connect the special tool SRS air bag adapter harness (MB991885), which the deployment wires is attached to, to the seat belt pre-tensioner connector.

⚠ CAUTION

The adapter harness below the wheel should be loose. If it is too tight, the reaction when the seat belt pre-tensioner operates could damage the adapter harness.

7. Pass the thick wires through the hole on the seat belt pre-tensioner bracket and secure them to the front (raised part) of the wheel on two place.

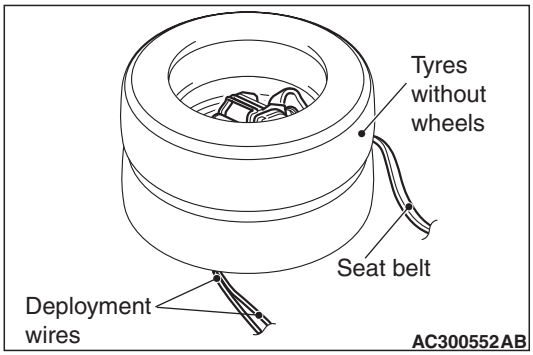

8. Pull the seat belt out the outside of the tyre, and then place one tyre without a wheel inside on top of the existing tyre.

Main Index
Group TOC

⚠ WARNING

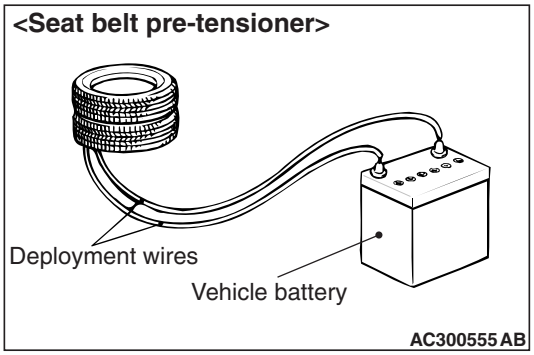

Before operation, check carefully to be sure that no one is nearby.

- ***The inflator will be quite hot immediately following the operation, so wait at least 30 minutes to allow it to cool before attempting to handle it. Although not poisonous, do not inhale gas from seat belt pre-tensioner operation. See Deployed Air Bag Module and Operated Seat Belt pre-tensioner Disposal (Refer to P.52B-372) for post-operation handling instructions.***
- ***If the seat belt pre-tensioner fails to operate, do not go near the seat belt pre-tensioner. Contact your distributor.***

9. At a location as far away from the seat belt pre-tensioner as possible, and from a shielded position, disconnect the two connected wires from each other, and connect them to the two terminals of the battery (which has been removed from the vehicle) to operated seat belt pre-tensioner.
10. Discard the operated seat belt pre-tensioner as specified in Deployed Air Bag Module and Seat Belt pre-tensioner Disposal (Refer to P.52B-372).

DEPLOYED AIR BAG MODULE AND OPERATED SEAT BELT PRE-TENSIONER DISPOSAL

After deployment and operation, the air bag module and seat belt pre-tensioner should be disposed of in the same manner as any other scrap parts, adhering to local laws and/or legislation. Observe the following precautions during air bag or seat belt pre-tensioner disposal:

1. The inflator will be quite hot immediately following deployment, so wait at least 30 minutes to allow it cool before attempting to handle it.
2. Do not put water or oil on the air bag after deployment or on the seat belt pre-tensioner after operation.

⚠ WARNING

If after following these precautions, any material does get into the eyes or on the skin, immediately rinse the affected area with a large amount of clean water. If any irritation develops, seek medical attention.

3. There may be material on the deployed air bag module or the operated seat belt pre-tensioner, that could irritate the eye and/or skin. Wear gloves and safety glasses when handling a deployed air bag module or the operated seat belt pre-tensioner.

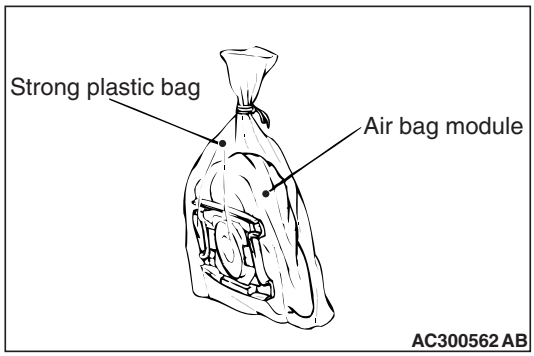

4. Tightly seal the air bag module and seat belt pre-tensioner in a strong plastic bag for disposal.
5. Be sure to always wash your hands after completing this operation.