GROUP 52B

SUPPLEMENTAL RESTRAINT SYSTEM (SRS)

CONTENTS

FASTENER TIGHTENING SPECIFICATIONS 52B-3

GENERAL INFORMATION 52B-3

SERVICE PRECAUTIONS. 52B-24

SRS AIR BAG DIAGNOSIS. 52B-28

- INTRODUCTION TO DIAGNOSIS 52B-28
- TROUBLESHOOTING STRATEGY 52B-28
- DIAGNOSTIC FUNCTION 52B-28
- SRS WARNING LIGHT CHECK. 52B-30
- PASSENGER'S SEAT BELT WARNING LIGHT CHECK 52B-30
- PASSENGER'S AIR BAG OFF INDICATOR LIGHT CHECK 52B-31
- CHECK CHART FOR DIAGNOSIS CODES 52B-32
- DIAGNOSTIC TROUBLE CODE PROCEDURES <SRS-ECU> 52B-36
- DIAGNOSTIC TROUBLE CODE CHART <Occupant classification-ECU>. 52B-346
- DIAGNOSTIC TROUBLE CODE PROCEDURES <OCCUPANT CLASSIFICATION-ECU>. . . 52B-348
- TROUBLE SYMPTOM CHART 52B-413
- SYMPTOM PROCEDURES 52B-414
- DATA LIST REFERENCE TABLE. 52B-423
- ACTUATOR TEST REFERENCE TABLE . . 52B-425
- FAIL-SAFE FUNCTION REFERENCE TABLE 52B-425
- ACCURACY CHECK OF OCCUPANT CLASSIFICATION SENSOR. 52B-425

Continued on next page

⚠ WARNING

Battery posts, terminals and related accessories contain lead and lead compounds. WASH HANDS AFTER HANDLING.

⚠ WARNING

- ***Carefully read and observe the information in the SRS SERVICE PRECAUTIONS prior to any service.***
- ***For information concerning diagnosis or maintenance, always observe the procedures in the SRS Diagnosis or the SRS Maintenance sections, respectively.***
- ***If any SRS components are removed or replaced in connection with any service procedures, be sure to follow the procedures in the INDIVIDUAL COMPONENT SERVICE section for the comportments involved.***
- ***If you have any questions about the SRS, please contact the MMNA Tech Line.***

SPECIAL TOOLS 52B-426

TEST EQUIPMENT 52B-427

POST-COLLISION DIAGNOSIS 52B-428

INDIVIDUAL COMPONENT SERVICE 52B-434

ON-VEHICLE SERVICE. 52B-435
ACCURACY CHECK OF OCCUPANT CLASSIFICATION SENSOR 52B-435

FRONT IMPACT SENSORS 52B-437
REMOVAL AND INSTALLATION 52B-437
INSPECTION 52B-439

SRS CONTROL UNIT (SRS-ECU). . . 52B-440
REMOVAL AND INSTALLATION 52B-440
INSPECTION 52B-442

AIR BAG MODULES AND CLOCK SPRING. 52B-443
REMOVAL AND INSTALLATION 52B-443
INSPECTION. 52B-451

SIDE IMPACT SENSOR 52B-454
REMOVAL AND INSTALLATION 52B-454
INSPECTION. 52B-456

CURTAIN AIR BAG MODULES 52B-457
REMOVAL AND INSTALLATION 52B-457
INSPECTION. 52B-460

SEAT BELTS WITH PRE-TENSIONER 52B-461
REMOVAL AND INSTALLATION 52B-461
INSPECTION. 52B-465

AIR BAG MODULE AND SEAT BELT PRE-TENSIONER DISPOSAL PROCEDURES 52B-465

FASTENER TIGHTENING SPECIFICATIONS

M1524004900523

Item	Specification
Air bag module(s) and clock spring	
Paddle shift mounting bolt	7.0 ±3.0 N· m (62 ±26 in-lb)
Steering wheel nut	44 ±11 N· m (32 ±8 ft-lb)
Passenger's (front) air bag module mounting bolt	5.0 ±1.0 N· m (44 ±8 in-lb)
Torx screw	9.5 ±2.5 N· m (84 ±22 in-lb)
Curtain air bag module	
Curtain air bag module mounting bolt	7.0 ±3.0 N· m (62 ±26 in-lb)
Front impact sensor	
Front impact sensor bolt	12 ±1 N· m (106 ±8 in-lb)
Seat belts with pre-tensioner	
Lap pre-tensioner mounting bolt	43 ±8 N· m (32 ±5 ft-lb)
Seat belt lower anchor bolt	43 ±8 N· m (32 ±5 ft-lb)
Seat belt shoulder anchor bolt	43 ±8 N· m (32 ±5 ft-lb)
Seat belt with pre-tensioner mounting bolt	43 ±8 N· m (32 ±5 ft-lb)
Seat belt with pre-tensioner mounting screw	5.0 ±1.0 N· m (44 ±8 in-lb)
Side impact sensor	
Side impact sensor nut (front)	12 ±1 N· m (106 ±8 in-lb)
Side impact sensor bolt (rear)	9.0 ±1.0 N· m (80 ±8 in-lb)
SRS control unit (SRS-ECU)	
SRS-ECU bolt	9.0 ±1.0 N· m (80 ±8 in-lb)

GENERAL INFORMATION

M1524000102189

⚠ ***DANGER***

The SRS-ECU adopts the rollover specification that the curtain airbag and seat belt pre-tensioner operate at the occurrence of rollover. Therefore, do not tilt the vehicle to the right and left with the IG ON or tilt the SRS-ECU to the right and left with the IG ON and the harness installed.

⚠ ***WARNING***

Improper service could result in serious injury of the service personnel or the passenger.

The SRS is designed to supplement the front seat belts. It reduces injury to the driver(s) and the front passenger(s) by deploying air bag(s) in case of a frontal collision. In addition, the side-airbag and curtain air bag inflate upon a side collision to reduce the risk of passenger injuries.
The SRS front air bags from an advanced air bag system together with sensors at the vehicle and sensors attached to front seats.

Side-airbag systems in the front seats are activated when side impacts exceed a criteria to protect the occupants' upper bodies.

The curtain airbag system operates together with the side-airbag to protect the heads of passengers in the front and second seats.

The seat belts with pre-tensioner work simultaneously with the SRS. The seat belt incorporating the pre-tensioner automatically winds the seat belt upon front impact to reduce forward shifting of the driver's and passenger's. The seat belt use status is used to control the activation and deactivation of the pre-tensioner. In addition to the pre-tensioner for the shoulder side, the lap pre-tensioner has been installed on the outer seat belt lower anchor side of the driver's seat in order to improve the restraining performance around the waist as well as the chest area.

The SRS consists of air bag modules, SRS air bag control unit (SRS-ECU), front impact sensors, side impact sensors, SRS warning light, passenger's air bag OFF indicator light, passenger's seat belt warning light, clock spring, seat belt pre-tensioner, seat belt switch, seat slide sensor, weight sensor and occupant classification-ECU. Air bag modules are located in the center of the steering wheel and above the glove box. Side-airbags are located inside the front seatback assemblies. The curtain air bag module consists of an air bag, an inflator, and the fixing gear relating to those parts, and is installed in the roof side sections (from the driver's and the passenger's front pillars to the rear pillars). Each air bag consists of a folded air bag and an inflator unit. The SRS-ECU placed on the forefront of the floor monitors the system and has a front air bag safing G-sensor, front air bag analog G-sensor and a side-airbag safing G-sensor. The front impact sensor is assembled in the front end upper bar to monitor impact in case of front impact. The side impact sensors inside the center pillars and the rear quarter panel monitor the shock incurred by the sides of the vehicle. The SRS warning light on the combination meter indicates the operational status of the SRS. The clock spring is installed in the steering column. The seat belt pre-tensioner is built into the driver's and passenger's front seat belt retractor. The seat slide sensor is installed at the seat adjuster section of the driver seat in order to detect the driver seat slide position. The weight sensor is installed underneath a rail of the passenger seat to detect the load on the seat. The passenger's air bag OFF indicator light is installed to the lower left of the center panel, and illuminates when the passenger seat airbag is inactive. The passenger's seat belt warning light is installed to the lower right of the center panel, and illuminates when the passenger is not wearing the seat belt. The seat belt switch detects whether the seat belt is used.
Only authorized service personnel should do work on or around the SRS components. Those service personnel should read this manual carefully before starting any such work.

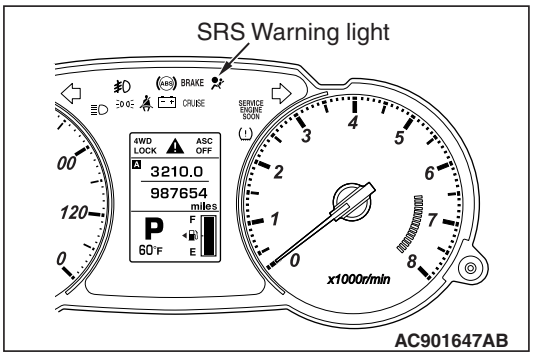

ON-BOARD DIAGNOSTIC/SRS WARNING LIGHT FUNCTION

The SRS-ECU monitors the SRS system and stores data concerning any detected faults in the system. When the ignition switch is in "ON" position, the SRS warning light, passenger's air bag OFF indicator light and passenger's seat belt warning light should illuminate for about seven seconds and then turn "OFF." That indicates that the SRS system is in operational order. If the SRS warning light does any of the following, the immediate inspection by an authorized dealer is needed:

1. The SRS warning light does not illuminate as described above.
2. The SRS warning light stays on for more than seven seconds.
3. The SRS warning light illuminates while driving.

If a vehicle's SRS warning light is in any of these three conditions, the SRS system must be inspected, diagnosed and serviced in accordance with this manual.

CONSTRUCTION DIAGRAM

<Except colour liquid crystal display>

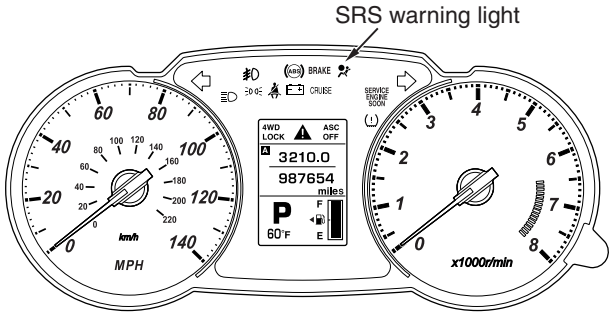

<Colour liquid crystal display>

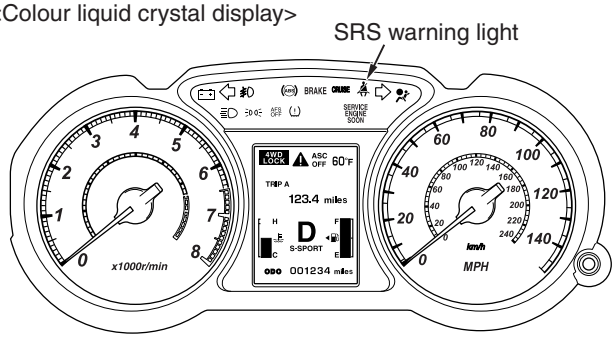

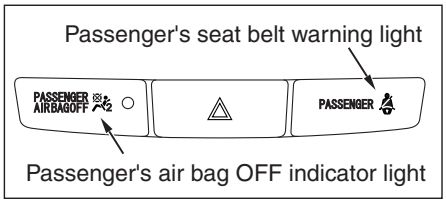

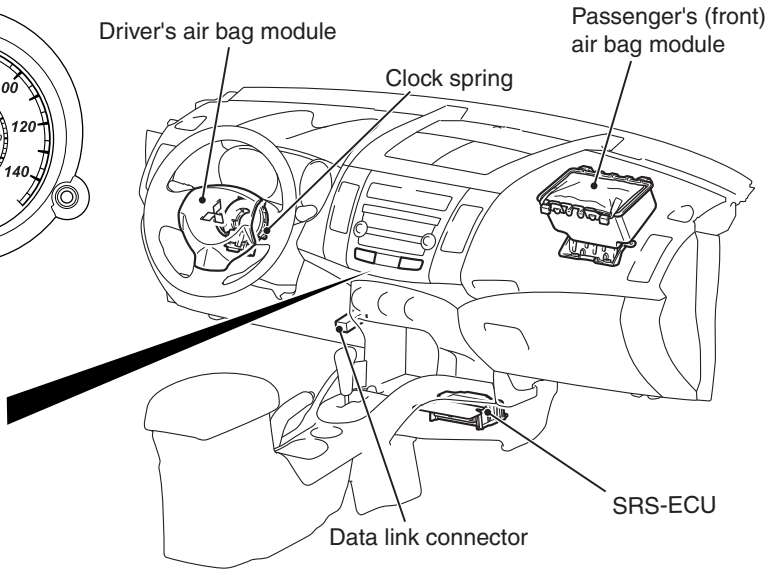

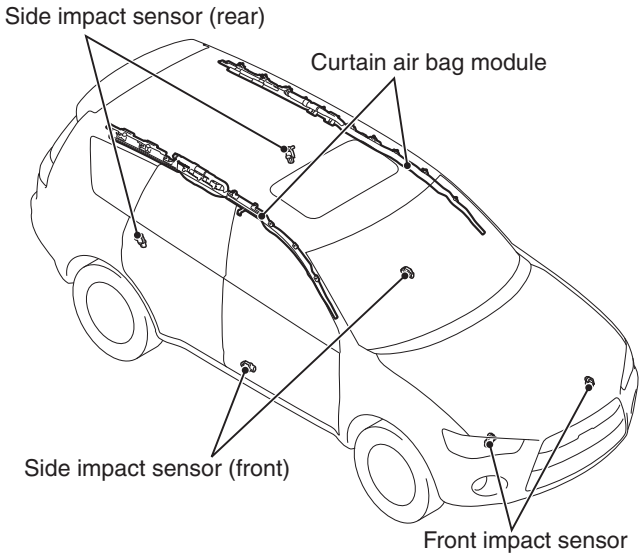

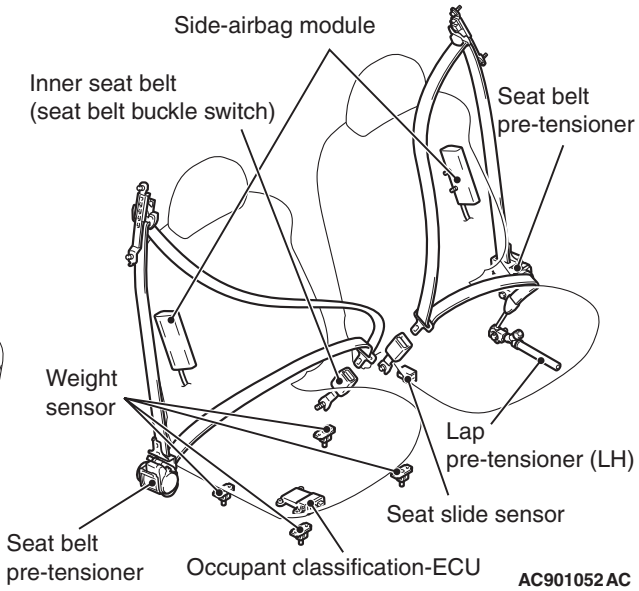

NOTE: This construction diagram shows the general view of the SRS components. For details, refer to "Schematic (P.52B-9), "Configuration Diagrams (P.52B-12), " and "Circuit Diagram (P.52B-13)".

TSB Revision

WARNING/CAUTION LABELS

A number of caution labels related to the SRS are found in the vehicle, as shown in the following illustrations. Follow label instructions when servicing SRS. The label I is not to be removed except by owner. If the other labels are dirty or damaged, replace them.

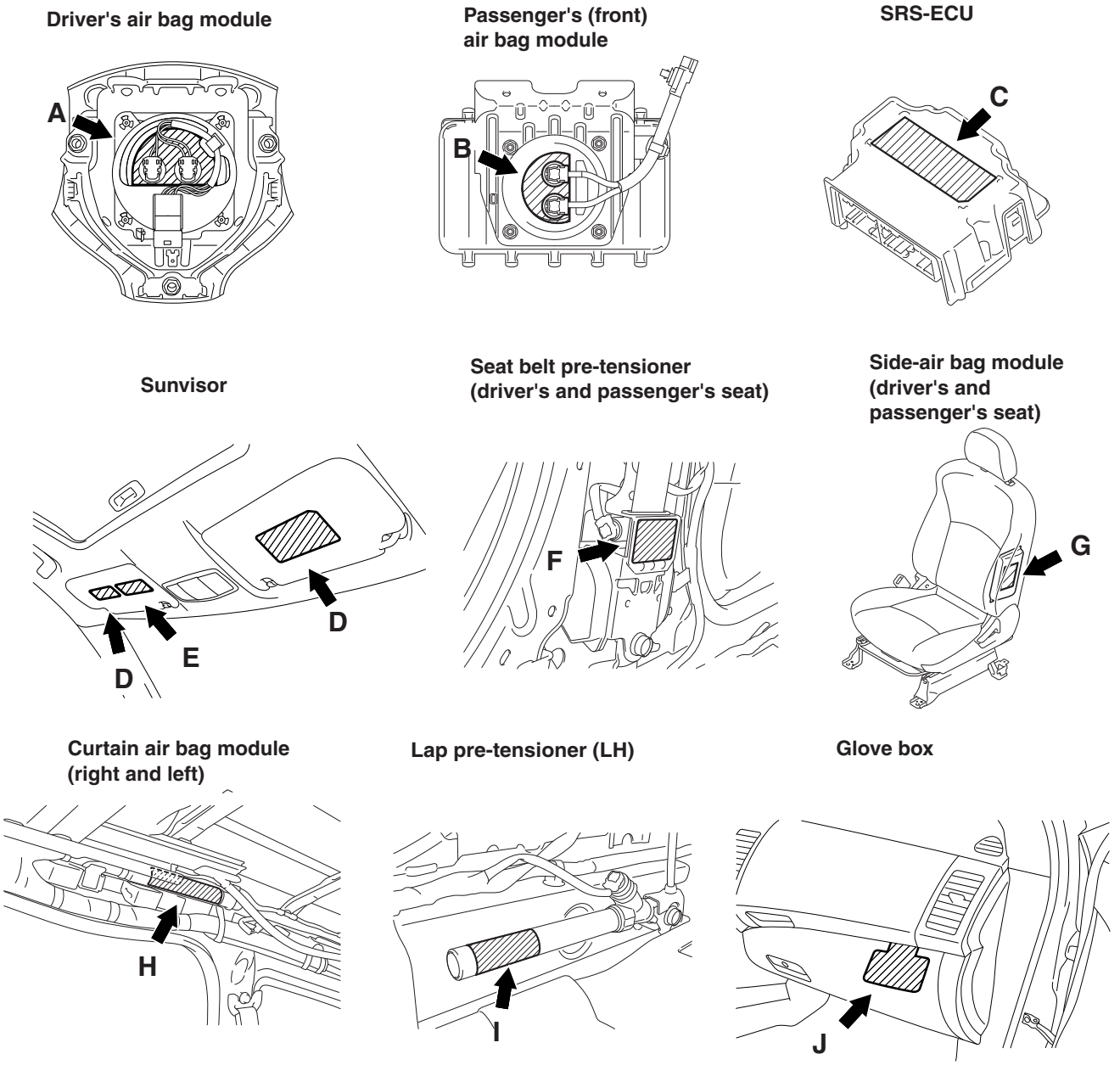

Label contents	
A	DANGER FLAMMABLE EXPLOSIVE DO NOT DISASSEMBLE; HEAT; INCINERATE; APPLY ELECTRICITY; OR STORE AT HIGH TEMPERATURE (93° C or HIGHER). REFER TO WORKSHOP MANUAL FOR DETAILS.
B	WARNING FLAMMABLE/EXPLOSIVE SRS AIR BAG MODULE TO AVOID SERIOUS INJURY: • DO NOT REPAIR. DISASSEMBLE OR TAMPER. • AVOID CONTACT WITH FLAME OR ELECTRICITY. • DO NO DIAGNOSIS/USE NO TEST EQPT OR PROBES. • STORE BELOW 200° F (93° C). • BEFORE DOING ANY WORK INVOLVING MODULE, READ SERVICE MANUAL FOR IMPORTANT FURTHER DATA.
C	CAUTION: DO NOT DISASSEMBLE OR DROP. IF DEFECT REFER TO SERVICE MANUAL.
D <EXCEPT VEHICLES FOR CANADA> 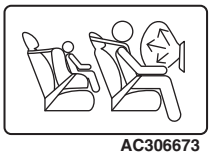 AC306673	WARNING EVEN WITH ADVANCED AIR BAGS • Children can be killed or seriously injured by the air bag • The back seat is the safest place for children • Never put a rear-facing child seat in the front • Always use seat belts and child restraints • See owner's manual for more information about air bags
D <VEHICLES FOR CANADA> V0037AA	WARNING DEATH or SERIOUS INJURY can occur • Children 12 and under can be killed by the air bag. • The BACK SEAT is the SAFEST place for children. • NEVER put a rear-facing child seat in the front. • Sit as far back as possible from the air bag. • ALWAYS use SEAT BELTS and CHILD RESTRAINS.
E AC107269 AC107270	WARNING: HIGHER ROLLOVER RISK Avoid Abrupt Maneuvers and Excessive Speed. Always Buckle up. See Owner's Manual For Further Information.

Label contents	
F, I	DANGER: BELT PRETENSIONER • DO NOT DISASSEMBLE OR IMPACT • REFER TO SERVICE MANUAL FOR INSTRUCTIONS, HANDLING, STORAGE AND DISPOSAL PROCEDURES
G	WARNING SRS AIR BAG MODULE FLAMMABLE/EXPLOSIVE TO AVOID SERIOUS INJURY: • DO NOT REPAIR, DISASSEMBLE OR TAMPER. • AVOID CONTACT WITH FLAME OR ELECTRICITY. • DO NO DIAGNOSIS/USE NO TEST EQPT OR PROBES. • STORE BELOW 200° F (93° C). • BEFORE DOING ANY WORK INVOLVING MODULE, READ SERVICE MANUAL FOR IMPORTANT FURTHER DATA.
H	DANGER FLAMMABLE EXPLOSIVE SRS AIR BAG MODULE • Do not disassemble or shock. • Do not heat or incinerate. • Do not contact with electricity or tester probes. • Do not test or diagnose. • Do not store in more than 200° F (93° C). • Store the air bag cover is top. • For information on handing, replacement, and disposal methods, refer to the service manual.
J <EXCEPT VEHICLES FOR CANADA>	This Vehicle is Equipped with Advanced Air Bags Even with Advanced Air Bags Children can be killed or seriously injured by the air bag. The back seat is the safest place for children. Never put a rear-facing child seat in the front. Always use seat belts and child restraints. See owner's manual for more information about air bags. Not to be removed except by owner.
J <VEHICLES FOR CANADA>	WARNING MISE EN GARDE Children Can Be KILLED or INJURED by Passenger Air Bag The back seat is the safest place for children 12 and under. Make sure all children use seat belts or child seats. Not to be removed except by owner.

SCHEMATIC

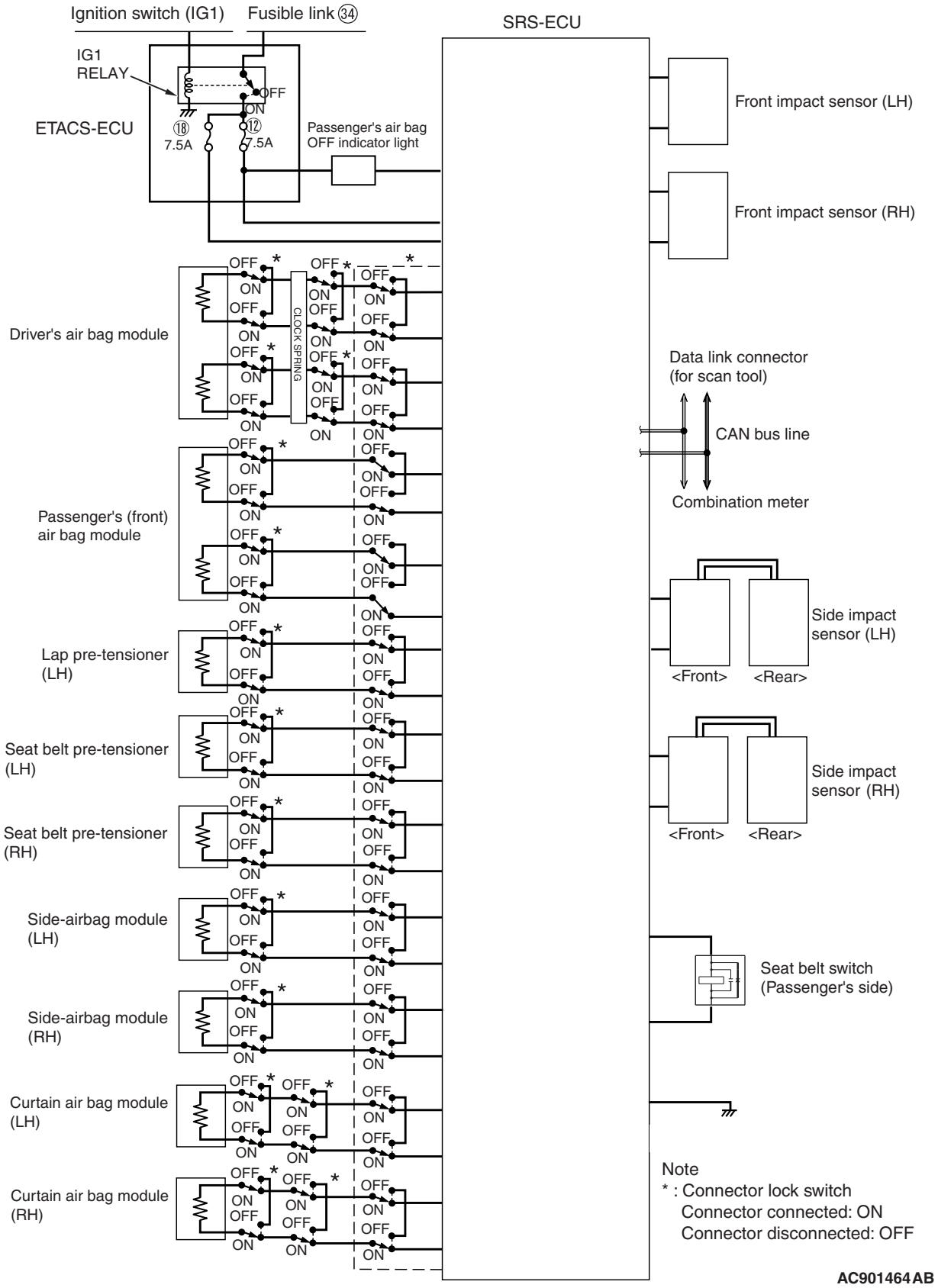
Ignition switch (IG1)
Fusible link ㉞
SRS-ECU
IG1 RELAY
ETACS-ECU
⑱ 7.5A
⑫ 7.5A
Passenger's air bag OFF indicator light
Front impact sensor (LH)
Front impact sensor (RH)
Driver's air bag module
CLOCK SPRING
Data link connector (for scan tool)
CAN bus line
Combination meter
Passenger's (front) air bag module
Side impact sensor (LH)
<Front>
<Rear>
Lap pre-tensioner (LH)
Seat belt pre-tensioner (LH)
Side impact sensor (RH)
Seat belt pre-tensioner (RH)
Side-airbag module (LH)
Seat belt switch (Passenger's side)
Side-airbag module (RH)
Curtain air bag module (LH)
Curtain air bag module (RH)
Note
* : Connector lock switch
Connector connected: ON
Connector disconnected: OFF
AC901464AB

SRS AIR BAG SPECIAL CONNECTOR

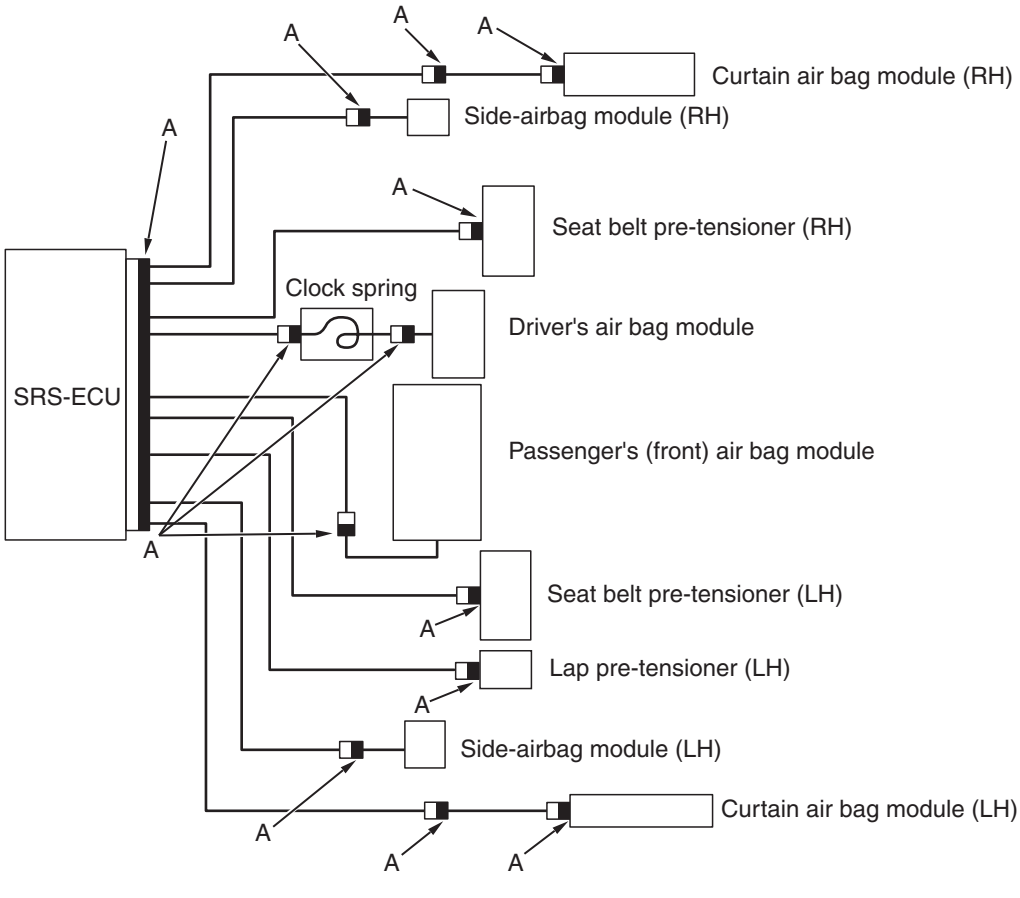

To enhance the system reliability, a connector short circuiting mechanism is integrated in the SRS-ECU connector, air bag module connectors, clock spring connector, pre-tensioner connectors, and intermediate connector between curtain air bag module and SRS-ECU (black connector "A" shown in the figure).

SQUIB CIRCUIT CONNECTOR LOCK SWITCH

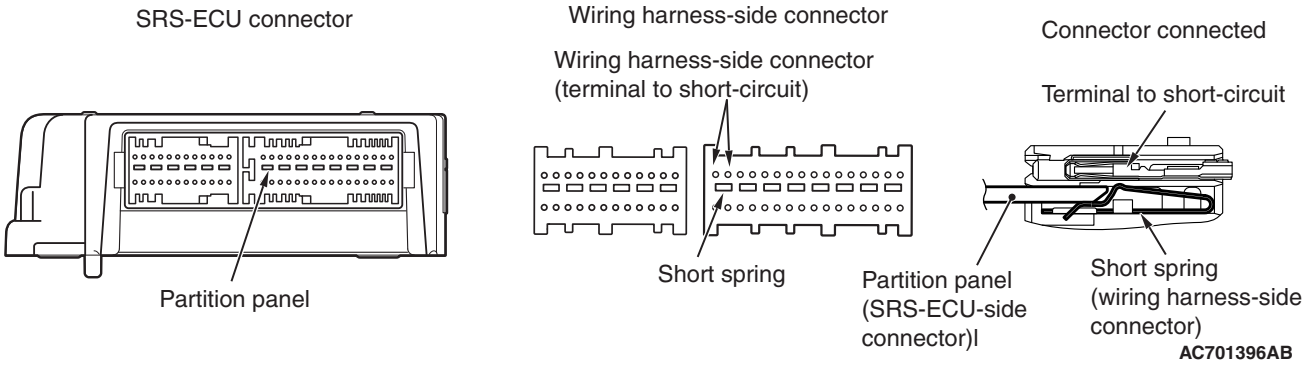

This mechanism prevents the improper deployment of air bag module because of the current application to the squib due to the static electricity when connectors between SRS-ECU and air bag modules (squibs) are disconnected. When the connector is disconnected, the short spring short circuits the power supply side terminal and ground side terminal of squibs, and prevents the static electricity from generating the potential difference. This connector mechanism is adopted for the following connectors.

- SRS-ECU connector
- Connector between the clock spring and body-side wiring harness
- Each air bag module connector
- Each pre-tensioner connector
- Intermediate connector between curtain air bag module and SRS-ECU

CONFIGURATION DIAGRAMS

DASH PANEL

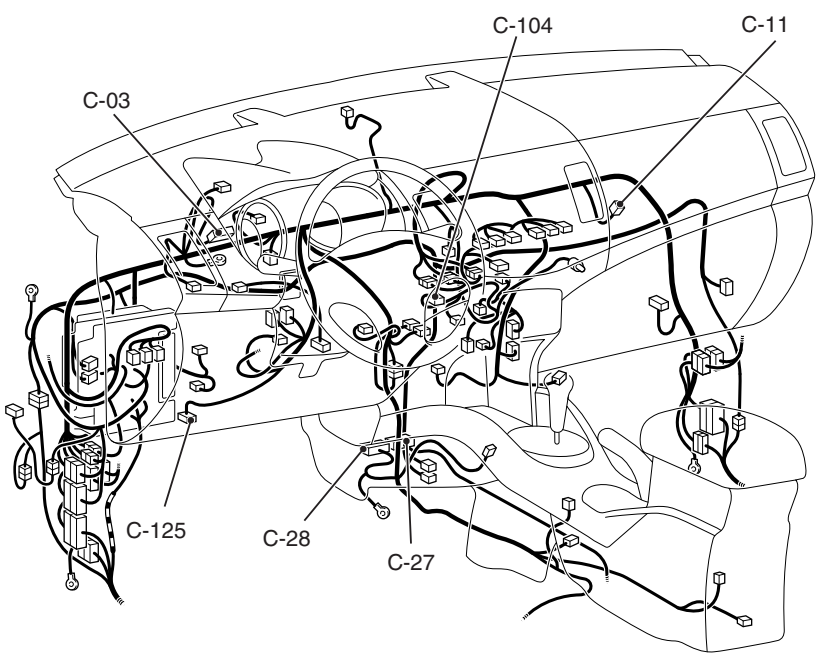

STEERING COLUMN

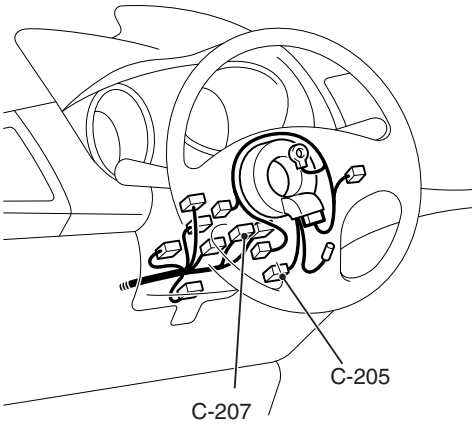

ENGINE COMPARTMENT

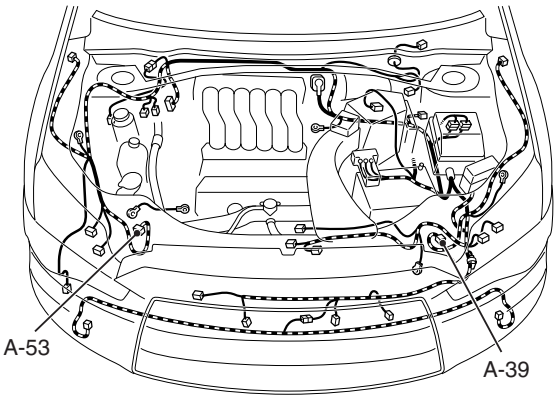

FLOOR AND ROOF

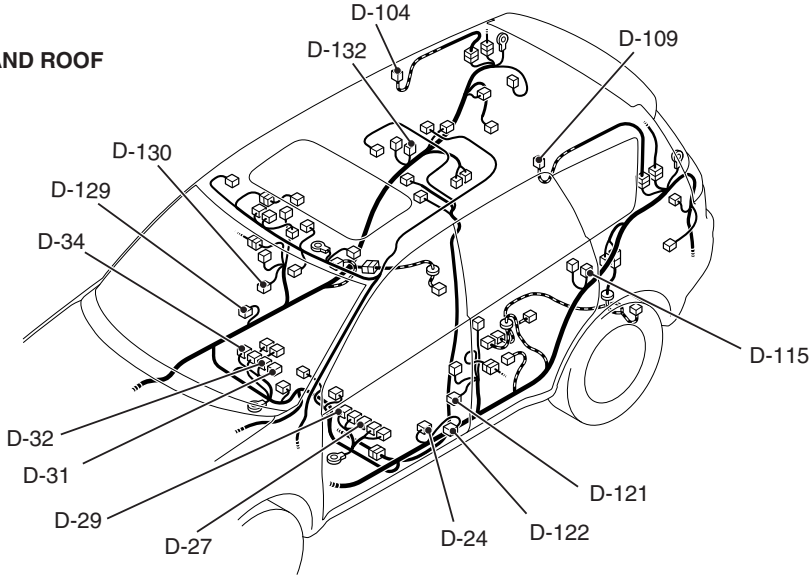

AC901147 AB

A-39 (Y)	Front impact sensor (LH)	**C-11 (Y)**	Passenger's (Front) air bag module
A-53 (Y)	Front impact sensor (RH)	**C-27 (Y)**	SRS-ECU
C-03	Combination meter	**C-28 (Y)**	SRS-ECU

TSB Revision

C-104 (Y)	Center panel unit
C-125 (B)	Date link connector
C-205 (Y)	Driver's air bag module
C-207 (Y)	Clock spring
D-24 (B)	Lap pre-tensioner
D-27 (GR)	Seat slide sensor
D-29 (Y)	Side-airbag module (LH)
D-31 (Y)	Side-airbag module (RH)
D-32 (B)	Seat belt buckle switch (Passenger's side)
D-34	Occupant classification-ECU
D-104 (B)	Curtain air bag module (RH)
D-109 (B)	Curtain air bag module (LH)
D-115 (Y)	Side impact sensor (Rear: LH)
D-121 (B)	Seat belt pre-tensioner (LH)
D-122 (Y)	Side impact sensor (Front: LH)
D-129 (Y)	Side impact sensor (Front: RH)
D-130 (B)	Seat belt pre-tensioner (RH)
D-132 (Y)	Side impact sensor (Rear: RH)

CIRCUIT DIAGRAM

⚠ *WARNING*

- ***Do not repair, splice, or modify the SRS wiring (except for specific repairs to the instrument panel wiring harness and the floor wiring harness shown on P.52B-24): replace the wiring if necessary, after reading and following all precautions and procedures in this manual.***
- ***Do not use an analog ohmmeter to check the SRS wiring or components; use only the special tools (refer to P.52B-426) and a digital multi-meter (refer to P.52B-427).***

⚠ CAUTION

Improper services cause the system to be inoperative. Do not disassemble or tamper with the SRS components to prevent the serious injury.

1

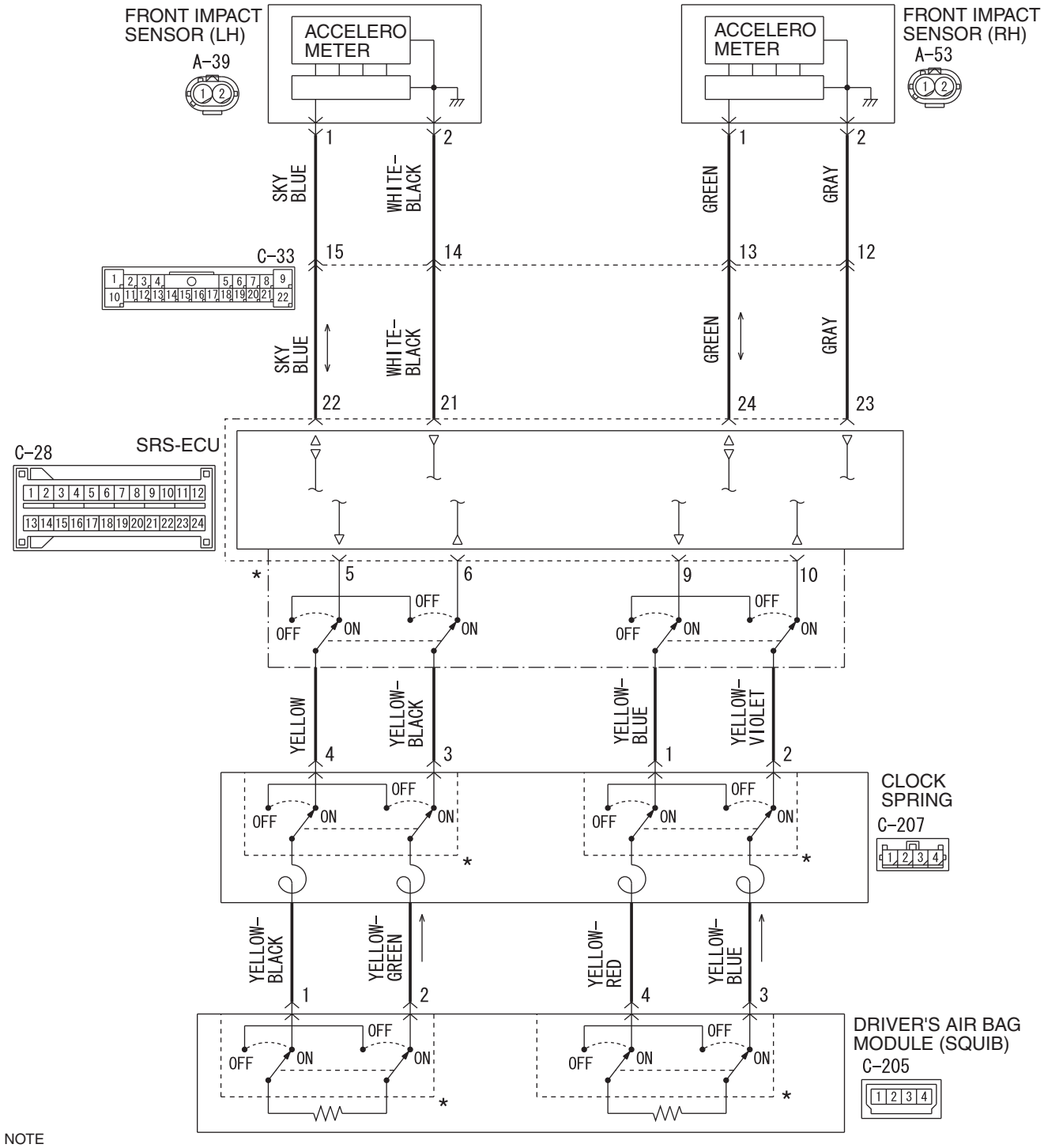

NOTE
*: CONNECTOR LOCK SWITCH
(CONNECTOR CONNECTED: ON
CONNECTOR DISCONNECTED: OFF)

AC704175 AB

2

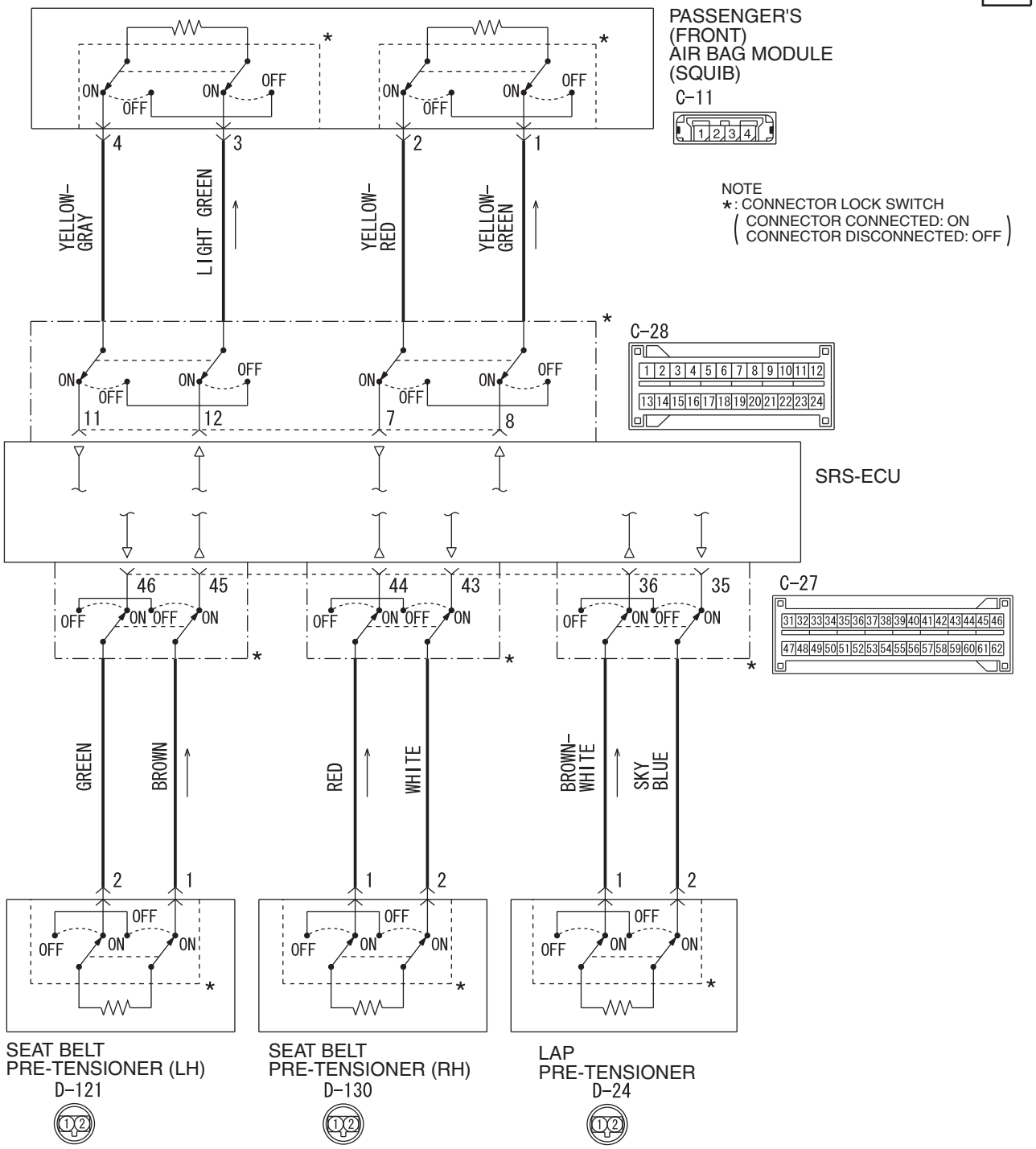

AC704176 AC

3

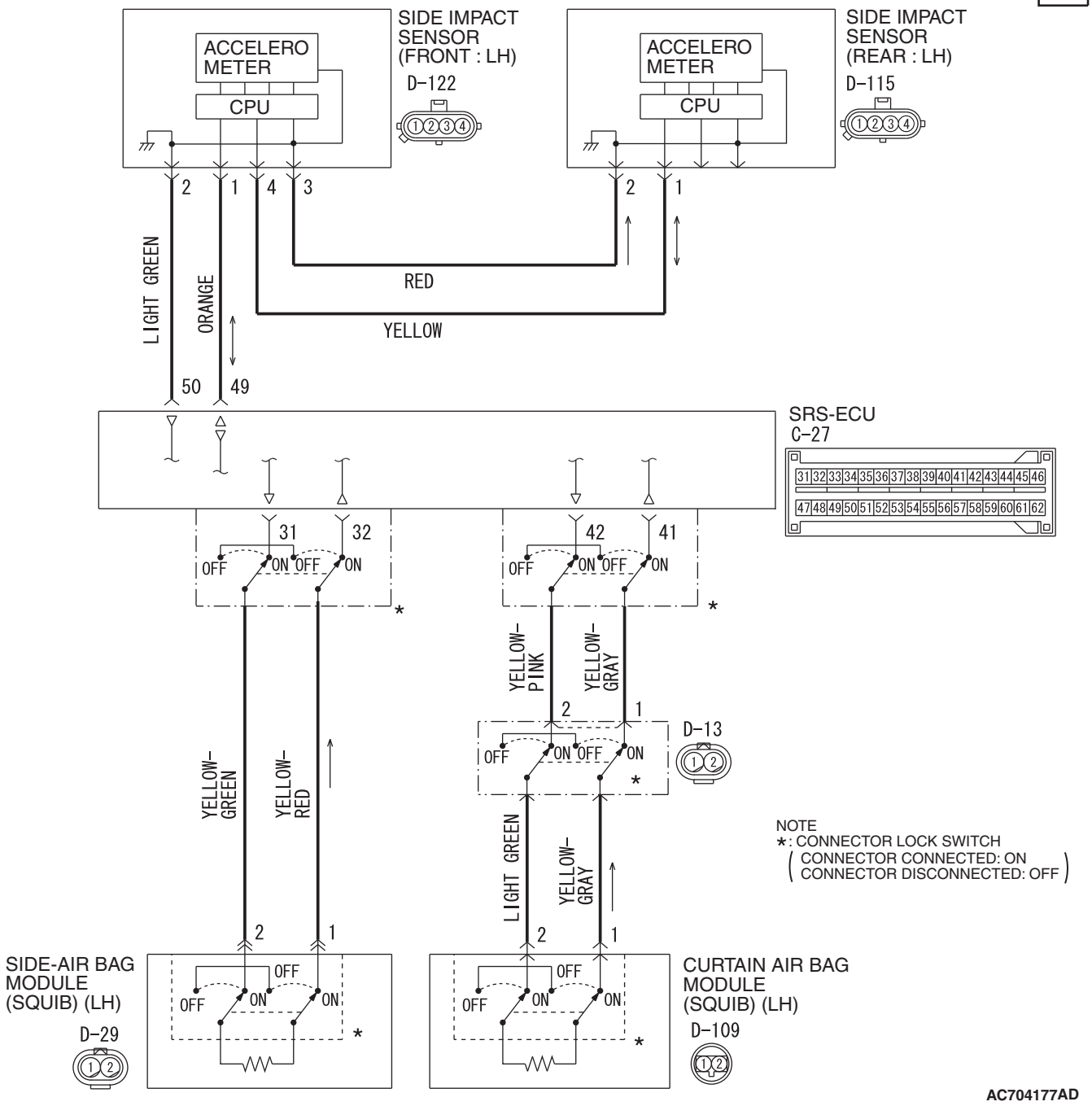
SIDE IMPACT SENSOR (FRONT : LH)
D-122
ACCELERO METER
CPU
SIDE IMPACT SENSOR (REAR : LH)
D-115
ACCELERO METER
CPU
LIGHT GREEN
ORANGE
RED
YELLOW
SRS-ECU
C-27
YELLOW-PINK
YELLOW-GRAY
D-13
YELLOW-GREEN
YELLOW-RED
LIGHT GREEN
YELLOW-GRAY
NOTE
*: CONNECTOR LOCK SWITCH
(CONNECTOR CONNECTED: ON
CONNECTOR DISCONNECTED: OFF)
SIDE-AIR BAG MODULE (SQUIB) (LH)
D-29
CURTAIN AIR BAG MODULE (SQUIB) (LH)
D-109
AC704177AD

4

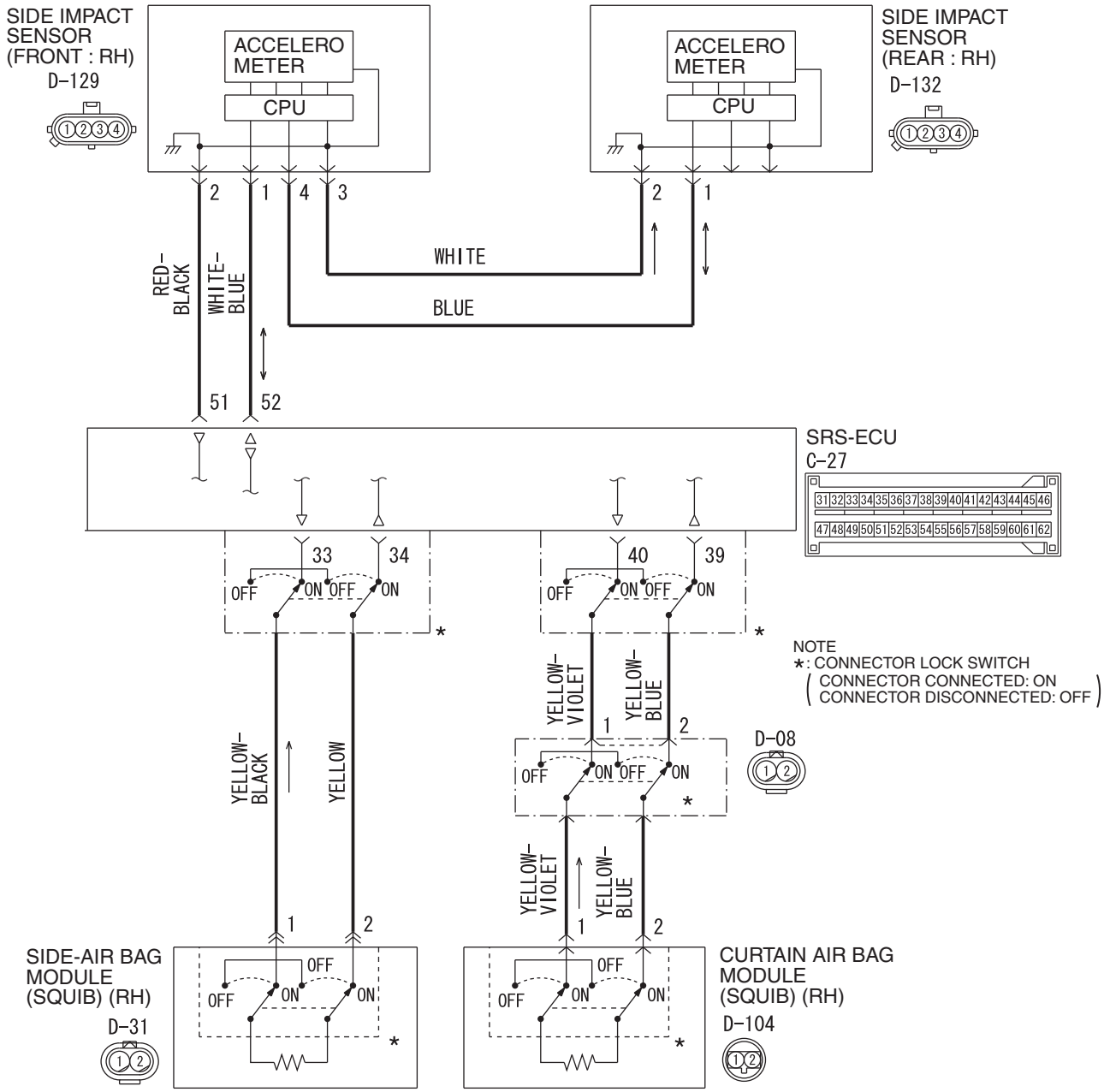

AC704178 AD

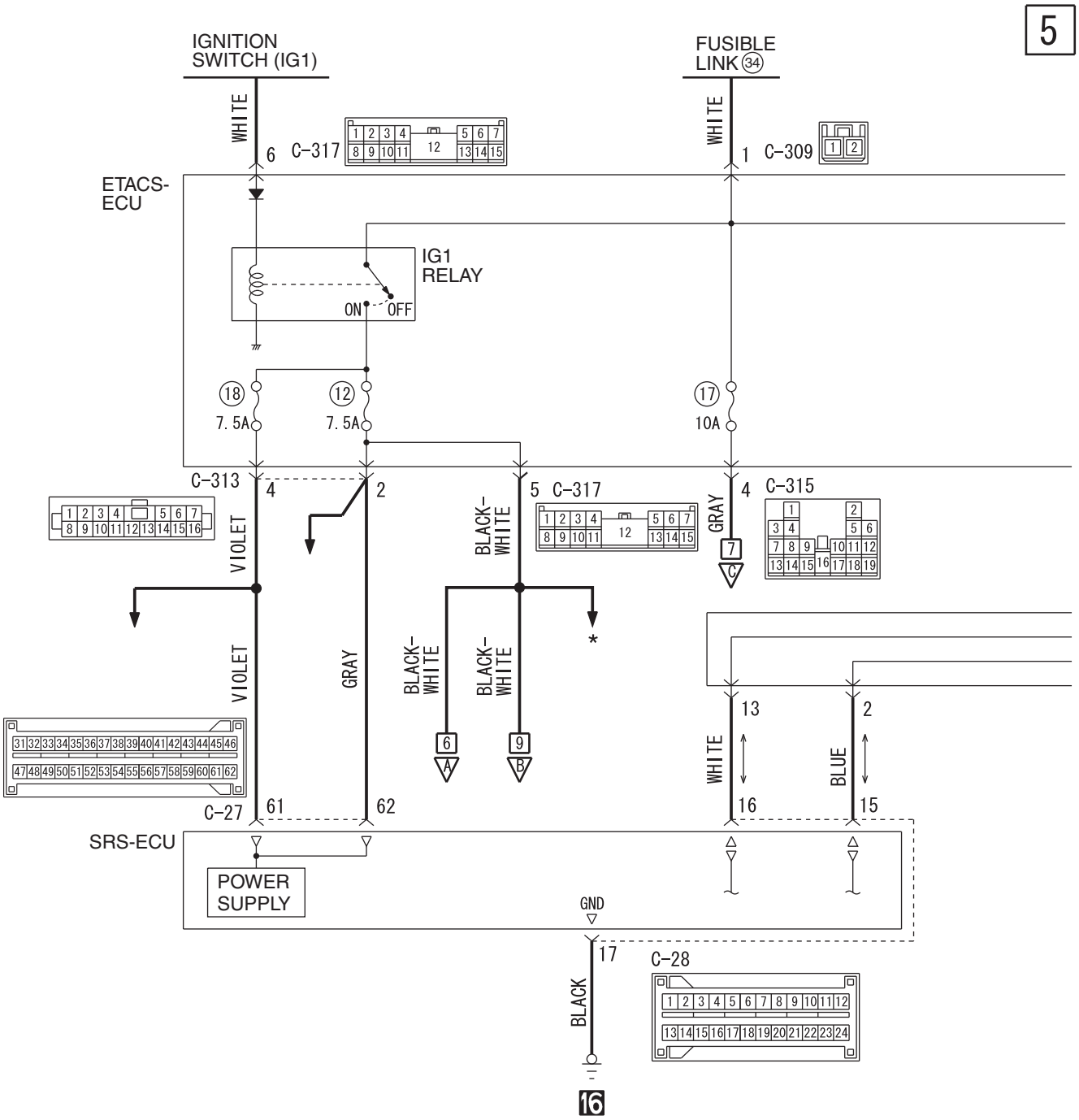
5
IGNITION SWITCH (IG1)
FUSIBLE LINK 34
WHITE
6
C-317
WHITE
1
C-309
ETACS-ECU
IG1 RELAY
ON
OFF
18
7.5A
12
7.5A
17
10A
C-313
4
2
5
C-317
GRAY
4
C-315
VIOLET
BLACK-WHITE
7
C
VIOLET
GRAY
BLACK-WHITE
BLACK-WHITE
*
6
A
9
B
13
2
WHITE
BLUE
C-27
61
62
16
15
SRS-ECU
POWER SUPPLY
GND
17
C-28
BLACK
16

AC802383 AC

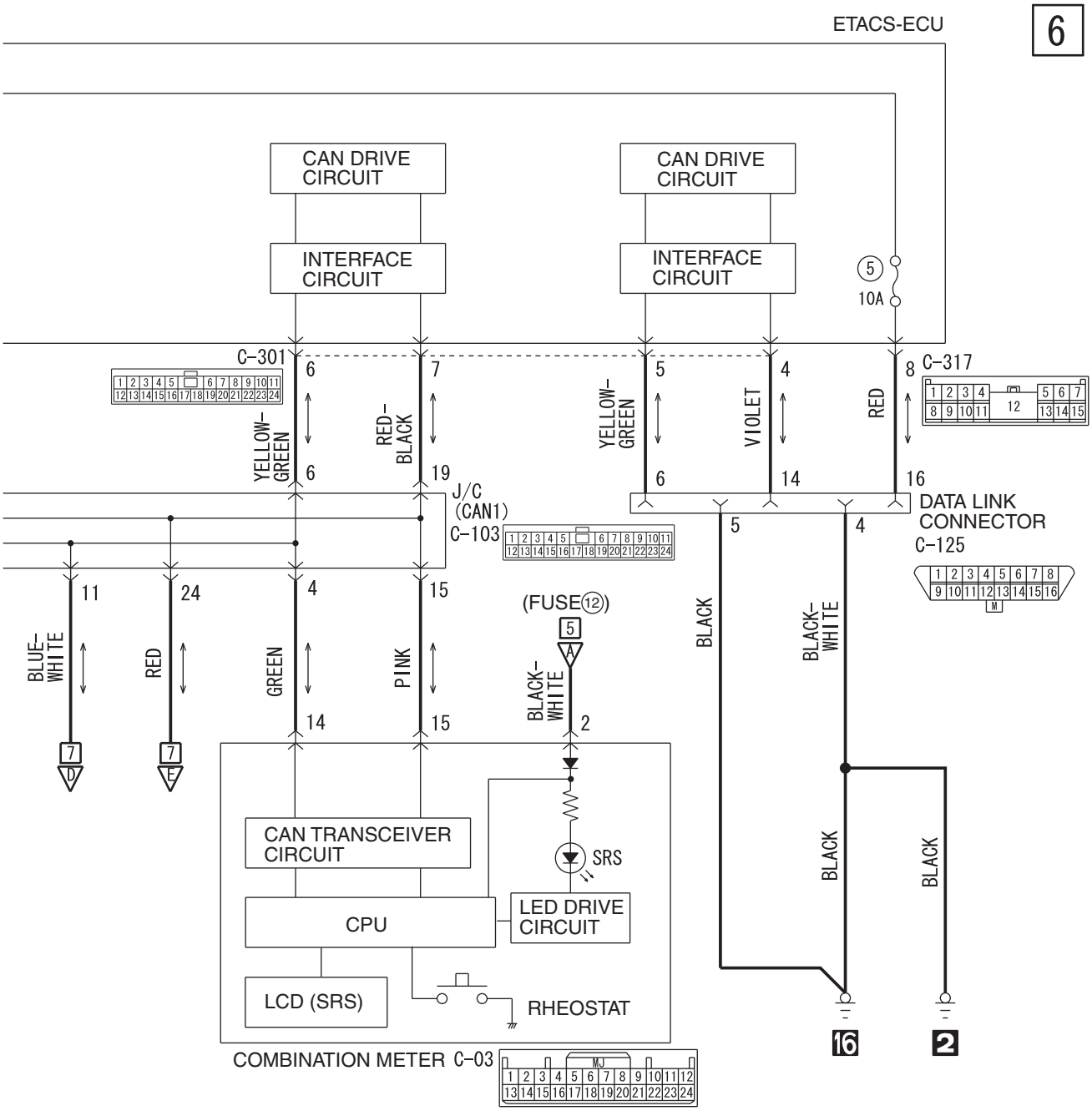
6
ETACS-ECU
CAN DRIVE CIRCUIT
INTERFACE CIRCUIT
CAN DRIVE CIRCUIT
INTERFACE CIRCUIT
5
10A
C-301
C-317
YELLOW-GREEN
RED-BLACK
YELLOW-GREEN
VIOLET
RED
J/C (CAN1)
C-103
DATA LINK CONNECTOR
C-125
BLUE-WHITE
RED
GREEN
PINK
(FUSE⑫)
BLACK-WHITE
BLACK
BLACK-WHITE
BLACK
BLACK
CAN TRANSCEIVER CIRCUIT
SRS
CPU
LED DRIVE CIRCUIT
LCD (SRS)
RHEOSTAT
COMBINATION METER C-03
16
2

AC901207AB

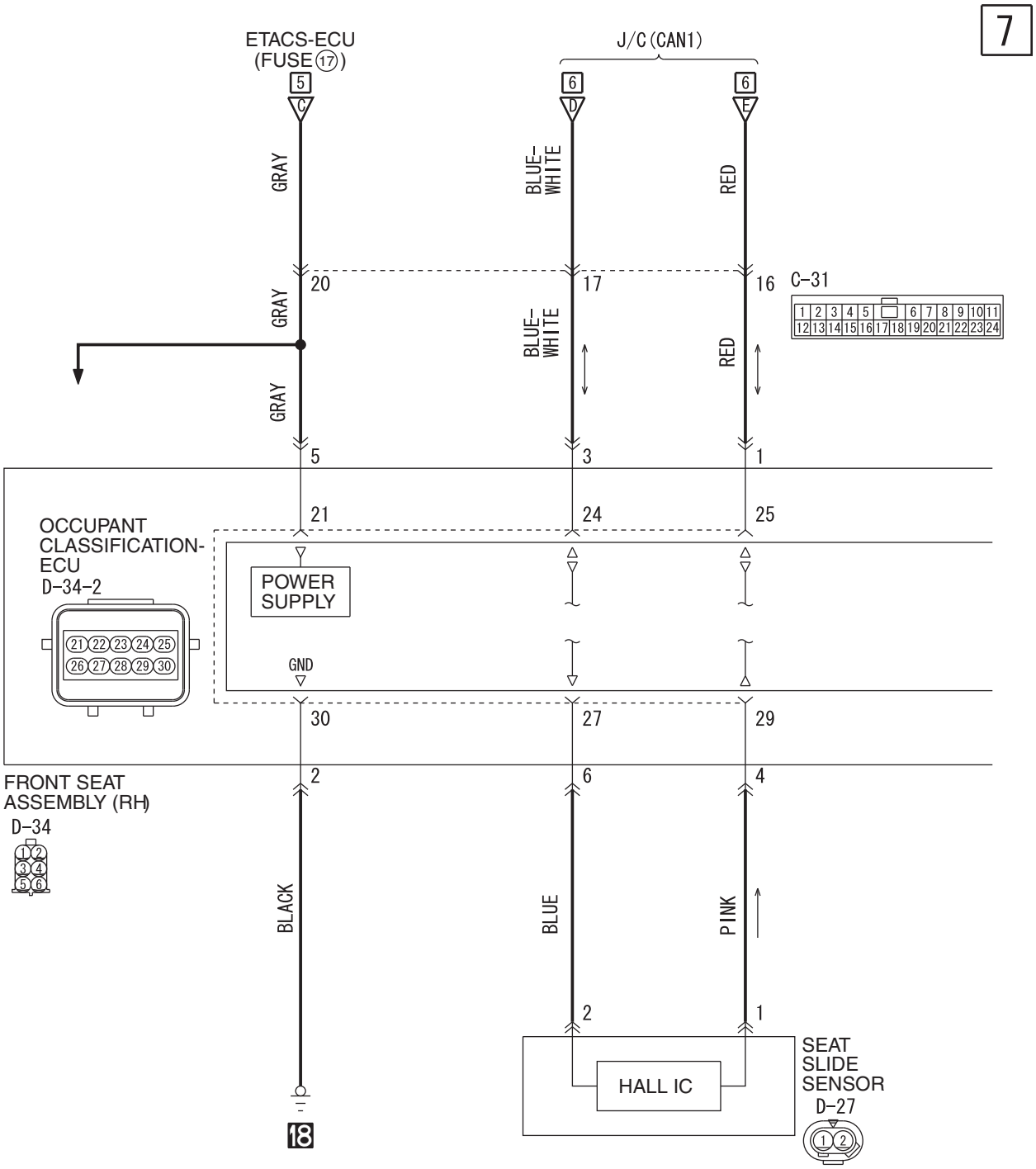
7
ETACS-ECU
(FUSE 17)
J/C (CAN1)
5
C
6
D
6
E
GRAY
BLUE-WHITE
RED
20
17
16
C-31
GRAY
BLUE-WHITE
RED
GRAY
5
3
1
21
24
25
OCCUPANT CLASSIFICATION-ECU
D-34-2
POWER SUPPLY
GND
30
27
29
FRONT SEAT ASSEMBLY (RH)
D-34
2
6
4
BLACK
BLUE
PINK
2
1
HALL IC
SEAT SLIDE SENSOR
D-27
18

AC704181AB

8

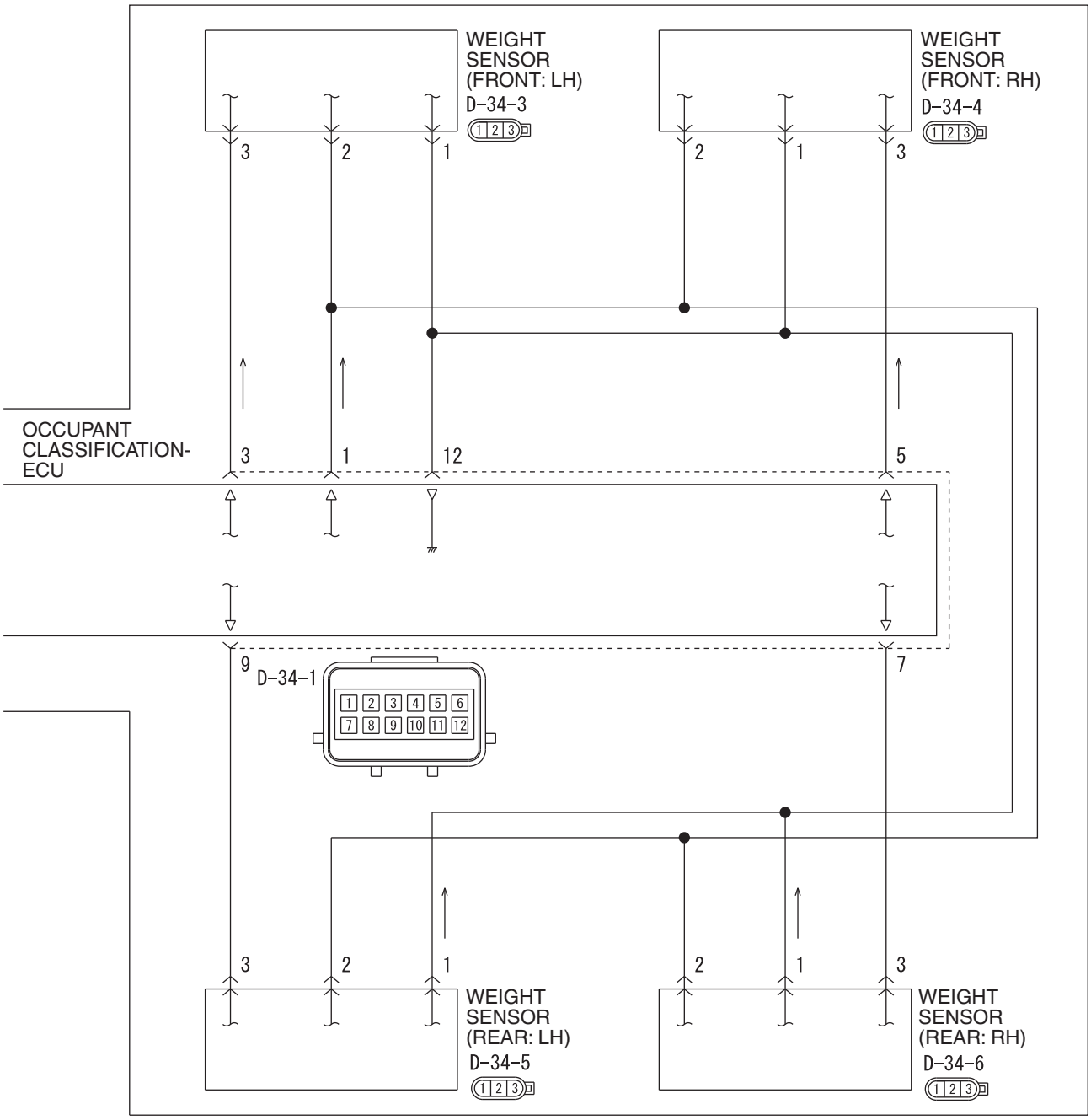

AC803867AB

9

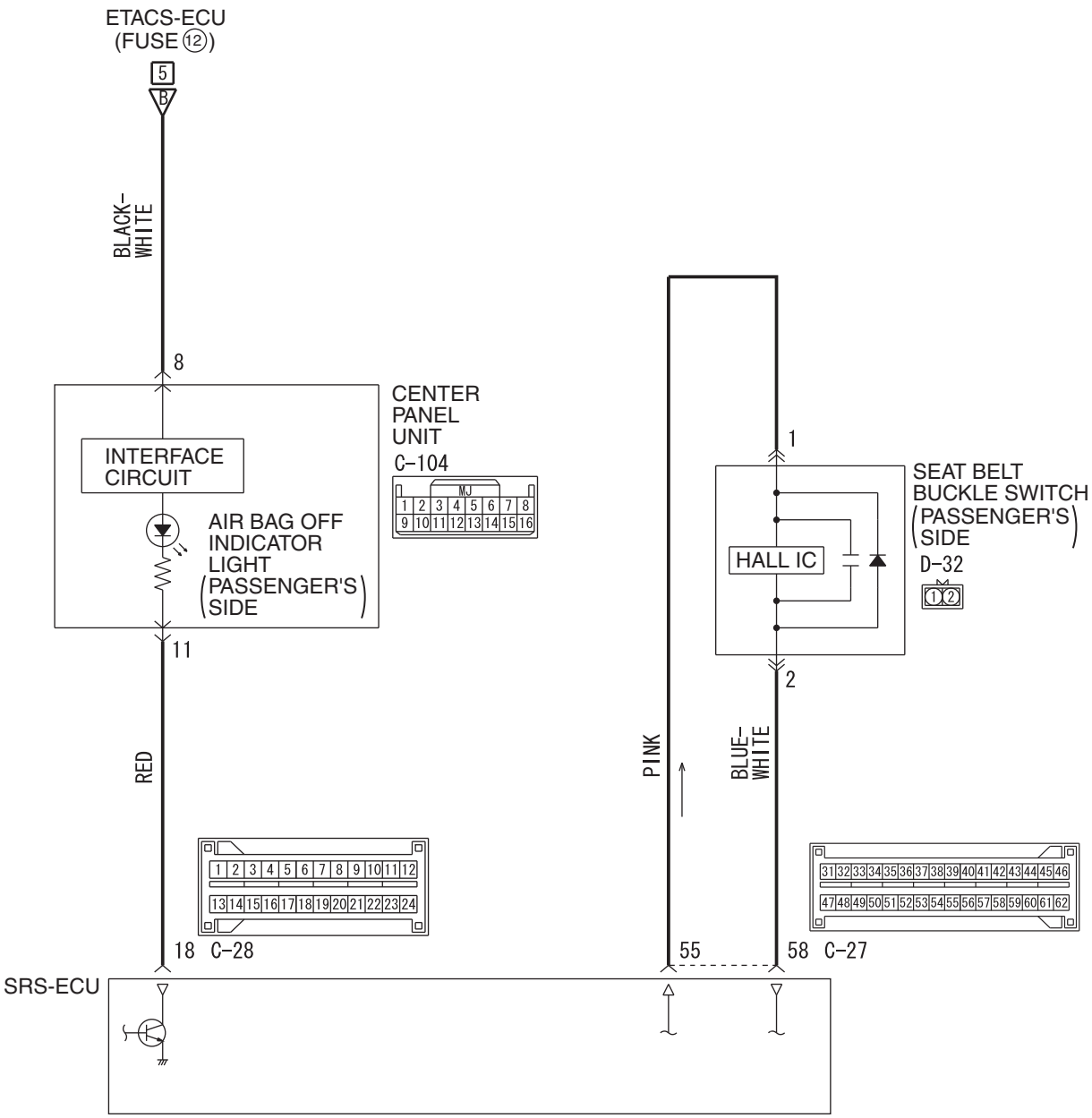

AC803005 AC

COMPONENT LOCATION

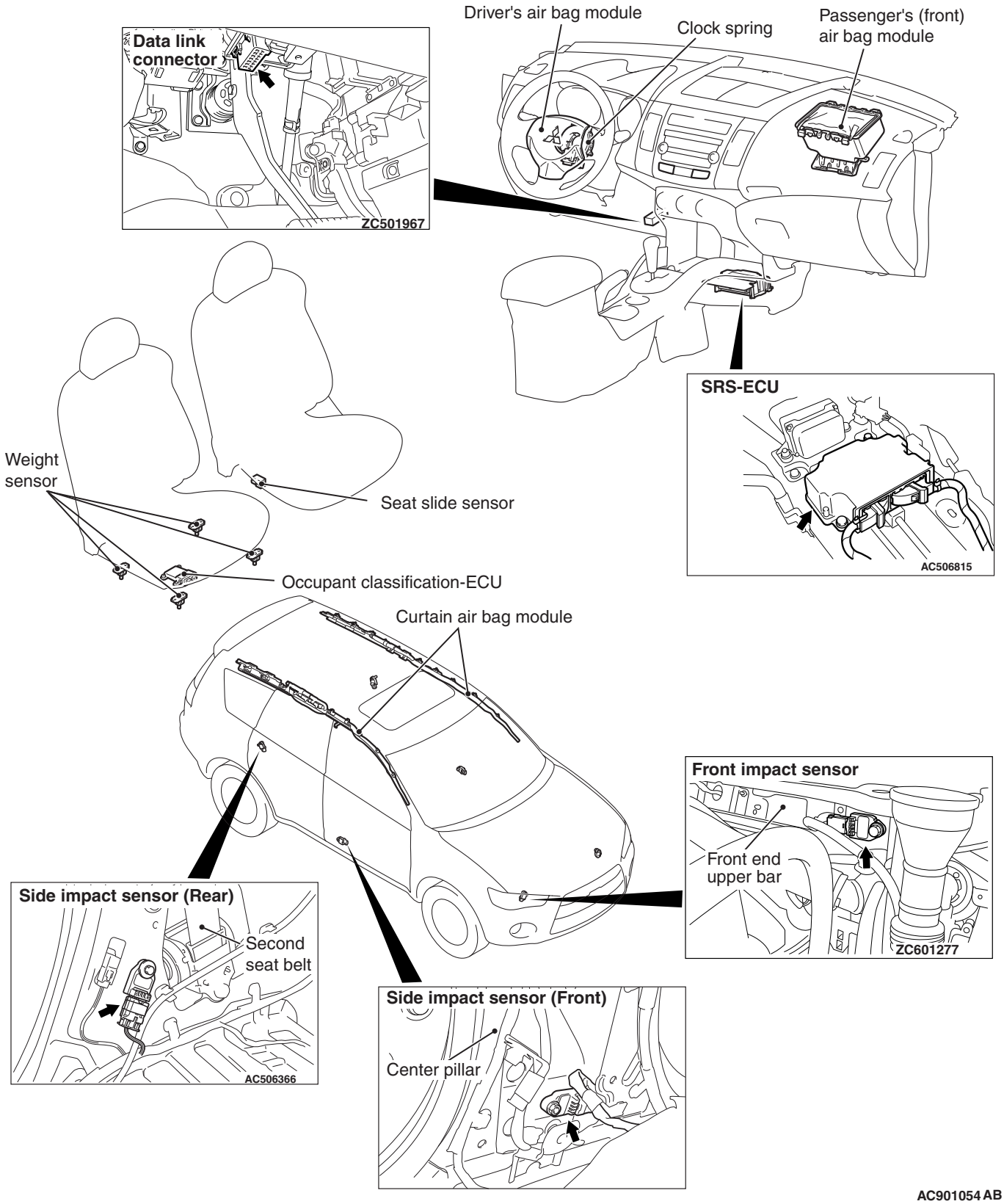

NOTE: The illustration above shows the front impact sensor (RH) and the side impact sensor (RH). The position of the front impact sensor (LH) and the side impact sensor (LH) is symmetrical to this.

TSB Revision

SERVICE PRECAUTIONS

M1524000301544

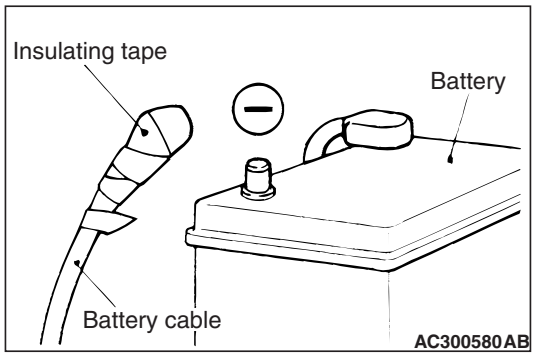

⚠ DANGER

- ***In order to avoid injury to yourself or others from accidental deployment of the air bag during servicing, read and carefully follow all the precautions and procedures described in this manual.***
- ***After disconnecting the battery cable, wait 60 seconds or more before proceeding with the following work. The SRS system is designed to retain enough voltage to deploy the air bag for a short time even after the battery has been disconnected, so serious injury may result from unintended air bag deployment if work is done on the SRS system immediately after the battery cables are disconnected.***
- ***The SRS-ECU adopts the rollover specification that the curtain airbag and seat belt pre-tensioner operate at the occurrence of rollover. Therefore, do not tilt the vehicle to the right and left with the IG ON or tilt the SRS-ECU to the right and left with the IG ON and the harness installed.***

⚠ WARNING

- ***Battery posts, terminals and related accessories contain lead and lead compounds. WASH HANDS AFTER HANDLING.***
- ***Certain components of this vehicle, such as air bag modules and seat belt pre-tensioners, may contain perchlorate materials. Special handling may apply. For additional information, see www.dtsc.ca.gov/hazardouswaste/perchlorate.***
- ***Do not use any electrical test equipment on or near the SRS components, except those specified on P.52B-427.***
- ***Never Attempt to Repair the Following Components: SRS-ECU, Clock Spring, Air Bag Module, Front impact sensor, Side Impact Sensor, Seat Belt with Pre-tensioner, Seat slide sensor, Front seat assembly. If any of these components are diagnosed as faulty, they should only be replaced, in accordance with the INDIVIDUAL COMPONENT SERVICE procedures in this manual, starting on P.52B-434.***
- ***Do not attempt to repair the wiring harness connectors of the SRS. If any of the connectors are diagnosed as faulty, replace the wiring harness. If the wires are diagnosed as faulty, replace or repair the wiring harness according to the following table.***

SRS-ECU connector

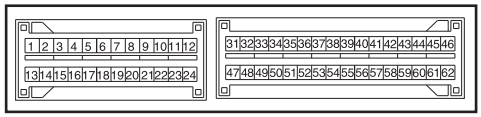

AC506921AB

SRS-ECU terminal No.	Destination of wiring harness	Corrective action
5, 6	Instrument panel wiring harness → Clock spring →Air bag module (Driver's side) 1st squib side	Correct or replace the instrument panel wiring harness. Replace the clock spring.
7, 8	Instrument panel wiring harness →Air bag module (Front passenger's side) 1st squib side	Correct or replace the instrument panel wiring harness.
9, 10	Instrument panel wiring harness → Clock spring →Air bag module (Driver's side) 2nd squib side	Correct or replace the instrument panel wiring harness. Replace the clock spring.
11, 12	Instrument panel wiring harness →Air bag module (Front passenger's side) 2nd squib side	Correct or replace the instrument panel wiring harness.
15, 16	Can line	Correct or replace can line.
17	Instrument panel wiring harness → Ground	Correct or replace the instrument panel wiring harness.
18	Instrument panel wiring harness →Air bag OFF indicator light	Correct or replace the instrument panel wiring harness.
21, 22	Instrument panel wiring harness →Front wiring harness →Front impact sensor (LH)	Correct or replace each wiring harness.
23, 24	Instrument panel wiring harness →Front wiring harness →Front impact sensor (RH)	Correct or replace each wiring harness.
31, 32	Floor wiring harness →Side-airbag module (LH)	Correct or replace the floor wiring harness.
33, 34	Floor wiring harness →Side-airbag module (RH)	Correct or replace the floor wiring harness.
35, 36	Floor wiring harness →Lap pre-tensioner	Correct or replace the floor wiring harness.
39, 40	Floor wiring harness →Curtain air bag wiring harness (RH) →Curtain air bag module (RH)	Correct or replace each wiring harness.
41, 42	Floor wiring harness →Curtain air bag wiring harness (LH) →Curtain air bag module (LH)	Correct or replace each wiring harness.
43, 44	Floor wiring harness →Seat belt pre-tensioner (RH)	Correct or replace the floor wiring harness.
45, 46	Floor wiring harness →Seat belt pre-tensioner (LH)	Correct or replace the floor wiring harness.
49, 50	Floor wiring harness →Side impact sensor (LH)	Correct or replace the floor wiring harness.
51, 52	Floor wiring harness →Side impact sensor (RH)	Correct or replace the floor wiring harness.
55, 58	Floor wiring harness →Passenger’s seat belt buckle switch	Correct or replace the floor wiring harness.

SRS-ECU terminal No.	Destination of wiring harness	Corrective action
61	Floor wiring harness →ETACS-ECU (fuse No.18)	Correct or replace the floor wiring harness.
62	Floor wiring harness →ETACS-ECU (fuse No.12)	Correct or replace the floor wiring harness.

⚠ WARNING

- ***The SRS components and seat belt with pre-tensioner should not be subjected to heat, so remove the SRS-ECU, driver's and front passenger's air bag modules, clock spring, side-airbag modules, Curtain air bag modules, front and side impact sensor and seat belt pre-tensioner before drying or baking the vehicle after painting.***
  - ***SRS-ECU, air bag module, clock spring, impact sensor: 93° C (200° F) or more***
  - ***Seat belt with pre-tensioner 90°C (194° F) or more***
- ***After servicing the SRS system, check the warning light operation to make sure that the system functions properly. (Refer to P.52B-3).***
- ***Make certain that the ignition switch is in the "LOCK"(OFF) position when the scan tool is connected or disconnected.***

SRS AIR BAG DIAGNOSIS

INTRODUCTION TO DIAGNOSIS

M1524005000523

The SRS system is controlled by the SRS-ECU. The SRS-ECU judges how severe a collision is by detecting signals from the left and right front impact sensors and side impact sensors, front air bag analog G-sensor and front air bag safing G-sensor and side-airbag safing G-sensor. If the impact is over a predetermined level, the SRS-ECU sends an ignition signal. At this time, if the safing G-sensor is on, the SRS air bag will inflate. (The passenger's air bag may not inflate according to the occupant detection data from the occupant classification-ECU.) The SRS warning light in the combination meter alerts a malfunction of the SRS system. If the following symptoms occur even when the vehicle has not been in a collision, there may be a malfunction in the SRS system.

- The SRS warning light does not go off within approximately seven seconds after the ignition switch has been turned to the "ON" position.
- The SRS warning light does not illuminate when the ignition switch is turned to the "ON" position.

Refer to Post-collision Diagnosis when inspecting and servicing a vehicle that has been in a collision (Refer to P.52B-428).

TROUBLESHOOTING STRATEGY

M1524003100892

Use these steps to plan your diagnostic strategy. If you follow them carefully, you will be sure that you have exhausted all of the possible ways to find a SRS fault.

1. Gather information about the problem from the customer.
2. Verify that the condition described by the customer exists.
3. Check the vehicle for any SRS diagnostic trouble codes (SRS DTC).
4. If you cannot verify the condition but there are no SRS DTCs, the malfunction is intermittent. Refer to GROUP 00, How to Use Troubleshooting – Inspection Service Points –How to Cope with Intermittent Malfunctions P.00-15.
5. If there is a SRS DTC, record the code number, then erase the code from vehicle memory using scan tool (M.U.T.-III Sub Assembly) MB991958.
6. Recreate the SRS DTC set conditions to see if the same SRS DTC will be set again.
   - If the same SRS DTC is set again, follow the Inspection Chart for the DTC and find the fault.
   - If you cannot get the same SRS DTC to be set again, the malfunction is intermittent. Refer to GROUP 00, How to Use Troubleshooting – Inspection Service Points –How to Cope with Intermittent Malfunctions P.00-15.

DIAGNOSTIC FUNCTION

M1524013800201

HOW TO CONNECT THE SCAN TOOL (M.U.T.-III)

Required Special Tools:

- MB991958: Scan Tool (M.U.T.-III Sub Assembly)
  - MB991824:Vehicle Communication Interface(V.C.I.)
  - MB991827:M.U.T.-III USB Cable
  - MB991910:M.U.T.-III Main Harness A

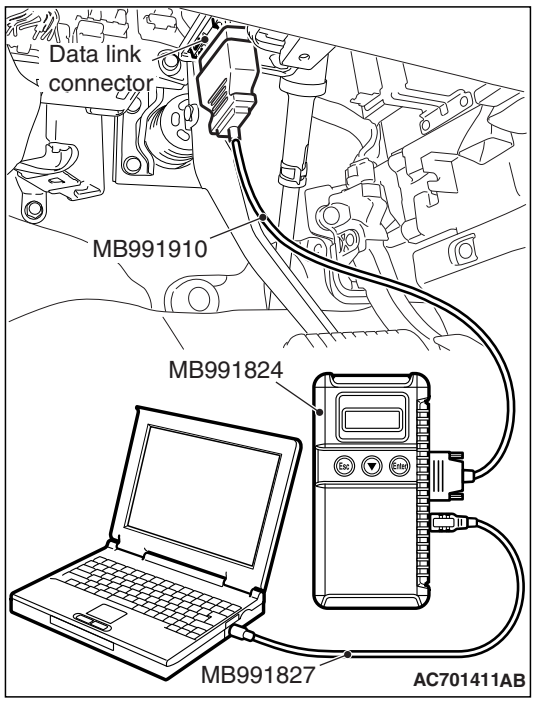

⚠ CAUTION

To prevent damage to scan tool MB991958, always turn the ignition switch to the "LOCK" (OFF) position before connecting or disconnecting scan tool MB991958.

1. Ensure that the ignition switch is at the "LOCK" (OFF) position.
2. Start up the personal computer.
3. Connect special tool MB991827 to special tool MB991824 and the personal computer.
4. Connect special tool MB991910 to special tool MB991824.
5. Connect special tool MB991910 to the data link connector.
6. Turn the power switch of special tool MB991824 to the "ON" position.

   NOTE: When special tool MB991824 is energized, special tool MB991824 indicator light will be illuminated in a green color.
7. Start the M.U.T.-III system on the personal computer.

NOTE: Disconnecting scan tool MB991958 is the reverse of the connecting sequence, making sure that the ignition switch is at the "LOCK" (OFF) position.

HOW TO READ AND ERASE DIAGNOSTIC TROUBLE CODES

Required Special Tools:

- MB991958: Scan Tool (M.U.T.-III Sub Assembly)
  - MB991824:Vehicle Communication Interface(V.C.I.)
  - MB991827:M.U.T.-III USB Cable
  - MB991910:M.U.T.-III Main Harness A

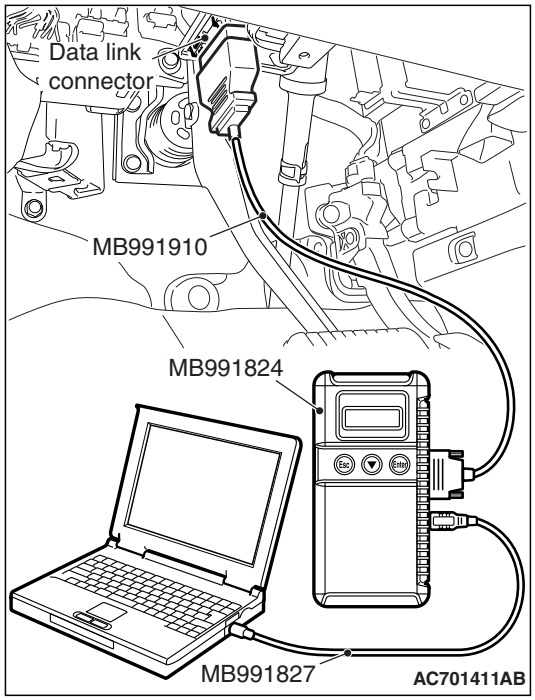

⚠ CAUTION

To prevent damage to scan tool MB991958, always turn the ignition switch to the "LOCK" (OFF) position before connecting or disconnecting scan tool MB991958.

NOTE: If the battery voltage is low, diagnostic trouble codes will not be set. Check the battery if scan tool MB991958 does not display.

1. Connect scan tool MB991958 to the data link connector.
2. Turn the ignition switch to the "ON" position.
3. Select "System select" from the start-up screen.
4. Select "From 2006 MY" of "Model Year." When the "Vehicle Information" is displayed, check the contents.
5. Select "SRS-AIR BAG" from "System List," and press the "OK" button.

   NOTE: When the "Loading Option Setup" list is displayed, check the applicable item.
6. Select "Diagnostic Trouble Code" to read the DTC.
7. If a DTC is set, it is shown.
8. Choose "Erase DTCs" to erase the DTC.

SRS WARNING LIGHT CHECK

M1524004301171

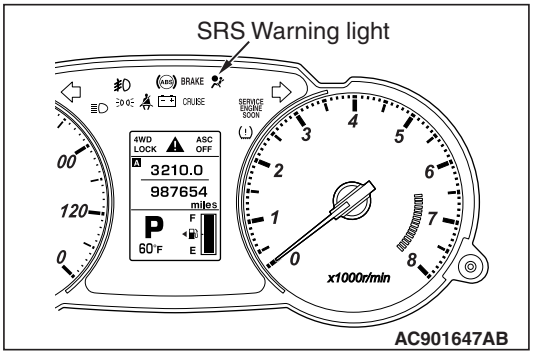

1. Check that the SRS warning light illuminates when the ignition switch is in the "ON" position.
2. Check that it illuminates for approximately seven seconds and then goes out.
3. If not, check for DTC.

PASSENGER'S SEAT BELT WARNING LIGHT CHECK

M1524026200113

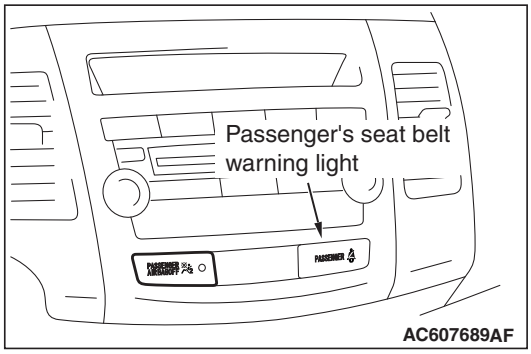

When an adult on the front passenger's seat wears the seat belt with the ignition switch "ON," confirm that the passenger's seat belt warning light goes out.
The light comes on when a person sits on the front passenger seat but does not fasten the seat belt.

PASSENGER'S AIR BAG OFF INDICATOR LIGHT CHECK

M1524026300154

SYSTEM CHECK

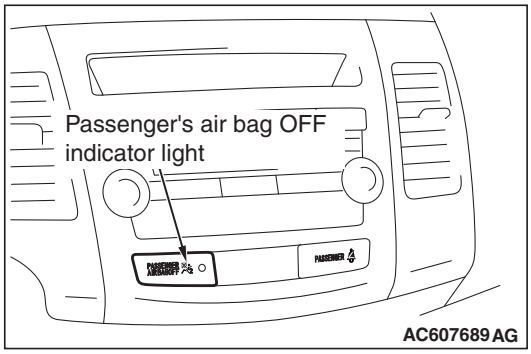

Check that the passenger's air bag OFF indicator light illuminates when the ignition switch is in the "ON" position.
Check that it illuminates for approximately seven seconds and then goes out.
In the following situations, the indicator will stay on to show that the passenger's (front) air bag is not operational.

- The occupant classification-ECU and weight sensor sense 66 pounds (30 kg) on the front passenger seat.
- The front passenger's seat is not occupied.

ILLUMINATION CHECK

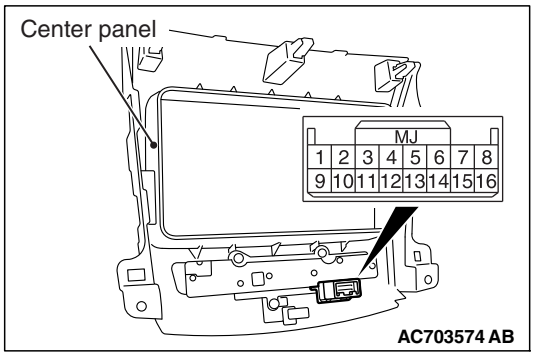

1. Remove the center panel assembly.
2. Connect the positive battery terminal with the center panel assembly connector terminal No. 8. Then, check if the passenger's air bag OFF indicator light is illuminated when the negative battery terminal and the center panel assembly connector terminal No. 11 are connected.
3. If the passenger's air bag OFF indicator light is illuminated, it is judged good.

CHECK CHART FOR DIAGNOSIS CODES

M1524003301617

⚠ CAUTION

During diagnosis, a DTC code associated with another system may be set when the ignition switch is turned on with connector(s) disconnected. After completing the repair, confirm all systems for DTC code(s). If DTC code(s) are set, erase them all.

Inspect according to the inspection chart that is appropriate for the DTC.

Diagnostic trouble Code No.	Inspection item	Reference page
B1206	Passenger's air bag OFF indicator light (open circuit)	P.52B-36
B1207	Passenger's air bag OFF indicator light (short circuit between circuit terminal)	P.52B-41
B1B00	Driver's air bag module (1st squib) system (shorted to squib circuit ground)	P.52B-45
B1B01	Driver's air bag module (1st squib) system (shorted to squib circuit power supply)	P.52B-53
B1B02	Driver's air bag module (1st squib) system (squib circuit open)	P.52B-61
B1B03	Driver's air bag module (1st squib) system (short circuit between squib circuit terminals)	P.52B-68
B1B04	Driver's air bag module (2nd squib) system (shorted to squib circuit ground)	P.52B-45
B1B05	Driver's air bag module (2nd squib) system (shorted to squib circuit power supply)	P.52B-53
B1B06	Driver's air bag module (2nd squib) system (squib circuit open)	P.52B-61
B1B07	Driver's air bag module (2nd squib) system (short circuit between squib circuit terminals)	P.52B-68
B1B08	Passenger's (front) air bag module (1st squib) system (shorted to squib circuit ground)	P.52B-77
B1B09	Passenger's (front) air bag module (1st squib) system (shorted to squib circuit power supply)	P.52B-84
B1B0A	Passenger's (front) air bag module (1st squib) system (squib circuit open)	P.52B-91
B1B0B	Passenger's (front) air bag module (1st squib) system (short circuit between squib circuit terminals)	P.52B-97
B1B0C	Passenger's (front) air bag module (2nd squib) system (shorted to squib circuit ground)	P.52B-77
B1B0D	Passenger's (front) air bag module (2nd squib) system (shorted to squib circuit power supply)	P.52B-84
B1B0E	Passenger's (front) air bag module (2nd squib) system (squib circuit open)	P.52B-91
B1B0F	Passenger's (front) air bag module (2nd squib) system (short circuit between squib circuit terminals)	P.52B-97
B1B18	Curtain air bag module (LH) (squib) system (shorted to squib circuit ground)	P.52B-104

Diagnostic trouble Code No.	Inspection item	Reference page
B1B19	Curtain air bag module (LH) (squib) system (shorted to squib circuit power supply)	P.52B-110
B1B1A	Curtain air bag module (LH) (squib) system (squib circuit open)	P.52B-116
B1B1B	Curtain air bag module (LH) (squib) system (short circuit between squib circuit terminals)	P.52B-123
B1B20	Curtain air bag module (RH) (squib) system (shorted to squib circuit ground)	P.52B-131
B1B21	Curtain air bag module (RH) (squib) system (shorted to squib circuit power supply)	P.52B-138
B1B22	Curtain air bag module (RH) (squib) system (squib circuit open)	P.52B-144
B1B23	Curtain air bag module (RH) (squib) system (short circuit between squib circuit terminals)	P.52B-151
B1B54	Seat belt buckle switch (RH) circuit (ground side) shorted	P.52B-159
B1B55	Seat belt buckle switch (RH) circuit (power supply side) shorted	P.52B-159
B1B56	Seat belt buckle switch (RH) circuit open	P.52B-159
B1B70	Malfunction of G-sensor inside front impact sensor (LH)	P.52B-164
B1B71	Malfunction of G-sensor inside front impact sensor (RH)	P.52B-164
B1B72	Malfunction of G-sensor inside side impact sensor (front) (LH)	P.52B-166
B1B73	Malfunction of G-sensor inside side impact sensor (rear) (LH)	P.52B-166
B1B75	Malfunction of G-sensor inside side impact sensor (front) (RH)	P.52B-166
B1B76	Malfunction of G-sensor inside side impact sensor (rear) (RH)	P.52B-166
B1BA3	Driver’s seat slide sensor malfunction (occupant classification-ECU)	P.52B-170
B1BA4	Passenger’s seat slide sensor malfunction (occupant classification-ECU)	P.52B-170
B1BA5	SRS-ECU squib count mismatch	P.52B-172
B1BAA	Occupant classification-ECU configuration mismatch	P.52B-173
B1BC7	SRS-ECU (record data full) system	P.52B-175
B1BCF	Roll over sensor malfunction	P.52B-177
B1C27	Side-airbag module (LH) (squib) system (shorted to squib circuit ground)	P.52B-178
B1C28	Side-airbag module (LH) (squib) system (shorted to squib circuit power supply)	P.52B-184
B1C29	Side-airbag module (LH) (squib) system (squib circuit open)	P.52B-189
B1C2A	Side-airbag module (LH) (squib) system (short circuit between squib circuit terminals)	P.52B-194

Diagnostic trouble Code No.	Inspection item	Reference page
B1C2B	Side-airbag module (RH) (squib) system (shorted to squib circuit ground)	P.52B-200
B1C2C	Side-airbag module (RH) (squib) system (shorted to squib circuit power supply)	P.52B-205
B1C2D	Side-airbag module (RH) (squib) system (squib circuit open)	P.52B-210
B1C2E	Side-airbag module (RH) (squib) system (short circuit between squib circuit terminals)	P.52B-215
B1C33	Driver's lap pre-tensioner (squib) system (shorted to squib circuit ground)	P.52B-221
B1C34	Driver's lap pre-tensioner (squib) system (shorted to squib circuit power supply)	P.52B-226
B1C35	Driver's lap pre-tensioner (squib) system (squib circuit open)	P.52B-231
B1C36	Driver's lap pre-tensioner (squib) system (short circuit between squib circuit terminals)	P.52B-236
B1C38	Driver's seat belt pre-tensioner (squib) system (shorted to squib circuit ground)	P.52B-242
B1C39	Driver's seat belt pre-tensioner (squib) system (shorted to squib circuit power supply)	P.52B-247
B1C3A	Driver's seat belt pre-tensioner (squib) system (squib circuit open)	P.52B-252
B1C3B	Driver's seat belt pre-tensioner (squib) system (short circuit between squib circuit terminals)	P.52B-257
B1C47	Front passenger's seat belt pre-tensioner (squib) system (shorted to squib circuit ground)	P.52B-263
B1C48	Front passenger's seat belt pre-tensioner (squib) system (shorted to squib circuit power supply)	P.52B-268
B1C49	Front passenger's seat belt pre-tensioner (squib) system (squib circuit open)	P.52B-273
B1C4A	Front passenger's seat belt pre-tensioner (squib) system (short circuit between squib circuit terminals)	P.52B-278
B210D	Battery abnormal low voltage	P.52B-284
B212C	Open circuit to IG1 power supply (fuse No. 12 circuit)	P.52B-290
B212D	Open circuit to IG1 power supply (fuse No. 18 circuit)	P.52B-290
B2207	Occupant restraint controller internal 1	P.52B-177
B2208	Occupant restraint controller internal 2	P.52B-177
B2209	Occupant restraint controller internal 3	P.52B-177
B220A	Occupant restraint controller internal 4	P.52B-177
B220B	Occupant restraint controller firing stored energy	P.52B-177
B220C	Occupant restraint controller accelerometer 1	P.52B-177
B220D	Occupant restraint controller accelerometer 2	P.52B-177
B223D	OCM (Occupant Classification-ECU) DTC present	P.52B-297

Diagnostic trouble Code No.	Inspection item	Reference page
B2255	Occupant restraint controller roll-over feature disabled	P.52B-299
U0019	Bus off (CAN-B)	P.52B-301
U0141	ETACS CAN timeout	P.52B-394
U0154	Occupant classification-ECU CAN timeout	P.52B-304
U0155	Combination meter CAN timeout	P.52B-398
U0164	A/C -ECU CAN timeout	P.52B-400
U0168	KOS -ECU or WCM CAN timeout	P.52B-310
U0170	Front impact sensor (LH) communication error	P.52B-312
U0171	Front impact sensor (RH) communication error	P.52B-316
U0172	Side impact sensor (front) (LH) communication error	P.52B-320
U0173	Side impact sensor (front) (LH) communication error	P.52B-320
U0175	Side impact sensor (front) (RH) communication error	P.52B-328
U0176	Side impact sensor (rear) (RH) communication error	P.52B-332
U0184	Audio CAN timeout	P.52B-335
U0195	Satellite radio tuner CAN timeout	P.52B-337
U0197	Hands free Module CAN timeout	P.52B-339
U0212	Steering wheel sensor CAN timeout	P.52B-341
U1414	Defective Coding Data	P.52B-343
U1415	Coding not completed/Data fail	P.52B-344

DIAGNOSTIC TROUBLE CODE PROCEDURES <SRS-ECU>

DTC B1206: Passenger's Air Bag OFF Indicator Light (Open Circuit)

Air Bag OFF Indicator Light Drive Circuit

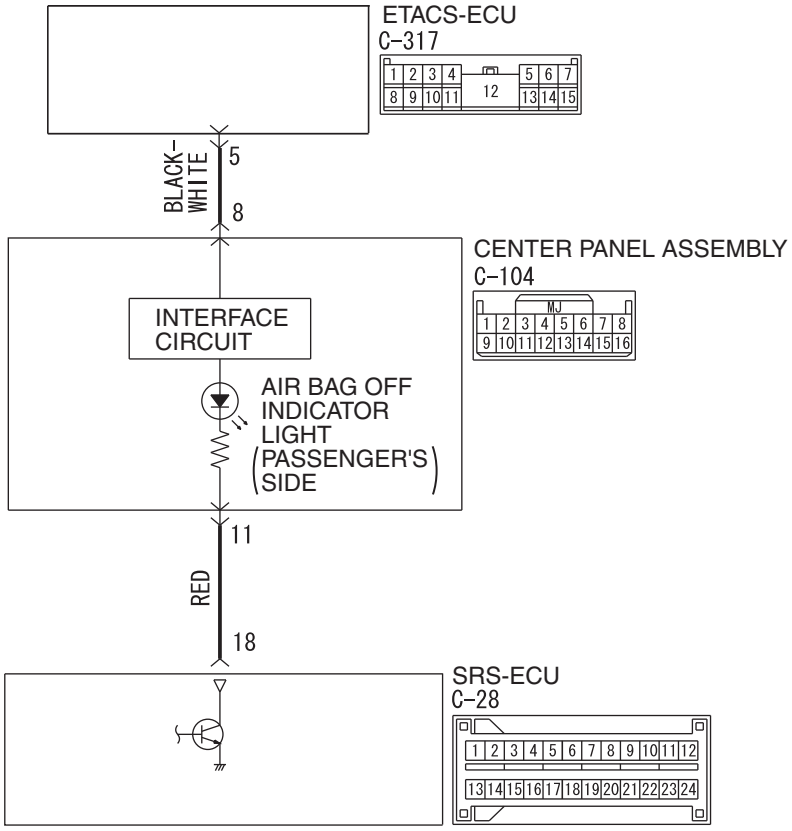

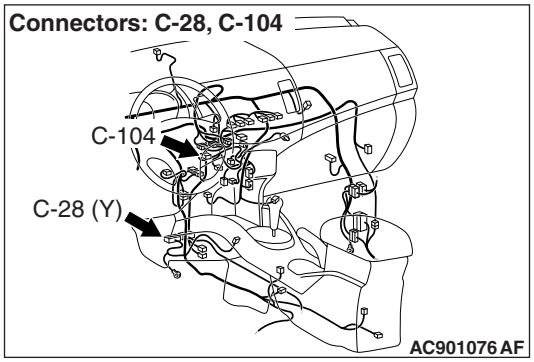

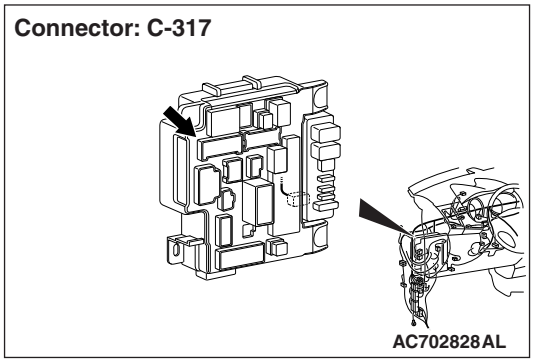

⚠ CAUTION

If DTC B1206 is set in the SRS-ECU, always diagnose the CAN main bus line.

CIRCUIT OPERATION

- Power for the passenger's air bag OFF indicator light is supplied from the fusible link (34).
- The passenger's air bag OFF indicator light illuminates when the ignition switch is turned to the "ON" position and goes out after approximately seven seconds if there is not a malfunction in the SRS system. In the following situations, the indicator will stay on to show that the passenger's (front) air bag is not operational.

- The occupant is determined to be less than 66 lbs (30 kg) by the occupant classification-ECU.
- The front passenger's seat is not occupied.

DTC SET CONDITIONS

This DTC will be set if an open circuit has occurred in the wiring harness between the passenger's air bag OFF indicator light and the SRS-ECU.

TROUBLESHOOTING HINTS

- Damaged wiring harnesses or connectors
- Malfunction of the SRS-ECU
- Malfunction of the passenger's air bag OFF indicator light

DIAGNOSIS

Required Special Tools:

- MB991958: Scan Tool (M.U.T.-III Sub Assembly)
  - MB991824: Vehicle Communication Interface (V.C.I.)
  - MB991827: M.U.T.-III USB Cable
  - MB991910: M.U.T.-III Main Harness A (Vehicles with CAN Communication System)

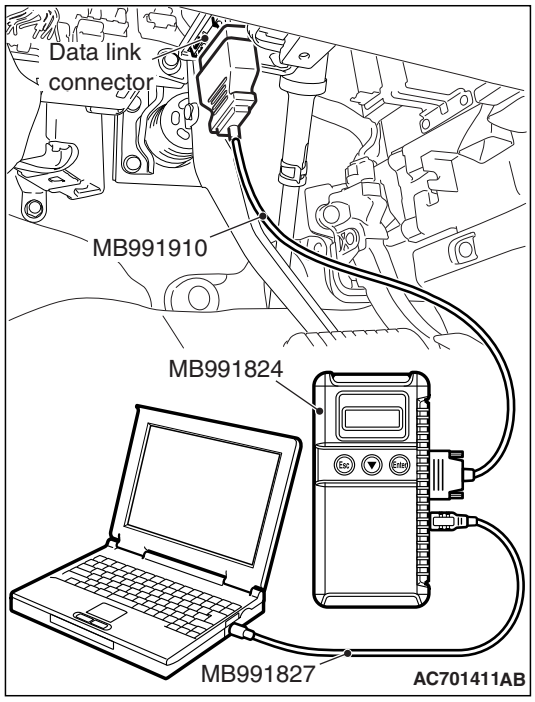

STEP 1. Using scan tool MB991958, diagnose the CAN bus line.

⚠ CAUTION

To prevent damage to scan tool MB991958, always turn the ignition switch to the "LOCK" (OFF) position before connecting or disconnecting scan tool MB991958.

(1) Connect scan tool MB991958. Refer to "How to connect the scan tool P.52B-28."
(2) Turn the ignition switch to the "ON" position.
(3) Diagnose the CAN bus line.
(4) Turn the ignition switch to the "LOCK" (OFF) position.

Q: Is the CAN bus line found to be normal?

YES : Go to Step 2.
NO : Repair the CAN bus line (Refer to GROUP 54C, Diagnosis P.54C-17).

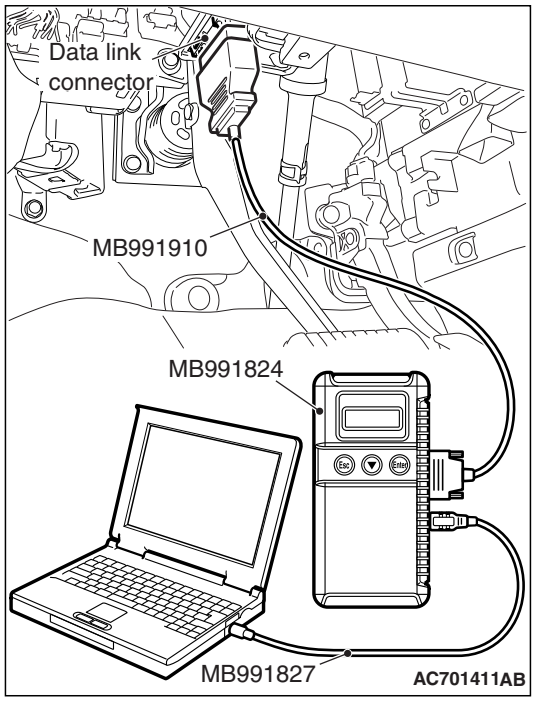

STEP 2. Recheck for diagnostic trouble code.

Check again if the DTC is set.

(1) Erase the DTC.
(2) Turn the ignition switch to the "ON" position.
(3) Check if the DTC is set.
(4) Turn the ignition switch to the "LOCK" (OFF) position.

Q: Is the DTC set?

YES : Go to Step 3.

NO : There is an intermittent malfunction such as poor engaged connector(s) or open circuit (Refer to GROUP 00, How to Cope with Intermittent Malfunction P.00-15).

STEP 3. Check the passenger's air bag OFF indicator light.

(1) It is checked whether the passenger's air bag OFF indicator light is normal (Refer to P.52B-31).

Q: Is the check result normal?

YES : Go to Step 4.

NO : Replace center panel assembly (Refer to GROUP 52A –Instrument Panel Assembly P.52A-2).

STEP 4. Check the harness for open circuit between SRS-ECU connector C-28 (terminal No.18) and the center panel assembly connector C-104 (terminal No.11).

(1) Disconnect the negative battery terminal.
(2) While pushing the part "A" indicated in the figure of the harness side connector, turn the lock lever to the direction of the arrow to release the lock lever, and disconnect the C-28 SRS-ECU connector.
(3) Disconnect the center panel assembly connector C-104.

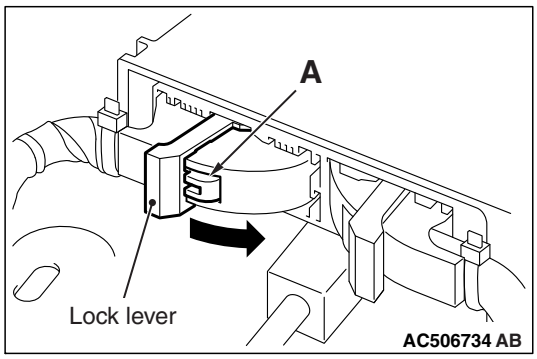

(4) Check for continuity between the following terminals. It should be less than 2 ohms.
- SRS-ECU connector C-28 (terminal No.18) and the center panel assembly connector C-104 (terminal No.11)

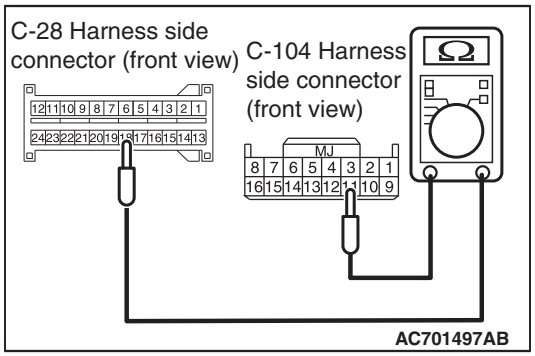

Q: Does continuity exist?

YES : Go to Step 5.
NO : Repair the harness wires.

STEP 5. Measure the voltage at the center panel assembly connector.

(1) Disconnect the negative battery terminal.
(2) Disconnect the C-104 center panel assembly connector.
(3) Connect the negative battery terminal.
(4) Ignition switch: ON.
(5) Measure the voltage between the C-104 harness side connector terminal No. 8 and body ground.
- The voltage should measure approximately 12 volts (battery positive voltage).

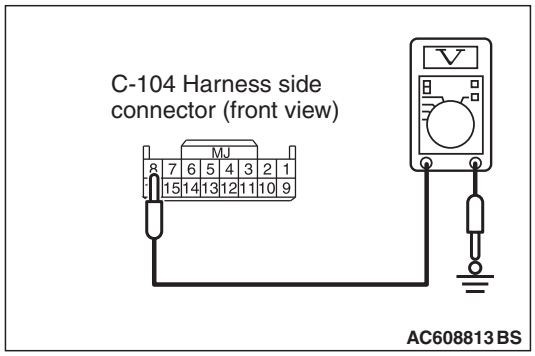

Q: Is the measured voltage approximately 12 volts (battery positive voltage)?

YES : Go to Step 6.
NO : Repair the wiring harness between the C-317 ETACS-ECU connector terminal No. 5 and the C-104 instrument center panel assembly connector terminal No. 8.

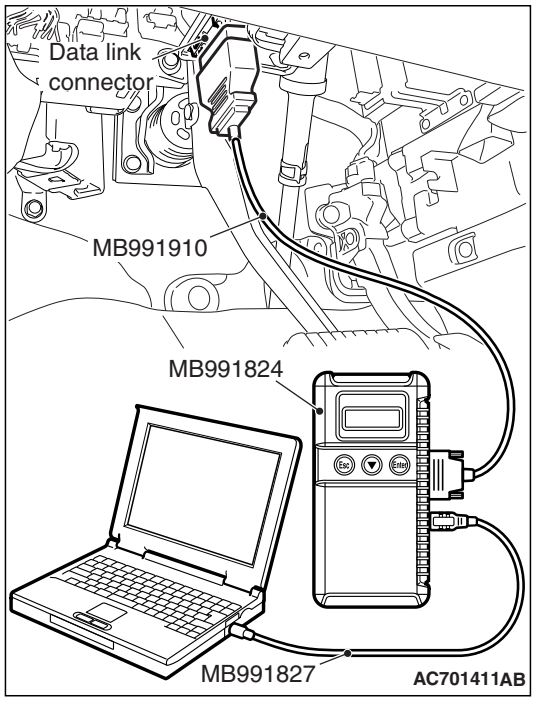

STEP 6. Recheck for diagnostic trouble code.

Check again if the DTC is set.

(1) Erase the DTC.
(2) Turn the ignition switch to the "ON" position.
(3) Check if the DTC is set.
(4) Turn the ignition switch to the "LOCK" (OFF) position.

Q: Is DTC B1206 set?

YES : Replace SRS-ECU (Refer to P.52B-440).

NO : There is an intermittent malfunction such as poor engaged connector(s) or open circuit (Refer to GROUP 00, How to Cope with Intermittent Malfunction P.00-15).

DTC B1207: Passenger's Air Bag OFF Indicator Light (Short Circuit between Circuit Terminal)

Air Bag OFF Indicator Light Drive Circuit

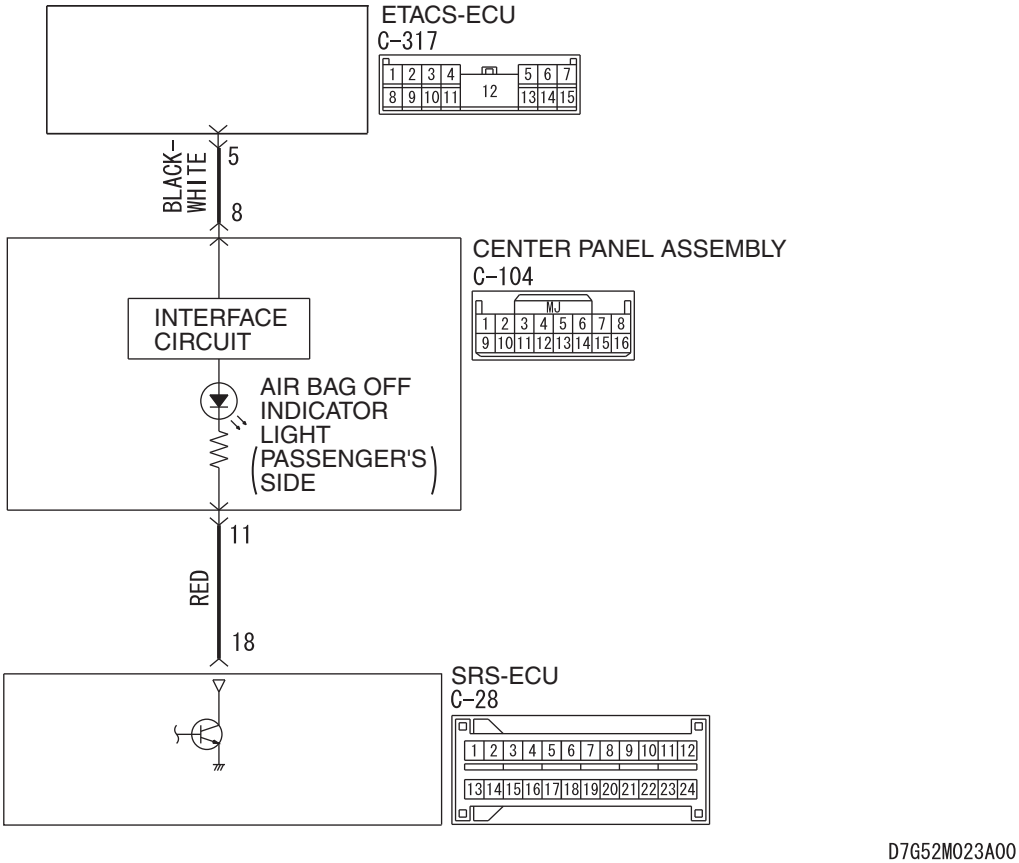

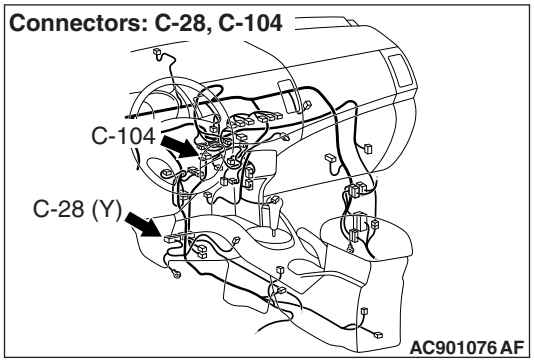

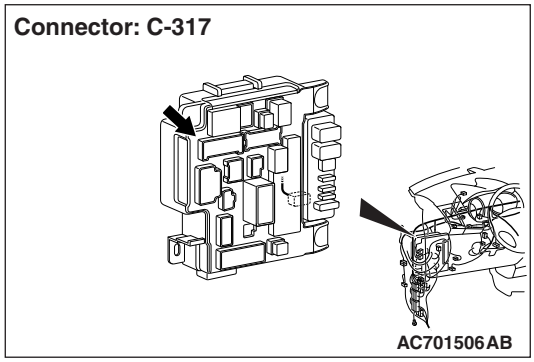

⚠ CAUTION

If DTC B1207 is set in the SRS-ECU, always diagnose the CAN main bus line.

CIRCUIT OPERATION

- Power for the passenger's air bag OFF indicator light is supplied from the fusible link (34).
- The passenger's air bag OFF indicator light illuminates when the ignition switch is turned to the "ON" position and goes out after approximately seven seconds if there is not a malfunction in the SRS system. In the following situations, the indicator will stay on to show that the passenger's (front) air bag is not operational.
  - The occupant is determined to be less than 66 lbs (30 kg) by the occupant classification-ECU.
  - The front passenger's seat is not occupied.

DTC SET CONDITIONS

This DTC will be set if the passenger's air bag OFF indicator light driving circuit is short to ground. If the vehicle condition returns to normal, DTC B1207 will be automatically erased, and the warning light will go out.

TROUBLESHOOTING HINTS

- Damaged wiring harnesses or connectors
- Malfunction of the SRS-ECU
- Malfunction of the passenger's air bag OFF indicator light

DIAGNOSIS

Required Special Tools:

- MB991958: Scan Tool (M.U.T.-III Sub Assembly)
  - MB991824: Vehicle Communication Interface (V.C.I.)
  - MB991827: M.U.T.-III USB Cable
  - MB991910: M.U.T.-III Main Harness A (Vehicles with CAN Communication System)

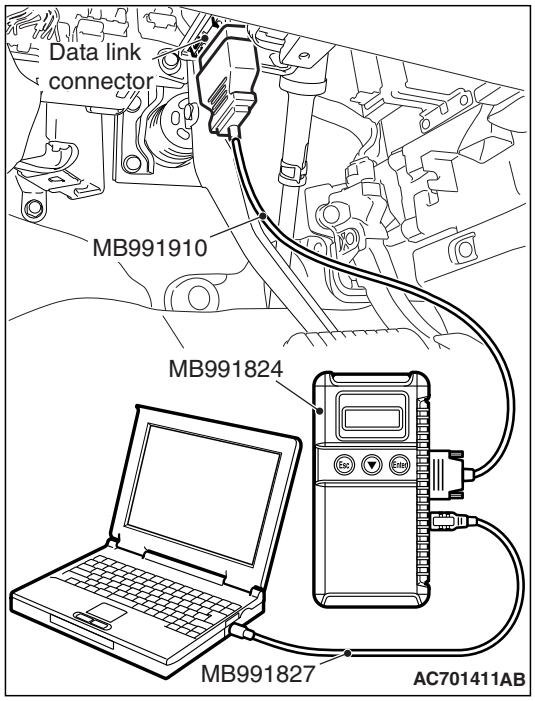

STEP 1. Using scan tool MB991958, diagnose the CAN bus line.

⚠ CAUTION

To prevent damage to scan tool MB991958, always turn the ignition switch to the "LOCK" (OFF) position before connecting or disconnecting scan tool MB991958.

(1) Connect scan tool MB991958. Refer to "How to connect the scan tool P.52B-28."
(2) Turn the ignition switch to the "ON" position.
(3) Diagnose the CAN bus line.
(4) Turn the ignition switch to the "LOCK" (OFF) position.

Q: Is the CAN bus line found to be normal?

YES : Go to Step 2.
NO : Repair the CAN bus line (Refer to GROUP 54C, Diagnosis P.54C-17).

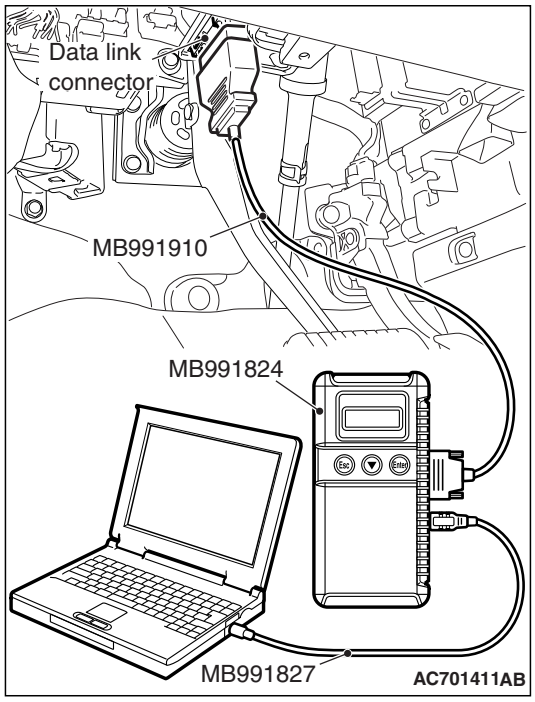

STEP 2. Recheck for diagnostic trouble code.

Check again if the DTC is set.

(1) Erase the DTC.
(2) Turn the ignition switch to the "ON" position.
(3) Check if the DTC is set.
(4) Turn the ignition switch to the "LOCK" (OFF) position.

Q: Is the DTC set?

YES : Go to Step 3.

NO : There is an intermittent malfunction such as poor engaged connector(s) or open circuit (Refer to GROUP 00, How to Cope with Intermittent Malfunction P.00-15).

STEP 3. Check the passenger's air bag OFF indicator light.

(1) It is checked whether the passenger's air bag OFF indicator light is normal (Refer to P.52B-31).

Q: Is the check result normal?

YES : Go to Step 4.

NO : Replace center panel assembly (Refer to GROUP 52A –Instrument Panel Assembly P.52A-2).

STEP 4. Resistance measurement at the C-28 SRS-ECU connector.

(1) Disconnect the negative battery terminal.
(2) While pushing the part "A" indicated in the figure of the harness side connector, turn the lock lever to the direction of the arrow to release the lock lever, and disconnect the C-28 SRS-ECU connector.
(3) Disconnect the center panel assembly connector C-104.

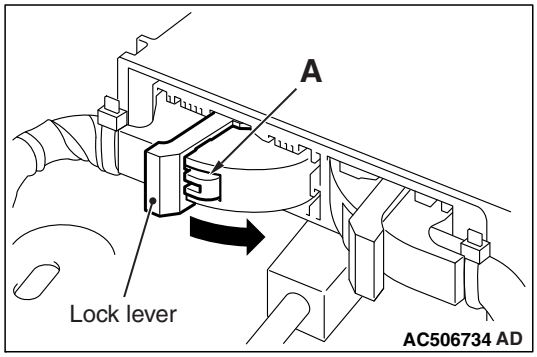

(4) Take the measurements below at the SRS-ECU harness side connector. It should be open circuit.
- Continuity between terminal No.18 and body ground

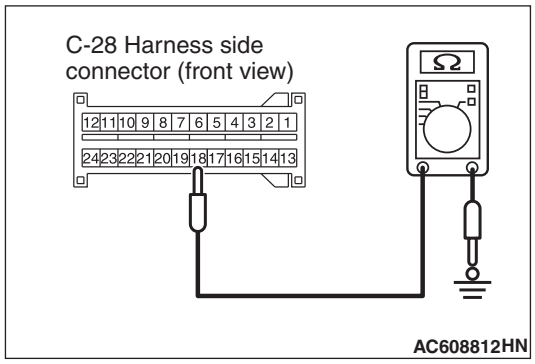

Q: Is it open circuit?

YES : Go to Step 5.
NO : Repair the wiring harness between the C-28 SRS-ECU connector terminal No. 18 and the C-104 center panel assembly connector terminal No.11. Then go to Step 6

STEP 5. Resistance measurement at the C-28 SRS-ECU connector.

(1) Disconnect the negative battery terminal.
(2) While pushing the part "A" indicated in the figure of the harness side connector, turn the lock lever to the direction of the arrow to release the lock lever, and disconnect the C-28 SRS-ECU connector.

⚠ CAUTION

Do not insert a probe into the terminal from its front side directly, as the connector contact pressure may be weakened.

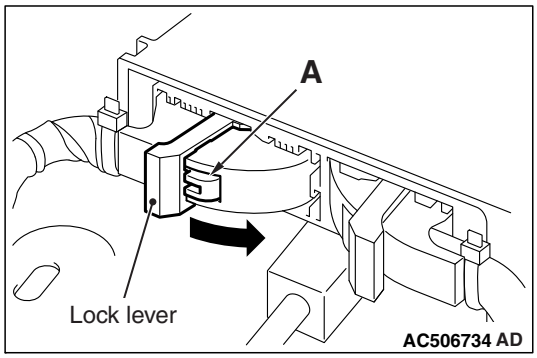

(3) Check for continuity between the C-28 harness side connector terminal No.18 and body ground.
It should be open circuit.

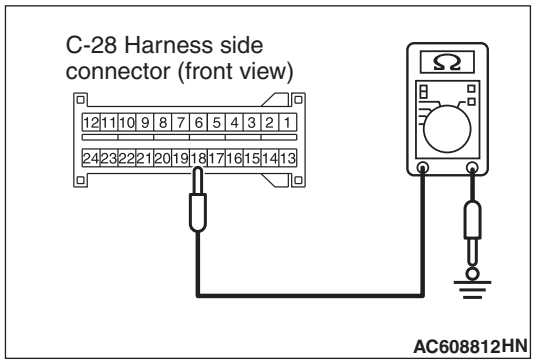

Q: Is it open circuit?

YES : Go to Step 6.
NO : Replace SRS-ECU (Refer to P.52B-440).

STEP 6. Recheck for diagnostic trouble code.

Check again if the DTC is set.
(1) Erase the DTC.
(2) Turn the ignition switch to the "ON" position.
(3) Check if the DTC is set.
(4) Turn the ignition switch to the "LOCK" (OFF) position.

Q: Is DTC B1207 set?

YES : Replace SRS-ECU (Refer to P.52B-440).

NO : There is an intermittent malfunction such as poor engaged connector(s) or open circuit (Refer to GROUP 00, How to Cope with Intermittent Malfunction P.00-15).

DTC B1B00: Driver's Air Bag Module (1st Squib) System (Shorted to Squib Circuit Ground)
DTC B1B04: Driver's Air Bag Module (2nd Squib) System (Shorted to Squib Circuit Ground)

Drivers's Air Bag Module (Squib) Circuit

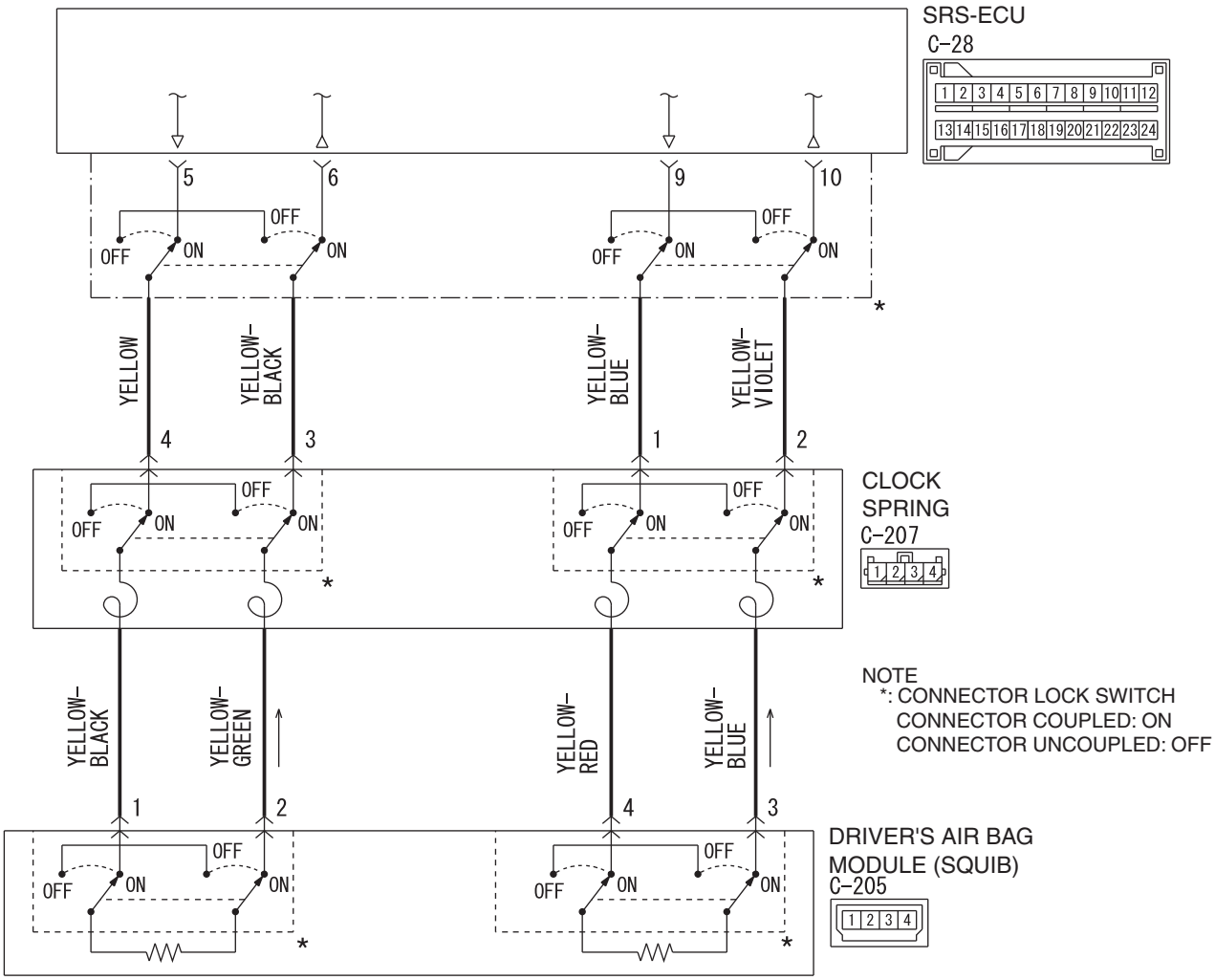

AC701509 AB

TSB Revision

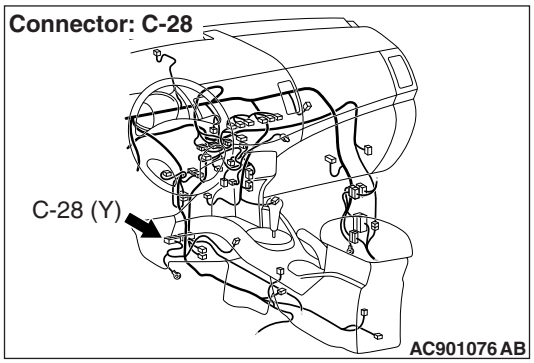

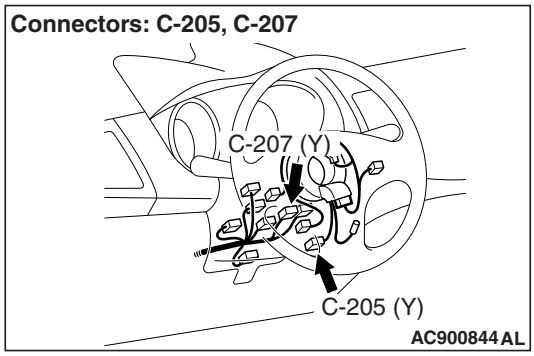

⚠ CAUTION

- **If DTC B1B00 <1st squib> or B1B04 <2nd squib> is set in the SRS-ECU, always diagnose the CAN main bus line.**
- **When DTC B1B00 is set in the following diagnosis, check the 1st squib circuit. When DTC B1B04 is set, check the 2nd squib circuit.**

CIRCUIT OPERATION

- The SRS-ECU judges how severe a collision is by detecting signals from the front impact sensors and the front air bag analog G-sensor. If the impact is over a predetermined level, the SRS-ECU sends an ignition signal. At this time, if the front air bag safing G-sensor is on, the SRS air bag will inflate.
- The ignition signal is sent to the air bag module via the clock spring to inflate the air bag.

DTC SET CONDITIONS

This DTC is set if there is abnormal resistance between the input terminals of the driver's air bag module (squib).

TROUBLESHOOTING HINTS

- Malfunction of the clock spring
- Damaged harness wires and connectors
- Short to the ground in the driver's air bag module (squib) harness
- Malfunction of the SRS-ECU

DIAGNOSIS

Required Special Tools:

- MB991958: Scan Tool (M.U.T.-III Sub Assembly)
  - MB991824: Vehicle Communication Interface (V.C.I.)
  - MB991827: M.U.T.-III USB Cable
  - MB991910: M.U.T.-III Main Harness A (Vehicles with CAN Communication System)
- MB991865: Dummy resistor
- MB991866: Resister harness

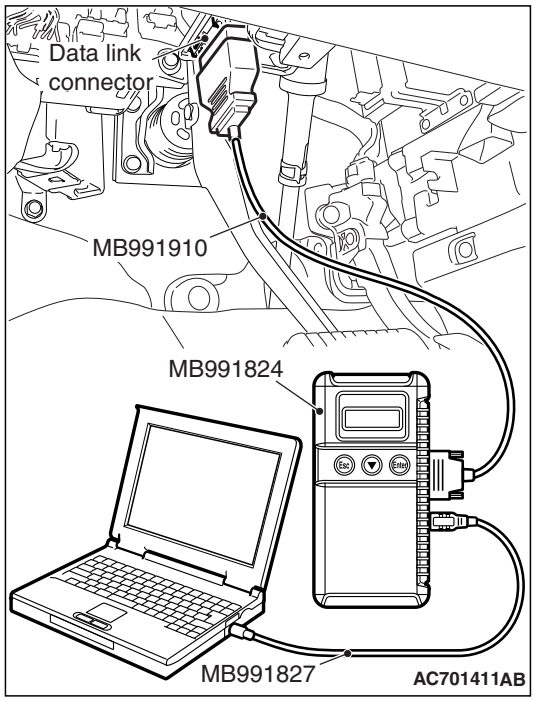

STEP 1. Using scan tool MB991958, diagnose the CAN bus line.

⚠ CAUTION

To prevent damage to scan tool MB991958, always turn the ignition switch to the "LOCK" (OFF) position before connecting or disconnecting scan tool MB991958.

(1) Connect scan tool MB991958. Refer to "How to connect the scan tool P.52B-28."
(2) Turn the ignition switch to the "ON" position.
(3) Diagnose the CAN bus line.
(4) Turn the ignition switch to the "LOCK" (OFF) position.

Q: Is the CAN bus line found to be normal?

YES : Go to Step 2.
NO : Repair the CAN bus line (Refer to GROUP 54C, Diagnosis P.54C-17).

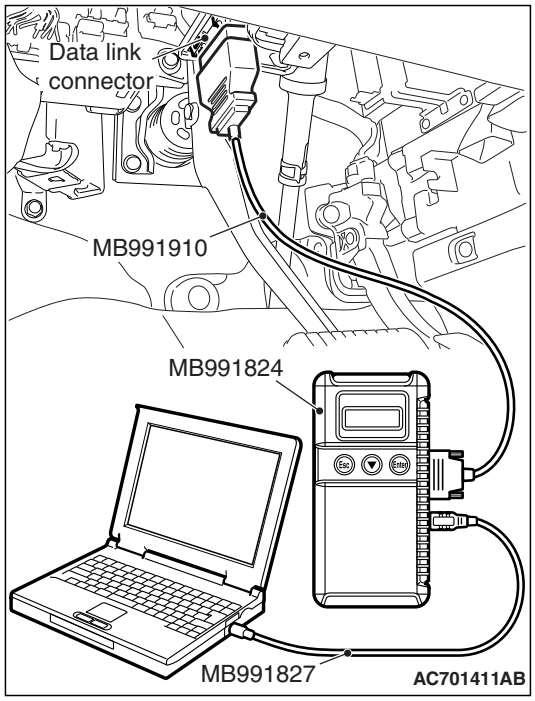

STEP 2. Recheck for diagnostic trouble code.

Check again if the DTC is set.
(1) Erase the DTC.
(2) Turn the ignition switch to the "ON" position.
(3) Check if the DTC is set.
(4) Turn the ignition switch to the "LOCK" (OFF) position.

Q: Is the DTC set?

YES : Go to Step 3.
NO : There is an intermittent malfunction such as poor engaged connector(s) or open circuit (Refer to GROUP 00, How to Cope with Intermittent Malfunction P.00-15).

STEP 3. Check the driver's air bag module. (Using scan tool MB991958, read the diagnostic trouble code.)

(1) Disconnect the negative battery terminal.

(2) Slide the outer housing of the clock spring side of the driver' s air bag module connector C-205 in the arrow direction shown, and disconnect the connector.

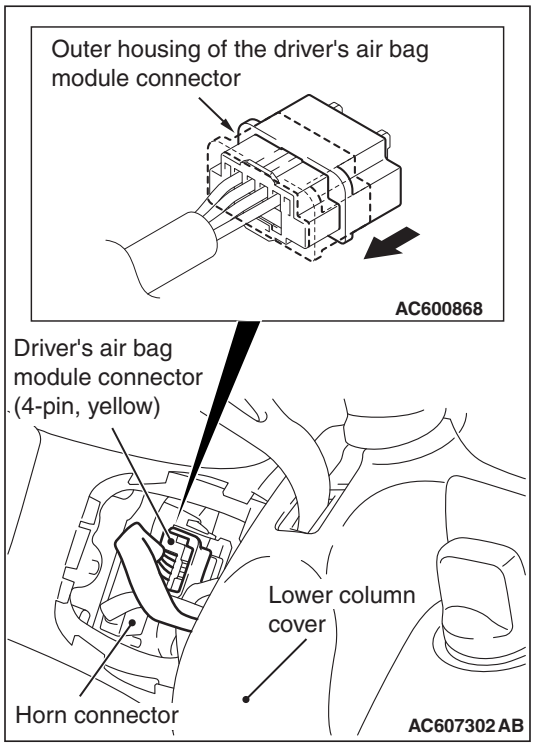

(3) Connect special tool MB991865 to special tool MB991866.

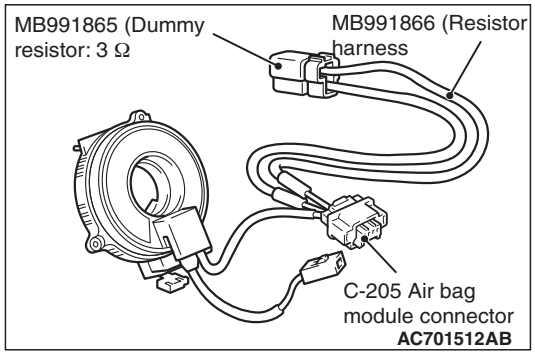

⚠ CAUTION

Do not insert a probe into the terminal from its front side directly, as the connector contact pressure may be weakened.

(4) Insert special tool MB991866 into clock spring side air bag module connector C-205 (terminal No.1 and 2 <1st squib> or terminal No.3 and 4 <2nd squib>) by backprobing.

(5) Connect the negative battery terminal.

⚠ CAUTION

Always DTC B1B06 is set when checking DTC B1B00. This is because the second side terminal is isolated when checking it, DTC B1B06 is set but this is not a fault. In addition, always DTC B1B02 is set when checking DTC B1B04 because the first side terminal is isolated.

(6) Erase the diagnostic trouble code memory, and check the diagnostic trouble code.

Q: Is the checked DTC set?

YES : Go to Step 4.

NO : Replace the driver's air bag module (Refer to P.52B-443). Then go to Step 7.

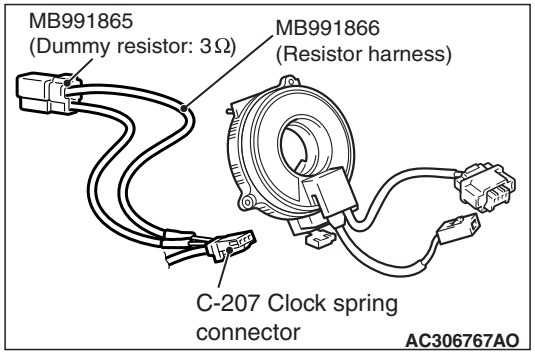

STEP 4. Check the clock spring. (Using scan tool MB991958, read the diagnostic trouble code.)

(1) Disconnect the negative battery terminal.
(2) Disconnect the clock spring connector C-207.
(3) Connect special tool MB991865 to special tool MB991866.

⚠ CAUTION

Do not insert a test probe into the terminal from its front side directly, as the connector contact pressure may be weakened.

(4) Insert special tool MB991866 into clock spring harness side connector C-207 (terminal No. 3 and 4 <1st squib> or terminal No. 1 and 2 <2nd squib>) by backprobing.
(5) Connect the negative battery terminal.

⚠ CAUTION

Always DTC B1B06 is set when checking DTC B1B00. This is because the second side terminal is isolated when checking it, DTC B1B06 is set but this is not a fault. In addition, always DTC B1B02 is set when checking DTC B1B04 because the first side terminal is isolated.

(6) Erase the diagnostic trouble code memory, and check the diagnostic trouble code.

Q: Is the checked DTC set?

YES : Go to Step 5.
NO : Replace the clock spring. (Refer to P.52B-443). Then go to Step 7.

STEP 5. Check the driver's air bag module circuit. Measure the resistance at the SRS-ECU connector C-28.

(1) While pushing the part "A" indicated in the figure of the harness side connector, turn the lock lever to the direction of the arrow to release the lock lever, and disconnect the C-28 SRS-ECU connector.

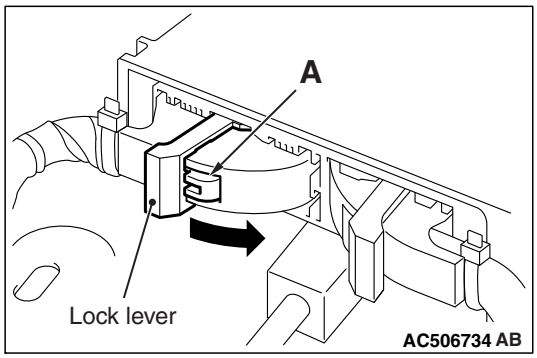

⚠ DANGER

To prevent the air bag from deploying unintentionally, disconnect the clock spring connector C-207 to short the squib circuit.

(2) Disconnect the clock spring connector C-207.

⚠ CAUTION

Insert an insulator such as a cable tie to a depth of 4mm (0.16 inch) or more, otherwise the short spring will not be released.

(3) Insert a cable tie [3 mm (0.12 inch) wide, 0.5 mm (0.02 inch) thick] between terminals 5, 6 <1st squib> or 9, 10 <2nd squib> and the short spring to release the short spring.

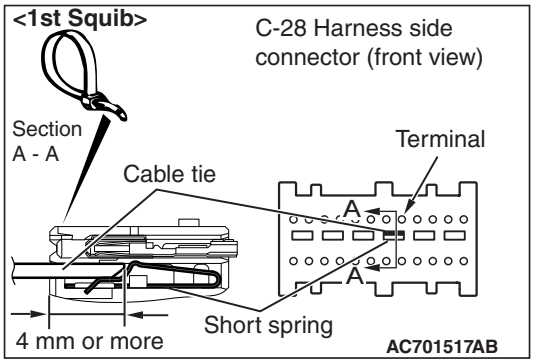

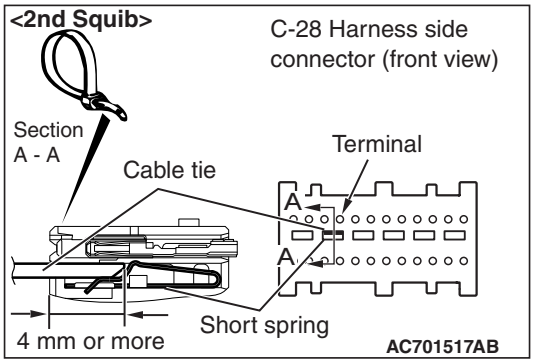

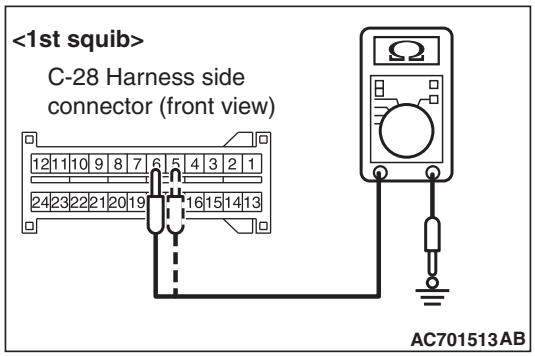

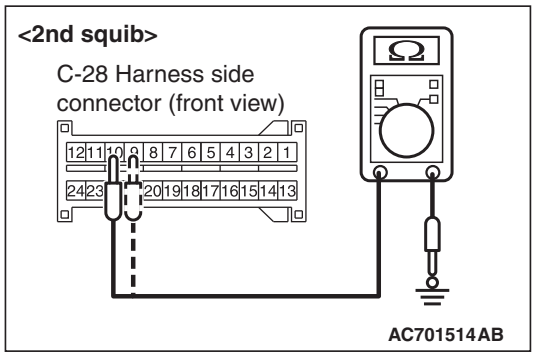

(4) Check for continuity between C-28 harness side connector terminals 5 and 6 <1st squib> or 9 and 10 <2nd squib> and body ground.
It should be open circuit.

Q: Is it open circuit?

YES : Erase the diagnostic trouble code memory, and check the diagnostic trouble code. If DTC B1B00 <1st squib> or B1B04 <2nd squib> sets, replace the SRS-ECU (Refer to P.52B-440). Go to Step 7.

NO : Go to Step 6.

STEP 6. Check the harness for short circuit to ground between the following connector.

- SRS-ECU connector C-28 (terminal No.5 and 6) and clock spring connector C-207 (terminal No.4 and 3) <1st squib>.
- SRS-ECU connector C-28 (terminal No.9 and 10) and clock spring connector C-207 (terminal No.1 and 2) <2nd squib>.

Q: Is the check result normal?

YES : Go to Step 7.

NO : Repair the harness wires between SRS-ECU connector C-28 and clock spring connector C-207. Then go to Step 7.

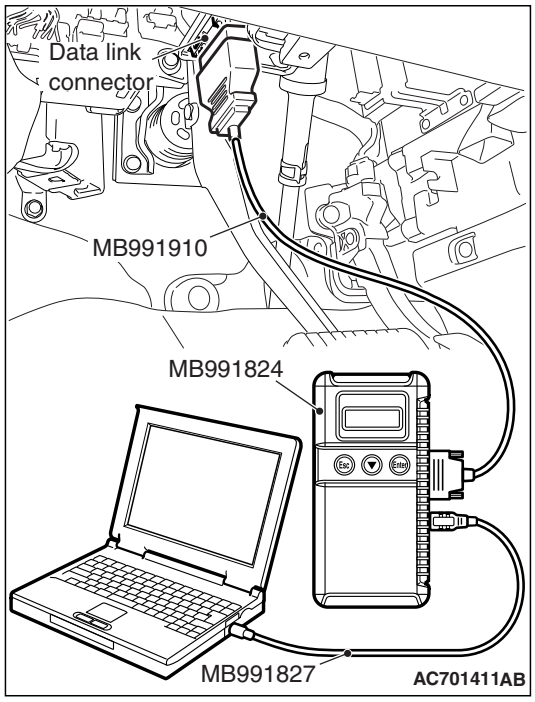

STEP 7. Recheck for diagnostic trouble code.

Check again if the DTC is set.

(1) Erase the DTC.
(2) Turn the ignition switch to the "ON" position.
(3) Check if the DTC is set.
(4) Turn the ignition switch to the "LOCK" (OFF) position.

Q: Is DTC B1B00 <1st squib> or B1B04 <2nd squib> set?

YES : Return to Step 1.
NO : The procedure is complete.

DTC B1B01: Driver's Air bag Module (1st squib) System (Shorted to Squib Circuit Power Supply)
DTC B1B05: Driver's Air bag Module (2nd squib) System (Shorted to Squib Circuit Power Supply

Drivers's Air Bag Module (Squib) Circuit

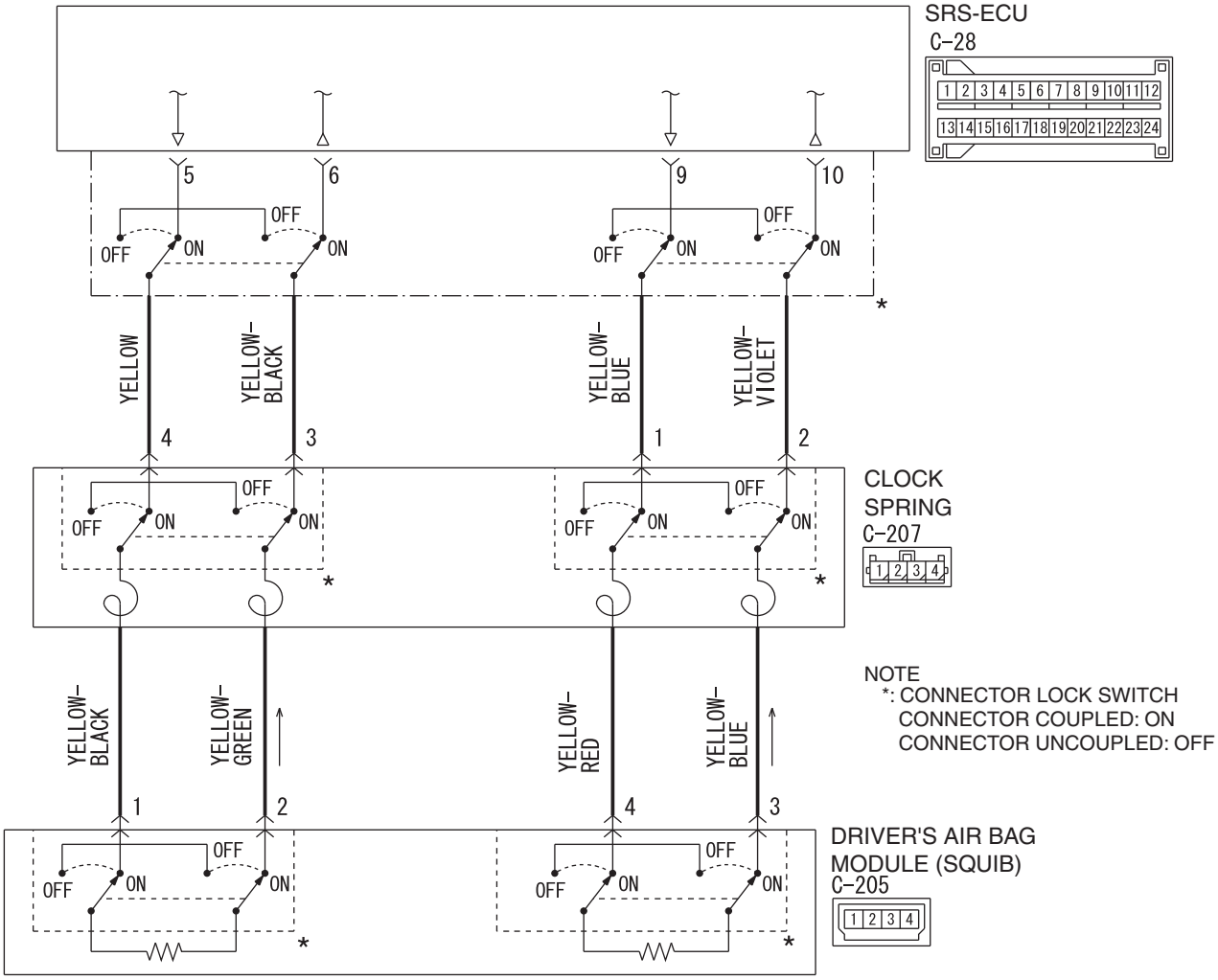

AC701509AB

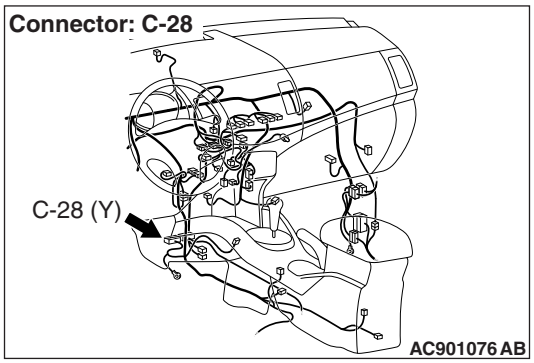

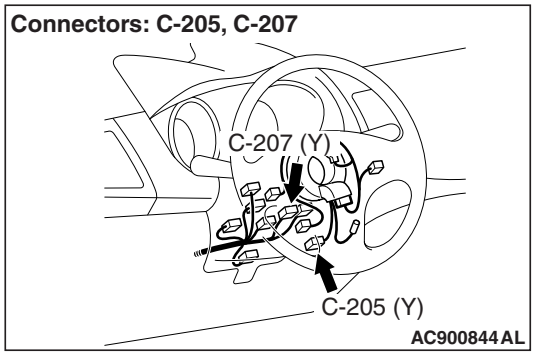

⚠ CAUTION

- **If DTC B1B01 <1st squib> or B1B05 <2nd squib> is set in the SRS-ECU, always diagnose the CAN main bus line.**
- **When DTC B1B01 is set in the following diagnosis, check the 1st squib circuit. When DTC B1B05 is set, check the 2nd squib circuit.**

CIRCUIT OPERATION

- The SRS-ECU judges how severe a collision is by detecting signals from the front impact sensors and the front air bag analog G-sensor. If the impact is over a predetermined level, the SRS-ECU sends an ignition signal. At this time, if the front air bag safing G-sensor is on, the SRS air bag will inflate.
- The ignition signal is input to the air bag module via the clock spring to inflate the air bag.

DTC SET CONDITIONS

This DTC is set if there is abnormal resistance between the input terminals of the driver's air bag module (squib).

TROUBLESHOOTING HINTS

- Malfunction of the clock spring
- Damaged harness wires and connectors
- Short to the power supply in the driver's air bag module (squib) harness
- Malfunction of the SRS-ECU

DIAGNOSIS

Required Special Tools:

- MB991958: Scan Tool (M.U.T.-III Sub Assembly)
  - MB991824: Vehicle Communication Interface (V.C.I.)
  - MB991827: M.U.T.-III USB Cable
  - MB991910: M.U.T.-III Main Harness A (Vehicles with CAN Communication System)
- MB991865: Dummy resistor
- MB991866: Resister harness

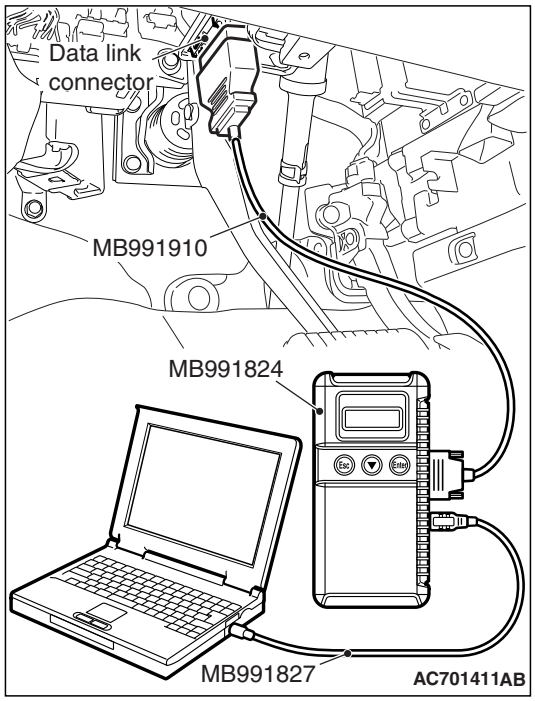

STEP 1. Using scan tool MB991958, diagnose the CAN bus line.

⚠ CAUTION

To prevent damage to scan tool MB991958, always turn the ignition switch to the "LOCK" (OFF) position before connecting or disconnecting scan tool MB991958.

(1) Connect scan tool MB991958. Refer to "How to connect the scan tool P.52B-28."
(2) Turn the ignition switch to the "ON" position.
(3) Diagnose the CAN bus line.
(4) Turn the ignition switch to the "LOCK" (OFF) position.

Q: Is the CAN bus line found to be normal?

YES : Go to Step 2.
NO : Repair the CAN bus line (Refer to GROUP 54C, Diagnosis P.54C-17).

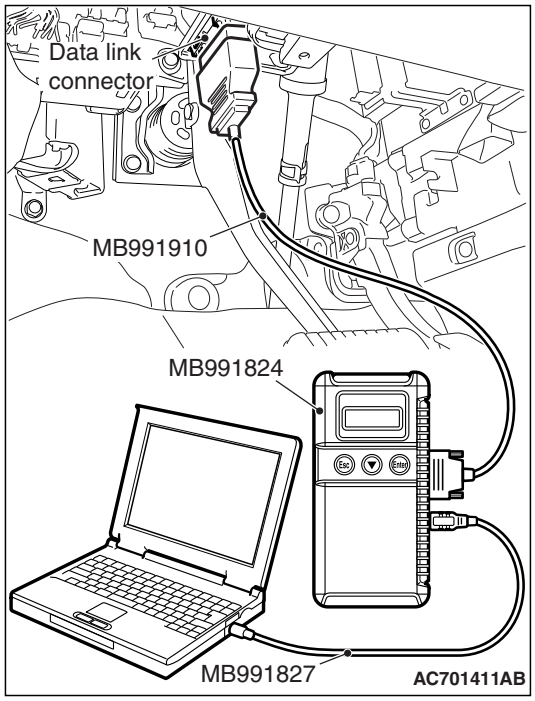

STEP 2. Recheck for diagnostic trouble code.

Check again if the DTC is set.
(1) Erase the DTC.
(2) Turn the ignition switch to the "ON" position.
(3) Check if the DTC is set.
(4) Turn the ignition switch to the "LOCK" (OFF) position.

Q: Is the DTC set?

YES : Go to Step 3.
NO : There is an intermittent malfunction such as poor engaged connector(s) or open circuit (Refer to GROUP 00, How to Cope with Intermittent Malfunction P.00-15).

STEP 3. Check the driver's air bag module. (Using scan tool MB991958, read the diagnostic trouble code.)

(1) Disconnect the negative battery terminal.

(2) Slide the outer housing of the clock spring side of the driver's air bag module connector C-205 in the arrow direction shown, and disconnect the connector.

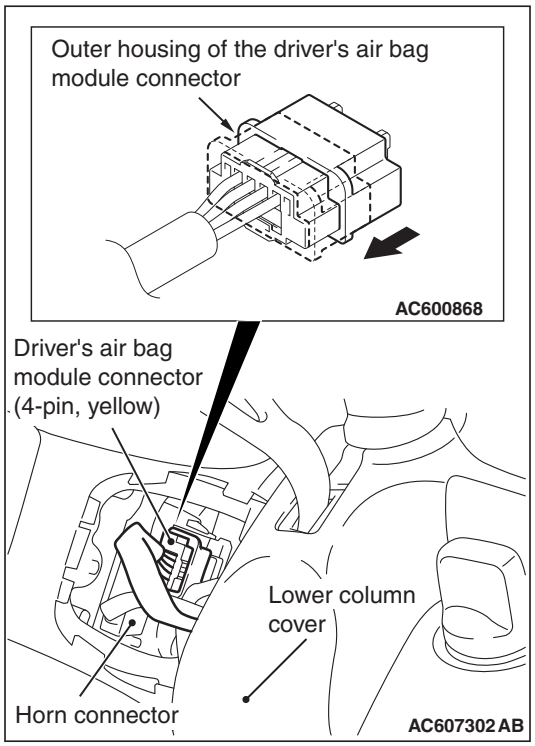

(3) Connect special tool MB991865 to special tool MB991866.

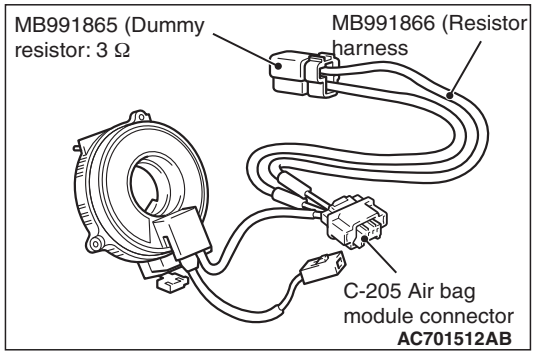

⚠ CAUTION

Do not insert a probe into the terminal from its front side directly, as the connector contact pressure may be weakened.

(4) Insert special tool MB991866 into clock spring side air bag module connector C-205 (terminal No.1 and 2 <1st squib> or terminal No.3 and 4 <2nd squib>) by backprobing.

(5) Connect the negative battery terminal.

⚠ CAUTION

Always DTC B1B06 is set when checking DTC B1B01. This is because the second side terminal is isolated when checking it. DTC B1B06 is set but this is not a fault. In addition, always DTC B1B02 is set when checking DTC B1B05 because the first side terminal is isolated.

(6) Erase the diagnostic trouble code memory, and check the diagnostic trouble code.

Q: Is the checked DTC set?

YES : Go to Step 4.

NO : Replace the driver's air bag module. (Refer to P.52B-443). Then go to Step 7.

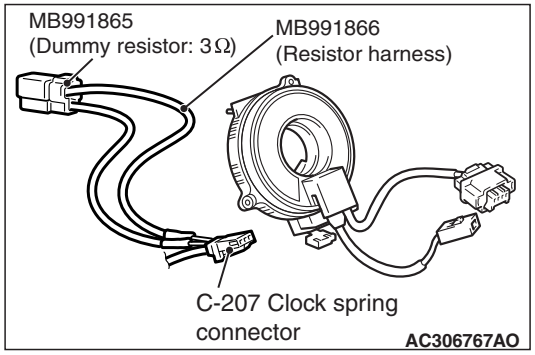

STEP 4. Check the clock spring. (Using scan tool MB991958, read the diagnostic trouble code.)

(1) Disconnect the negative battery terminal.
(2) Disconnect the clock spring connector C-207.
(3) Connect special tool MB991865 to special tool MB991866.

⚠ CAUTION

Do not insert a test probe into the terminal from its front side directly, as the connector contact pressure may be weakened.

(4) Insert special tool MB991866 into clock spring harness side connector C-207 (terminal No.3 and 4 <1st squib> or terminal No. 2 and 1 <2nd squib>) by backprobing.
(5) Connect the negative battery terminal.

⚠ CAUTION

Always DTC B1B06 is set when checking DTC B1B01. This is because the second side terminal is isolated when checking it. DTC B1B06 is set but this is not a fault. In addition, always DTC B1B02 is set when checking DTC B1B05 because the first side terminal is isolated.

(6) Erase the diagnostic trouble code memory, and check the diagnostic trouble code.

Q: Is the checked DTC set?

YES : Go to Step 5.
NO : Replace the clock spring (Refer to P.52B-443). Then go to Step 7.

STEP 5. Check the driver's air bag module circuit. Measure the voltage at the SRS-ECU connector C-28.

(1) Disconnect the negative battery terminal.

(2) While pushing the part "A" indicated in the figure of the harness side connector, turn the lock lever to the direction of the arrow to release the lock lever, and disconnect the C-28 SRS-ECU connector.

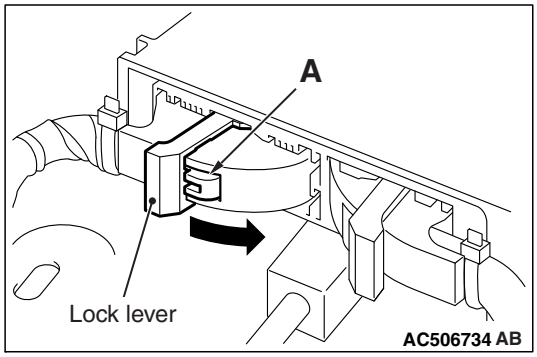

⚠ ***DANGER***

To prevent the air bag from deploying unintentionally, disconnect the clock spring connector C-207 to short the squib circuit.

(3) Disconnect the clock spring connector C-207.

⚠ **CAUTION**

Insert an insulator such as a cable tie to a depth of 4mm (0.16 inch) or more, otherwise the short spring will not be released.

(4) Insert a cable tie [3 mm (0.12 inch) wide, 0.5 mm (0.02 inch) thick] between terminals 5, 6 <1st squib> or 9, 10 <2nd squib> and the short spring to release the short spring.

(5) Connect the negative battery terminal.

(6) Ignition switch: ON.

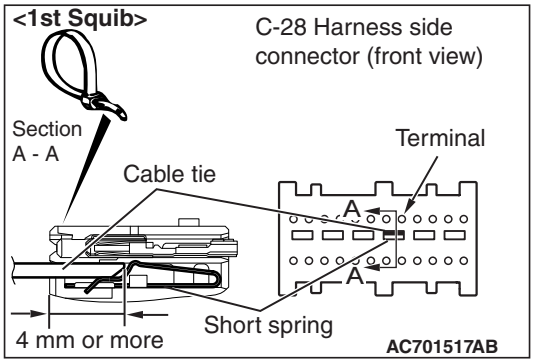

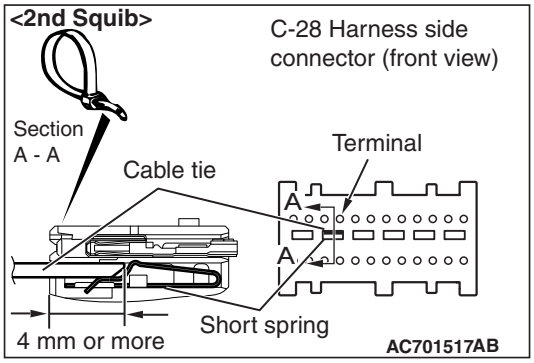

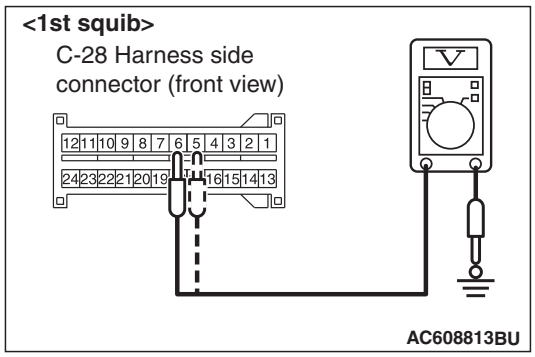

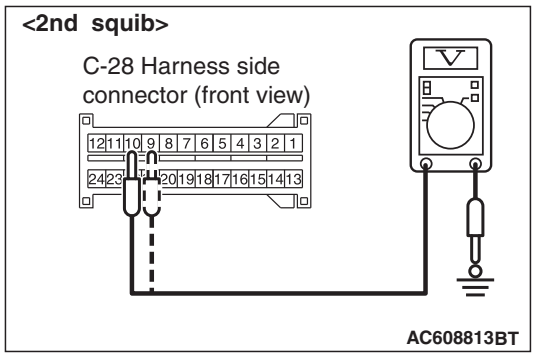

(7) Measure the voltage between C-28 harness side connector terminals 5 and 6 <1st squib> or 9 and 10 <2nd squib> and body ground.
Voltage should measure 1 volt or less.

Q: Is the measured voltage within the specified range?

YES : Erase the diagnostic trouble code memory, and check the diagnostic trouble code. If DTC B1B01 <1st squib> or B1B05 <2nd squib> sets, replace the SRS-ECU. (Refer to P.52B-440). Then go to Step 7.

NO : Go to Step 6.

STEP 6. Check the harness for short circuit to power supply between the following connector.

- SRS-ECU connector C-28 (terminal No.5 and 6) and clock spring connector C-207 (terminal No.4 and 3) <1st squib>.
- SRS-ECU connector C-28 (terminal No.9 and 10) and clock spring connector C-207 (terminal No.1 and 2) <2nd squib>.

Q: Is the check result normal?

YES : Go to Step 7.

NO : Repair the harness wires between SRS-ECU connector C-28 and clock spring connector C-207. Then go to Step 7.

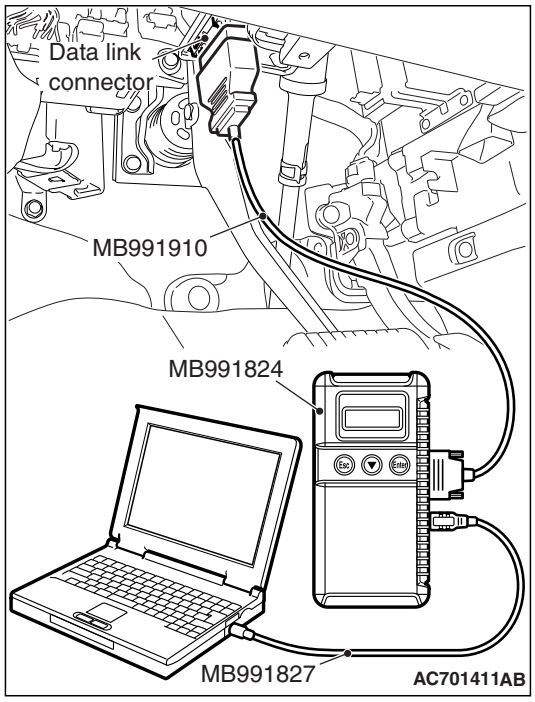

STEP 7. Recheck for diagnostic trouble code.

Check again if the DTC is set.

(1) Erase the DTC.
(2) Turn the ignition switch to the "ON" position.
(3) Check if the DTC is set.
(4) Turn the ignition switch to the "LOCK" (OFF) position.

Q: Is DTC B1B01 <1st squib> or B1B05 <2nd squib> set?

YES : Return to Step 1.
NO : The procedure is complete.

DTC B1B02: Driver's Air Bag Module (1st squib) System (Squib Circuit Open)
DTC B1B06: Driver's Air Bag Module (2nd squib) System (Squib Circuit Open)

Drivers's Air Bag Module (Squib) Circuit

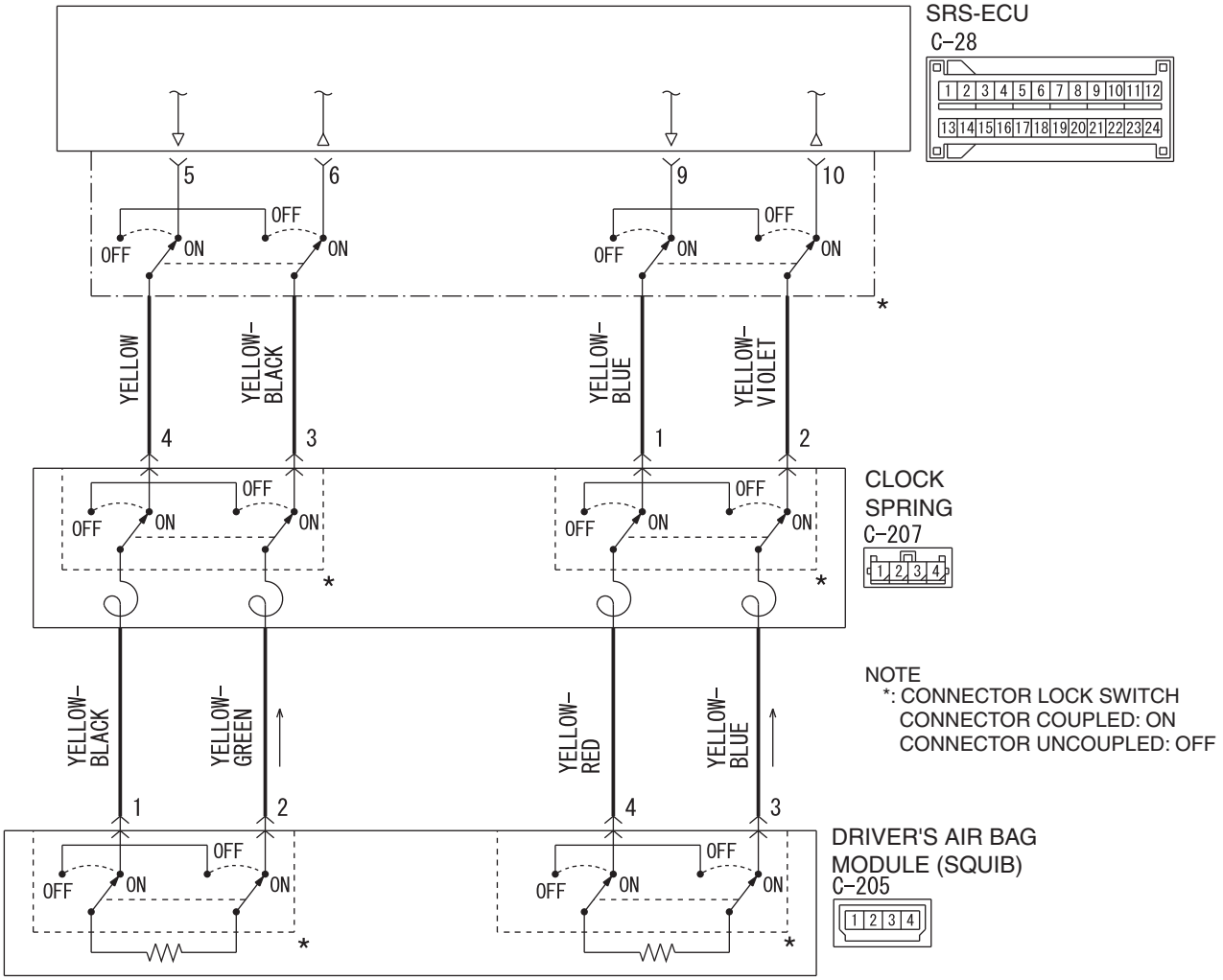

AC701509 AB

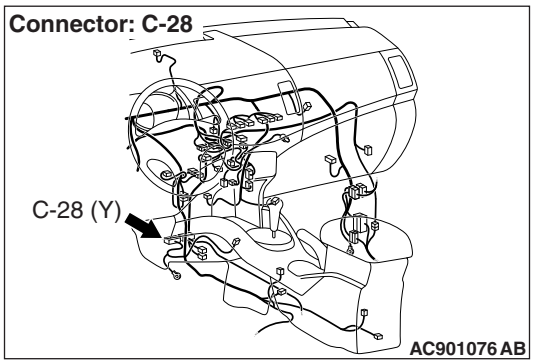

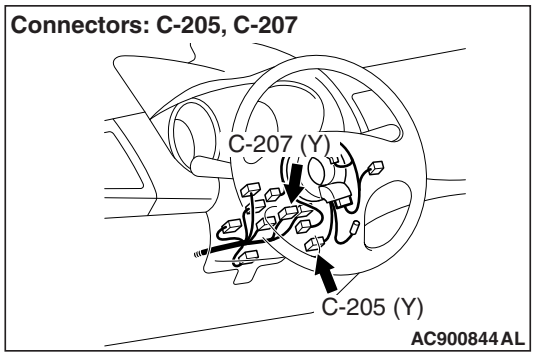

⚠ **CAUTION**

- **If DTC B1B02 <1st squib> or B1B06 <2nd squib> is set in the SRS-ECU, always diagnose the CAN main bus line.**
- **When DTC B1B02 is set in the following diagnosis, check the 1st squib circuit. When DTC B1B06 is set, check the 2nd squib circuit.**

CIRCUIT OPERATION

- The SRS-ECU judges how severe a collision is by detecting signals from the front impact sensors and the front air bag analog G-sensor. If the impact is over a predetermined level, the SRS-ECU sends an ignition signal. At this time, if the front air bag safing G-sensor is on, the SRS air bag will inflate.
- The ignition signal is input to the air bag module via the clock spring to inflate the air bag.

DTC SET CONDITIONS

- This DTC is set if there is abnormal resistance between the input terminals of the driver's air bag module (squib). The most likely causes for this code to be set are the followings:
  - Open circuit in the driver's air bag module (squib) or harness
  - Open circuit in the clock spring
  - Malfunction of connector contact

TROUBLESHOOTING HINTS

- Open circuit in the clock spring
- Open circuit due to improper neutral position of the clock spring
- Open circuit in the driver's air bag module (squib) circuit
- Disengaged driver's air bag module (squib) connector
- Improper connector contact
- Malfunction of the SRS-ECU

DIAGNOSIS

Required Special Tools:

- MB991958: Scan Tool (M.U.T.-III Sub Assembly)
  - MB991824: Vehicle Communication Interface (V.C.I.)
  - MB991827: M.U.T.-III USB Cable
  - MB991910: M.U.T.-III Main Harness A (Vehicles with CAN Communication System)
- MB991865: Dummy resistor
- MB991866: Resister harness

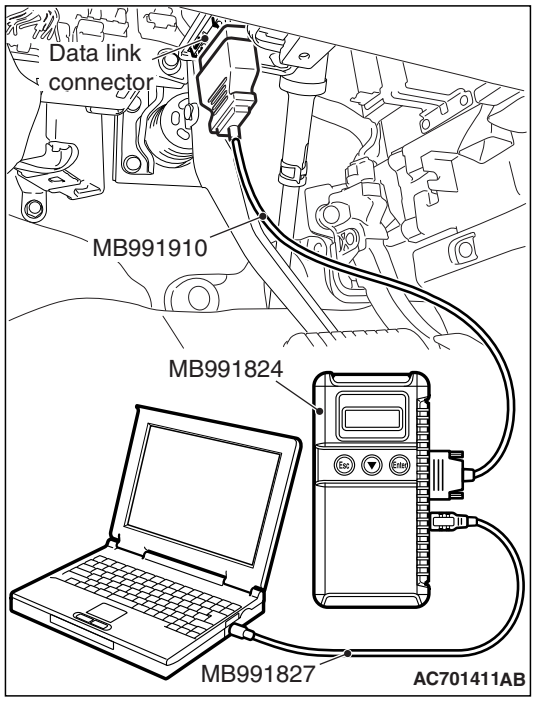

STEP 1. Using scan tool MB991958, diagnose the CAN bus line.

⚠ CAUTION

To prevent damage to scan tool MB991958, always turn the ignition switch to the "LOCK" (OFF) position before connecting or disconnecting scan tool MB991958.

(1) Connect scan tool MB991958. Refer to "How to connect the scan tool P.52B-28."
(2) Turn the ignition switch to the "ON" position.
(3) Diagnose the CAN bus line.
(4) Turn the ignition switch to the "LOCK" (OFF) position.

Q: Is the CAN bus line found to be normal?

YES : Go to Step 2.
NO : Repair the CAN bus line (Refer to GROUP 54C, Diagnosis P.54C-17).

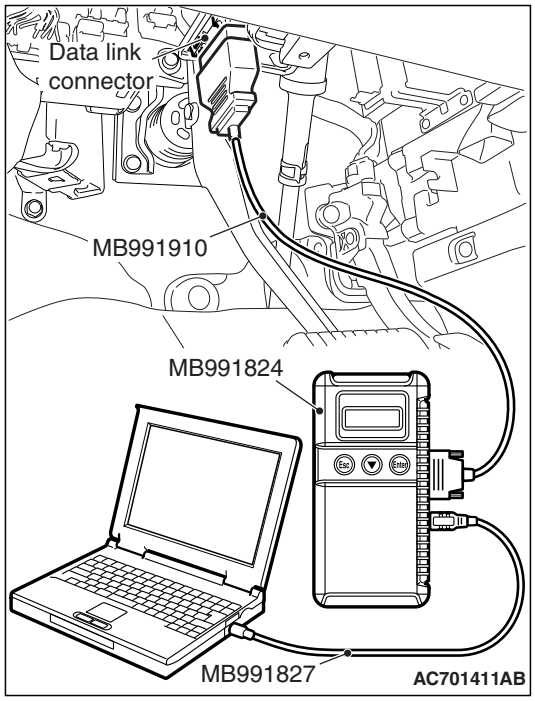

STEP 2. Recheck for diagnostic trouble code.

Check again if the DTC is set.
(1) Erase the DTC.
(2) Turn the ignition switch to the "ON" position.
(3) Check if the DTC is set.
(4) Turn the ignition switch to the "LOCK" (OFF) position.

Q: Is the DTC set?

YES : Go to Step 3.
NO : There is an intermittent malfunction such as poor engaged connector(s) or open circuit (Refer to GROUP 00, How to Cope with Intermittent Malfunction P.00-15).

STEP 3. Check the driver's air bag module. (Using scan tool MB991958, read the diagnostic trouble code.)

(1) Disconnect the negative battery terminal.

(2) Slide the outer housing of the clock spring side of the driver' s air bag module connector C-205 in the arrow direction shown, and disconnect the connector.

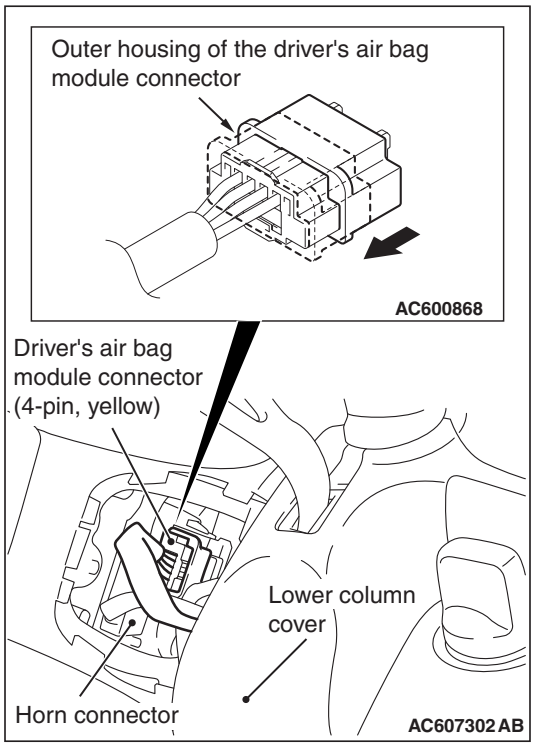

(3) Connect special tool MB991865 to special tool MB991866.

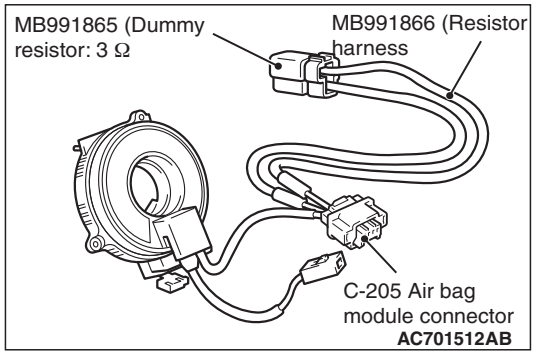

⚠ CAUTION

Do not insert a test probe into the terminal from its front side directly, as the connector contact pressure may be weakened.

(4) Insert special tool MB991866 into clock spring side of driver's air bag module connector C-205 (terminal No.1 and 2 <1st squib> or terminal No.3 and 4 <2nd squib>) by backprobing.

(5) Connect the negative battery terminal.

⚠ CAUTION

Always DTC B1B06 is set when checking DTC B1B02. This is because the second side terminal is isolated when checking it. DTC B1B06 is set but this is not a fault. In addition, always DTC B1B02 is set when checking DTC B1B06 because the first side terminal is isolated.

(6) Erase the diagnostic trouble code memory, and check the diagnostic trouble code.

Q: Is the checked DTC set?

YES : Go to Step 4.

NO : Replace the driver's air bag module. (Refer to P.52B-443). Then go to Step 6.

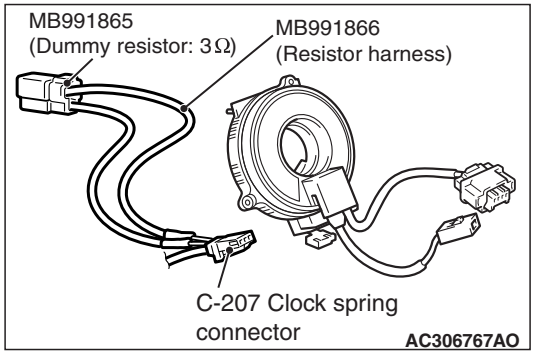

STEP 4. Check the clock spring. (Using scan tool MB991958, read the diagnostic trouble code.)

(1) Disconnect the negative battery terminal.
(2) Disconnect the clock spring connector C-207.
(3) Connect special tool MB991865 to special tool MB991866.

⚠ CAUTION

Do not insert a probe into the terminal from its front side directly, as the connector contact pressure may be weakened.

(4) Insert special tool MB991866 into harness side of clock spring connector C-207 (terminal No.3 and 4 <1st squib> or terminal No.1 and 2 <2nd squib>) by backprobing.
(5) Connect the negative battery terminal.

⚠ CAUTION

Always DTC B1B06 is set when checking DTC B1B02. This is because the second side terminal is isolated when checking it. DTC B1B06 is set but this is not a fault. In addition, always DTC B1B02 is set when checking DTC B1B06 because the first side terminal is isolated.

(6) Erase the diagnostic trouble code memory, and check the diagnostic trouble code.

Q: Is the checked DTC set?

YES : Go to Step 5.
NO : Replace the clock spring. (Refer to P.52B-443). Then go to Step 6.

STEP 5. Check the harness for open circuit between the SRS-ECU connector C-28 and the clock spring connector C-207.

(1) Disconnect the negative battery terminal.

(2) While pushing the part "A" indicated in the figure of the harness side connector, turn the lock lever to the direction of the arrow to release the lock lever, and disconnect the C-28 SRS-ECU connector.

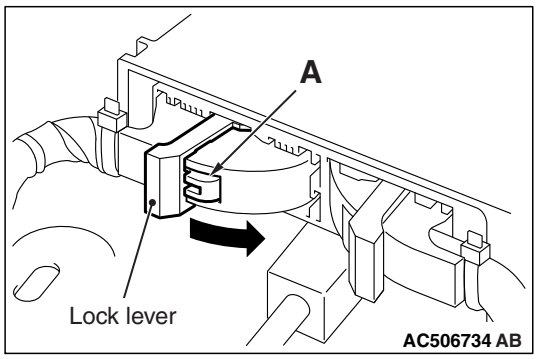

⚠ ***DANGER***

To prevent the air bag from deploying unintentionally, disconnect the clock spring connector C-207 to short the squib circuit.

(3) Disconnect the clock spring connector C-207.

⚠ **CAUTION**

Insert an insulator such as a cable tie to a depth of 4mm (0.16 inch) or more, otherwise the short spring will not be released.

(4) Insert a cable tie [3 mm (0.12 inch) wide, 0.5 mm (0.02 inch) thick] between terminals 5, 6 <1st squib> or 9, 10 <2nd squib> and the short spring to release the short spring.

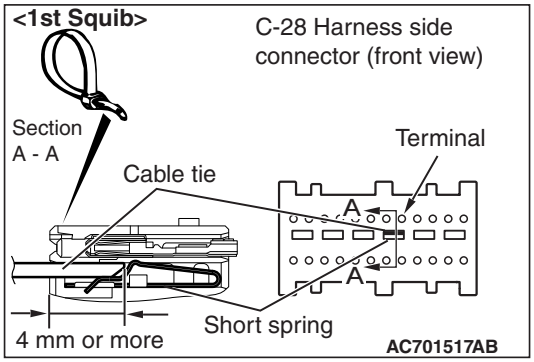

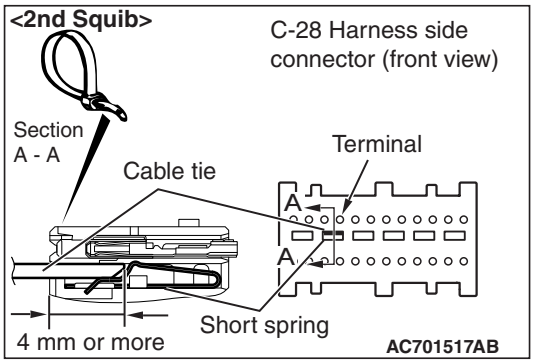

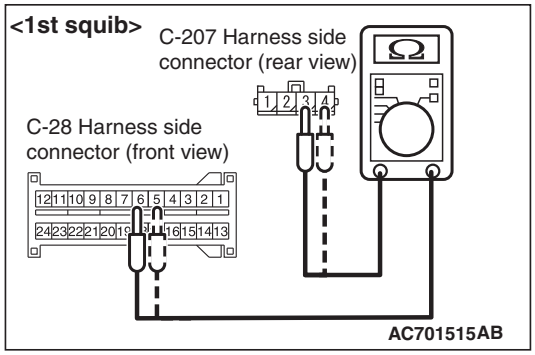

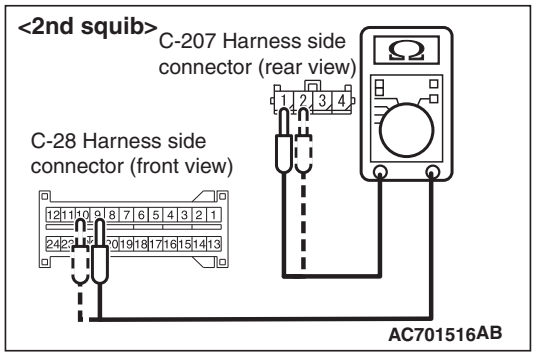

⚠ CAUTION

Do not insert a probe into the terminal from C-207 harness side connector front side directly, as the connector contact pressure may be weakened.

(5) Check for continuity between the following terminals. It should be less than 2 ohms.

<1st squib>
- SRS-ECU connector C-28 (terminal No.5) and the clock spring connector C-207 (terminal No.4)
- SRS-ECU connector C-28 (terminal No.6) and the clock spring connector C-207 (terminal No.3)

<2nd squib>
- SRS-ECU connector C-28 (terminal No.9) and the clock spring connector C-207 (terminal No.1)
- SRS-ECU connector C-28 (terminal No.10) and the clock spring connector C-207 (terminal No.2)

Q: Does continuity exist?

YES : Erase the diagnostic trouble code memory, and check the diagnostic trouble code. If DTC B1B02 <1st squib> or B1B06 <2nd squib> set, replace the SRS-ECU. (Refer to P.52B-440). Then go to Step 6.

NO : Repair the harness wires between SRS-ECU connector C-28 and clock spring connector C-207. Then go to Step 6.

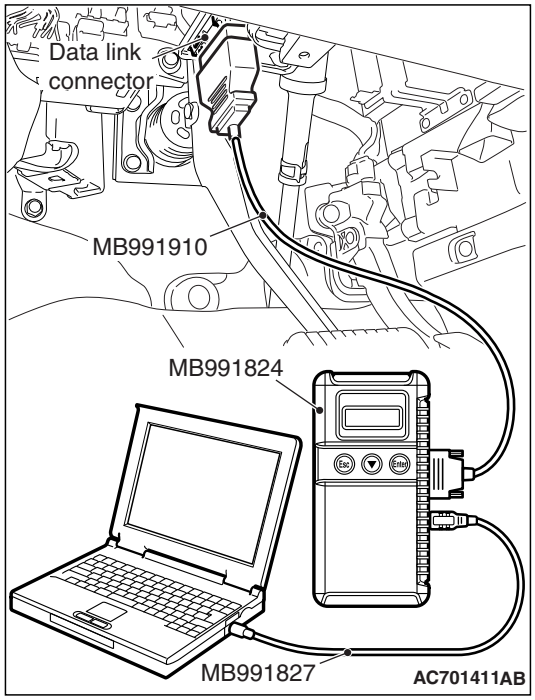

STEP 6. Recheck for diagnostic trouble code.

Check again if the DTC is set.

(1) Erase the DTC.
(2) Turn the ignition switch to the "ON" position.
(3) Check if the DTC is set.
(4) Turn the ignition switch to the "LOCK" (OFF) position.

Q: Is DTC B1B02 <1st squib> or B1B06 <2nd squib> set?

YES : Return to Step 1.

NO : The procedure is complete.

DTC B1B03: Driver's Air Bag Module (1st squib) System (Short Circuit Between Squib Circuit Terminals)
DTC B1B07: Driver's Air Bag Module (2nd squib) System (Short Circuit Between Squib Circuit Terminals)

Drivers's Air Bag Module (Squib) Circuit

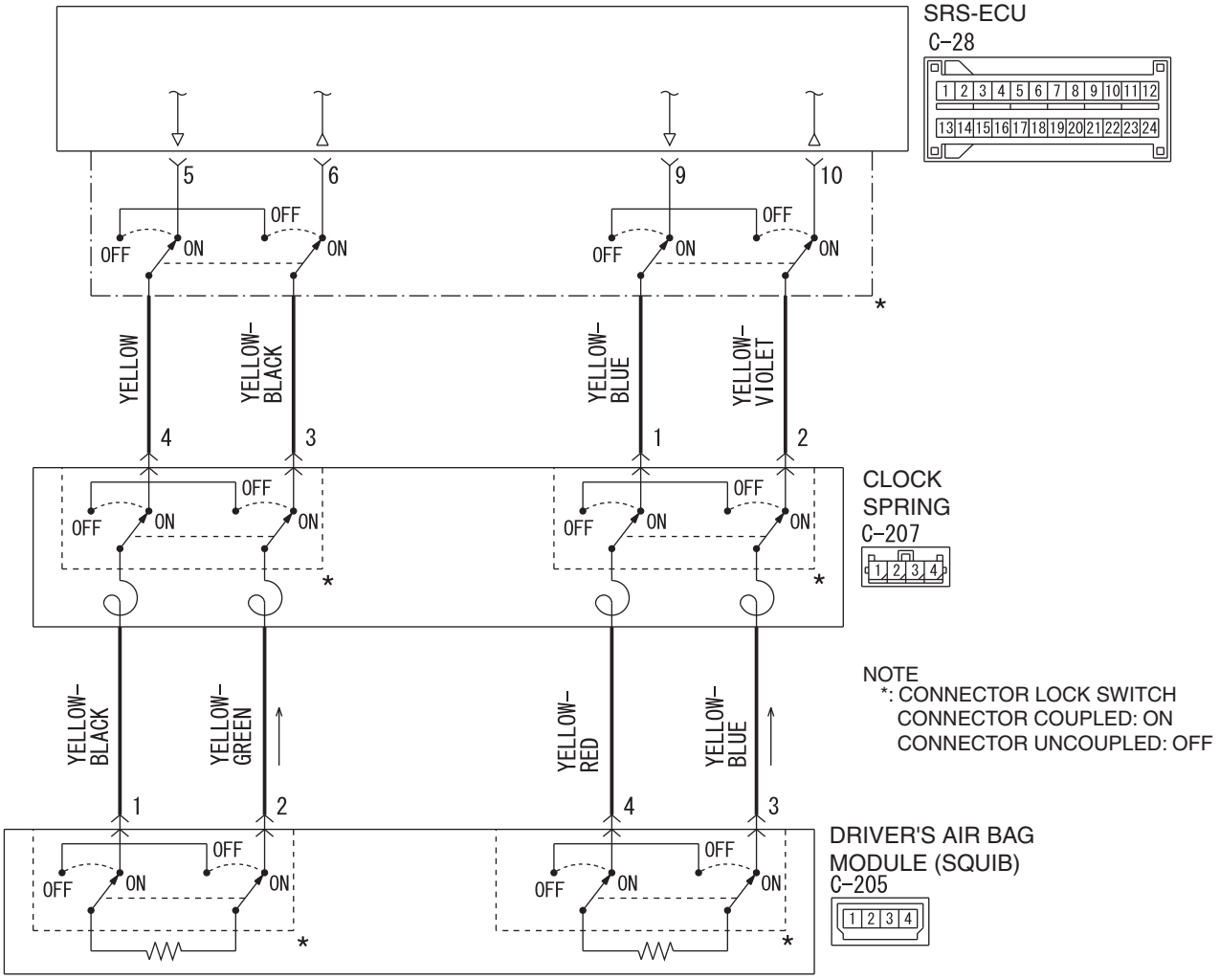

AC701509 AB

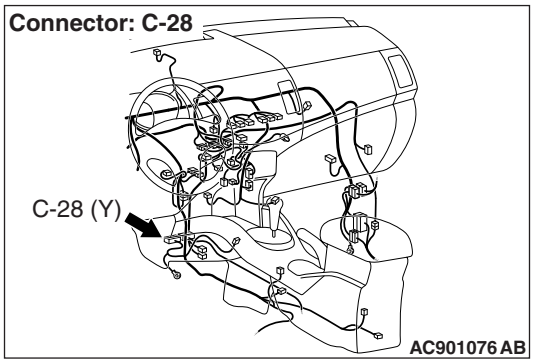

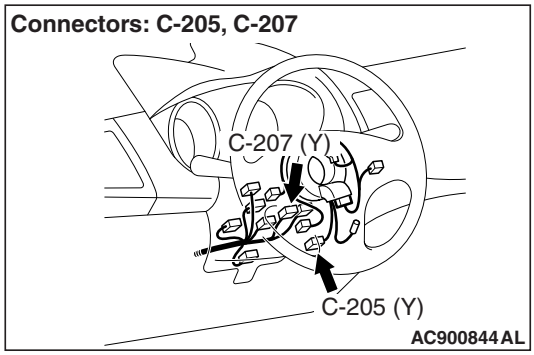

TSB Revision

⚠ **CAUTION**

- **If DTC B1B03 <1st squib> or B1B07 <2nd squib> is set in the SRS-ECU, always diagnose the CAN bus lines.**
- **When DTC B1B03 is set in the following diagnosis, check the 1st squib circuit. When DTC B1B07 is set, check the 2nd squib circuit.**

CIRCUIT OPERATION

- The SRS-ECU judges how severe a collision is by detecting signals from the front impact sensors and the front air bag analog G-sensor. If the impact is over a predetermined level, the SRS-ECU sends an ignition signal. At this time, if the front air bag safing G-sensor is on, the SRS air bag will inflate.
- The ignition signal is input to the air bag module via the clock spring to inflate the air bag.

DTC SET CONDITIONS

- This DTC is set if there is abnormal resistance between the input terminals of the driver's air bag module (squib). The most likely causes for this code to be set are the followings:
  - Short circuit in driver’s air bag module (squib) or harness
  - Short circuit in the clock spring

TROUBLESHOOTING HINTS

- Improper engaged connector or defective short spring*
- Short circuit in the clock spring
- Short circuit between the driver's air bag module (squib) circuit terminals
- Damaged connector(s)
- Malfunction of the SRS-ECU

*NOTE: *: The squib circuit connectors integrate a "short" spring (which prevents the air bag from deploying unintentionally due to static electricity by shorting the positive wire to the ground wire in the squib circuit when the connectors are disconnected). Therefore, if connector C-28, C-205 or C-207 is damaged or improperly engaged, the short spring may not be released when the connector is connected.*

DIAGNOSIS

Required Special Tools:

- MB991958: Scan Tool (M.U.T.-III Sub Assembly)
  - MB991824: Vehicle Communication Interface (V.C.I.)
  - MB991827: M.U.T.-III USB Cable
  - MB991910: M.U.T.-III Main Harness A (Vehicles with CAN communication system)
- MB991865: Dummy resistor
- MB991866: Resister harness

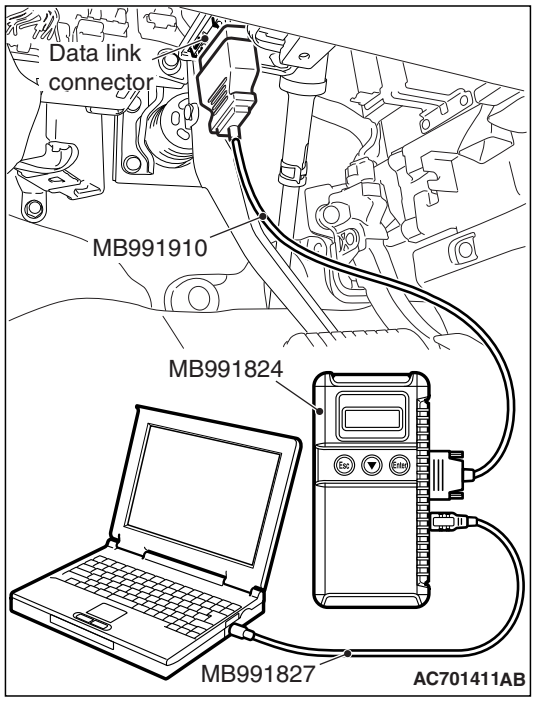

STEP 1. Using scan tool MB991958, diagnose the CAN bus line.

⚠ CAUTION

To prevent damage to scan tool MB991958, always turn the ignition switch to the "LOCK" (OFF) position before connecting or disconnecting scan tool MB991958.

(1) Connect scan tool MB991958. Refer to "How to connect the scan tool P.52B-28."
(2) Turn the ignition switch to the "ON" position.
(3) Diagnose the CAN bus line.
(4) Turn the ignition switch to the "LOCK" (OFF) position.

Q: Is the CAN bus line found to be normal?

YES : Go to Step 2.
NO : Repair the CAN bus line (Refer to GROUP 54C, Diagnosis P.54C-17).

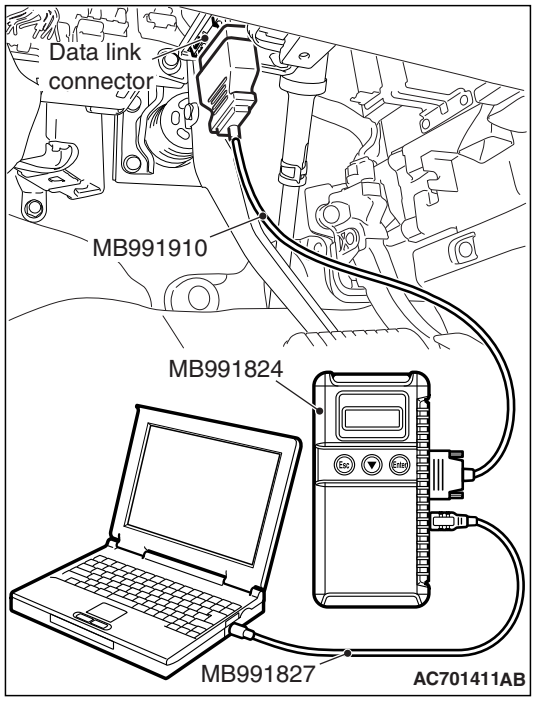

STEP 2. Recheck for diagnostic trouble code.

Check again if the DTC is set.
(1) Erase the DTC.
(2) Turn the ignition switch to "ON" position.
(3) Check if the DTC is set.
(4) Turn the ignition switch to the "LOCK" (OFF) position.

Q: Is the DTC set?

YES : Go to Step 3.
NO : There is an intermittent malfunction such as poor engaged connector(s) or open circuit (Refer to GROUP 00, How to Cope with Intermittent Malfunction P.00-15).

STEP 3. Check SRS-ECU connector C-28, driver's air bag module connector C-205 and clock spring connector C-207. (Using scan tool MB991958, read the diagnostic trouble code.)

(1) Disconnect the negative battery terminal.

(2) Disconnect connectors C-28, C-205 and C-207, and then reconnect them.

- While pushing the part "A" indicated in the figure of the harness side connector, turn the lock lever to the direction of the arrow to release the lock lever, and disconnect the C-28 SRS-ECU connector.

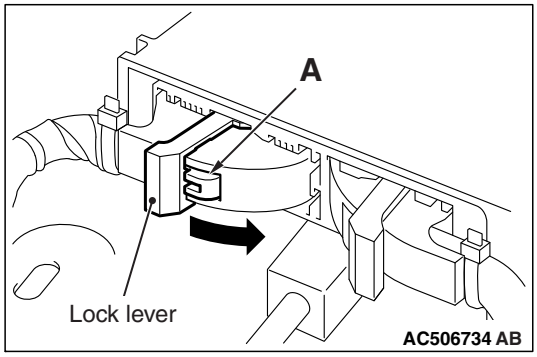

- Slide the outer housing of the clock spring side of driver's air bag module connector C-205 in the arrow direction shown, and disconnect the connector.

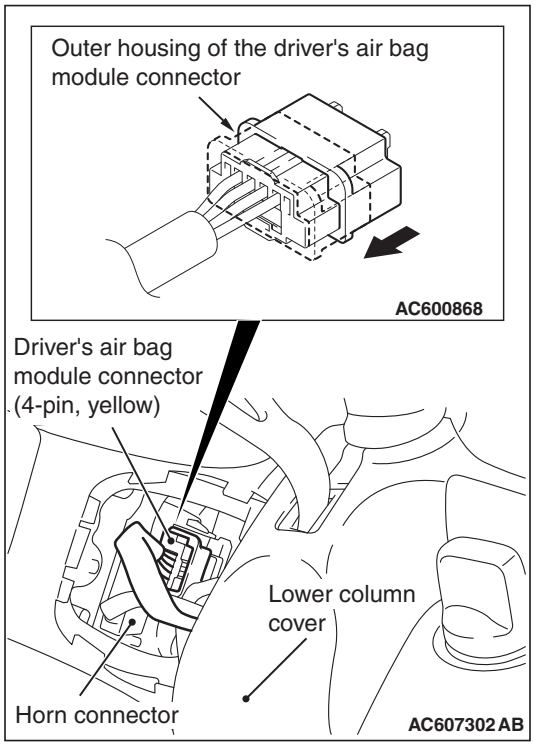

(3) Connect the negative battery terminal.

(4) Erase the diagnostic trouble code memory, and check the diagnostic trouble code.

Q: Is DTC B1B03 <1st squib> or B1B07 <2nd squib> set?

YES : Go to Step 4.

NO : The procedure is complete. It is assumed that DTC B1B03 <1st squib> or B1B07 <2nd squib> set because connector C-28, C-205 or C-207 was engaged improperly.

STEP 4. Check the driver's air bag module. (Using scan tool MB991958, read the diagnostic trouble code.)

(1) Disconnect the negative battery terminal.

(2) Slide the outer housing of the C-205 driver's air bag module connector in the arrow direction shown, and disconnect the connector.

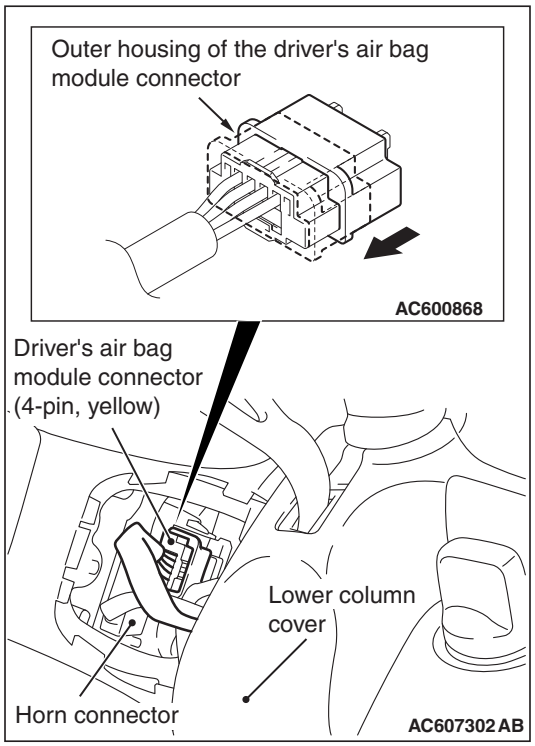

(3) Connect special tool MB991865 to special tool MB991866.

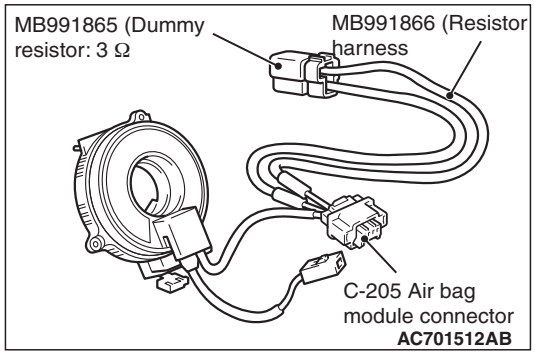

⚠ CAUTION

Do not insert a probe into the terminal from its front side directly as the connector contact pressure may be weakened.

(4) Insert special tool MB991866 into clock spring side of driver’s air bag module connector C-205 (terminal No.1 and 2 <1st squib> or No.3 and 4 <2nd squib>) by backprobing.

(5) Connect the negative battery terminal.

⚠ CAUTION

Always DTC B1B06 is set when checking DTC B1B03. This is because the second side terminal is isolated when checking it. DTC B1B06 is set but this is not a fault. In addition, always DTC B1B02 is set when checking DTC B1B07 because the first side terminal is isolated.

(6) Erase the diagnostic trouble code memory, and check the diagnostic trouble code.

Q: Is the checked DTC set?

YES : Go to Step 5.

NO : Replace the driver's air bag module. (Refer to P.52B-443). Then go to Step 8.

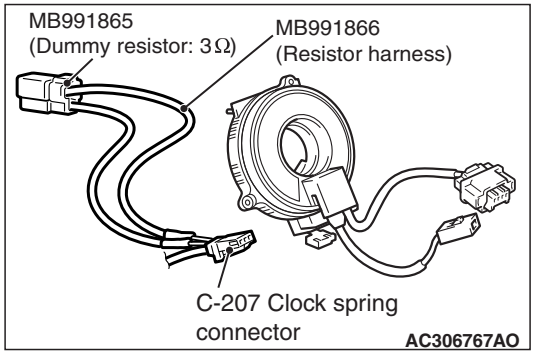

STEP 5. Check the clock spring. (Using scan tool MB991958, read the diagnostic trouble code.)

(1) Disconnect the negative battery terminal.
(2) Disconnect the clock spring connector C-207.
(3) Connect special tool MB991865 to special tool MB991866.

⚠ CAUTION

Do not insert a probe into the terminal from C-207 harness side connector front side directly, as the connector contact pressure may be weakened.

(4) Insert special tool MB991866 into clock spring harness side connector C-207 (terminal No.3 and 4 <1st squib> or No.1 and 2 <2nd squib>) by backprobing.
(5) Connect the negative battery terminal.

⚠ CAUTION

Always DTC B1B06 is set when checking DTC B1B03. This is because the second side terminal is isolated when checking it. DTC B1B06 is set but this is not a fault. In addition, always DTC B1B02 is set when checking DTC B1B07 because the first side terminal is isolated.

(6) Erase the diagnostic trouble code memory, and check the diagnostic trouble code.

Q: Is the checked DTC set?

YES : Go to Step 6.
NO : Replace the clock spring. (Refer to P.52B-443). Then go to Step 8.

STEP 6. Check the driver's air bag module circuit. Measure the resistance at SRS-ECU connector C-28.

(1) Disconnect the negative battery terminal.

(2) While pushing the part "A" indicated in the figure of the harness side connector, turn the lock lever to the direction of the arrow to release the lock lever, and disconnect the C-28 SRS-ECU connector.

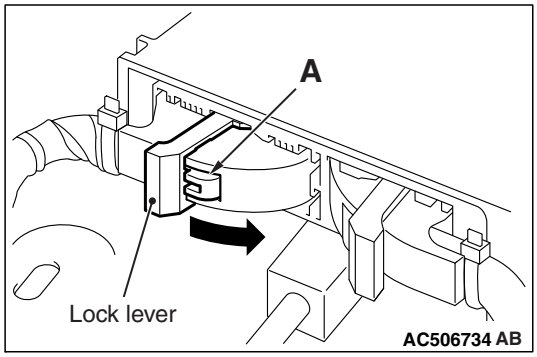

⚠ ***DANGER***

To prevent the air bag from deploying unintentionally, disconnect clock spring connector C-207 to short the squib circuit.

(3) Disconnect clock spring connector C-207.

⚠ **CAUTION**

Insert an insulator such as a cable tie to a depth of 4mm (0.16 inch) or more, otherwise the short spring will not be released.

(4) Insert a cable tie [3 mm (0.12 inch) wide, 0.5 mm (0.02 inch) thick] between terminals 5, 6 <1st squib> or 9, 10 <2nd squib> and the short spring to release the short spring.

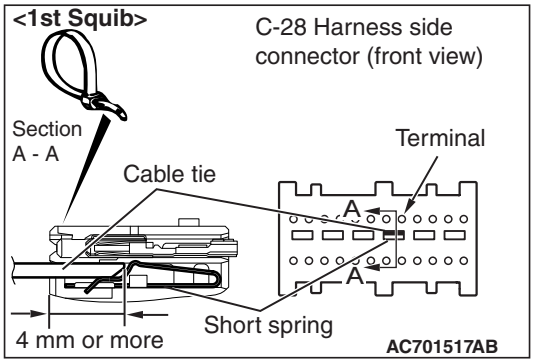

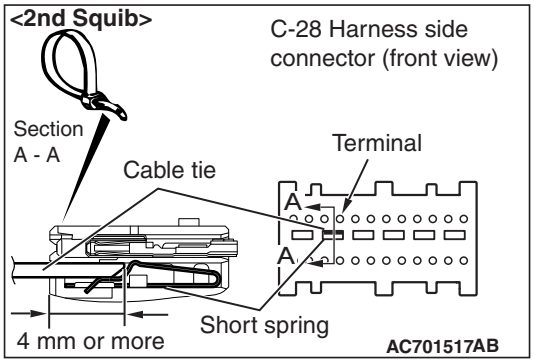

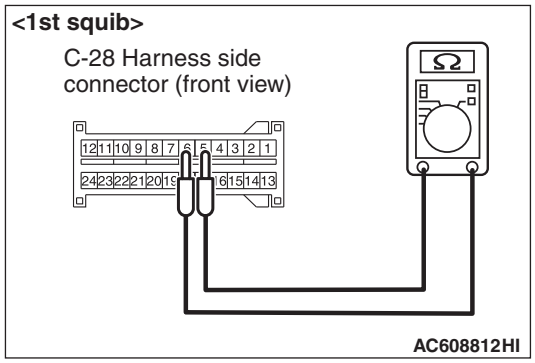

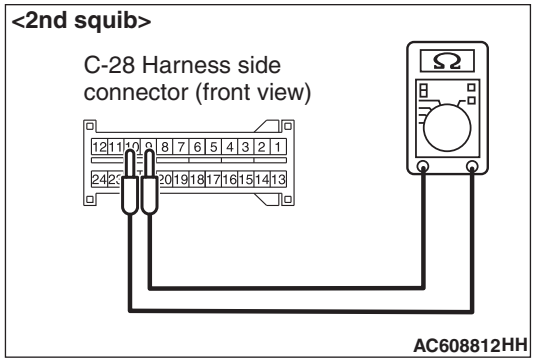

(5) Check for continuity between C-28 harness side connector terminals 5 and 6 <1st squib> or 9 and 10 <2nd squib>. It should be open circuit.

Q: Is it open circuit?

YES : Erase the diagnostic trouble code memory, and check the diagnostic trouble code. If DTC B1B03 <1st squib> or B1B07 <2nd squib> set, replace the SRS-ECU. (Refer to P.52B-440). Go to Step 8.

NO : Go to Step 7.

STEP 7. Check the harness for short circuit between the harness wire and wire.

- SRS-ECU connector C-28 (terminal No.5 and 6) and clock spring connector C-207 (terminal No.4 and 3) <1st squib>.
- SRS-ECU connector C-28 (terminal No.9 and 10) and clock spring connector C-207 (terminal No.1 and 2) <2nd squib>.

Q: the check result normal?

YES : Go to Step 8.

NO : Repair the harness wires between SRS-ECU connector C-28 and clock spring connector C-207. Then go to Step 8.

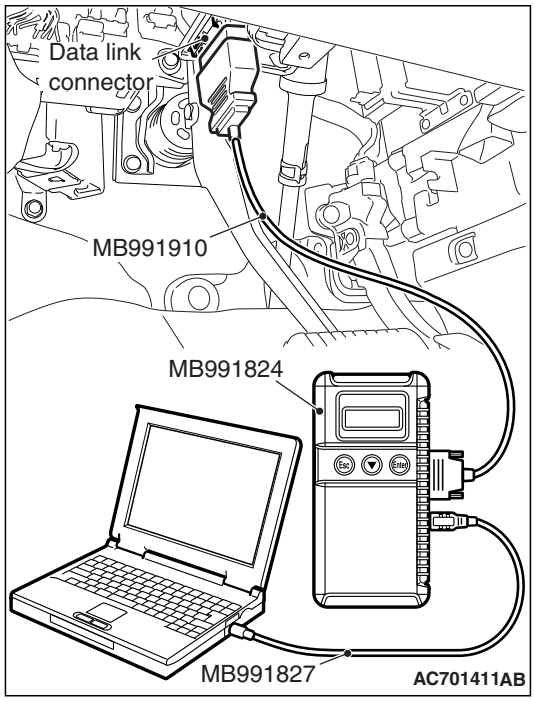

STEP 8. Recheck for diagnostic trouble code.

Check again if the DTC is set.

(1) Erase the DTC.
(2) Turn the ignition switch to the "ON" position.
(3) Check if the DTC is set.
(4) Turn the ignition switch to the "LOCK" (OFF) position.

Q: Is DTC B1B03 <1st squib> or B1B07 <2nd squib> set?

YES : Return to Step 1.
NO : The procedure is complete.

DTC B1B08: Passenger's (Front) Air Bag Module (1st squib) System (Shorted to Squib Circuit Ground)
DTC B1B0C: Passenger's (Front) Air Bag Module (2nd squib) System (Shorted to Squib Circuit Ground)

Passenger's (Front) Air Bag Module (Squib) Circuit

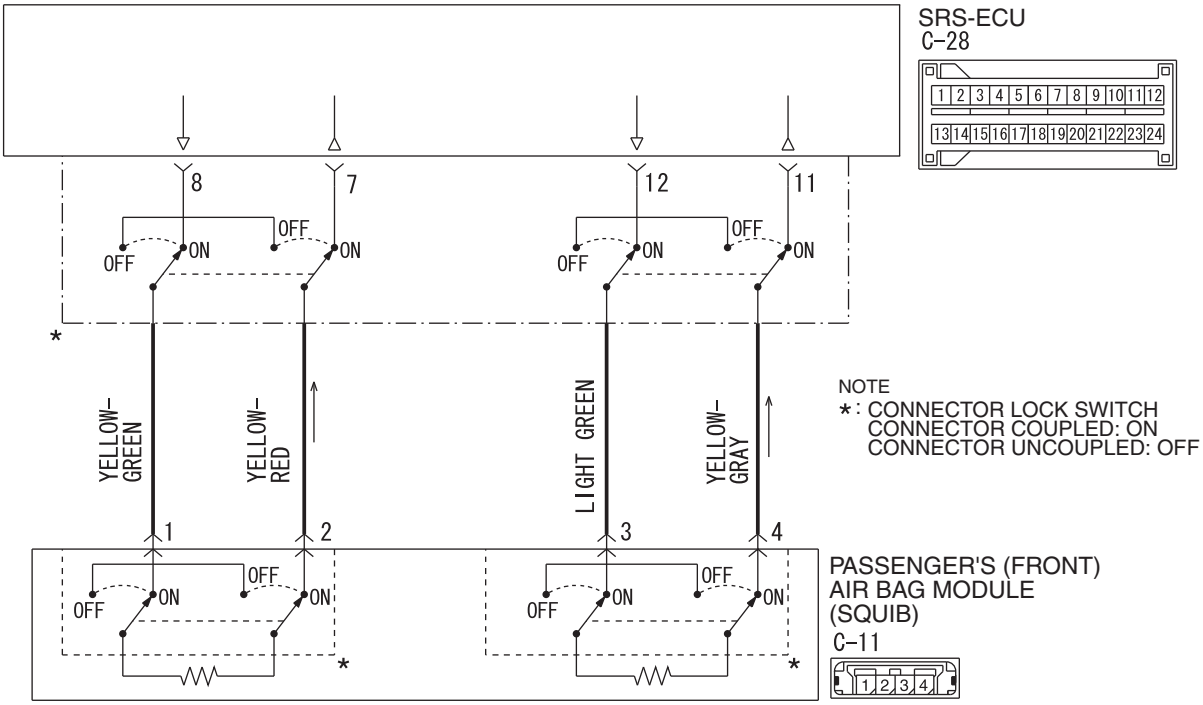

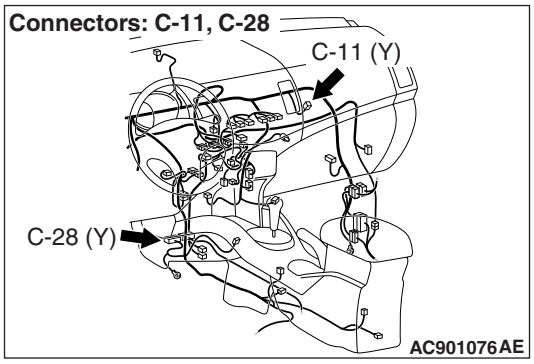

⚠ CAUTION

- **If DTC B1B08 <1st squib> or B1B0C <2nd squib> is set in the SRS-ECU, always diagnose the CAN main bus line.**
- **When DTC B1B08 is set in the following diagnosis, check the 1st squib circuit. When DTC B1B0C is set, check the 2nd squib circuit.**

CIRCUIT OPERATION

- The SRS-ECU judges how severe a collision is by detecting signals from the front impact sensors and the front air bag analog G-sensor. If the impact is over a predetermined level, the SRS-ECU sends an ignition signal. At this time, if the front air bag safing G-sensor is on, the SRS air bag will inflate.
- The ignition signal is input to the air bag module to inflate the air bag.

DTC SET CONDITIONS

This DTC is set if there is abnormal resistance between the input terminals of the passenger's (front) air bag module (squib).

TROUBLESHOOTING HINTS

- Damaged harness wires and connectors
- Short to the ground in the passenger's (front) air bag module (squib) harness
- Malfunction of the SRS-ECU

DIAGNOSIS

Required Special Tools:

- MB991958: Scan Tool (M.U.T.-III Sub Assembly)
  - MB991824: Vehicle Communication Interface (V.C.I.)
  - MB991827: M.U.T.-III USB Cable
  - MB991910: M.U.T.-III Main Harness A (Vehicles with CAN Communication System)
- MB991865: Dummy resistor
- MB991866: Resister harness

STEP 1. Using scan tool MB991958, diagnose the CAN bus line.

⚠ CAUTION

To prevent damage to scan tool MB991958, always turn the ignition switch to the "LOCK" (OFF) position before connecting or disconnecting scan tool MB991958.

(1) Connect scan tool MB991958. Refer to "How to connect the scan tool P.52B-28."
(2) Turn the ignition switch to the "ON" position.
(3) Diagnose the CAN bus line.
(4) Turn the ignition switch to the "LOCK" (OFF) position.

Q: Is the CAN bus line found to be normal?

YES : Go to Step 2.
NO : Repair the CAN bus line (Refer to GROUP 54C, Diagnosis P.54C-17).

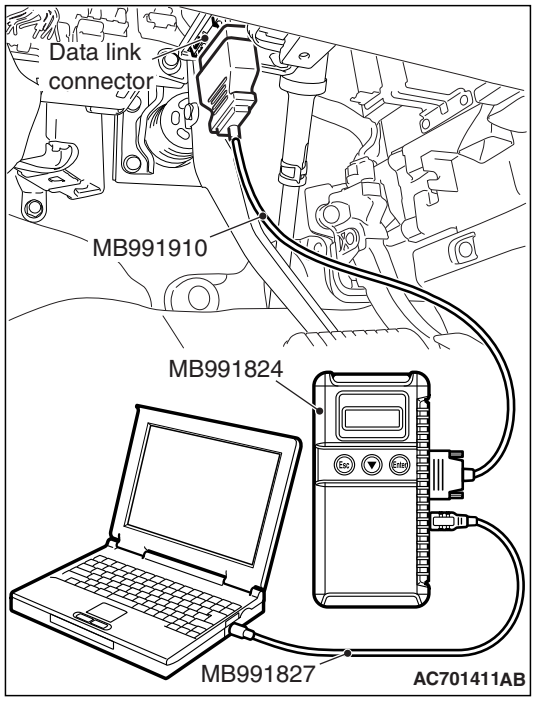

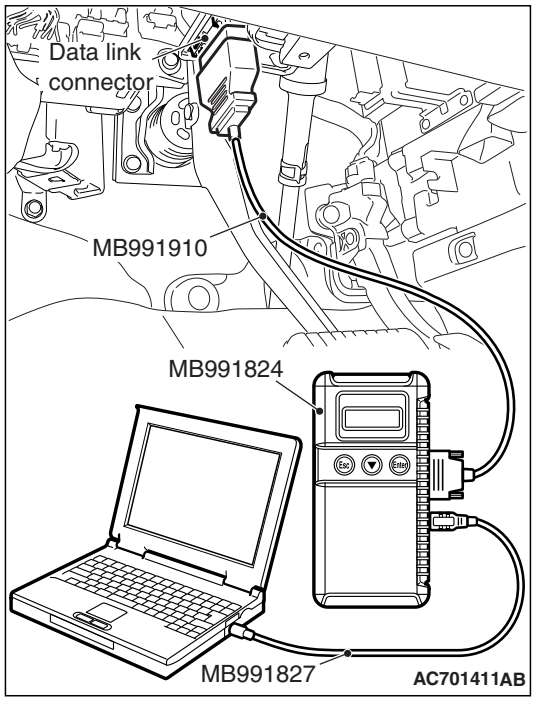

STEP 2. Recheck for diagnostic trouble code.

Check again if the DTC is set.

(1) Erase the DTC.
(2) Turn the ignition switch to the "ON" position.
(3) Check if the DTC is set.
(4) Turn the ignition switch to the "LOCK" (OFF) position.

Q: Is the DTC set?

YES : Go to Step 3.

NO : There is an intermittent malfunction such as poor engaged connector(s) or open circuit (Refer to GROUP 00, How to Cope with Intermittent Malfunction P.00-15).

STEP 3. Check the passenger's (front) air bag module. (Using scan tool MB991958, read the diagnostic trouble code.)

(1) Disconnect the negative battery terminal.
(2) Disconnect the passenger’s (front) air bag module connector C-11.
(3) Slide the outer housing of passenger’s (front) air bag module connector C-11 in the arrow direction shown, and disconnect the connector.

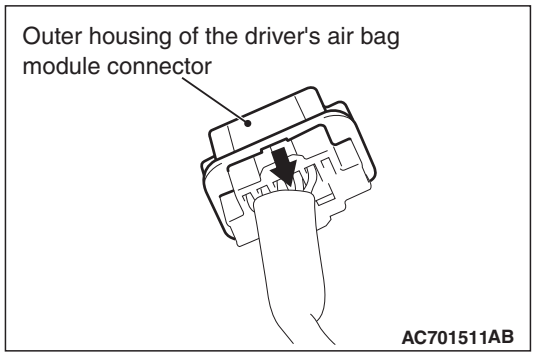

(4) Connect special tool MB991865 to special tool MB991866.

⚠ CAUTION

Do not insert a test probe into the terminal from its front side directly, as the connector contact pressure may be weakened.

(5) Insert special tool MB991866 into the harness side connector C-11 (terminal No.1 and 2 <1st squib> or terminal No.3 and 4 <2nd squib>) by backprobing.
(6) Connect the negative battery terminal.

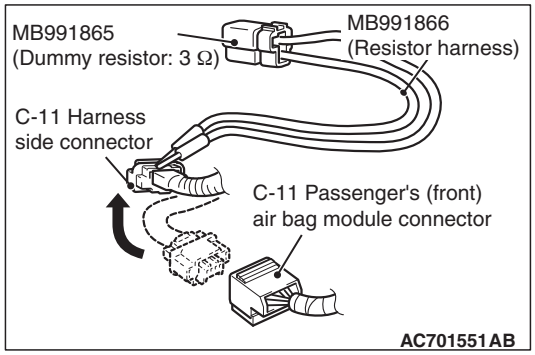

⚠ CAUTION

Always DTC B1B0E is set when checking DTC B1B08. This is because the second side terminal is isolated when checking it. DTC B1B0E is set but this is not a fault. In addition, always DTC B1B0A is set when checking DTC B1B0C because the first side terminal is isolated.

(7) Erase the diagnostic trouble code memory, and check the diagnostic trouble code.

Q: Is the checked DTC set?

YES : Go to Step 4.
NO : Replace the passenger's (front) air bag module. (Refer to P.52B-443). Then go to Step 6.

STEP 4. Check the passenger's (front) air bag module circuit. Measure the resistance at the SRS-ECU connector C-28.

(1) Disconnect the negative battery terminal.

(2) While pushing the part "A" indicated in the figure of the harness side connector, turn the lock lever to the direction of the arrow to release the lock lever, and disconnect the C-28 SRS-ECU connector.

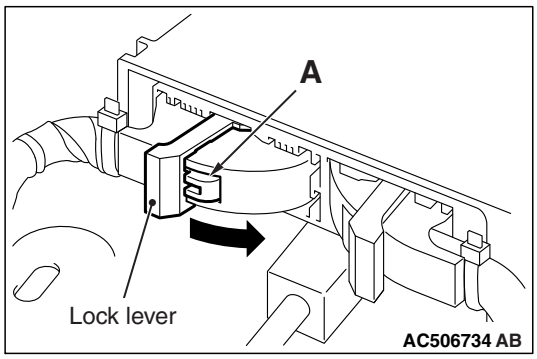

⚠ DANGER

To prevent the air bag from deploying unintentionally, disconnect the passenger's (front) air bag module connector C-11 to short the squib circuit.

(3) Slide the outer housing of passenger's (front) air bag module connector C-11 in the arrow direction shown, and disconnect the connector.

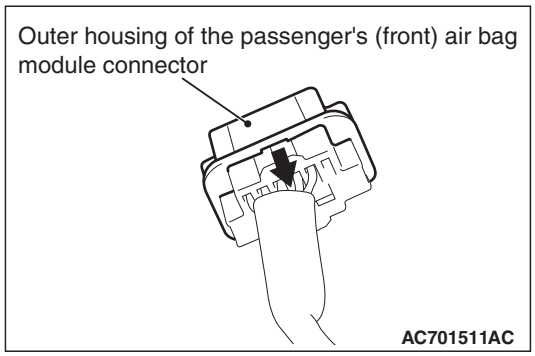

⚠ CAUTION

Insert an insulator such as a cable tie to a depth of 4 mm (0.16 inch) or more, otherwise the short spring will not be released.

(4) Insert a cable tie [3 mm (0.12 inch) wide, 0.5 mm (0.02 inch) thick] between terminals 7 and 8 <1st squib> or 11 and 12 <2nd squib>, and the short spring to release the short spring.

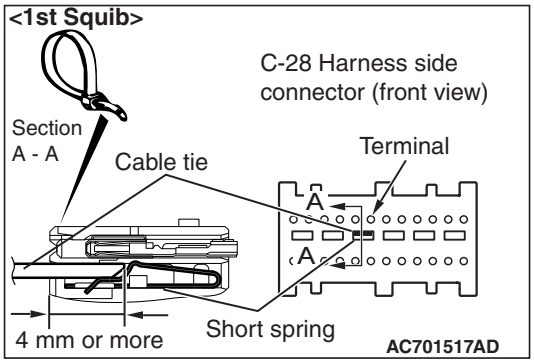

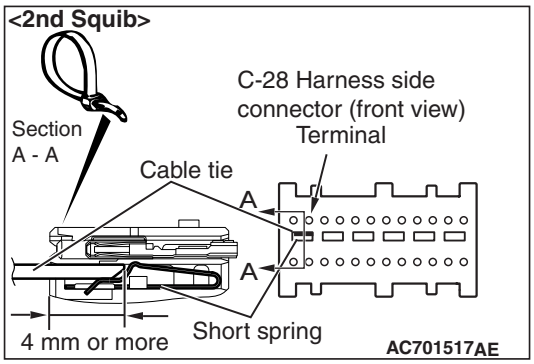

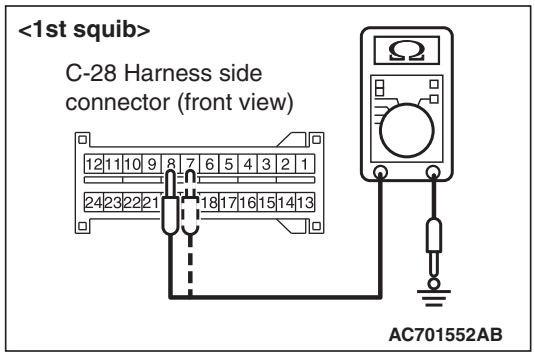

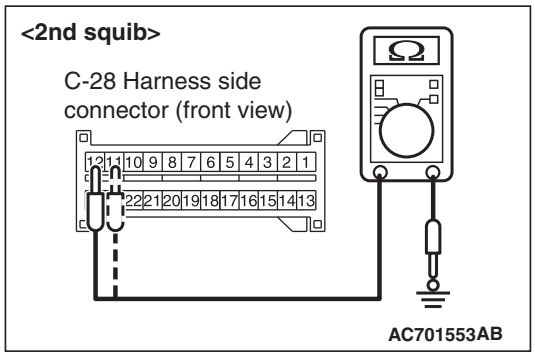

(5) Check for continuity between C-28 harness side connector terminals 7 and 8 <1st squib> or 11 and 12 <2nd squib>, and body ground.
It should be an open circuit.

Q: Is it open circuit?

YES : Erase the diagnostic trouble code memory, and check the diagnostic trouble code. If DTC B1B08 <1st squib> B1B0C <2nd squib> sets, replace the SRS-ECU. (Refer to P.52B-440). Go to Step 6.

NO : Go to Step 5.

STEP 5. Check the harness wires for short circuit to ground between the following connector.

- SRS-ECU connector C-28 (terminal No.7 and 8) and passenger's (front) air bag module connector C-11 (terminal No.2 and 1) <1st squib>.
- SRS-ECU connector C-28 (terminal No.11 and 12) and passenger's (front) air bag module connector C-11 (terminal No.4 and 3) <2nd squib>.

Q: Is the check result normal?

YES : Go to Step 6.

NO : Repair the harness wires between SRS-ECU connector C-28 and passenger's (front) air bag module connector C-11. Then go to Step 6.

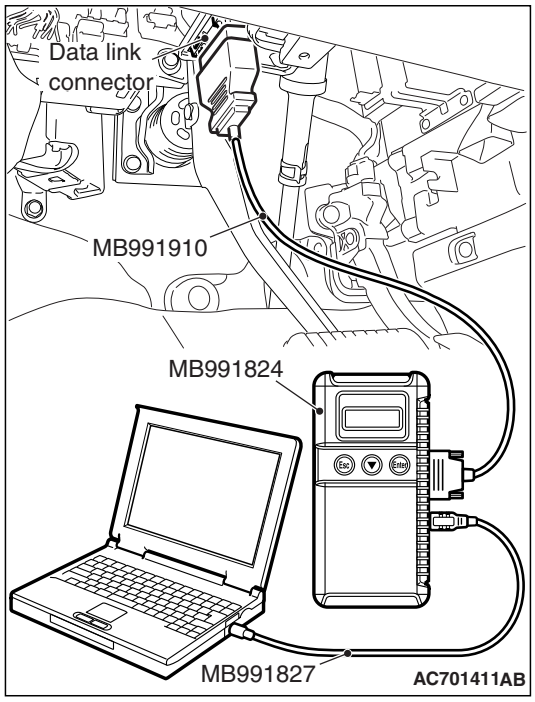

STEP 6. Recheck for diagnostic trouble code.

Check again if the DTC is set.

(1) Erase the DTC.
(2) Turn the ignition switch to the "ON" position.
(3) Check if the DTC is set.
(4) Turn the ignition switch to the "LOCK" (OFF) position.

Q: Is DTC B1B08 <1st squib> B1B0C <2nd squib> set?

YES : Return to Step 1.
NO : The procedure is complete.

DTC B1B09: Passenger's (Front) Air Bag Module (<1st squib>) System (Shorted to Squib Circuit Power Supply)
DTC B1B0D: Passenger's (Front) Air Bag Module (<2nd squib>) System (Shorted to Squib Circuit Power Supply

Passenger's (Front) Air Bag Module (Squib) Circuit

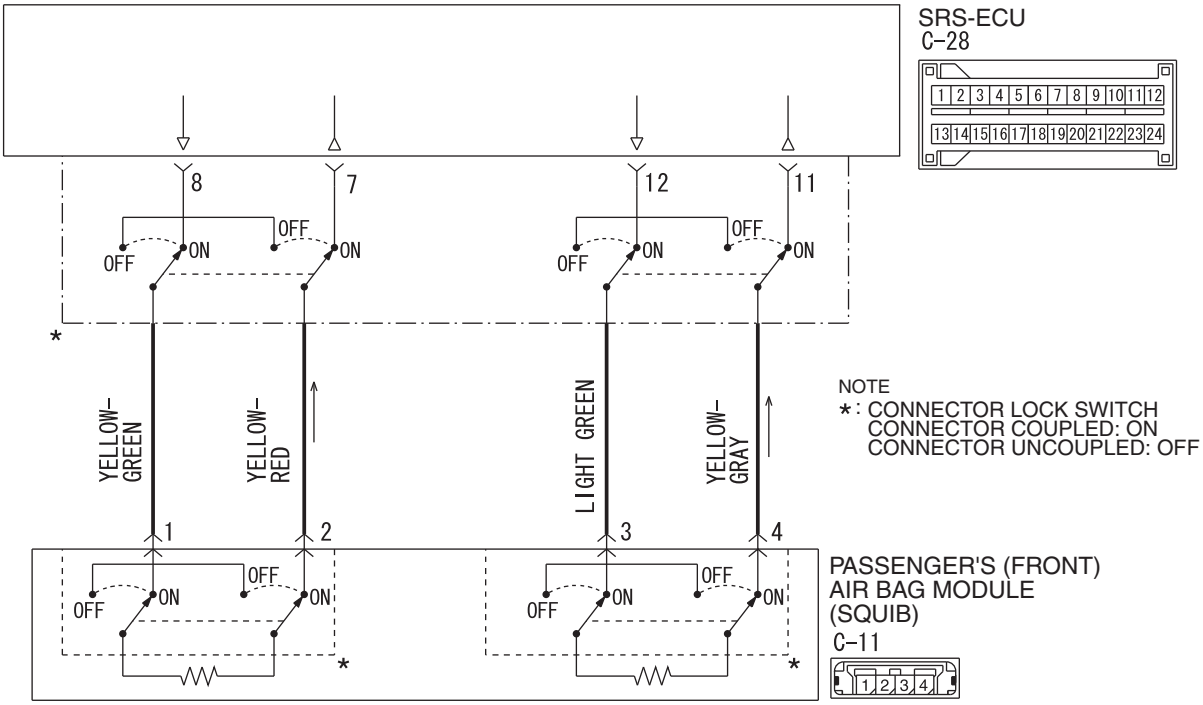

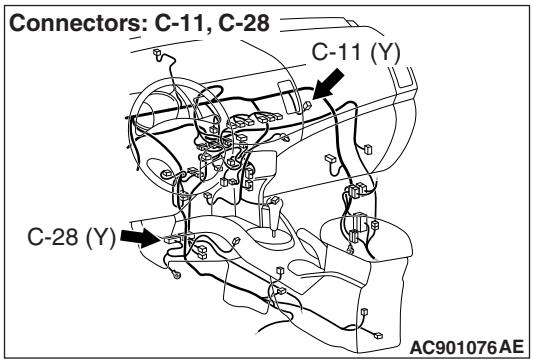

⚠ CAUTION

- **If DTC B1B09 <1st squib> or B1B0D <2nd squib> is set in the SRS-ECU, always diagnose the CAN main bus line.**
- **When DTC B1B09 is set in the following diagnosis, check the 1st squib circuit. When DTC B1B0D is set, check the 2nd squib circuit.**

CIRCUIT OPERATION

- The SRS-ECU judges how severe a collision is by detecting signals from the front impact sensors and the front air bag analog G-sensor. If the impact is over a predetermined level, the SRS-ECU sends an ignition signal. At this time, if the front air bag safing G-sensor is on, the SRS air bag will inflate.
- The ignition signal is input to the air bag module to inflate the air bag.

DTC SET CONDITIONS

This DTC is set if there is abnormal resistance between the input terminals of the passenger's (front) air bag module (squib).

TROUBLESHOOTING HINTS

- Damaged harness wires and connectors
- Short to the power supply in the passenger's (front) air bag module (squib) harness
- Malfunction of the SRS-ECU

DIAGNOSIS

Required Special Tools:

- MB991958: Scan Tool (M.U.T.-III Sub Assembly)
  - MB991824: Vehicle Communication Interface (V.C.I.)
  - MB991827: M.U.T.-III USB Cable
  - MB991910: M.U.T.-III Main Harness A (Vehicles with CAN Communication System)
- MB991865: Dummy resistor
- MB991866: Resister harness

STEP 1. Using scan tool MB991958, diagnose the CAN bus line.

⚠ CAUTION

To prevent damage to scan tool MB991958, always turn the ignition switch to the "LOCK" (OFF) position before connecting or disconnecting scan tool MB991958.

(1) Connect scan tool MB991958. Refer to "How to connect the scan tool P.52B-28."
(2) Turn the ignition switch to the "ON" position.
(3) Diagnose the CAN bus line.
(4) Turn the ignition switch to the "LOCK" (OFF) position.

Q: Is the CAN bus line found to be normal?

YES : Go to Step 2.
NO : Repair the CAN bus line (Refer to GROUP 54C, Diagnosis P.54C-17).

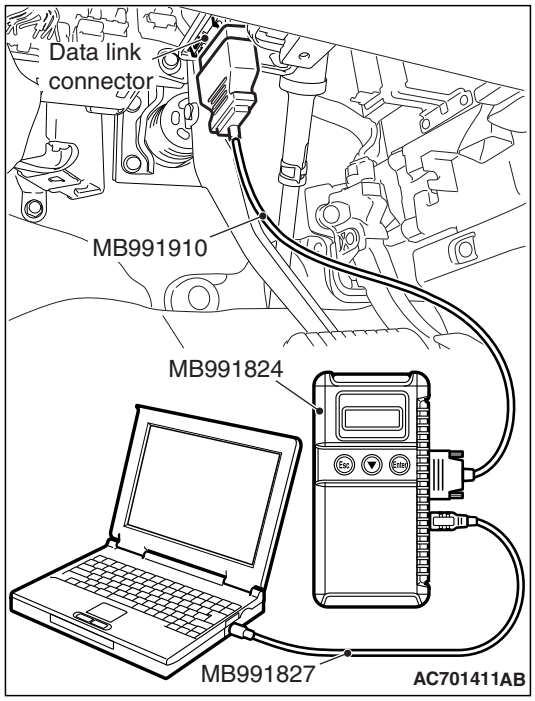

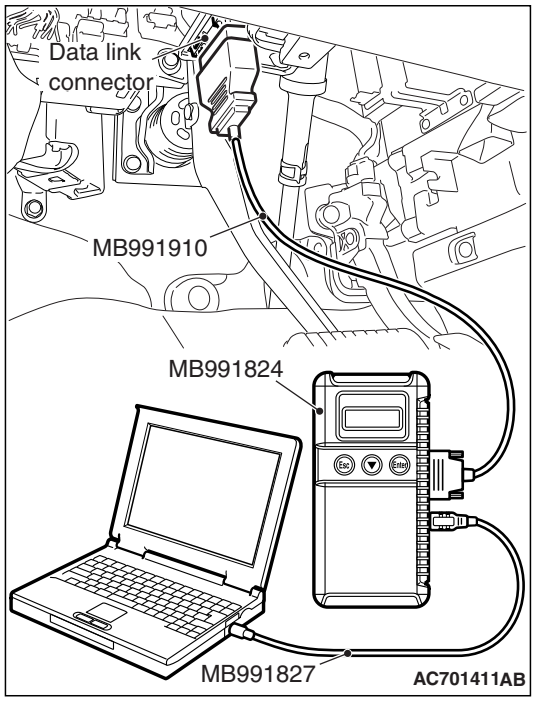

STEP 2. Recheck for diagnostic trouble code.

Check again if the DTC is set.

(1) Erase the DTC.
(2) Turn the ignition switch to the "ON" position.
(3) Check if the DTC is set.
(4) Turn the ignition switch to the "LOCK" (OFF) position.

Q: Is the DTC set?

YES : Go to Step 3.

NO : There is an intermittent malfunction such as poor engaged connector(s) or open circuit (Refer to GROUP 00, How to Cope with Intermittent Malfunction P.00-15).

STEP 3. Check the passenger's (front) air bag module. (Using scan tool MB991958, read the diagnostic trouble code.)

(1) Disconnect the negative battery terminal.

(2) Slide the outer housing of passenger's (front) air bag module connector C-11 in the arrow direction shown, and disconnect the connector.

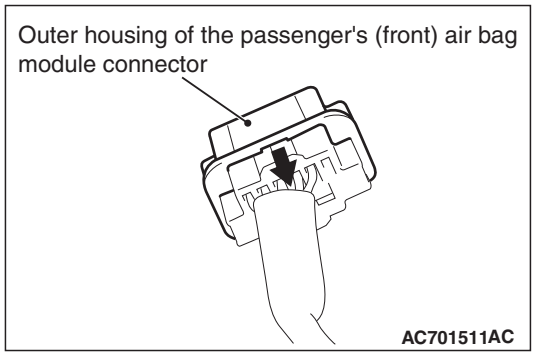

(3) Connect special tool MB991865 to special tool MB991866.

⚠ CAUTION

Do not insert a probe into the terminal from its front side directly, as the connector contact pressure may be weakened.

(4) Insert special tool MB991866 into the harness side connector C-11 (terminal No.1 and 2 <1st squib> or terminal No.3 and 4 <2nd squib>) by backprobing.

(5) Connect the negative battery terminal.

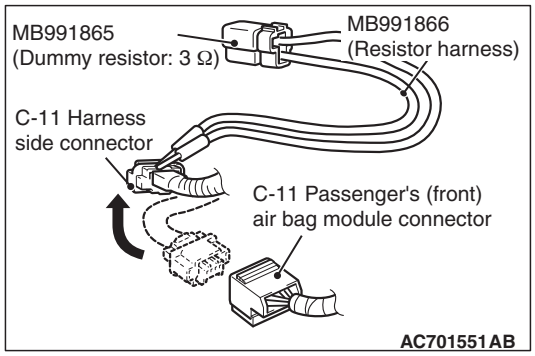

⚠ CAUTION

Always DTC B1B0E is set when checking DTC B1B09. This is because the second side terminal is isolated when checking it. DTC B1B0E is set but this is not a fault. In addition, always DTC B1B0A is set when checking DTC B1B0D because the first side terminal is isolated.

(6) Erase the diagnostic trouble code memory, and check the diagnostic trouble code.

Q: Is the checked DTC set?

YES : Go to Step 4.

NO : Replace the passenger's (front) air bag module. (Refer to P.52B-443). Then go to Step 6.

STEP 4. Check the passenger's (front) air bag module circuit. Measure the voltage at the SRS-ECU connector C-28.

(1) Disconnect the negative battery terminal.

(2) While pushing the part "A" indicated in the figure of the harness side connector, turn the lock lever to the direction of the arrow to release the lock lever, and disconnect the C-28 SRS-ECU connector.

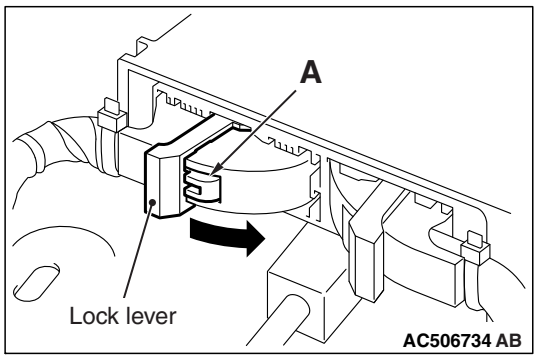

⚠ ***DANGER***

To prevent the air bag from deploying unintentionally, disconnect the passenger's (front) air bag module connector C-11 to short the squib circuit.

(3) Disconnect the passenger's (front) air bag module connector C-11.

(4) Slide the outer housing of passenger's (front) air bag module connector C-11 in the arrow direction shown, and disconnect the connector.

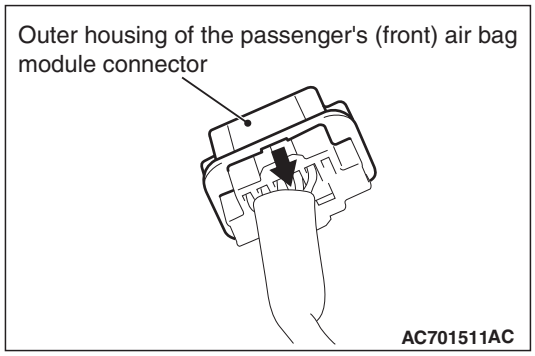

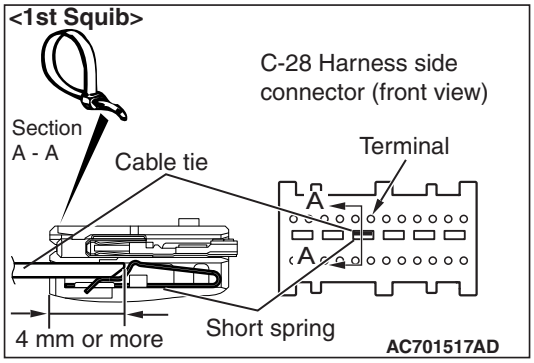

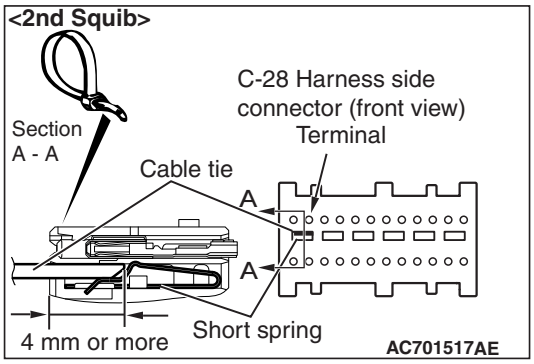

⚠ CAUTION

Insert an insulator such as a cable tie to a depth of 4 mm (0.16 inch) or more, otherwise the short spring will not be released.

(5) Insert a cable tie [3 mm (0.12 inch) wide, 0.5 mm (0.02 inch) thick] between terminals 7 and 8 <1st squib> or 11 and 12 <2nd squib>, and the short spring to release the short spring.
(6) Connect the negative battery terminal.
(7) Ignition switch: ON.

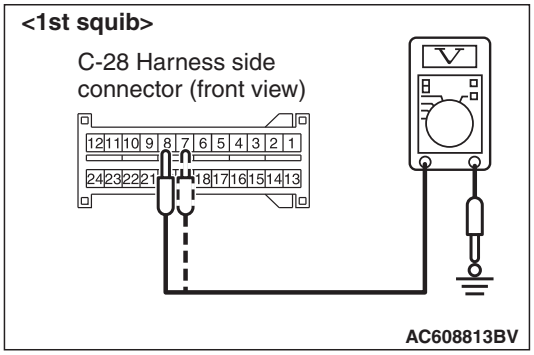

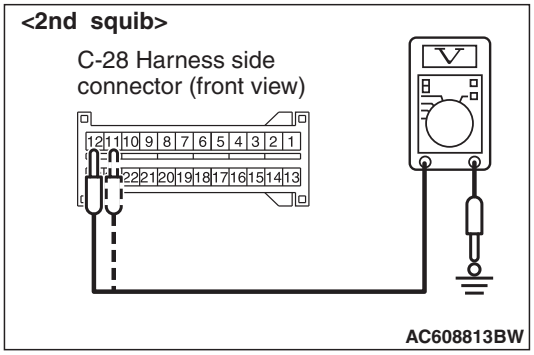

(8) Measure the voltage between C-28 harness side connector terminals 7 and 8 <1st squib> or 11 and 12 <2nd squib> and body ground.
Voltage should measure 1 volt or less.

Q: Is the measured voltage within the specified range?

YES : Erase the diagnostic trouble code memory, and check the diagnostic trouble code. If DTC B1B09 <1st squib> B1B0D <2nd squib> sets, replace the SRS-ECU. (Refer to P.52B-440. Then go to Step 6.

NO : Go to Step 5.

STEP 5. Check the harness wires for short circuit to power supply between the following connector.

- SRS-ECU connector C-28 (terminal No.7 and 8) and passenger's (front) air bag module connector C-11 (terminal No.2 and 1) <1st squib>.
- SRS-ECU connector C-28 (terminal No.11 and 12) and passenger's (front) air bag module connector C-11 (terminal No.4 and 3) <2nd squib>.

Q: Is the check result normal?

YES : Go to Step 6.

NO : Repair the harness wires between SRS-ECU connector C-28 and passenger's (front) air bag module connector C-11. Then go to Step 6.

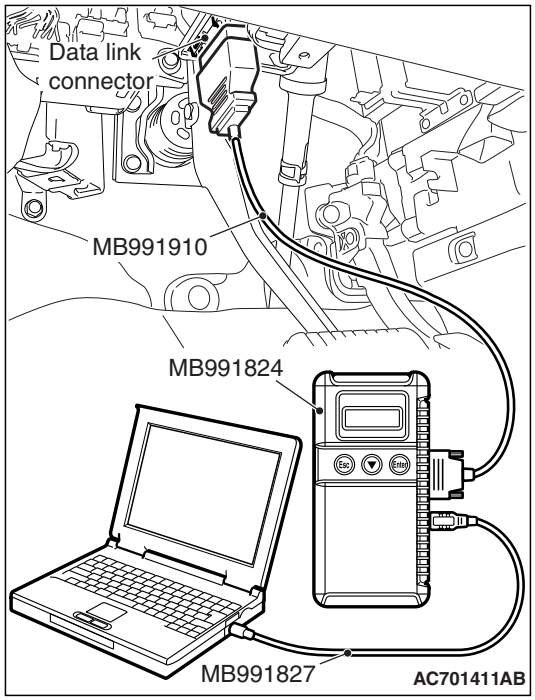

STEP 6. Recheck for diagnostic trouble code.

Check again if the DTC is set.

(1) Erase the DTC.
(2) Turn the ignition switch to the "ON" position.
(3) Check if the DTC is set.
(4) Turn the ignition switch to the "LOCK" (OFF) position.

Q: Is DTC B1B09 <1st squib> B1B0D <2nd squib> set?

YES : Return to Step 1.

NO : The procedure is complete.

DTC B1B0A: Passenger's (Front) Air Bag Module (1st squib) System (Squib Circuit Open)
DTC B1B0E: Passenger's (Front) Air Bag Module (2nd squib) System (Squib Circuit Open)

Passenger's (Front) Air Bag Module (Squib) Circuit

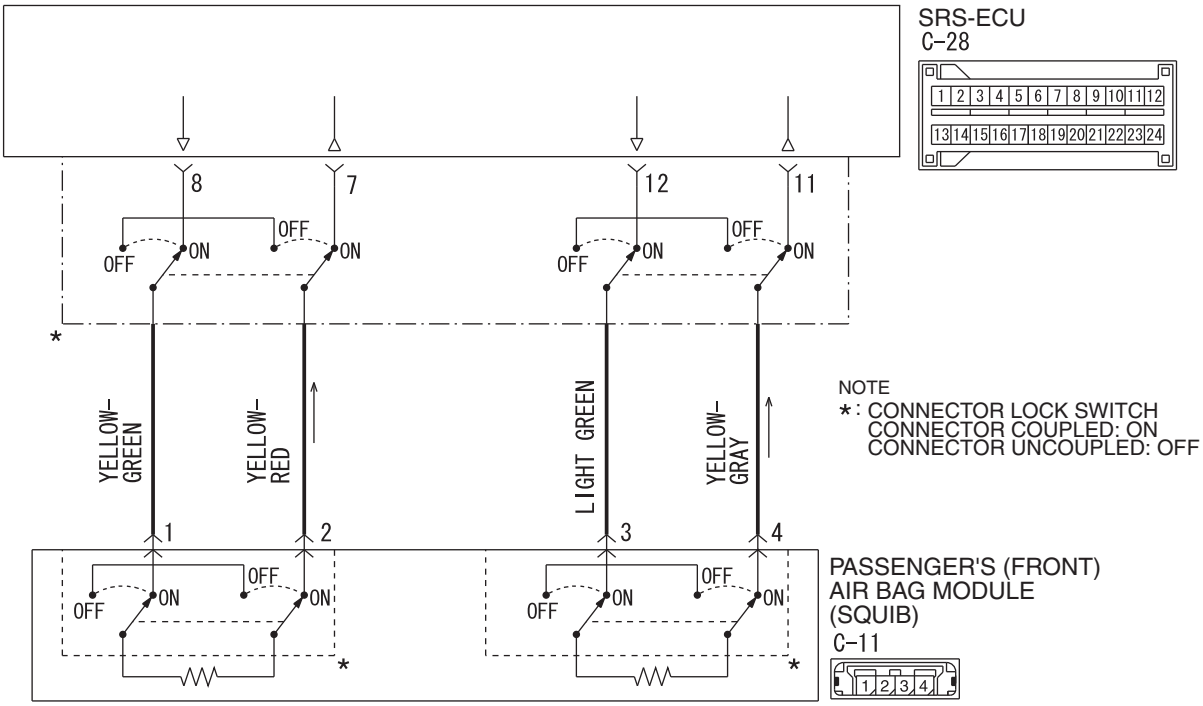

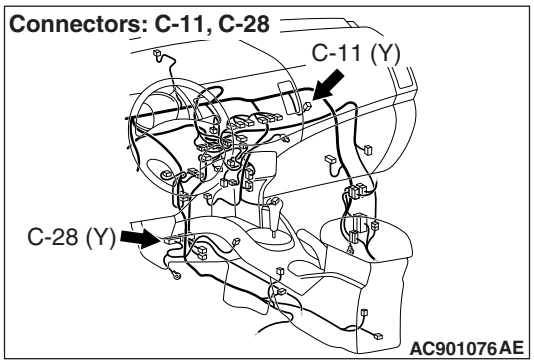

⚠ CAUTION

- **If DTC B1B0A <1st squib> or B1B0E <2nd squib> is set in the SRS-ECU, always diagnose the CAN main bus line.**
- **When DTC B1B0A is set in the following diagnosis, check the 1st squib circuit. When DTC B1B0E is set, check the 2nd squib circuit.**

CIRCUIT OPERATION

- The SRS-ECU judges how severe a collision is by detecting signals from the front impact sensors and the front air bag analog G-sensor. If the impact is over a predetermined level, the SRS-ECU sends an ignition signal. At this time, if the front air bag safing G-sensor is on, the SRS air bag will inflate.
- The ignition signal is input to the air bag module to inflate the air bag.

DTC SET CONDITIONS

This DTC is set if there is abnormal resistance between the input terminals of the passenger's (front) air bag module (squib).

TROUBLESHOOTING HINTS

- Open circuit in the passenger's (front) air bag module (squib) circuit
- Improper connector contact
- Malfunction of the SRS-ECU

DIAGNOSIS

Required Special Tools:

- MB991958: Scan Tool (M.U.T.-III Sub Assembly)
  - MB991824: Vehicle Communication Interface (V.C.I.)
  - MB991817: M.U.T.-III USB Cable
  - MB991910: M.U.T.-III Main Harness A (Vehicles with CAN Communication System)
- MB991865: Dummy resister
- MB991866: Resister harness

STEP 1. Using scan tool MB991958, diagnose the CAN bus line.

⚠ CAUTION

To prevent damage to scan tool MB991958, always turn the ignition switch to the "LOCK" (OFF) position before connecting or disconnecting scan tool MB991958.

(1) Connect scan tool MB991958. Refer to "How to connect the scan tool P.52B-28."
(2) Turn the ignition switch to the "ON" position.
(3) Diagnose the CAN bus line.
(4) Turn the ignition switch to the "LOCK" (OFF) position.

Q: Is the CAN bus line found to be normal?

YES : Go to Step 2.
NO : Repair the CAN bus line (Refer to GROUP 54C, Diagnosis P.54C-17).

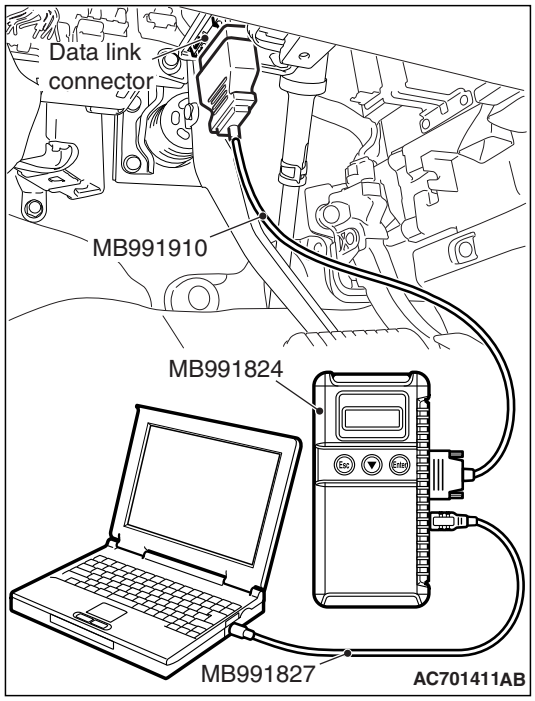

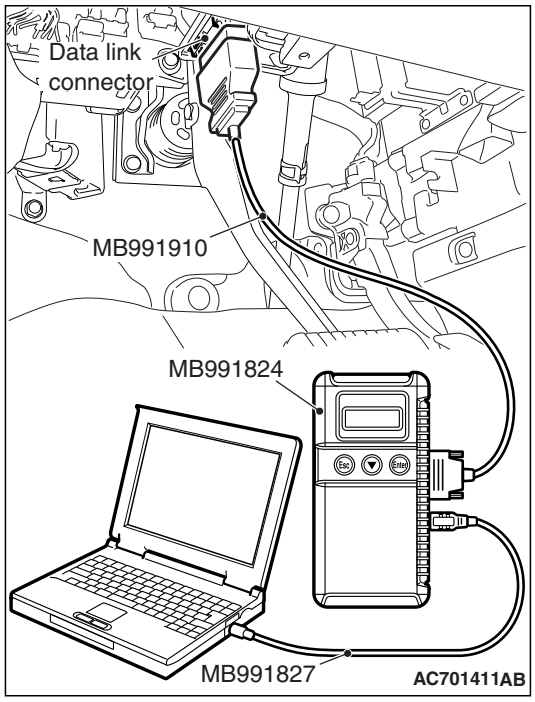

STEP 2. Recheck for diagnostic trouble code.

Check again if the DTC is set.

(1) Erase the DTC.
(2) Turn the ignition switch to the "ON" position.
(3) Check if the DTC is set.
(4) Turn the ignition switch to the "LOCK" (OFF) position.

Q: Is the DTC set?

YES : Go to Step 3.

NO : There is an intermittent malfunction such as poor engaged connector(s) or open circuit (Refer to GROUP 00, How to Cope with Intermittent Malfunction P.00-15).

STEP 3. Check the passenger's (front) air bag module. (Using scan tool MB991958, read the diagnostic trouble code.)

(1) Disconnect the negative battery terminal.

(2) Slide the outer housing of passenger's (front) air bag module connector C-11 in the arrow direction shown, and disconnect the connector.

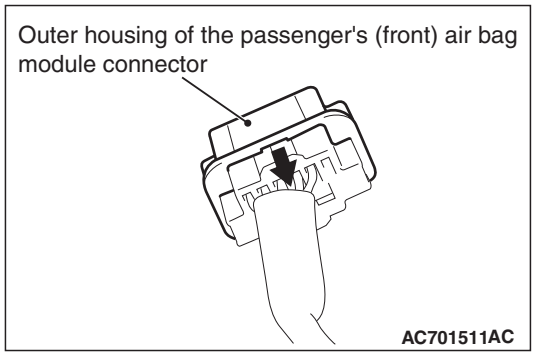

(3) Connect special tool MB991865 to special tool MB991866.

⚠ CAUTION

Do not insert a probe into the terminal from its front side directly, as the connector contact pressure may be weakened.

(4) Insert special tool MB991866 into the harness side connector C-11 (terminal No.1 and 2 <1st squib> or terminal No.3 and 4 <2nd squib>) by backprobing.

(5) Connect the negative battery terminal.

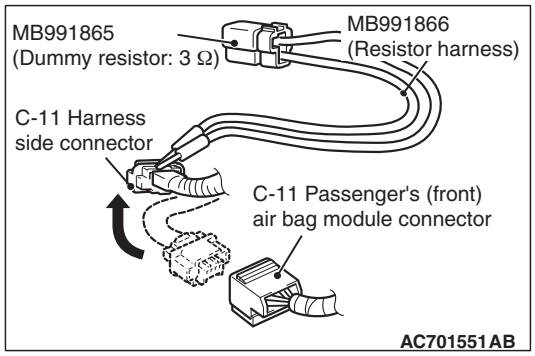

⚠ CAUTION

Always DTC B1B0E is set when checking DTC B1B0A. This is because the second side terminal is isolated when checking it. DTC B1B0E is set but this is not a fault. In addition, always DTC B1B0A is set when checking DTC B1B0E because the first side terminal is isolated.

(6) Erase the diagnostic trouble code memory, and check the diagnostic trouble code.

Q: Is the checked DTC set?

YES : Go to Step 4.

NO : Replace the passenger's (front) air bag module. (Refer to P.52B-443). Then go to Step 5.

STEP 4. Check the harness for open circuit between SRS-ECU connector C-28 and the passenger's (front) air bag module connector C-11.

(1) Disconnect the negative battery terminal.

(2) While pushing the part "A" indicated in the figure of the harness side connector, turn the lock lever to the direction of the arrow to release the lock lever, and disconnect the C-28 SRS-ECU connector.

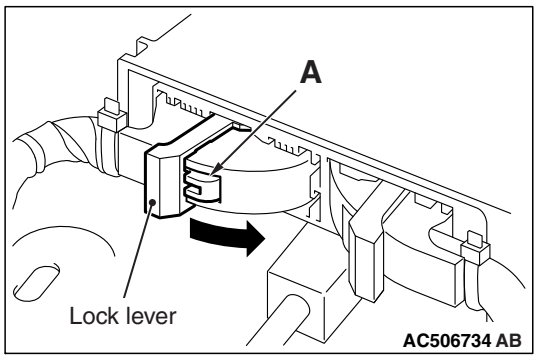

⚠ DANGER

To prevent the air bag from deploying unintentionally, disconnect the passenger's (front) air bag module connector C-11 to short the squib circuit.

(3) Slide the outer housing of passenger's (front) air bag module connector C-11 in the arrow direction shown, and disconnect the connector.

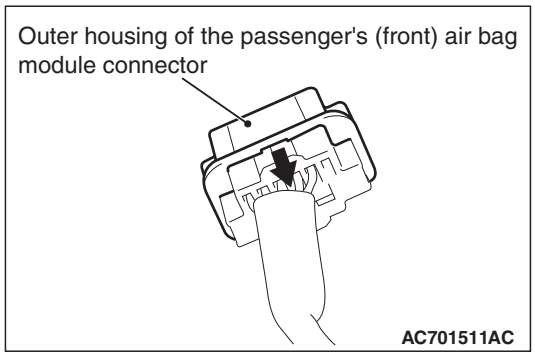

⚠ CAUTION

Insert an insulator such as a cable tie to a depth of 4 mm (0.16 inch) or more, otherwise the short spring will not be released.

(4) Insert a cable tie [3 mm (0.12 inch) wide, 0.5 mm (0.02 inch) thick] between terminals 7 and 8 <1st squib> or 11 and 12 <2nd squib>, and the short spring to release the short spring.

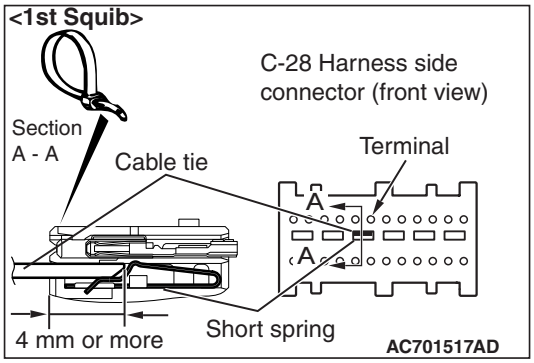

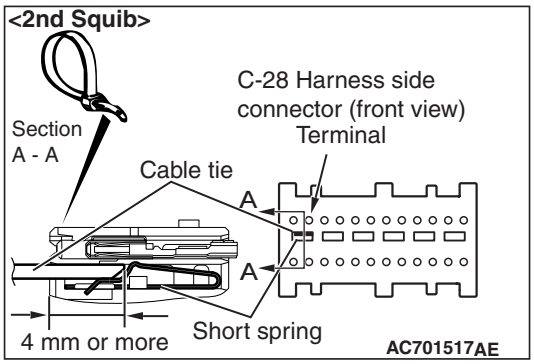

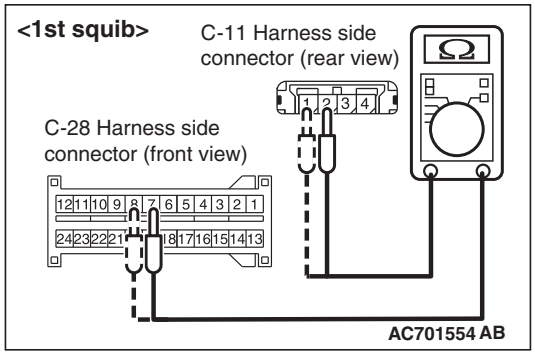

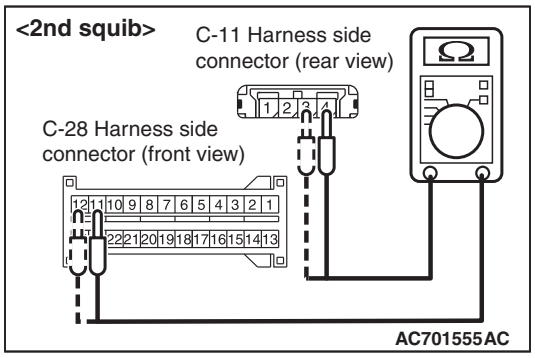

⚠ CAUTION

Do not insert a probe into the terminal from C-11 harness side connector front side directly as the connector contact pressure may be weakened.

(5) Check for continuity between the following terminals. It should be less than 2 ohms.

<1st squib>

- SRS-ECU connector C-28 (terminal No.7) and the passenger's (front) air bag module connector C-11 (terminal No.2)
- SRS-ECU connector C-28 (terminal No.8) and the passenger's (front) air bag module connector C-11 (terminal No.1)

<2nd squib>

- SRS-ECU connector C-28 (terminal No.11) and the passenger's (front) air bag module connector C-11 (terminal No.4)
- SRS-ECU connector C-28 (terminal No.12) and the passenger's (front) air bag module connector C-11 (terminal No.3)

Q: Does continuity exist?

YES : Erase the diagnostic trouble code memory, and check the diagnostic trouble code. If DTC B1B0A <1st squib> or B1B0E <2nd squib> set, replace the SRS-ECU. (Refer to P.52B-440). Then go to Step 5.

NO : Repair the harness wires between SRS-ECU connector C-28 and passenger's (front) air bag module connector C-11. Then go to Step 5.

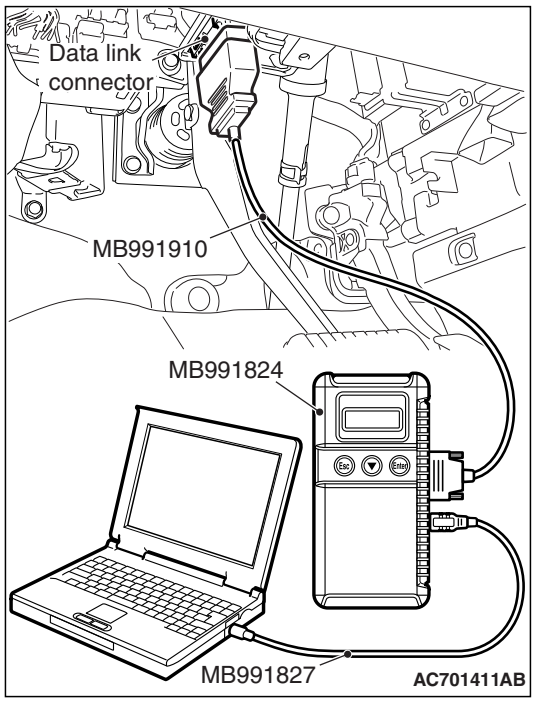

STEP 5. Recheck for diagnostic trouble code.

Check again if the DTC is set.

(1) Erase the DTC.
(2) Turn the ignition switch to the "ON" position.
(3) Check if the DTC is set.
(4) Turn the ignition switch to the "LOCK" (OFF) position.

Q: Is DTC B1B0A <1st squib> or B1B0E <2nd squib> set?

YES : Return to Step 1.

NO : The procedure is complete.

DTC B1B0B: Passenger's (Front) Air Bag Module (1st squib) System (Short Circuit Between Squib Circuit Terminals)
DTC B1B0F: Passenger's (Front) Air Bag Module (2nd squib) System (Short Circuit Between Squib Circuit Terminals)

Passenger's (Front) Air Bag Module (Squib) Circuit

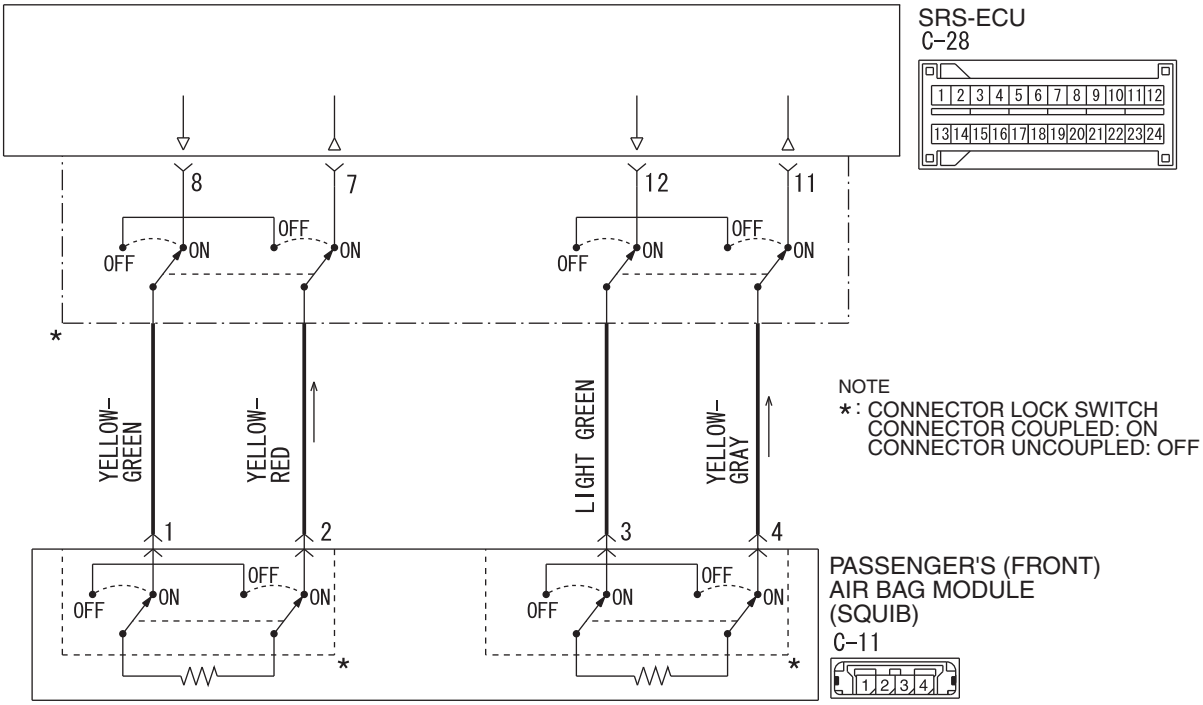

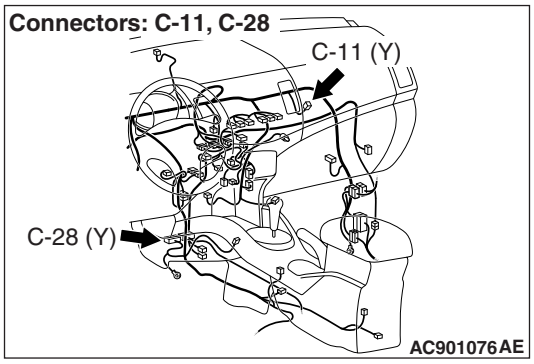

⚠ CAUTION

- **If DTC B1B0B <1st squib> or B1B0F <2nd squib> is set in the SRS-ECU, always diagnose the CAN main bus line.**
- **When DTC B1B0B is set in the following diagnosis, check the 1st squib circuit. When DTC B1B0F is set, check the 2nd squib circuit.**

CIRCUIT OPERATION

- The SRS-ECU judges how severe a collision is by detecting signals from the front impact sensors and the front air bag analog G-sensor. If the impact is over a predetermined level, the SRS-ECU sends an ignition signal. At this time, if the front air bag safing G-sensor is on, the SRS air bag will inflate.
- The ignition signal is input to the air bag module to inflate the air bag.

DTC SET CONDITIONS

This DTC is set if there is abnormal resistance between the input terminals of the passenger's side air bag module (squib).

TROUBLESHOOTING HINTS

- Improper engaged connector or defective short spring*
- Short circuit between the passenger's air bag module (squib) circuit terminals
- Damaged connector(s)
- Malfunction of the SRS-ECU

*NOTE: *: The squib circuit connectors integrate a "short" spring (which prevents the air bag from deploying unintentionally due to static electricity by shorting the positive wire to the ground wire in the squib circuit when the connectors are disconnected). Therefore, if connector C-11 or C-28 is damaged or improperly engaged, the short spring may not be released when the connector is connected.*

DIAGNOSIS

Required Special Tools:

- MB991958: Scan Tool (M.U.T.-III Sub Assembly)
  - MB991824: Vehicle Communication Interface (V.C.I.)
  - MB991827: M.U.T.-III USB Cable
  - MB991910: M.U.T.-III Main Harness A (Vehicles with CAN Communication System)
- MB991865: Dummy resister
- MB991866: Resister harness

STEP 1. Using scan tool MB991958, diagnose the CAN bus line.

⚠ CAUTION

To prevent damage to scan tool MB991958, always turn the ignition switch to the "LOCK" (OFF) position before connecting or disconnecting scan tool MB991958.

(1) Connect scan tool MB991958. Refer to "How to connect the scan tool P.52B-28."
(2) Turn the ignition switch to the "ON" position.
(3) Diagnose the CAN bus line.
(4) Turn the ignition switch to the "LOCK" (OFF) position.

Q: Is the CAN bus line found to be normal?

YES : Go to Step 2.
NO : Repair the CAN bus line (Refer to GROUP 54C, Diagnosis P.54C-17).

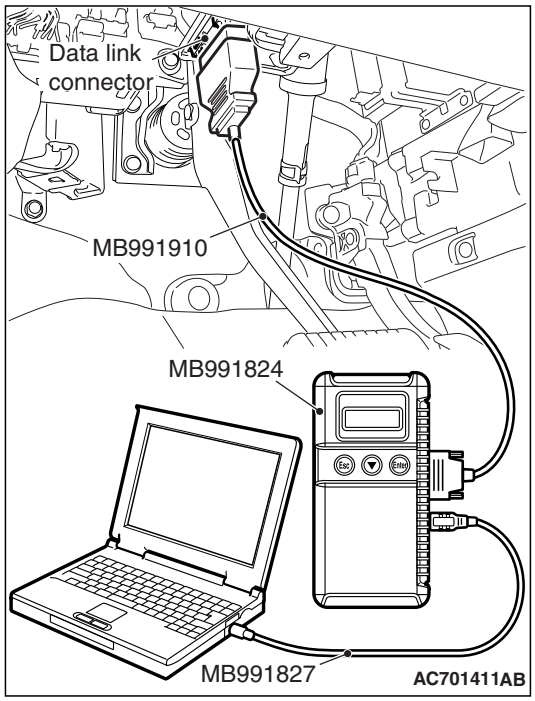

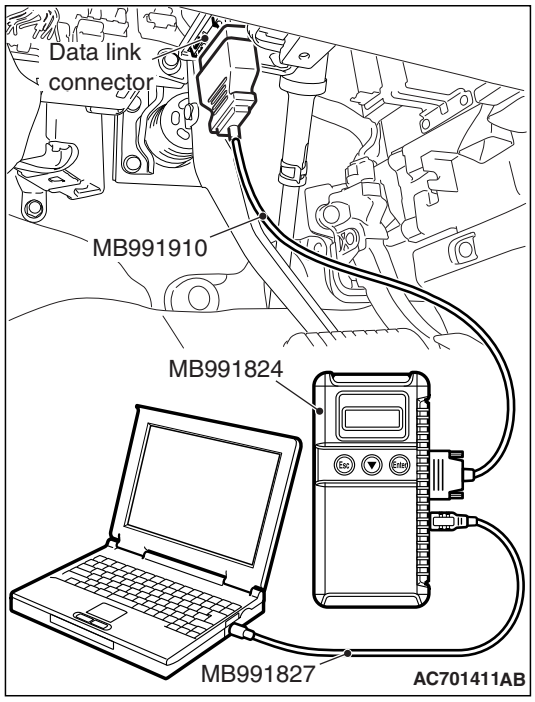

STEP 2. Recheck for diagnostic trouble code.

Check again if the DTC is set.

(1) Erase the DTC.
(2) Turn the ignition switch to the "ON" position.
(3) Check if the DTC is set.
(4) Turn the ignition switch to the "LOCK" (OFF) position.

Q: Is the DTC set?

YES : Go to Step 3.

NO : There is an intermittent malfunction such as poor engaged connector(s) or open circuit (Refer to GROUP 00, How to Cope with Intermittent Malfunction P.00-15).

STEP 3. Check SRS-ECU connector C-28 and passenger's (front) air bag module connector C-11. (Using scan tool MB991958, read the diagnostic trouble code.)

(1) Disconnect the negative battery terminal.
(2) Disconnect connectors C-28 and C-11, and then reconnect them.
- While pushing the part "A" indicated in the figure of the harness side connector, turn the lock lever to the direction of the arrow to release the lock lever, and disconnect the C-28 SRS-ECU connector.

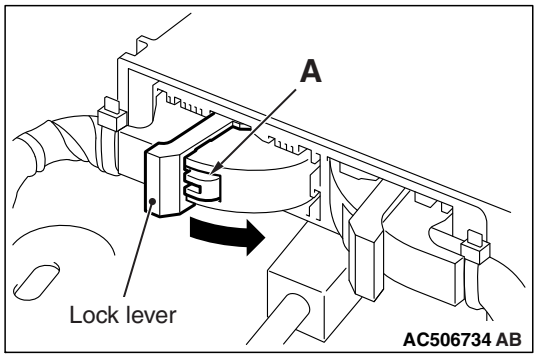

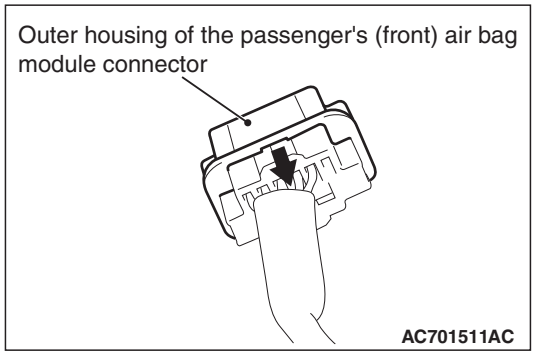

- Slide the outer housing of passenger's (front) air bag module connector C-11 in the arrow direction shown, and disconnect the connector.

(3) Connect the negative battery terminal.
(4) Erase the diagnostic trouble code memory, and check the diagnostic trouble code.

Q: Is DTC B1B0B <1st squib> or B1B0F <2nd squib> set?

YES : Go to Step 4.

NO : The procedure is complete. It is assumed that DTC B1B0B <1st squib> or B1B0F <2nd squib> set as connector C-28 or C-11 was engaged improperly.

STEP 4. Check the passenger's (front) air bag module. (Using scan tool MB991958, read the diagnostic trouble code.)

(1) Disconnect the negative battery terminal.

(2) Slide the outer housing of passenger's (front) air bag module connector C-11 in the arrow direction shown, and disconnect the connector.

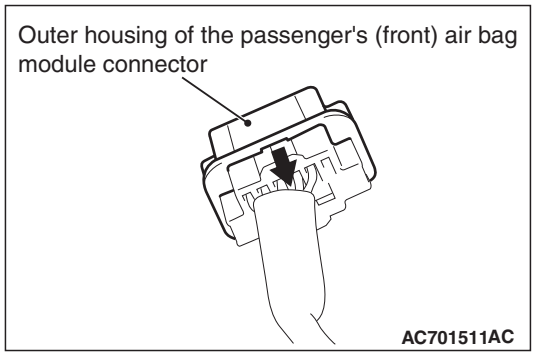

(3) Connect special tool MB991865 to special tool MB991866.

⚠ CAUTION

Do not insert a probe into the terminal from its front side directly as the connector contact pressure may be weakened.

(4) Insert special tool MB991866 into the harness side connector C-11 (terminal No.1 and 2 <1st squib> or terminal No.3 and 4 <2nd squib>) by backprobing.

(5) Connect the negative battery terminal.

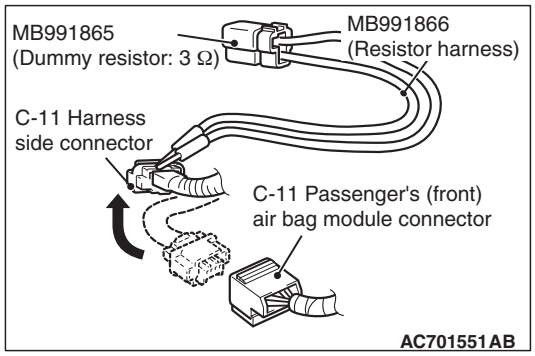

⚠ CAUTION

Always DTC B1B0E is set when checking DTC B1B0B. This is because the second side terminal is isolated when checking it. DTC B1B0E is set but this is not a fault. In addition, always DTC B1B0A is set when checking DTC B1B0F because the first side terminal is isolated.

(6) Erase the diagnostic trouble code memory, and check the diagnostic trouble code.

Q: Is the checked DTC set?

YES : Go to Step 5.

NO : Replace the passenger's air bag module (Refer to P.52B-443). Then go to Step 7.

STEP 5. Check the passenger's (front) air bag module circuit at SRS-ECU connector C-28.

(1) Disconnect the negative battery terminal.

(2) While pushing the part "A" indicated in the figure of the harness side connector, turn the lock lever to the direction of the arrow to release the lock lever, and disconnect the C-28 SRS-ECU connector.

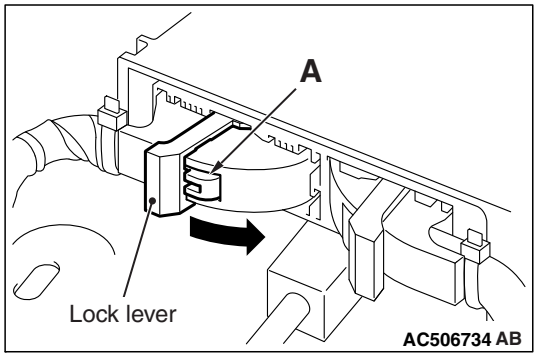

⚠ DANGER

To prevent the air bag from deploying unintentionally, disconnect the passenger's (front) air bag module connector C-11 to short the squib circuit.

(3) Slide the outer housing of passenger's (front) air bag module connector C-11 in the arrow direction shown, and disconnect the connector.

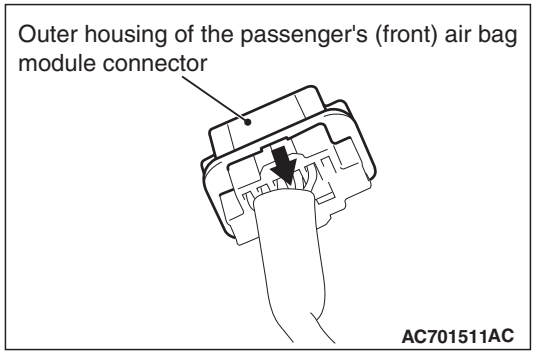

⚠ CAUTION

Insert an insulator such as a cable tie to a depth of 4 mm (0.16 inch) or more, otherwise the short spring will not be released.

(4) Insert a cable tie [3 mm (0.12 inch) wide, 0.5 mm (0.02 inch) thick] between terminals 7 and 8 <1st squib> or 11 and 12 <2nd squib>, and the short spring to release the short spring.

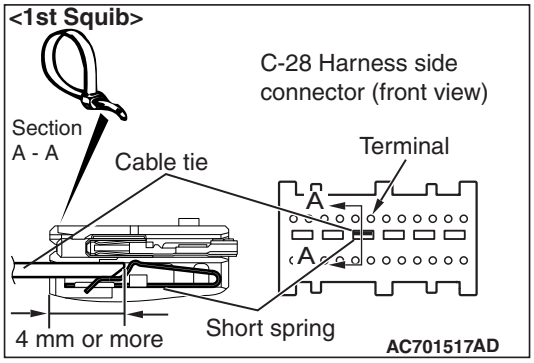

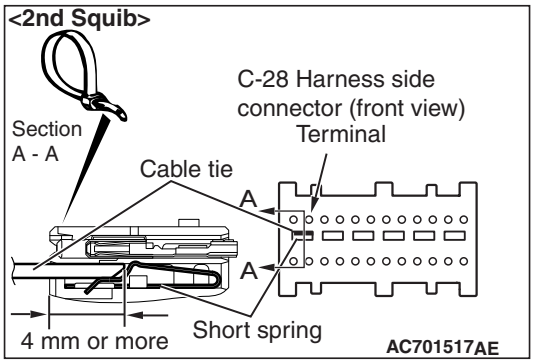

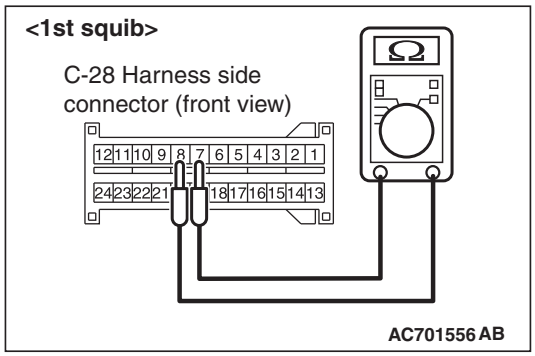

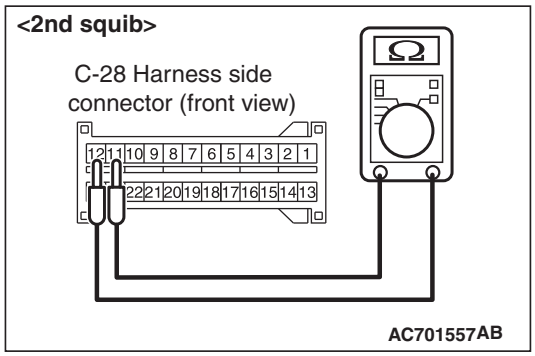

(5) Check for continuity between C-28 harness side connector terminals 7 and 8 <1st squib> or 11 and 12 <2nd squib>. It should be open circuit.

Q: Is it open circuit?

YES : Erase the diagnostic trouble code memory, and check the diagnostic trouble code. If DTC B1B0B <1st squib> or B1B0F <2nd squib> set, replace the SRS-ECU. (Refer to P.52B-440). Go to Step 7.

NO : Go to Step 6.

STEP 6. Check the harness for short circuit between the harness wire and wire.

- SRS-ECU connector C-28 (terminal No.7 and 8) and passenger's (front) air bag module connector C-11 (terminal No.2 and 1) <1st squib>.
- SRS-ECU connector C-28 (terminal No.11 and 12) and passenger's (front) air bag module connector C-11 (terminal No.4 and 3) <2nd squib>.

Q: Is the check result normal?

YES : Go to Step 7.

NO : Repair the harness wires between SRS-ECU connector C-28 and passenger’s (front) air bag module connector C-11. Then go to Step 7.

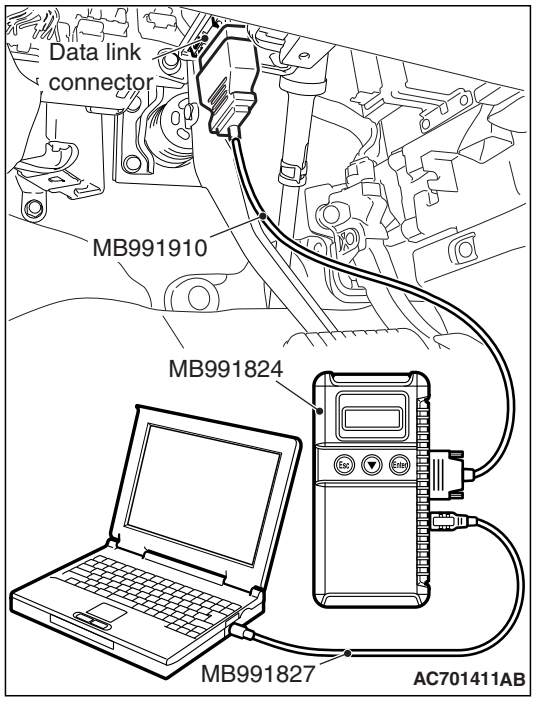

STEP 7. Check for diagnostic trouble code.

Check again if the DTC is set.

(1) Erase the DTC.
(2) Turn the ignition switch to the "ON" position.
(3) Check if the DTC is set.
(4) Turn the ignition switch to the "LOCK" (OFF) position.

Q: Is DTC B1B0B <1st squib> or B1B0F <2nd squib> set?

YES : Return to Step 1.
NO : The procedure is complete.

DTC B1B18: Curtain Air Bag Module (LH) (Squib) System (Shorted to Squib Circuit Ground)

Curtain Air Bag Module (Squib) (LH) Circuit

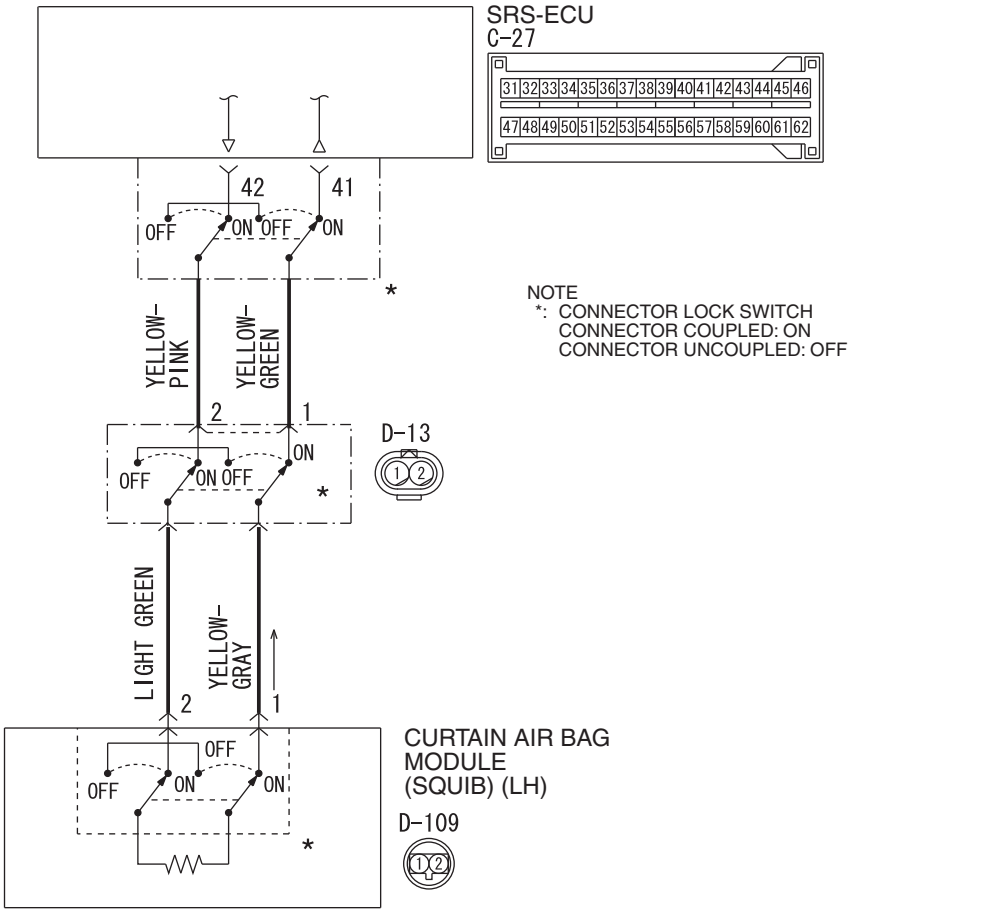

AC709440 AB

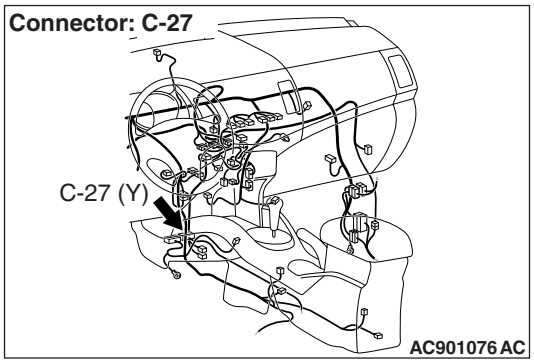

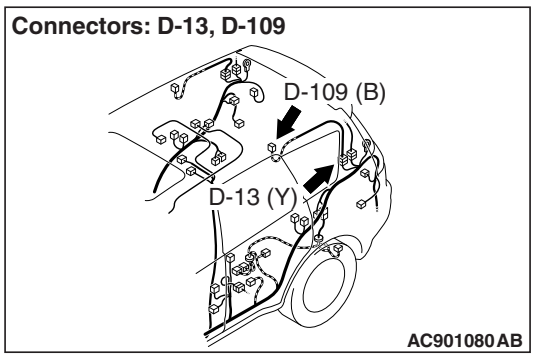

⚠ CAUTION

If DTC B1B18 is set in the SRS-ECU, always diagnose the CAN main bus line.

CIRCUIT OPERATION

- The SRS-ECU judges how severe a collision is by detecting signals from the side impact sensors installed on the lower side of the center pillar and at the quarter panel inner. If the impact is over a predetermined level, the SRS-ECU sends an ignition signal. At this time, if the side collision safing G-sensor is on, the SRS air bag will inflate.
- The ignition signal is input to the curtain air bag module (LH) to inflate the curtain air bag.

TSB Revision

DTC SET CONDITIONS

This DTC is set if there is abnormal resistance between the input terminals of the curtain air bag module (LH) (squib).

TROUBLESHOOTING HITS

- Damaged wiring harnesses or connectors
- Short to the ground in the curtain air bag module (LH) (squib) harness
- Malfunction of the SRS-ECU

DIAGNOSIS

Required Special Tools:

- MB991958: Scan Tool (M.U.T.-III Sub Assembly)
  - MB991824: Vehicle Communication Interface (V.C.I.)
  - MB991827: M.U.T.-III USB Cable
  - MB991910: M.U.T.-III Main Harness A (Vehicles with CAN Communication System)
- MB991865: Dummy resistor
- MB991866: Resister harness

STEP 1. Using scan tool MB991958, diagnose the CAN bus line.

⚠ CAUTION

To prevent damage to scan tool MB991958, always turn the ignition switch to the "LOCK" (OFF) position before connecting or disconnecting scan tool MB991958.

(1) Connect scan tool MB991958. Refer to "How to connect the scan tool P.52B-28."
(2) Turn the ignition switch to the "ON" position.
(3) Diagnose the CAN bus line.
(4) Turn the ignition switch to the "LOCK" (OFF) position.

Q: Is the CAN bus line found to be normal?

YES : Go to Step 2.
NO : Repair the CAN bus line (Refer to GROUP 54C, Diagnosis P.54C-17).

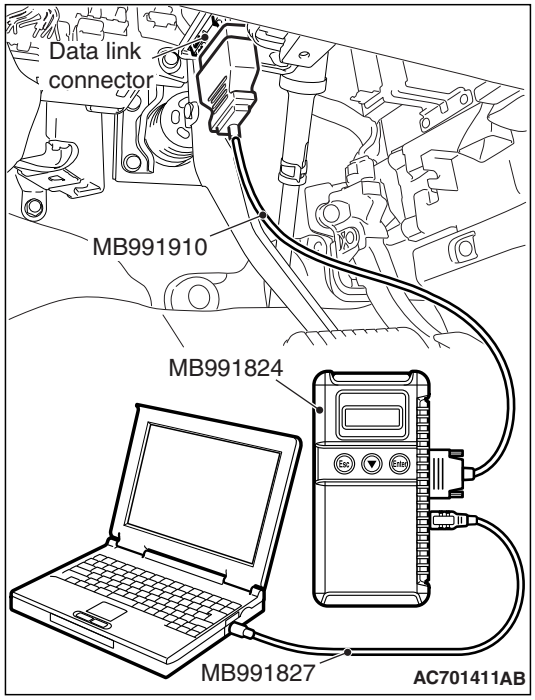

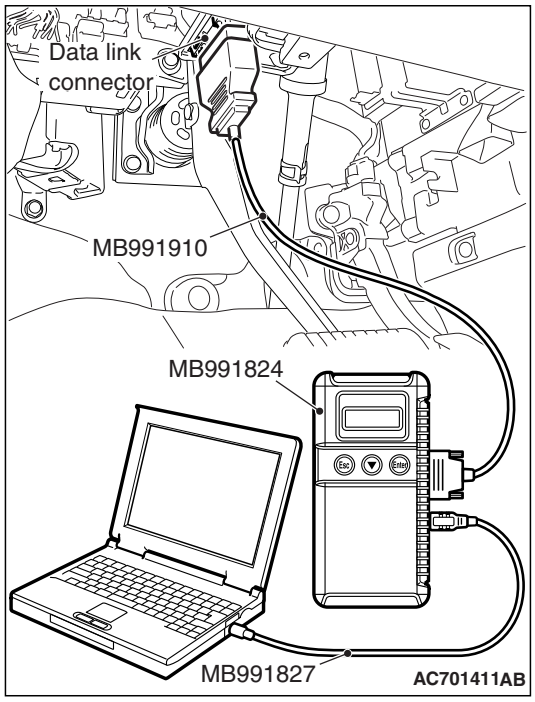

STEP 2. Recheck for diagnostic trouble code.

Check again if the DTC is set.

(1) Erase the DTC.
(2) Turn the ignition switch to "ON" position.
(3) Check if the DTC is set.
(4) Turn the ignition switch to the "LOCK" (OFF) position.

Q: Is the DTC set?

YES : Go to Step 3.
NO : There is an intermittent malfunction such as poor engaged connector(s) or open circuit (Refer to GROUP 00, How to Use Troubleshooting/Inspection Service Points –How to Cope with Intermittent Malfunctions P.00-15).

STEP 3. Check by dummy resistor connection. (Using scan tool MB991958, read the diagnostic trouble code.)

(1) Disconnect the negative battery terminal.
(2) Disconnect the D-13 intermediate connector, unlock the connector by sliding the locking button to the direction of the arrow as shown in the figure, and then disconnect the connector.

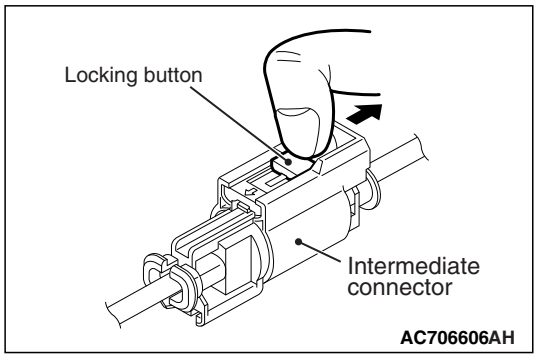

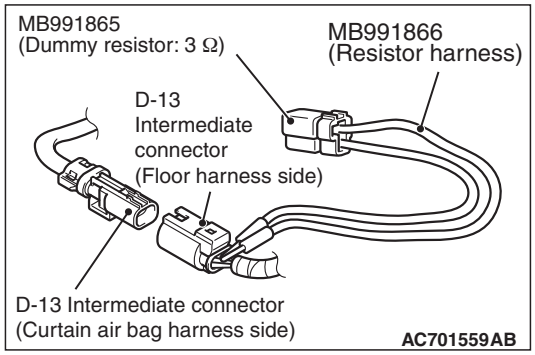

(3) Connect special tool MB991865 to special tool MB991866.

⚠ CAUTION

Do not insert a probe into the terminal from its front side directly, as the connector contact pressure may be weakened.

(4) Insert the probe of resistor harness, to which the dummy resistor is installed, from the back of D-13 intermediate connector (floor harness side).
(5) Connect the negative battery terminal.
(6) After erasing the diagnostic trouble code memory, check the diagnostic trouble code again.
(7) Disconnect the negative battery terminal.

Q: Is DTC B1B18 set?

YES : Go to Step 4.
NO : Go to Step 5.

STEP 4. Resistance measurement at the C-27 SRS-ECU connector.

(1) Disconnect the negative battery terminal.

(2) While pushing the part "A" indicated in the figure of the harness side connector, turn the lock lever to the direction of the arrow to release the lock lever, and disconnect the C-27 SRS-ECU connector.

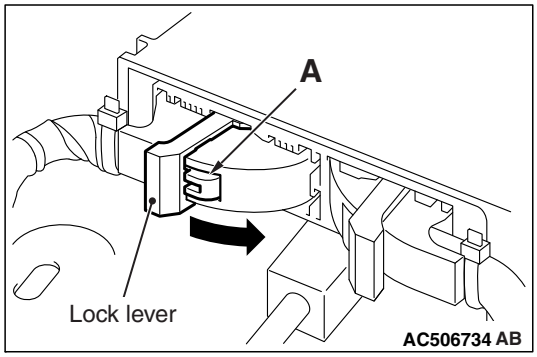

⚠ *DANGER*

To prevent the air bag from deploying unintentionally, disconnect the intermediate connector D-13 to short the squib circuit.

(3) Disconnect the D-13 intermediate connector, unlock the connector by sliding the locking button to the direction of the arrow as shown in the figure, and then disconnect the connector.

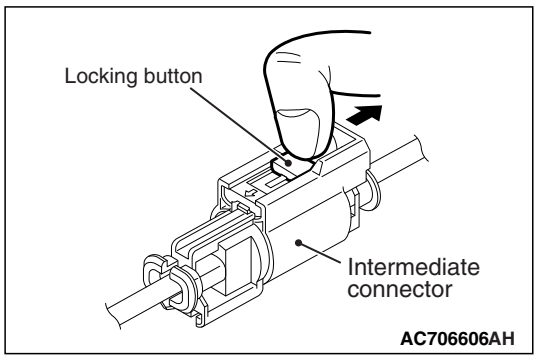

⚠ CAUTION

The short spring may not be released due to the insufficient insertion. Therefore, insert the insulator for 4 mm (0.6 inch) or more.

(4) Insert a cable tie [3 mm (0.12 inch) wide, 0.5 mm (0.02 inch) thick] between terminal 41, 42 and the short spring to release the short spring.

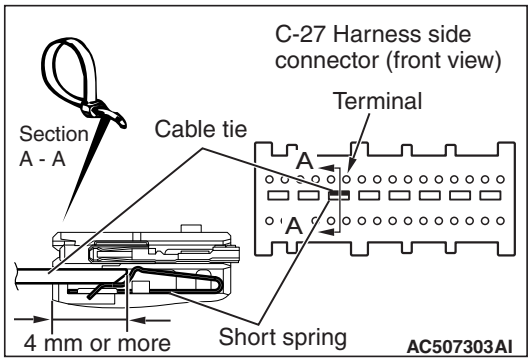

(5) Check for continuity between C-27 wiring harness side connector terminal No. 41, 42 and body ground.
It should be open circuit.

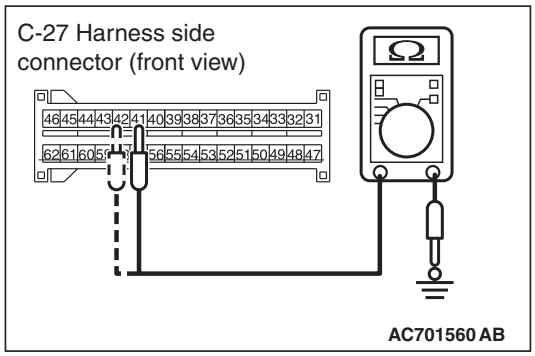

Q: Is it open circuit?

YES : Go to Step 6.

NO : Repair the wiring harness.

STEP 5. Resistance measurement at the D-13 intermediate connector.

(1) Disconnect the negative battery terminal.

⚠ DANGER

To prevent the air bag from deploying unintentionally, disconnect the curtain air bag module connector D-109 to short the squib circuit.

(2) Disconnect curtain air bag module (LH) D-109. Use a flat-tipped screwdriver to unlock the locking button at the harness side connector by withdrawing it toward you in two stages, and then disconnect the connector.

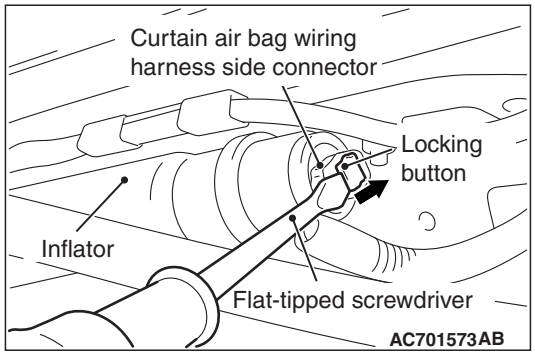

(3) Disconnect the D-13 intermediate connector, unlock the connector by sliding the locking button to the direction of the arrow as shown in the figure, and then disconnect the connector.

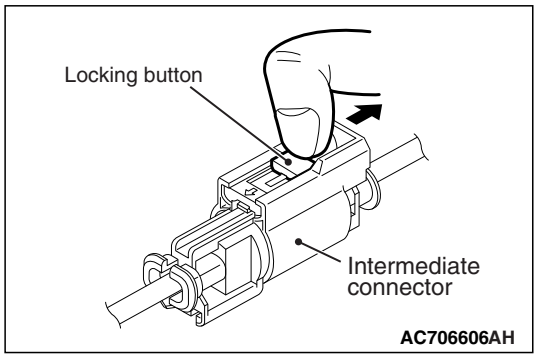

(4) Because the short spring is installed to the D-13 intermediate connector (curtain air bag harness side), insert a cable tie [3 mm (0.12 inch) wide, 0.5 mm (0.02 inch) thick] between terminals 1, 2 and the short spring to release the short spring.

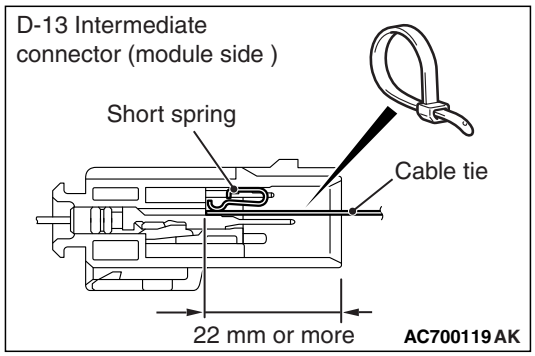

⚠ CAUTION

Do not insert a probe into the terminal from its front side directly as the connector contact pressure may be weakened.

(5) Check for continuity between the D-13 intermediate connector (module side) terminal No. 1, 2 and the body ground.
It should be open circuit.

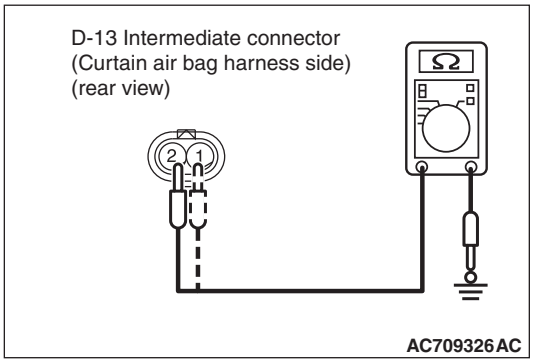

Q: Is it open circuit?

YES : Replace the curtain air bag module (squib) (Refer to P.52B-457).

NO : Repair the wiring harness.

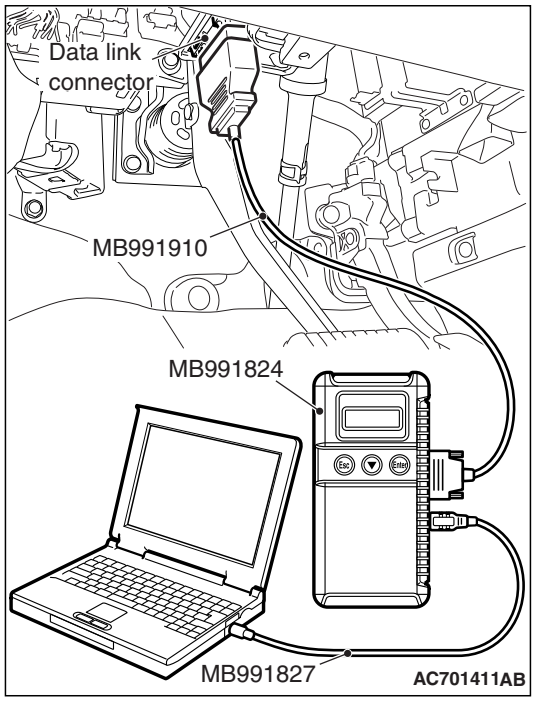

STEP 6. Recheck for diagnostic trouble code.

Check again if the DTC is set.

(1) Erase the DTC.
(2) Turn the ignition switch to the "ON" position.
(3) Check if the DTC is set.
(4) Turn the ignition switch to the "LOCK" (OFF) position.

Q: Is DTC B1B18 set?

YES : Replace SRS-ECU. (Refer to P.52B-440.)

NO : Intermittent Malfunction (Refer to GROUP 00, How to Use Troubleshooting/Inspection Service Points –How to Cope with Intermittent Malfunction P.00-15).

DTC B1B19: Curtain Air bag Module (LH) (Squib) System (Shorted to Squib Circuit Power Supply)

Curtain Air Bag Module (Squib) (LH) Circuit

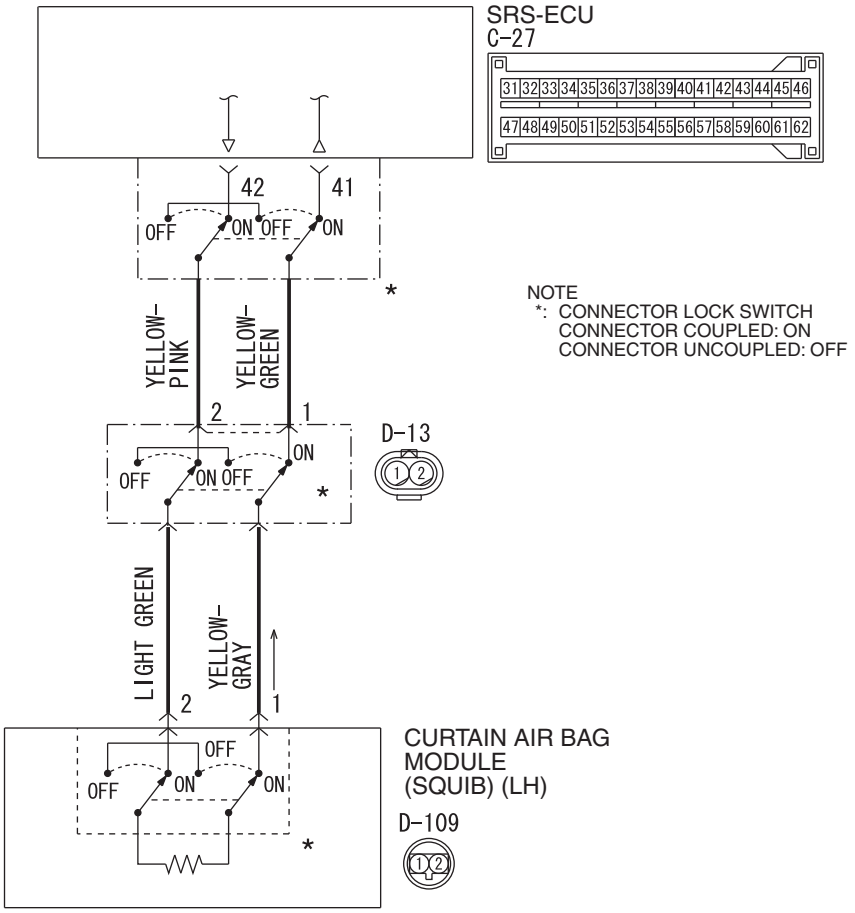

AC709440 AB

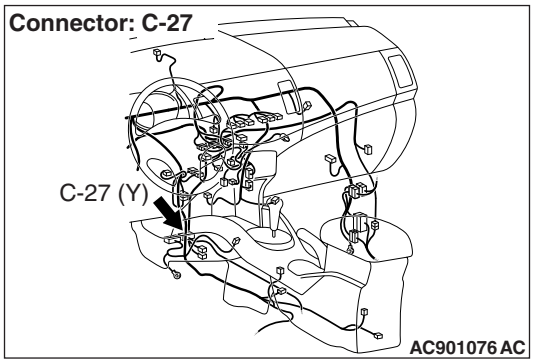

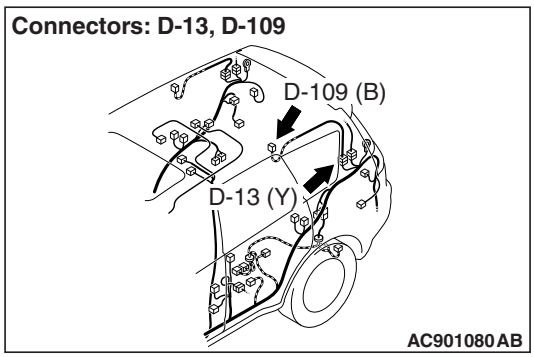

⚠ CAUTION

If DTC B1B19 is set in the SRS-ECU, always diagnose the CAN main bus line.

CIRCUIT OPERATION

- The SRS-ECU judges how severe a collision is by detecting signals from the side impact sensors installed on the lower side of the center pillar and at the quarter panel inner. If the impact is over a predetermined level, the SRS-ECU sends an ignition signal. At this time, if the side collision safing G-sensor is on, the SRS air bag will inflate.
- The ignition signal is input to the curtain air bag module (LH) to inflate the curtain air bag.

TSB Revision

DTC SET CONDITIONS

This DTC is set if there is abnormal resistance between the input terminals of the curtain air bag module (LH) (squib).

TROUBLESHOOTING HITS

- Damaged wiring harnesses or connectors
- Short to the power supply in the curtain air bag module (LH) (squib) harness
- Malfunction of the SRS-ECU

DIAGNOSIS

Required Special Tools:

- MB991958: Scan Tool (M.U.T.-III Sub Assembly)
  - MB991824: Vehicle Communication Interface (V.C.I.)
  - MB991827: M.U.T.-III USB Cable
  - MB991910: M.U.T.-III Main Harness A (Vehicles with CAN Communication System)
- MB991865: Dummy resistor
- MB991866: Resister harness

STEP 1. Using scan tool MB991958, diagnose the CAN bus line.

⚠ CAUTION

To prevent damage to scan tool MB991958, always turn the ignition switch to the "LOCK" (OFF) position before connecting or disconnecting scan tool MB991958.

(1) Connect scan tool MB991958. Refer to "How to connect the scan tool P.52B-28."
(2) Turn the ignition switch to the "ON" position.
(3) Diagnose the CAN bus line.
(4) Turn the ignition switch to the "LOCK" (OFF) position.

Q: Is the CAN bus line found to be normal?

YES : Go to Step 2.
NO : Repair the CAN bus line (Refer to GROUP 54C, Diagnosis P.54C-17).

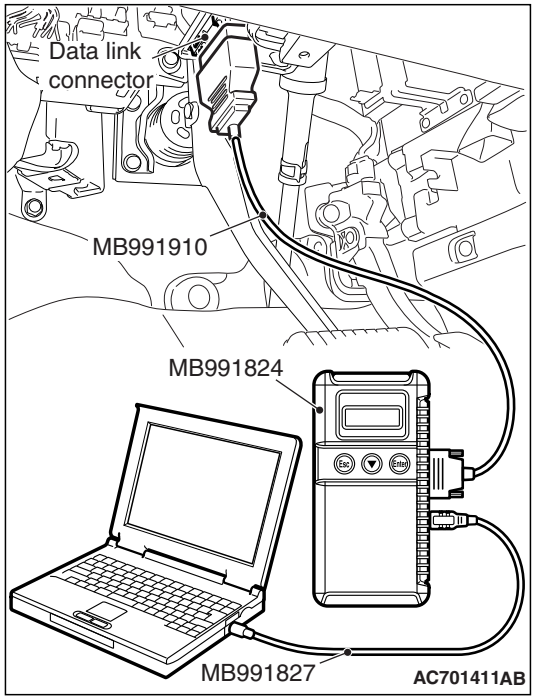

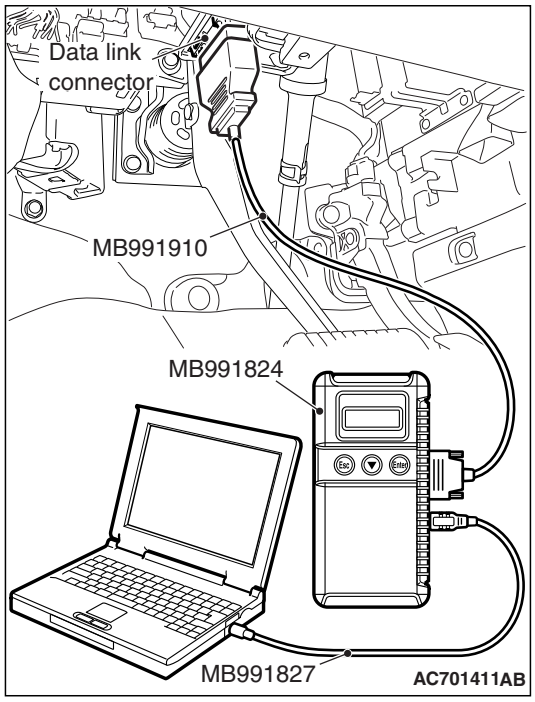

STEP 2. Recheck for diagnostic trouble code.

Check again if the DTC is set.

(1) Erase the DTC.
(2) Turn the ignition switch to "ON" position.
(3) Check if the DTC is set.
(4) Turn the ignition switch to the "LOCK" (OFF) position.

Q: Is the DTC set?

YES : Go to Step 3.

NO : There is an intermittent malfunction such as poor engaged connector(s) or open circuit (Refer to GROUP 00, How to Use Troubleshooting/Inspection Service Points –How to Cope with Intermittent Malfunctions P.00-15).

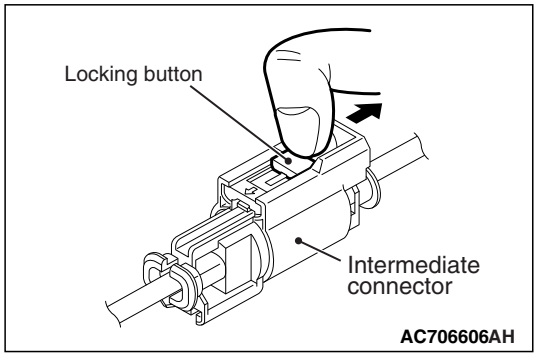

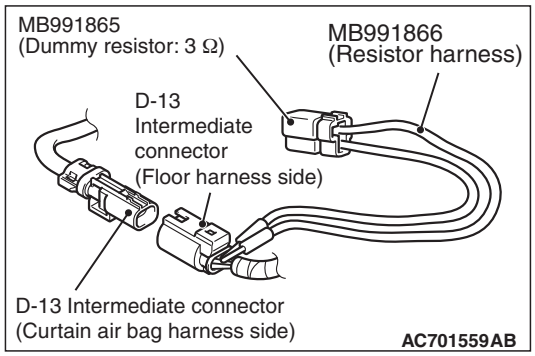

STEP 3. Check by dummy resistor connection. (Using scan tool MB991958, read the diagnostic trouble code.)

(1) Disconnect the negative battery terminal.
(2) Disconnect the D-13 intermediate connector, unlock the connector by sliding the locking button to the direction of the arrow as shown in the figure, and then disconnect the connector.
(3) Connect special tool MB991865 to special tool MB991866.

⚠ CAUTION

Do not insert a probe into the terminal from its front side directly, as the connector contact pressure may be weakened.

(4) Insert the probe of resistor harness, to which the dummy resistor is installed, from the back of D-13 intermediate connector (floor harness side).
(5) Connect the negative battery terminal.
(6) After erasing the diagnostic trouble code memory, check the diagnostic trouble code again.
(7) Disconnect the negative battery terminal.

Q: Is DTC B1B19 set?

YES : Go to Step 4.

NO : Go to Step 5.

STEP 4. Voltage measurement at the C-27 SRS-ECU connector.

(1) Disconnect the negative battery terminal.
(2) While pushing the part "A" indicated in the figure of the harness side connector, turn the lock lever to the direction of the arrow to release the lock lever, and disconnect the C-27 SRS-ECU connector.

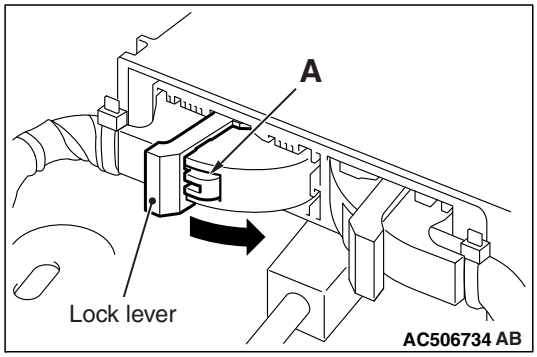

⚠ *DANGER*

To prevent the air bag from deploying unintentionally, disconnect the intermediate connector D-13 to short the squib circuit.

(3) Disconnect the D-13 intermediate connector, unlock the connector by sliding the locking button to the direction of the arrow as shown in the figure, and then disconnect the connector.

⚠ CAUTION

The short spring may not be released due to the insufficient insertion. Therefore, insert the insulator for 4 mm (0.6 inch) or more.

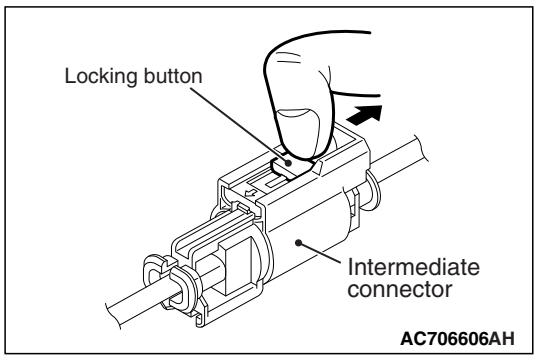

(4) Insert a cable tie [3 mm (0.12 inch) wide, 0.5 mm (0.02 inch) thick] between terminal 41, 42 and the short spring to release the short spring.
(5) Connect the negative battery terminal.
(6) Ignition switch: ON

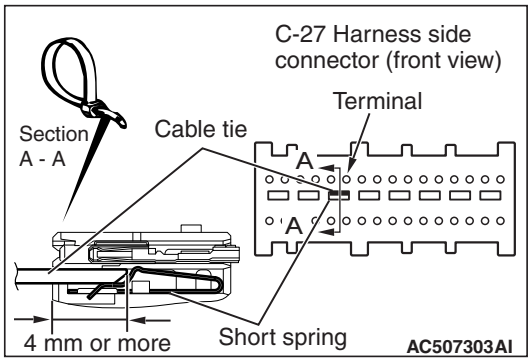

(7) Measure the voltage between the C-27 wiring harness side connector terminal No. 41, 42 and body ground.
Voltage should measure 1 volt or less.

Q: Is the measured voltage within the specified range?

YES : Go to Step 6.
NO : Repair the wiring harness.

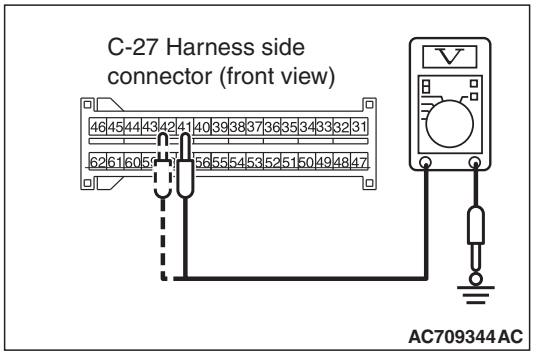

STEP 5. Voltage measurement at the D-13 intermediate connector.

(1) Disconnect the negative battery terminal.

⚠ DANGER

To prevent the air bag from deploying unintentionally, disconnect the curtain air bag module connector D-109 to short the squib circuit.

(2) Disconnect curtain air bag module (LH) D-109. Use a flat-tipped screwdriver to unlock the locking button at the harness side connector by withdrawing it toward you in two stages, and then disconnect the connector.

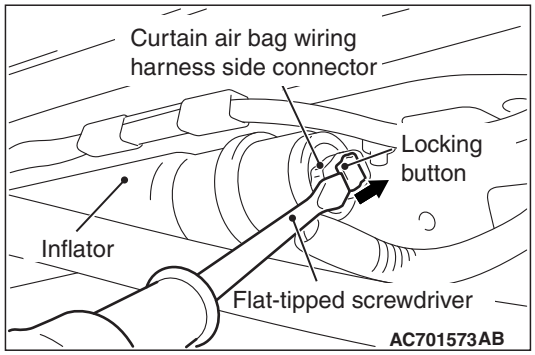

(3) Disconnect the D-13 intermediate connector, unlock the connector by sliding the locking button to the direction of the arrow as shown in the figure, and then disconnect the connector.

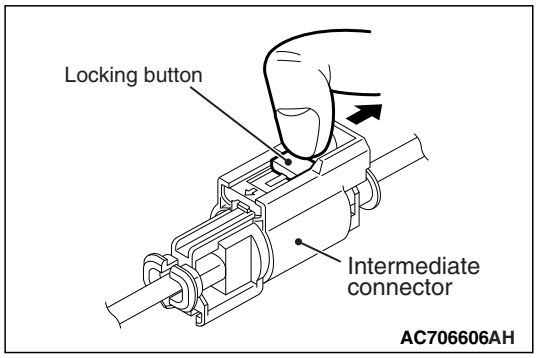

(4) Because the short spring is installed to the D-13 intermediate connector (curtain air bag harness side), insert a cable tie [3 mm (0.12 inch) wide, 0.5 mm (0.02 inch) thick] between terminals 1, 2 and the short spring to release the short spring.

(5) Connect the negative battery terminal.

(6) Ignition switch: ON

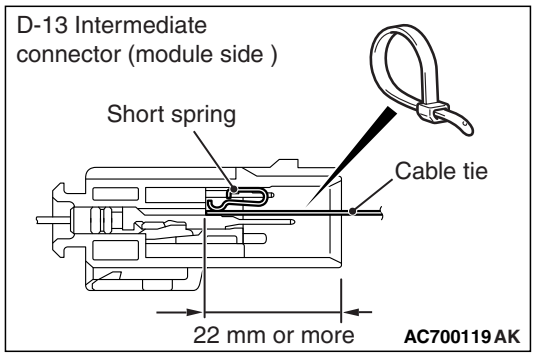

⚠ CAUTION

Do not insert a probe into the terminal from its front side directly, as the connector contact pressure may be weakened.

(7) Check for continuity between the D-13 intermediate connector (curtain air bag harness side) terminal No. 1, 2 and the body ground.
Voltage should measure 1 volt or less.

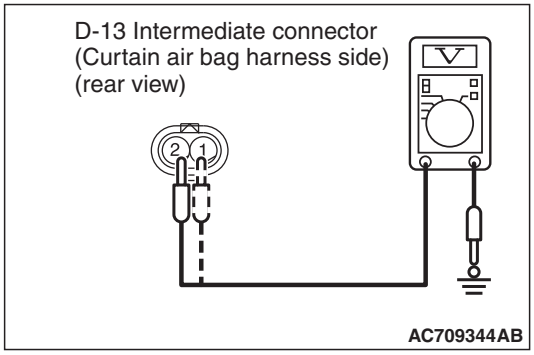

Q: Is the measured voltage within the specified range?

YES : Replace the curtain air bag module (squib) (Refer to P.52B-457).

NO : Repair the wiring harness.

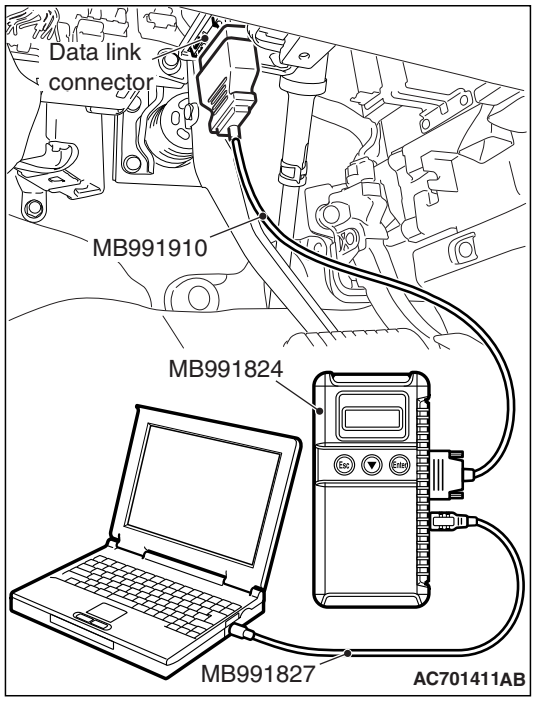

STEP 6. Recheck for diagnostic trouble code.

Check again if the DTC is set.

(1) Erase the DTC.
(2) Turn the ignition switch to the "ON" position.
(3) Check if the DTC is set.
(4) Turn the ignition switch to the "LOCK" (OFF) position.

Q: Is DTC B1B19 set?

YES : Replace SRS-ECU. (Refer to P.52B-440.)

NO : Intermittent Malfunction (Refer to GROUP 00, How to Use Troubleshooting/Inspection Service Points –How to Cope with Intermittent Malfunction P.00-15).

DTC B1B1A: Curtain Air Bag Module (LH) (Squib) System (Squib Circuit Open)

Curtain Air Bag Module (Squib) (LH) Circuit

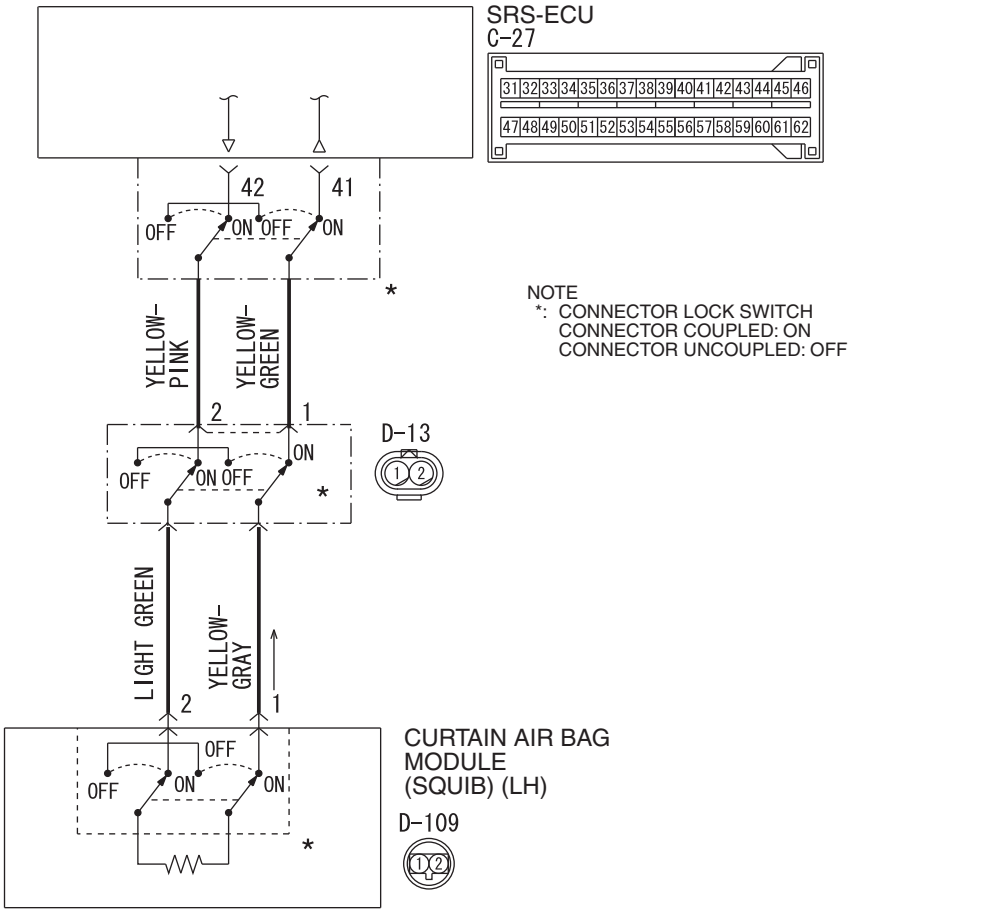

AC709440 AB

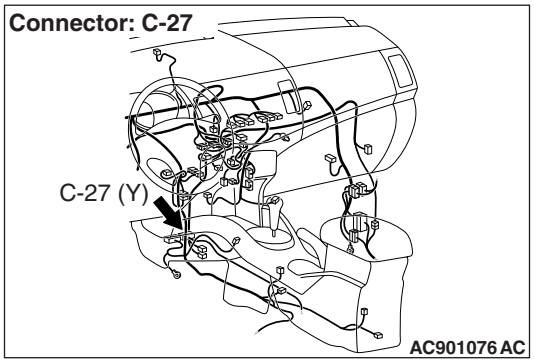

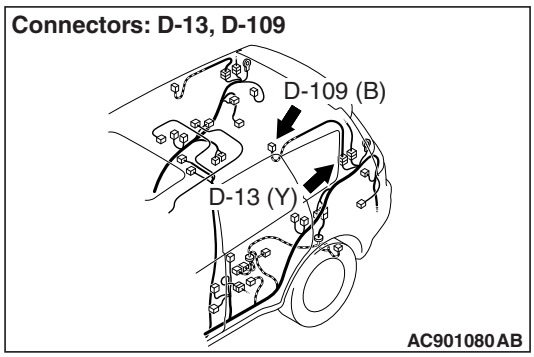

⚠ CAUTION

If DTC B1B1A is set in the SRS-ECU, always diagnose the CAN main bus line.

CIRCUIT OPERATION

- The SRS-ECU judges how severe a collision is by detecting signals from the side impact sensors installed on the lower side of the center pillar and at the quarter panel inner. If the impact is over a predetermined level, the SRS-ECU sends an ignition signal. At this time, if the side collision safing G-sensor is on, the SRS air bag will inflate.
- The ignition signal is input to the curtain air bag module (LH) to inflate the curtain air bag.

DTC SET CONDITIONS

This DTC is set if there is abnormal resistance between the input terminals of the curtain air bag module (LH) (squib).

TROUBLESHOOTING HITS

- Open circuit in the curtain air bag module (LH) (squib) circuit
- Improper connector contact
- Malfunction of the SRS-ECU

DIAGNOSIS

Required Special Tools:

- MB991958: Scan Tool (M.U.T.-III Sub Assembly)
  - MB991824: Vehicle Communication Interface (V.C.I.)
  - MB991827: M.U.T.-III USB Cable
  - MB991910: M.U.T.-III Main Harness A (Vehicles with CAN Communication System)
- MB991865: Dummy resistor
- MB991866: Resister harness
- MB991884: Resister harness

STEP 1. Using scan tool MB991958, diagnose the CAN bus line.

⚠ CAUTION

To prevent damage to scan tool MB991958, always turn the ignition switch to the "LOCK" (OFF) position before connecting or disconnecting scan tool MB991958.

(1) Connect scan tool MB991958. Refer to "How to connect the scan tool P.52B-28."
(2) Turn the ignition switch to the "ON" position.
(3) Diagnose the CAN bus line.
(4) Turn the ignition switch to the "LOCK" (OFF) position.

Q: Is the CAN bus line found to be normal?

YES : Go to Step 2.
NO : Repair the CAN bus line (Refer to GROUP 54C, Diagnosis P.54C-17).

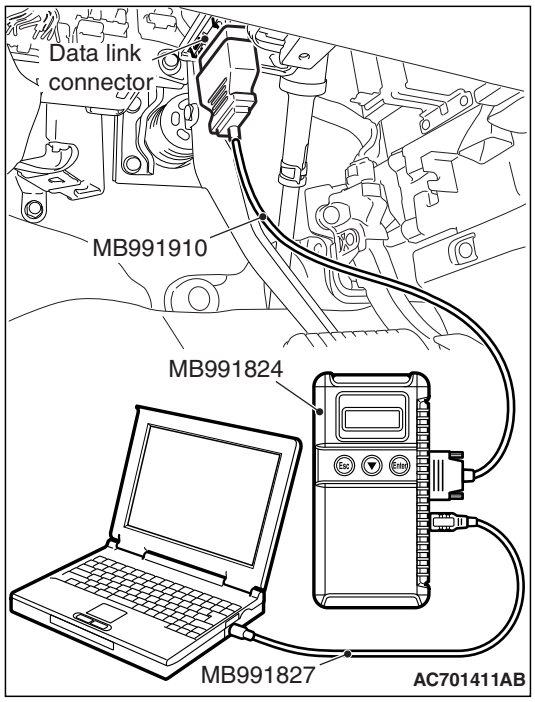

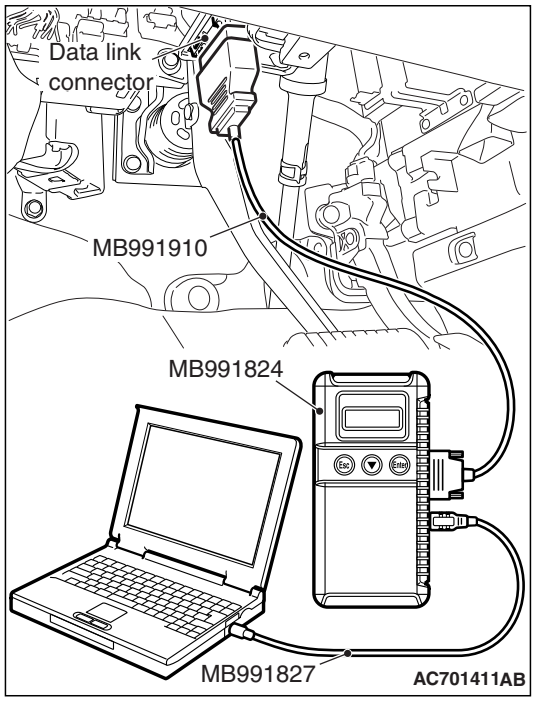

STEP 2. Recheck for diagnostic trouble code.

Check again if the DTC is set.

(1) Erase the DTC.
(2) Turn the ignition switch to "ON" position.
(3) Check if the DTC is set.
(4) Turn the ignition switch to the "LOCK" (OFF) position.

Q: Is the DTC set?

YES : Go to Step 3.
NO : There is an intermittent malfunction such as poor engaged connector(s) or open circuit (Refer to GROUP 00, How to Use Troubleshooting/Inspection Service Points –How to Cope with Intermittent Malfunctions P.00-15).

STEP 3. Check by dummy resistor connection. (Using scan tool MB991958, read the diagnostic trouble code.)

(1) Disconnect the negative battery terminal.
(2) Disconnect the D-13 intermediate connector, unlock the connector by sliding the locking button to the direction of the arrow as shown in the figure, and then disconnect the connector.

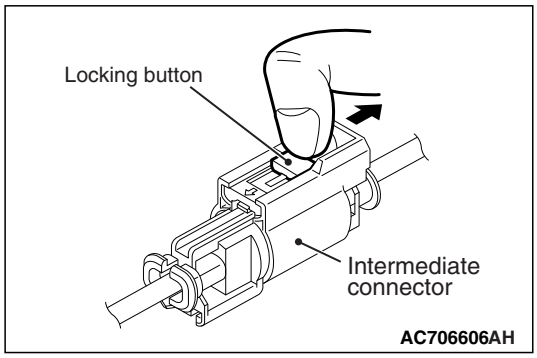

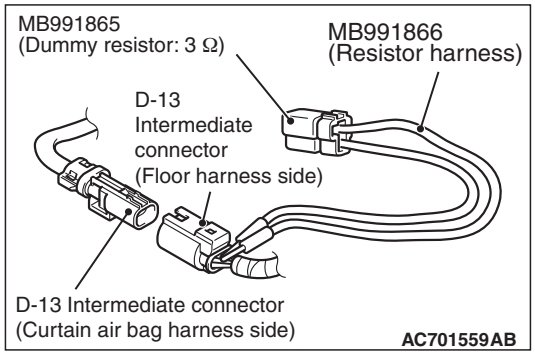

(3) Connect special tool MB991865 to special tool MB991866.

⚠ CAUTION

Do not insert a probe into the terminal from its front side directly, as the connector contact pressure may be weakened.

(4) Insert the probe of resistor harness, to which the dummy resistor is installed, from the back of D-13 intermediate connector (floor harness side).
(5) Connect the negative battery terminal.
(6) After erasing the diagnostic trouble code memory, check the diagnostic trouble code again.
(7) Disconnect the negative battery terminal.

Q: Is DTC B1B1A set?

YES : Go to Step 4.
NO : Go to Step 5.

STEP 4. Resistance measurement at the C-27 SRS-ECU connector and the D-13 intermediate connector.

(1) Disconnect the negative battery terminal.

(2) While pushing the part "A" indicated in the figure of the harness side connector, turn the lock lever to the direction of the arrow to release the lock lever, and disconnect the C-27 SRS-ECU connector.

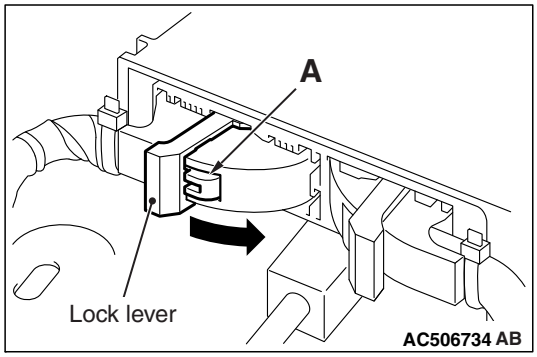

⚠ ***DANGER***

To release the SRS-ECU connector short spring in the following operations, disconnect this intermediate connector, and keep the squib circuit shorted.

(3) Disconnect the D-13 intermediate connector, unlock the connector by sliding the locking button to the direction of the arrow as shown in the figure, and then disconnect the connector.

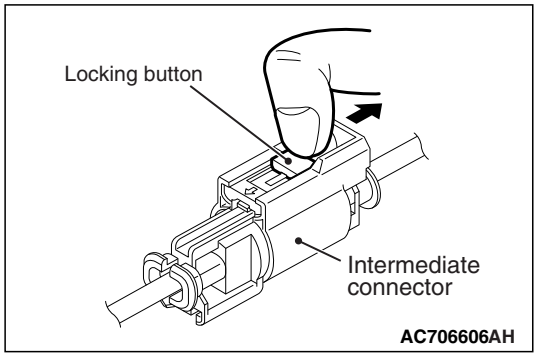

⚠ **CAUTION**

The short spring may not be released due to the insufficient insertion. Therefore, insert the insulator for 4 mm (0.6 inch) or more.

(4) Insert a cable tie [3 mm (0.12 inch) wide, 0.5 mm (0.02 inch) thick] between terminal 41, 42 and the short spring to release the short spring.

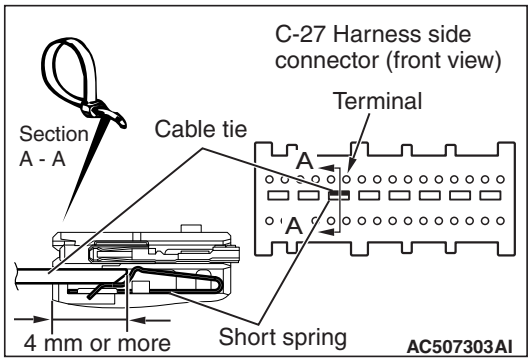

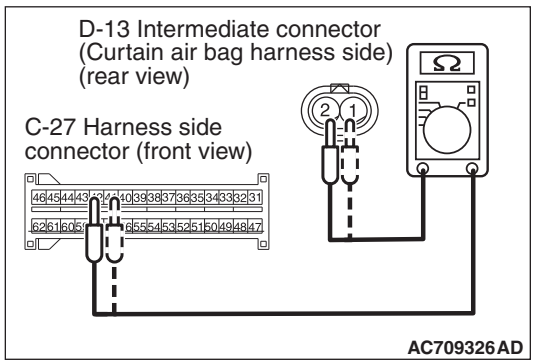

⚠ CAUTION

Do not insert a probe into the terminal from D-13 intermediate connector front side directly, as the connector contact pressure may be weakened.

(5) Check for continuity between the following terminals. It should be less than 2 ohms.
- SRS-ECU connector C-27 (terminal No.41) and the intermediate connector D-13 (terminal No.1)
- SRS-ECU connector C-27 (terminal No.42) and the intermediate connector D-13 (terminal No.2)

Q: Does continuity exist?

YES : Go to Step 6.

NO : Repair the wiring harness between the C-27 harness side connector terminal No. 41, 42 and the D-13 intermediate connector (floor harness side) terminal No. 1, 2.

STEP 5. Resistance measurement at the D-13 intermediate connector terminal No. 1, 2 and the D-109 curtain air bag module harness side connector terminal No. 1, 2.

(1) Disconnect the negative battery terminal.

⚠ DANGER

To prevent the air bag from deploying unintentionally, disconnect the curtain air bag module connector D-109 to short the squib circuit.

(2) Disconnect curtain air bag module (LH) D-109. Use a flat-tipped screwdriver to unlock the locking button at the harness side connector by withdrawing it toward you in two stages, and then disconnect the connector.

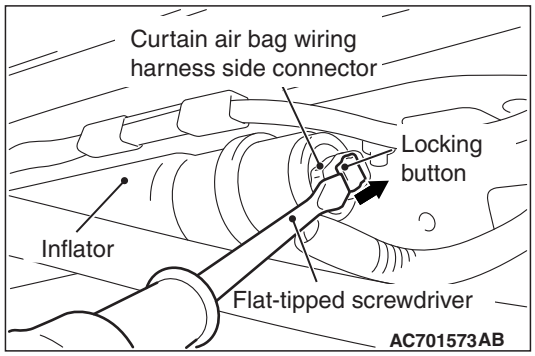

(3) Disconnect the D-13 intermediate connector, unlock the connector by sliding the locking button to the direction of the arrow as shown in the figure, and then disconnect the connector.

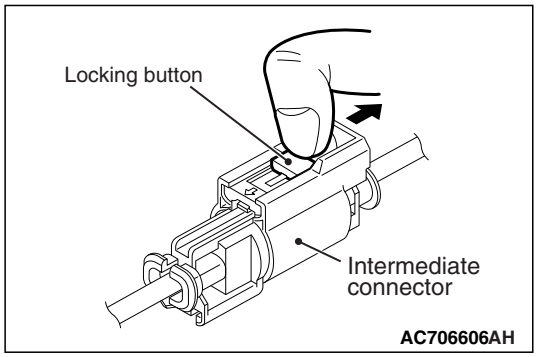

(4) Because the short spring is installed to the D-13 intermediate connector (curtain air bag harness side), insert a cable tie [3 mm (0.12 inch) wide, 0.5 mm (0.02 inch) thick] between terminals 1, 2 and the short spring to release the short spring.

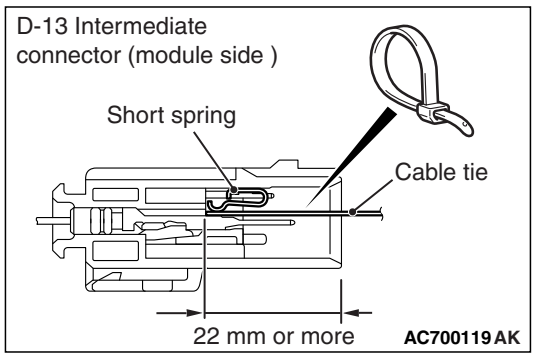

(5) Connect special tool MB991884 to the removed D-109 harness side connector.

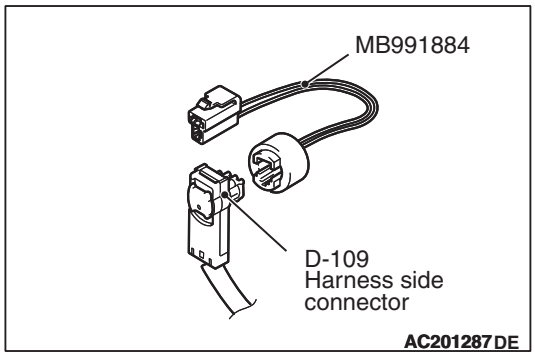

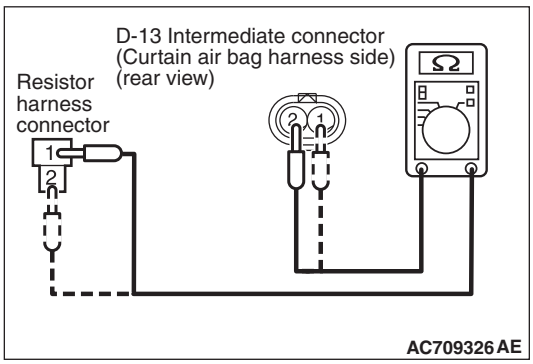

⚠ CAUTION

Do not insert a probe into the terminal from D-13 intermediate connector front side directly, as the connector contact pressure may be weakened.

(6) Check for continuity between the following terminals. It should be less than 2 ohms.
- Intermediate connector D-13 (terminal No.1) and resistor harness connector terminal No.2)
- Intermediate connector D-13 (terminal No.2) and resistor harness connector terminal No.1)

Q: Is the check result normal?

YES : Replace the curtain air bag module (squib) (Refer to P.52B-457).

NO : Repair the wiring harness.

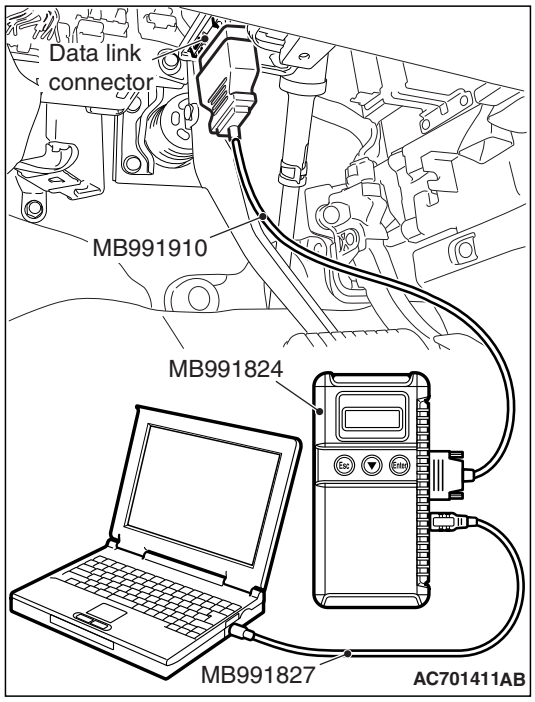

STEP 6. Recheck for diagnostic trouble code.

Check again if the DTC is set.

(1) Erase the DTC.
(2) Turn the ignition switch to the "ON" position.
(3) Check if the DTC is set.
(4) Turn the ignition switch to the "LOCK" (OFF) position.

Q: Is DTC B1B1A set?

YES : Replace SRS-ECU. (Refer to P.52B-440.)

NO : Intermittent Malfunction (Refer to GROUP 00, How to Use Troubleshooting/Inspection Service Points –How to Cope with Intermittent Malfunction P.00-15).

DTC B1B1B: Curtain Air Bag Module (LH) (Squib) System (Short Circuit between Squib Circuit Terminals)

Curtain Air Bag Module (Squib) (LH) Circuit

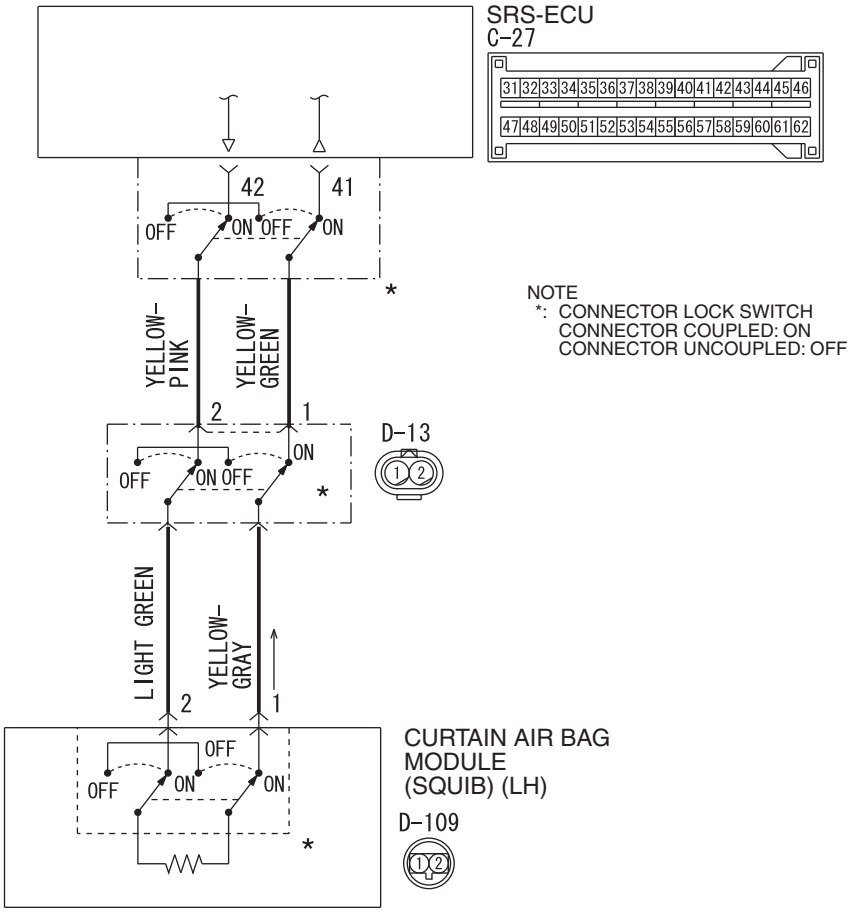

AC709440 AB

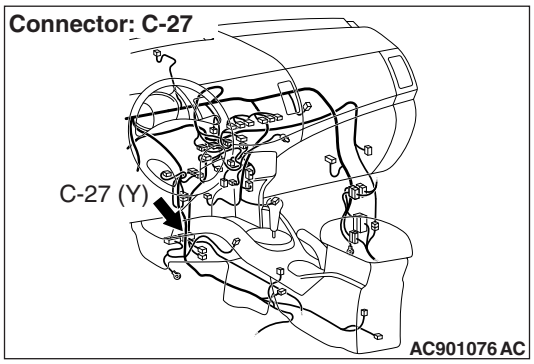

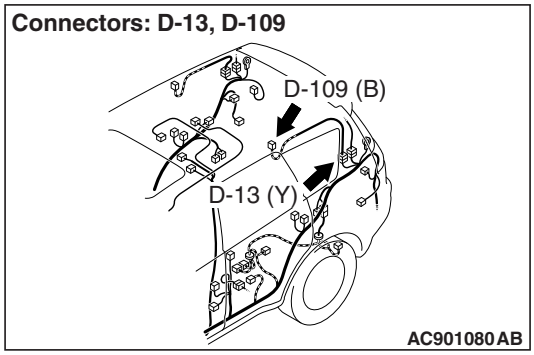

⚠ CAUTION

If DTC B1B1B is set in the SRS-ECU, always diagnose the CAN main bus line.

CIRCUIT OPERATION

- The SRS-ECU judges how severe a collision is by detecting signals from the side impact sensors installed on the lower side of the center pillar and at the quarter panel inner. If the impact is over a predetermined level, the SRS-ECU sends an ignition signal. At this time, if the side collision safing G-sensor is on, the SRS air bag will inflate.
- The ignition signal is input to the curtain air bag module (LH) to inflate the curtain air bag.

DTC SET CONDITIONS

This DTC is set if there is abnormal resistance between the input terminals of the curtain air bag module (LH) (squib).

TROUBLESHOOTING HITS

- Improper engaged connector or defective short spring*
- Short circuit between the curtain air bag module (LH) (squib) circuit terminals
- Damaged connector(s)
- Malfunction of the SRS-ECU

*NOTE: *: The squib circuit connectors integrate a "short" spring (which prevents the air bag from deploying unintentionally due to static electricity by shorting the positive wire to the ground wire in the squib circuit when the connectors are disconnected) (Refer to P.52B-28). Therefore, if connector C-27, D-13 or D-109 is damaged or improperly engaged, the short spring may not be released when the connector is connected.*

DIAGNOSIS

Required Special Tools:

- MB991958: Scan Tool (M.U.T.-III Sub Assembly)
  - MB991824: Vehicle Communication Interface (V.C.I.)
  - MB991827: M.U.T.-III USB Cable
  - MB991910: M.U.T.-III Main Harness A (Vehicles with CAN Communication System)
- MB991865: Dummy resistor
- MB991866: Resister harness

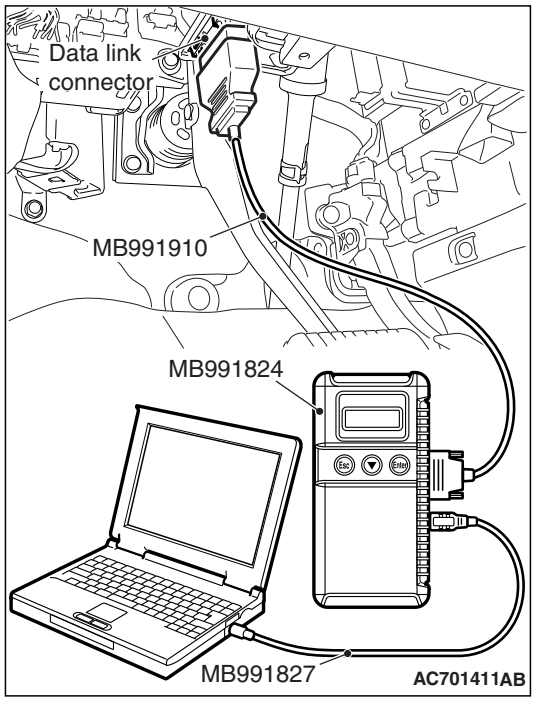

STEP 1. Using scan tool MB991958, diagnose the CAN bus line.

⚠ CAUTION

To prevent damage to scan tool MB991958, always turn the ignition switch to the "LOCK" (OFF) position before connecting or disconnecting scan tool MB991958.

(1) Connect scan tool MB991958. Refer to "How to connect the scan tool P.52B-28."
(2) Turn the ignition switch to the "ON" position.
(3) Diagnose the CAN bus line.
(4) Turn the ignition switch to the "LOCK" (OFF) position.

Q: Is the CAN bus line found to be normal?

YES : Go to Step 2.
NO : Repair the CAN bus line (Refer to GROUP 54C, Diagnosis P.54C-17).

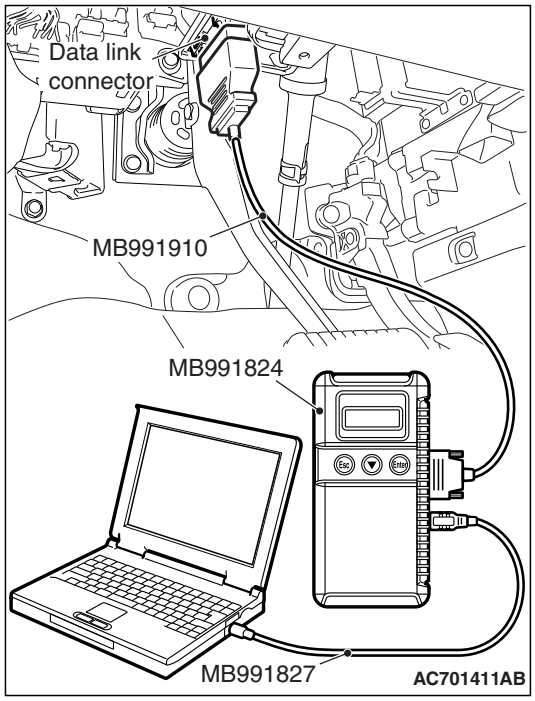

STEP 2. Recheck for diagnostic trouble code.

Check again if the DTC is set.
(1) Erase the DTC.
(2) Turn the ignition switch to "ON" position.
(3) Check if the DTC is set.
(4) Turn the ignition switch to the "LOCK" (OFF) position.

Q: Is the DTC set?

YES : Go to Step 3.
NO : There is an intermittent malfunction such as poor engaged connector(s) or open circuit (Refer to GROUP 00, How to Use Troubleshooting/Inspection Service Points –How to Cope with Intermittent Malfunctions P.00-15).

STEP 3. Check SRS-ECU connector C-27, curtain air bag module (LH) connector D-109 and intermediate connector D-13. (Using scan tool MB991958, read the diagnostic trouble code.)

(1) Disconnect the negative battery terminal.

(2) While pushing the part "A" indicated in the figure of the harness side connector, turn the lock lever to the direction of the arrow to release the lock lever, and disconnect the C-27 SRS-ECU connector. Then connect the connector.

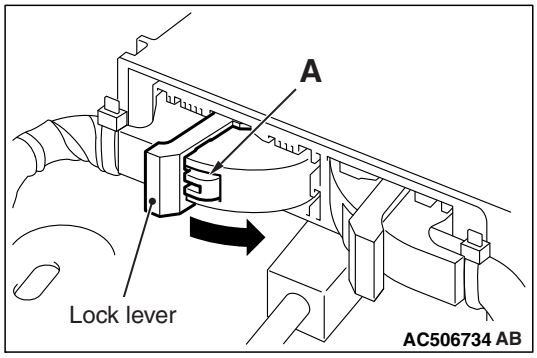

(3) Disconnect the D-109 connectors, and then reconnect it. Use a flat-tipped (–) screwdriver to pull out the D-109 curtain air bag module harness side connector locking button toward the arrow direction, release the lock, and then disconnect the connector.

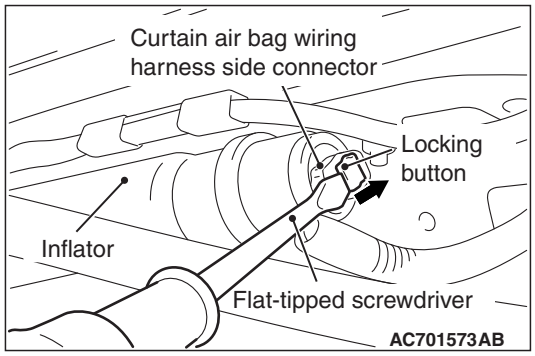

(4) Disconnect the D-13 connector's, and then reconnect them. Unlock the connector by sliding the locking button to the direction of the arrow as shown in the figure, and then disconnect the connector.

(5) Connect the negative battery terminal.

(6) After erasing the diagnostic trouble code memory, check the diagnostic trouble code again.

(7) Disconnect the negative battery terminal.

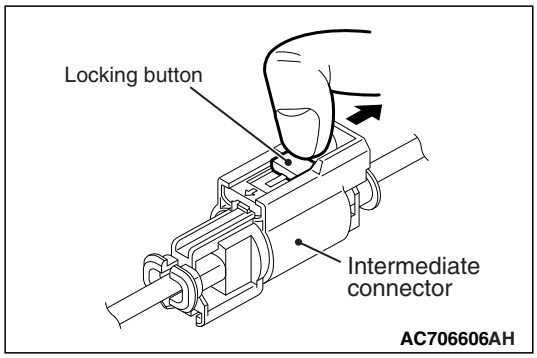

Q: Is DTC B1B1B set?

YES : Go to Step 4.

NO : Intermittent Malfunction (Refer to GROUP 00, How to Use Troubleshooting/Inspection Service Points –How to Cope with Intermittent Malfunction P.00-15).

STEP 4. Check by dummy resistor connection. (Using scan tool MB991958, read the diagnostic trouble code.)

(1) Disconnect the negative battery terminal.

(2) Disconnect the D-13 intermediate connector, unlock the connector by sliding the locking button to the direction of the arrow as shown in the figure, and then disconnect the connector.

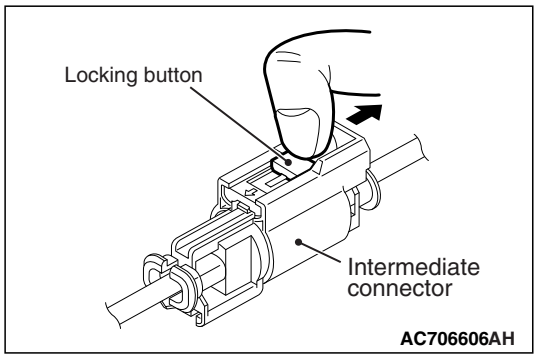

(3) Connect special tool MB991865 to special tool MB991866.

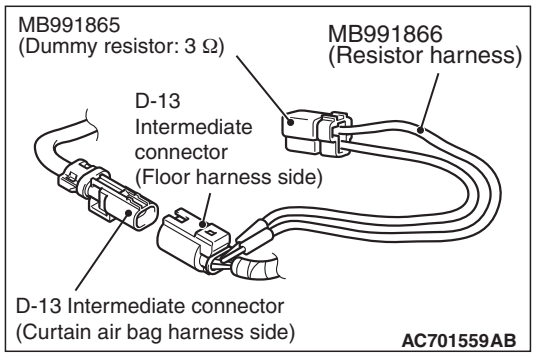

⚠ CAUTION

Do not insert a probe into the terminal from its front side directly, as the connector contact pressure may be weakened.

(4) Insert the probe of resistor harness, to which the dummy resistor is installed, from the back of D-13 intermediate connector (floor harness side).

(5) Connect the negative battery terminal.

(6) After erasing the diagnostic trouble code memory, check the diagnostic trouble code again.

Q: Is DTC B1B1B set?

YES : Go to Step 5.

NO : Go to Step 6.

STEP 5. Resistance measurement at the C-27 SRS-ECU connector.

(1) Disconnect the negative battery terminal.

(2) While pushing the part "A" indicated in the figure of the harness side connector, turn the lock lever to the direction of the arrow to release the lock lever, and disconnect the C-27 SRS-ECU connector.

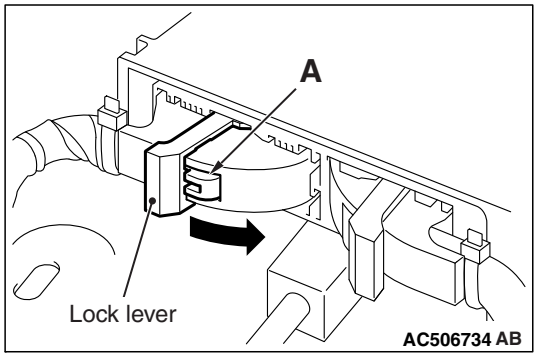

⚠ *DANGER*

To prevent the air bag from deploying unintentionally, disconnect the intermediate connector D-13 to short the squib circuit.

(3) Disconnect the D-13 intermediate connector, unlock the connector by sliding the locking button to the direction of the arrow as shown in the figure, and then disconnect the connector.

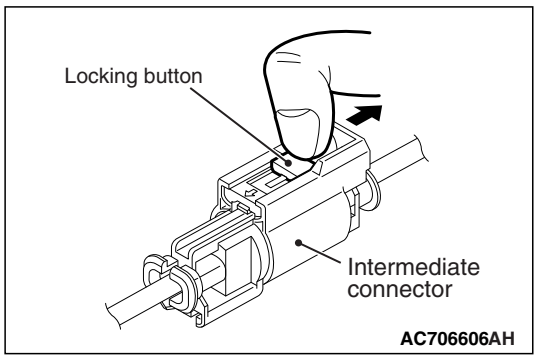

⚠ CAUTION

The short spring may not be released due to the insufficient insertion. Therefore, insert the insulator for 4 mm (0.6 inch) or more.

(4) Insert a cable tie [3 mm (0.12 inch) wide, 0.5 mm (0.02 inch) thick] between terminal 41, 42 and the short spring to release the short spring.

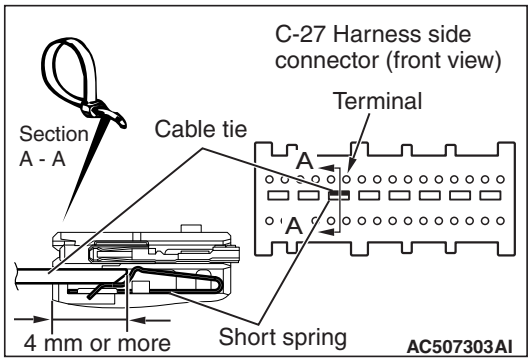

(5) Check for continuity between the C-27 wiring harness side connector terminal No. 41 and No. 42.
It should be open circuit.

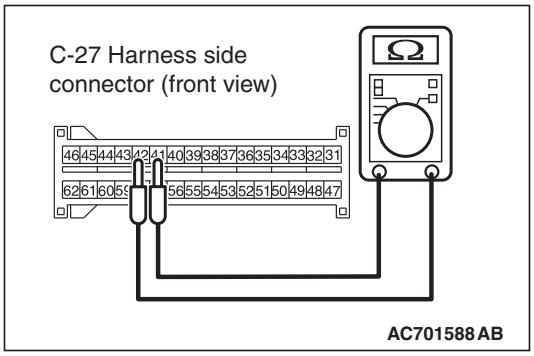

Q: Is it open circuit?

YES : Go to Step 7.

NO : Repair the wiring harness.

STEP 6. Short circuit check between the D-109 curtain air bag module harness side connector and the D-13 intermediate harness.

(1) Disconnect the negative battery terminal.

⚠ ***DANGER***

To prevent the air bag from deploying unintentionally, disconnect the curtain air bag module connector D-109 to short the squib circuit.

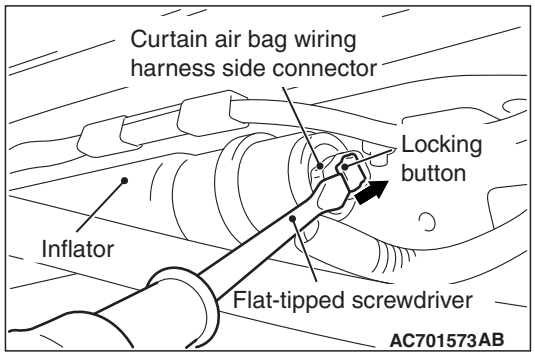

(2) Disconnect curtain air bag module (LH) D-109. Use a flat-tipped screwdriver to unlock the locking button at the harness side connector by withdrawing it toward you in two stages, and then disconnect the connector.

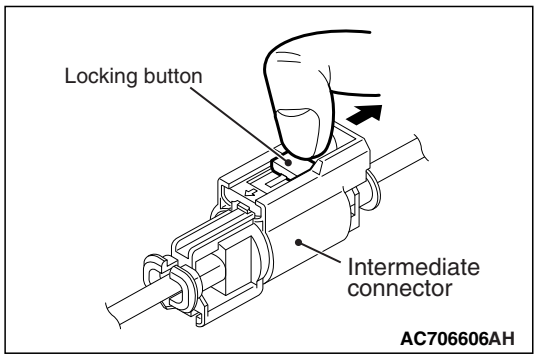

(3) Disconnect the D-13 intermediate connector, unlock the connector by sliding the locking button to the direction of the arrow as shown in the figure, and then disconnect the connector.

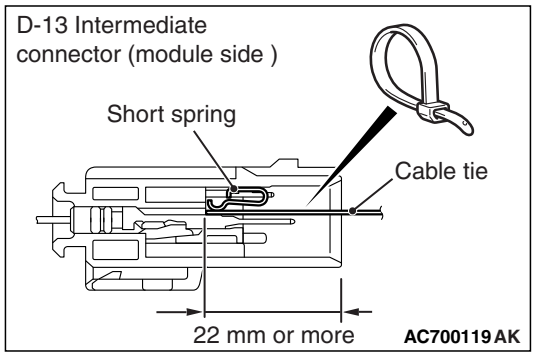

(4) Because the short spring is installed to the D-13 intermediate connector (curtain air bag harness side), insert a cable tie [3 mm (0.12 inch) wide, 0.5 mm (0.02 inch) thick] between terminals 1, 2 and the short spring to release the short spring.

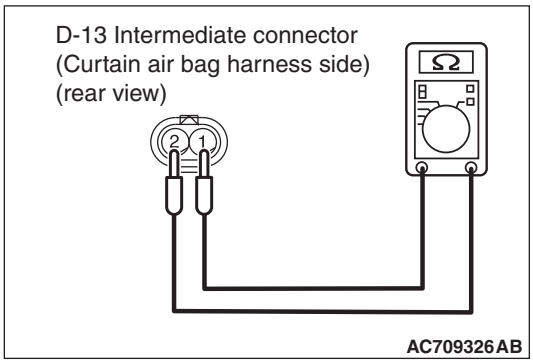

⚠ **CAUTION**

Do not insert a probe into the terminal from its front side directly, as the connector contact pressure may be weakened.

(5) Check for continuity between the D-13 intermediate connector (curtain air bag harness side) terminal No. 1 and No. 2.
It should be open circuit.

Q: Is it open circuit?

YES : Replace the curtain air bag module (LH) (Refer to P.52B-457). Then go to Step 7.

NO : Repair the wiring harness.

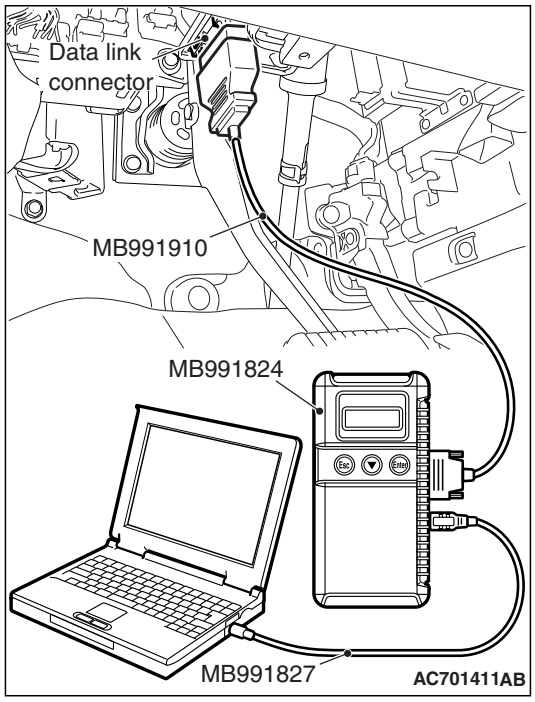

STEP 7. Recheck for diagnostic trouble code.

Check again if the DTC is set.

(1) Erase the DTC.
(2) Turn the ignition switch to the "ON" position.
(3) Check if the DTC is set.
(4) Turn the ignition switch to the "LOCK" (OFF) position.

Q: Is DTC B1B1B set?

YES : Replace SRS-ECU. (Refer to P.52B-440.)

NO : Intermittent Malfunction (Refer to GROUP 00, How to Use Troubleshooting/Inspection Service Points –How to Cope with Intermittent Malfunction P.00-15).

DTC B1B20: Curtain Air Bag Module (RH) (Squib) System (Shorted to Squib Circuit Ground)

Curtain Air Bag Module (Squib) (RH) Circuit

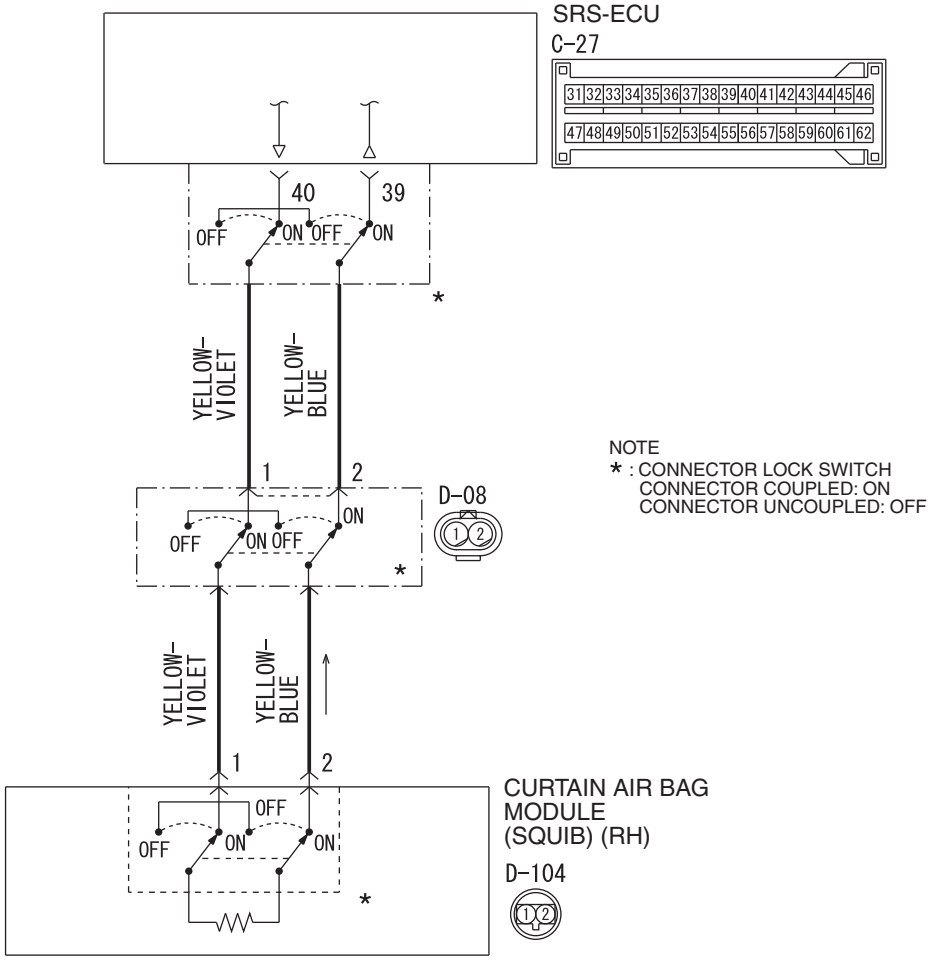

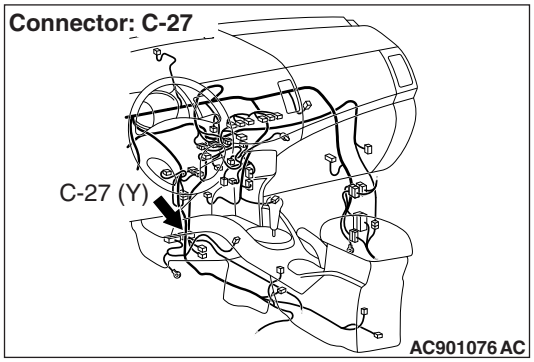

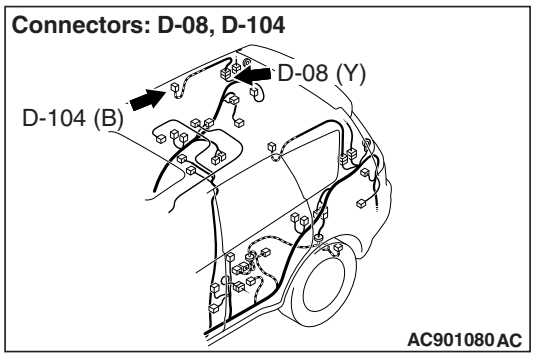

⚠ CAUTION

If DTC B1B20 is set in the SRS-ECU, always diagnose the CAN main bus line.

CIRCUIT OPERATION

- The SRS-ECU judges how severe a collision is by detecting signals from the side impact sensors installed on the lower side of the center pillar and at the quarter panel inner. If the impact is over a predetermined level, the SRS-ECU sends an ignition signal. At this time, if the side collision safing G-sensor is on, the SRS air bag will inflate.
- The ignition signal is input to the curtain air bag module (RH) to inflate the curtain air bag.

TSB Revision

DTC SET CONDITIONS

This DTC is set if there is abnormal resistance between the input terminals of the curtain air bag module (RH) (squib).

TROUBLESHOOTING HITS

- Damaged wiring harnesses or connectors
- Short to the ground in the curtain air bag module (RH) (squib) harness
- Malfunction of the SRS-ECU

DIAGNOSIS

Required Special Tools:

- MB991958: Scan Tool (M.U.T.-III Sub Assembly)
  - MB991824: Vehicle Communication Interface (V.C.I.)
  - MB991827: M.U.T.-III USB Cable
  - MB991910: M.U.T.-III Main Harness A (Vehicles with CAN Communication System)
- MB991865: Dummy resistor
- MB991866: Resister harness

STEP 1. Using scan tool MB991958, diagnose the CAN bus line.

⚠ CAUTION

To prevent damage to scan tool MB991958, always turn the ignition switch to the "LOCK" (OFF) position before connecting or disconnecting scan tool MB991958.

(1) Connect scan tool MB991958. Refer to "How to connect the scan tool P.52B-28."
(2) Turn the ignition switch to the "ON" position.
(3) Diagnose the CAN bus line.
(4) Turn the ignition switch to the "LOCK" (OFF) position.

Q: Is the CAN bus line found to be normal?

YES : Go to Step 2.
NO : Repair the CAN bus line (Refer to GROUP 54C, Diagnosis P.54C-17).

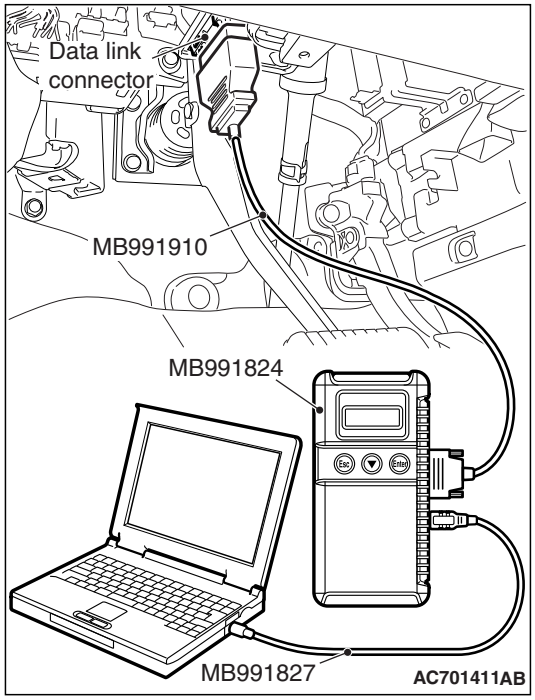

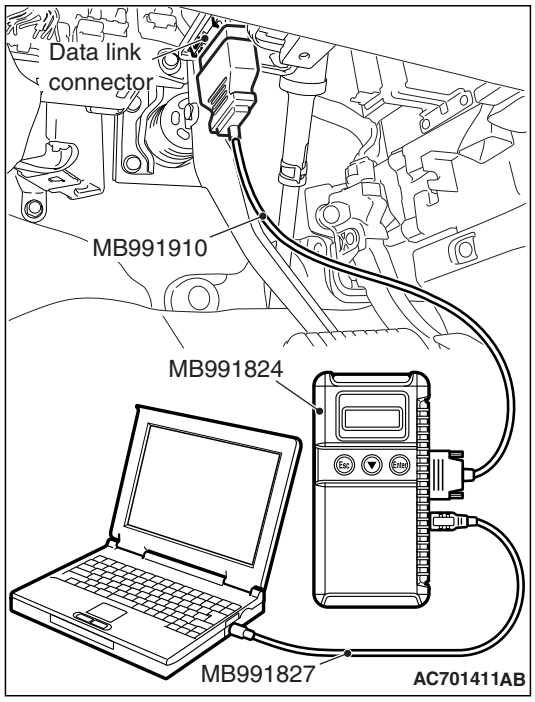

STEP 2. Recheck for diagnostic trouble code.

Check again if the DTC is set.

(1) Erase the DTC.
(2) Turn the ignition switch to "ON" position.
(3) Check if the DTC is set.
(4) Turn the ignition switch to the "LOCK" (OFF) position.

Q: Is the DTC set?

YES : Go to Step 3.
NO : There is an intermittent malfunction such as poor engaged connector(s) or open circuit (Refer to GROUP 00, How to Use Troubleshooting/Inspection Service Points –How to Cope with Intermittent Malfunctions P.00-15).

STEP 3. Check by dummy resistor connection. (Using scan tool MB991958, read the diagnostic trouble code.)

(1) Disconnect the negative battery terminal.
(2) Disconnect the D-08 intermediate connector, unlock the connector by sliding the locking button to the direction of the arrow as shown in the figure, and then disconnect the connector.

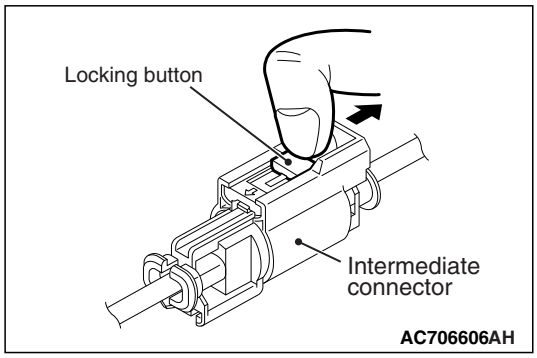

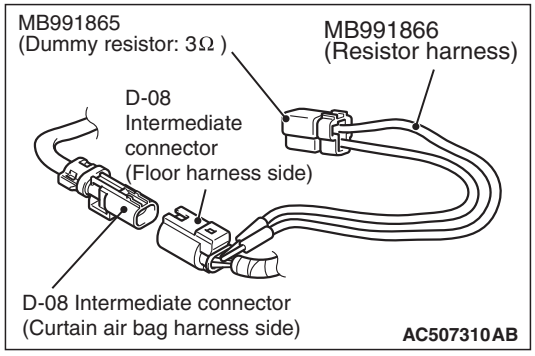

(3) Connect special tool MB991865 to special tool MB991866.

⚠ CAUTION

Do not insert a probe into the terminal from its front side directly, as the connector contact pressure may be weakened.

(4) Insert the probe of resistor harness, to which the dummy resistor is installed, from the back of D-08 intermediate connector (floor harness side).
(5) Connect the negative battery terminal.
(6) After erasing the diagnostic trouble code memory, check the diagnostic trouble code again.
(7) Disconnect the negative battery terminal.

Q: Is DTC B1B20 set?

YES : Go to Step 4.
NO : Go to Step 5.

STEP 4. Resistance measurement at the C-27 SRS-ECU connector

(1) Disconnect the negative battery terminal.

(2) While pushing the part "A" indicated in the figure of the harness side connector, turn the lock lever to the direction of the arrow to release the lock lever, and disconnect the C-27 SRS-ECU connector.

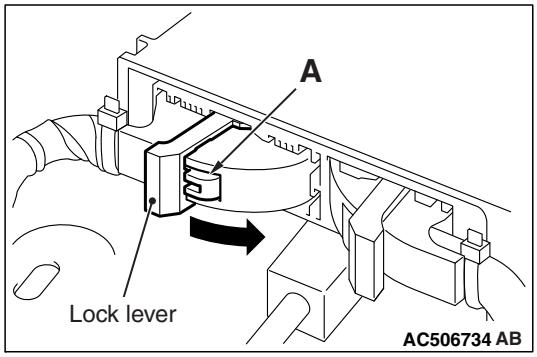

⚠ ***DANGER***

To prevent the air bag from deploying unintentionally, disconnect the intermediate connector D-08 to short the squib circuit.

(3) Disconnect the D-08 intermediate connector, unlock the connector by sliding the locking button to the direction of the arrow as shown in the figure, and then disconnect the connector.

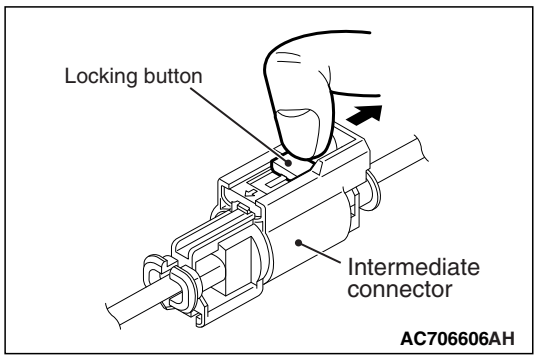

⚠ CAUTION

The short spring may not be released due to the insufficient insertion. Therefore, insert the insulator for 4 mm (0.6 inch) or more.

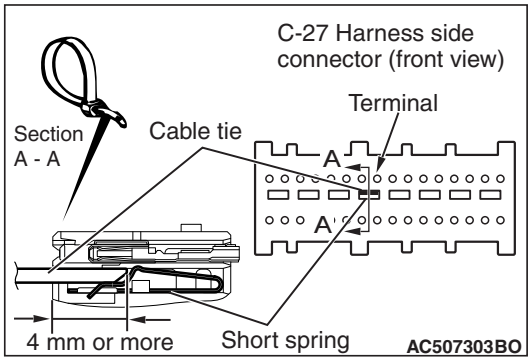

(4) Insert a cable tie [3 mm (0.12 inch) wide, 0.5 mm (0.02 inch) thick] between terminal 39, 40 and the short spring to release the short spring.

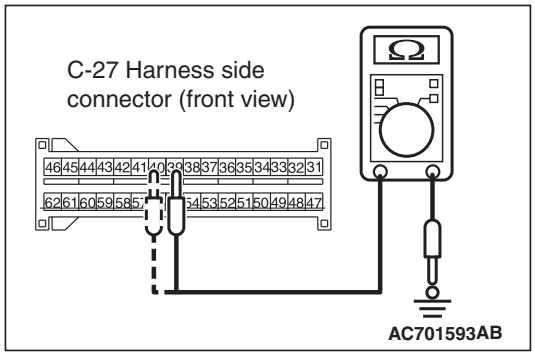

(5) Check for continuity between C-27 wiring harness side connector terminal No. 39, 40 and body ground.
It should be open circuit.

Q: Is it open circuit?

YES : Go to Step 6.
NO : Repair the wiring harness.

STEP 5. Resistance measurement at the D-08 intermediate connector.

(1) Disconnect the negative battery terminal.

⚠ DANGER

To prevent the air bag from deploying unintentionally, disconnect the curtain air bag module connector D-104 to short the squib circuit.

(2) Disconnect curtain air bag module (RH) D-104. Use a flat-tipped screwdriver to unlock the locking button at the harness side connector by withdrawing it toward you in two stages, and then disconnect the connector.

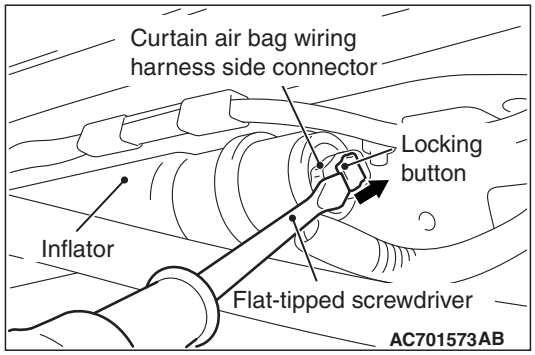

(3) Disconnect the D-08 intermediate connector, unlock the connector by sliding the locking button to the direction of the arrow as shown in the figure, and then disconnect the connector.

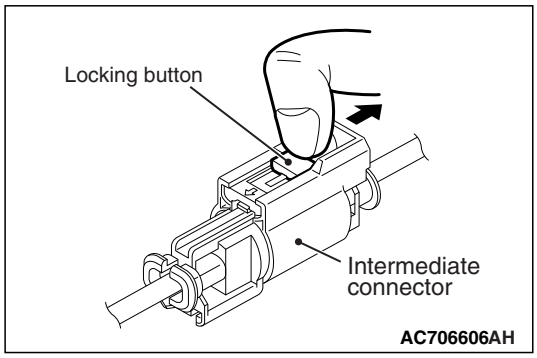

(4) Because the short spring is installed to the D-08 intermediate connector (curtain air bag harness side), insert a cable tie [3 mm (0.12 inch) wide, 0.5 mm (0.02 inch) thick] between terminals 1, 2 and the short spring to release the short spring.

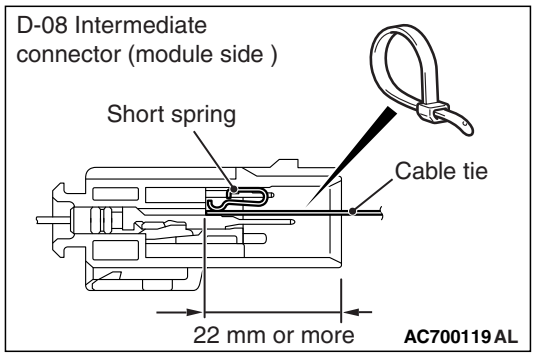

⚠ CAUTION

Do not insert a probe into the terminal from its front side directly as the connector contact pressure may be weakened.

(5) Check for continuity between the D-08 intermediate connector (module side) terminal No. 1, 2 and the body ground.
It should be open circuit.

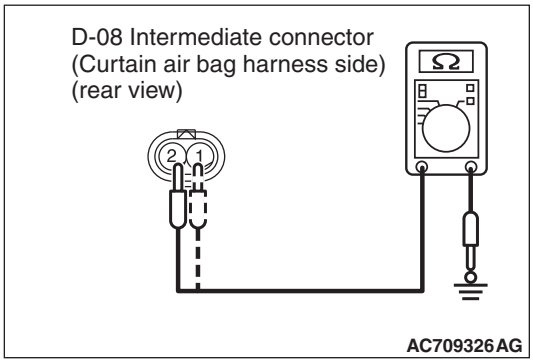

Q: Is it open circuit?

YES : Replace the curtain air bag module (squib) (Refer to P.52B-457).

NO : Repair the wiring harness.

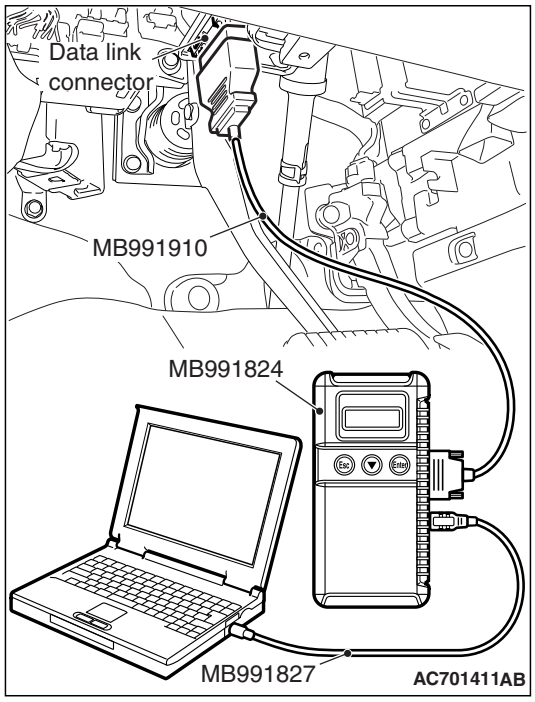

STEP 6. Recheck for diagnostic trouble code.

Check again if the DTC is set.

(1) Erase the DTC.
(2) Turn the ignition switch to the "ON" position.
(3) Check if the DTC is set.
(4) Turn the ignition switch to the "LOCK" (OFF) position.

Q: Is DTC B1B20 set?

YES : Replace SRS-ECU. (Refer to P.52B-440.)

NO : Intermittent Malfunction (Refer to GROUP 00, How to Use Troubleshooting/Inspection Service Points –How to Cope with Intermittent Malfunction P.00-15).

DTC B1B21: Curtain Air Bag Module (RH) (Squib) System (Shorted to Squib Circuit Power Supply)

Curtain Air Bag Module (Squib) (RH) Circuit

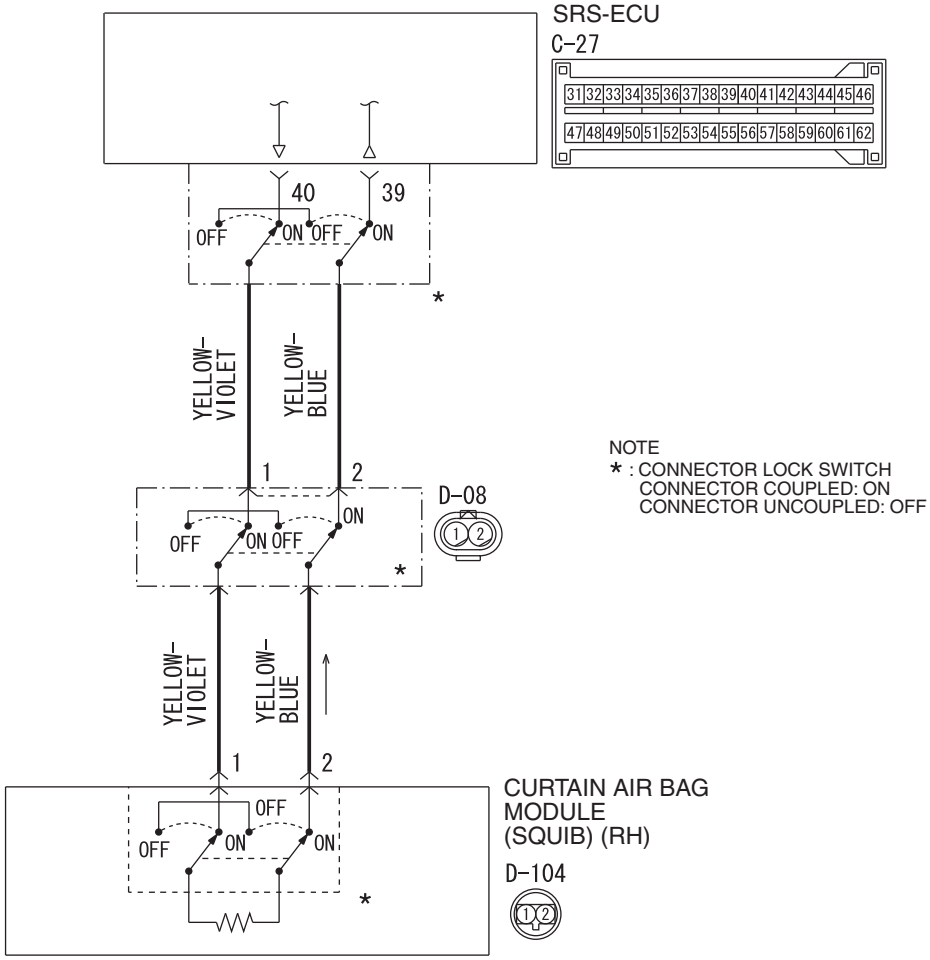

AC709517AB

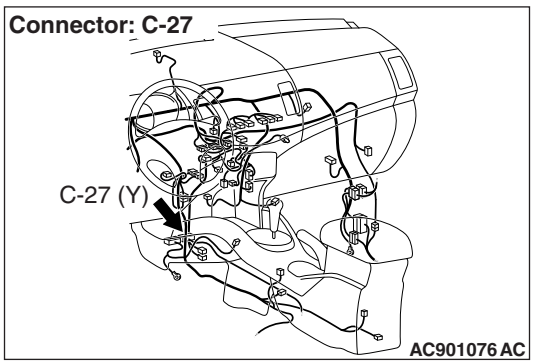

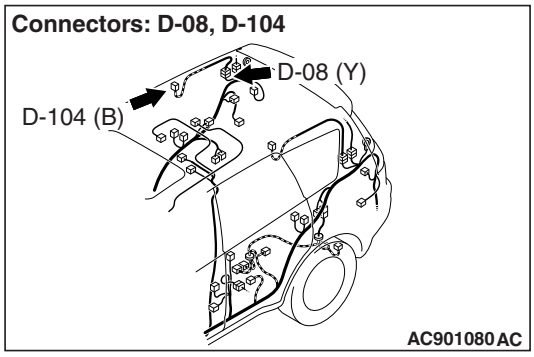

⚠ CAUTION

If DTC B1B21 is set in the SRS-ECU, always diagnose the CAN main bus line.

CIRCUIT OPERATION

- The SRS-ECU judges how severe a collision is by detecting signals from the side impact sensors installed on the lower side of the center pillar and at the quarter panel inner. If the impact is over a predetermined level, the SRS-ECU sends an ignition signal. At this time, if the side collision safing G-sensor is on, the SRS air bag will inflate.
- The ignition signal is input to the curtain air bag module (RH) to inflate the curtain air bag.

TSB Revision

DTC SET CONDITIONS

This DTC is set if there is abnormal resistance between the input terminals of the curtain air bag module (RH) (squib).

TROUBLESHOOTING HITS

- Damaged wiring harnesses or connectors
- Short to the power supply in the curtain air bag module (RH) (squib) harness
- Malfunction of the SRS-ECU

DIAGNOSIS

Required Special Tools:

- MB991958: Scan Tool (M.U.T.-III Sub Assembly)
  - MB991824: Vehicle Communication Interface (V.C.I.)
  - MB991827: M.U.T.-III USB Cable
  - MB991910: M.U.T.-III Main Harness A (Vehicles with CAN Communication System)
- MB991865: Dummy resistor
- MB991866: Resister harness

STEP 1. Using scan tool MB991958, diagnose the CAN bus line.

⚠ CAUTION

To prevent damage to scan tool MB991958, always turn the ignition switch to the "LOCK" (OFF) position before connecting or disconnecting scan tool MB991958.

(1) Connect scan tool MB991958. Refer to "How to connect the scan tool P.52B-28."
(2) Turn the ignition switch to the "ON" position.
(3) Diagnose the CAN bus line.
(4) Turn the ignition switch to the "LOCK" (OFF) position.

Q: Is the CAN bus line found to be normal?

YES : Go to Step 2.
NO : Repair the CAN bus line (Refer to GROUP 54C, Diagnosis P.54C-17).

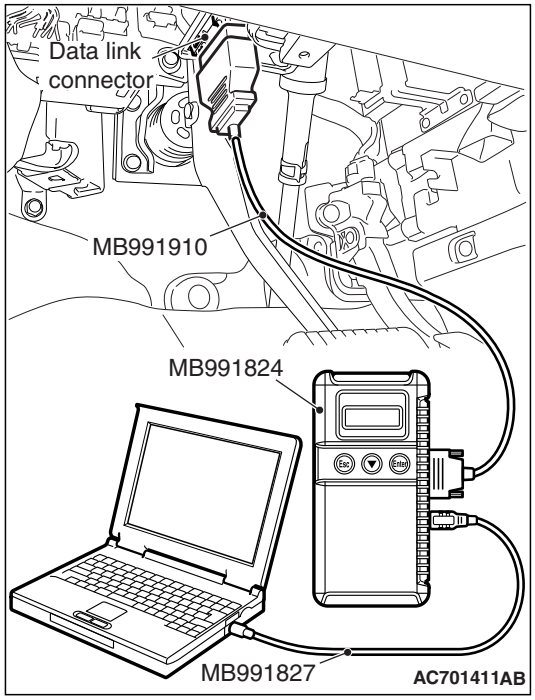

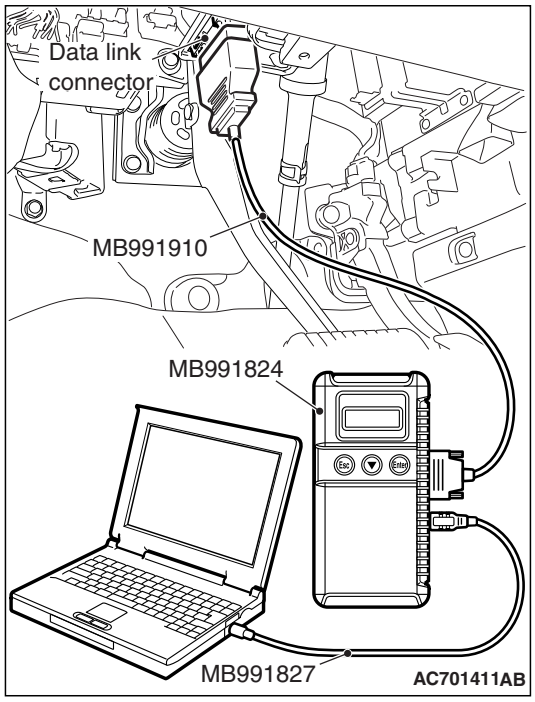

STEP 2. Recheck for diagnostic trouble code.

Check again if the DTC is set.

(1) Erase the DTC.
(2) Turn the ignition switch to "ON" position.
(3) Check if the DTC is set.
(4) Turn the ignition switch to the "LOCK" (OFF) position.

Q: Is the DTC set?

YES : Go to Step 3.
NO : There is an intermittent malfunction such as poor engaged connector(s) or open circuit (Refer to GROUP 00, How to Use Troubleshooting/Inspection Service Points –How to Cope with Intermittent Malfunctions P.00-15).

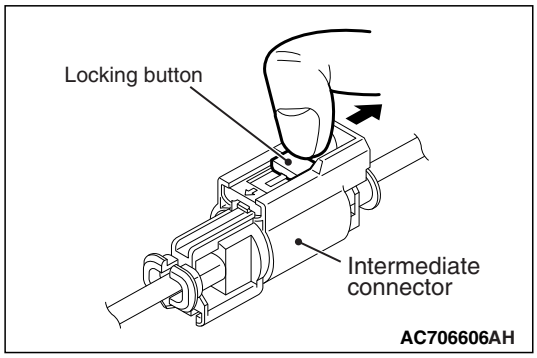

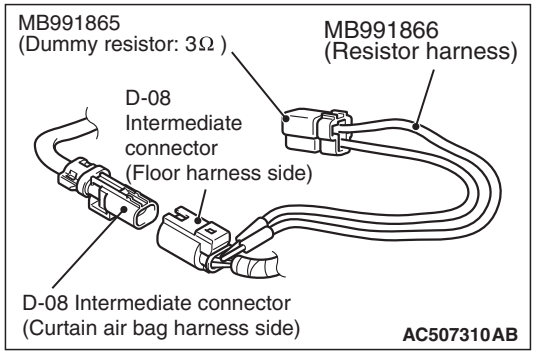

STEP 3. Check by dummy resistor connection. (Using scan tool MB991958, read the diagnostic trouble code.)

(1) Disconnect the negative battery terminal.
(2) Disconnect the D-08 intermediate connector, unlock the connector by sliding the locking button to the direction of the arrow as shown in the figure, and then disconnect the connector.
(3) Connect special tool MB991865 to special tool MB991866.

⚠ CAUTION

Do not insert a probe into the terminal from its front side directly, as the connector contact pressure may be weakened.

(4) Insert the probe of resistor harness, to which the dummy resistor is installed, from the back of D-08 intermediate connector (floor harness side).
(5) Connect the negative battery terminal.
(6) After erasing the diagnostic trouble code memory, check the diagnostic trouble code again.
(7) Disconnect the negative battery terminal.

Q: Is DTC B1B21 set?

YES : Go to Step 4.
NO : Go to Step 5.

STEP 4. Voltage measurement at the C-27 SRS-ECU connector.

(1) Disconnect the negative battery terminal.
(2) While pushing the part "A" indicated in the figure of the harness side connector, turn the lock lever to the direction of the arrow to release the lock lever, and disconnect the C-27 SRS-ECU connector.

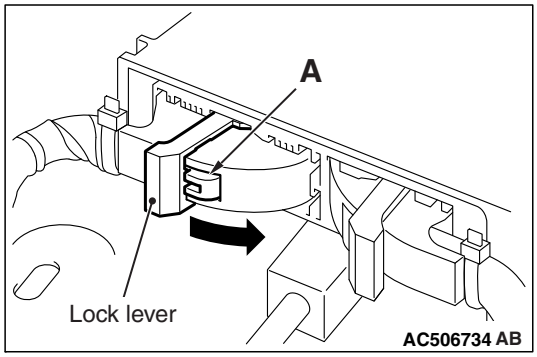

⚠ *DANGER*

To prevent the air bag from deploying unintentionally, disconnect the intermediate connector D-08 to short the squib circuit.

(3) Disconnect the D-08 intermediate connector, unlock the connector by sliding the locking button to the direction of the arrow as shown in the figure, and then disconnect the connector.

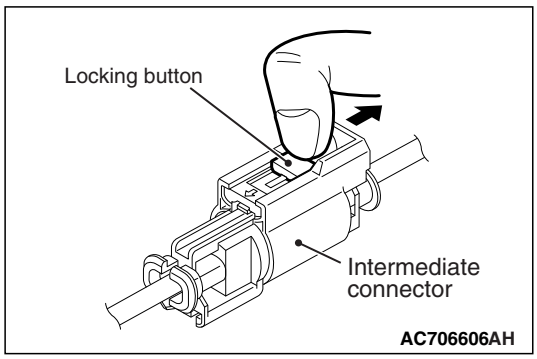

⚠ CAUTION

The short spring may not be released due to the insufficient insertion. Therefore, insert the insulator for 4 mm (0.6 inch) or more.

(4) Insert a cable tie [3 mm (0.12 inch) wide, 0.5 mm (0.02 inch) thick] between terminal 39, 40 and the short spring to release the short spring.
(5) Connect the negative battery terminal.
(6) Ignition switch: ON

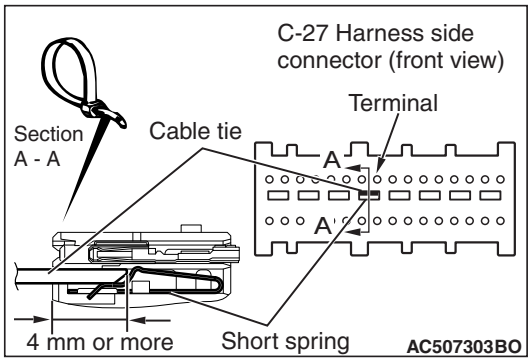

(7) Measure the voltage between the C-27 wiring harness side connector terminal No. 39, 40 and body ground.
Voltage should measure 1 volt or less.

Q: Is the measured voltage within the specified range?

YES : Go to Step 6.
NO : Repair the wiring harness.

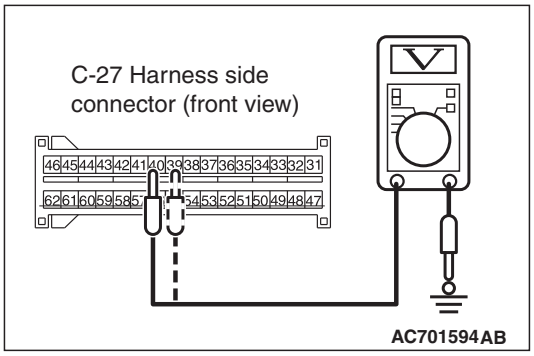

STEP 5. Voltage measurement at the D-08 intermediate connector.

(1) Disconnect the negative battery terminal.

⚠ DANGER

To prevent the air bag from deploying unintentionally, disconnect the curtain air bag module connector D-104 to short the squib circuit.

(2) Disconnect curtain air bag module (RH) D-104. Use a flat-tipped screwdriver to unlock the locking button at the harness side connector by withdrawing it toward you in two stages, and then disconnect the connector.

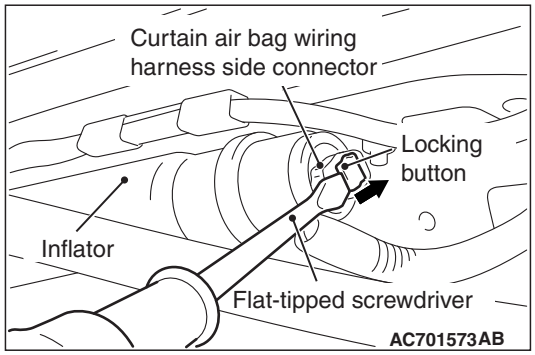

(3) Disconnect the D-08 intermediate connector, unlock the connector by sliding the locking button to the direction of the arrow as shown in the figure, and then disconnect the connector.

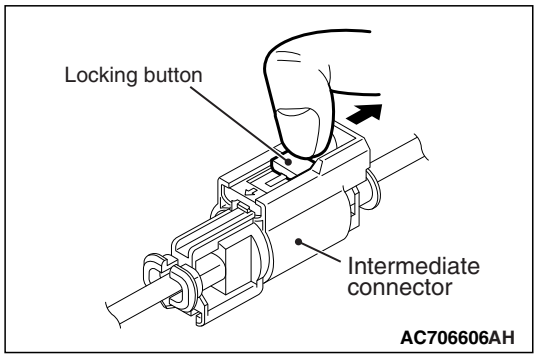

(4) Because the short spring is installed to the D-08 intermediate connector (curtain air bag harness side), insert a cable tie [3 mm (0.12 inch) wide, 0.5 mm (0.02 inch) thick] between terminals 1, 2 and the short spring to release the short spring.

(5) Connect the negative battery terminal.

(6) Ignition switch: ON

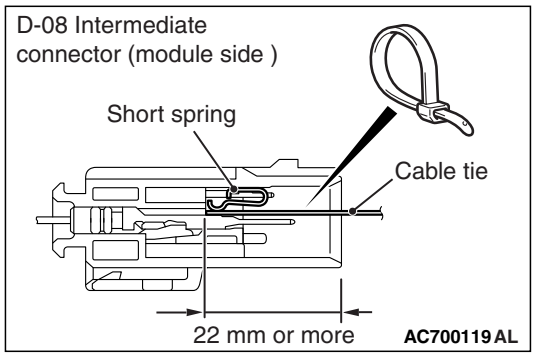

⚠ CAUTION

Do not insert a probe into the terminal from its front side directly, as the connector contact pressure may be weakened.

(7) Check for continuity between the D-08 intermediate connector (curtain air bag harness side) terminal No. 1, 2 and the body ground.
Voltage should measure 1 volt or less.

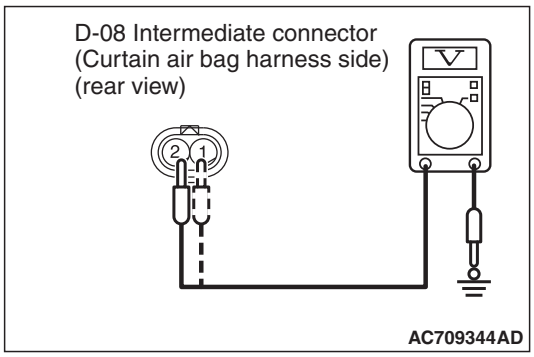

Q: Is the measured voltage within the specified range?

YES : Replace the curtain air bag module (squib) (Refer to P.52B-457).

NO : Repair the wiring harness.

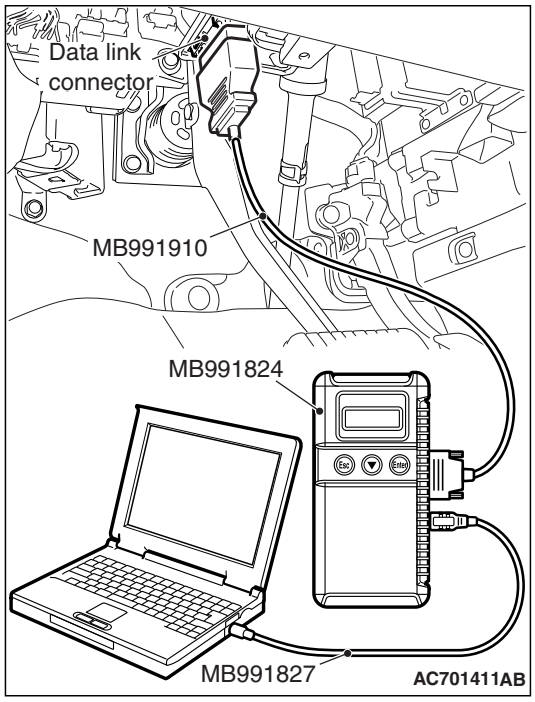

STEP 6. Recheck for diagnostic trouble code.

Check again if the DTC is set.

(1) Erase the DTC.
(2) Turn the ignition switch to the "ON" position.
(3) Check if the DTC is set.
(4) Turn the ignition switch to the "LOCK" (OFF) position.

Q: Is DTC B1B21 set?

YES : Replace SRS-ECU. (Refer to P.52B-440.)

NO : Intermittent Malfunction (Refer to GROUP 00, How to Use Troubleshooting/Inspection Service Points –How to Cope with Intermittent Malfunction P.00-15).

DTC B1B22: Curtain Air Bag Module (RH) (Squib) System (Squib Circuit Open)

Curtain Air Bag Module (Squib) (RH) Circuit

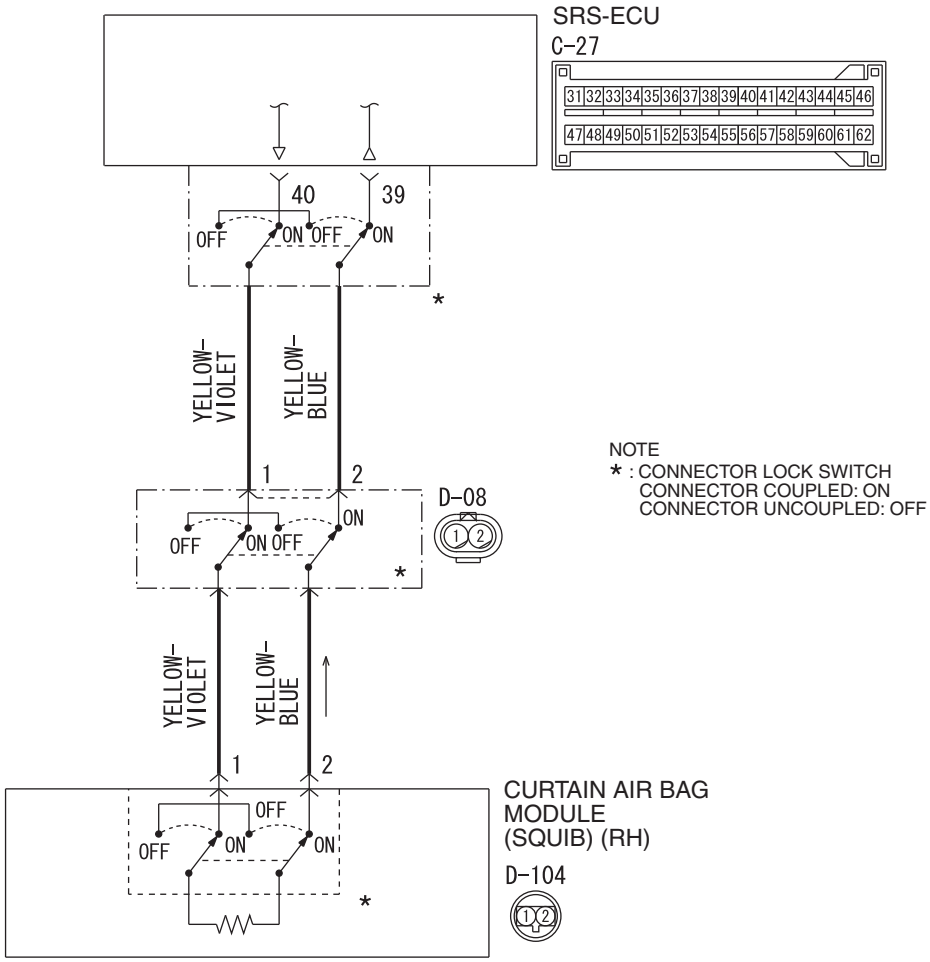

AC709517AB

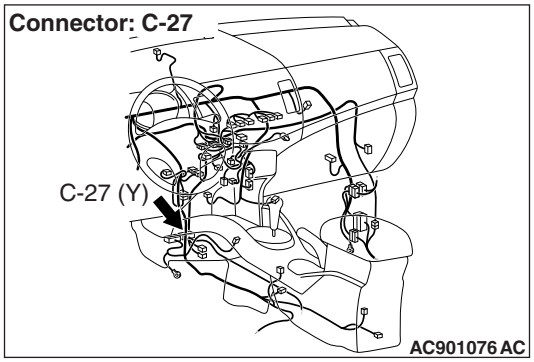

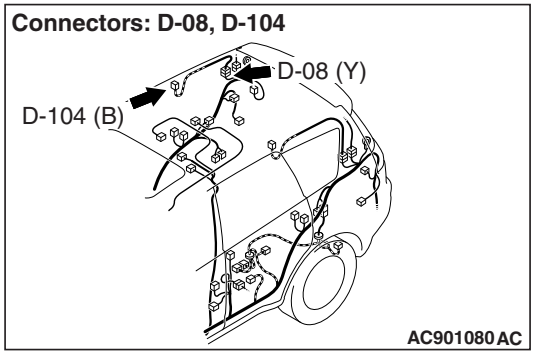

⚠ CAUTION

If DTC B1B22 is set in the SRS-ECU, always diagnose the CAN main bus line.

CIRCUIT OPERATION

- The SRS-ECU judges how severe a collision is by detecting signals from the side impact sensors installed on the lower side of the center pillar and at the quarter panel inner. If the impact is over a predetermined level, the SRS-ECU sends an ignition signal. At this time, if the side collision safing G-sensor is on, the SRS air bag will inflate.
- The ignition signal is input to the curtain air bag module (RH) to inflate the curtain air bag.

TSB Revision

DTC SET CONDITIONS

This DTC is set if there is abnormal resistance between the input terminals of the curtain air bag module (RH) (squib).

TROUBLESHOOTING HITS

- Open circuit in the curtain air bag module (RH) (squib) circuit
- Improper connector contact
- Malfunction of the SRS-ECU

DIAGNOSIS

Required Special Tools:

- MB991958: Scan Tool (M.U.T.-III Sub Assembly)
  - MB991824: Vehicle Communication Interface (V.C.I.)
  - MB991827: M.U.T.-III USB Cable
  - MB991910: M.U.T.-III Main Harness A (Vehicles with CAN Communication System)
- MB991865: Dummy resistor
- MB991866: Resister harness
- MB991884: Resister harness

STEP 1. Using scan tool MB991958, diagnose the CAN bus line.

⚠ CAUTION

To prevent damage to scan tool MB991958, always turn the ignition switch to the "LOCK" (OFF) position before connecting or disconnecting scan tool MB991958.

(1) Connect scan tool MB991958. Refer to "How to connect the scan tool P.52B-28."
(2) Turn the ignition switch to the "ON" position.
(3) Diagnose the CAN bus line.
(4) Turn the ignition switch to the "LOCK" (OFF) position.

Q: Is the CAN bus line found to be normal?

YES : Go to Step 2.
NO : Repair the CAN bus line (Refer to GROUP 54C, Diagnosis P.54C-17).

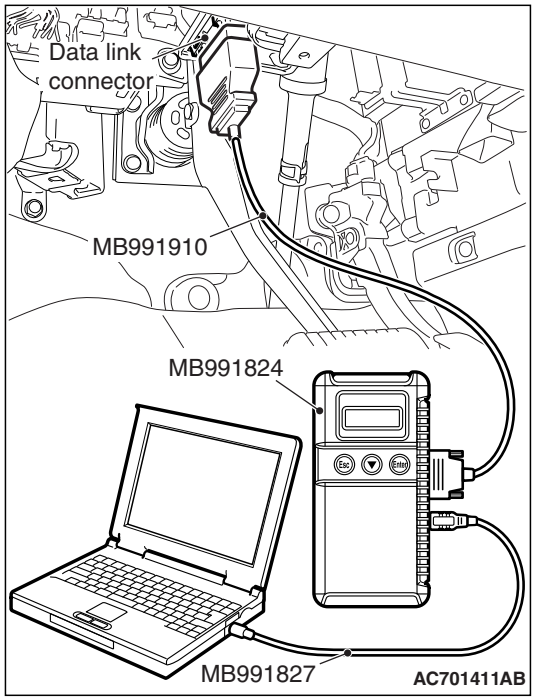

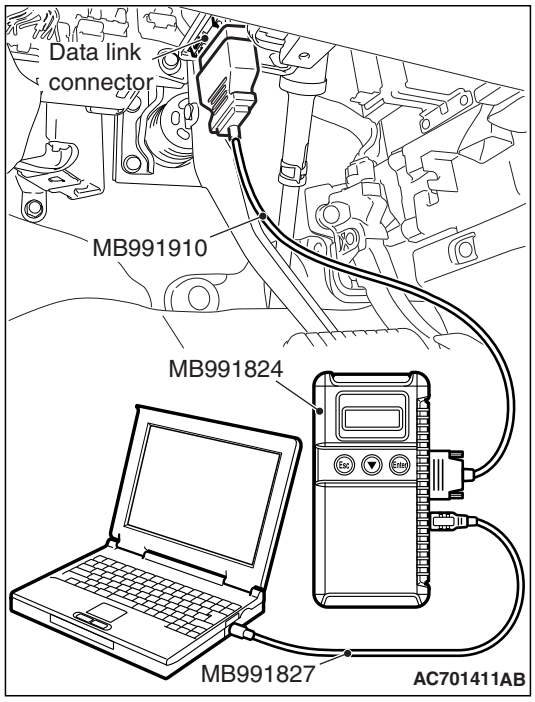

STEP 2. Recheck for diagnostic trouble code.

Check again if the DTC is set.

(1) Erase the DTC.
(2) Turn the ignition switch to "ON" position.
(3) Check if the DTC is set.
(4) Turn the ignition switch to the "LOCK" (OFF) position.

Q: Is the DTC set?

YES : Go to Step 3.
NO : There is an intermittent malfunction such as poor engaged connector(s) or open circuit (Refer to GROUP 00, How to Use Troubleshooting/Inspection Service Points –How to Cope with Intermittent Malfunctions P.00-15).

STEP 3. Check by dummy resistor connection. (Using scan tool MB991958, read the diagnostic trouble code.)

(1) Disconnect the negative battery terminal.
(2) Disconnect the D-08 intermediate connector, unlock the connector by sliding the locking button to the direction of the arrow as shown in the figure, and then disconnect the connector.

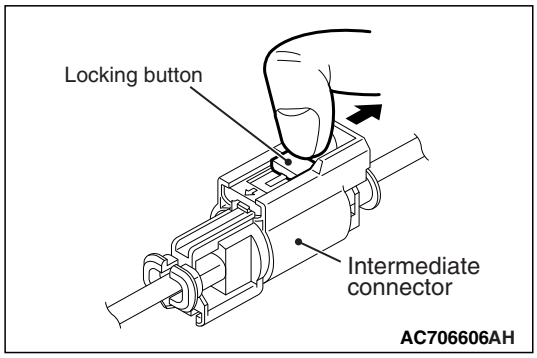

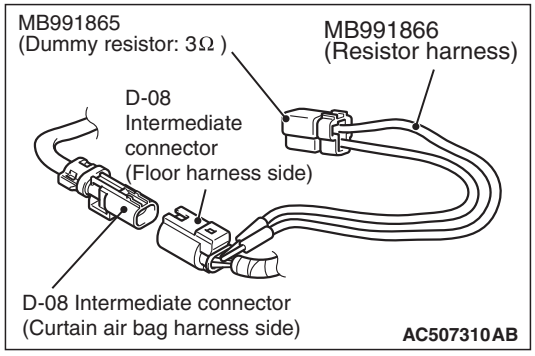

(3) Connect special tool MB991865 to special tool MB991866.

⚠ CAUTION

Do not insert a probe into the terminal from its front side directly, as the connector contact pressure may be weakened.

(4) Insert the probe of resistor harness, to which the dummy resistor is installed, from the back of D-08 intermediate connector (floor harness side).
(5) Connect the negative battery terminal.
(6) After erasing the diagnostic trouble code memory, check the diagnostic trouble code again.
(7) Disconnect the negative battery terminal.

Q: Is DTC B1B22 set?

YES : Go to Step 4.
NO : Go to Step 5.

STEP 4. Resistance measurement at the C-27 SRS-ECU connector and the D-08 intermediate connector.

(1) Disconnect the negative battery terminal.

(2) While pushing the part "A" indicated in the figure of the harness side connector, turn the lock lever to the direction of the arrow to release the lock lever, and disconnect the C-27 SRS-ECU connector.

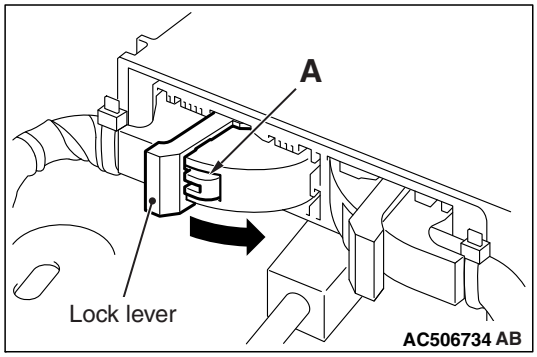

⚠ ***DANGER***

To prevent the air bag from deploying unintentionally, disconnect the intermediate connector D-08 to short the squib circuit.

(3) Disconnect the D-08 intermediate connector, unlock the connector by sliding the locking button to the direction of the arrow as shown in the figure, and then disconnect the connector.

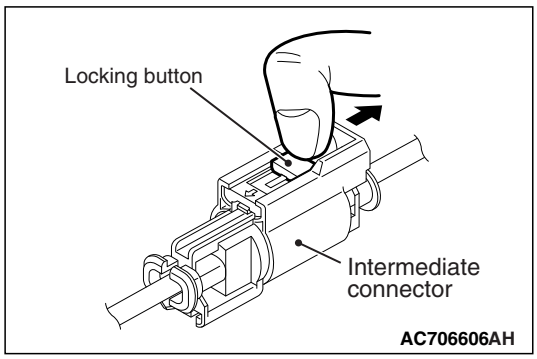

⚠ **CAUTION**

The short spring may not be released due to the insufficient insertion. Therefore, insert the insulator for 4 mm (0.6 inch) or more.

(4) Insert a cable tie [3 mm (0.12 inch) wide, 0.5 mm (0.02 inch) thick] between terminal 39, 40 and the short spring to release the short spring.

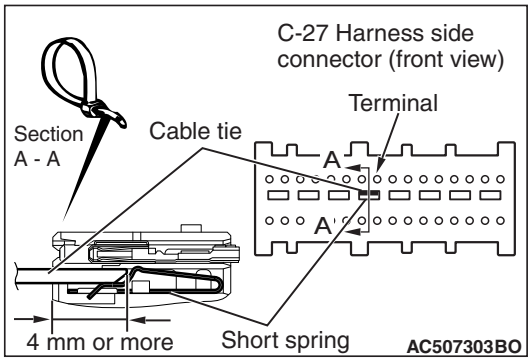

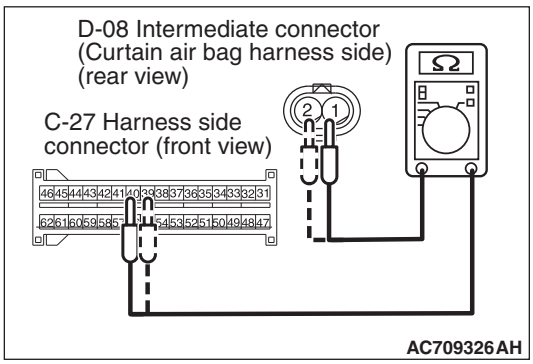

⚠ CAUTION

Do not insert a probe into the terminal from D-08 intermediate connector front side directly, as the connector contact pressure may be weakened.

(5) Check for continuity between the following terminals. It should be less than 2 ohms.
- SRS-ECU connector C-27 (terminal No.39) and the intermediate connector D-08 (terminal No.2)
- SRS-ECU connector C-27 (terminal No.40) and the intermediate connector D-08 (terminal No.1)

Q: Does continuity exist?

YES : Go to Step 6.

NO : Repair the wiring harness between the C-27 harness side connector terminal No. 39, 40 and the D-08 intermediate connector (floor harness side) terminal No. 2, 1.

STEP 5. Resistance measurement at the D-08 intermediate connector terminal No. 1, 2 and the D-104 curtain air bag module harness side connector terminal No. 1, 2.

(1) Disconnect the negative battery terminal.

⚠ DANGER

To prevent the air bag from deploying unintentionally, disconnect the curtain air bag module connector D-104 to short the squib circuit.

(2) Disconnect curtain air bag module (RH) D-104. Use a flat-tipped screwdriver to unlock the locking button at the harness side connector by withdrawing it toward you in two stages, and then disconnect the connector.

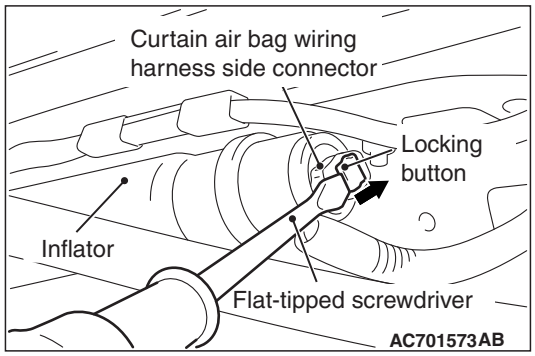

(3) Disconnect the D-08 intermediate connector, unlock the connector by sliding the locking button to the direction of the arrow as shown in the figure, and then disconnect the connector.

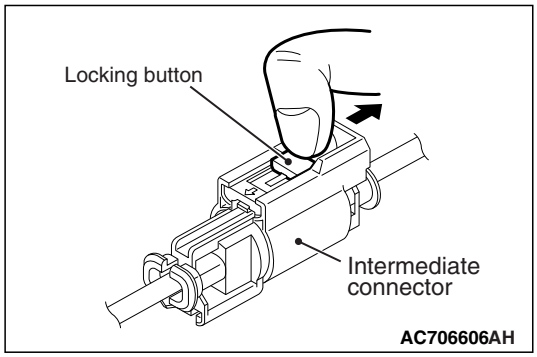

(4) Because the short spring is installed to the D-08 intermediate connector (curtain air bag harness side), insert a cable tie [3 mm (0.12 inch) wide, 0.5 mm (0.02 inch) thick] between terminals 1, 2 and the short spring to release the short spring.

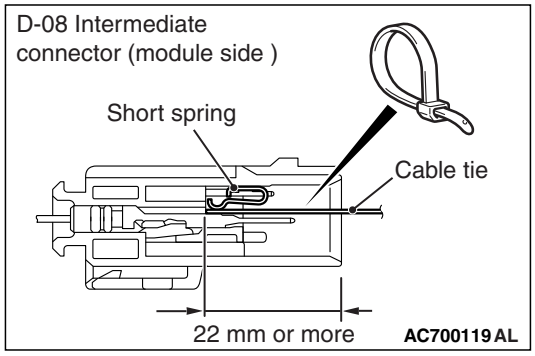

(5) Connect special tool MB991884 to the removed D-104 harness side connector.

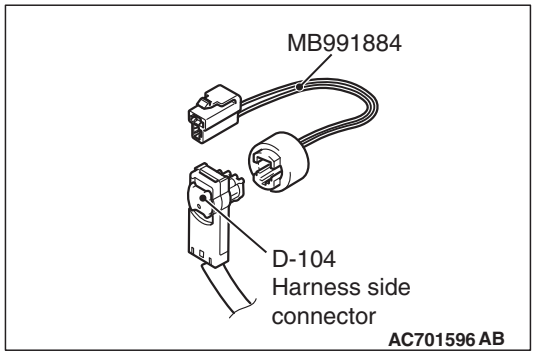

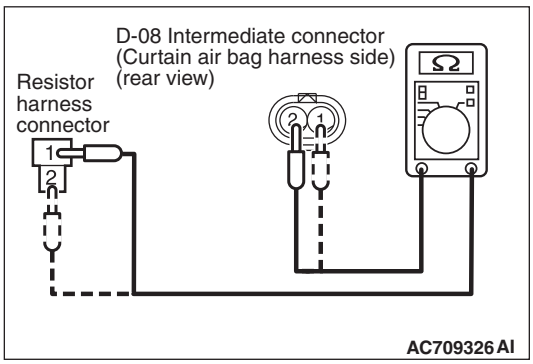

⚠ CAUTION

Do not insert a probe into the terminal from D-08 intermediate connector front side directly, as the connector contact pressure may be weakened.

(6) Check for continuity between the following terminals.
It should be less than 2 ohms.
- Intermediate connector D-08 (terminal No.1) and resistor harness connector terminal No.2)
- Intermediate connector D-08 (terminal No.2) and resistor harness connector terminal No.1)

Q: Is the check result normal?

YES : Replace the curtain air bag module (squib) (Refer to P.52B-457).

NO : Repair the wiring harness.

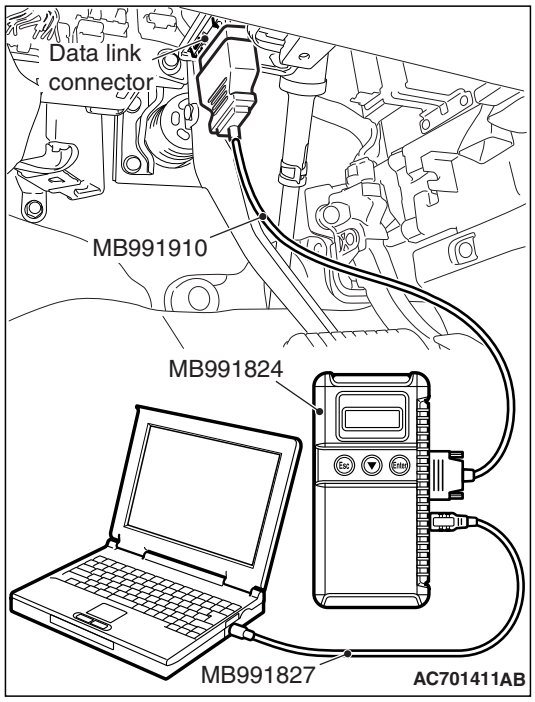

STEP 6. Recheck for diagnostic trouble code.

Check again if the DTC is set.

(1) Erase the DTC.
(2) Turn the ignition switch to the "ON" position.
(3) Check if the DTC is set.
(4) Turn the ignition switch to the "LOCK" (OFF) position.

Q: Is DTC B1B22 set?

YES : Replace SRS-ECU. (Refer to P.52B-440.)

NO : Intermittent Malfunction (Refer to GROUP 00, How to Use Troubleshooting/Inspection Service Points –How to Cope with Intermittent Malfunction P.00-15).

DTC B1B23: Curtain Air Bag Module (RH) (Squib) System (Short Circuit between Squib Circuit Terminals)

Curtain Air Bag Module (Squib) (RH) Circuit

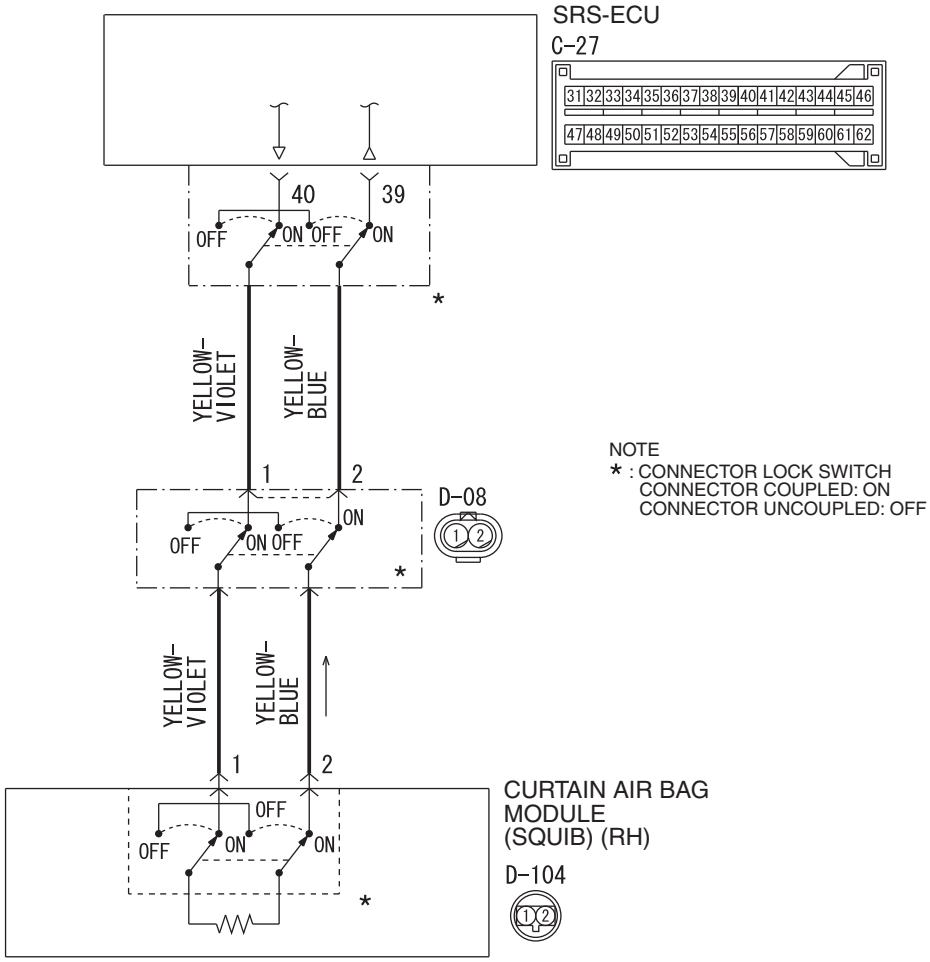

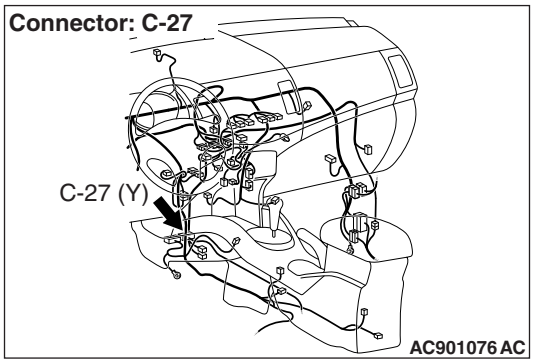

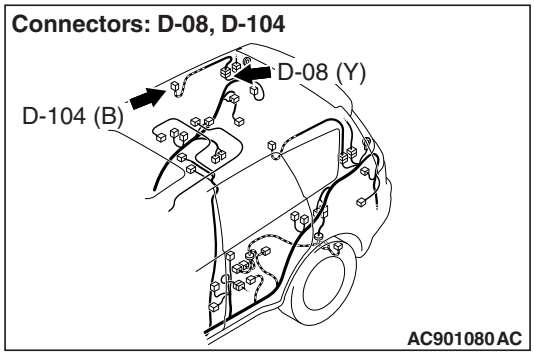

⚠ CAUTION

If DTC B1B23 is set in the SRS-ECU, always diagnose the CAN main bus line.

CIRCUIT OPERATION

- The SRS-ECU judges how severe a collision is by detecting signals from the side impact sensors installed on the lower side of the center pillar and at the quarter panel inner. If the impact is over a predetermined level, the SRS-ECU sends an ignition signal. At this time, if the side collision safing G-sensor is on, the SRS air bag will inflate.

- The ignition signal is input to the curtain air bag module (RH) to inflate the curtain air bag.

DTC SET CONDITIONS

This DTC is set if there is abnormal resistance between the input terminals of the curtain air bag module (RH) (squib).

TROUBLESHOOTING HITS

- Improper engaged connector or defective short spring*
- Short circuit between the curtain air bag module (RH) (squib) circuit terminals
- Damaged connector(s)
- Malfunction of the SRS-ECU

*NOTE: *: The squib circuit connectors integrate a "short" spring (which prevents the air bag from deploying unintentionally due to static electricity by shorting the positive wire to the ground wire in the squib circuit when the connectors are disconnected) (Refer to P.52B-28). Therefore, if connector C-27, D-08 or D-104 is damaged or improperly engaged, the short spring may not be released when the connector is connected.*

DIAGNOSIS

Required Special Tools:

- MB991958: Scan Tool (M.U.T.-III Sub Assembly)
  - MB991824: Vehicle Communication Interface (V.C.I.)
  - MB991827: M.U.T.-III USB Cable
  - MB991910: M.U.T.-III Main Harness A (Vehicles with CAN Communication System)
- MB991865: Dummy resistor
- MB991866: Resister harness

STEP 1. Using scan tool MB991958, diagnose the CAN bus line.

⚠ CAUTION

To prevent damage to scan tool MB991958, always turn the ignition switch to the "LOCK" (OFF) position before connecting or disconnecting scan tool MB991958.

(1) Connect scan tool MB991958. Refer to "How to connect the scan tool P.52B-28."
(2) Turn the ignition switch to the "ON" position.
(3) Diagnose the CAN bus line.
(4) Turn the ignition switch to the "LOCK" (OFF) position.

Q: Is the CAN bus line found to be normal?

YES : Go to Step 2.
NO : Repair the CAN bus line (Refer to GROUP 54C, Diagnosis P.54C-17).

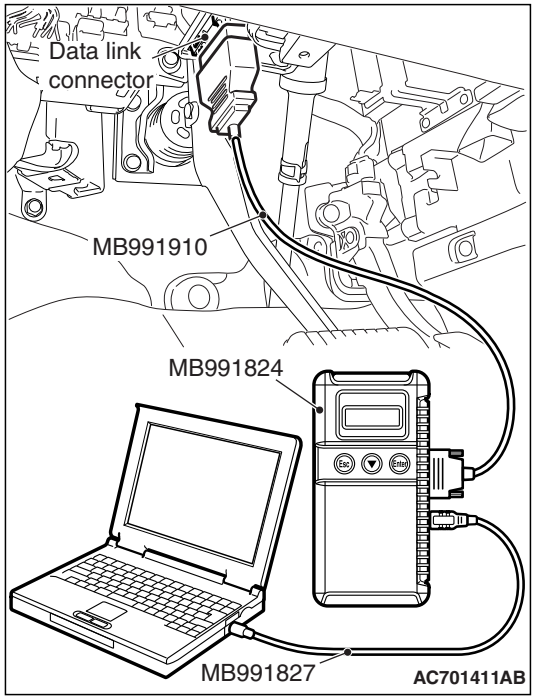

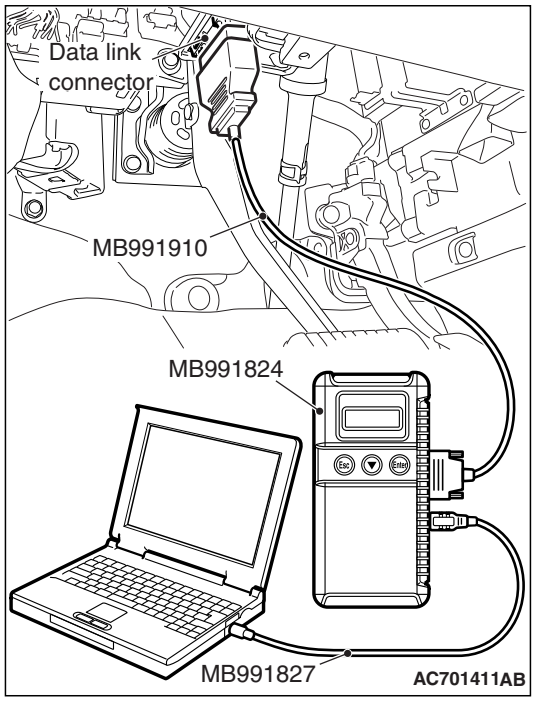

STEP 2. Recheck for diagnostic trouble code.

Check again if the DTC is set.

(1) Erase the DTC.
(2) Turn the ignition switch to "ON" position.
(3) Check if the DTC is set.
(4) Turn the ignition switch to the "LOCK" (OFF) position.

Q: Is the DTC set?

YES : Go to Step 3.

NO : There is an intermittent malfunction such as poor engaged connector(s) or open circuit (Refer to GROUP 00, How to Use Troubleshooting/Inspection Service Points –How to Cope with Intermittent Malfunctions P.00-15).

STEP 3. Check SRS-ECU connector C-27, curtain air bag module (RH) connector D-104 and intermediate connector D-08. (Using scan tool MB991958, read the diagnostic trouble code.)

(1) Disconnect the negative battery terminal.

(2) While pushing the part "A" indicated in the figure of the harness side connector, turn the lock lever to the direction of the arrow to release the lock lever, and disconnect the C-27 SRS-ECU connector. Then connect the connector.

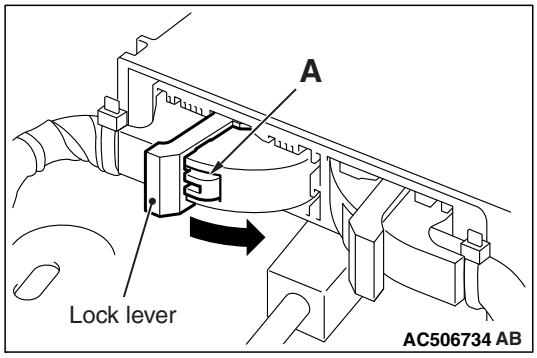

(3) Disconnect the D-104 connector, and then reconnect it. Use a flat-tipped (-) screwdriver to pull out the D-104 curtain air bag module harness side connector locking button toward the arrow direction, release the lock, and then disconnect the connector.

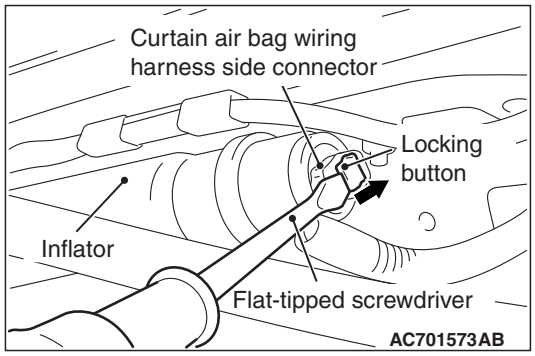

(4) Disconnect the D-08 connector's, and then reconnect them. Unlock the connector by sliding the locking button to the direction of the arrow as shown in the figure, and then disconnect the connector.

(5) Connect the negative battery terminal.

(6) After erasing the diagnostic trouble code memory, check the diagnostic trouble code again.

(7) Disconnect the negative battery terminal.

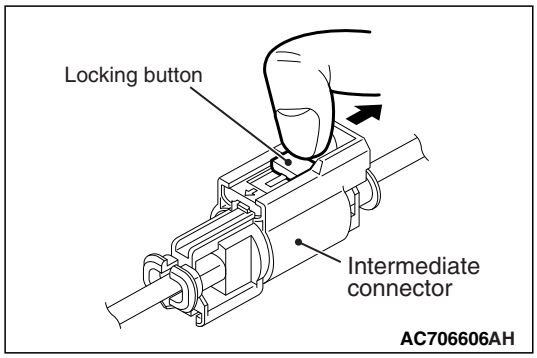

Q: Is DTC B1B23 set?

YES : Go to Step 4.

NO : Intermittent Malfunction (Refer to GROUP 00, How to Use Troubleshooting/Inspection Service Points –How to Cope with Intermittent Malfunction P.00-15).

STEP 4. Check by dummy resistor connection. (Using scan tool MB991958, read the diagnostic trouble code.)

(1) Disconnect the negative battery terminal.

(2) Disconnect the D-08 intermediate connector, unlock the connector by sliding the locking button to the direction of the arrow as shown in the figure, and then disconnect the connector.

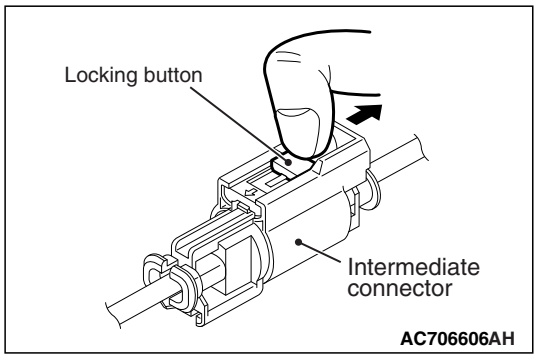

(3) Connect special tool MB991865 to special tool MB991866.

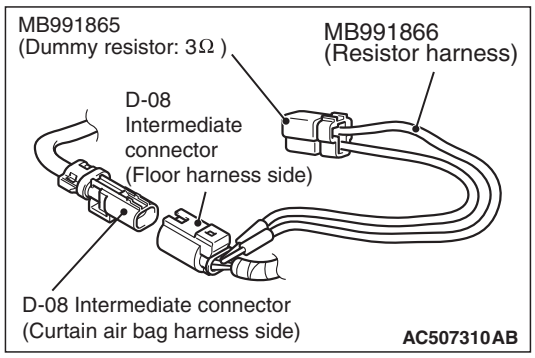

⚠ CAUTION

Do not insert a probe into the terminal from its front side directly, as the connector contact pressure may be weakened.

(4) Insert the probe of resistor harness, to which the dummy resistor is installed, from the back of D-08 intermediate connector (floor harness side).

(5) Connect the negative battery terminal.

(6) After erasing the diagnostic trouble code memory, check the diagnostic trouble code again.

Q: Is DTC B1B23 set?

YES : Go to Step 5.

NO : Go to Step 6.

STEP 5. Resistance measurement at the C-27 SRS-ECU connector.

(1) Disconnect the negative battery terminal.

(2) While pushing the part "A" indicated in the figure of the harness side connector, turn the lock lever to the direction of the arrow to release the lock lever, and disconnect the C-27 SRS-ECU connector.

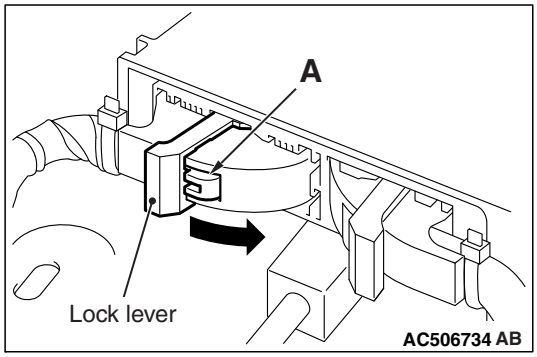

⚠ ***DANGER***

To prevent the air bag from deploying unintentionally, disconnect the intermediate connector D-08 to short the squib circuit.

(3) Disconnect the D-08 intermediate connector, unlock the connector by sliding the locking button to the direction of the arrow as shown in the figure, and then disconnect the connector.

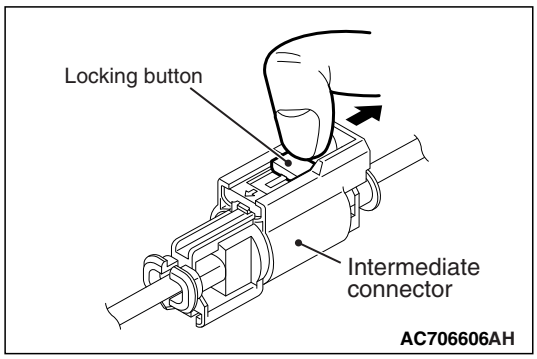

⚠ **CAUTION**

The short spring may not be released due to the insufficient insertion. Therefore, insert the insulator for 4 mm (0.6 inch) or more.

(4) Insert a cable tie [3 mm (0.12 inch) wide, 0.5 mm (0.02 inch) thick] between terminal 39, 40 and the short spring to release the short spring.

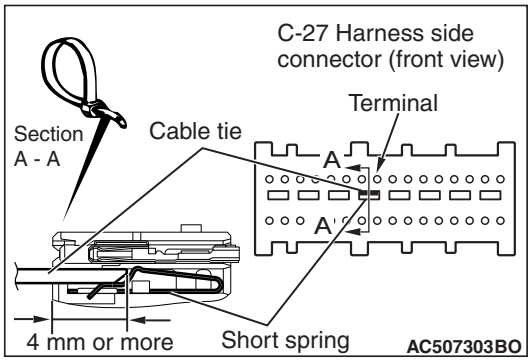

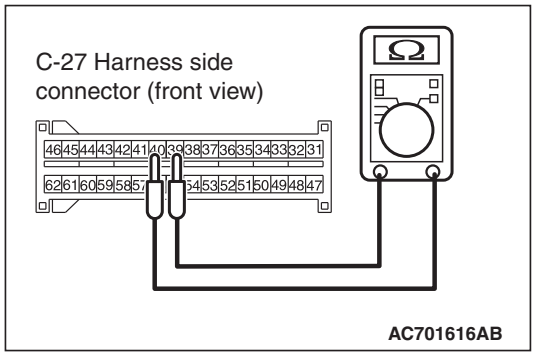

(5) Check for continuity between the C-27 wiring harness side connector terminal No. 39 and No. 40.
It should be open circuit.

Q: Is it open circuit?

YES : Go to Step 7.
NO : Repair the wiring harness.

STEP 6. Short circuit check between the D-104 curtain air bag module harness side connector and the D-08 intermediate harness.

(1) Disconnect the negative battery terminal.

⚠ DANGER

To prevent the air bag from deploying unintentionally, disconnect the curtain air bag module connector D-104 to short the squib circuit.

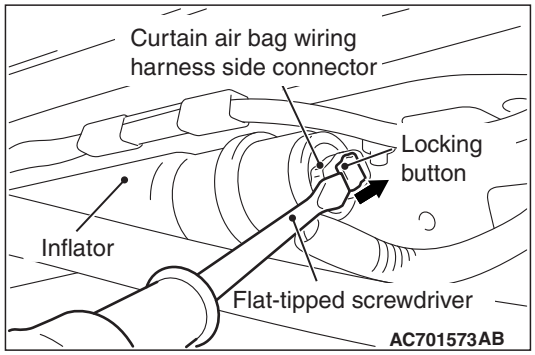

(2) Disconnect curtain air bag module (RH) D-104. Use a flat-tipped screwdriver to unlock the locking button at the harness side connector by withdrawing it toward you in two stages, and then disconnect the connector.

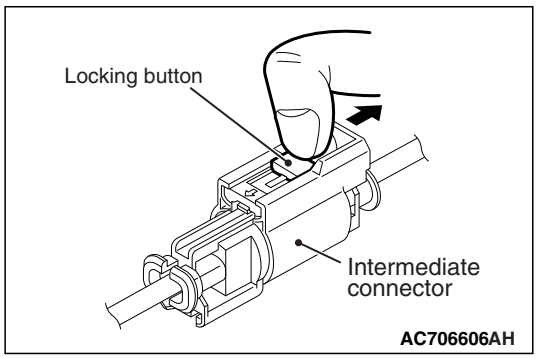

(3) Disconnect the D-08 intermediate connector, unlock the connector by sliding the locking button to the direction of the arrow as shown in the figure, and then disconnect the connector.

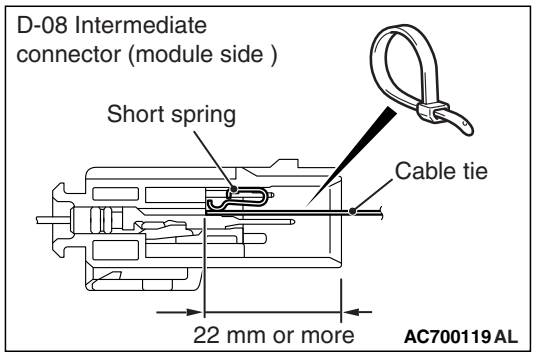

(4) Because the short spring is installed to the D-08 intermediate connector (curtain air bag harness side), insert a cable tie [3 mm (0.12 inch) wide, 0.5 mm (0.02 inch) thick] between terminals 1, 2 and the short spring to release the short spring.

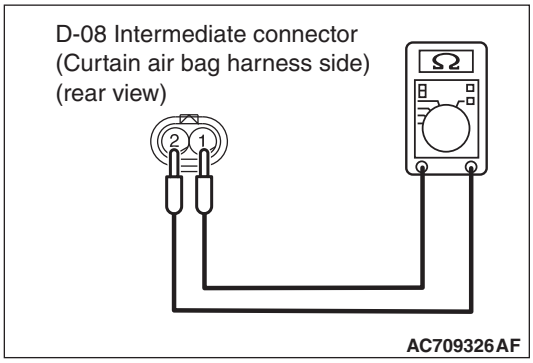

⚠ CAUTION

Do not insert a probe into the terminal from its front side directly, as the connector contact pressure may be weakened.

(5) Check for continuity between the D-08 intermediate connector (curtain air bag harness side) terminal No. 1 and No. 2.
It should be open circuit.

Q: Is it open circuit?

YES : Replace the curtain air bag module (RH) (Refer to P.52B-457). Then go to Step 7.

NO : Repair the wiring harness.

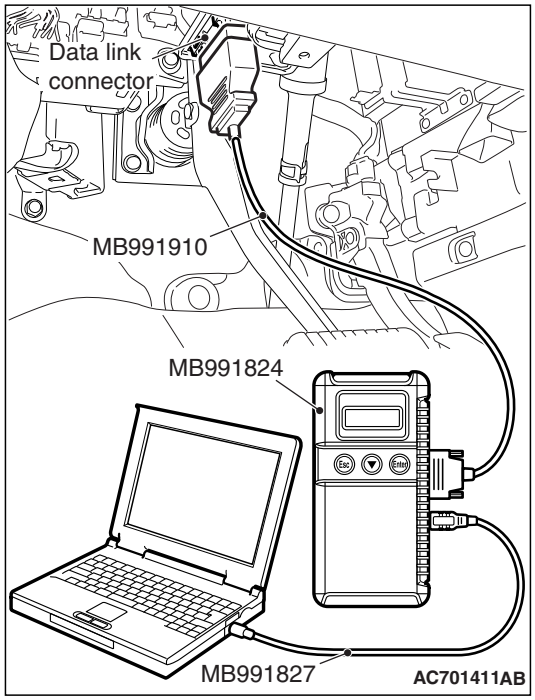

STEP 7. Recheck for diagnostic trouble code.

Check again if the DTC is set.

(1) Erase the DTC.
(2) Turn the ignition switch to the "ON" position.
(3) Check if the DTC is set.
(4) Turn the ignition switch to the "LOCK" (OFF) position.

Q: Is DTC B1B23 set?

YES : Replace SRS-ECU. (Refer to P.52B-440.)

NO : Intermittent Malfunction (Refer to GROUP 00, How to Use Troubleshooting/Inspection Service Points –How to Cope with Intermittent Malfunction P.00-15).

DTC B1B54: Seat Belt Buckle Switch (RH) Circuit (Ground Side) Shorted
DTC B1B55: Seat Belt Buckle Switch (RH) Circuit (Power Supply Side) Shorted
DTC B1B56: Seat Belt Buckle Switch (RH) Circuit Open

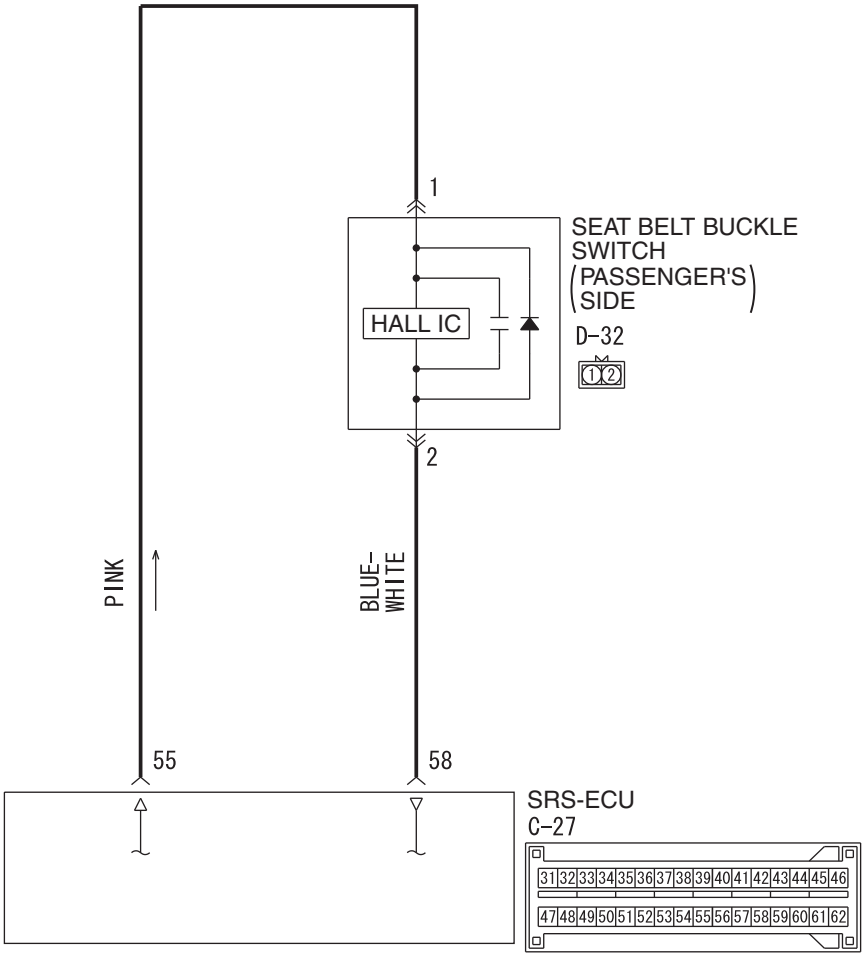

AC803441AC

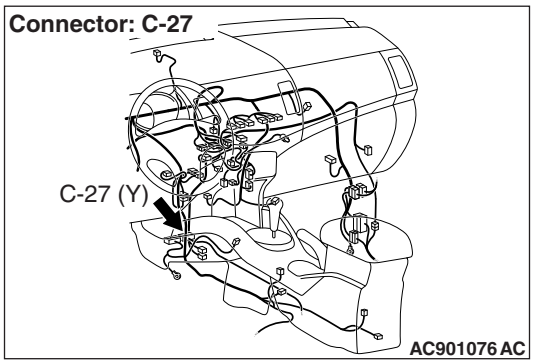

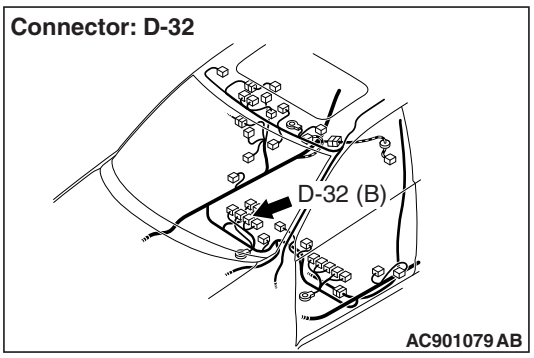

⚠ CAUTION

If DTC B1B54, B1B55 or B1B56 are set in the SRS-ECU, always diagnose the CAN main bus lines.

TSB Revision

CIRCUIT OPERATION

The SRS-ECU determines whether the seat belt is fastened or not according to the connection location of the seat belt buckle switch in the seat buckle.

DTC SET CONDITIONS

The DTC is set when the seat belt buckle switch output current is not within the specified range.

TROUBLESHOOTING HINTS

- Malfunction of the seat belt buckle switch
- Damaged wiring harnesses or connectors
- Malfunction of the SRS-ECU

DIAGNOSIS

Required Special Tools:

- MB991222: Probe
- MB991958: Scan Tool (M.U.T.-III Sub Assembly)
  - MB991824: Vehicle Communication Interface (V.C.I.)
  - MB991827: M.U.T.-III USB Cable
  - MB991910: M.U.T.-III Main Harness A (Vehicles with CAN communication system)

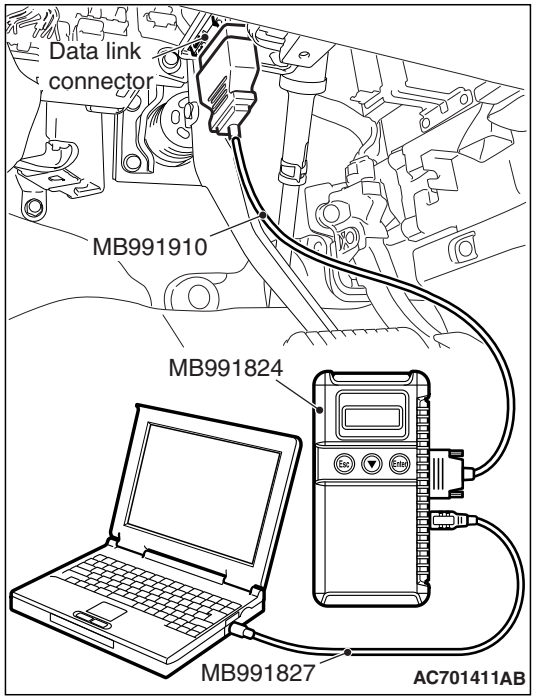

STEP 1. Using scan tool MB991958, diagnose the CAN bus line.

⚠ CAUTION

To prevent damage to scan tool MB991958, always turn the ignition switch to the "LOCK" (OFF) position before connecting or disconnecting scan tool MB991958.

(1) Connect scan tool MB991958. Refer to "How to connect the scan tool P.52B-28."
(2) Connect scan tool MB991958 to the data link connector.
(3) Turn the ignition switch to the "ON" position.
(4) Diagnose the CAN bus line.
(5) Turn the ignition switch to the "LOCK" (OFF) position.

Q: Is the CAN bus line found to be normal?

YES : Go to Step 2.
NO : Repair the CAN bus line (Refer to GROUP 54C, Diagnosis P.54C-17).

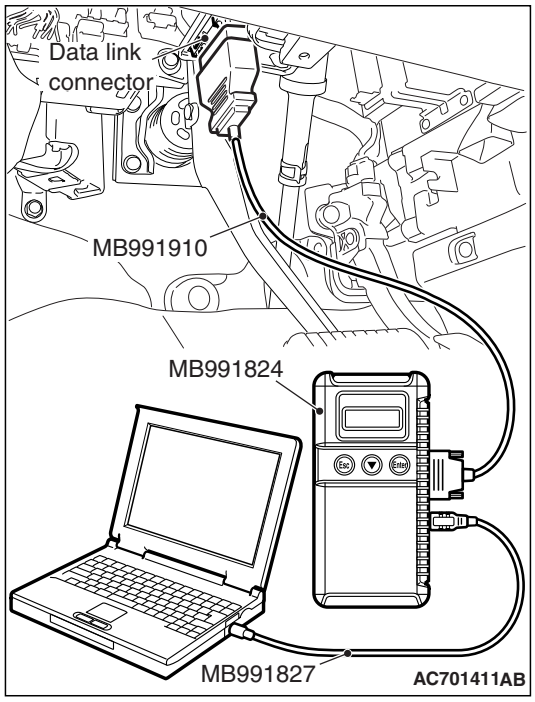

STEP 2. Recheck for diagnostic trouble code.

Check again if the DTC is set.

(1) Erase the DTC.
(2) Turn the ignition switch to "ON" position.
(3) Check if the DTC is set.
(4) Turn the ignition switch to the "LOCK" (OFF) position.

Q: Is the DTC set?

YES : Go to Step 3.

NO : There is an intermittent malfunction such as poor engaged connector(s) or open circuit (Refer to GROUP 00, How to Cope with Intermittent Malfunction P.00-15).

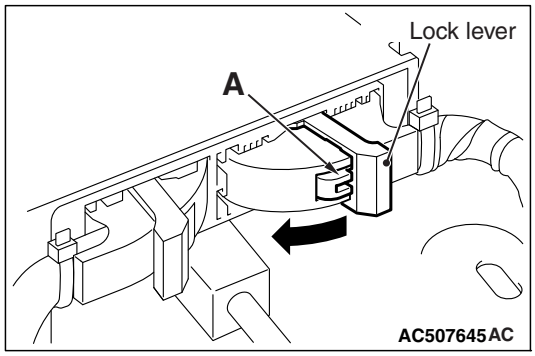

STEP 3. Check the harness short circuit between seat belt buckle switch (passenger's side) connector D-32 and the SRS-ECU connector C-27.

(1) Disconnect the negative battery terminal.
(2) Disconnect passenger's seat belt buckle switch connector D-32.
(3) While pushing the part "A" indicated in the figure of the harness side connector, turn the lock lever to the direction of the arrow to release the lock lever, and disconnect the C-27 SRS-ECU connector.

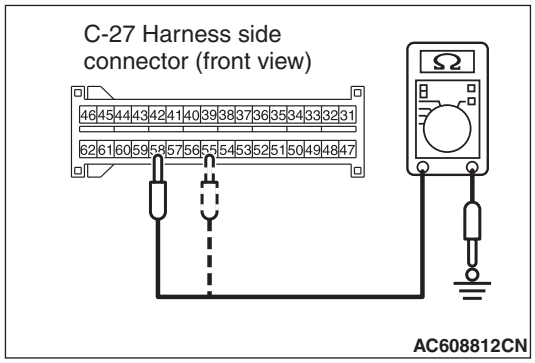

(4) Measure the resistance between terminal 55, 58 and body ground (DTC B1B54 only).
It should be an open circuit.

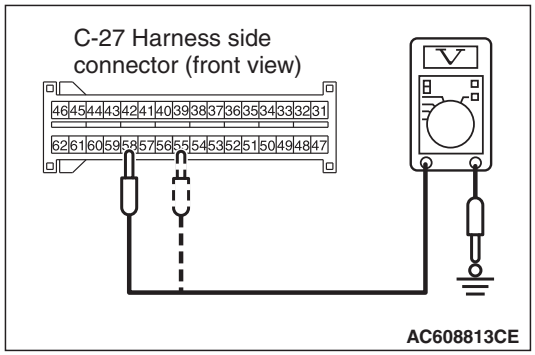

(5) Connect the negative battery terminal.
(6) Ignition switch: ON.
(7) Measure the voltage between terminal 55, 58 and body ground (No. B1B55 only).
Voltage should measure 1 volt or less.

Q: Is the check result normal?

YES : Go to Step 5.
NO : Go to Step 4.

STEP 4. Check the harness wires between SRS-ECU connector C-27 (terminal No.55 and 58) and the passenger's seat belt buckle switch connector D-32 (terminal No.1 and 2).

Q: Is the check result normal?

YES : Go to Step 6.
NO : Repair the harness wires between SRS-ECU connector C-27 and the passenger's seat belt buckle switch connector D-32. Then go to Step 6.

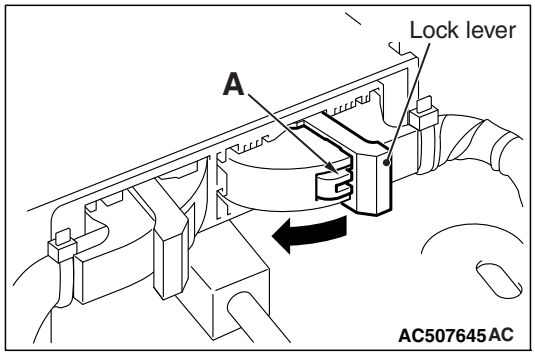

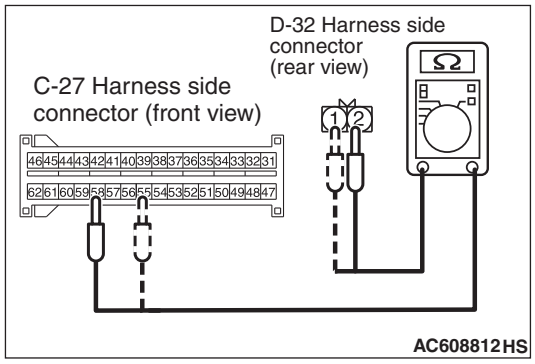

STEP 5. Check the harness wires between SRS-ECU connector C-27 (terminal No.55 and 58) and the passenger's seat belt buckle switch connector D-32 (terminal No.1 and 2).

(1) Disconnect the negative battery terminal.
(2) While pushing the part "A" indicated in the figure of the harness side connector, turn the lock lever to the direction of the arrow to release the lock lever, and disconnect the C-27 SRS-ECU connector.
(3) Disconnect the passenger's seat belt buckle switch connector D-32.

⚠ CAUTION

Do not insert a probe into the terminal from D-32 harness side connector front side directly, as the connector contact pressure may be weakened.

(4) Check for continuity between the following terminals. It should be less than 2 ohms <No.B1B56>.
- SRS-ECU connector C-27 (terminal No.55) and the passenger's seat belt buckle switch connector D-32 (terminal No.1)
- SRS-ECU connector C-27 (terminal No.58) and the passenger's seat belt buckle switch connector D-32 (terminal No.2)

Q: Is the check result normal?

YES : go to Step 6.
NO : Repair harness wires between SRS-ECU connector C-27 and the passenger's seat belt buckle switch connector D-32.

STEP 6. The passenger's seat belt buckle switch check.

Refer to GROUP 52A, Front Seat Belt P.52A-40

Q: Is the check result normal?

YES : Go to Step 7.
NO : Replace the passenger's seat belt buckle switch.

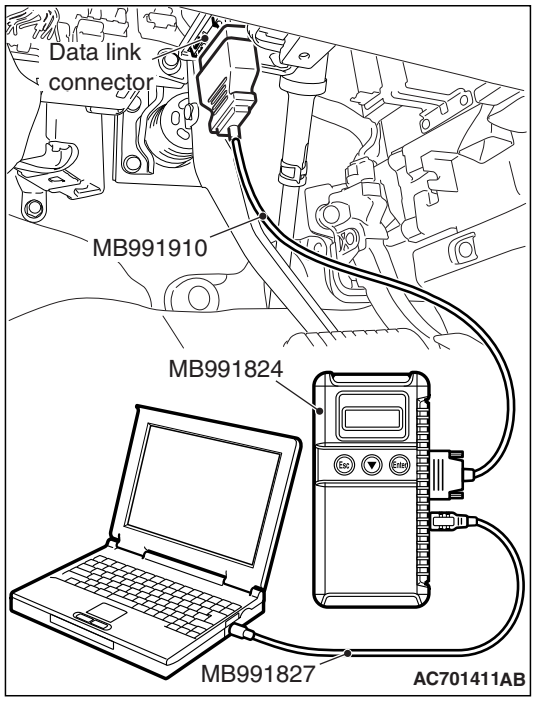

STEP 7. Recheck for diagnostic trouble code.

Check again if the DTC is set.
(1) Erase the DTC.
(2) Turn the ignition switch to the "ON" position.
(3) Check if the DTC is set.
(4) Turn the ignition switch to the "LOCK" (OFF) position.

Q: Is DTC B1B54, B1B55 or B1B56 set?

YES : Replace the SRS-ECU (Refer to P.52B-440).
NO : The procedure is complete.

DTC B1B70: Malfunction of G-sensor inside Front Impact Sensor (LH)
DTC B1B71: Malfunction of G-sensor inside Front Impact Sensor (RH)

⚠ CAUTION
If DTC B1B70 or B1B71 is set in the SRS-ECU, always diagnose the CAN main bus line.

DTC SET CONDITIONS

These DTCs are set if the following conditions are detected from the analog G-sensor inside the front impact sensor output:

- Analog G-sensor is not operating.
- Analog G-sensor characteristics are abnormal.
- Analog G-sensor output is abnormal.

TROUBLESHOOTING HINTS

Malfunction of front impact sensor (LH) (for DTC B1B70) and front impact sensor (RH) (for DTC B1B71)

DIAGNOSIS

Required Special Tool:

- MB991958: Scan Tool (M.U.T.-III Sub Assembly)
  - MB991824: Vehicle Communication Interface (V.C.I.)
  - MB991827: M.U.T.-III USB Cable
  - MB991910: M.U.T.-III Main Harness A (Vehicles with CAN communication system)

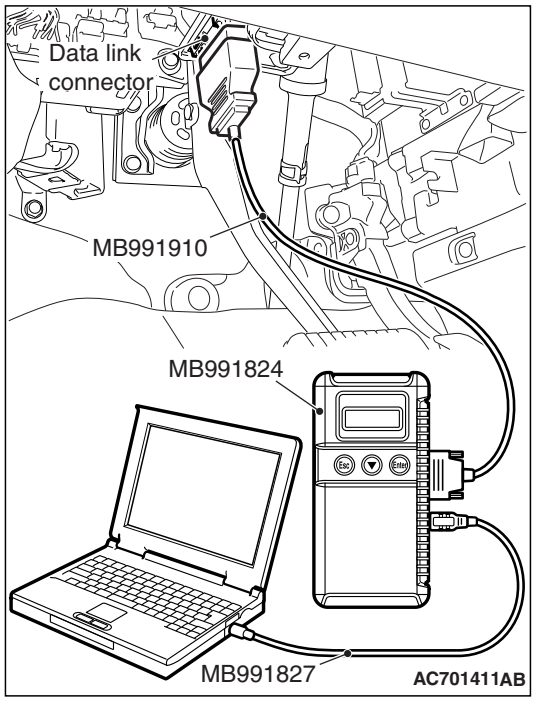

STEP 1. Using scan tool MB991958, diagnose the CAN bus line.

⚠ CAUTION

To prevent damage to scan tool MB991958, always turn the ignition switch to the "LOCK" (OFF) position before connecting or disconnecting scan tool MB991958.

(1) Connect scan tool MB991958. Refer to "How to connect the scan tool P.52B-28."
(2) Turn the ignition switch to the "ON" position.
(3) Diagnose the CAN bus line.
(4) Turn the ignition switch to the "LOCK" (OFF) position.

Q: Is the CAN bus line found to be normal?

YES : Go to Step 2.
NO : Repair the CAN bus line (Refer to GROUP 54C, Diagnosis P.54C-17).

STEP 2. Check the front impact sensor. (Using scan tool MB991958, read the diagnostic trouble code.)

(1) Disconnect the negative battery terminal.
(2) A front impact sensor is checked in the following way.
- Replace the front impact sensor (LH) {In case of code B1B70 (Regardless of "Active" or "Stored" faults)} with new part.
- Replace the front impact sensor (RH) {In case of code B1B71 (Regardless of "Active" or "Stored" faults)} with new part.

(3) Connect the negative battery terminal.
(4) After erasing the diagnostic trouble code memory, check the diagnostic trouble code again.

Q: Is either DTC B1B70 or B1B71 set?

YES : Go to Step 3.
NO : The procedure is complete.

STEP 3. Check the SRS-ECU (Using scan tool MB991958, read the diagnostic trouble code.)

(1) Disconnect the negative battery terminal.
(2) Replace the SRS-ECU with a new one. (Refer to P.52B-440).
(3) Connect the negative battery terminal.
(4) Check the diagnostic trouble code again.

Q: Is either DTC B1B70 or B1B71 set?

YES : Return to Step 1.
NO : The procedure is complete.

DTC B1B72: Malfunction of G-sensor Inside Side Impact Sensor (Front) (LH)
DTC B1B75: Malfunction of G-sensor Inside Side Impact Sensor (Front) (RH)

⚠ CAUTION
If the diagnostic trouble code B1B72 or B1B75 is set in the SRS-ECU, always diagnose the CAN main bus line.

DTC SET CONDITIONS

These DTCs are set if the following conditions are detected from the analog G-sensor inside the side impact sensor output:

- Analog G-sensor is not operating.
- Analog G-sensor characteristics are abnormal.
- Analog G-sensor output is abnormal.

TROUBLESHOOTING HINTS

Malfunction of side impact sensor (front) (LH) (for DTC B1B72) and side impact sensor (front) (RH) (for DTC B1B75)

DIAGNOSTIC PROCEDURE

Required Special Tools:

- MB991958: Scan Tool (M.U.T.-III Sub Assembly)
  - MB991824: Vehicle Communication Interface (V.C.I.)
  - MB991827: M.U.T.-III USB Cable
  - MB991910: M.U.T.-III Main Harness A (Vehicles with CAN communication system)

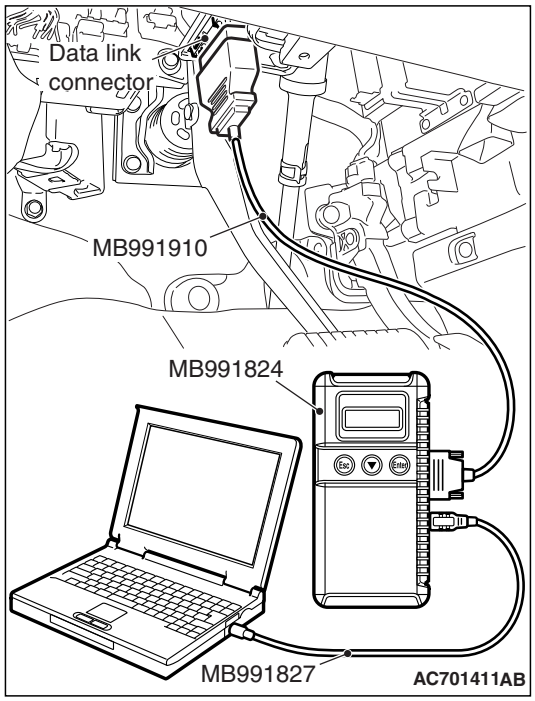

STEP 1. Using scan tool MB991958, diagnose the CAN bus line.

⚠ CAUTION

To prevent damage to scan tool MB991958, always turn the ignition switch to the "LOCK" (OFF) position before connecting or disconnecting scan tool MB991958.

(1) Connect scan tool MB991958. Refer to "How to connect the scan tool P.52B-28."
(2) Turn the ignition switch to the "ON" position.
(3) Diagnose the CAN bus line.
(4) Turn the ignition switch to the "LOCK" (OFF) position.

Q: Is the CAN bus line found to be normal?

YES : Go to Step 2.
NO : Repair the CAN bus line (Refer to GROUP 54C, Diagnosis P.54C-17).

STEP 2. Check the side impact sensor. (Using scan tool MB991958, read the diagnostic trouble code.)

(1) Disconnect the negative battery terminal.
(2) A side impact sensor is checked in the following way.
- Replace the side impact sensor (front) (LH) {In case of code B1B72 (Regardless of "Active" or "Stored" faults)} with the new part.
- Replace the side impact sensor (front) (RH) {In case of code B1B75 (Regardless of "Active" or "Stored" faults)} with the new part.

(3) Connect the negative battery terminal.
(4) After erasing the diagnostic trouble code memory, check the diagnostic trouble code again.

Q: Is either DTC B1B72 or B1B75 set?

YES : Go to Step 3.
NO : The procedure is complete.

STEP 3. Check the SRS-ECU (Using scan tool MB991958, read the diagnostic trouble code.)

(1) Disconnect the negative battery terminal.
(2) Replace the SRS-ECU with a new one. (Refer to P.52B-440).
(3) Connect the negative battery terminal.
(4) Check the diagnostic trouble code again.

Q: Is either DTC B1B72 or B1B75 set?

YES : Return to Step 1.
NO : The procedure is complete.

DTC B1B73: Malfunction of G-sensor Inside Side Impact Sensor (Rear) (LH)
DTC B1B76: Malfunction of G-sensor Inside Side Impact Sensor (Rear) (RH)

⚠ CAUTION
If DTC B1B73 or B1B76 is set in the SRS-ECU, always diagnose the CAN main bus line.

DTC SET CONDITIONS

These DTCs are set if the following conditions are detected from the analog G-sensor inside the side impact sensor output:

- Analog G-sensor is not operating.
- Analog G-sensor characteristics are abnormal.
- Analog G-sensor output is abnormal.

TROUBLESHOOTING HINTS

Malfunction of side impact sensor (rear) (LH) (for DTC B1B73) and impact sensor (rear) (RH) (for DTC B1B76)

DIAGNOSIS

Required Special Tools:

- MB991958: Scan Tool (M.U.T.-III Sub Assembly)
  - MB991824: Vehicle Communication Interface (V.C.I.)
  - MB991827: M.U.T.-III USB Cable
  - MB991910: M.U.T.-III Main Harness A (Vehicles with CAN Communication System)

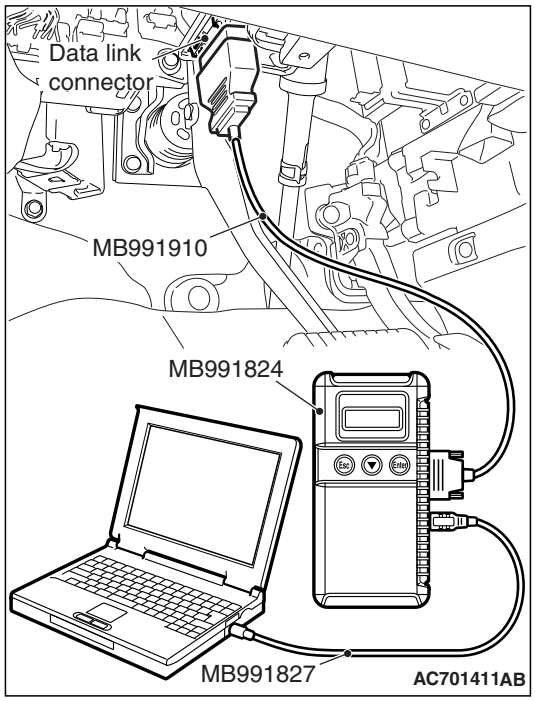

STEP 1. Using scan tool MB991958, diagnose the CAN bus line.

⚠ CAUTION

To prevent damage to scan tool MB991958, always turn the ignition switch to the "LOCK" (OFF) position before connecting or disconnecting scan tool MB991958.

(1) Connect scan tool MB991958. Refer to "How to connect the scan tool P.52B-28."
(2) Turn the ignition switch to the "ON" position.
(3) Diagnose the CAN bus line.
(4) Turn the ignition switch to the "LOCK" (OFF) position.

Q: Is the CAN bus line found to be normal?

YES : Go to Step 2.
NO : Repair the CAN bus line (Refer to GROUP 54C, Diagnosis P.54C-17).

STEP 2. Check the side impact sensor. (Using scan tool MB991958, read the diagnostic trouble code.)

(1) Disconnect the negative battery terminal.
(2) A side impact sensor is checked in the following way.
- Replace the side impact sensor (rear) (LH) {In case of code B1B73 (Regardless of "Active" or "Stored" faults)} with the new part.
- Replace the side impact sensor (rear) (RH) {In case of code B1B76 (Regardless of "Active" or "Stored" faults)} with the new part.

(3) Connect the negative battery terminal.
(4) After erasing the diagnostic trouble code memory, check the diagnostic trouble code again.

Q: Is either DTC B1B73 or B1B76 set?

YES : Go to Step 3.
NO : The procedure is complete.

STEP 3. Check the SRS-ECU (Using scan tool MB991958, read the diagnostic trouble code.)

(1) Disconnect the negative battery terminal.
(2) Replace the SRS-ECU with a new one. (Refer to P.52B-440).
(3) Connect the negative battery terminal.
(4) Check the diagnostic trouble code again.

Q: Is either DTC B1B73 or B1B76 set?

YES : Return to Step 1.
NO : The procedure is complete.

DTC B1BA3: Driver's Seat Slide Sensor Malfunction (Occupant Classification-ECU)
DTC B1BA4: Passenger's Seat Slide Sensor Malfunction (Occupant Classification-ECU)

⚠ CAUTION
If DTC B1BA3 or B1BA4 is set in the Occupant classification-ECU, always diagnose the CAN main bus line.

DTC SET CONDITION

These DTCs are set if communication between the occupant classification-ECU and the seat slide sensor is not possible or communication is faulty.

TROUBLESHOOTING HINTS

- Malfunction of the seat slide sensor
- Malfunction of occupant classification-ECU

DIAGNOSIS

Required Special Tools:

- MB991958: Scan Tool (M.U.T.-III Sub Assembly)
  - MB991824: Vehicle Communication Interface (V.C.I.)
  - MB991827: M.U.T.-III USB Cable
  - MB991910: M.U.T.-III Main Harness A (Vehicles with CAN communication system)

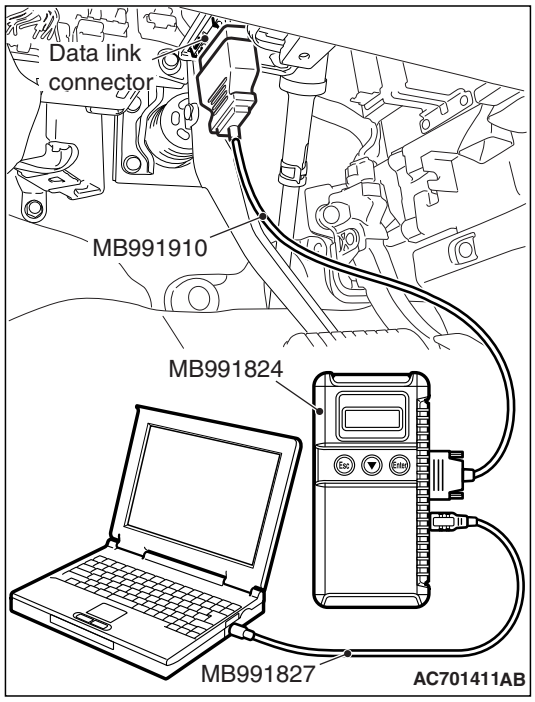

STEP 1. Using scan tool MB991958, diagnose the CAN bus line.

⚠ CAUTION

To prevent damage to scan tool MB991958, always turn the ignition switch to the "LOCK" (OFF) position before connecting or disconnecting scan tool MB991958.

(1) Connect scan tool MB991958. Refer to "How to connect the scan tool P.00-15."
(2) Turn the ignition switch to the "ON" position.
(3) Diagnose the CAN bus line.
(4) Turn the ignition switch to the "LOCK" (OFF) position.

Q: Is the CAN bus line found to be normal?

YES : Go to Step 2.
NO : Repair the CAN bus line (Refer to GROUP 54C, Diagnosis P.54C-17).

STEP 2. Using scan tool MB991958, read the occupant classification-ECU diagnostic trouble code.

Check if the DTC is set to the occupant classification-ECU.

Q: Is DTC set?

YES : Diagnose the occupant classification-ECU.
NO : Go to Step 3.

STEP 3. Recheck for diagnostic trouble code.

Check again if the DTC is set.
(1) Erase the DTC.
(2) Turn the ignition switch to the "ON" position.
(3) Check if the DTC is set.
(4) Turn the ignition switch to the "LOCK" (OFF) position.

Q: Is the DTC set?

YES : Replace the SRS-ECU (Refer to P.52B-440).
NO : There is an intermittent malfunction such as poor engaged connector(s) or open circuit (Refer to GROUP 00, How to Cope with Intermittent Malfunction P.00-15).

DTC B1BA5: SRS-ECU squib count mismatch

⚠ CAUTION
If DTC B1BA5 is set in the SRS-ECU, always diagnose the CAN main bus line.

CIRCUIT OPERATION

SRS-ECU monitors the resistance value of each squib circuit on the vehicle. If any of the resistance values is outside the normal range, SRS-ECU sets the DTC.

DTC SET CONDITION

If an SRS-ECU different from the unit compatible to vehicle is accidentally installed, this DTC will be set. (If SRS-ECU for the vehicles without side-air bag is installed to the vehicles with side-air bag.)

TROUBLESHOOTING HINTS

- SRS-ECU incorrect installation
- Squib specification mismatch

DIAGNOSIS

Required Special Tools:

- MB991958: Scan Tool (M.U.T.-III Sub Assembly)
  - MB991824: Vehicle Communication Interface (V.C.I.)
  - MB991827: M.U.T.-III USB Cable
  - MB991910: M.U.T.-III Main Harness A (Vehicles with CAN communication system)

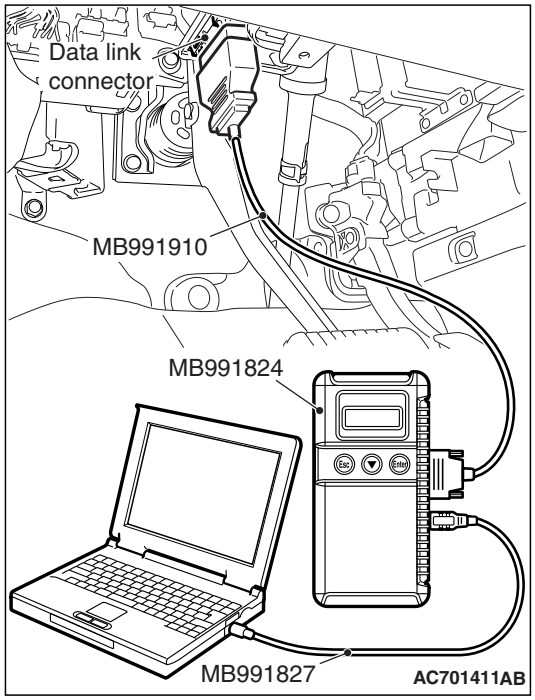

STEP 1. Using scan tool MB991958, diagnose the CAN bus line.

⚠ CAUTION
To prevent damage to scan tool MB991958, always turn the ignition switch to the "LOCK" (OFF) position before connecting or disconnecting scan tool MB991958.

(1) Connect scan tool MB991958. Refer to "How to connect the scan tool P.52B-28."
(2) Turn the ignition switch to the "ON" position.
(3) Diagnose the CAN bus line.
(4) Turn the ignition switch to the "LOCK" (OFF) position.

Q: Is the CAN bus line found to be normal?

YES : Go to Step 2.
NO : Repair the CAN bus line (Refer to GROUP 54C, Diagnosis P.54C-17).

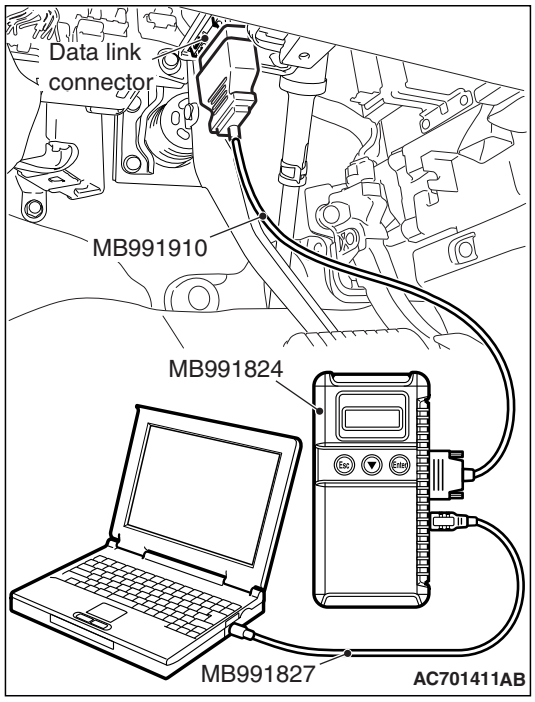

STEP 2. Recheck for diagnostic trouble code.

Check again if the DTC is set.

(1) Turn the ignition switch to the "ON" position.
(2) Check if the DTC is set.
(3) Turn the ignition switch to the "LOCK" (OFF) position.

Q: Is the DTC set?

YES : Replace the SRS-ECU (Refer to P.52B-440).

NO : There is an intermittent malfunction such as poor engaged connector(s) or open circuit (Refer to GROUP 00, How to Cope with Intermittent Malfunction P.00-15).

DTC B1BAA: Occupant Classification-ECU Configuration Mismatch

⚠ CAUTION

- **If the DTC B1BAA is set, diagnose the CAN main bus lines.**
- **When replacing the ECU, always check that the communication circuit is normal.**

DTC SET CONDITION

If the information data and coding data on occupant classification-ECU do not suit. The SRS-ECU sets the DTC B1BAA

TROUBLESHOOTING HINTS

- The CAN bus line may be defective
- The ETACS-ECU may be defective
- The occupant Classification-ECU may be defective
- The SRS-ECU may be defective

DIAGNOSIS

Required Special Tools:

- MB991958: Scan Tool (M.U.T.-III Sub Assembly)
  - MB991824: Vehicles Communication Interface (V.C.I.)
  - MB991827: M.U.T.-III USB Cable
  - MB991910: M.U.T.-III Main Harness A (Vehicles with CAN communication system)

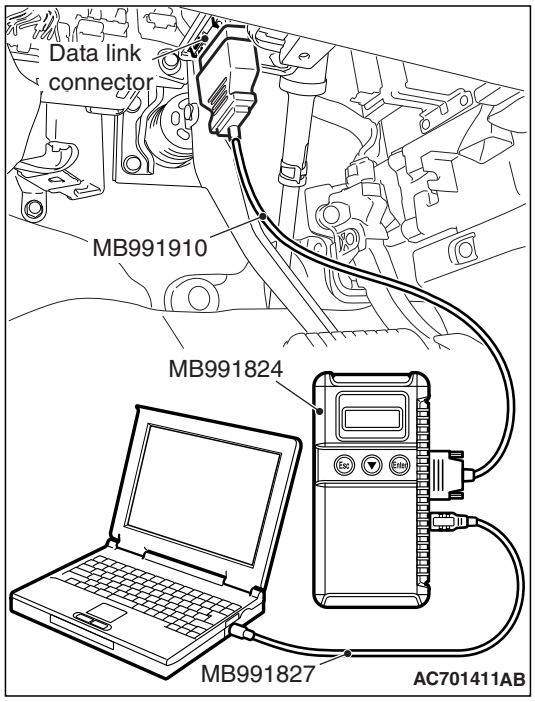

STEP 1. Using scan tool MB991958, diagnose the CAN bus line

⚠ CAUTION

To prevent damage to scan tool MB991958, always turn the ignition switch to the "LOCK" (OFF) position before connecting or disconnecting scan tool MB991958.

(1) Connect scan tool MB991958. Refer to "How to connect the scan tool P.52B-28."
(2) Turn the ignition switch to the "ON" position.
(3) Diagnose the CAN bus line.
(4) Turn the ignition switch to the "LOCK" (OFF) position.

Q: Is the CAN bus line found to be normal?

YES : Go to Step 2.
NO : Repair the CAN bus line. (Refer to GROUP 54C, Diagnosis P.54C-17).

STEP 2. Using scan tool MB991958, read the ETACS-ECU diagnostic trouble code

Check if DTC is set to the ETACS-ECU.

Q: Is the DTC set?

YES : Troubleshoot the ETACS-ECU (Refer to GROUP 54A, Diagnosis P.54A-742). Then go to Step 4.
NO : Go to Step 3.

STEP 3. Using scan tool MB991958, read the occupant classification-ECU diagnostic trouble code

Check if DTC is set to the occupant classification-ECU.

Q: Is the DTC set?

YES : Troubleshoot the occupant classification-ECU (Refer to P.52B-346). Then go to Step 4.
NO : Go to Step 4.

STEP 4. Recheck for diagnostic trouble code.

Check again if the DTC is set to the SRS-ECU.

(1) Erase the DTC.
(2) Turn the ignition switch from "LOCK" (OFF) position to "ON" position.
(3) Check if DTC is set.
(4) Turn the ignition switch to the "LOCK" (OFF) position.

Q: Is the DTC set?

YES : Replace the SRS-ECU (Refer to P.52B-440).

NO : There is an intermittent malfunction such as poor engaged connector(s) or open circuit (Refer to GROUP 00, How to use Troubleshooting/inspection Service Points P.00-15).

DTC B1BC7: SRS-ECU (Record Data Full) System

⚠ CAUTION

If the diagnostic trouble code B1BC7 is set to SRS-ECU, always diagnose the CAN main bus line.

CIRCUIT OPERATION

If SRS-ECU determines that a collision has occurred, it sends the ignition current to deploy the air bag. It stores the deployment status. If this DTC is set, SRS-ECU determines that the air bag has been deployed.

DTC SET CONDITIONS

This DTC is set after the air bag deployment. If this DTC is set before the air bag is deployed, an internal failure may have occurred in SRS-ECU.

TROUBLESHOOTING HINTS

Malfunction of SRS-ECU

DIAGNOSIS

Required Special Tools:

- MB991958: Scan Tool (M.U.T.-III Sub Assembly)
  - MB991824: Vehicle Communication Interface (V.C.I.)
  - MB991827: M.U.T.-III USB Cable
  - MB991910: M.U.T.-III Main Harness A (Vehicles with CAN communication system)

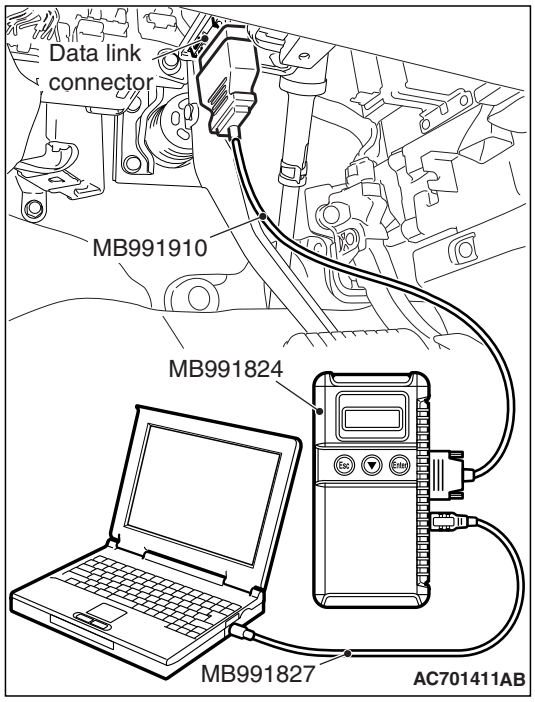

STEP 1. Using scan tool MB991958, diagnose the CAN bus line.

⚠ CAUTION

To prevent damage to scan tool MB991958, always turn the ignition switch to the "LOCK" (OFF) position before connecting or disconnecting scan tool MB991958.

(1) Connect scan tool MB991958. Refer to "How to connect the scan tool P.52B-28."
(2) Turn the ignition switch to the "ON" position.
(3) Diagnose the CAN bus line.
(4) Turn the ignition switch to the "LOCK" (OFF) position.

Q: Is the CAN bus line found to be normal?

YES : Go to Step 2.
NO : Repair the CAN bus line (Refer to GROUP 54C, Diagnosis P.54C-17).

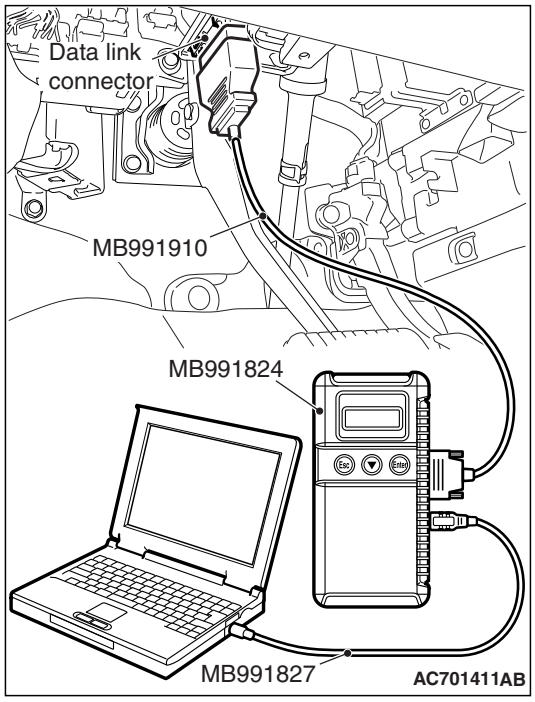

STEP 2. Recheck for diagnostic trouble code.

Check again if the DTC is set.
(1) Turn the ignition switch to the "ON" position.
(2) Check if the DTC is set.
(3) Turn the ignition switch to the "LOCK" (OFF) position.

Q: Are any "Stored" or "Active" DTC B1BC7 output?

YES : Replace the SRS-ECU (Refer to P.52B-440).
NO : There is an intermittent malfunction such as poor engaged connector(s) or open circuit (Refer to GROUP 00, How to Cope with Intermittent Malfunction P.00-15).

DTC B1BCF: Roll Over Sensor Malfunction
DTC B2207: Occupant Restraint Controller Internal 1
DTC B2208: Occupant Restraint Controller Internal 2
DTC B2209: Occupant Restraint Controller Internal 3
DTC B220A: Occupant Restraint Controller Internal 4
DTC B220B: Occupant Restraint Controller Internal Firing Stored Energy
DTC B220C: Occupant Restraint Controller Accelerometer 1
DTC B220D: Occupant Restraint Controller Accelerometer 2

⚠ CAUTION
If DTCs are set in the SRS-ECU, always diagnose the CAN main bus line.

TROUBLE JUDGMENT

The above DTC is set if an abnormality is detected in the circuit inside the SRS-ECU.

TROUBLESHOOTING HINTS

Malfunction of the SRS-ECU

DIAGNOSIS

Required Special Tools:

- MB991958: Scan Tool (M.U.T.-III Sub Assembly)
  - MB991824: Vehicle Communication Interface (V.C.I.)
  - MB991827: M.U.T.-III USB Cable
  - MB991910: M.U.T.-III Main Harness A (Vehicles with CAN communication system)

STEP 1. Using scan tool MB991958, diagnose the CAN bus line

⚠ CAUTION
To prevent damage to scan tool MB991958, always turn the ignition switch to the "LOCK" (OFF) position before connecting or disconnecting scan tool MB991958.

(1) Connect scan tool MB991958. Refer to "How to connect the scan tool P.52B-28."
(2) Turn the ignition switch to the "ON" position.
(3) Diagnose the CAN bus line.
(4) Turn the ignition switch to the "LOCK" (OFF) position.

Q: Is the CAN bus line found to be normal?

YES : Go to Step 2.
NO : Repair the CAN bus line. (Refer to GROUP 54C, Diagnosis P.54C-17).

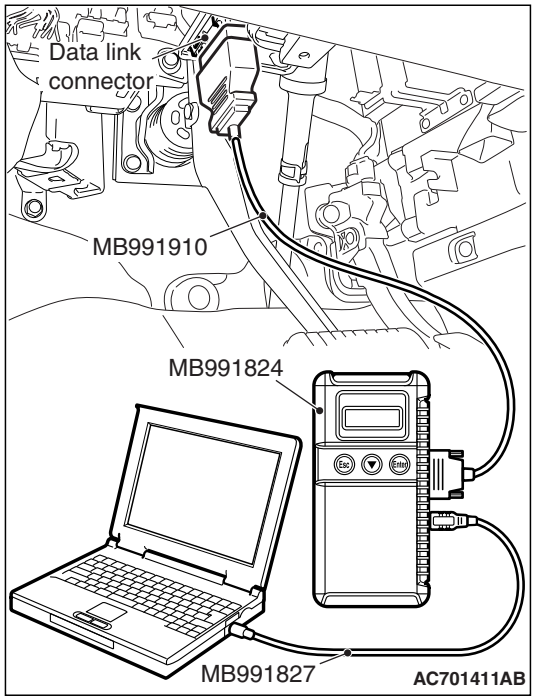

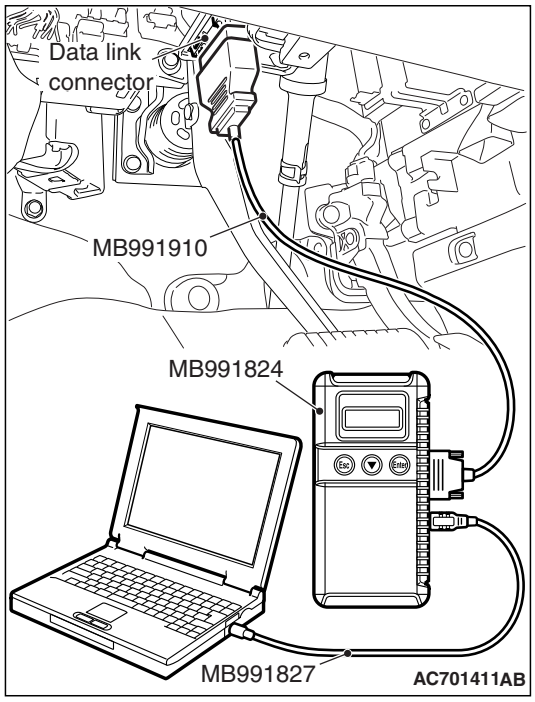

STEP 2. Recheck for diagnostic trouble code.

Check again if the DTC is set.

(1) Turn the ignition switch to the "ON" position.

(2) Check if the DTC is set.

(3) Turn the ignition switch to the "LOCK" (OFF) position.

Q: Are the DTCs output regardless of "Active" or "Stored" faults?

YES : Replace the SRS-ECU (Refer to P.52B-440).

NO : There is an intermittent malfunction such as poor engaged connector(s) or open circuit (Refer to GROUP 00, How to Cope with Intermittent Malfunction P.00-15).

DTC B1C27: Side-air bag Module (LH) (Squib) System (Shorted to Squib Circuit Ground)

Side-Airbag Module (Squib) (LH) Circuit

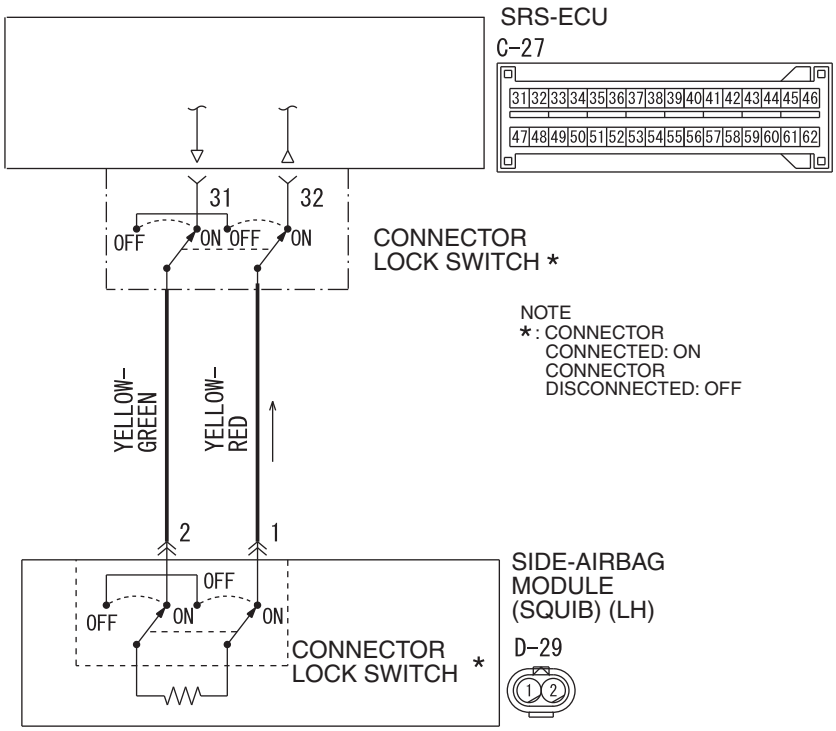

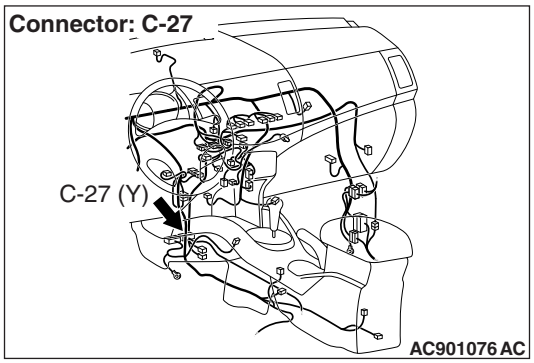

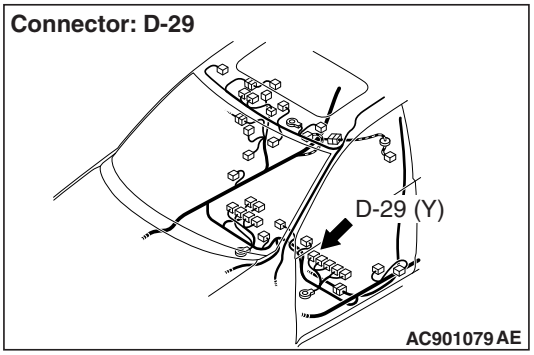

⚠ CAUTION

If DTC B1C27 is set in the SRS-ECU, always diagnose the CAN bus lines.

CIRCUIT OPERATION

- The SRS-ECU judges how severe a collision is by detecting signals from the side impact sensor installed on the lower side of the center pillar. If the impact is over a predetermined level, the SRS-ECU sends an ignition signal. At this time, if the side collision safing G-sensor is on, the SRS air bag will inflate.
- The ignition signal is input to the side-air bag module to inflate the side-air bag.

DTC SET CONDITIONS

This DTC is set if there is abnormal resistance between the input terminals of the side-air bag module (LH) (squib).

TROUBLESHOOTING HINTS

- Damaged wiring harnesses or connectors
- Short to ground in the left hand side-air bag module (squib) harness
- Malfunction of the SRS-ECU

DIAGNOSIS

Required Special Tools:

- MB991958: Scan Tool (M.U.T.-III Sub Assembly)
  - MB991824: Vehicle Communication Interface (V.C.I.)
  - MB991827: M.U.T.-III USB Cable
  - MB991910: M.U.T.-III Main Harness A (Vehicles with CAN communication system)
- MB991865: Dummy resistor
- MB991866: Resister harness

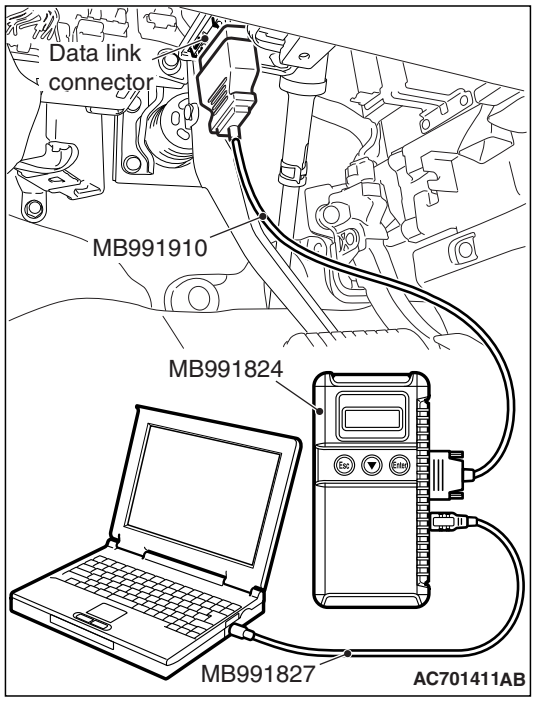

STEP 1. Using scan tool MB991958, diagnose the CAN bus line.

⚠ CAUTION

To prevent damage to scan tool MB991958, always turn the ignition switch to the "LOCK" (OFF) position before connecting or disconnecting scan tool MB991958.

(1) Connect scan tool MB991958. Refer to "How to connect the scan tool P.52B-28."
(2) Turn the ignition switch to "ON" position.
(3) Diagnose the CAN bus line.
(4) Turn the ignition switch to the "LOCK" (OFF) position.

Q: Is the check result satisfactory?

YES : Go to Step 2.
NO : Repair the CAN bus line (Refer to GROUP 54C, Diagnosis P.54C-17).

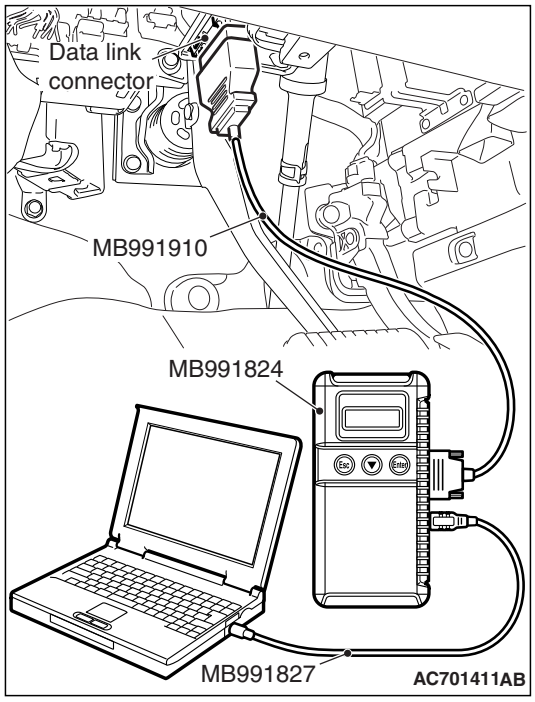

STEP 2. Recheck for diagnostic trouble code.

Check again if the DTC is set.
(1) Erase the DTC.
(2) Turn the ignition switch to "ON" position.
(3) Check if the DTC is set.
(4) Turn the ignition switch to the "LOCK" (OFF) position.

Q: Is the DTC set?

YES : Go to Step 3.
NO : There is an intermittent malfunction such as poor engaged connector(s) or open circuit (Refer to GROUP 00, How to Cope with Intermittent Malfunction P.00-15).

STEP 3. Check the side-air bag module (LH). (Using scan tool MB991958, read the diagnostic trouble code.)

(1) Disconnect the negative battery terminal.

(2) Disconnect the D-29 side-airbag module connector, unlock the connector by sliding the locking button to the direction of the arrow as shown in the figure, and then disconnect the connector.

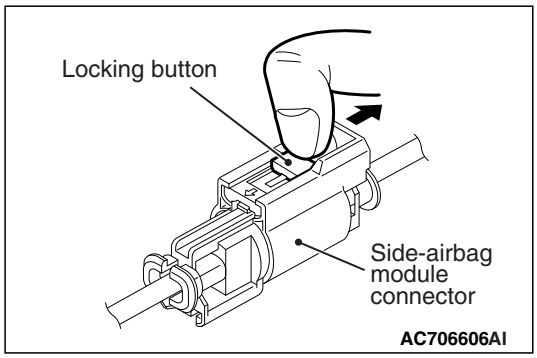

(3) Connect special tool MB991865 to special tool MB991866.

⚠ CAUTION

Do not insert a test probe into the terminal from its front side directly, as the connector contact pressure may be weakened.

(4) Insert special tool MB991866 into the D-29 harness side connector by backprobing.

(5) Connect the negative battery terminal.

(6) Erase the diagnostic trouble code memory, and check the diagnostic trouble code.

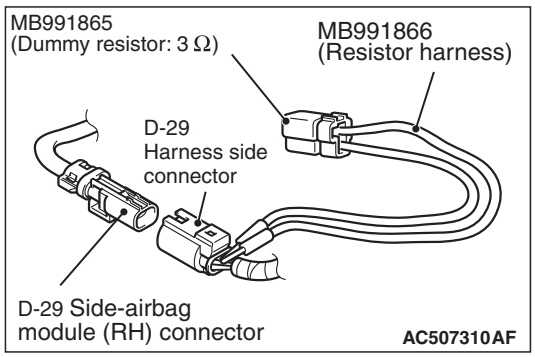

Q: Is DTC B1C27 set?

YES : Go to Step 4.

NO : Replace the seatback assembly (Refer to GROUP 52A, Front Seat Assembly P.52A-19). Then go to Step 6.

STEP 4. Check the side-air bag module (LH) circuit.
Measure the resistance at the SRS-ECU connector C-27.

(1) Disconnect the negative battery terminal.
(2) While pushing the part "A" indicated in the figure of the harness side connector, turn the lock lever to the direction of the arrow to release the lock lever, and disconnect the C-27 SRS-ECU connector.

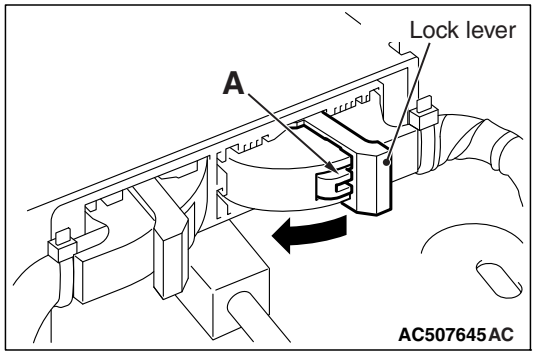

⚠ DANGER

To prevent the air bag from deploying unintentionally, disconnect the side-airbag module (LH) connector D-29 to short the squib circuit.

(3) Disconnect the D-29 side-airbag module connector, unlock the connector by sliding the locking button to the direction of the arrow as shown in the figure, and then disconnect the connector.

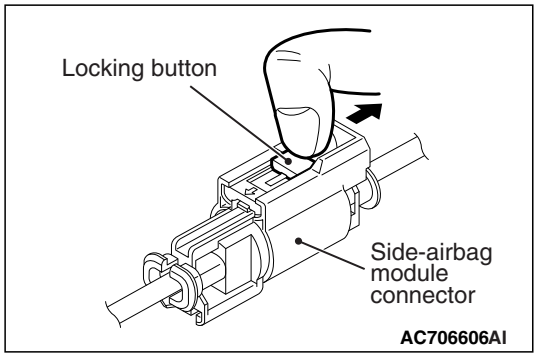

⚠ CAUTION

Insert an insulator such as a cable tie to a depth of 4mm (0.16 inch) or more, otherwise the short spring will not be released.

(4) Insert a cable tie [3 mm (0.12 inch) wide, 0.5 mm (0.02 inch) thick] between terminals 31, 32 and the short spring to release the short spring.

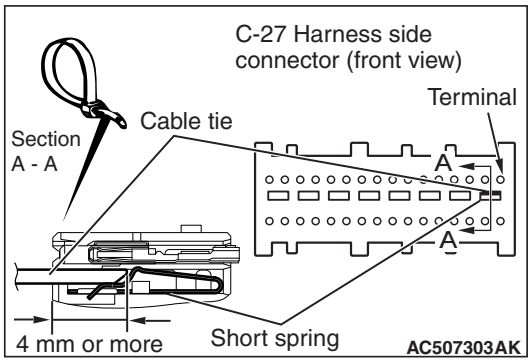

(5) Check for continuity between C-27 harness side connector terminals 31, 32 and body ground.
It should be an open circuit.

Q: Is it open circuit?

YES : Erase the diagnostic trouble code from memory, and check the diagnostic trouble code. If DTC B1C27 sets, replace the SRS-ECU. (Refer to P.52B-440). Then go to Step 6.

NO : Go to Step 5.

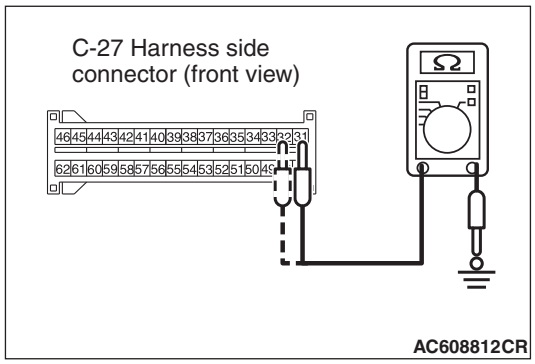

STEP 5. Check the harness wires for short circuit to ground between SRS-ECU connector C-27 (terminal No.31 and 32) and side-air bag module (LH) connector D-29 (terminal No.2 and 1).

Q: Is the check result normal?

YES : Go to Step 6.

NO : Repair the harness wires between SRS-ECU connector C-27 and side-air bag module (LH) connector D-29. Then go to Step 6.

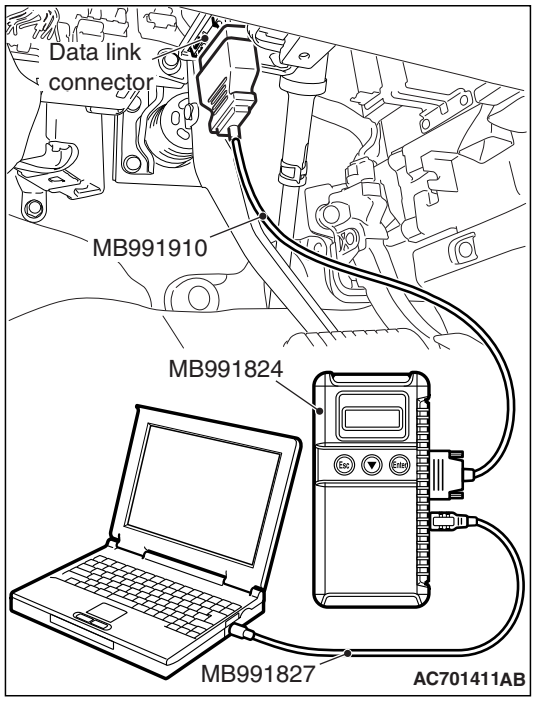

STEP 6. Recheck for diagnostic trouble code.

Check again if the DTC is set.

(1) Erase the DTC.

(2) Turn the ignition switch to the "ON" position.

(3) Check if the DTC is set.

(4) Turn the ignition switch to the "LOCK" (OFF) position.

Q: Is DTC B1C27 set?

YES : Return to Step 1.

NO : The procedure is complete.

DTC B1C28: Side-air bag Module (LH) (Squib) System (Shorted to Squib Circuit Power Supply)

Side-Airbag Module (Squib) (LH) Circuit

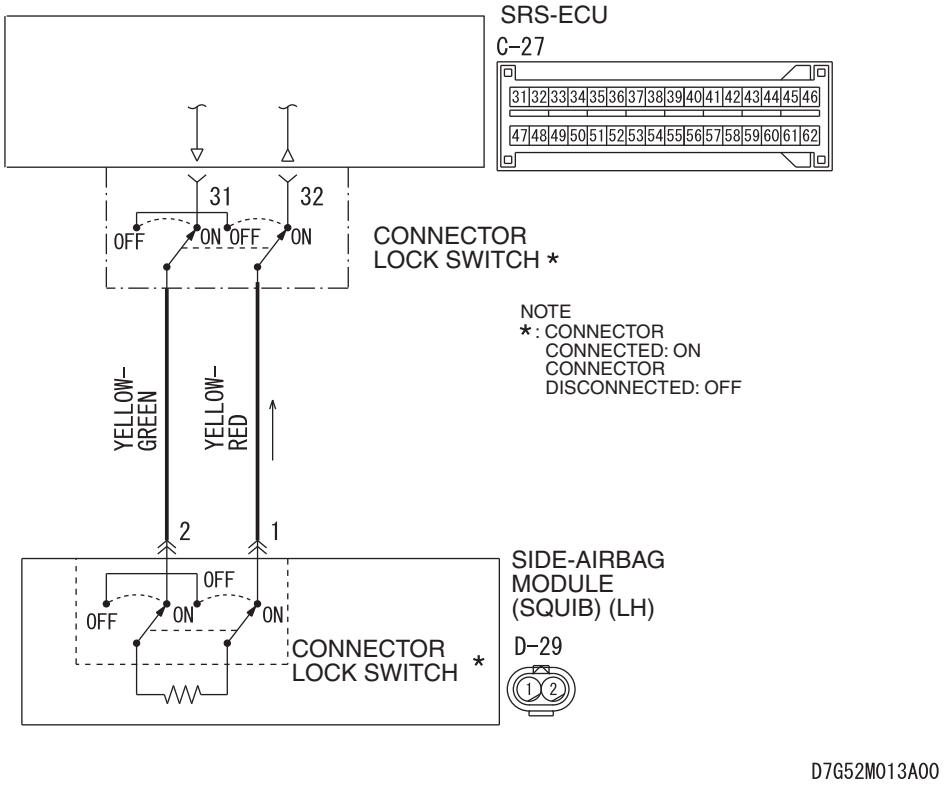

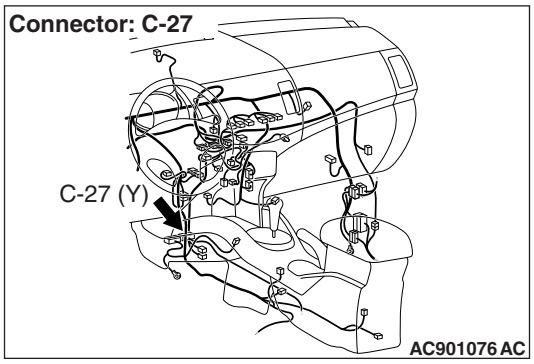

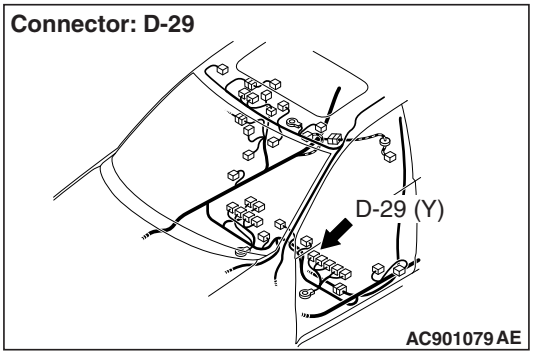

⚠ CAUTION

If DTC B1C28 is set in the SRS-ECU, always diagnose the CAN bus lines.

CIRCUIT OPERATION

- The SRS-ECU judges how severe a collision is by detecting signals from the side impact sensor installed on the lower side of the center pillar. If the impact is over a predetermined level, the SRS-ECU sends an ignition signal. At this time, if the side collision safing G-sensor is on, the SRS air bag will inflate.
- The ignition signal is input to the side-air bag module to inflate the side-air bag.

DTC SET CONDITIONS

This DTC is set if there is abnormal resistance between the input terminals of the side-air bag module (LH) (squib).

TROUBLESHOOTING HINTS

- Damaged wiring harnesses or connectors
- Short to the power supply in the side-air bag module (LH) (squib) harness
- Malfunction of the SRS-ECU

DIAGNOSIS

Required Special Tools:

- MB991958: Scan Tool (M.U.T.-III Sub Assembly)
  - MB991824: Vehicle Communication Interface (V.C.I.)
  - MB991827: M.U.T.-III USB Cable
  - MB991910: M.U.T.-III Main Harness A (Vehicles with CAN communication system)
- MB991865: Dummy resistor
- MB991866: Resister harness

STEP 1. Using scan tool MB991958, diagnose the CAN bus line.

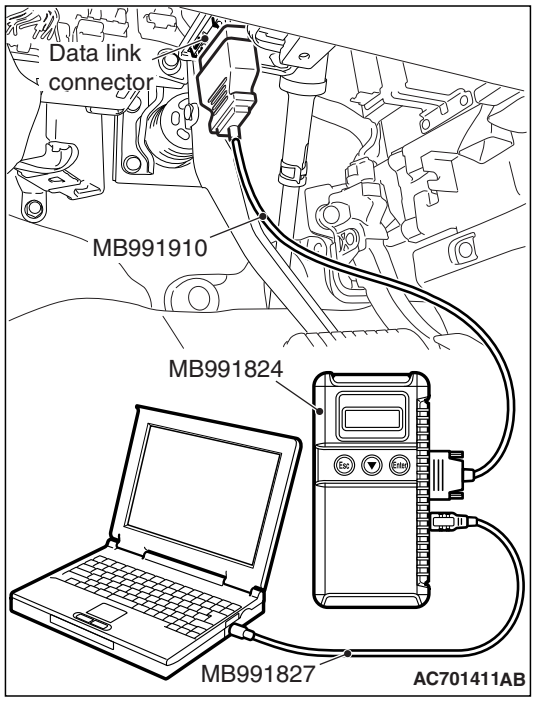

⚠ CAUTION

To prevent damage to scan tool MB991958, always turn the ignition switch to the "LOCK" (OFF) position before connecting or disconnecting scan tool MB991958.

(1) Connect scan tool MB991958. Refer to "How to connect the scan tool P.52B-28."
(2) Turn the ignition switch to "ON" position.
(3) Diagnose the CAN bus line.
(4) Turn the ignition switch to the "LOCK" (OFF) position.

Q: Is the check result satisfactory?

YES : Go to Step 2.
NO : Repair the CAN bus line (Refer to GROUP 54C, Diagnosis P.54C-17).

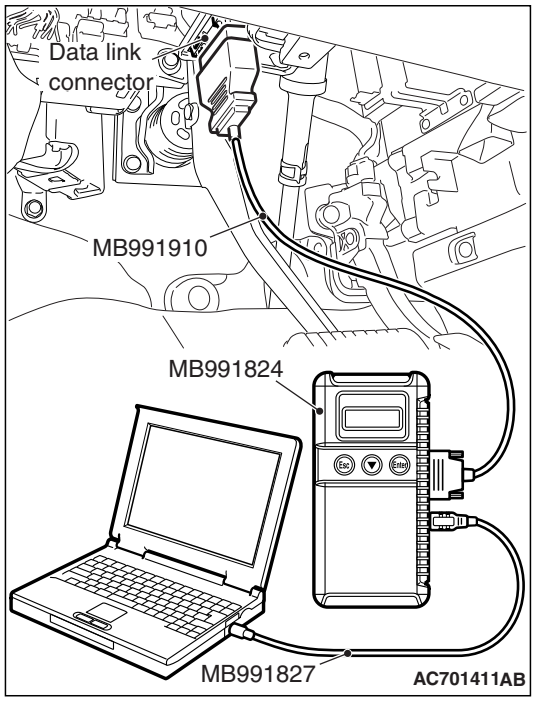

STEP 2. Recheck for diagnostic trouble code.

Check again if the DTC is set.

(1) Erase the DTC.
(2) Turn the ignition switch to "ON" position.
(3) Check if the DTC is set.
(4) Turn the ignition switch to the "LOCK" (OFF) position.

Q: Is the DTC set?

YES : Go to Step 3.

NO : There is an intermittent malfunction such as poor engaged connector(s) or open circuit (Refer to GROUP 00, How to Cope with Intermittent Malfunction P.00-15).

STEP 3. Check the side-air bag module (LH). (Using scan tool MB991958, read the diagnostic trouble code.)

(1) Disconnect the negative battery terminal.
(2) Disconnect the D-29 side-airbag module connector, unlock the connector by sliding the locking button to the direction of the arrow as shown in the figure, and then disconnect the connector.

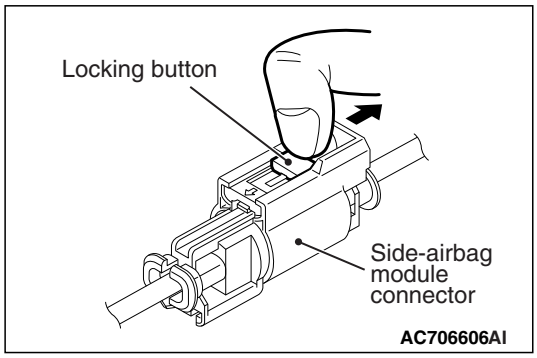

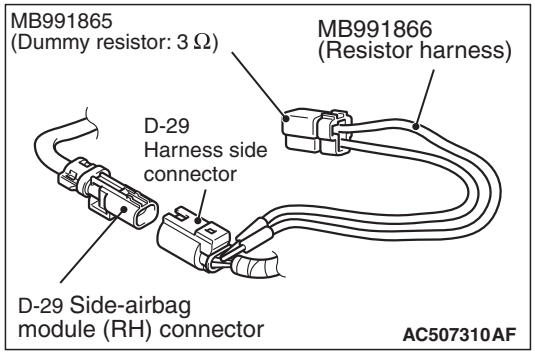

(3) Connect special tool MB991865 to special tool MB991866.

⚠ CAUTION

Do not insert a test probe into the terminal from its front side directly, as the connector contact pressure may be weakened.

(4) Insert special tool MB991866 into the D-29 harness side connector by backprobing.
(5) Connect the negative battery terminal.
(6) Erase the diagnostic trouble code memory, and check the diagnostic trouble code.

Q: Is DTC B1C28 set?

YES : Go to Step 4.

NO : Replace the seatback assembly (Refer to GROUP 52A, Front Seat Assembly P.52A-19). Then go to Step 6.

STEP 4. Check the side-air bag module (LH) circuit. Measure the voltage at the SRS-ECU connector C-27.

(1) Disconnect the negative battery terminal.

(2) While pushing the part "A" indicated in the figure of the harness side connector, turn the lock lever to the direction of the arrow to release the lock lever, and disconnect the C-27 SRS-ECU connector.

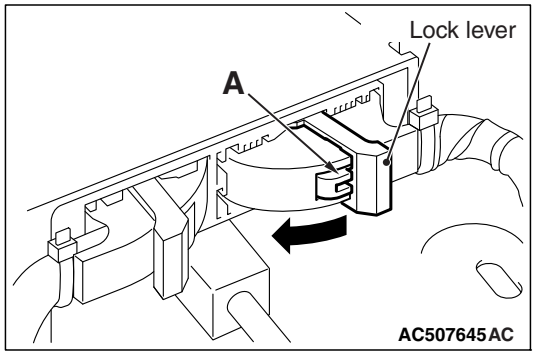

⚠ DANGER

To prevent the air bag from deploying unintentionally, disconnect the side-airbag module (LH) connector D-29 to short the squib circuit.

(3) Disconnect the D-29 side-airbag module connector, unlock the connector by sliding the locking button to the direction of the arrow as shown in the figure, and then disconnect the connector.

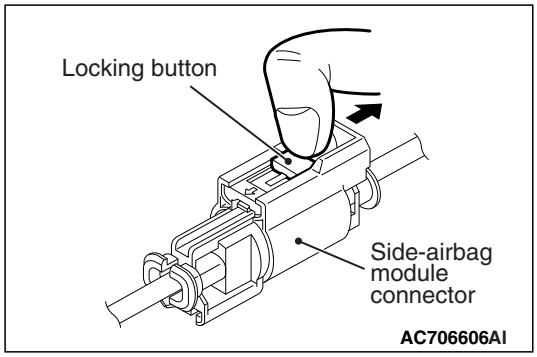

⚠ CAUTION

Insert an insulator such as a cable tie to a depth of 4mm (0.16 inch) or more, otherwise the short spring will not be released.

(4) Insert a cable tie [3 mm (0.12 inch) wide, 0.5 mm (0.02 inch) thick] between terminals 31, 32 and the short spring to release the short spring.

(5) Connect the negative battery terminal.

(6) Ignition switch: "ON".

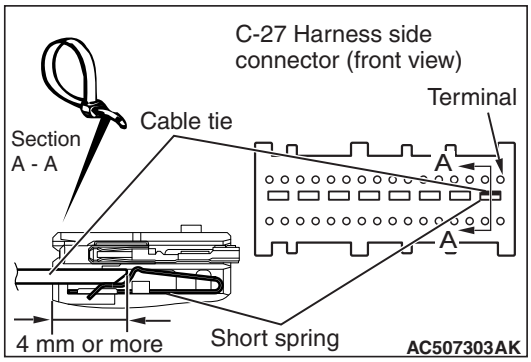

(7) Measure the voltage between C-27 harness side connector terminals 31, 32 and body ground.
Voltage should measure 1 volt or less.

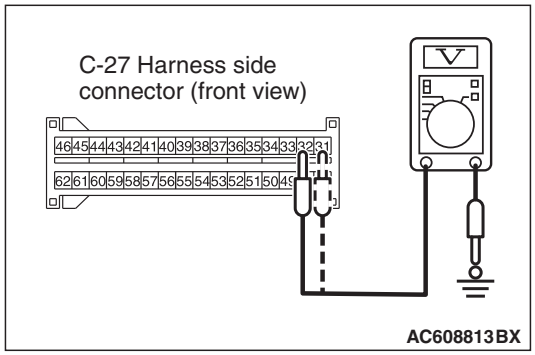

Q: Is the measured voltage within the specified range?

YES : Erase the diagnostic trouble code memory, and check the diagnostic trouble code. If DTC B1C28 sets, replace the SRS-ECU. (Refer to P.52B-440). Then go to Step 6.

NO : Go to Step 5.

STEP 5. Check the harness wires for short circuit to power supply between SRS-ECU connector C-27 (terminal No.31 and 32 and side-air bag module (LH) connector D-29 (terminal No.2 and 1).

Q: Is the check result normal?

YES : Go to Step 6.

NO : Repair the harness wires between SRS-ECU connector C-27 and side-air bag module (LH) connector D-29. Then go to Step 6.

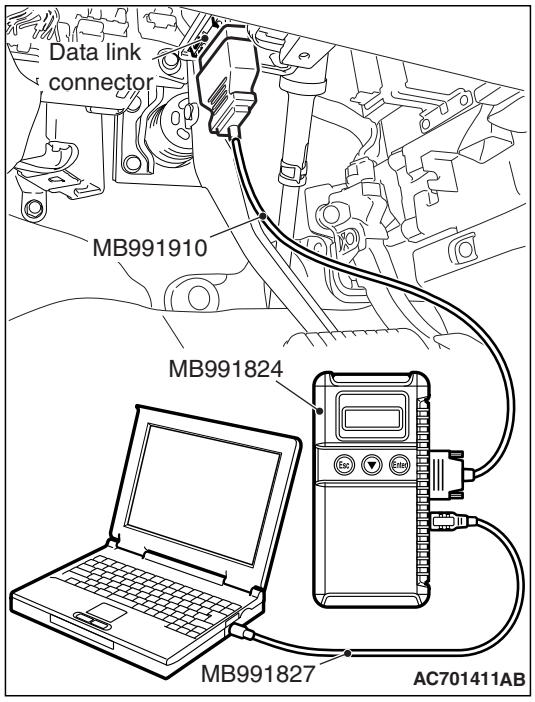

STEP 6. Recheck for diagnostic trouble code.

Check again if the DTC is set.

(1) Erase the DTC.

(2) Turn the ignition switch to the "ON" position.

(3) Check if the DTC is set.

(4) Turn the ignition switch to the "LOCK" (OFF) position.

Q: Is DTC B1C28 set?

YES : Return to Step 1.

NO : The procedure is complete.

DTC B1C29: Side-air bag Module (LH) (Squib) System (Squib Circuit Open)

Side-Airbag Module (Squib) (LH) Circuit

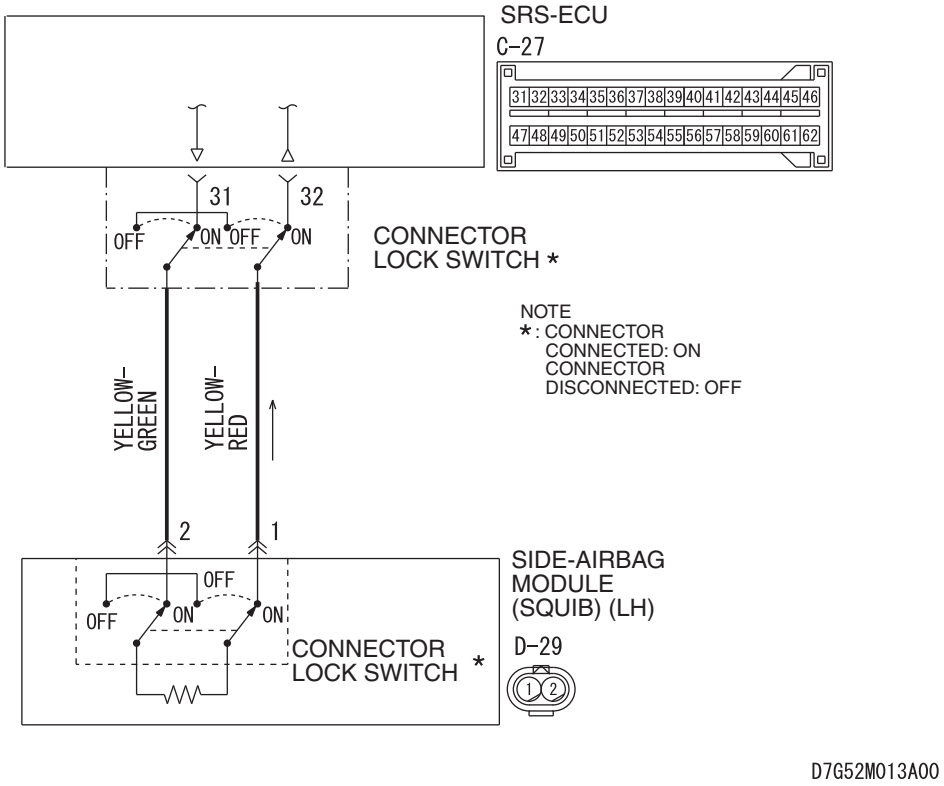

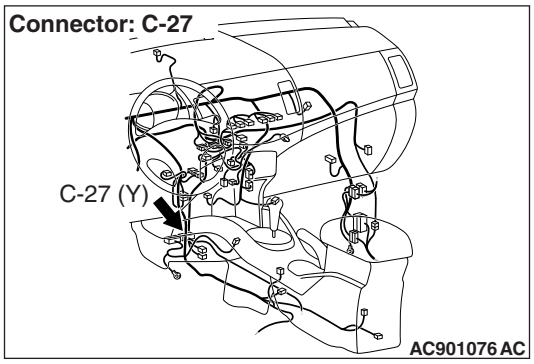

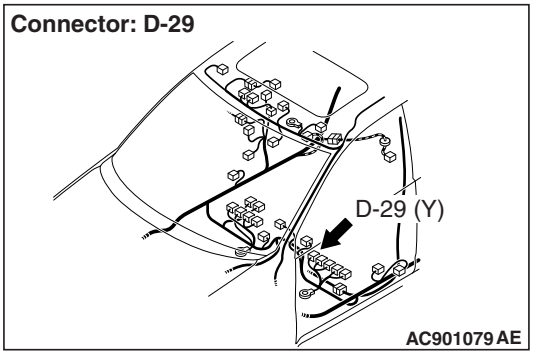

⚠ CAUTION

If DTC B1C29 is set in the SRS-ECU, always diagnose the CAN bus lines.

CIRCUIT OPERATION

- The SRS-ECU judges how severe a collision is by detecting signals from the side impact sensor installed on the lower side of the center pillar. If the impact is over a predetermined level, the SRS-ECU sends an ignition signal. At this time, if the side collision safing G-sensor is on, the SRS air bag will inflate.
- The ignition signal is input to the side-air bag module to inflate the side-air bag.

DTC SET CONDITIONS

This DTC is set if there is abnormal resistance between the input terminals of the side-air bag module (LH) (squib).

TROUBLESHOOTING HINTS

- Open circuit in the side-air bag module (squib) (LH) circuit
- Improper connector contact
- Malfunction of the SRS-ECU

DIAGNOSIS

Required Special Tools:

- MB991958: Scan Tool (M.U.T.-III Sub Assembly)
  - MB991824: Vehicle Communication Interface (V.C.I.)
  - MB991827: M.U.T.-III USB Cable
  - MB991910: M.U.T.-III Main Harness A (Vehicles with CAN communication system)
- MB991865: Dummy resistor
- MB991866: Resister harness

STEP 1. Using scan tool MB991958, diagnose the CAN bus line.

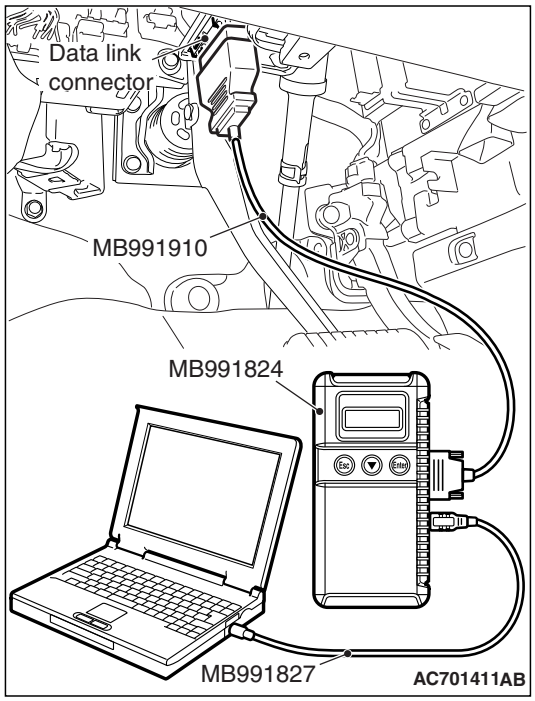

⚠ CAUTION

To prevent damage to scan tool MB991958, always turn the ignition switch to the "LOCK" (OFF) position before connecting or disconnecting scan tool MB991958.

(1) Connect scan tool MB991958. Refer to "How to connect the scan tool P.52B-28."
(2) Turn the ignition switch to "ON" position.
(3) Diagnose the CAN bus line.
(4) Turn the ignition switch to the "LOCK" (OFF) position.

Q: Is the check result satisfactory?

YES : Go to Step 2.
NO : Repair the CAN bus line (Refer to GROUP 54C, Diagnosis P.54C-17).

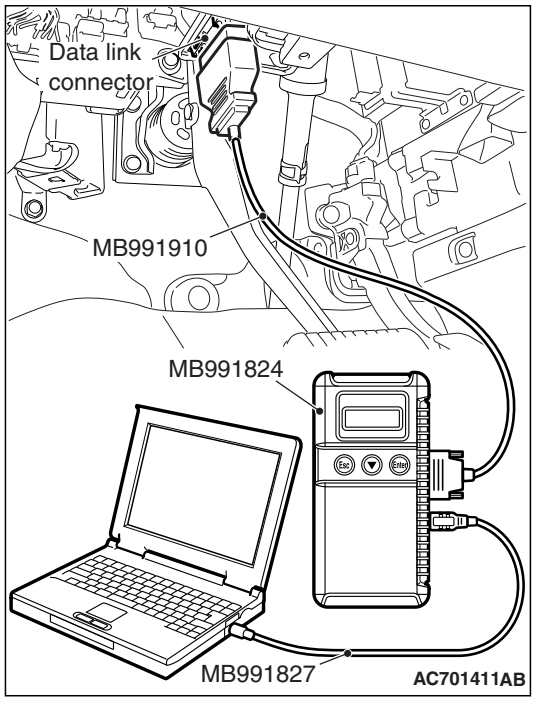

STEP 2. Recheck for diagnostic trouble code.

Check again if the DTC is set.

(1) Erase the DTC.
(2) Turn the ignition switch to "ON" position.
(3) Check if the DTC is set.
(4) Turn the ignition switch to the "LOCK" (OFF) position.

Q: Is the DTC set?

YES : Go to Step 3.

NO : There is an intermittent malfunction such as poor engaged connector(s) or open circuit (Refer to GROUP 00, How to Cope with Intermittent Malfunction P.00-15).

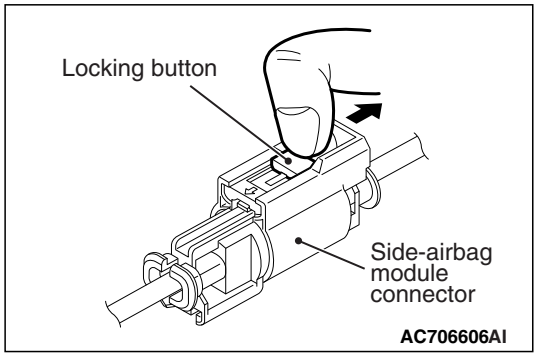

STEP 3. Check the side-air bag module (LH). (Using scan tool MB991958, read the diagnostic trouble code.)

(1) Disconnect the negative battery terminal.
(2) Disconnect the D-29 side-airbag module connector, unlock the connector by sliding the locking button to the direction of the arrow as shown in the figure, and then disconnect the connector.

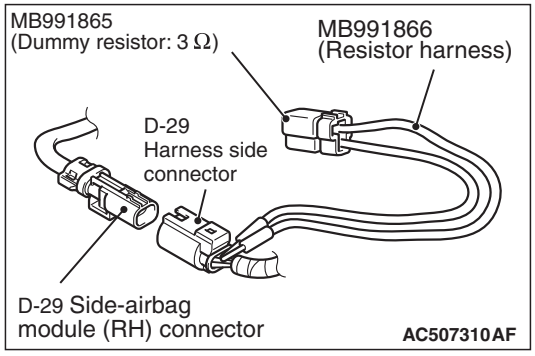

(3) Connect special tool MB991865 to special tool MB991866.

⚠ CAUTION

Do not insert a test probe into the terminal from its front side directly, as the connector contact pressure may be weakened.

(4) Insert special tool MB991866 into the D-29 harness side connector by backprobing.
(5) Connect the negative battery terminal.
(6) Erase diagnostic trouble code memory, and then check the diagnostic trouble code.

Q: Is DTC B1C29 set?

YES : Go to Step 4.

NO : Replace the seatback assembly (Refer to GROUP 52A, Front Seat Assembly P.52A-19). Then go to Step 5.

STEP 4. Check the harness for open circuit between the SRS-ECU connector C-27 (terminal No.31 and 32) and the side-air bag module (LH) connector D-29 (terminal No.2 and 1).

(1) Disconnect the negative battery terminal.

(2) While pushing the part "A" indicated in the figure of the harness side connector, turn the lock lever to the direction of the arrow to release the lock lever, and disconnect the C-27 SRS-ECU connector.

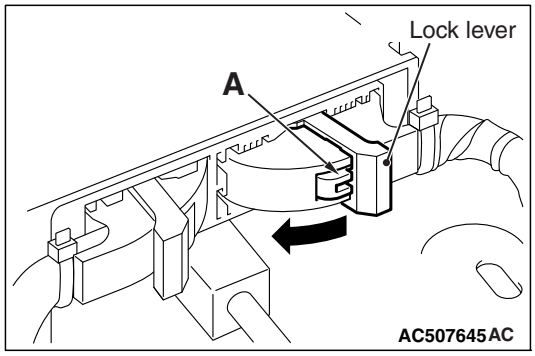

⚠ ***DANGER***

To prevent the air bag from deploying unintentionally, disconnect the side-airbag module (LH) connector D-29 to short the squib circuit.

(3) Disconnect the D-29 side-airbag module connector, unlock the connector by sliding the locking button to the direction of the arrow as shown in the figure, and then disconnect the connector.

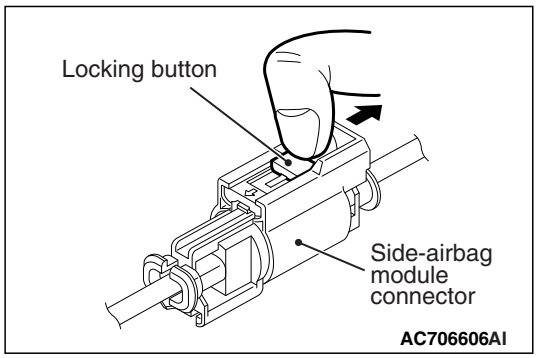

⚠ **CAUTION**

Insert an insulator such as a cable tie to a depth of 4mm (0.16 inch) or more, otherwise the short spring will not be released.

(4) Insert a cable tie [3 mm (0.12 inch) wide, 0.5 mm (0.02 inch) thick] between terminals 31, 32 and the short spring to release the short spring.

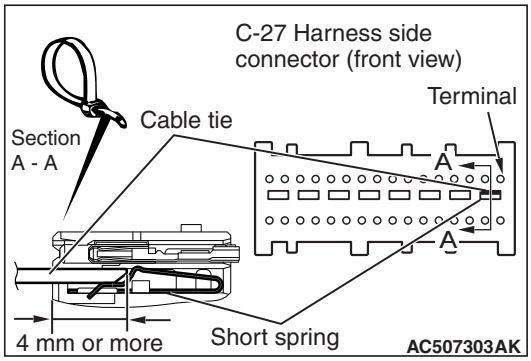

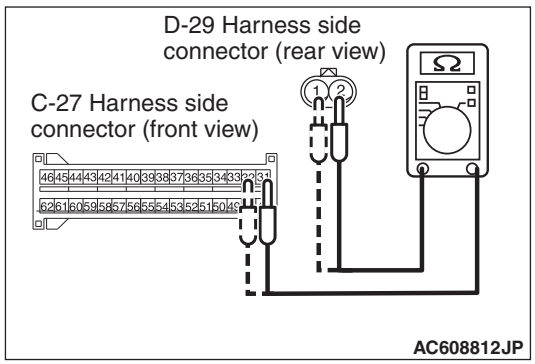

⚠ CAUTION

Do not insert a test probe into the terminal from D-29 harness side connector front side directly, as the connector contact pressure may be weakened.

(5) Check for continuity between the following terminals. It should be less than 2 ohms.
- SRS-ECU connector C-27 (terminal No.31) and the side-air bag module (LH) connector D-29 (terminal No.2)
- SRS-ECU connector C-27 (terminal No.32) and the side-air bag module (LH) connector D-29 (terminal No.1)

Q: Does continuity exist?

YES : Erase the diagnostic trouble code memory, and check the diagnostic trouble code. If DTC B1C29 sets, replace the SRS-ECU. (Refer to P.52B-440). Then go to Step 5.

NO : Repair the harness wires between SRS-ECU connector C-27 and side-air bag module (LH) connector D-29. Then go to Step 5.

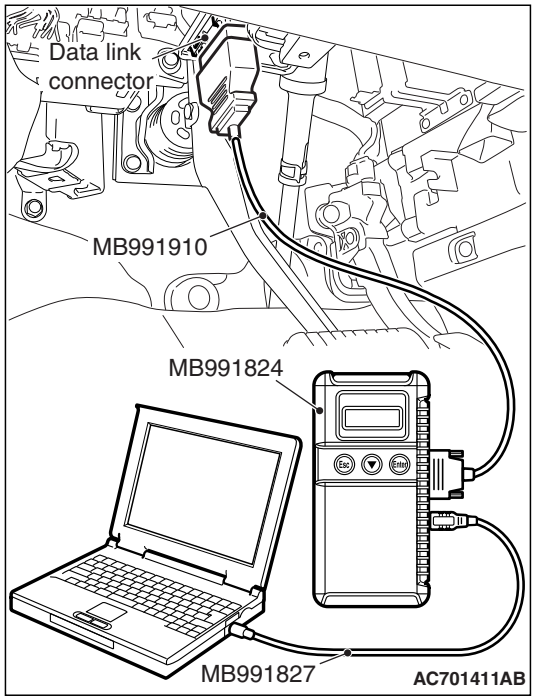

STEP 5.Recheck for diagnostic trouble code.

Check again if the DTC is set.

(1) Erase the DTC.
(2) Turn the ignition switch to the "ON" position.
(3) Check if the DTC is set.
(4) Turn the ignition switch to the "LOCK" (OFF) position.

Q: Is DTC B1C29 set?

YES : Return to Step 1.

NO : The procedure is complete.

DTC B1C2A: Side-air bag Module (LH) (Squib) System (Short Circuit between Squib Circuit Terminals)

Side-Airbag Module (Squib) (LH) Circuit

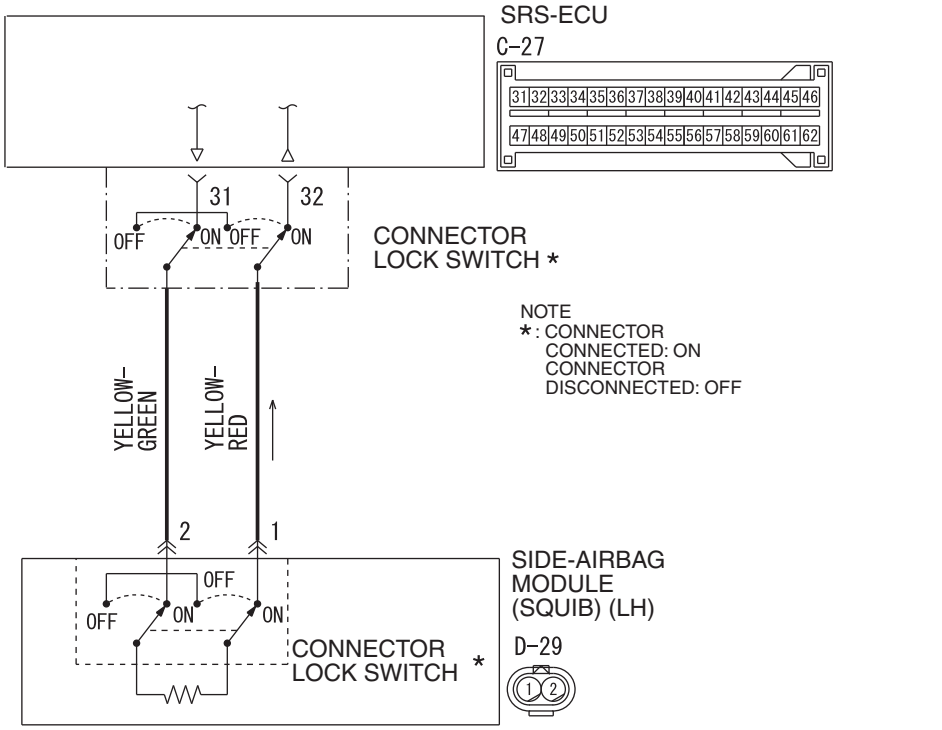

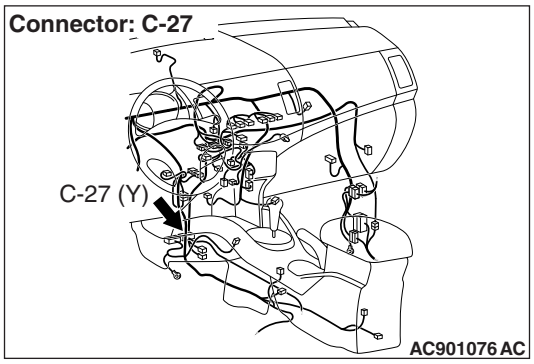

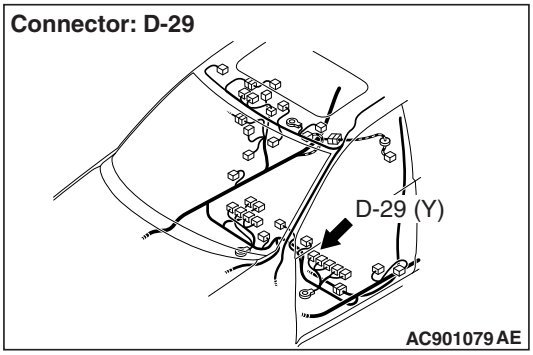

⚠ CAUTION

If DTC B1C2A is set in the SRS-ECU, always diagnose the CAN bus lines.

CIRCUIT OPERATION

- The SRS-ECU judges how severe a collision is by detecting signals from the side impact sensor installed on the lower side of the center pillar. If the impact is over a predetermined level, the SRS-ECU sends an ignition signal. At this time, if the side collision safing G-sensor is on, the SRS air bag will inflate.
- The ignition signal is input to the side-air bag module to inflate the side-air bag.

DTC SET CONDITIONS

This DTC is set if there is abnormal resistance between the input terminals of the side-air bag module (LH) (squib).

TROUBLESHOOTING HINTS

- Improper engaged connector or defective short spring*
- Short circuit between the side-air bag module (LH) (squib) circuit terminals
- Damaged connector(s)
- Malfunction of the SRS-ECU

*NOTE: *: The squib circuit connectors integrate a "short" spring (which prevents the air bag from deploying unintentionally due to static electricity by shorting the positive wire to the ground wire in the squib circuit when the connectors are disconnected). Therefore, if connector C-27 or D-29 is damaged or improperly engaged, the short spring may not be released when the connector is connected.*

DIAGNOSIS

Required Special Tools:

- MB991958: Scan Tool (M.U.T.-III Sub Assembly)
  - MB991824: Vehicle Communication Interface (V.C.I.)
  - MB991827: M.U.T.-III USB Cable
  - MB991910: M.U.T.-III Main Harness A (Vehicles with CAN communication system)
- MB991865: Dummy resistor
- MB991866: Resister harness

STEP 1. Using scan tool MB991958, diagnose the CAN bus line.

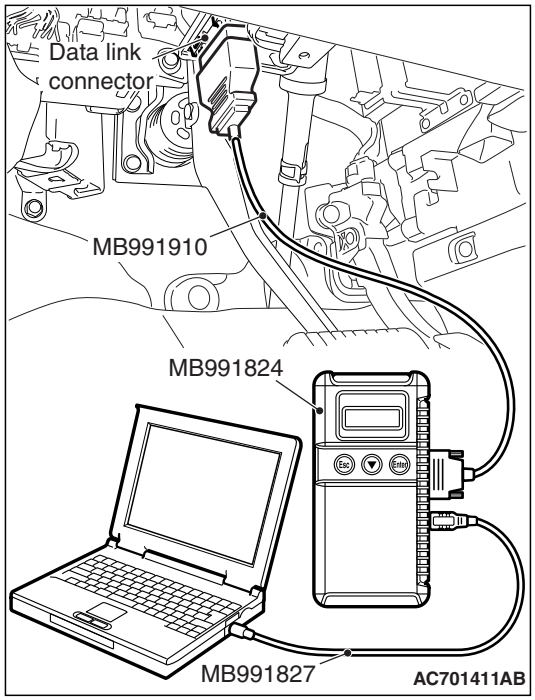

⚠ CAUTION

To prevent damage to scan tool MB991958, always turn the ignition switch to the "LOCK" (OFF) position before connecting or disconnecting scan tool MB991958.

(1) Connect scan tool MB991958. Refer to "How to connect the scan tool P.52B-28."
(2) Connect scan tool MB991958 to the data link connector.
(3) Turn the ignition switch to "ON" position.
(4) Diagnose the CAN bus line.

Q: Is the check result satisfactory?

YES : Go to Step 2.
NO : Repair the CAN bus line (Refer to GROUP 54C, Diagnosis P.54C-17).

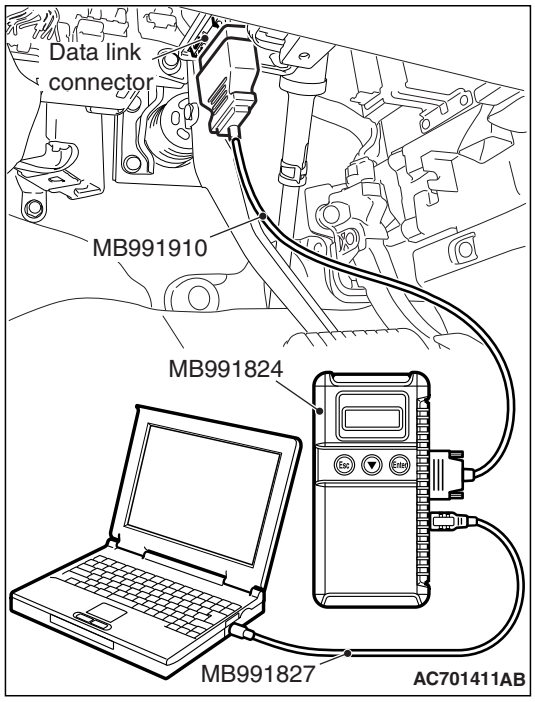

STEP 2. Recheck for diagnostic trouble code.

Check again if the DTC is set.

(1) Erase the DTC.
(2) Turn the ignition switch to "ON" position.
(3) Check if the DTC is set.
(4) Turn the ignition switch to the "LOCK" (OFF) position.

Q: Is the DTC set?

YES : Go to Step 3.

NO : There is an intermittent malfunction such as poor engaged connector(s) or open circuit (Refer to GROUP 00, How to Cope with Intermittent Malfunction P.00-15).

STEP 3. Check SRS-ECU connector C-27 and side-air bag module (LH) connector D-29. (Using scan tool MB991958, read the diagnostic trouble code.)

(1) Disconnect the negative battery terminal.
(2) While pressing the part A in the illustration of the C-27 SRS-ECU harness side connector, turn the lock lever toward the arrow direction to release the lock lever. Then, disconnect the connector and reconnect it.

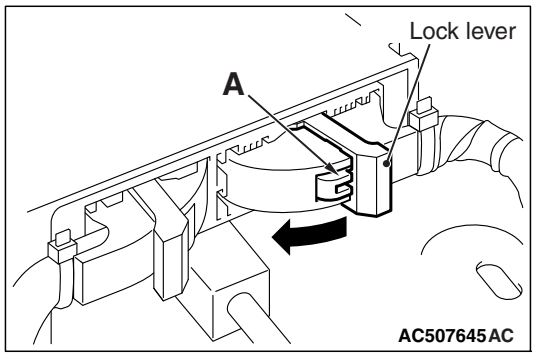

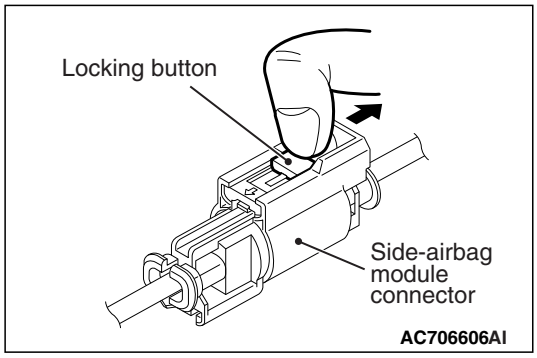

(3) Disconnect the D-29 side-airbag module connector, and then reconnect it. Unlock the connector by sliding the locking button to the direction of the arrow as shown in the figure, and then disconnect the connector.
(4) Connect the negative battery terminal.
(5) Erase the diagnostic trouble code memory, and check the diagnostic trouble code.

Q: Is DTC B1C2A out put?

YES : Go to Step 4.

NO : The procedure is complete. It is assumed that DTC B1C2A set because connector C-27 or D-29 was engaged improperly.

STEP 4. Check the side-air bag module (LH). (Using scan tool MB991958, read the diagnostic trouble code.)

(1) Disconnect the negative battery terminal.

(2) Disconnect the D-29 side-airbag module connector, unlock the connector by sliding the locking button to the direction of the arrow as shown in the figure, and then disconnect the connector.

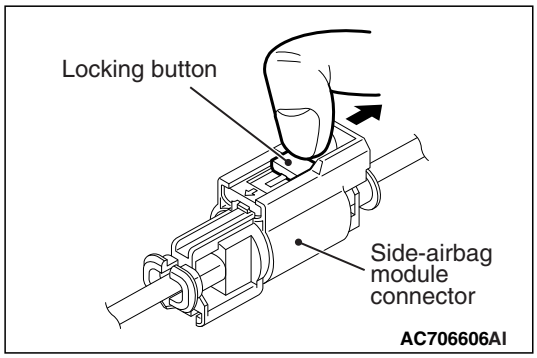

(3) Connect special tool MB991865 to special tool MB991866.

⚠ CAUTION

Do not insert a test probe into the terminal from its front side directly, as the connector contact pressure may be weakened.

(4) Insert special tool MB991866 into the D-29 harness side connector by backprobing.

(5) Connect the negative battery terminal.

(6) Erase diagnostic trouble code memory, and check the diagnostic trouble code.

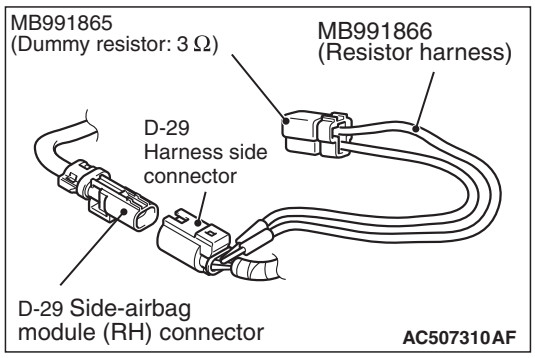

Q: Is DTC B1C2A set?

YES : Go to Step 5.

NO : Replace the seatback assembly (Refer to GROUP 52A, Front Seat Assembly P.52A-19). Then go to Step 7.

STEP 5. Check the side-air bag module (LH) circuit.
Measure the resistance at the SRS-ECU connector C-27.

(1) Disconnect the negative battery terminal.
(2) While pushing the part "A" indicated in the figure of the harness side connector, turn the lock lever to the direction of the arrow to release the lock lever, and disconnect the C-27 SRS-ECU connector.

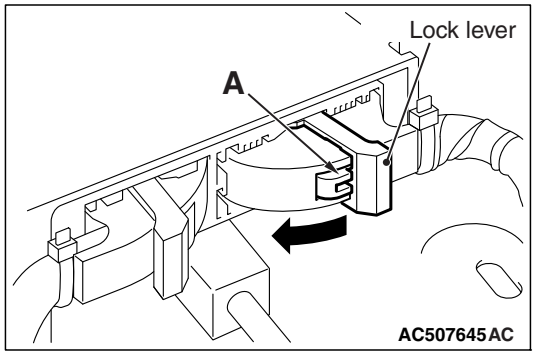

⚠ DANGER

To prevent the air bag from deploying unintentionally, disconnect the side-airbag module (LH) connector D-29 to short the squib circuit.

(3) Disconnect the D-29 side-airbag module connector, unlock the connector by sliding the locking button to the direction of the arrow as shown in the figure, and then disconnect the connector.

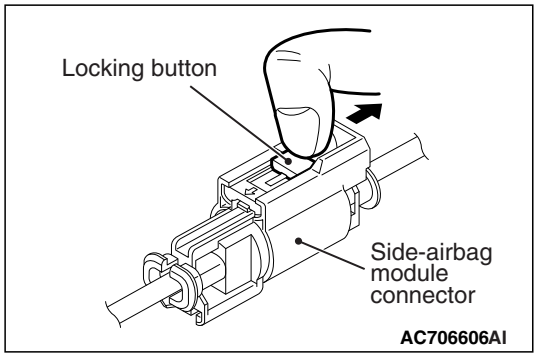

⚠ CAUTION

Insert an insulator such as a cable tie to a depth of 4mm (0.16 inch) or more, otherwise the short spring will not be released.

(4) Insert a cable tie [3 mm (0.12 inch) wide, 0.5 mm (0.02 inch) thick] between terminals 31, 32 and the short spring to release the short spring.

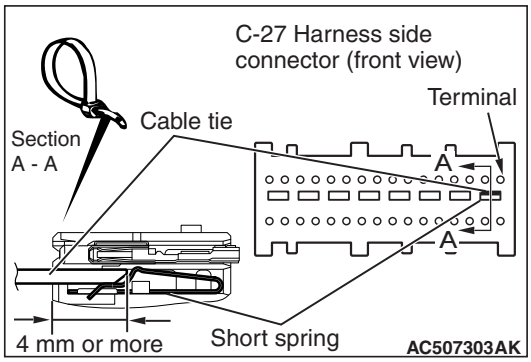

(5) Check for continuity between C-27 harness side connector terminals 31 and 32.
It should be an open circuit.

Q: Is it open circuit?

YES : Erase the diagnostic trouble code memory, and check the diagnostic trouble code. If DTC B1C2A sets, replace the SRS-ECU. (Refer to P.52B-440). Then go to Step 7.

NO : Go to Step 6.

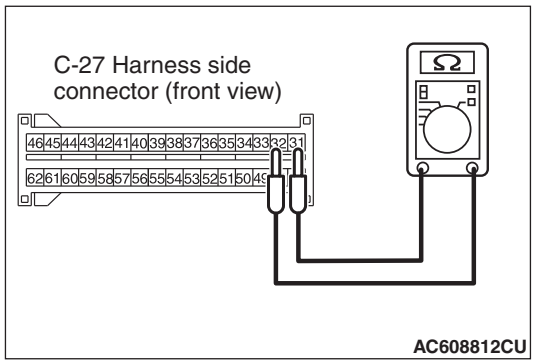

STEP 6. Check the harness wires for short circuit between SRS-ECU connector C-27 (terminal No.31 and 32) and side-air bag module (LH) connector D-29 (terminal No.2 and 1).

Q: Is the check result normal?

YES : Go to Step 7.

NO : Repair the harness wires between SRS-ECU connector C-27 and side-air bag module (LH) connector D-29. Then go to Step 7.

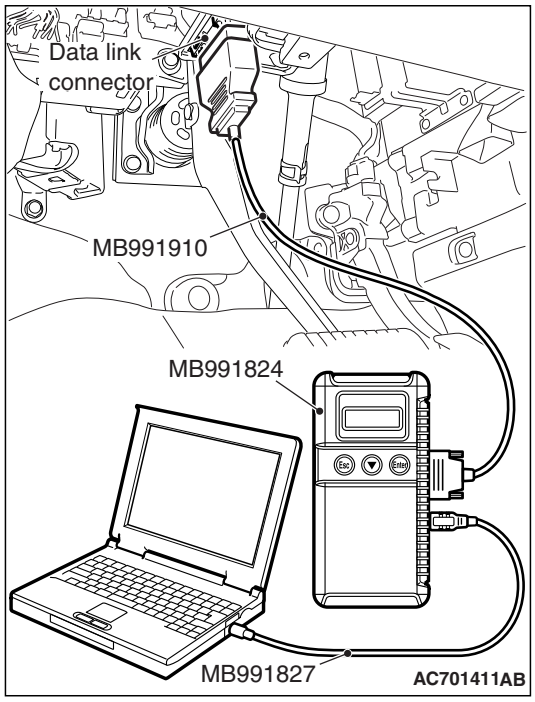

STEP 7. Recheck for diagnostic trouble code.

Check again if the DTC is set.

(1) Erase the DTC.

(2) Turn the ignition switch to the "ON" position.

(3) Check if the DTC is set.

(4) Turn the ignition switch to the "LOCK" (OFF) position.

Q: Is DTC B1C2A set?

YES : Return to Step 1.

NO : The procedure is complete.

DTC B1C2B: Side-air bag Module (RH) (Squib) System (Shorted to Squib Circuit Ground)

Side-Airbag Module (Squib) (RH) Circuit

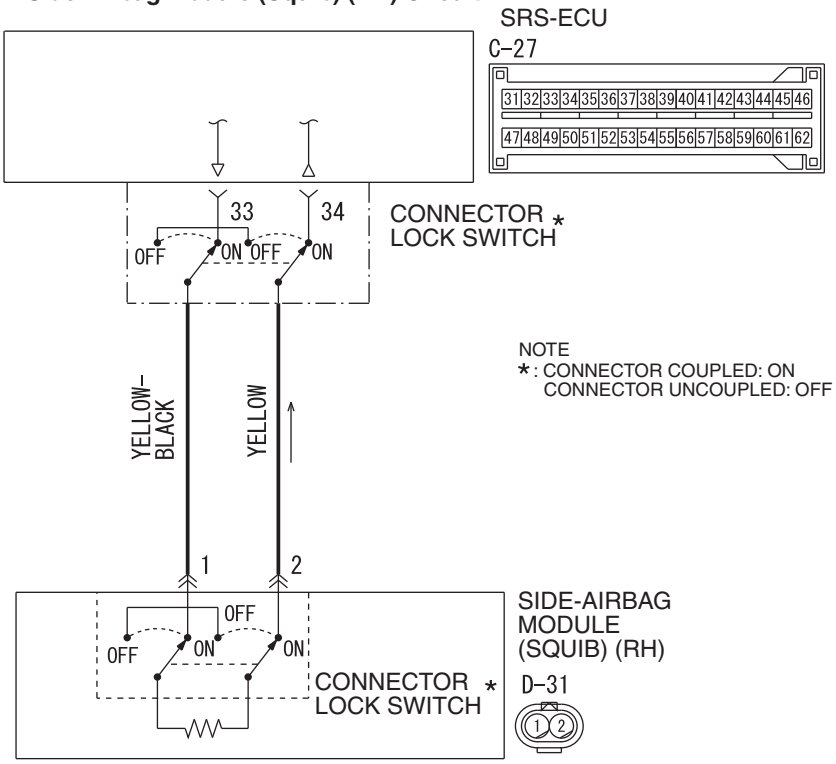

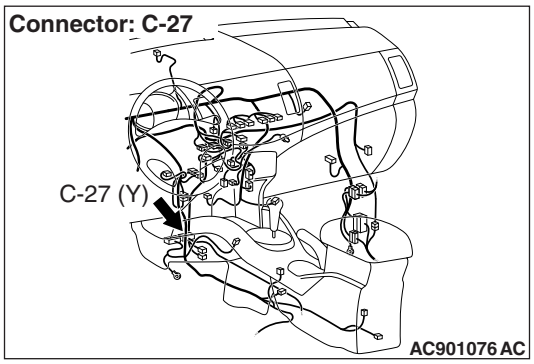

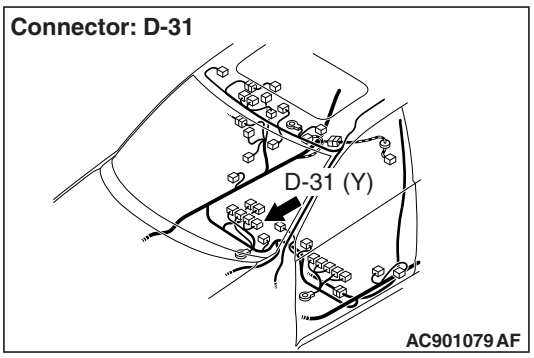

⚠ CAUTION

If DTC B1C2B is set in the SRS-ECU, always diagnose the CAN bus lines.

CIRCUIT OPERATION

- The SRS-ECU judges how severe a collision is by detecting signals from the side impact sensor installed on the lower side of the center pillar. If the impact is over a predetermined level, the SRS-ECU sends an ignition signal. At this time, if the side collision safing G-sensor is on, the SRS air bag will inflate.
- The ignition signal is input to the side-air bag module to inflate the side-air bag.

DTC SET CONDITIONS

This DTC is set if there is abnormal resistance between the input terminals of the side-air bag module (RH) (squib).

TROUBLESHOOTING HINTS

- Damaged wiring harnesses or connectors
- Short to ground in the side-air bag module (RH) (squib) harness
- Malfunction of the SRS-ECU

TSB Revision

DIAGNOSIS

Required Special Tools:

- MB991958: Scan Tool (M.U.T.-III Sub Assembly)
  - MB991824: Vehicle Communication Interface (V.C.I.)
  - MB991827: M.U.T.-III USB Cable
  - MB991910: M.U.T.-III Main Harness A (Vehicles with CAN Communication System)
- MB991865: Dummy resistor
- MB991866: Resister harness

STEP 1. Using scan tool MB991958, diagnose the CAN bus line.

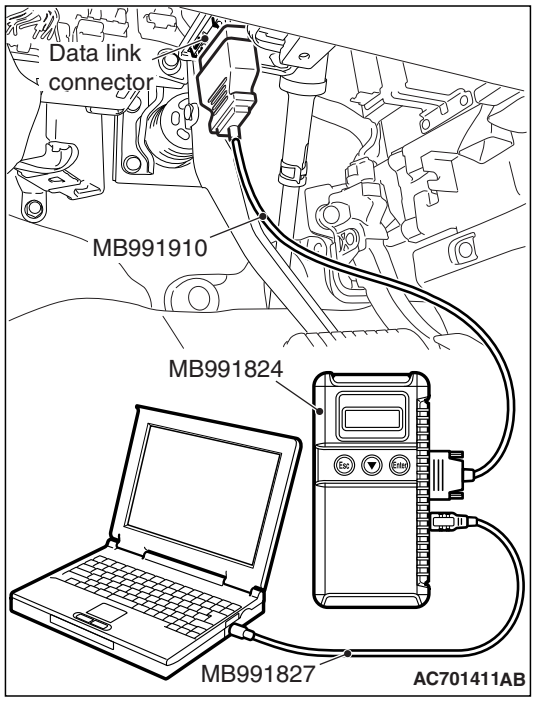

⚠ CAUTION

To prevent damage to scan tool MB991958, always turn the ignition switch to the "LOCK" (OFF) position before connecting or disconnecting scan tool MB991958.

(1) Connect scan tool MB991958. Refer to "How to connect the scan tool P.52B-28."
(2) Turn the ignition switch to "ON" position.
(3) Diagnose the CAN bus line.
(4) Turn the ignition switch to the "LOCK" (OFF) position.

Q: Is the check result satisfactory?

YES : Go to Step 2.
NO : Repair the CAN bus line (Refer to GROUP 54C, Diagnosis P.54C-17).

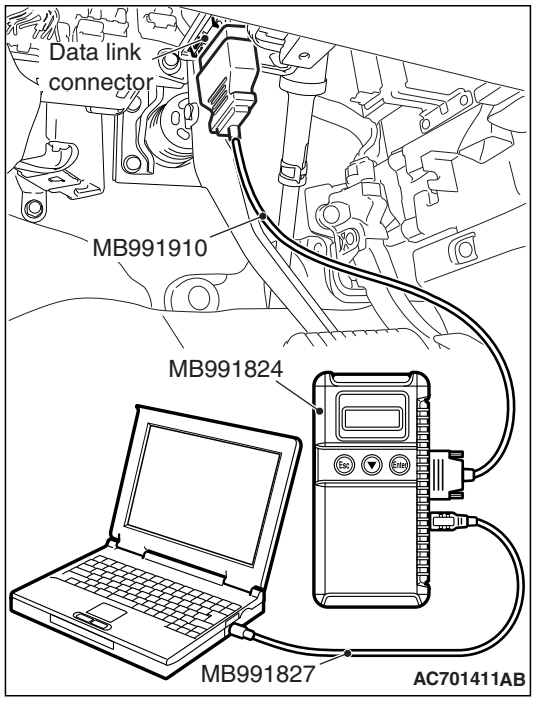

STEP 2. Recheck for diagnostic trouble code.

Check again if the DTC is set.

(1) Erase the DTC.
(2) Turn the ignition switch to "ON" position.
(3) Check if the DTC is set.
(4) Turn the ignition switch to the "LOCK" (OFF) position.

Q: Is the DTC set?

YES : Go to Step 3.

NO : There is an intermittent malfunction such as poor engaged connector(s) or open circuit (Refer to GROUP 00, How to Cope with Intermittent Malfunction P.00-15).

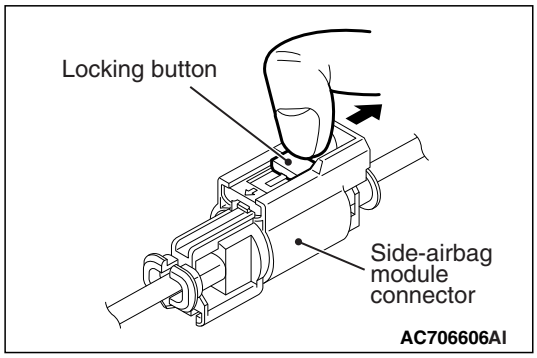

STEP 3. Check the side-air bag module (RH). (Using scan tool MB991958, read the diagnostic trouble code.)

(1) Disconnect the negative battery terminal.
(2) Disconnect the D-31 side-airbag module connector, unlock the connector by sliding the locking button to the direction of the arrow as shown in the figure, and then disconnect the connector.

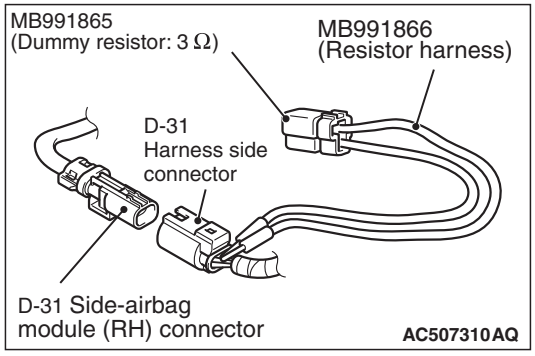

(3) Connect special tool MB991865 to special tool MB991866.

⚠ CAUTION

Do not insert a test probe into the terminal from its front side directly, as the connector contact pressure may be weakened.

(4) Insert special tool MB991866 into the D-31 harness side connector by backprobing.
(5) Connect the negative battery terminal.
(6) Erase the diagnostic trouble code memory, and check the diagnostic trouble code.

Q: Is DTC B1C2B set?

YES : Go to Step 4.

NO : Replace the seatback assembly (Refer to GROUP 52A, Front Seat Assembly P.52A-19). Then go to Step 6.

STEP 4. Check the side-air bag module (RH) circuit.
Measure the resistance at the SRS-ECU connector C-27.

(1) Disconnect the negative battery terminal.
(2) While pushing the part "A" indicated in the figure of the harness side connector, turn the lock lever to the direction of the arrow to release the lock lever, and disconnect the C-27 SRS-ECU connector.

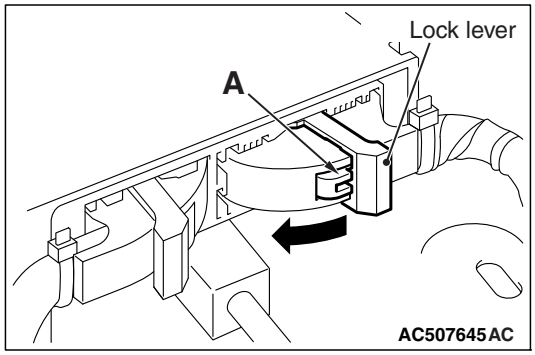

⚠ DANGER

To prevent the air bag from deploying unintentionally, disconnect the side-airbag module (RH) connector D-31 to short the squib circuit.

(3) Disconnect the D-31 side-airbag module connector, unlock the connector by sliding the locking button to the direction of the arrow as shown in the figure, and then disconnect the connector.

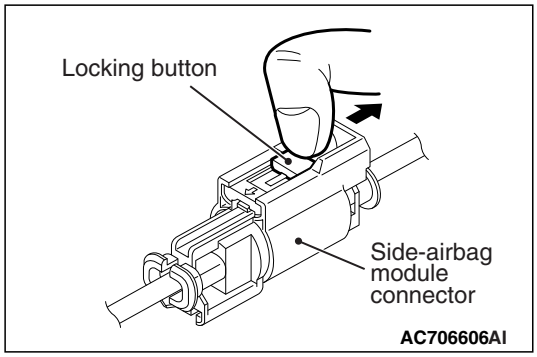

⚠ CAUTION

Insert an insulator such as a cable tie to a depth of 4mm (0.16 inch) or more, otherwise the short spring will not be released.

(4) Insert a cable tie [3 mm (0.12 inch) wide, 0.5 mm (0.02 inch) thick] between terminals 33, 34 and the short spring to release the short spring.

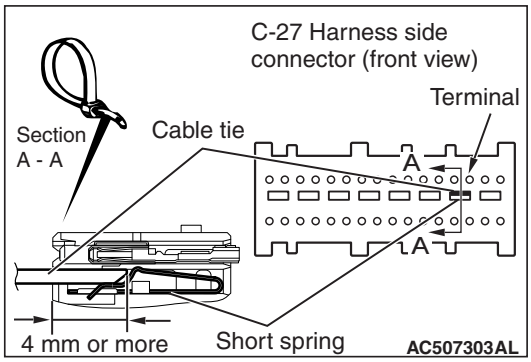

(5) Check for continuity between C-27 harness side connector terminals 33, 34 and body ground.
It should be an open circuit.

Q: Is it open circuit?

YES : Erase the diagnostic trouble code memory, and check the diagnostic trouble code. If DTC B1C2B sets, replace the SRS-ECU. (Refer to P.52B-440). Then go to Step 6.

NO : Go to Step 5.

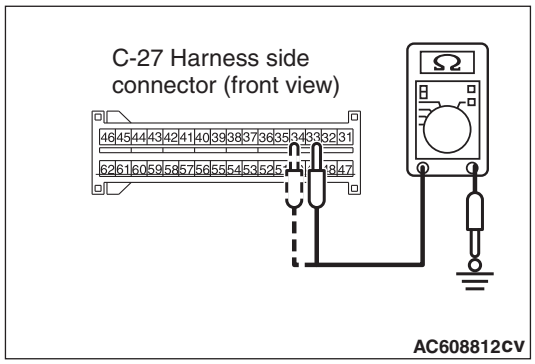

STEP 5. Check the harness wires for short circuit to ground between SRS-ECU connector C-27 (terminal No.33 and 34) and side-air bag module (RH) connector D-31 (terminal No.1 and 2).

Q: Is the check result normal?

YES : Go to Step 6.

NO : Repair the harness wires between SRS-ECU connector C-27 and side-air bag module (RH) connector D-31. Then go to Step 6.

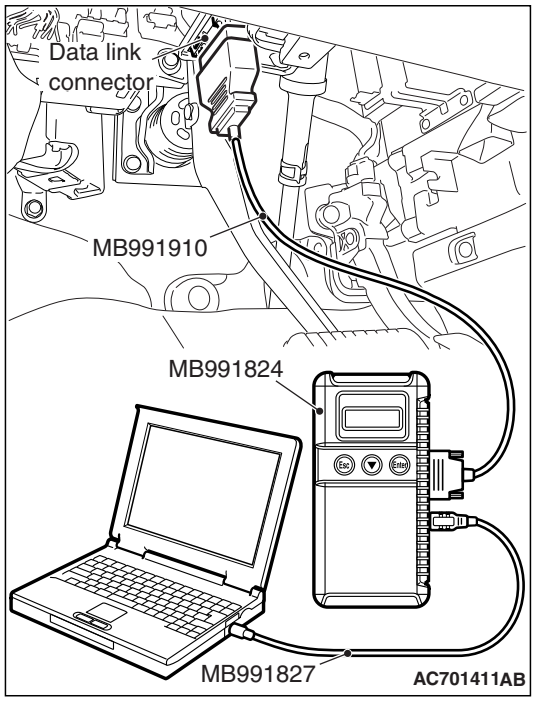

STEP 6. Recheck for diagnostic trouble code.

Check again if the DTC is set.

(1) Erase the DTC.

(2) Turn the ignition switch to the "ON" position.

(3) Check if the DTC is set.

(4) Turn the ignition switch to the "LOCK" (OFF) position.

Q: Is DTC B1C2B set?

YES : Return to Step 1.

NO : The procedure is complete.

DTC B1C2C: Side-air bag Module (RH) (Squib) System (Shorted to Squib Circuit Power Supply)

Side-Airbag Module (Squib) (RH) Circuit

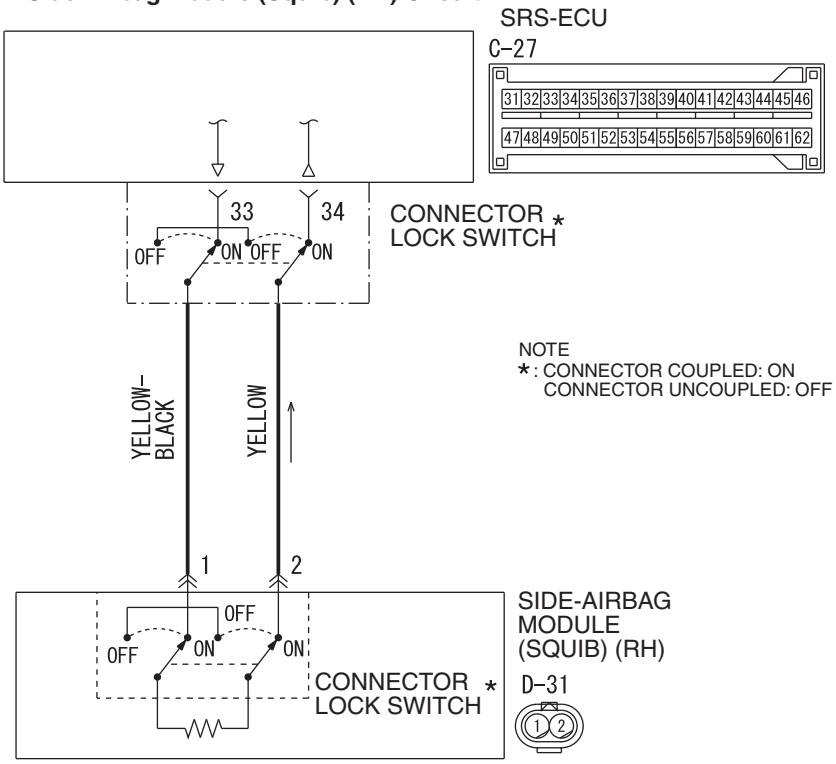

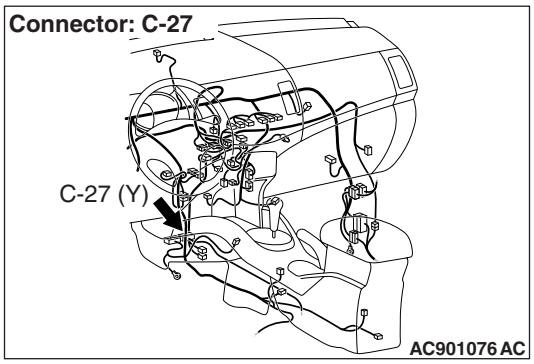

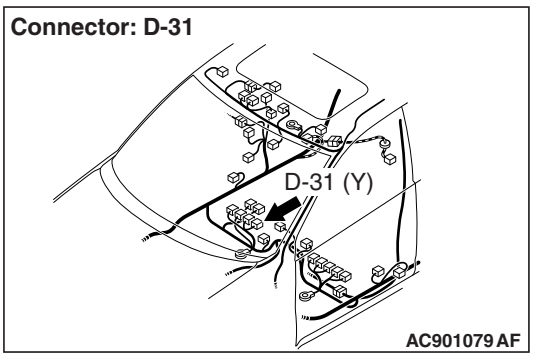

⚠ CAUTION

If DTC B1C2C is set in the SRS-ECU, always diagnose the CAN bus lines.

CIRCUIT OPERATION

- The SRS-ECU judges how severe a collision is by detecting signals from the side impact sensor installed on the lower side of the center pillar. If the impact is over a predetermined level, the SRS-ECU sends an ignition signal. At this time, if the side collision safing G-sensor is on, the SRS air bag will inflate.
- The ignition signal is input to the side-air bag module to inflate the side-air bag.

DTC SET CONDITIONS

This DTC is set if there is abnormal resistance between the input terminals of the side-air bag module (RH) (squib).

TROUBLESHOOTING HINTS

- Damaged wiring harnesses or connectors
- Short to the power supply in the side-air bag module (RH) (squib) harness
- Malfunction of the SRS-ECU

TSB Revision

DIAGNOSIS

Required Special Tools:

- MB991958: Scan Tool (M.U.T.-III Sub Assembly)
  - MB991824: Vehicle Communication Interface (V.C.I.)
  - MB991827: M.U.T.-III USB Cable
  - MB991910: M.U.T.-III Main Harness A (Vehicles with CAN Communication System)
- MB991865: Dummy resistor
- MB991866: Resister harness

STEP 1. Using scan tool MB991958, diagnose the CAN bus line.

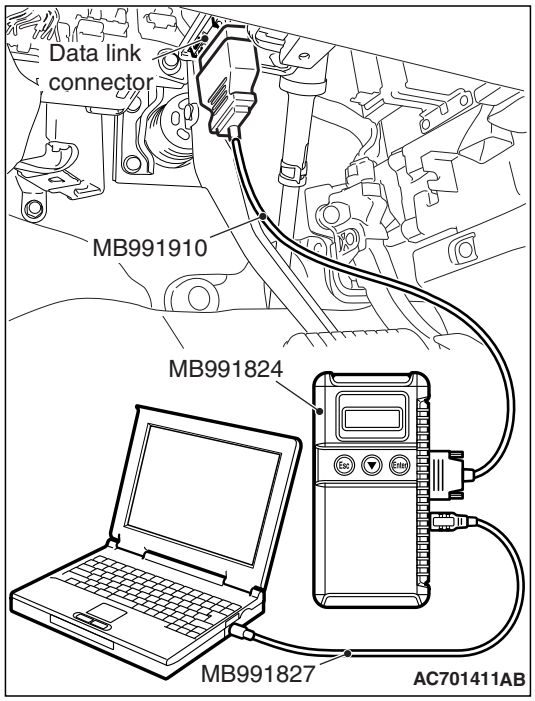

⚠ CAUTION

To prevent damage to scan tool MB991958, always turn the ignition switch to the "LOCK" (OFF) position before connecting or disconnecting scan tool MB991958.

(1) Connect scan tool MB991958. Refer to "How to connect the scan tool P.52B-28."
(2) Turn the ignition switch to "ON" position.
(3) Diagnose the CAN bus line.
(4) Turn the ignition switch to the "LOCK" (OFF) position.

Q: Is the check result satisfactory?

YES : Go to Step 2.
NO : Repair the CAN bus line (Refer to GROUP 54C, Diagnosis P.54C-17).

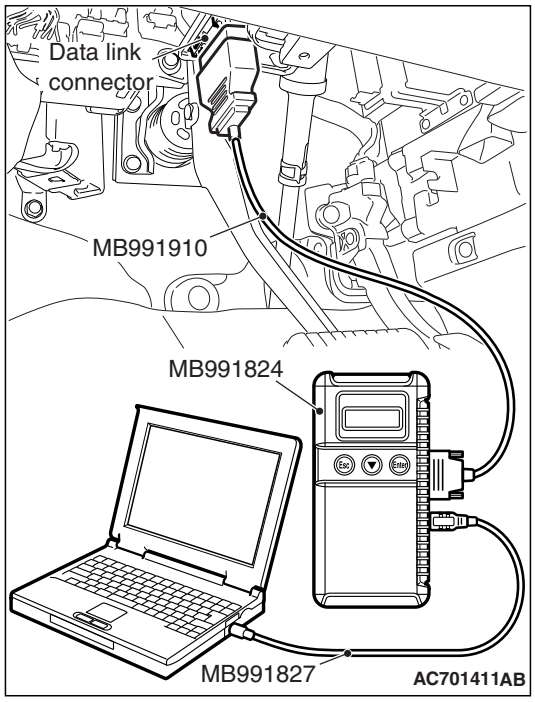

STEP 2. Recheck for diagnostic trouble code.

Check again if the DTC is set.

(1) Erase the DTC.
(2) Turn the ignition switch to "ON" position.
(3) Check if the DTC is set.
(4) Turn the ignition switch to the "LOCK" (OFF) position.

Q: Is the DTC set?

YES : Go to Step 3.

NO : There is an intermittent malfunction such as poor engaged connector(s) or open circuit (Refer to GROUP 00, How to Cope with Intermittent Malfunction P.00-15).

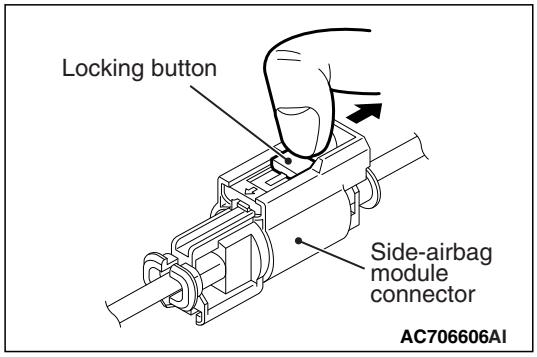

STEP 3. Check the side-air bag module (RH). (Using scan tool MB991958, read the diagnostic trouble code.)

(1) Disconnect the negative battery terminal.
(2) Disconnect the D-31 side-airbag module connector, unlock the connector by sliding the locking button to the direction of the arrow as shown in the figure, and then disconnect the connector.

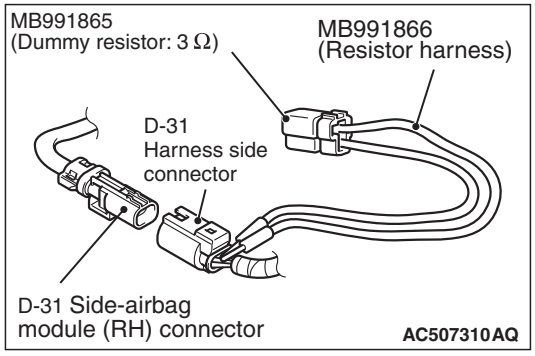

(3) Connect special tool MB991865 to special tool MB991866.

⚠ CAUTION

Do not insert a test probe into the terminal from its front side directly, as the connector contact pressure may be weakened.

(4) Insert special tool MB991866 into the D-31 harness side connector by backprobing.
(5) Connect the negative battery terminal.
(6) Erase the diagnostic trouble code memory, and check the diagnostic trouble code.

Q: Is DTC B1C2C set?

YES : Go to Step 4.

NO : Replace the seatback assembly (Refer to GROUP 52A, Front Seat Assembly P.52A-19). Then go to Step 5.

STEP 4. Check the side-air bag module (RH) circuit.
Measure the voltage at the SRS-ECU connector C-27.

(1) Disconnect the negative battery terminal.
(2) While pushing the part "A" indicated in the figure of the harness side connector, turn the lock lever to the direction of the arrow to release the lock lever, and disconnect the C-27 SRS-ECU connector.

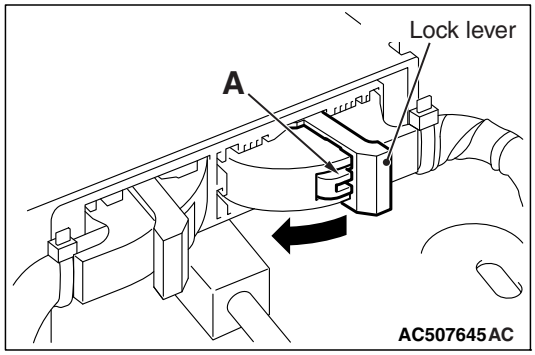

⚠ DANGER

To prevent the air bag from deploying unintentionally, disconnect the side-airbag module (RH) connector D-31 to short the squib circuit.

(3) Disconnect the D-31 side-airbag module connector, unlock the connector by sliding the locking button to the direction of the arrow as shown in the figure, and then disconnect the connector.

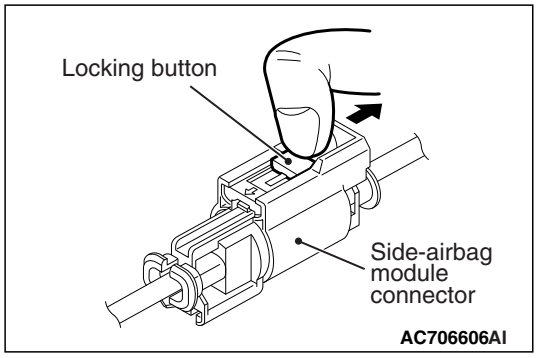

⚠ CAUTION

Insert an insulator such as a cable tie to a depth of 4mm (0.16 inch) or more, otherwise the short spring will not be released.

(4) Insert a cable tie [3 mm (0.12 inch) wide, 0.5 mm (0.02 inch) thick] between terminals 33, 34 and the short spring to release the short spring.
(5) Connect the negative battery terminal.
(6) Ignition switch: "ON".

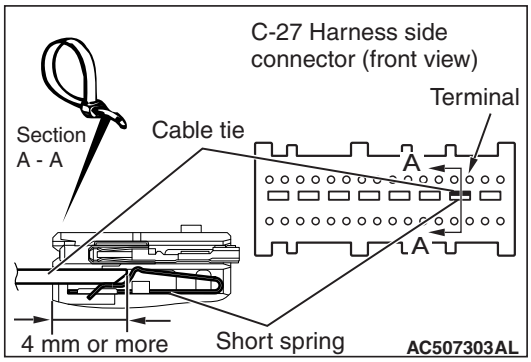

(7) Measure the voltage between C-27 harness side connector terminals 33 and 34 and body ground.
Voltage should measure 1 volt or less.

Q: Is the measured voltage within the specified range?

YES : Erase the diagnostic trouble code memory, and check the diagnostic trouble code. If DTC B1C2C sets, replace the SRS-ECU. (Refer to P.52B-440). Then go to Step 6.

NO : Go to Step 5.

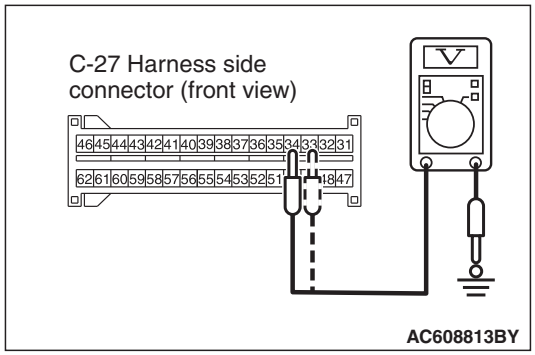

STEP 5. Check the harness wires for short circuit to power supply between SRS-ECU connector C-27 (terminal No.33 and 34) and side-air bag module (RH) connector D-31 (terminal No.1 and 2).

Q: Is the check result normal?

YES : Go to Step 6.

NO : Repair the harness wires between SRS-ECU connector C-27 and side-air bag module (RH) connector D-31. Then go to Step 6.

STEP 6. Recheck for diagnostic trouble code.

Check again if the DTC is set.

(1) Erase the DTC.
(2) Turn the ignition switch to the "ON" position.
(3) Check if the DTC is set.
(4) Turn the ignition switch to the "LOCK" (OFF) position.

Q: Is DTC B1C2C set?

YES : Return to Step 1.

NO : The procedure is complete.

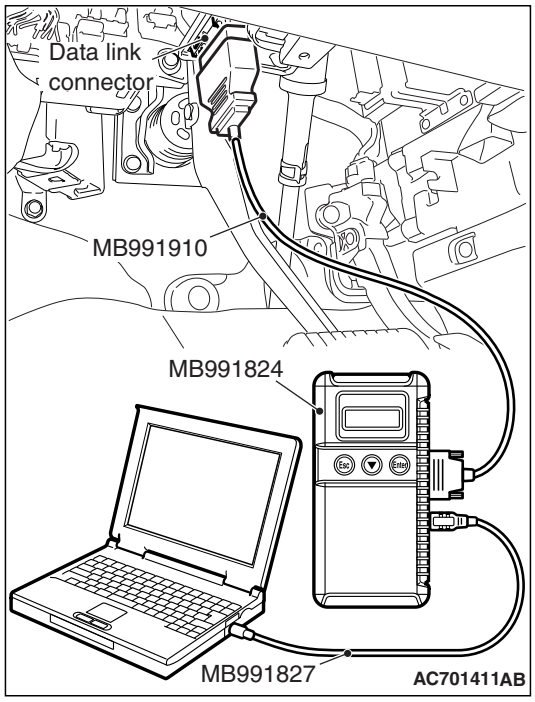

DTC B1C2D: Side-air bag Module (RH) (Squib) System (Squib Circuit Open)

Side-Airbag Module (Squib) (RH) Circuit

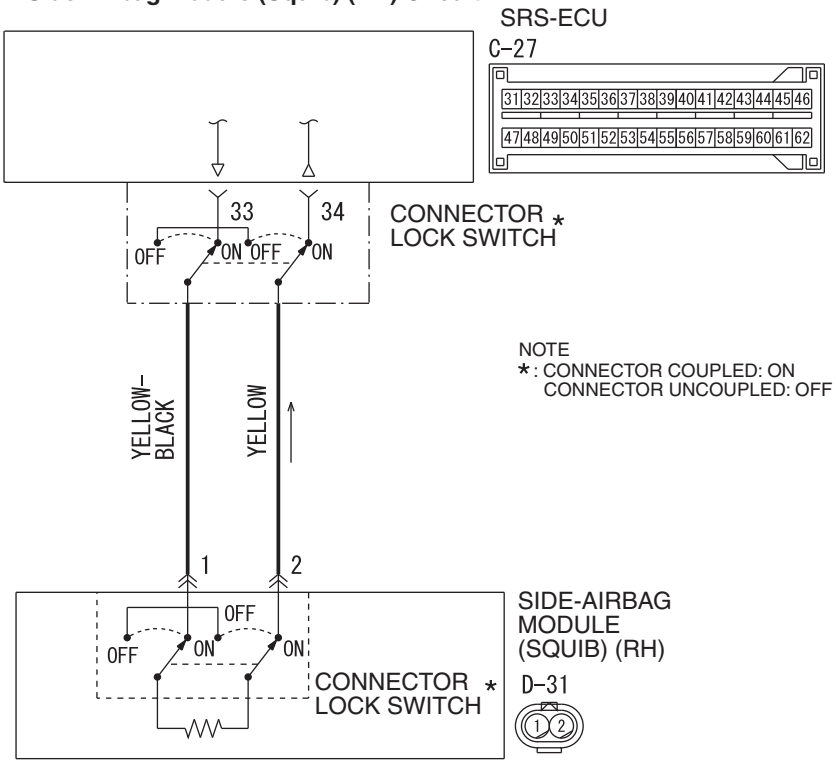

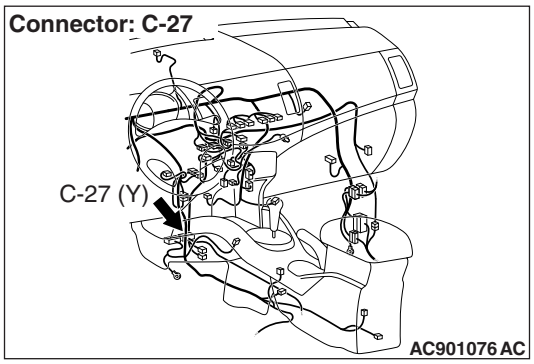

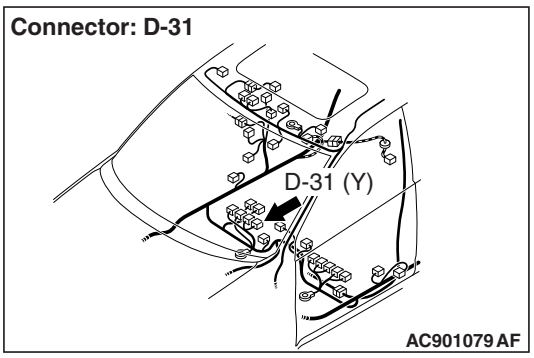

⚠ CAUTION

If DTC B1C2D is set in the SRS-ECU, always diagnose the CAN bus lines.

CIRCUIT OPERATION

- The SRS-ECU judges how severe a collision is by detecting signals from the side impact sensor installed on the lower side of the center pillar. If the impact is over a predetermined level, the SRS-ECU sends an ignition signal. At this time, if the side collision safing G-sensor is on, the SRS air bag will inflate.
- The ignition signal is input to the side-air bag module to inflate the side-air bag.

DTC SET CONDITIONS

This DTC is set if there is abnormal resistance between the input terminals of the side-air bag module (RH) (squib).

TROUBLESHOOTING HINTS

- Open circuit in the side-air bag module (RH) (squib) circuit
- Improper connector contact
- Malfunction of the SRS-ECU

DIAGNOSIS

Required Special Tools:

- MB991958: Scan Tool (M.U.T.-III Sub Assembly)
  - MB991824: Vehicle Communication Interface (V.C.I.)
  - MB991827: M.U.T.-III USB Cable
  - MB991910: M.U.T.-III Main Harness A (Vehicles with CAN Communication System)
- MB991865: Dummy resistor
- MB991866: Resister harness

STEP 1. Using scan tool MB991958, diagnose the CAN bus line.

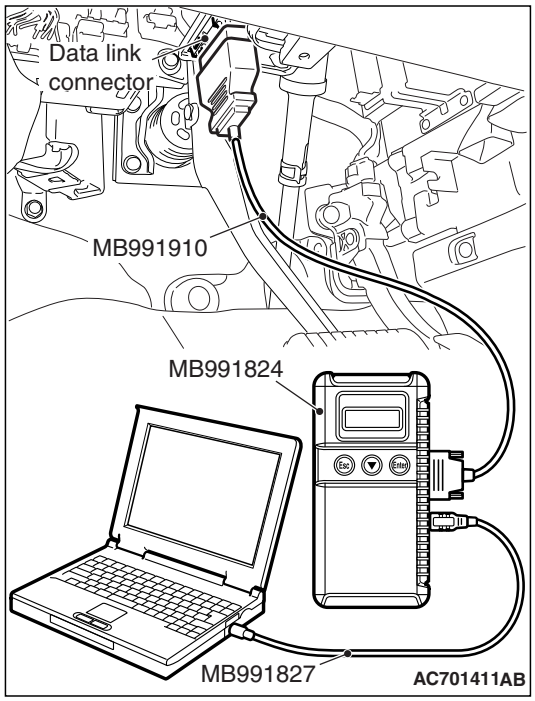

⚠ CAUTION

To prevent damage to scan tool MB991958, always turn the ignition switch to the "LOCK" (OFF) position before connecting or disconnecting scan tool MB991958.

(1) Connect scan tool MB991958. Refer to "How to connect the scan tool P.52B-28."
(2) Turn the ignition switch to "ON" position.
(3) Diagnose the CAN bus line.
(4) Turn the ignition switch to the "LOCK" (OFF) position.

Q: Is the check result satisfactory?

YES : Go to Step 2.
NO : Repair the CAN bus line (Refer to GROUP 54C, Diagnosis P.54C-17).

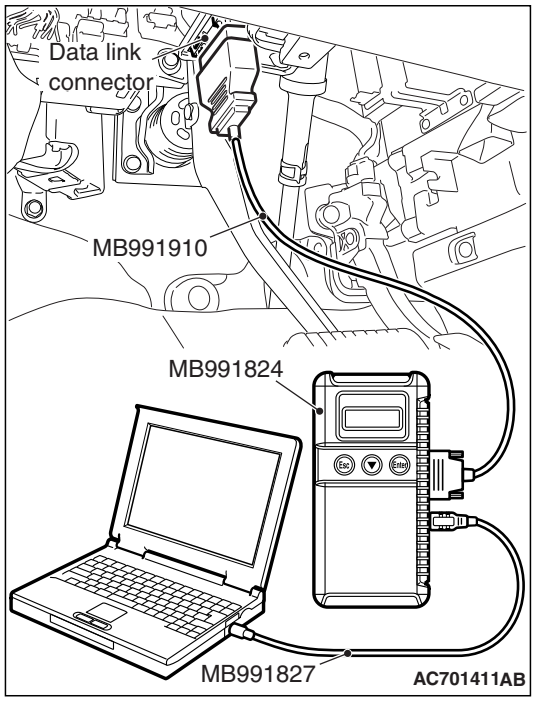

STEP 2. Recheck for diagnostic trouble code.

Check again if the DTC is set.

(1) Erase the DTC.
(2) Turn the ignition switch to "ON" position.
(3) Check if the DTC is set.
(4) Turn the ignition switch to the "LOCK" (OFF) position.

Q: Is the DTC set?

YES : Go to Step 3.

NO : There is an intermittent malfunction such as poor engaged connector(s) or open circuit (Refer to GROUP 00, How to Cope with Intermittent Malfunction P.00-15).

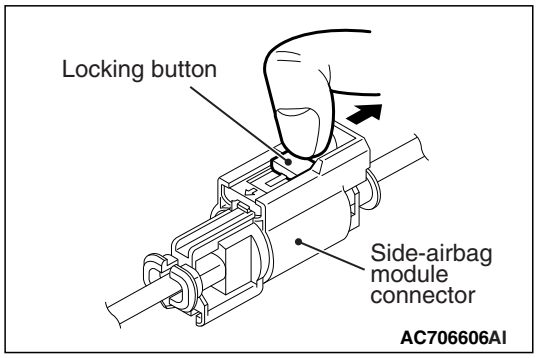

STEP 3. Check the side-air bag module (RH). (Using scan tool MB991958, read the diagnostic trouble code.)

(1) Disconnect the negative battery terminal.
(2) Disconnect the D-31 side-airbag module connector, unlock the connector by sliding the locking button to the direction of the arrow as shown in the figure, and then disconnect the connector.

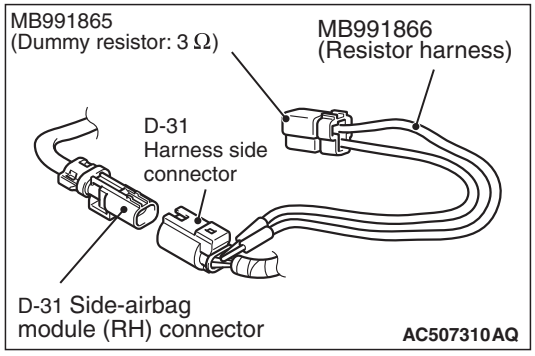

(3) Connect special tool MB991865 to special tool MB991866.

⚠ CAUTION

Do not insert a test probe into the terminal from its front side directly, as the connector contact pressure may be weakened.

(4) Insert special tool MB991866 into the D-31 harness side connector by backprobing.
(5) Connect the negative battery terminal.
(6) Erase the diagnostic trouble code memory, and check the diagnostic trouble code.

Q: Is DTC B1C2D set?

YES : Go to Step 4.

NO : Replace the seatback assembly (Refer to GROUP 52A, Front Seat Assembly P.52A-19). Then go to Step 5.

STEP 4. Check the harness for open circuit between SRS-ECU connector C-27 (terminal No.33 and 34) and the side-air bag module (RH) connector D-31 (terminal No.1 and 2).

(1) Disconnect the negative battery terminal.

(2) While pushing the part "A" indicated in the figure of the harness side connector, turn the lock lever to the direction of the arrow to release the lock lever, and disconnect the C-27 SRS-ECU connector.

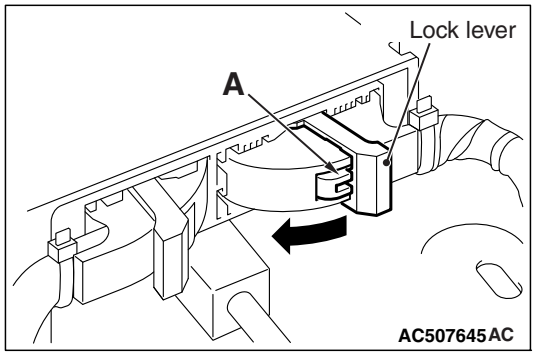

⚠ ***DANGER***

To prevent the air bag from deploying unintentionally, disconnect the side-airbag module (RH) connector D-31 to short the squib circuit.

(3) Disconnect the D-31 side-airbag module connector, unlock the connector by sliding the locking button to the direction of the arrow as shown in the figure, and then disconnect the connector.

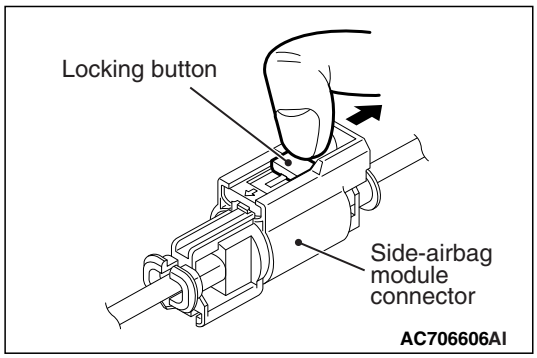

⚠ **CAUTION**

Insert an insulator such as a cable tie to a depth of 4mm (0.16 inch) or more, otherwise the short spring will not be released.

(4) Insert a cable tie [3 mm (0.12 inch) wide, 0.5 mm (0.02 inch) thick] between terminals 33, 34 and the short spring to release the short spring.

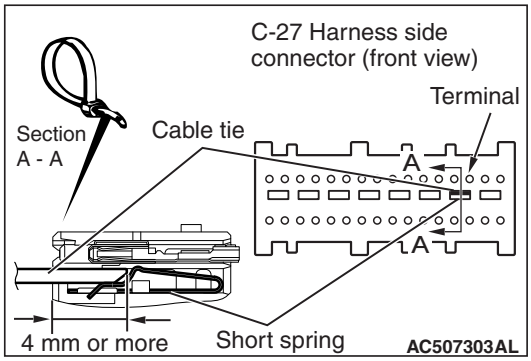

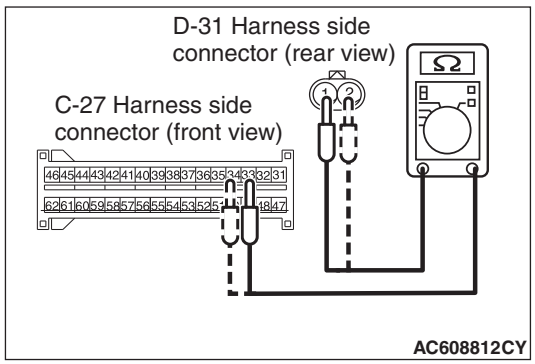

⚠ CAUTION

Do not insert a test probe into the terminal from D-31 harness side connector front side directly, as the connector contact pressure may be weakened.

(5) Check for continuity between the following terminals. It should be less than 2 ohms.
- SRS-ECU connector C-27 (terminal No.33) and the side-air bag module (RH) connector D-31 (terminal No.1)
- SRS-ECU connector C-27 (terminal No.34) and the side-air bag module (RH) connector D-31 (terminal No.2)

Q: Does continuity exist?

YES : Erase the diagnostic trouble code memory, and check the diagnostic trouble code. If DTC B1C2D sets, replace the SRS-ECU. (Refer to P.52B-440). Then go to Step 5.

NO : Repair the harness wires between SRS-ECU connector C-27 and side-air bag module (RH) connector D-31. Then go to Step 5.

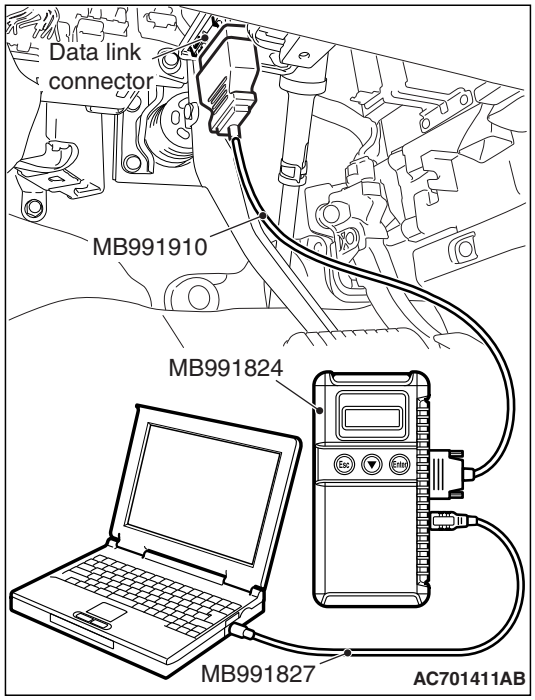

STEP 5. Recheck for diagnostic trouble code.

Check again if the DTC is set.

(1) Erase the DTC.
(2) Turn the ignition switch to the "ON" position.
(3) Check if the DTC is set.
(4) Turn the ignition switch to the "LOCK" (OFF) position.

Q: Is DTC B1C2D set?

YES : Return to Step 1.

NO : The procedure is complete.

DTC B1C2E: Side-air bag Module (RH) (Squib) System (Short Circuit between Squib Circuit Terminals)

Side-Airbag Module (Squib) (RH) Circuit

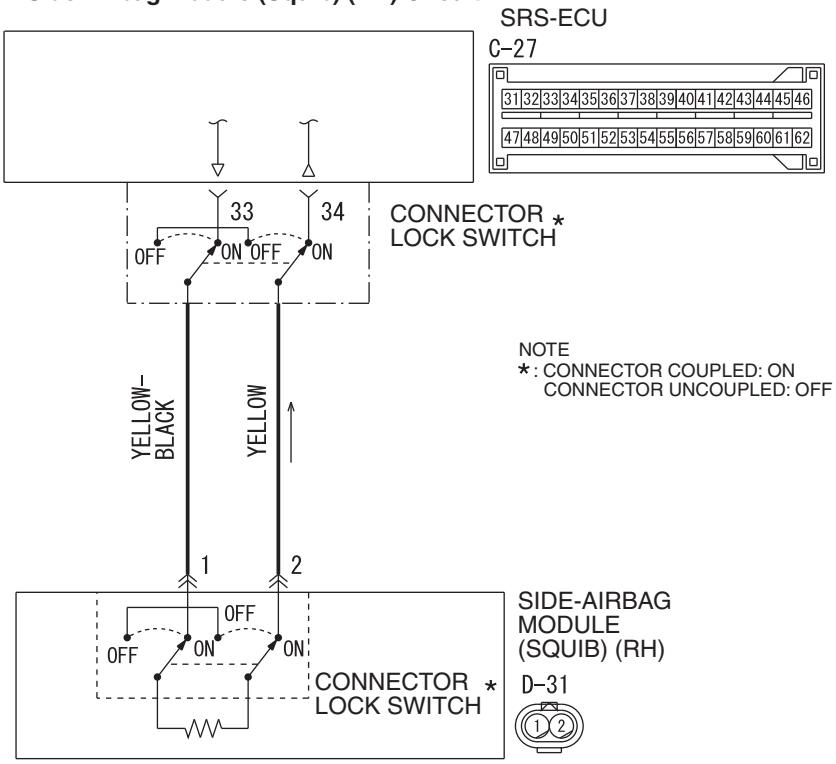

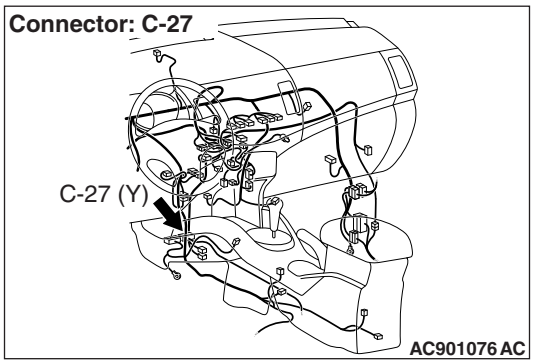

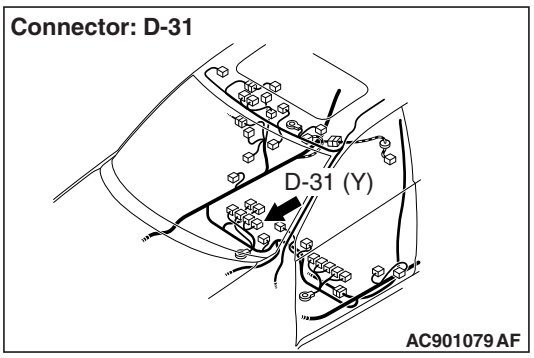

⚠ CAUTION

If DTC B1C2E is set in the SRS-ECU, always diagnose the CAN bus lines.

CIRCUIT OPERATION

- The SRS-ECU judges how severe a collision is by detecting signals from the side impact sensor installed on the lower side of the center pillar. If the impact is over a predetermined level, the SRS-ECU sends an ignition signal. At this time, if the side collision safing G-sensor is on, the SRS air bag will inflate.
- The ignition signal is input to the side-air bag module to inflate the side-air bag.

DTC SET CONDITIONS

This DTC is set if there is abnormal resistance between the input terminals of the side-air bag module (RH) (squib).

TROUBLESHOOTING HINTS

- Improper engaged connector or defective short spring*
- Short between the side-air bag module (RH) (squib) circuit terminals
- Damaged connector(s)
- Malfunction of the SRS-ECU

TSB Revision

*NOTE: *: The squib circuit connectors integrate a "short" spring (which prevents the air bag from deploying unintentionally due to static electricity by shorting the positive wire to the ground wire in the squib circuit when the connectors are disconnected). (Refer to P.52B-3). Therefore, if connector C-27 or D-31 is damaged or improperly engaged, the short spring may not be released when the connector is connected.*

DIAGNOSIS

Required Special Tools:

- MB991958: Scan Tool (M.U.T.-III Sub Assembly)
  - MB991824: Vehicle Communication Interface (V.C.I.)
  - MB991827: M.U.T.-III USB Cable
  - MB991910: M.U.T.-III Main Harness A (Vehicles with CAN communication system)
- MB991865: Dummy resister
- MB991866: Resister harness

STEP 1. Using scan tool MB991934, diagnose the CAN bus line.

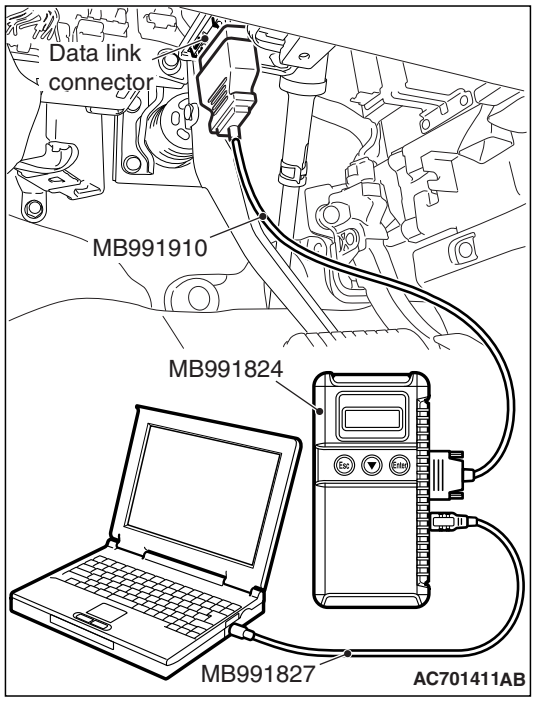

⚠ CAUTION

To prevent damage to scan tool MB991934, always turn the ignition switch to the "LOCK" (OFF) position before connecting or disconnecting scan tool MB991934.

(1) Connect scan tool MB991934. Refer to "How to connect the scan tool P.52B-28."
(2) Turn the ignition switch to "ON" position.
(3) Diagnose the CAN bus line.
(4) Turn the ignition switch to the "LOCK" (OFF) position.

Q: Is the check result satisfactory?

YES : Go to Step 2.
NO : Repair the CAN bus line (Refer to GROUP 54C, Diagnosis P.54C-17).

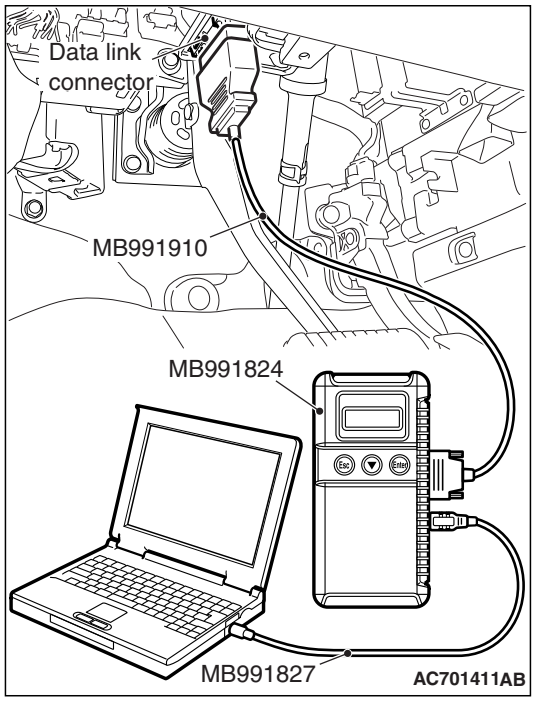

STEP 2. Recheck for diagnostic trouble code.

Check again if the DTC is set.

(1) Erase the DTC.
(2) Turn the ignition switch to "ON" position.
(3) Check if the DTC is set.
(4) Turn the ignition switch to the "LOCK" (OFF) position.

Q: Is the DTC set?

YES : Go to Step 3.

NO : There is an intermittent malfunction such as poor engaged connector(s) or open circuit (Refer to GROUP 00, How to Cope with Intermittent Malfunction P.00-15).

STEP 3. Check SRS-ECU connector C-27 and side-air bag module (RH) connector D-31. (Using scan tool MB991958, read the diagnostic trouble code.)

(1) Disconnect the negative battery terminal.
(2) While pressing the part A in the illustration of the C-27 SRS-ECU harness side connector, turn the lock lever toward the arrow direction to release the lock lever. Then, disconnect the connector and reconnect it.

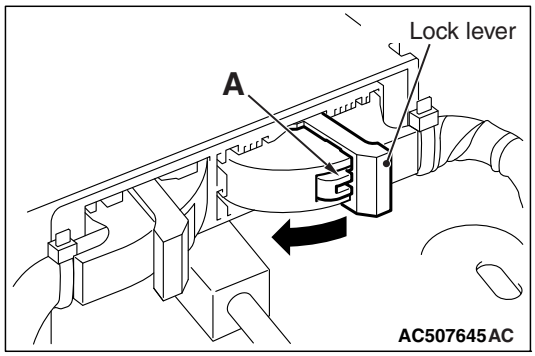

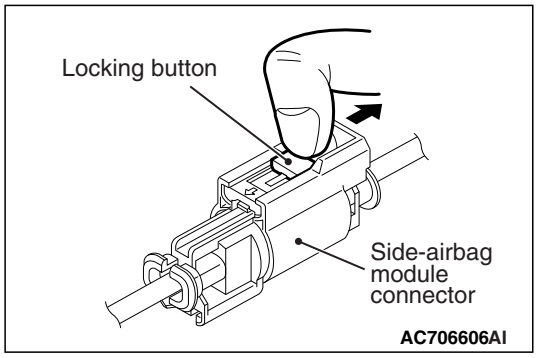

(3) Disconnect the D-31 side-airbag module connector, and then reconnect it. Unlock the connector by sliding the locking button to the direction of the arrow as shown in the figure, and then disconnect the connector.
(4) Connect the negative battery terminal.
(5) Erase the diagnostic trouble code memory, and check the diagnostic trouble code.

Q: Is DTC B1C2E out put?

YES : Go to Step 4.

NO : The procedure is complete. It is assumed that DTC B1C2E set because connector C-27 or D-31 was engaged improperly.

STEP 4. Check the side-air bag module (RH). (Using scan tool MB991934, read the diagnostic trouble code.)

(1) Disconnect the negative battery terminal.

(2) Disconnect the D-31 side-airbag module connector, and then reconnect them, unlock the connector by sliding the locking button to the direction of the arrow as shown in the figure, and then disconnect the connector.

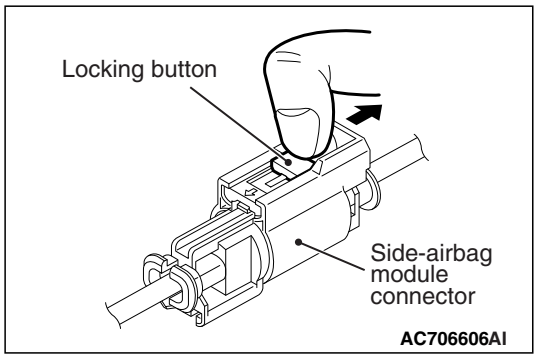

(3) Connect special tool MB991865 to special tool MB991866.

⚠ CAUTION

Do not insert a test probe into the terminal from its front side directly, as the connector contact pressure may be weakened.

(4) Insert special tool MB991866 into the D-31 harness side connector by backprobing.

(5) Connect the negative battery terminal.

(6) Erase the diagnostic trouble code memory, and check the diagnostic trouble code.

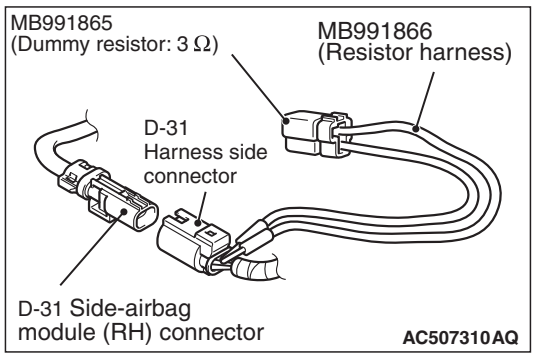

Q: Is DTC B1C2E set?

YES : Go to Step 5.

NO : Replace the seatback assembly (Refer to GROUP 52A, Front Seat Assembly P.52A-19). Then go to Step 7.

STEP 5. Check the side-air bag module (RH) circuit. Measure the resistance at the SRS-ECU connector C-27.

(1) Disconnect the negative battery terminal.

(2) While pushing the part "A" indicated in the figure of the harness side connector, turn the lock lever to the direction of the arrow to release the lock lever, and disconnect the C-27 SRS-ECU connector.

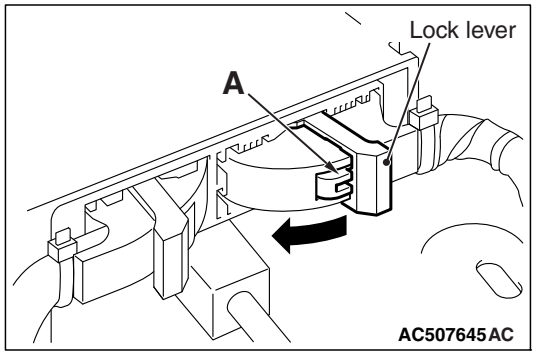

⚠ DANGER

To prevent the air bag from deploying unintentionally, disconnect the side-airbag module (RH) connector D-31 to short the squib circuit.

(3) Disconnect the D-31 side-airbag module connector, unlock the connector by sliding the locking button to the direction of the arrow as shown in the figure, and then disconnect the connector.

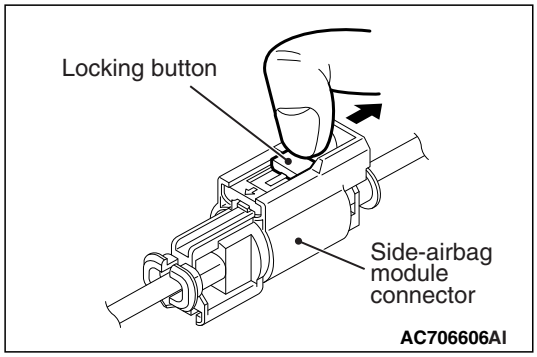

⚠ CAUTION

Insert an insulator such as a cable tie to a depth of 4mm (0.16 inch) or more, otherwise the short spring will not be released.

(4) Insert a cable tie [3 mm (0.12 inch) wide, 0.5 mm (0.02 inch) thick] between terminals 33, 34 and the short spring to release the short spring.

(5) Measure at the wiring harness side.

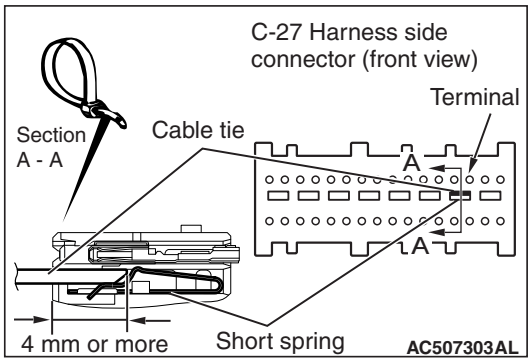

(6) Check for continuity between C-27 harness side connector terminals 33 and 34.
It should be open circuit.

Q: Is it open circuit?

YES : Erase the diagnostic trouble code memory, and check the diagnostic trouble code. If DTC B1C2E sets, replace the SRS-ECU. (Refer to P.52B-440). Then go to Step 7.

NO : Go to Step 6.

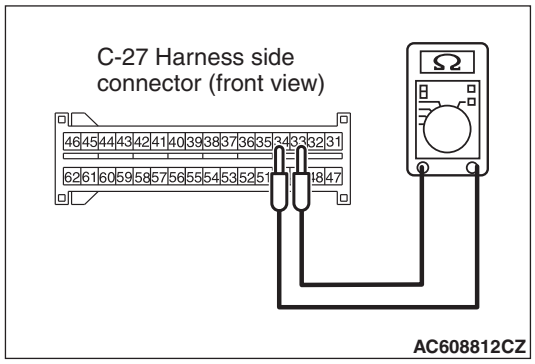

STEP 6. Check the harness wires for short circuit between SRS-ECU connector C-27 (terminal No.33 and 34) and side-air bag module (RH) connector D-31 (terminal No.1 and 2).

Q: Is the check result normal?

YES : Go to Step 7.

NO : Repair the harness wires between SRS-ECU connector C-27 and side-air bag module (RH) connector D-31. Then go to Step 7.

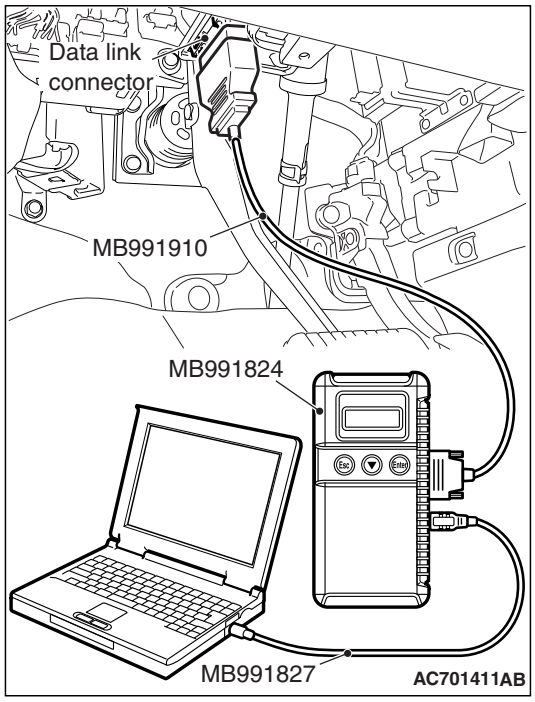

STEP 7. Recheck for diagnostic trouble code.

Check again if the DTC is set.

(1) Erase the DTC.

(2) Turn the ignition switch to the "ON" position.

(3) Check if the DTC is set.

(4) Turn the ignition switch to the "LOCK" (OFF) position.

Q: Is DTC B1C2E set?

YES : Return to Step 1.

NO : The procedure is complete.

DTC B1C33: Driver's Lap Pre-tensioner (Squib) System (Shorted to Squib Circuit Ground)

Driver's Lap pre-tensioner (Squib) Circuit

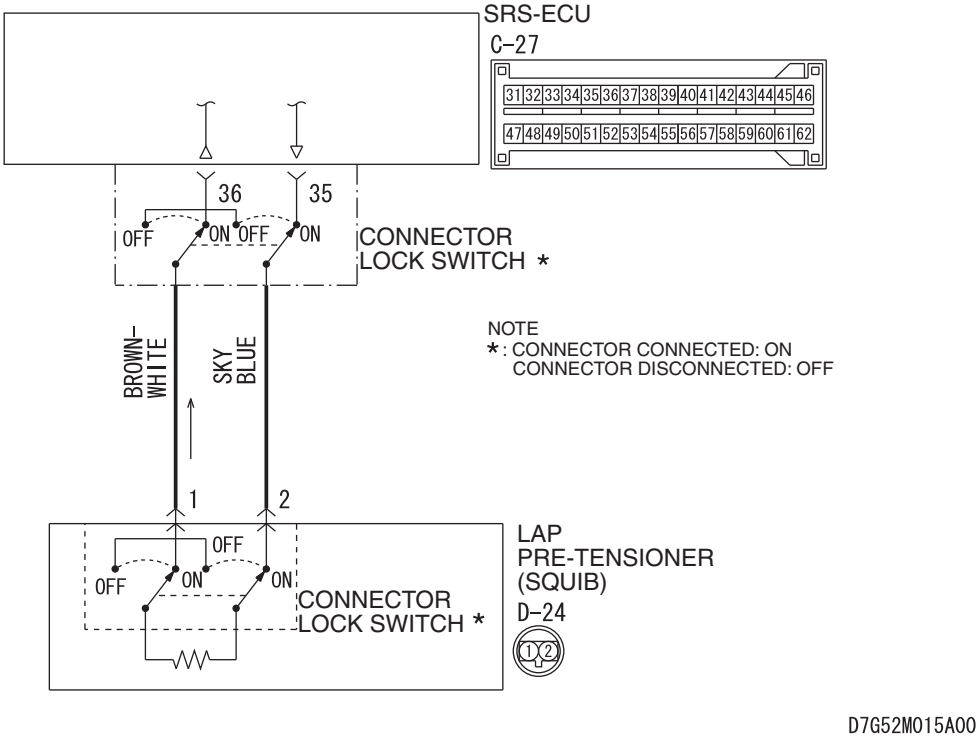

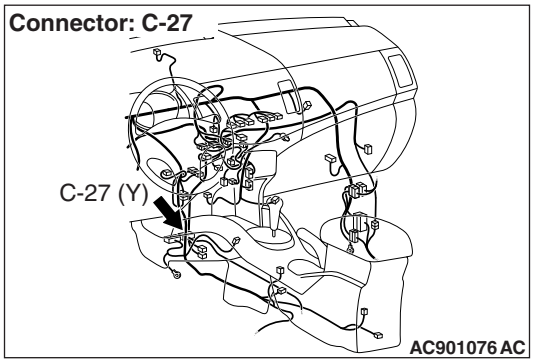

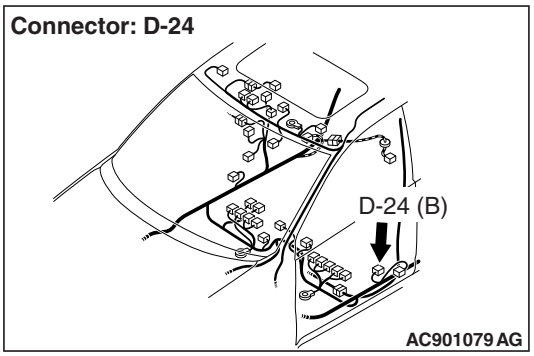

⚠ CAUTION

If DTC B1C33 is set in the SRS-ECU, always diagnose the CAN main bus line.

CIRCUIT OPERATION

The SRS-ECU judges how severe a collision is by detecting signals from the front impact sensors and the front air bag analog G-sensor. If the impact is over a predetermined level, the SRS-ECU sends an ignition signal. At this time, if the front air bag safing G-sensor is on, the lap pre-tensioner will deploy.

DTC SET CONDITIONS

This DTC is set if there is abnormal resistance between the input terminals of the lap pre-tensioner (squib).

TROUBLESHOOTING HITS

- Damaged wiring harnesses or connectors
- Short to the ground in the lap pre-tensioner (squib) harness
- Malfunction of the SRS-ECU

DIAGNOSIS

Required Special Tools:

- MB991958: Scan Tool (M.U.T.-III Sub Assembly)
  - MB991824: Vehicle Communication Interface (V.C.I.)
  - MB991827: M.U.T.-III USB Cable
  - MB991910: M.U.T.-III Main Harness A (Vehicles with CAN Communication System)
- MB991865: Dummy resistor
- MB991884: Resister harness

STEP 1. Using scan tool MB991958, diagnose the CAN bus line.

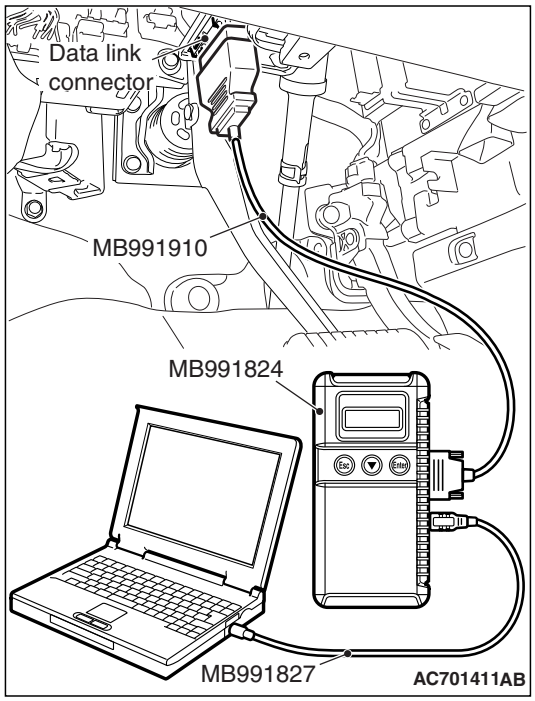

⚠ CAUTION

To prevent damage to scan tool MB991958, always turn the ignition switch to the "LOCK" (OFF) position before connecting or disconnecting scan tool MB991958.

(1) Connect scan tool MB991958. Refer to "How to connect the scan tool P.52B-28."
(2) Turn the ignition switch to the "ON" position.
(3) Diagnose the CAN bus line.
(4) Turn the ignition switch to the "LOCK" (OFF) position.

Q: Is the CAN bus line found to be normal?

YES : Go to Step 2.
NO : Repair the CAN bus line (Refer to GROUP 54C, Diagnosis P.54C-17).

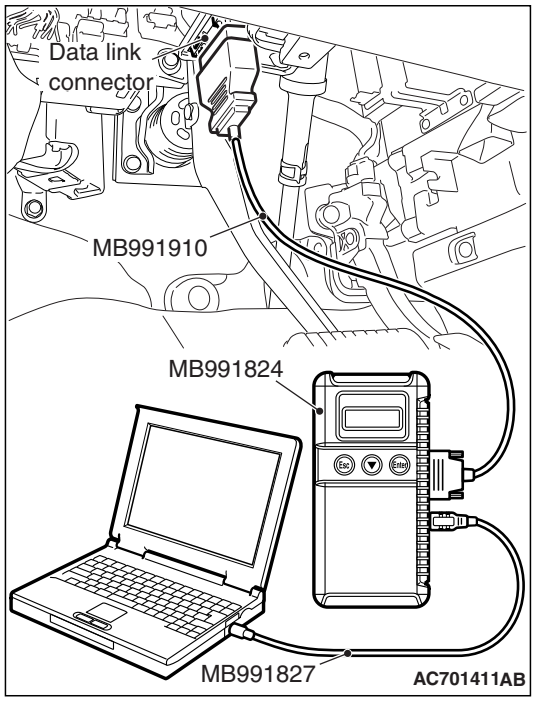

STEP 2. Recheck for diagnostic trouble code.

Check again if the DTC is set.

(1) Erase the DTC.
(2) Turn the ignition switch to the "ON" position.
(3) Check if the DTC is set.
(4) Turn the ignition switch to the "LOCK" (OFF) position.

Q: Is the DTC set?

YES : Go to Step 3.

NO : There is an intermittent malfunction such as poor engaged connector(s) or open circuit (Refer to GROUP 00, How to Cope with Intermittent Malfunction P.00-15).

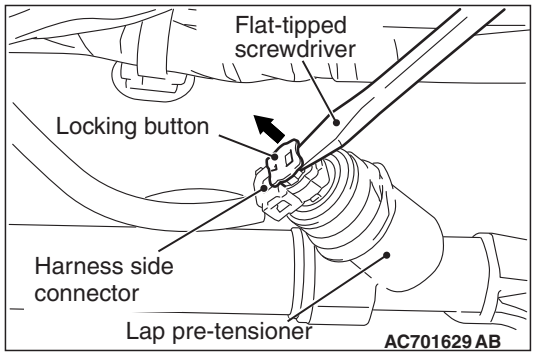

STEP 3. Check the lap pre-tensioner. (Using scan tool MB991958, read the diagnostic trouble code.)

(1) Disconnect the negative battery terminal.
(2) Disconnect lap pre-tensioner connector D-24. Use a flat-tipped screwdriver to unlock the locking button at the harness side connector by withdrawing it toward you in two stages, and then disconnect the connector.

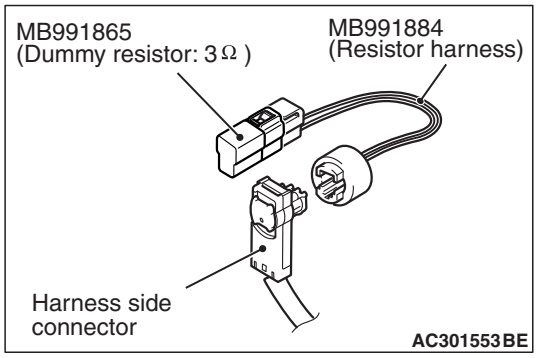

(3) Connect special tool MB991865 to special tool MB991884.
(4) Connect special tool MB991884 to the D-24 harness side connector.
(5) Connect the negative battery terminal.
(6) Erase diagnostic trouble code memory, and check the diagnostic trouble code.

Q: Is DTC B1C33 set?

YES : Go to Step 4.

NO : Replace the driver's seat belt with pre-tensioner. Refer to P.52B-461. Then go to Step 6.

STEP 4. Check the lap pre-tensioner circuit. Measure the resistance at the SRS-ECU connector C-27.

(1) Disconnect the negative battery terminal.

(2) While pushing the part "A" indicated in the figure of the harness side connector, turn the lock lever to the direction of the arrow to release the lock lever, and disconnect the C-27 SRS-ECU connector.

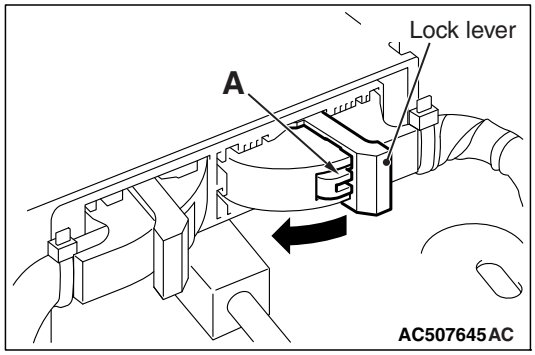

⚠ DANGER

To prevent the lap pre-tensioner from deploying unintentionally, disconnect the lap pre-tensioner connector D-24 to short the squib circuit.

(3) Disconnect lap pre-tensioner connector D-24. Use a flat-tipped screwdriver to unlock the locking button at the harness side connector by withdrawing it toward you in two stages, and then disconnect the connector.

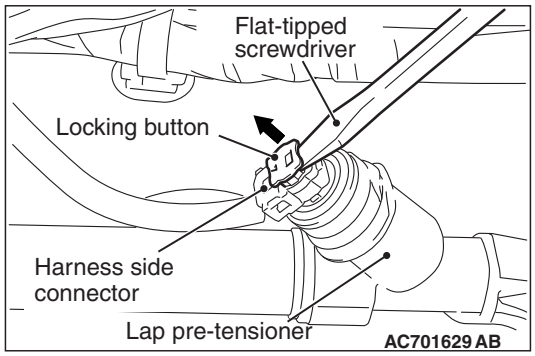

⚠ CAUTION

Insert an insulator such as a cable tie to a depth of 4mm (0.16 inch) or more, otherwise the short spring will not be released.

(4) Insert a cable tie [3 mm (0.12 inch) wide, 0.5 mm (0.02 inch) thick] between terminals 35, 36 and the short spring to release the short spring.

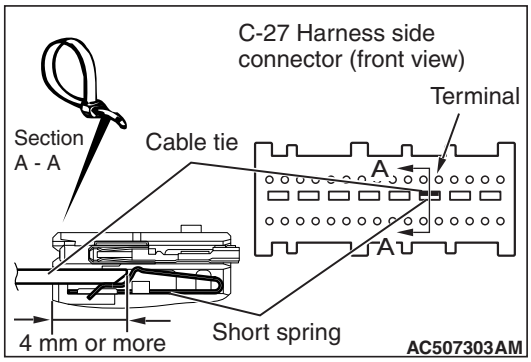

(5) Check for continuity between C-27 harness side connector terminals 35, 36 and body ground.
It should be an open circuit.

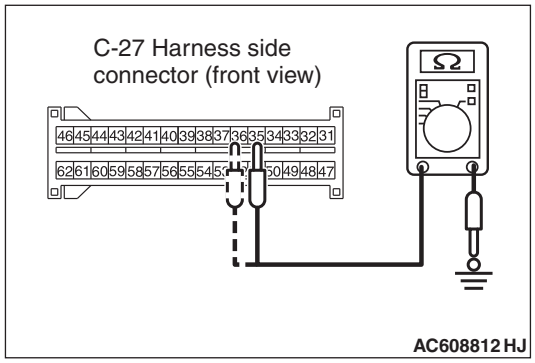

Q: Is it open circuit?

YES : Erase the diagnostic trouble code memory, and check the diagnostic trouble code. If DTC B1C33 sets, replace the SRS-ECU (Refer to P.52B-440). Then go to Step 6.

NO : Go to Step 5.

STEP 5. Check harness wires for short circuit to ground between SRS-ECU connector C-27 (terminal No.35 and 36) and lap pre-tensioner connector D-24 (terminal No.2 and 1).

Q: Is the check result normal?

YES : Go to Step 6.

NO : Repair the harness wires between SRS-ECU connector C-27 and lap pre-tensioner connector D-24. Then go to Step 6.

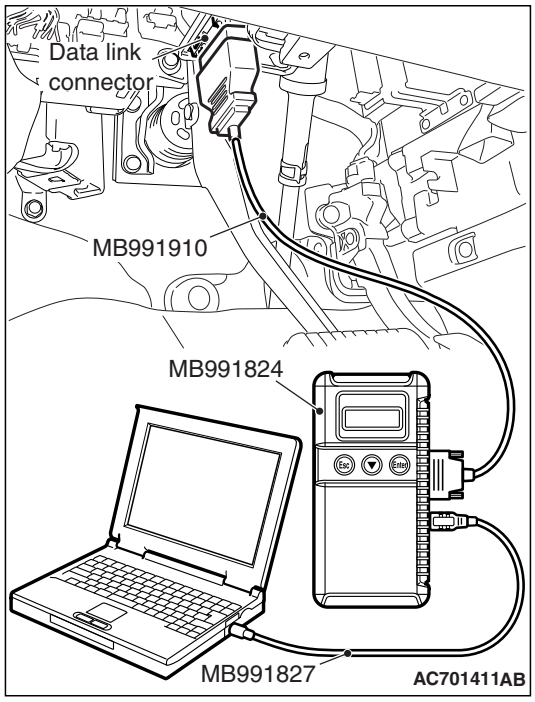

STEP 6. Recheck for diagnostic trouble code.

Check again if the DTC is set.

(1) Erase the DTC.
(2) Turn the ignition switch to the "ON" position.
(3) Check if the DTC is set.
(4) Turn the ignition switch to the "LOCK" (OFF) position.

Q: Is DTC B1C33 set?

YES : Return to Step 1.

NO : The procedure is complete.

DTC B1C34: Driver's Lap Pre-tensioner (Squib) System (Shorted to Squib Circuit Power Supply)

Driver's Lap pre-tensioner (Squib) Circuit

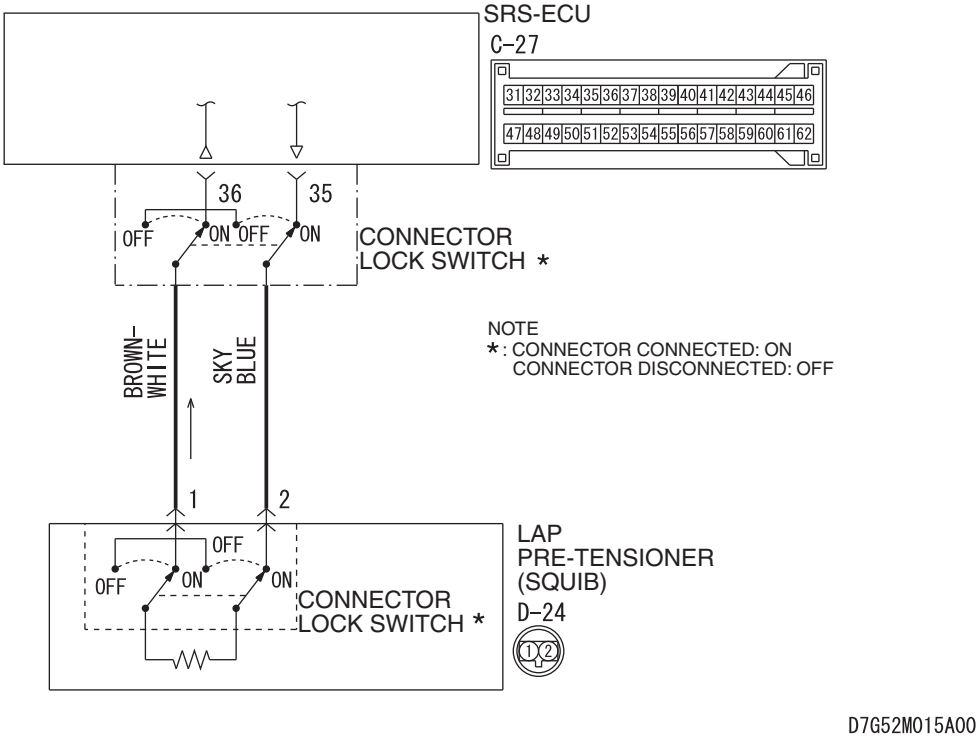

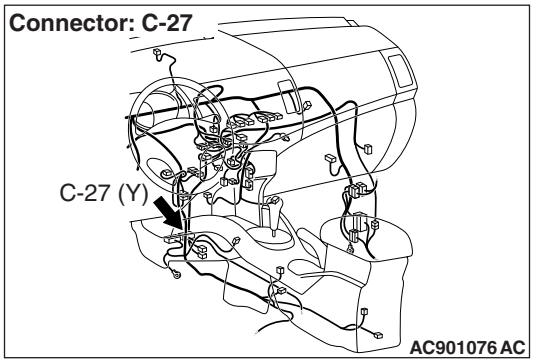

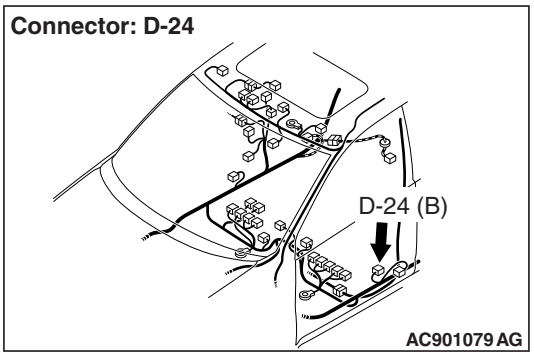

⚠ CAUTION

If DTC B1C34 is set in the SRS-ECU, always diagnose the CAN main bus line.

CIRCUIT OPERATION

The SRS-ECU judges how severe a collision is by detecting signals from the front impact sensors and the front air bag analog G-sensor. If the impact is over a predetermined level, the SRS-ECU sends an ignition signal. At this time, if the front air bag safing G-sensor is on, the lap pre-tensioner will deploy.

DTC SET CONDITIONS

This DTC is set if there is abnormal resistance between the input terminals of the lap pre-tensioner (squib).

TROUBLESHOOTING HITS

- Damaged wiring harnesses or connectors
- Short to power supply in the lap pre-tensioner (squib) harness
- Malfunction of the SRS-ECU

DIAGNOSIS

Required Special Tools:

- MB991958: Scan Tool (M.U.T.-III Sub Assembly)
  - MB991824: Vehicle Communication Interface (V.C.I.)
  - MB991827: M.U.T.-III USB Cable
  - MB991910: M.U.T.-III Main Harness A (Vehicles with CAN Communication System)
- MB991865: Dummy resistor
- MB991884: Resister harness

STEP 1. Using scan tool MB991958, diagnose the CAN bus line.

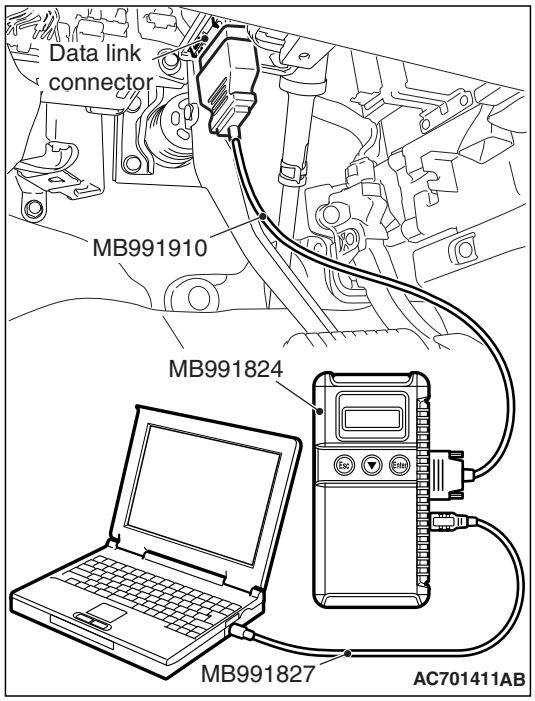

⚠ CAUTION

To prevent damage to scan tool MB991958, always turn the ignition switch to the "LOCK" (OFF) position before connecting or disconnecting scan tool MB991958.

(1) Connect scan tool MB991958. Refer to "How to connect the scan tool P.52B-28."
(2) Turn the ignition switch to the "ON" position.
(3) Diagnose the CAN bus line.
(4) Turn the ignition switch to the "LOCK" (OFF) position.

Q: Is the CAN bus line found to be normal?

YES : Go to Step 2.
NO : Repair the CAN bus line (Refer to GROUP 54C, Diagnosis P.54C-17).

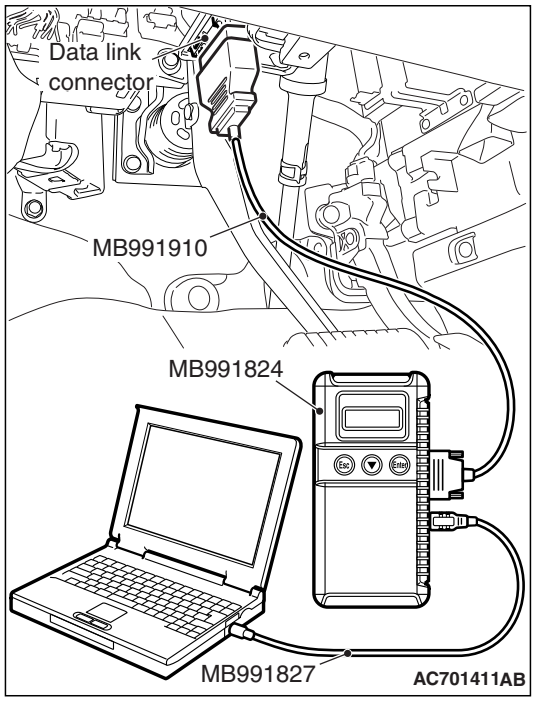

STEP 2. Recheck for diagnostic trouble code.

Check again if the DTC is set.

(1) Erase the DTC.
(2) Turn the ignition switch to "ON" position.
(3) Check if the DTC is set.
(4) Turn the ignition switch to the "LOCK" (OFF) position.

Q: Is the DTC set?

YES : Go to Step 3.
NO : Go to Step 6.

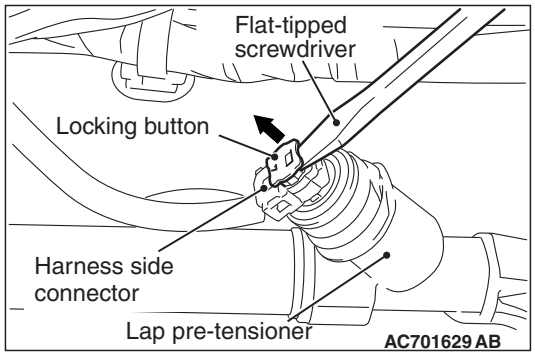

STEP 3. Check the lap pre-tensioner. (Using scan tool MB991958, read the diagnostic trouble code.)

(1) Disconnect the negative battery terminal.
(2) Disconnect lap pre-tensioner connector D-24. Use a flat-tipped screwdriver to unlock the locking button at the harness side connector by withdrawing it toward you in two stages, and then disconnect the connector.

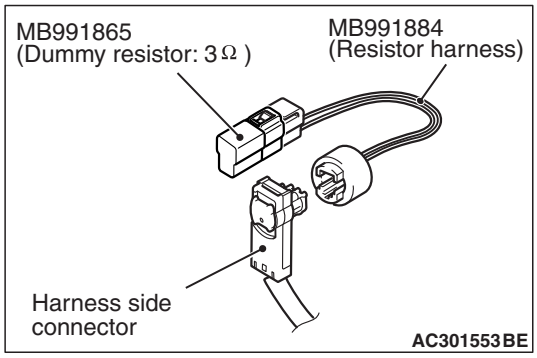

(3) Connect special tool MB991865 to special tool MB991884.
(4) Connect special tool MB991884 to the D-24 harness side connector.
(5) Connect the negative battery terminal.
(6) Erase diagnostic trouble code memory, and check the diagnostic trouble code.

Q: Is DTC B1C34 set?

YES : Go to Step 4.
NO : Replace the driver's seat belt with pre-tensioner. (Refer to P.52B-461). Then go to Step 6.

STEP 4. Check the lap pre-tensioner circuit. Measure the voltage at the SRS-ECU connector C-27.

(1) Disconnect the negative battery terminal.

(2) While pushing the part "A" indicated in the figure of the harness side connector, turn the lock lever to the direction of the arrow to release the lock lever, and disconnect the C-27 SRS-ECU connector.

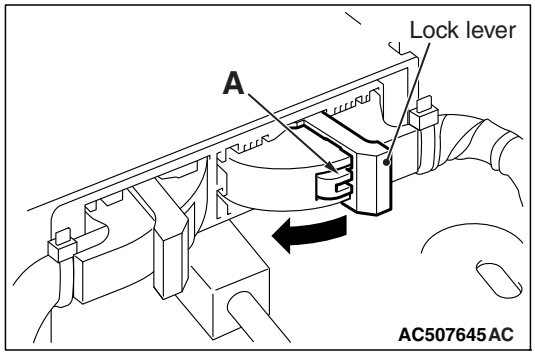

⚠ ***DANGER***

To prevent the lap pre-tensioner from deploying unintentionally, disconnect the lap pre-tensioner connector D-24 to short the squib circuit.

(3) Disconnect lap pre-tensioner connector D-24. Use a flat-tipped screwdriver to unlock the locking button at the harness side connector by withdrawing it toward you in two stages, and then disconnect the connector.

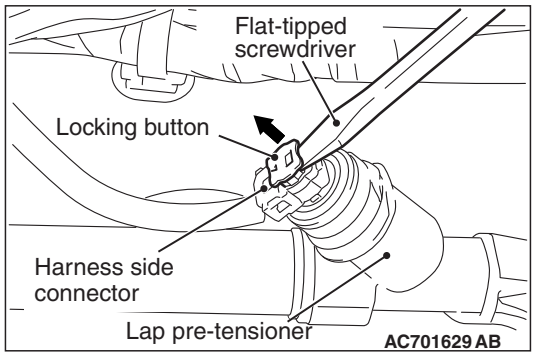

⚠ **CAUTION**

Insert an insulator such as a cable tie to a depth of 4mm (0.16 inch) or more, otherwise the short spring will not be released.

(4) Insert a cable tie [3 mm (0.12 inch) wide, 0.5 mm (0.02 inch) thick] between terminals 35, 36 and the short spring to release the short spring.

(5) Connect the negative battery terminal.

(6) Ignition switch: "ON".

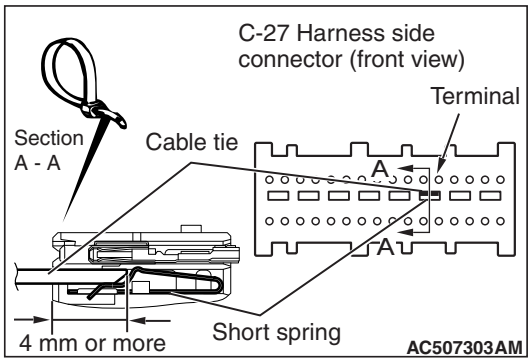

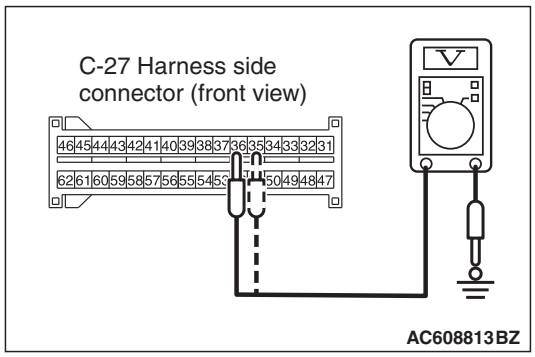

(7) Measure the voltage between C-27 harness side connector terminals 35, 36 and body ground.
Voltage should measure 1 volt or less.

Q: Is the measured voltage within the specified range?

YES : Erase the diagnostic trouble code memory, and check the diagnostic trouble code. If DTC B1C34 sets, replace the SRS-ECU (Refer to P.52B-440). Then go to Step 6.

NO : Go to Step 5.

STEP 5. Check the harness wires for short circuit to power supply between SRS-ECU connector C-27 (terminal No.35 and 36) and lap pre-tensioner connector D-24 (terminal No.2 and 1).

Q: Is the check result normal?

YES : Go to Step 6.

NO : Repair the harness wires between SRS-ECU connector C-27 and lap pre-tensioner connector D-24. Then go to Step 6.

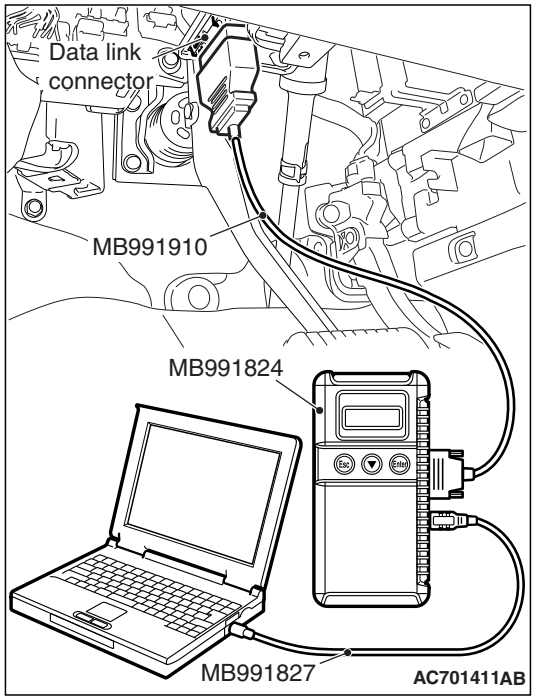

STEP 6. Recheck for diagnostic trouble code.

Check again if the DTC is set.

(1) Erase the DTC.
(2) Turn the ignition switch to the "ON" position.
(3) Check if the DTC is set.
(4) Turn the ignition switch to the "LOCK" (OFF) position.

Q: Is DTC B1C34 set?

YES : Return to Step 1.

NO : The procedure is complete.

DTC B1C35: Driver's Lap Pre-tensioner (Squib) System (Squib Circuit Open)

Driver's Lap pre-tensioner (Squib) Circuit

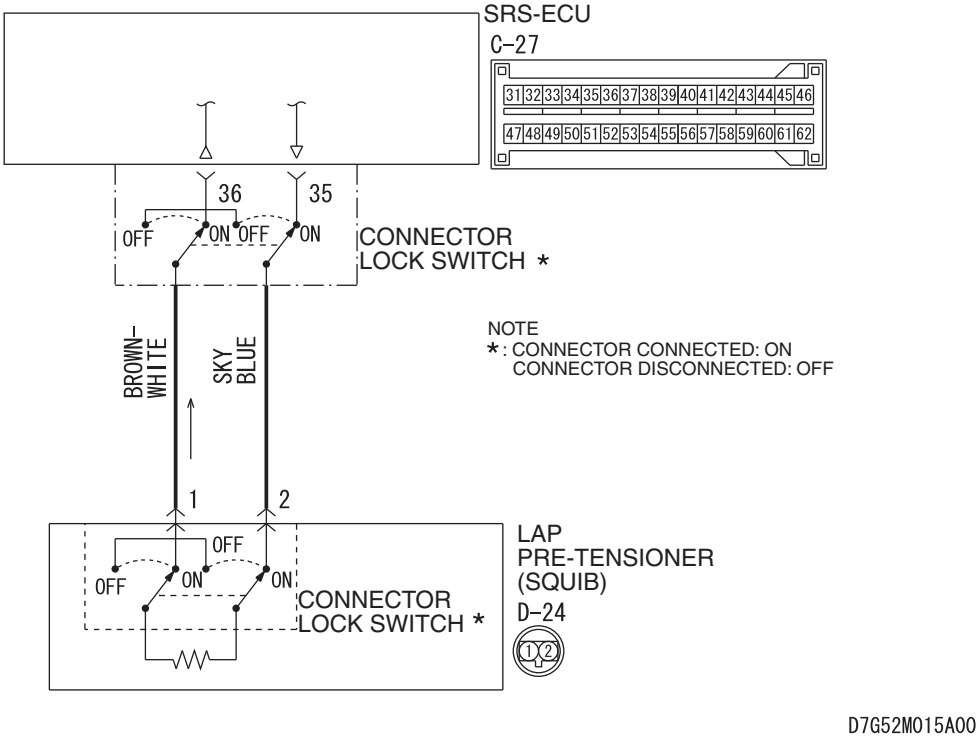

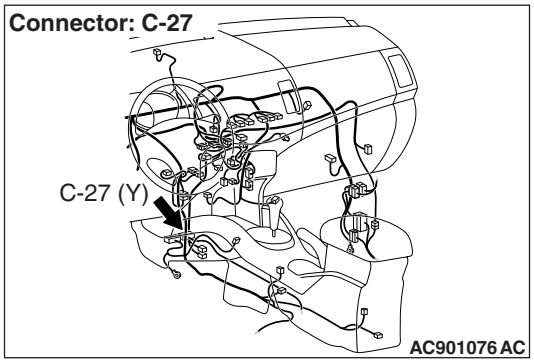

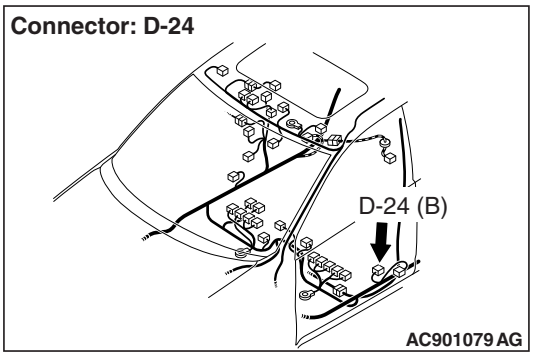

⚠ CAUTION

If DTC B1C35 is set in the SRS-ECU, always diagnose the CAN main bus line.

CIRCUIT OPERATION

The SRS-ECU judges how severe a collision is by detecting signals from the front impact sensors and the front air bag analog G-sensor. If the impact is over a predetermined level, the SRS-ECU sends an ignition signal. At this time, if the front air bag safing G-sensor is on, the lap pre-tensioner will deploy.

DTC SET CONDITIONS

This DTC is set if there is abnormal resistance between the input terminals of the lap pre-tensioner (squib).

TROUBLESHOOTING HITS

- Improper connector contact
- Open circuit in the lap pre-tensioner (squib) circuit
- Malfunction of the SRS-ECU

DIAGNOSIS

Required Special Tools:

- MB991958: Scan Tool (M.U.T.-III Sub Assembly)
  - MB991824: Vehicle Communication Interface (V.C.I.)
  - MB991827: M.U.T.-III USB Cable
  - MB991910: M.U.T.-III Main Harness A (Vehicles with CAN Communication System)
- MB991865: Dummy resistor
- MB991884: Resister harness

STEP 1. Using scan tool MB991958, diagnose the CAN bus line.

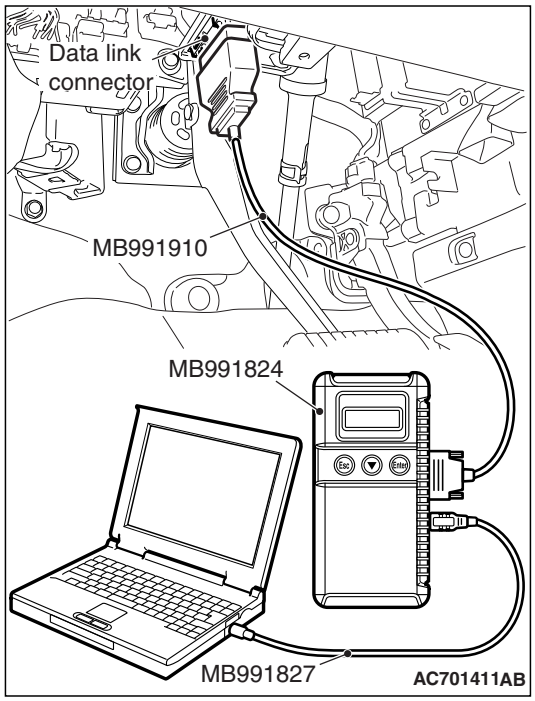

⚠ CAUTION

To prevent damage to scan tool MB991958, always turn the ignition switch to the "LOCK" (OFF) position before connecting or disconnecting scan tool MB991958.

(1) Connect scan tool MB991958. Refer to "How to connect the scan tool P.52B-28."
(2) Turn the ignition switch to the "ON" position.
(3) Diagnose the CAN bus line.
(4) Turn the ignition switch to the "LOCK" (OFF) position.

Q: Is the CAN bus line found to be normal?

YES : Go to Step 2.
NO : Repair the CAN bus line (Refer to GROUP 54C, Diagnosis P.54C-17).

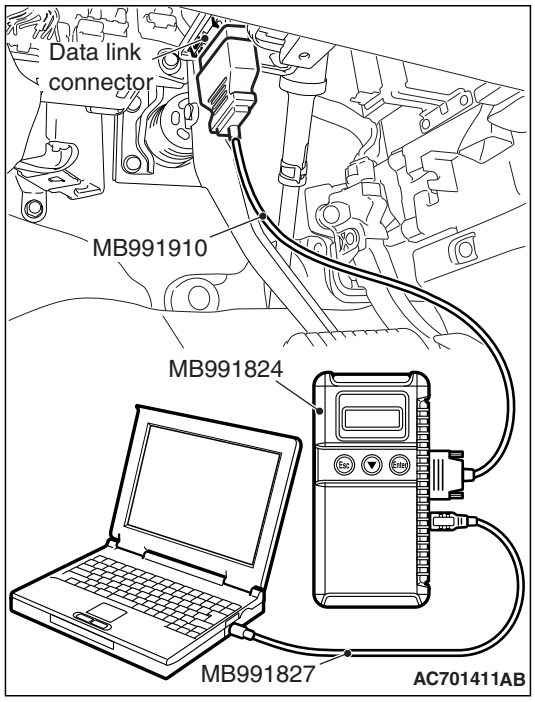

STEP 2. Recheck for diagnostic trouble code.

Check again if the DTC is set.

(1) Erase the DTC.
(2) Turn the ignition switch to the "ON" position.
(3) Check if the DTC is set.
(4) Turn the ignition switch to the "LOCK" (OFF) position.

Q: Is the DTC set?

YES : Go to Step 3.

NO : There is an intermittent malfunction such as poor engaged connector(s) or open circuit (Refer to GROUP 00, How to Cope with Intermittent Malfunction P.00-15).

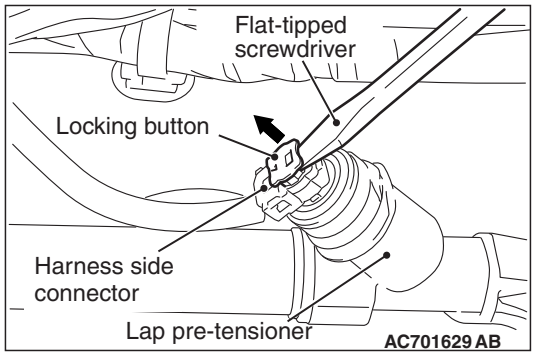

STEP 3. Check the lap pre-tensioner. (Using scan tool MB991958, read the diagnostic trouble code.)

(1) Disconnect the negative battery terminal.
(2) Disconnect lap pre-tensioner connector D-24. Use a flat-tipped screwdriver to unlock the locking button at the harness side connector by withdrawing it toward you in two stages, and then disconnect the connector.

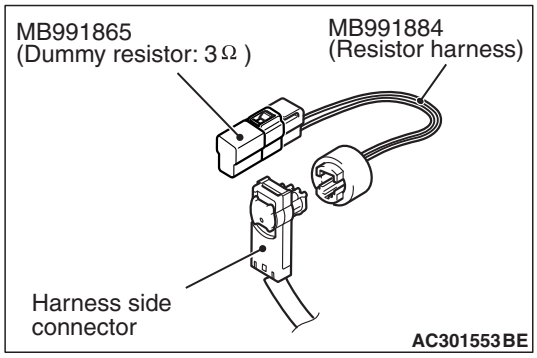

(3) Connect special tool MB991865 to special tool MB991884.
(4) Connect special tool MB991884 to the D-24 harness side connector.
(5) Connect the negative battery terminal.
(6) Erase diagnostic trouble code memory, and then check the diagnostic trouble code.

Q: Is DTC B1C35 set?

YES : Go to Step 4.

NO : Replace the driver's seat belt with pre-tensioner (Refer to P.52B-461). Then go to Step 5.

STEP 4. Check the harness for open circuit between SRS-ECU connector C-27 (terminal No.35 and 36) and the lap pre-tensioner D-24 (terminal No.2 and 1).

(1) Disconnect the negative battery terminal.

(2) While pushing the part "A" indicated in the figure of the harness side connector, turn the lock lever to the direction of the arrow to release the lock lever, and disconnect the C-27 SRS-ECU connector.

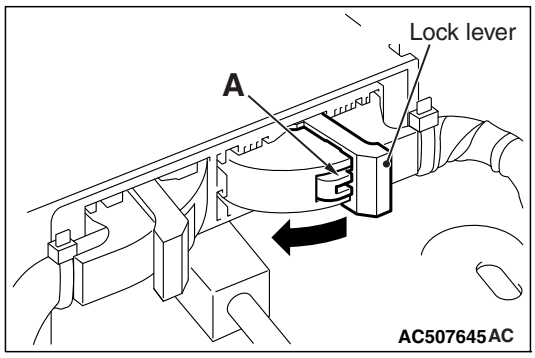

⚠ *DANGER*

To prevent the lap pre-tensioner from deploying unintentionally, disconnect the lap pre-tensioner connector D-24 to short the squib circuit.

(3) Disconnect SRS-ECU connector C-27 and lap pre-tensioner connector D-24, and measure at the wiring harness side. For connector D-24, use a flat-tipped screwdriver to unlock the locking button at the harness side connector by withdrawing it toward you in two stages, and then disconnect the connector.

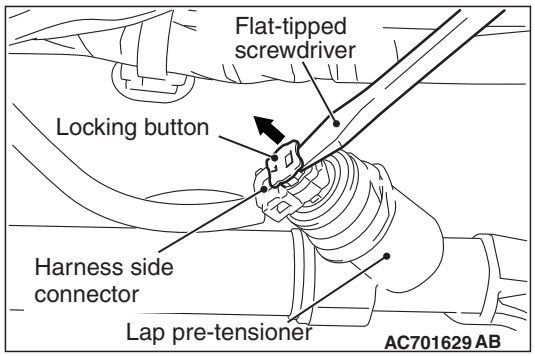

⚠ CAUTION

Insert an insulator such as a cable tie to a depth of 4mm (0.16 inch) or more, otherwise the short spring will not be released.

(4) Insert a cable tie [3 mm (0.12 inch) wide, 0.5 mm (0.02 inch) thick] between terminals 35, 36 and the short spring to release the short spring.

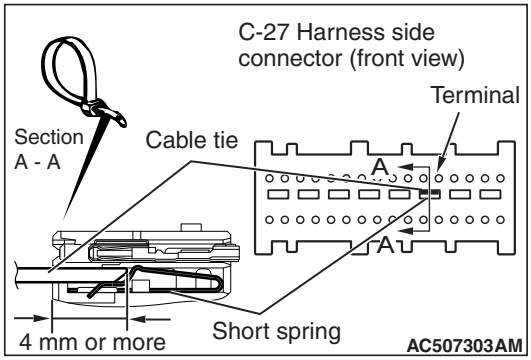

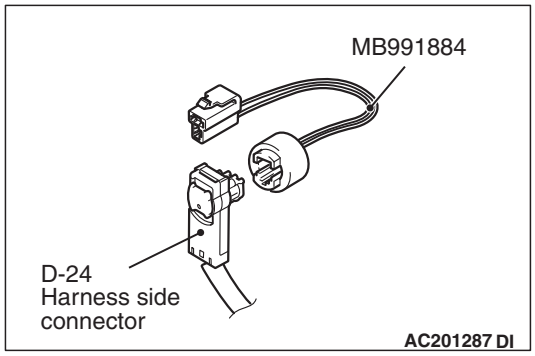

(5) Connect D-24 harness side connector to special tool MB991884.

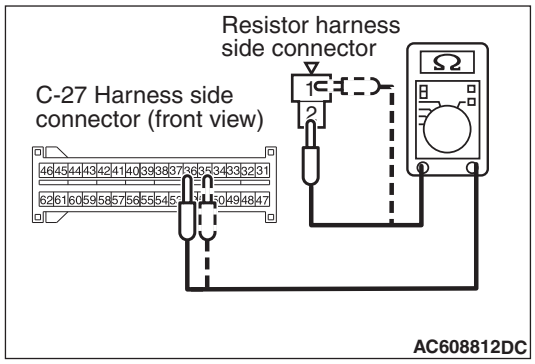

(6) Check for continuity between the following terminals. It should be less than 2 ohms.
- SRS-ECU connector C-27 (terminal No.35) and the special tool (terminal No.1)
- SRS-ECU connector C-27 (terminal No.36) and the special tool (terminal No.2)

Q: Does continuity exist?

YES : Erase the diagnostic trouble code memory, and recheck if any DTC set. If DTC B1C35 set, replace the SRS-ECU (Refer to P.52B-440). Then go to Step 5.

NO : Repair the harness wires between SRS-ECU connector C-27 and lap pre-tensioner connector D-24. Then go to Step 5.

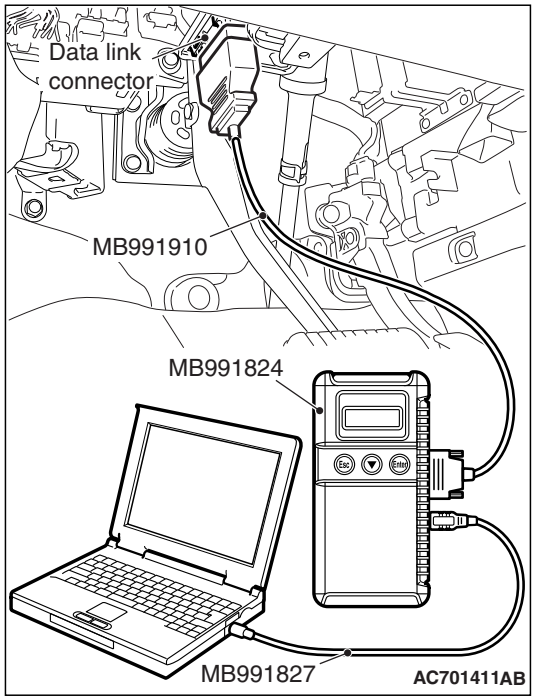

STEP 5. Recheck for diagnostic trouble code.

Check again if the DTC is set.

(1) Erase the DTC.
(2) Turn the ignition switch to the "ON" position.
(3) Check if the DTC is set.
(4) Turn the ignition switch to the "LOCK" (OFF) position.

Q: Is DTC B1C35 set?

YES : Return to Step 1.

NO : The procedure is complete.

DTC B1C36: Driver's Lap Pre-tensioner (Squib) System (Short Circuit between Squib Circuit Terminals)

Driver's Lap pre-tensioner (Squib) Circuit

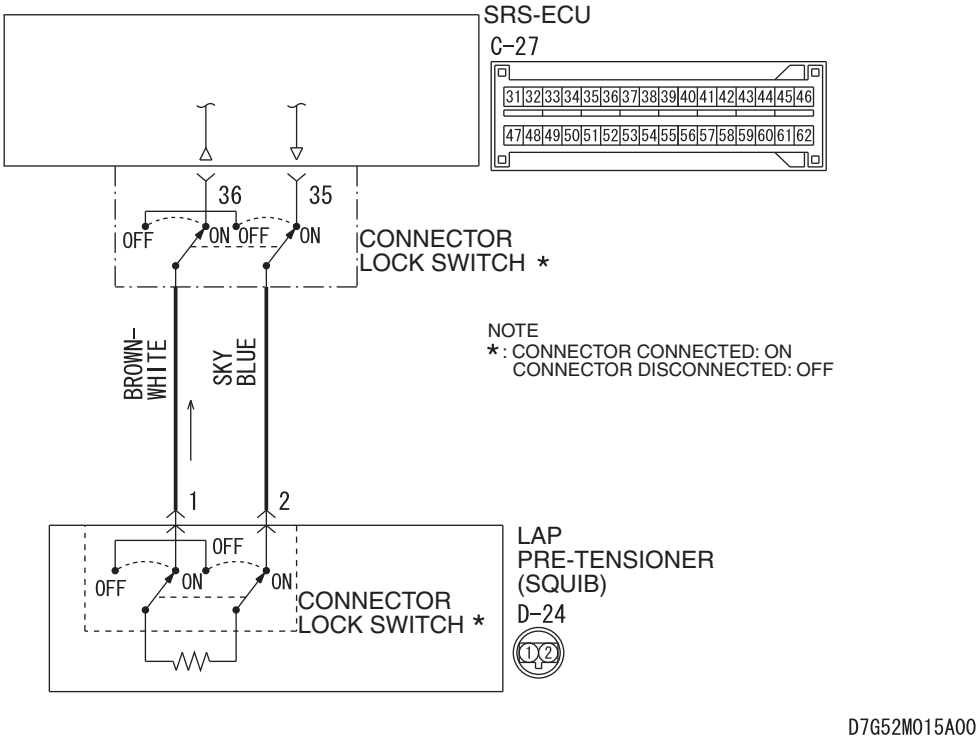

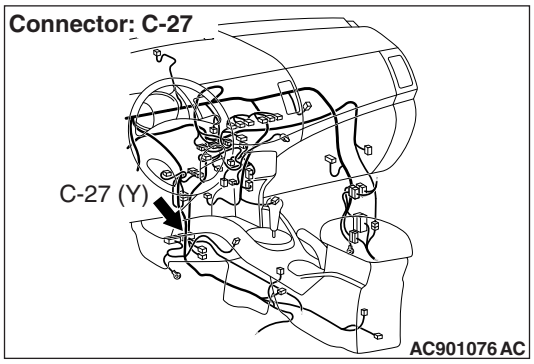

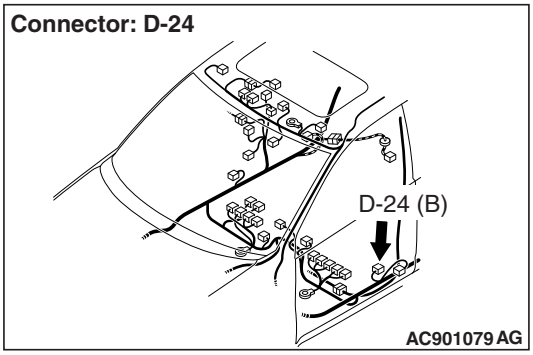

⚠ CAUTION

If DTC B1C36 is set in the SRS-ECU, always diagnose the CAN main bus line.

CIRCUIT OPERATION

The SRS-ECU judges how severe a collision is by detecting signals from the front impact sensors and the front air bag analog G-sensor. If the impact is over a predetermined level, the SRS-ECU sends an ignition signal. At this time, if the front air bag safing G-sensor is on, the lap pre-tensioner will deploy.

DTC SET CONDITIONS

This DTC is set if there is abnormal resistance between the input terminals of the lap pre-tensioner (squib).

TROUBLESHOOTING HITS

- Improper engaged connector or defective short spring*
- Short circuit between the lap pre-tensioner (squib) circuit terminals
- Damaged connector(s)

*NOTE: *: The squib circuit connectors integrate a "short" spring (which prevents the lap pre-tensioner from deploying unintentionally due to static electricity by shorting the positive wire to the ground wire in the squib circuit when the connectors are disconnected) (Refer to P.52B-3). Therefore, if connector C-27 or D-24 is damaged or improperly engaged, the short spring may not be released when the connector is connected.*

DIAGNOSIS

Required Special Tools:

- MB991958: Scan Tool (M.U.T.-III Sub Assembly)
  - MB991824: Vehicle Communication Interface (V.C.I.)
  - MB991827: M.U.T.-III USB Cable
  - MB991910: M.U.T.-III Main Harness A (Vehicles with CAN Communication System)
- MB991865: Dummy resistor
- MB991884: Resister harness

STEP 1. Using scan tool MB991958, diagnose the CAN bus line.

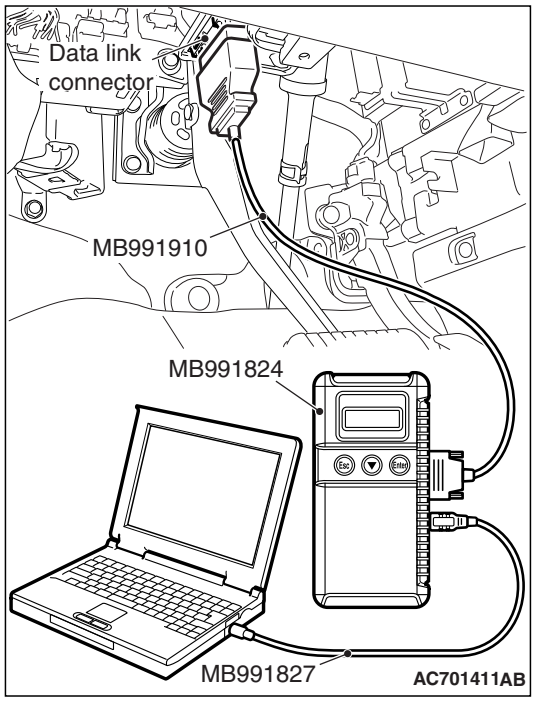

⚠ CAUTION

To prevent damage to scan tool MB991958, always turn the ignition switch to the "LOCK" (OFF) position before connecting or disconnecting scan tool MB991958.

(1) Connect scan tool MB991958. Refer to "How to connect the scan tool P.52B-28."
(2) Turn the ignition switch to the "ON" position.
(3) Diagnose the CAN bus line.
(4) Turn the ignition switch to the "LOCK" (OFF) position.

Q: Is the CAN bus line found to be normal?

YES : Go to Step 2 .
NO : Repair the CAN bus line (Refer to GROUP 54C, Diagnosis P.54C-17).

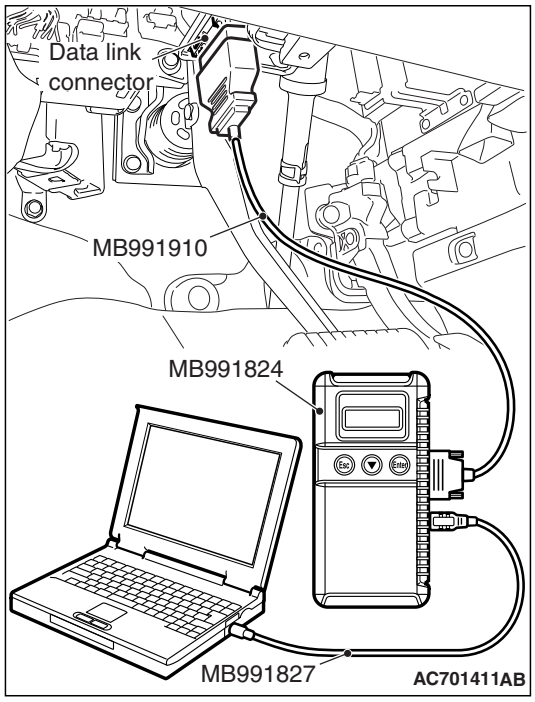

STEP 2. Recheck for diagnostic trouble code.

Check again if the DTC is set.

(1) Erase the DTC.
(2) Turn the ignition switch to "ON" position.
(3) Check if the DTC is set.
(4) Turn the ignition switch to the "LOCK" (OFF) position.

Q: Is the DTC set?

YES : Go to Step 3 .

NO : There is an intermittent malfunction such as poor engaged connector(s) or open circuit (Refer to GROUP 00, How to Cope with Intermittent Malfunction P.00-15).

STEP 3. Check SRS-ECU connector C-27 and lap pre-tensioner connector D-24. (Using scan tool MB991958, read the diagnostic trouble code.)

(1) Disconnect the negative battery terminal.
(2) While pushing the part "A" indicated in the figure of the harness side connector, turn the lock lever to the direction of the arrow to release the lock lever, and disconnect the C-27 SRS-ECU connector. Then connect the connector.

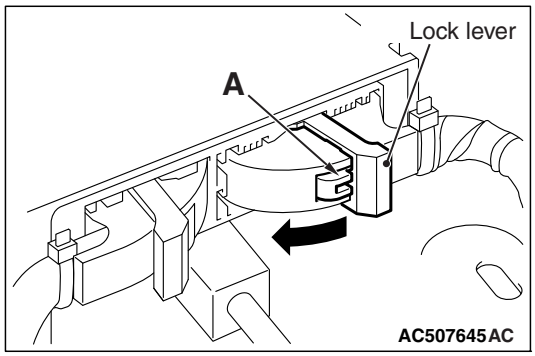

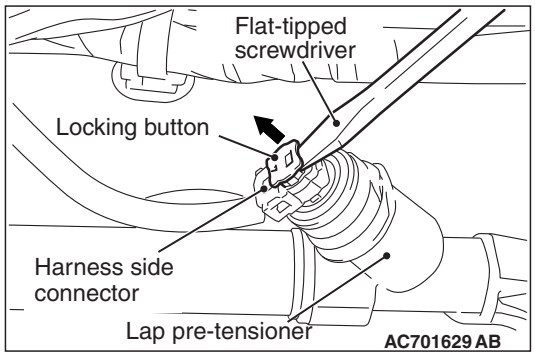

(3) After disconnecting the D-24 harness side connectors, connect the connectors again. For the D-24 connector disconnection, use a flat-tipped screwdriver to unlock the locking button at the harness side connector by withdrawing it toward you in two stages, and then disconnect the connector.
(4) Connector the negative battery terminal.
(5) Erase the diagnostic trouble code memory, and check the diagnostic trouble code.

Q: Is DTC B1C36 set?

YES : Go to Step 4.

NO : The procedure is complete. It is assumed that DTC B1C36 set because connector C-27 or D-24 was engaged improperly.

STEP 4. Check the lap pre-tensioner. (Using scan tool MB991958, read the diagnostic trouble code.)

(1) Disconnect the negative battery terminal.

(2) While pushing the part "A" indicated in the figure of the harness side connector, turn the lock lever to the direction of the arrow to release the lock lever, and disconnect the C-27 SRS-ECU connector.

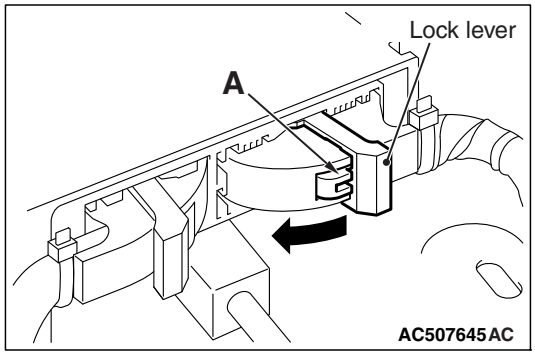

(3) Disconnect lap pre-tensioner connector D-24. Use a flat-tipped screwdriver to unlock the locking button at the harness side connector by withdrawing it toward you in two stages, and then disconnect the connector.

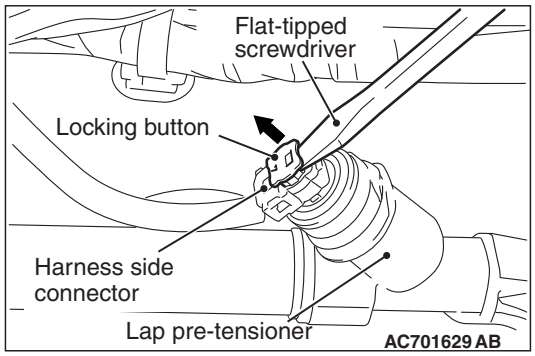

(4) Connect special tool MB991865 to special tool MB991884.

(5) Connect special tool MB991884 to the D-24 harness side connector.

(6) Connect the negative battery terminal.

(7) Erase diagnostic trouble code memory, and then check the diagnostic trouble code.

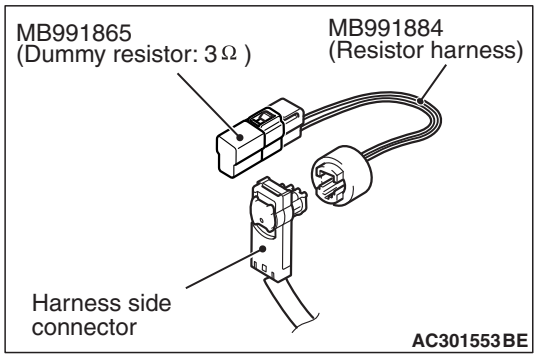

Q: Is DTC B1C36 set?

YES : Go to Step 5.

NO : Replace the driver's seat belt with pre-tensioner. (Refer to P.52B-461). Then go to Step 7.

STEP 5. Check the lap pre-tensioner circuit. Measure the resistance at the SRS-ECU connector C-27.

(1) Disconnect the negative battery terminal.

(2) While pushing the part "A" indicated in the figure of the harness side connector, turn the lock lever to the direction of the arrow to release the lock lever, and disconnect the C-27 SRS-ECU connector.

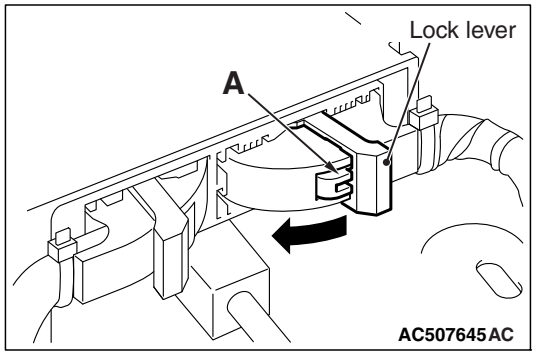

⚠ DANGER

To prevent the lap pre-tensioner from deploying unintentionally, disconnect the lap pre-tensioner connector D-24 to short the squib circuit.

(3) Disconnect lap pre-tensioner connector D-24. Use a flat-tipped screwdriver to unlock the locking button at the harness side connector by withdrawing it toward you in two stages, and then disconnect the connector.

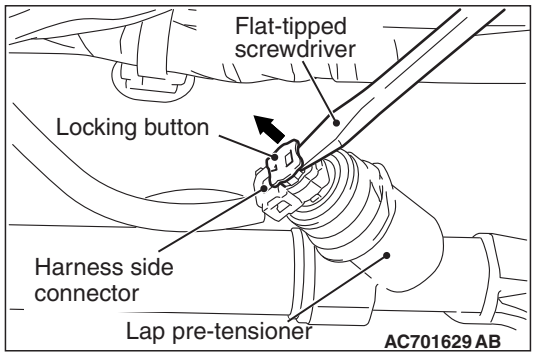

⚠ CAUTION

Insert an insulator such as a cable tie to a depth of 4mm (0.16 inch) or more, otherwise the short spring will not be released.

(4) Insert a cable tie [3 mm (0.12 inch) wide, 0.5 mm (0.02 inch) thick] between terminals 35, 36 and the short spring to release the short spring.

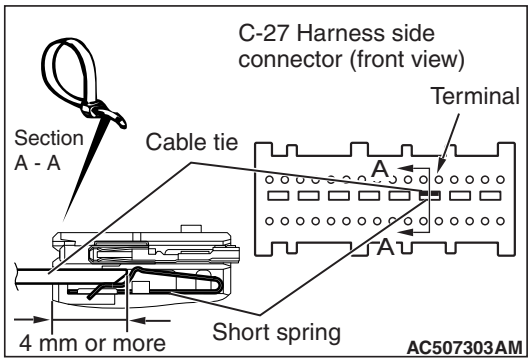

(5) Check for continuity between C-27 harness side connector terminals 35 and 36.
It should be an open circuit.

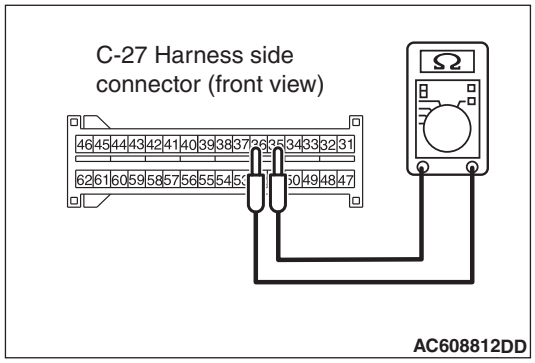

Q: Is it open circuit?

YES : Erase the diagnostic trouble code memory, and check the diagnostic trouble code. If DTC B1C36 sets, replace the SRS-ECU (Refer to P.52B-440). Then go to Step 7.

NO : Go to Step 6.

STEP 6. Check the harness for short circuit between SRS-ECU connector C-27 (terminal No.35 and 36) and lap pre-tensioner connector D-24 (terminal No.2 and 1).

Q: Is the check result normal?

YES : Go to Step 7.

NO : Repair the harness wires between SRS-ECU connector C-27 and lap pre-tensioner connector D-24. Then go to Step 7.

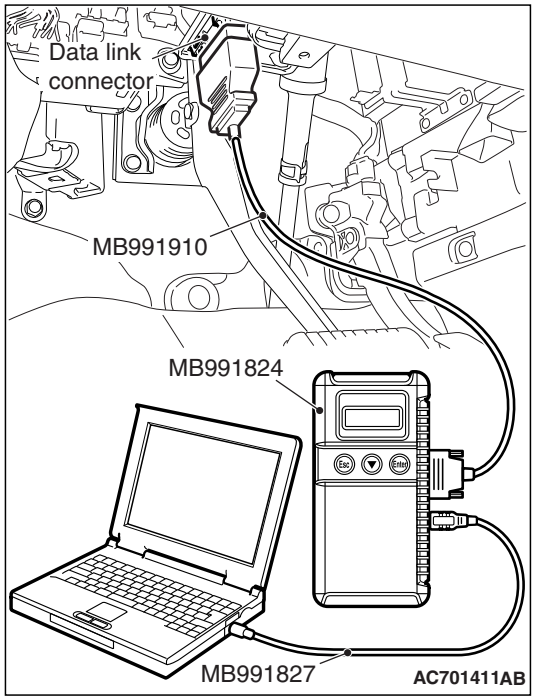

STEP 7. Recheck for diagnostic trouble code.

Check again if the DTC is set.

(1) Erase the DTC.
(2) Turn the ignition switch to the "ON" position.
(3) Check if the DTC is set.
(4) Turn the ignition switch to the "LOCK" (OFF) position.

Q: Is DTC B1C36 set?

YES : Return to Step 1.

NO : The procedure is complete.

DTC B1C38 Driver's Seat Belt Pre-tensioner (squib) System (Shorted to Squib Circuit Ground)

Seat Belt Pre-Tensioner (Driver's side) (Squib) Circuit

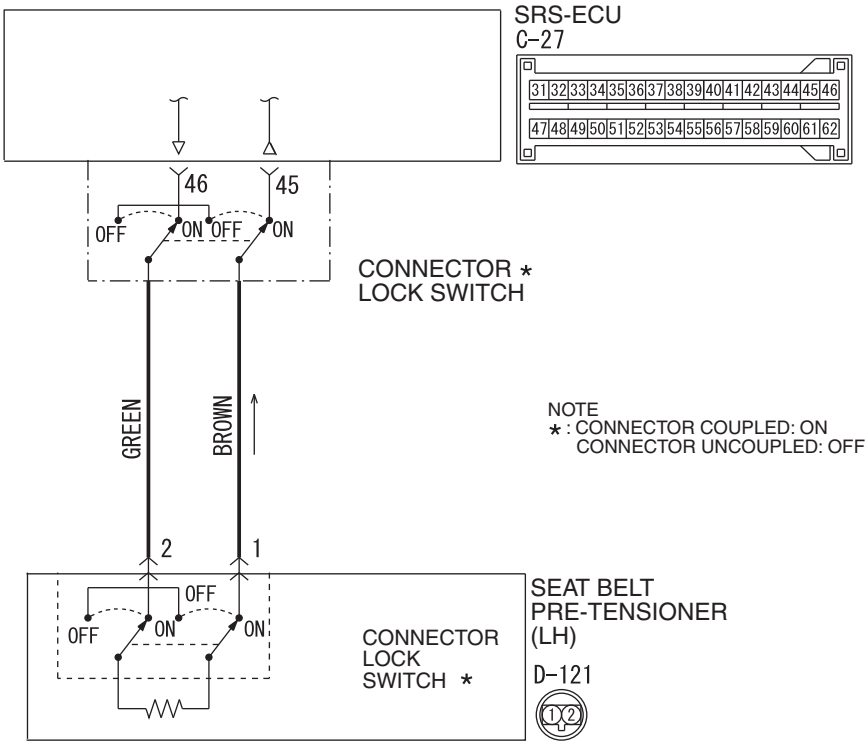

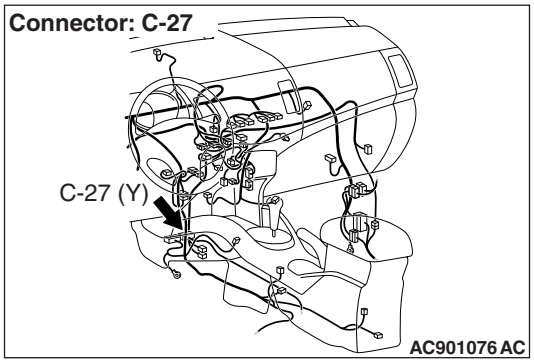

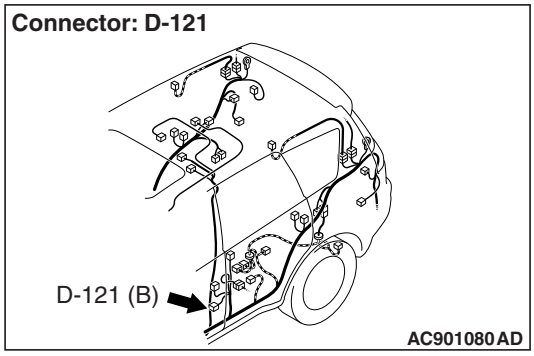

⚠ CAUTION

If DTC B1C38 is set in the SRS-ECU, always diagnose the CAN main bus line.

CIRCUIT OPERATION

The SRS-ECU judges how severe a collision is by detecting signals from the front impact sensors and the front air bag analog G-sensor. If the impact is over a predetermined level, the SRS-ECU sends an ignition signal. At this time, if the front air bag safing G-sensor is on, the pre-tensioner will deploy.

DTC SET CONDITIONS

This DTC is set if there is abnormal resistance between the input terminals of the driver's seat belt pre-tensioner (squib).

TROUBLESHOOTING HITS

- Damaged wiring harnesses or connectors
- Short to the ground in the driver's seat belt pre-tensioner (squib) harness
- Malfunction of the SRS-ECU

DIAGNOSIS

Required Special Tools:

- MB991958: Scan Tool (M.U.T.-III Sub Assembly)
  - MB991824: Vehicle Communication Interface (V.C.I.)
  - MB991827: M.U.T.-III USB Cable
  - MB991910: M.U.T.-III Main Harness A (Vehicles with CAN Communication System)
- MB991865: Dummy resistor
- MB991884: Resister harness

STEP 1. Using scan tool MB991958, diagnose the CAN bus line.

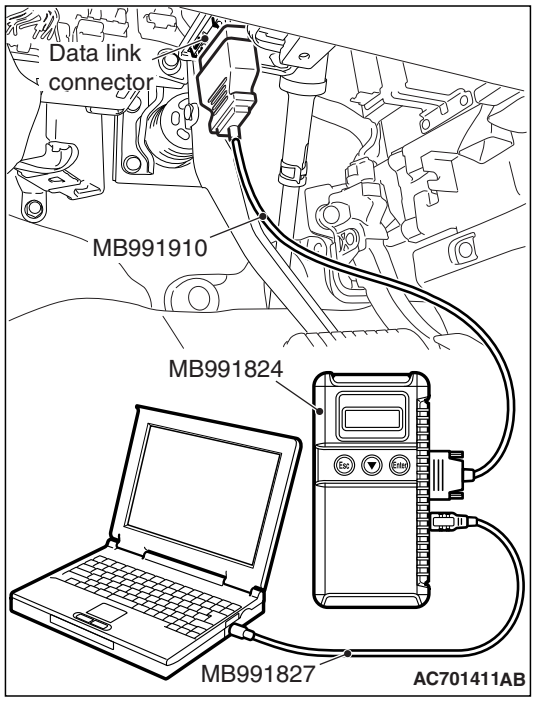

⚠ CAUTION

To prevent damage to scan tool MB991958, always turn the ignition switch to the "LOCK" (OFF) position before connecting or disconnecting scan tool MB991958.

(1) Connect scan tool MB991958. Refer to "How to connect the scan tool P.52B-28."
(2) Turn the ignition switch to the "ON" position.
(3) Diagnose the CAN bus line.
(4) Turn the ignition switch to the "LOCK" (OFF) position.

Q: Is the CAN bus line found to be normal?

YES : Go to Step 2.
NO : Repair the CAN bus line (Refer to GROUP 54C, Diagnosis P.54C-17).

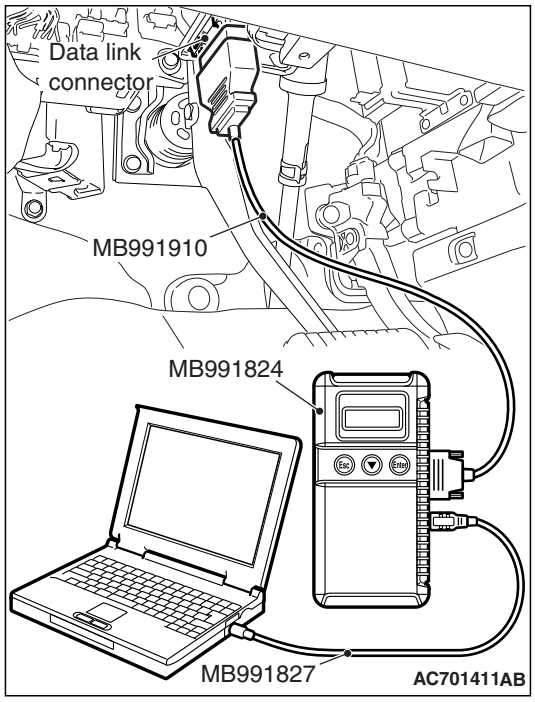

STEP 2. Recheck for diagnostic trouble code.

Check again if the DTC is set.

(1) Erase the DTC.
(2) Turn the ignition switch to the "ON" position.
(3) Check if the DTC is set.
(4) Turn the ignition switch to the "LOCK" (OFF) position.

Q: Is the DTC set?

YES : Go to Step 3.

NO : There is an intermittent malfunction such as poor engaged connector(s) or open circuit (Refer to GROUP 00, How to Cope with Intermittent Malfunction P.00-15).

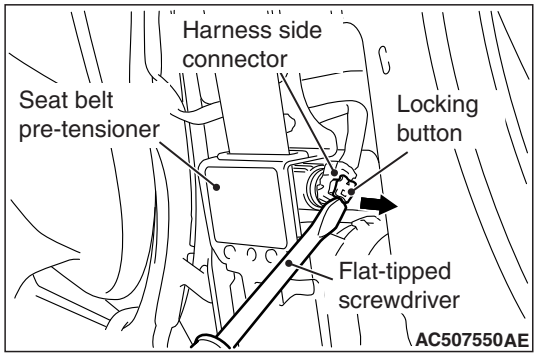

STEP 3. Check the driver's seat belt pre-tensioner. (Using scan tool MB991958, read the diagnostic trouble code.)

(1) Disconnect the negative battery terminal.
(2) Disconnect driver's seat belt pre-tensioner connector D-121. Use a flat-tipped screwdriver to unlock the locking button at the harness side connector by withdrawing it toward you in two stages, and then disconnect the connector.

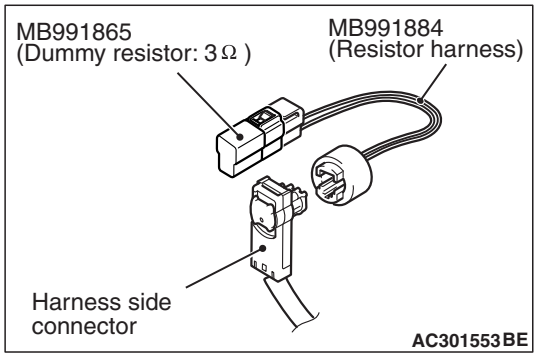

(3) Connect special tool MB991865 to special tool MB991884.
(4) Connect special tool MB991884 to the D-121 harness side connector.
(5) Connect the negative battery terminal.
(6) Erase diagnostic trouble code memory, and check the diagnostic trouble code.

Q: Is DTC B1C38 set?

YES : Go to Step 4.

NO : Replace the driver's seat belt with pre-tensioner. Refer to P.52B-461. Then go to Step 6.

STEP 4. Check the driver's seat belt pre-tensioner circuit. Measure the resistance at the SRS-ECU connector C-27.

(1) Disconnect the negative battery terminal.

(2) While pushing the part "A" indicated in the figure of the harness side connector, turn the lock lever to the direction of the arrow to release the lock lever, and disconnect the C-27 SRS-ECU connector.

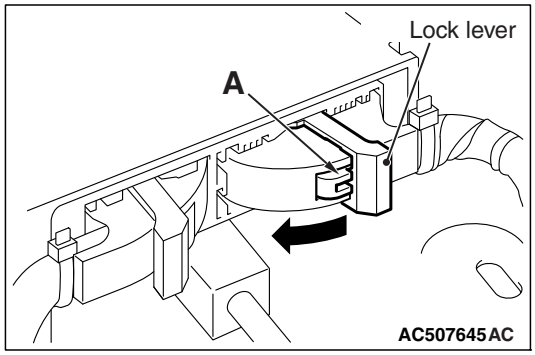

⚠ ***DANGER***

To prevent the seat belt pre-tensioner from deploying unintentionally, disconnect the driver's seat belt pre-tensioner connector D-121 to short the squib circuit.

(3) Disconnect driver's seat belt pre-tensioner connector D-121. Use a flat-tipped screwdriver to unlock the locking button at the harness side connector by withdrawing it toward you in two stages, and then disconnect the connector.

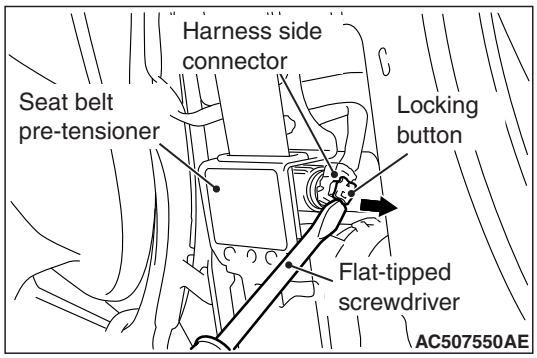

⚠ **CAUTION**

Insert an insulator such as a cable tie to a depth of 4mm (0.16 inch) or more, otherwise the short spring will not be released.

(4) Insert a cable tie [3 mm (0.12 inch) wide, 0.5 mm (0.02 inch) thick] between terminals 45, 46 and the short spring to release the short spring.

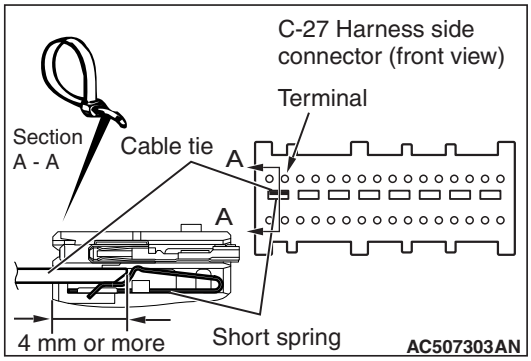

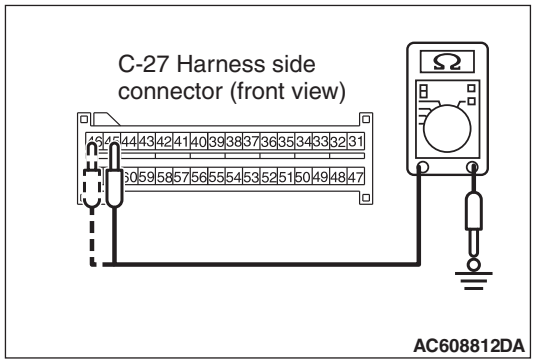

(5) Check for continuity between C-27 harness side connector terminals 45, 46 and body ground.
It should be an open circuit.

Q: Is it open circuit?

YES : Erase the diagnostic trouble code memory, and check the diagnostic trouble code. If DTC B1C38 sets, replace the SRS-ECU (Refer to P.52B-440). Then go to Step 6.

NO : Go to Step 5.

STEP 5. Check harness wires for short circuit to ground between SRS-ECU connector C-27 (terminal No.45 and 46) and driver's seat belt pre-tensioner connector D-121 (terminal No.1 and 2).

Q: Is the check result normal?

YES : Go to Step 6.

NO : Repair the harness wires between SRS-ECU connector C-27 and driver's seat belt pre-tensioner connector D-121. Then go to Step 6.

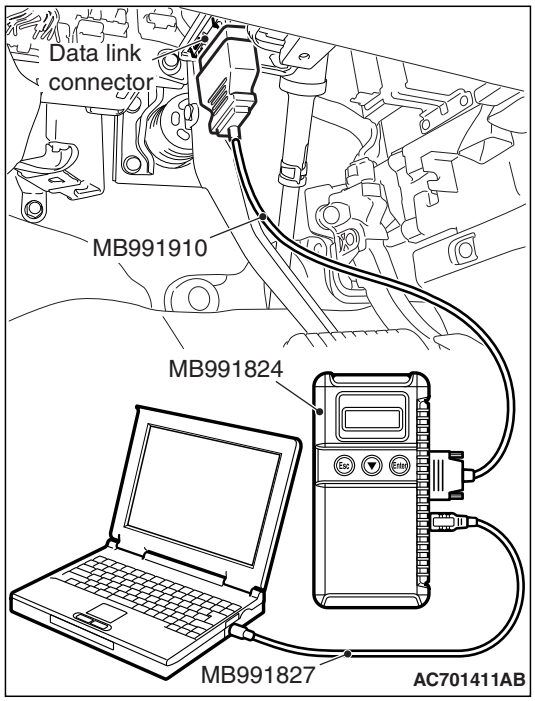

STEP 6. Recheck for diagnostic trouble code.

Check again if the DTC is set.

(1) Erase the DTC.
(2) Turn the ignition switch to the "ON" position.
(3) Check if the DTC is set.
(4) Turn the ignition switch to the "LOCK" (OFF) position.

Q: Is DTC B1C38 set?

YES : Return to Step 1.

NO : The procedure is complete.

DTC B1C39: Driver's Seat Belt Pre-tensioner (Squib) System (Shorted to Squib Circuit Power Supply)

Seat Belt Pre-Tensioner (Driver's side) (Squib) Circuit

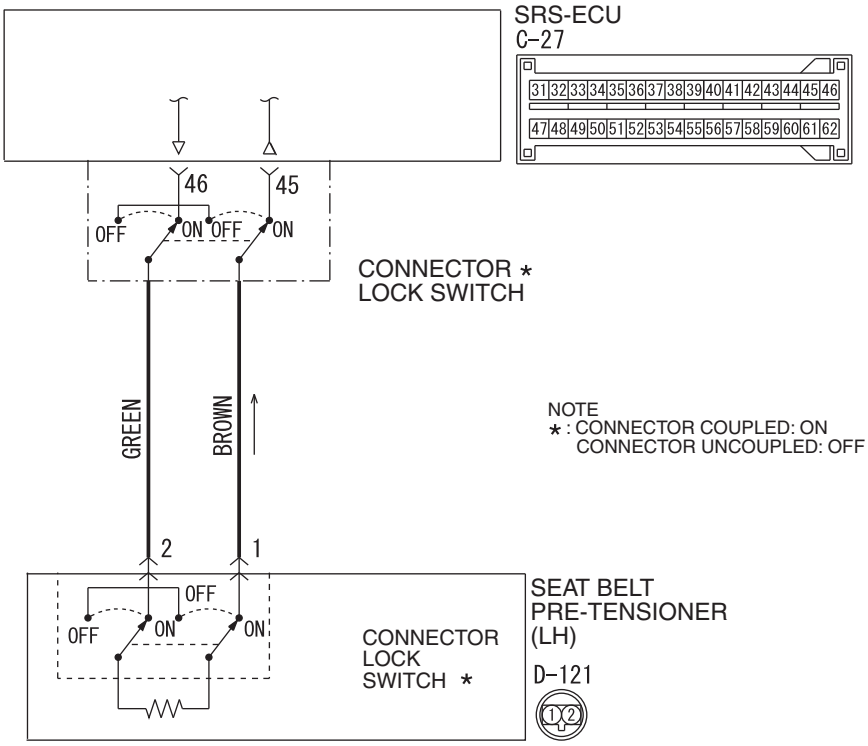

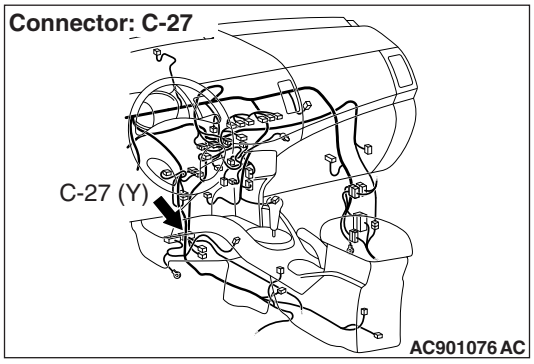

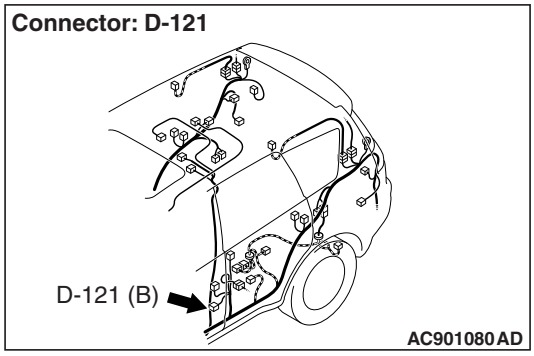

⚠ CAUTION

If DTC B1C39 is set in the SRS-ECU, always diagnose the CAN main bus line.

CIRCUIT OPERATION

The SRS-ECU judges how severe a collision is by detecting signals from the front impact sensors and the front air bag analog G-sensor. If the impact is over a predetermined level, the SRS-ECU sends an ignition signal. At this time, if the front air bag safing G-sensor is on, the pre-tensioner will deploy.

DTC SET CONDITIONS

This DTC is set if there is abnormal resistance between the input terminals of the driver's seat belt pre-tensioner (squib).

TROUBLESHOOTING HITS

- Damaged wiring harnesses or connectors
- Short to the power supply in the driver's seat belt pre-tensioner (squib) harness
- Malfunction of the SRS-ECU

DIAGNOSIS

Required Special Tools:

- MB991958: Scan Tool (M.U.T.-III Sub Assembly)
  - MB991824: Vehicle Communication Interface (V.C.I.)
  - MB991827: M.U.T.-III USB Cable
  - MB991910: M.U.T.-III Main Harness A (Vehicles with CAN Communication System)
- MB991865: Dummy resistor
- MB991884: Resister harness

STEP 1. Using scan tool MB991958, diagnose the CAN bus line.

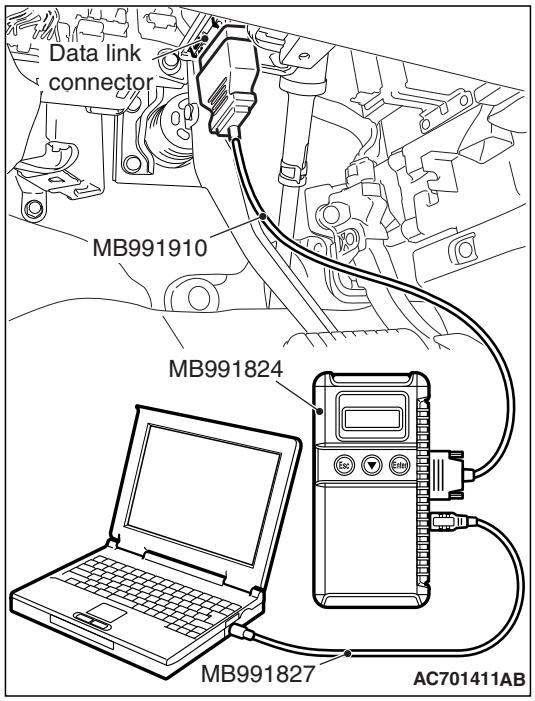

⚠ CAUTION

To prevent damage to scan tool MB991958, always turn the ignition switch to the "LOCK" (OFF) position before connecting or disconnecting scan tool MB991958.

(1) Connect scan tool MB991958. Refer to "How to connect the scan tool P.52B-28."
(2) Turn the ignition switch to the "ON" position.
(3) Diagnose the CAN bus line.
(4) Turn the ignition switch to the "LOCK" (OFF) position.

Q: Is the CAN bus line found to be normal?

YES : Go to Step 2.
NO : Repair the CAN bus line (Refer to GROUP 54C, Diagnosis P.54C-17).

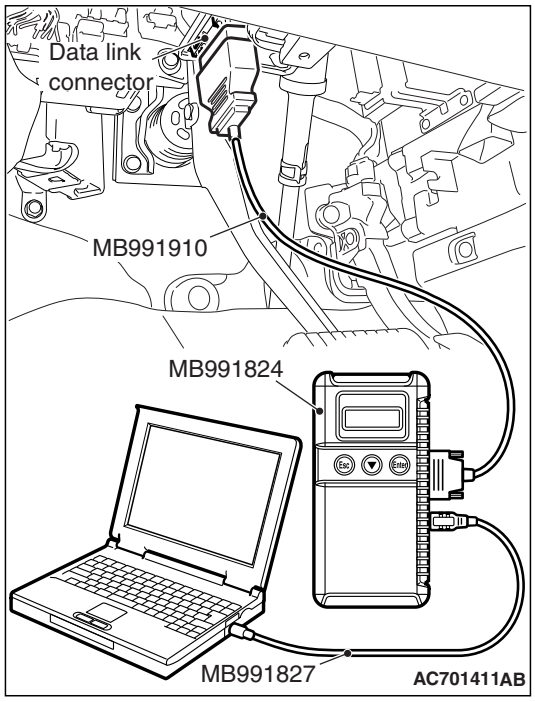

STEP 2. Recheck for diagnostic trouble code.

Check again if the DTC is set.

(1) Erase the DTC.
(2) Turn the ignition switch to "ON" position.
(3) Check if the DTC is set.
(4) Turn the ignition switch to the "LOCK" (OFF) position.

Q: Is the DTC set?

YES : Go to Step 3.
NO : Go to Step 6.

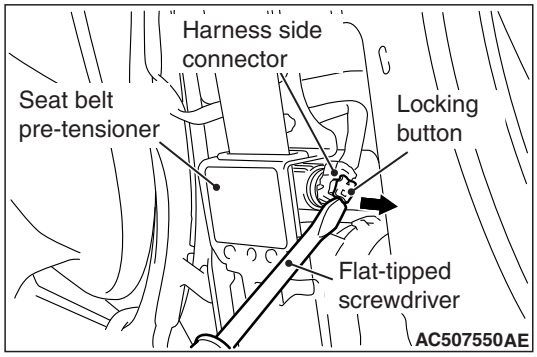

STEP 3. Check the driver's seat belt pre-tensioner. (Using scan tool MB991958, read the diagnostic trouble code.)

(1) Disconnect the negative battery terminal.
(2) Disconnect driver's seat belt pre-tensioner connector D-121. Use a flat-tipped screwdriver to unlock the locking button at the harness side connector by withdrawing it toward you in two stages, and then disconnect the connector.

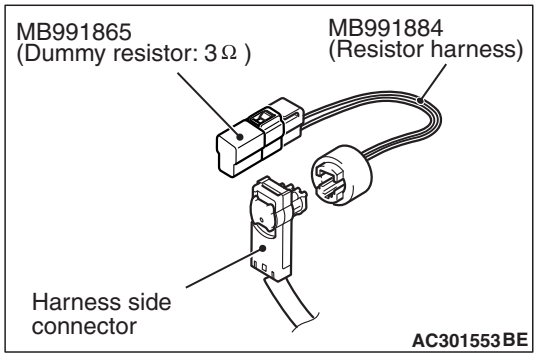

(3) Connect special tool MB991865 to special tool MB991884.
(4) Connect special tool MB991884 to the D-121 harness side connector.
(5) Connect the negative battery terminal.
(6) Erase diagnostic trouble code memory, and check the diagnostic trouble code.

Q: Is DTC B1C39 set?

YES : Go to Step 4.
NO : Replace the driver's seat belt with pre-tensioner. (Refer to P.52B-461). Then go to Step 6.

STEP 4. Check the driver's seat belt pre-tensioner circuit. Measure the voltage at the SRS-ECU connector C-27.

(1) Disconnect the negative battery terminal.
(2) While pushing the part "A" indicated in the figure of the harness side connector, turn the lock lever to the direction of the arrow to release the lock lever, and disconnect the C-27 SRS-ECU connector.

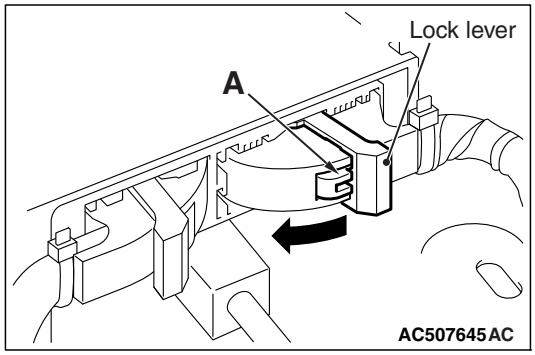

⚠ ***DANGER***

To prevent the seat belt pre-tensioner from deploying unintentionally, disconnect the driver's seat belt pre-tensioner connector D-121 to short the squib circuit.

(3) Disconnect driver's seat belt pre-tensioner connector D-121. Use a flat-tipped screwdriver to unlock the locking button at the harness side connector by withdrawing it toward you in two stages, and then disconnect the connector.

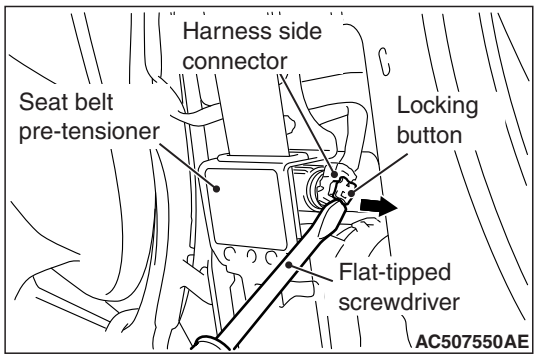

⚠ **CAUTION**

Insert an insulator such as a cable tie to a depth of 4mm (0.16 inch) or more, otherwise the short spring will not be released.

(4) Insert a cable tie [3 mm (0.12 inch) wide, 0.5 mm (0.02 inch) thick] between terminals 45, 46 and the short spring to release the short spring.
(5) Connect the negative battery terminal.
(6) Ignition switch: "ON".

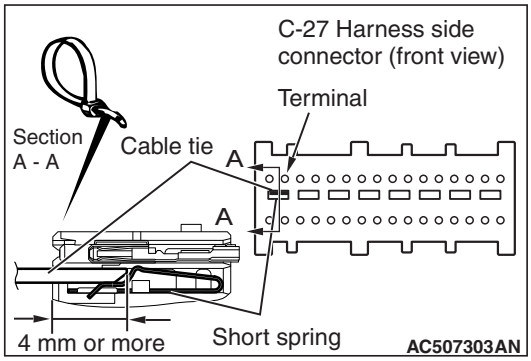

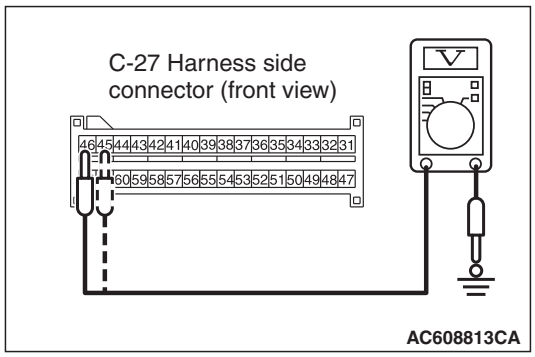

(7) Measure the voltage between C-27 harness side connector terminals 45, 46 and body ground.
Voltage should measure 1 volt or less.

Q: Is the measured voltage within the specified range?

YES : Erase the diagnostic trouble code memory, and check the diagnostic trouble code. If DTC B1C39 sets, replace the SRS-ECU (Refer to P.52B-440). Then go to Step 6.

NO : Go to Step 5.

STEP 5. Check the harness wires for short circuit to power supply between SRS-ECU connector C-27 (terminal No.45 and 46) and driver's seat belt pre-tensioner connector D-121 (terminal No.1 and 2).

Q: Is the check result normal?

YES : Go to Step 6.

NO : Repair the harness wires between SRS-ECU connector C-27 and driver's seat belt pre-tensioner connector D-121. Then go to Step 6.

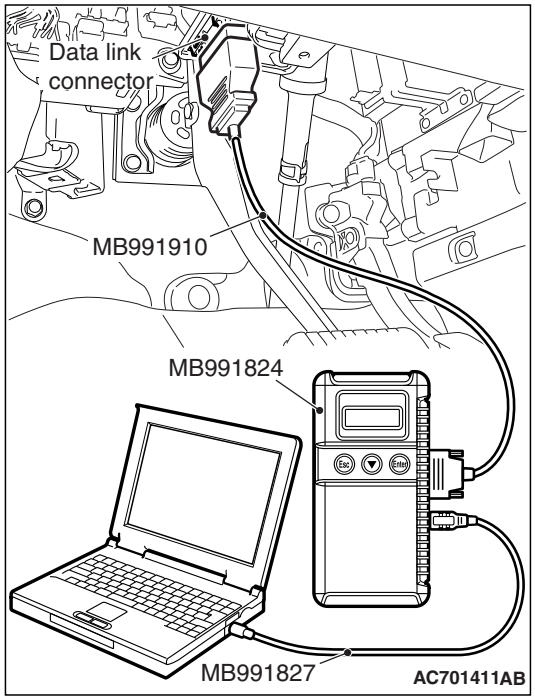

STEP 6. Recheck for diagnostic trouble code.

Check again if the DTC is set.

(1) Erase the DTC.
(2) Turn the ignition switch to the "ON" position.
(3) Check if the DTC is set.
(4) Turn the ignition switch to the "LOCK" (OFF) position.

Q: Is DTC B1C39 set?

YES : Return to Step 1.

NO : The procedure is complete.

DTC B1C3A: Driver's Seat Belt Pre-tensioner (Squib) System (Squib Circuit Open)

Seat Belt Pre-Tensioner (Driver's side) (Squib) Circuit

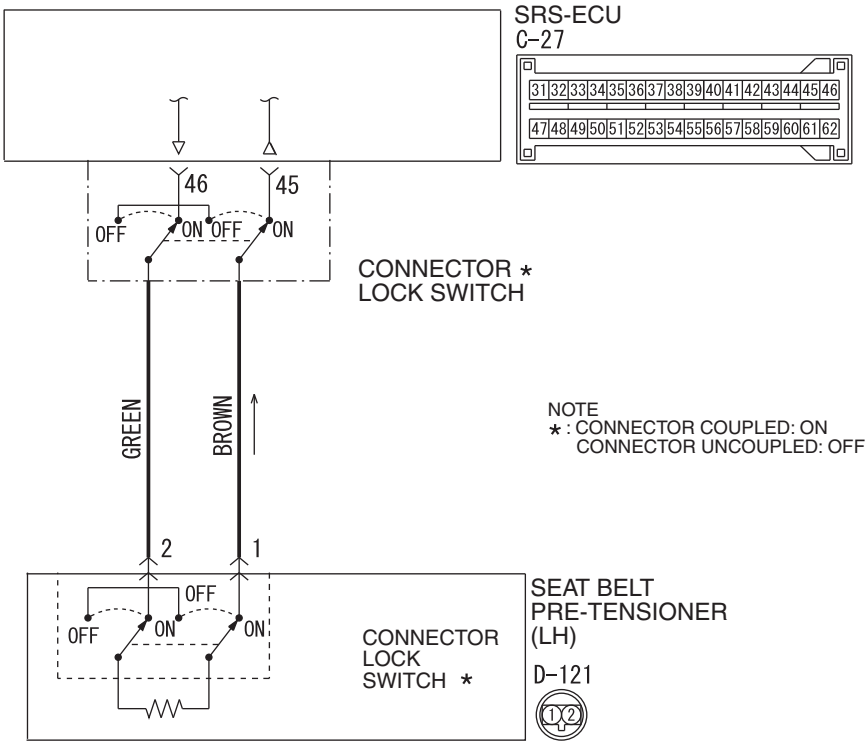

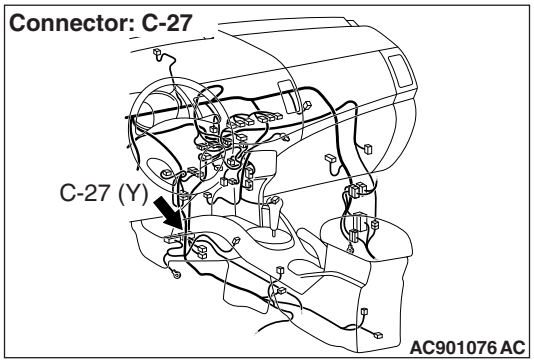

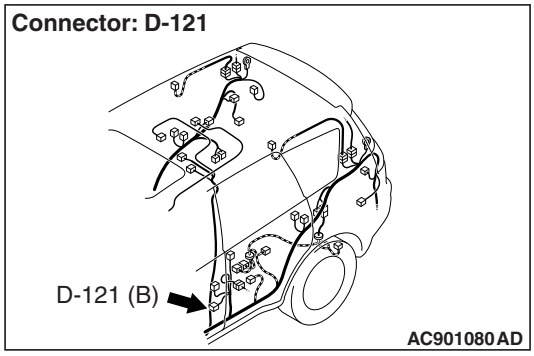

⚠ CAUTION

If DTC B1C3A is set in the SRS-ECU, always diagnose the CAN main bus line.

CIRCUIT OPERATION

The SRS-ECU judges how severe a collision is by detecting signals from the front impact sensors and the front air bag analog G-sensor. If the impact is over a predetermined level, the SRS-ECU sends an ignition signal. At this time, if the front air bag safing G-sensor is on, the pre-tensioner will deploy.

DTC SET CONDITIONS

This DTC is set if there is abnormal resistance between the input terminals of the driver's seat belt pre-tensioner (squib).

TROUBLESHOOTING HITS

- Improper connector contact
- Open circuit in the driver's seat belt pre-tensioner (squib) circuit
- Malfunction of the SRS-ECU

DIAGNOSIS

Required Special Tools:

- MB991958: Scan Tool (M.U.T.-III Sub Assembly)
  - MB991824: Vehicle Communication Interface (V.C.I.)
  - MB991827: M.U.T.-III USB Cable
  - MB991910: M.U.T.-III Main Harness A (Vehicles with CAN Communication System)
- MB991865: Dummy resistor
- MB991884: Resister harness

STEP 1. Using scan tool MB991958, diagnose the CAN bus line.

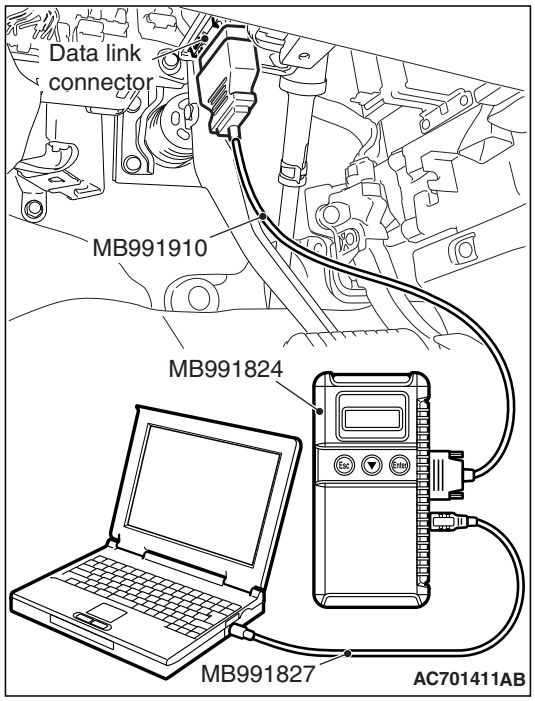

⚠ CAUTION

To prevent damage to scan tool MB991958, always turn the ignition switch to the "LOCK" (OFF) position before connecting or disconnecting scan tool MB991958.

(1) Connect scan tool MB991958. Refer to "How to connect the scan tool P.52B-28."
(2) Turn the ignition switch to the "ON" position.
(3) Diagnose the CAN bus line.
(4) Turn the ignition switch to the "LOCK" (OFF) position.

Q: Is the CAN bus line found to be normal?

YES : Go to Step 2.
NO : Repair the CAN bus line (Refer to GROUP 54C, Diagnosis P.54C-17).

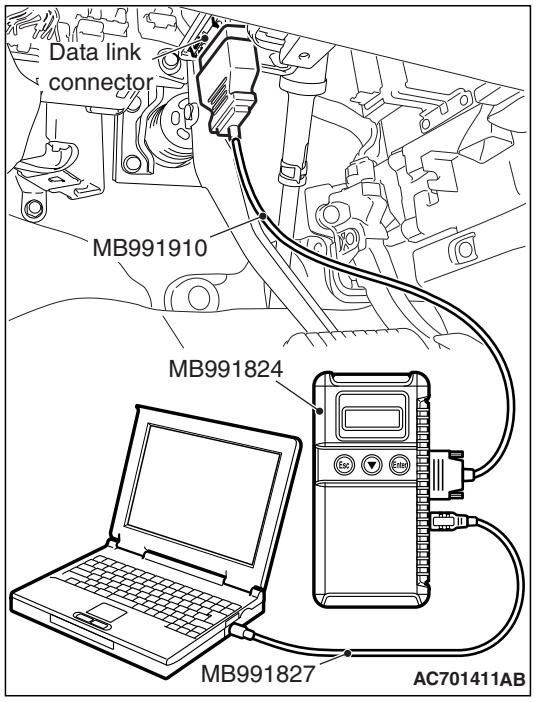

STEP 2. Recheck for diagnostic trouble code.

Check again if the DTC is set.

(1) Erase the DTC.
(2) Turn the ignition switch to the "ON" position.
(3) Check if the DTC is set.
(4) Turn the ignition switch to the "LOCK" (OFF) position.

Q: Is the DTC set?

YES : Go to Step 3.

NO : There is an intermittent malfunction such as poor engaged connector(s) or open circuit (Refer to GROUP 00, How to Cope with Intermittent Malfunction P.00-15).

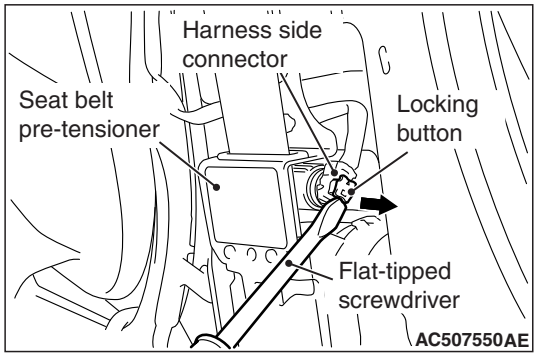

STEP 3. Check the driver's seat belt pre-tensioner. (Using scan tool MB991958, read the diagnostic trouble code.)

(1) Disconnect the negative battery terminal.
(2) Disconnect driver's seat belt pre-tensioner connector D-121. Use a flat-tipped screwdriver to unlock the locking button at the harness side connector by withdrawing it toward you in two stages, and then disconnect the connector.

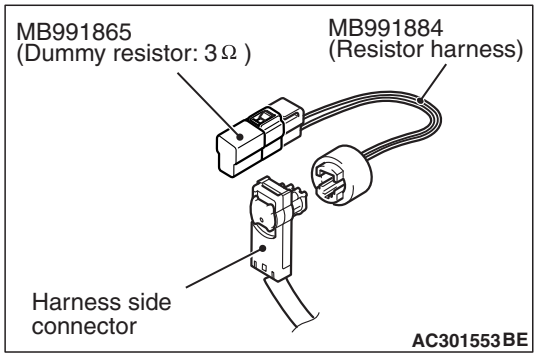

(3) Connect special tool MB991865 to special tool MB991884.
(4) Connect special tool MB991884 to the D-121 harness side connector.
(5) Connect the negative battery terminal.
(6) Erase diagnostic trouble code memory, and then check the diagnostic trouble code.

Q: Is DTC B1C3A set?

YES : Go to Step 4.

NO : Replace the driver's seat belt with pre-tensioner (Refer to P.52B-461). Then go to Step 5.

STEP 4. Check the harness for open circuit between SRS-ECU connector C-27 (terminal No.45 and 46) and the driver's seat belt pre-tensioner D-121 (terminal No.1 and 2).

(1) Disconnect the negative battery terminal.

(2) While pushing the part "A" indicated in the figure of the harness side connector, turn the lock lever to the direction of the arrow to release the lock lever, and disconnect the C-27 SRS-ECU connector.

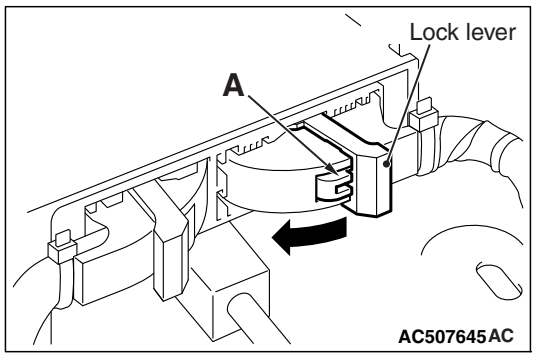

⚠ DANGER

To prevent the seat belt pre-tensioner from deploying unintentionally, disconnect the driver's seat belt pre-tensioner connector D-121 to short the squib circuit.

(3) Disconnect SRS-ECU connector C-27 and driver's seat belt pre-tensioner connector D-121, and measure at the wiring harness side. For connector D-121, use a flat-tipped screwdriver to unlock the locking button at the harness side connector by withdrawing it toward you in two stages, and then disconnect the connector.

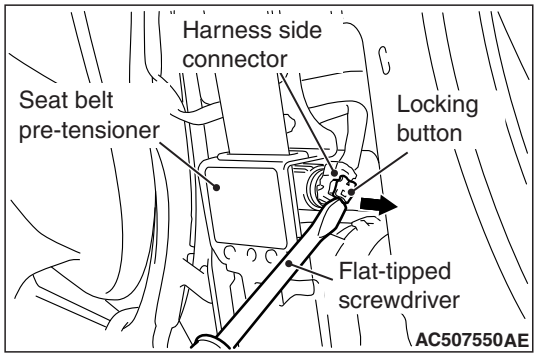

⚠ CAUTION

Insert an insulator such as a cable tie to a depth of 4mm (0.16 inch) or more, otherwise the short spring will not be released.

(4) Insert a cable tie [3 mm (0.12 inch) wide, 0.5 mm (0.02 inch) thick] between terminals 45, 46 and the short spring to release the short spring.

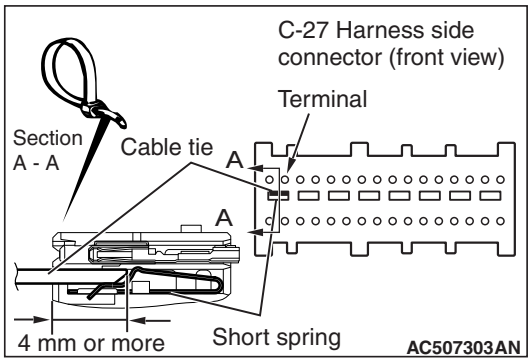

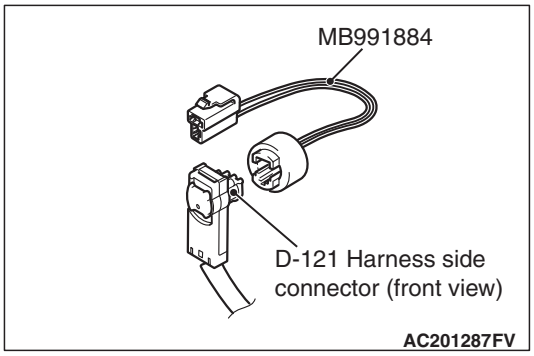

(5) Connect D-121 harness side connector to special tool MB991884.

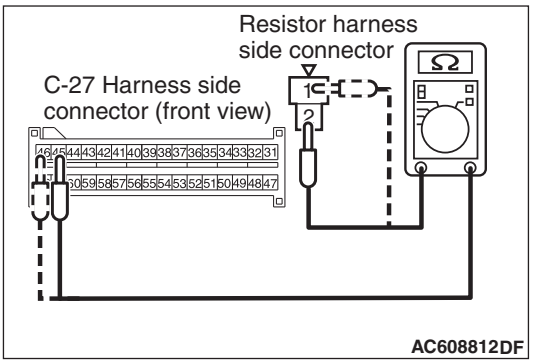

(6) Check for continuity between the following terminals. It should be less than 2 ohms.
- SRS-ECU connector C-27 (terminal No.45) and the special tool (terminal No.2)
- SRS-ECU connector C-27 (terminal No.46) and the special tool (terminal No.1)

Q: Does continuity exist?

YES : Erase the diagnostic trouble code memory, and recheck if any DTC set. If DTC B1C3A set, replace the SRS-ECU (Refer to P.52B-440). Then go to Step 5.

NO : Repair harness wires between SRS-ECU connector C-27 and driver's seat belt pre-tensioner connector D-121. Then go to Step 5.

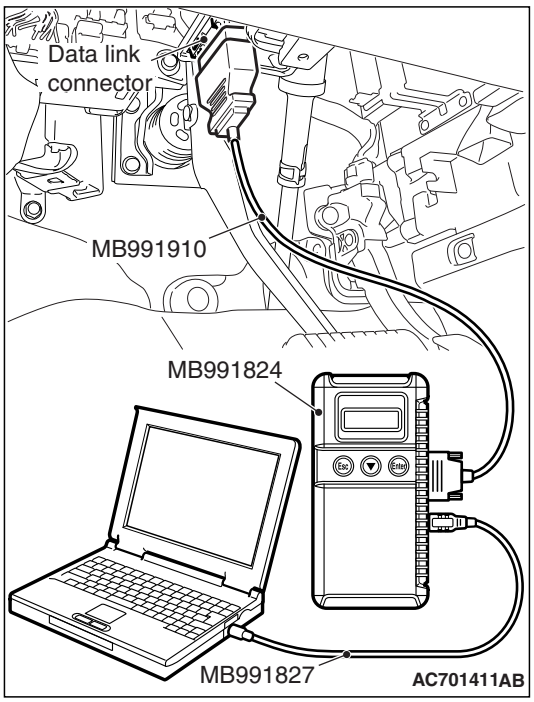

STEP 5. Recheck for diagnostic trouble code.

Check again if the DTC is set.

(1) Erase the DTC.
(2) Turn the ignition switch to the "ON" position.
(3) Check if the DTC is set.
(4) Turn the ignition switch to the "LOCK" (OFF) position.

Q: Is DTC B1C3A set?

YES : Return to Step 1.

NO : The procedure is complete.

DTC B1C3B: Driver's Seat Belt Pre-tensioner (Squib) System (Short Circuit between Squib Circuit Terminals)

Seat Belt Pre-Tensioner (Driver's side) (Squib) Circuit

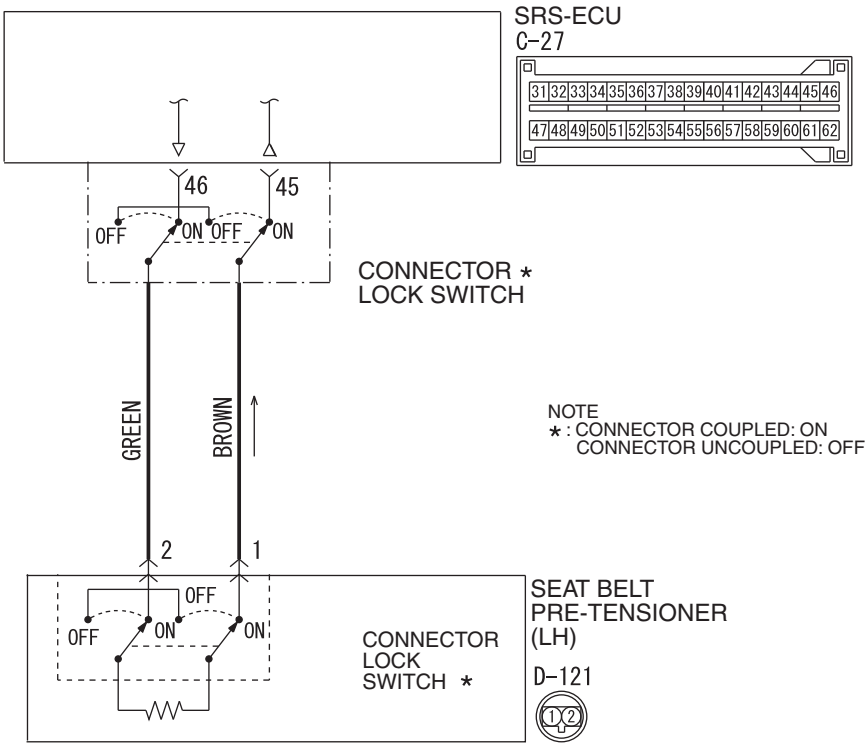

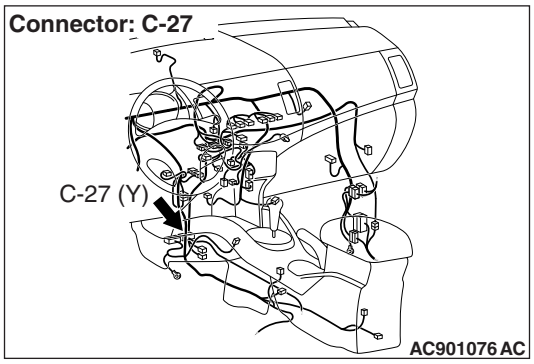

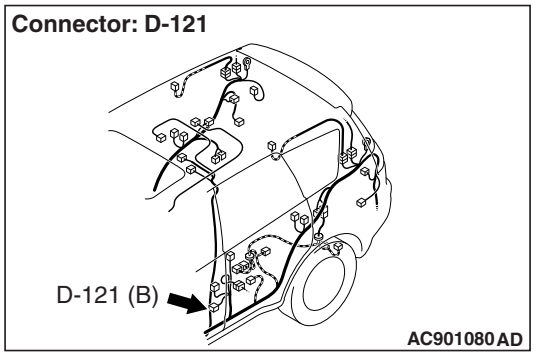

⚠ CAUTION

If DTC B1C3B is set in the SRS-ECU, always diagnose the CAN main bus line.

CIRCUIT OPERATION

The SRS-ECU judges how severe a collision is by detecting signals from the front impact sensors and the front air bag analog G-sensor. If the impact is over a predetermined level, the SRS-ECU sends an ignition signal. At this time, if the front air bag safing G-sensor is on, the pre-tensioner will deploy.

DTC SET CONDITIONS

This DTC is set if there is abnormal resistance between the input terminals of the driver's side seat belt pre-tensioner (squib).

TROUBLESHOOTING HITS

- Improper engaged connector or defective short spring*
- Short circuit between the driver's seat belt pre-tensioner (squib) circuit terminals
- Damaged connector(s)
- Malfunction of the SRS-ECU

*NOTE: *: The squib circuit connectors integrate a "short" spring (which prevents the seat belt pre-tensioner from deploying unintentionally due to static electricity by shorting the positive wire to the ground wire in the squib circuit when the connectors are disconnected) (Refer to P.52B-3). Therefore, if connector C-27 or D-121 is damaged or improperly engaged, the short spring may not be released when the connector is connected.*

DIAGNOSIS

Required Special Tools:

- MB991958: Scan Tool (M.U.T.-III Sub Assembly)
  - MB991824: Vehicle Communication Interface (V.C.I.)
  - MB991827: M.U.T.-III USB Cable
  - MB991910: M.U.T.-III Main Harness A (Vehicles with CAN Communication System)
- MB991865: Dummy resistor
- MB991884: Resister harness

STEP 1. Using scan tool MB991958, diagnose the CAN bus line.

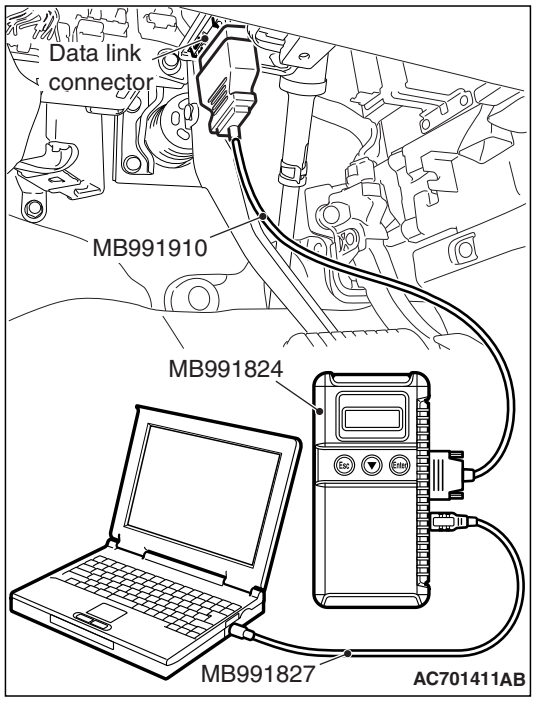

⚠ CAUTION

To prevent damage to scan tool MB991958, always turn the ignition switch to the "LOCK" (OFF) position before connecting or disconnecting scan tool MB991958.

(1) Connect scan tool MB991958. Refer to "How to connect the scan tool P.52B-28."
(2) Turn the ignition switch to the "ON" position.
(3) Diagnose the CAN bus line.
(4) Turn the ignition switch to the "LOCK" (OFF) position.

Q: Is the CAN bus line found to be normal?

YES : Go to Step 2 .
NO : Repair the CAN bus line (Refer to GROUP 54C, Diagnosis P.54C-17).

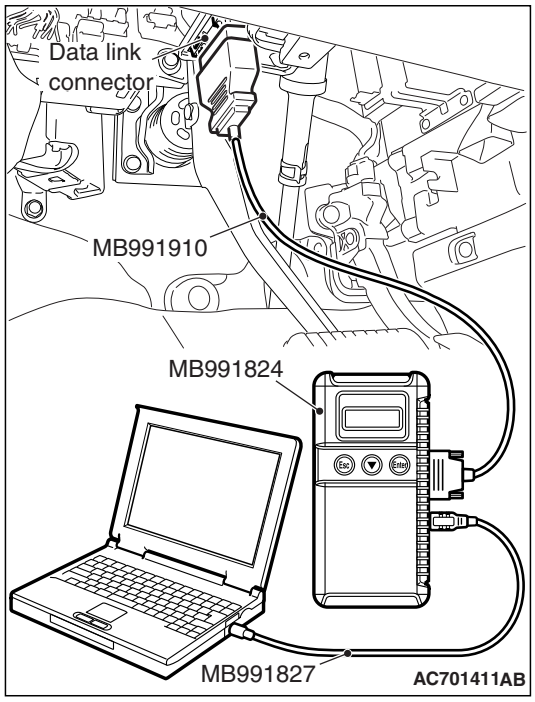

STEP 2. Recheck for diagnostic trouble code.

Check again if the DTC is set.

(1) Erase the DTC.
(2) Turn the ignition switch to "ON" position.
(3) Check if the DTC is set.
(4) Turn the ignition switch to the "LOCK" (OFF) position.

Q: Is the DTC set?

YES : Go to Step 3 .

NO : There is an intermittent malfunction such as poor engaged connector(s) or open circuit (Refer to GROUP 00, How to Cope with Intermittent Malfunction P.00-15).

STEP 3. Check SRS-ECU connector C-27 and driver's seat belt pre-tensioner connector D-121. (Using scan tool MB991958, read the diagnostic trouble code.)

(1) Disconnect the negative battery terminal.
(2) While pushing the part "A" indicated in the figure of the harness side connector, turn the lock lever to the direction of the arrow to release the lock lever, and disconnect the C-27 SRS-ECU connector. Then connect the connector.

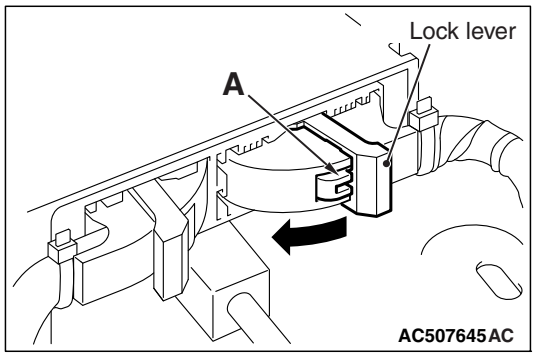

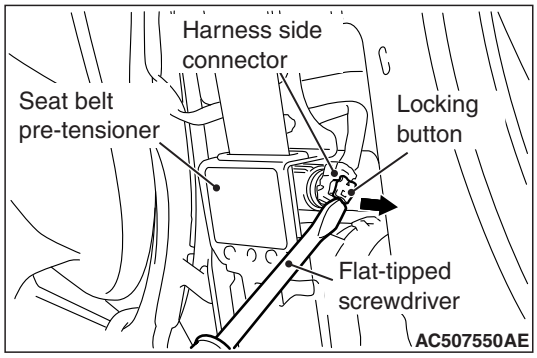

(3) After disconnecting the D-121 harness side connectors, connect the connectors again. For the D-121 connector disconnection, use a flat-tipped screwdriver to unlock the locking button at the harness side connector by withdrawing it toward you in two stages, and then disconnect the connector.
(4) Connector the negative battery terminal.
(5) Erase the diagnostic trouble code memory, and check the diagnostic trouble code.

Q: Is DTC B1C3B set?

YES : Go to Step 4.

NO : The procedure is complete. It is assumed that DTC B1C3B set because connector C-27 or D-121 was engaged improperly.

STEP 4. Check the driver's seat belt pre-tensioner. (Using scan tool MB991958, read the diagnostic trouble code.)

(1) Disconnect the negative battery terminal.

(2) While pushing the part "A" indicated in the figure of the harness side connector, turn the lock lever to the direction of the arrow to release the lock lever, and disconnect the C-27 SRS-ECU connector.

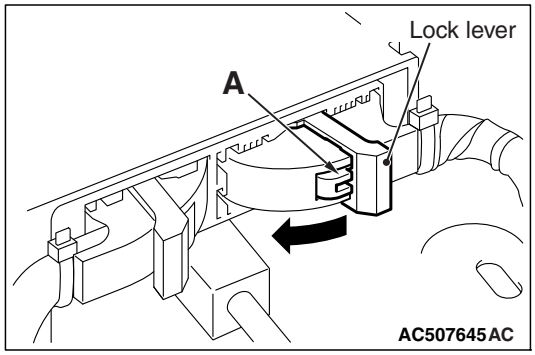

(3) Disconnect driver's seat belt pre-tensioner connector D-121. Use a flat-tipped screwdriver to unlock the locking button at the harness side connector by withdrawing it toward you in two stages, and then disconnect the connector.

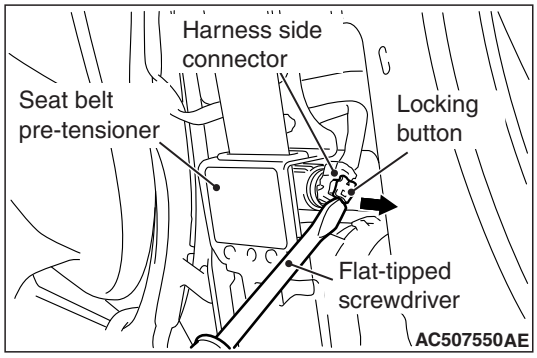

(4) Connect special tool MB991865 to special tool MB991884.

(5) Connect special tool MB991884 to the D-121 harness side connector.

(6) Connect the negative battery terminal.

(7) Erase diagnostic trouble code memory, and then check the diagnostic trouble code.

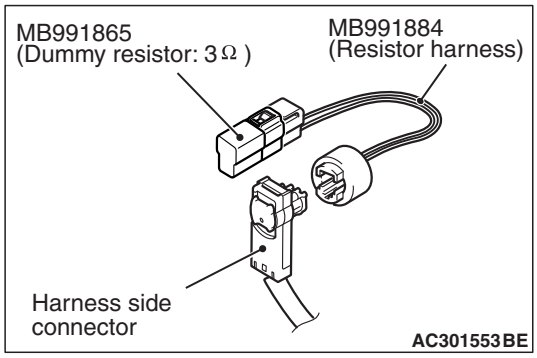

Q: Is DTC B1C3B set?

YES : Go to Step 5.

NO : Replace the driver's seat with belt pre-tensioner. (Refer to P.52B-461). Then go to Step 7.

STEP 5. Check the driver's seat belt pre-tensioner circuit. Measure the resistance at the SRS-ECU connector C-27.

(1) Disconnect the negative battery terminal.

(2) While pushing the part "A" indicated in the figure of the harness side connector, turn the lock lever to the direction of the arrow to release the lock lever, and disconnect the C-27 SRS-ECU connector.

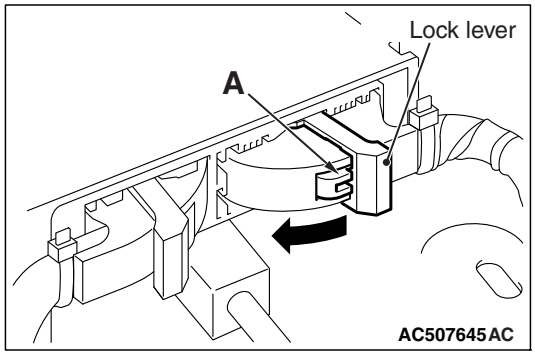

⚠ DANGER

To prevent the seat belt pre-tensioner from deploying unintentionally, disconnect the driver's seat belt pre-tensioner connector D-121 to short the squib circuit.

(3) Disconnect driver's seat belt pre-tensioner connector D-121. Use a flat-tipped screwdriver to unlock the locking button at the harness side connector by withdrawing it toward you in two stages, and then disconnect the connector.

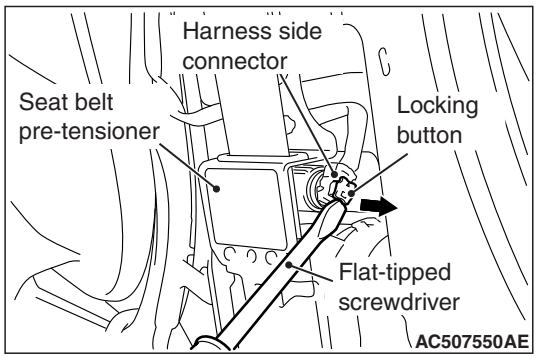

⚠ CAUTION

Insert an insulator such as a cable tie to a depth of 4mm (0.16 inch) or more, otherwise the short spring will not be released.

(4) Insert a cable tie [3 mm (0.12 inch) wide, 0.5 mm (0.02 inch) thick] between terminals 45, 46 and the short spring to release the short spring.

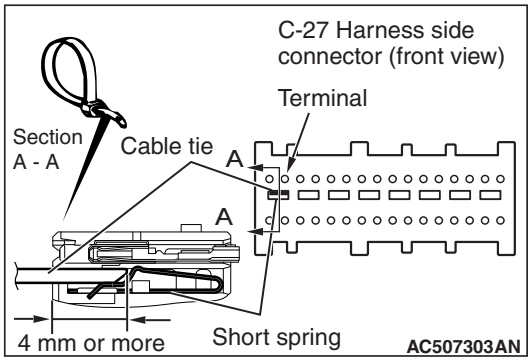

(5) Check for continuity between C-27 harness side connector terminals 45 and 46.
It should be an open circuit.

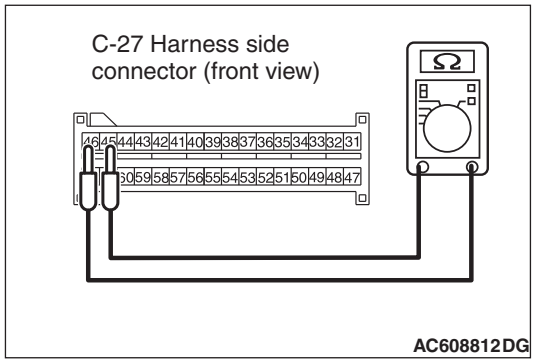

Q: Is it open circuit?

YES : Erase the diagnostic trouble code memory, and check the diagnostic trouble code. If DTC B1C3B sets, replace the SRS-ECU (Refer to P.52B-440). Then go to Step 7.

NO : Go to Step 6.

STEP 6. Check the harness for short circuit between SRS-ECU connector C-27 (terminal No.45 and 46) and driver's seat belt pre-tensioner connector D-121 (terminal No.1 and 2).

Q: Is the check result normal?

YES : Go to Step 7.

NO : Repair the harness wires between SRS-ECU connector C-27 and driver's seat belt pre-tensioner connector D-121. Then go to Step 7.

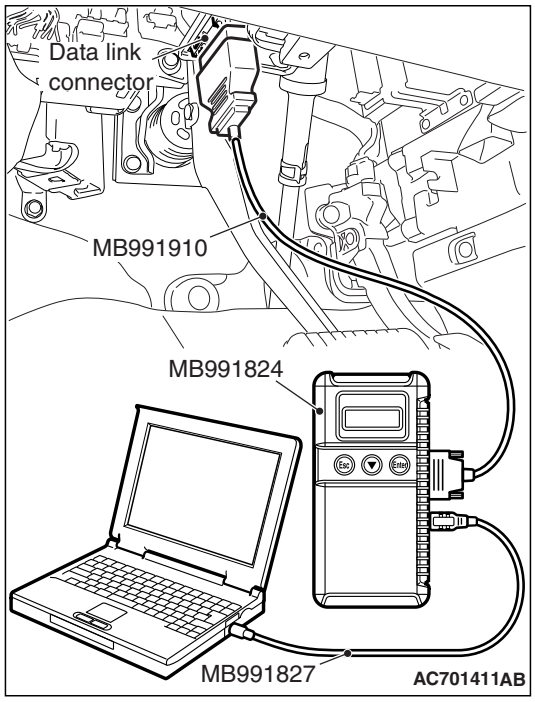

STEP 7. Recheck for diagnostic trouble code.

Check again if the DTC is set.

(1) Erase the DTC.

(2) Turn the ignition switch to the "ON" position.

(3) Check if the DTC is set.

(4) Turn the ignition switch to the "LOCK" (OFF) position.

Q: Is DTC B1C3B set?

YES : Return to Step 1.

NO : The procedure is complete.

DTC B1C47: Front Passenger's Seat Belt Pre-tensioner (Squib) System (Shorted to Squib Circuit Ground)

Seat Belt Pre-Tensioner (passenger's side) (Squib) Circuit

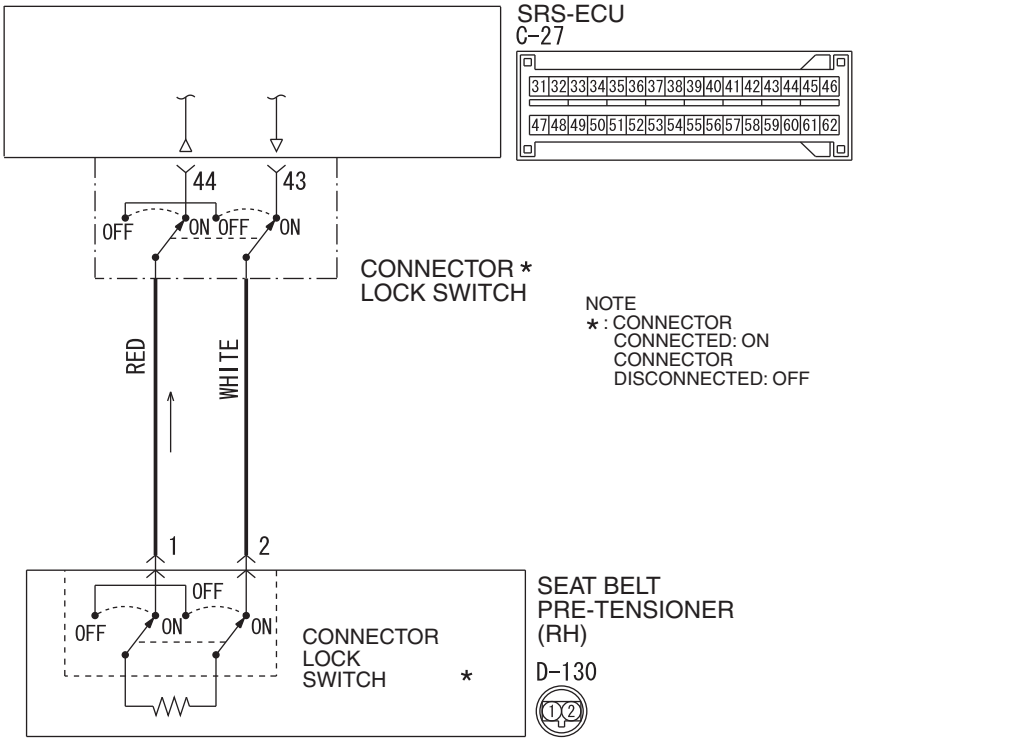

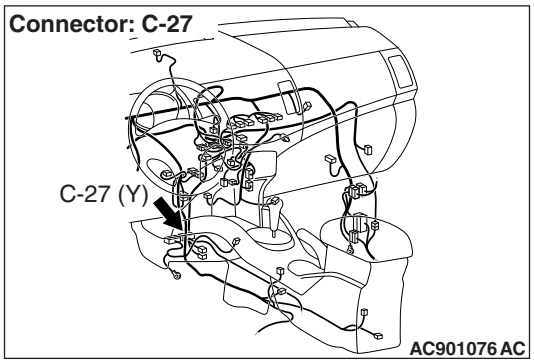

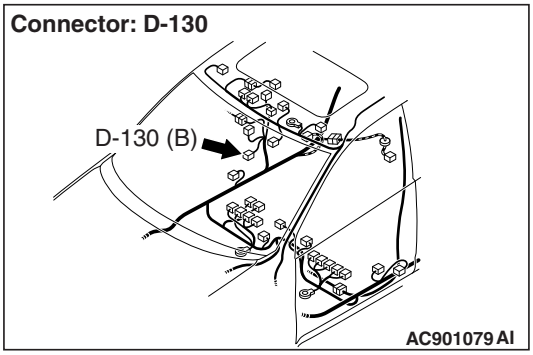

⚠ CAUTION

If DTC B1C47 is set in the SRS-ECU, always diagnose the CAN main bus line.

CIRCUIT OPERATION

The SRS-ECU judges how severe a collision is by detecting signals from the front impact sensors and the front air bag analog G-sensor. If the impact is over a predetermined level, the SRS-ECU sends an ignition signal. At this time, if the front air bag safing G-sensor is on, the pre-tensioner will deploy.

DTC SET CONDITIONS

This DTC is set if there is abnormal resistance between the input terminals of the passenger's seat belt pre-tensioner (squib).

TROUBLESHOOTING HITS

- Damaged wiring harnesses or connectors
- Short to the ground in the passenger's seat belt pre-tensioner (squib) harness
- Malfunction of the SRS-ECU

DIAGNOSIS

Required Special Tools:

- MB991958: Scan Tool (M.U.T.-III Sub Assembly)
  - MB991824: Vehicle Communication Interface (V.C.I.)
  - MB991827: M.U.T.-III USB Cable
  - MB991910: M.U.T.-III Main Harness A (Vehicles with CAN Communication System)
- MB991865: Dummy resistor
- MB991884: Resister harness

STEP 1. Using scan tool MB991958, diagnose the CAN bus line.

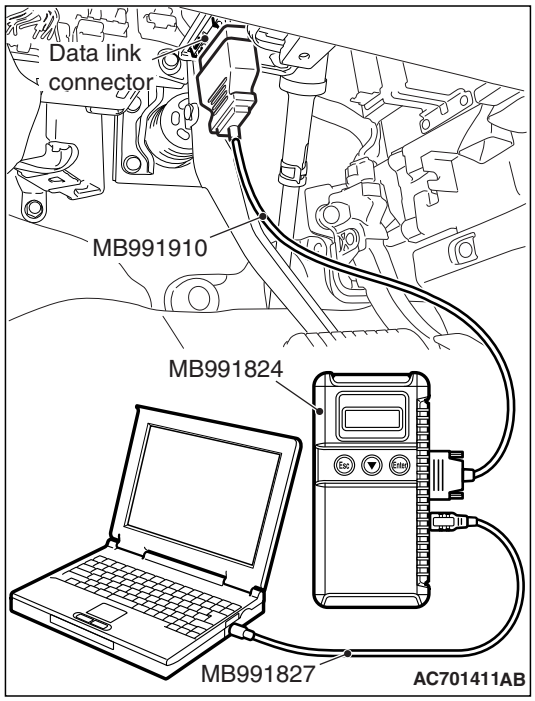

⚠ CAUTION

To prevent damage to scan tool MB991958, always turn the ignition switch to the "LOCK" (OFF) position before connecting or disconnecting scan tool MB991958.

(1) Connect scan tool MB991958. Refer to "How to connect the scan tool P.52B-28."
(2) Turn the ignition switch to the "ON" position.
(3) Diagnose the CAN bus line.
(4) Turn the ignition switch to the "LOCK" (OFF) position.

Q: Is the CAN bus line found to be normal?

YES : Go to Step 2.
NO : Repair the CAN bus line (Refer to GROUP 54C, Diagnosis P.54C-17).

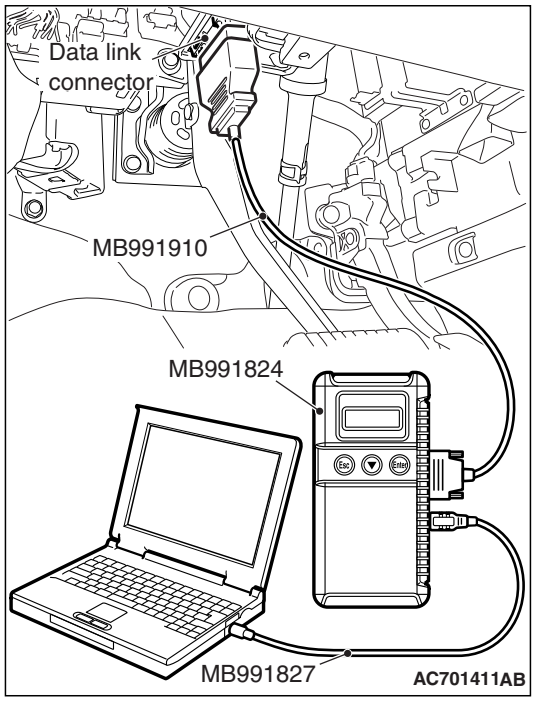

STEP 2. Recheck for diagnostic trouble code.

Check again if the DTC is set.

(1) Erase the DTC.
(2) Turn the ignition switch to "ON" position.
(3) Check if the DTC is set.
(4) Turn the ignition switch to the "LOCK" (OFF) position.

Q: Is the DTC set?

YES : Go to Step 3.

NO : There is an intermittent malfunction such as poor engaged connector(s) or open circuit (Refer to GROUP 00, How to Cope with Intermittent Malfunction P.00-15).

STEP 3. Check the passenger's seat belt pre-tensioner. (Using scan tool MB991958, read the diagnostic trouble code.)

(1) Disconnect the negative battery terminal.
(2) Disconnect passenger's seat belt pre-tensioner connector D-130. Use a flat-tipped screwdriver to unlock the locking button at the harness side connector by withdrawing it toward you in two stages, and then disconnect the connector.

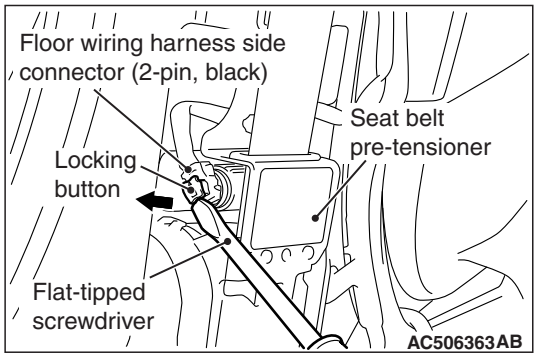

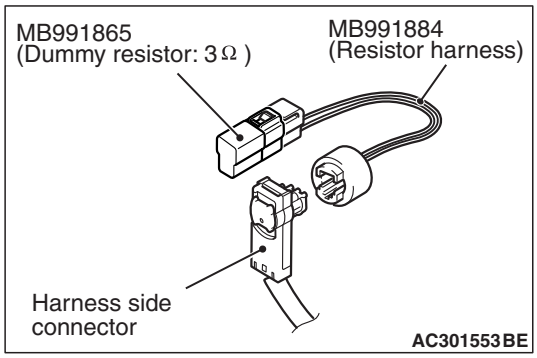

(3) Connect special tool MB991865 to special tool MB991884.
(4) Connect special tool MB991884 to the D-130 harness side connector.
(5) Connect the negative battery terminal.
(6) Erase diagnostic trouble code memory, and then check the diagnostic trouble code.

Q: Is DTC B1C47 set?

YES : Go to Step 4.

NO : Replace the passenger's seat belt with pre-tensioner (Refer to P.52B-461). Then go to Step 6.

STEP 4. Check the passenger's seat belt pre-tensioner circuit. Measure the resistance at the SRS-ECU connector C-27.

(1) Disconnect the negative battery terminal.

(2) While pushing the part "A" indicated in the figure of the harness side connector, turn the lock lever to the direction of the arrow to release the lock lever, and disconnect the C-27 SRS-ECU connector.

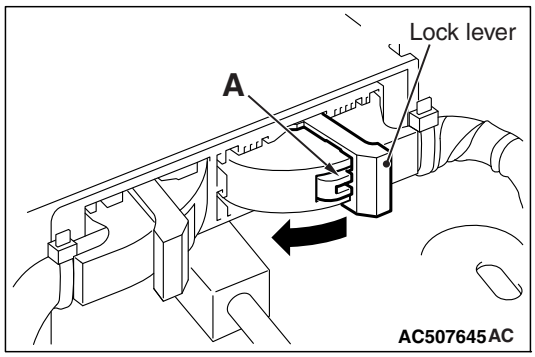

⚠ ***DANGER***

To prevent the seat belt pre-tensioner from deploying unintentionally, disconnect the passenger's seat belt pre-tensioner connector D-130 to short the squib circuit.

(3) Disconnect passenger's seat belt pre-tensioner connector D-130. Use a flat-tipped screwdriver to unlock the locking button at the harness side connector by withdrawing it toward you in two stages, and then disconnect the connector.

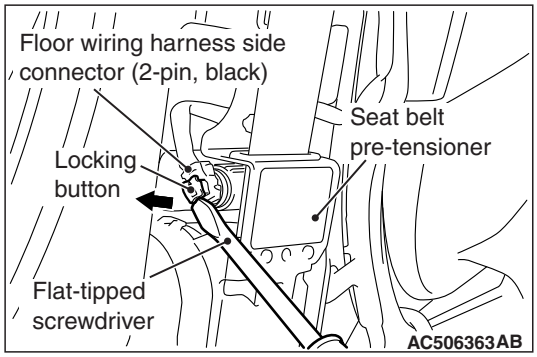

⚠ **CAUTION**

Insert an insulator such as a cable tie to a depth of 4mm (0.16 inch) or more, otherwise the short spring will not be released.

(4) Insert a cable tie [3 mm (0.12 inch) wide, 0.5 mm (0.02 inch) thick] between terminals 43, 44 and the short spring to release the short spring.

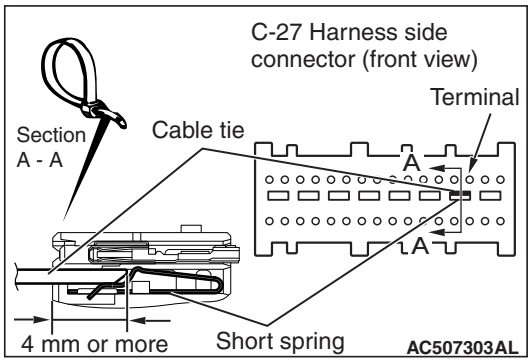

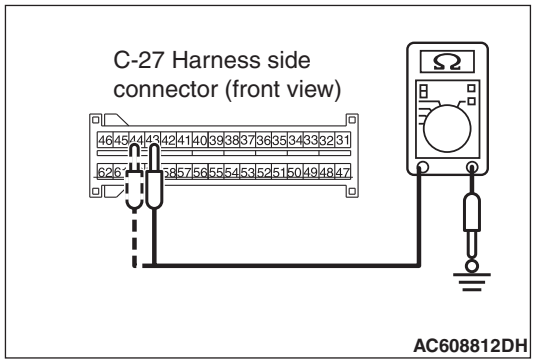

(5) Check for continuity between C-27 harness side connector terminals 43, 44 and body ground.
It should be an open circuit.

Q: Is it open circuit?

YES : Erase the diagnostic trouble code memory, and check the diagnostic trouble code. If DTC B1C47 sets, replace the SRS-ECU (Refer to P.52B-440). Then go to Step 6.

NO : Go to Step 5.

STEP 5. Check harness wires for short circuit to ground between SRS-ECU connector C-27 (terminal No.43 and 44) and passenger's seat belt pre-tensioner connector D-130 (terminal No.2 and 1).

Q: Is the check result normal?

YES : Go to Step 6.

NO : Repair the harness wires between SRS-ECU connector C-27 and passenger's seat belt pre-tensioner connector D-130. Then go to Step 6.

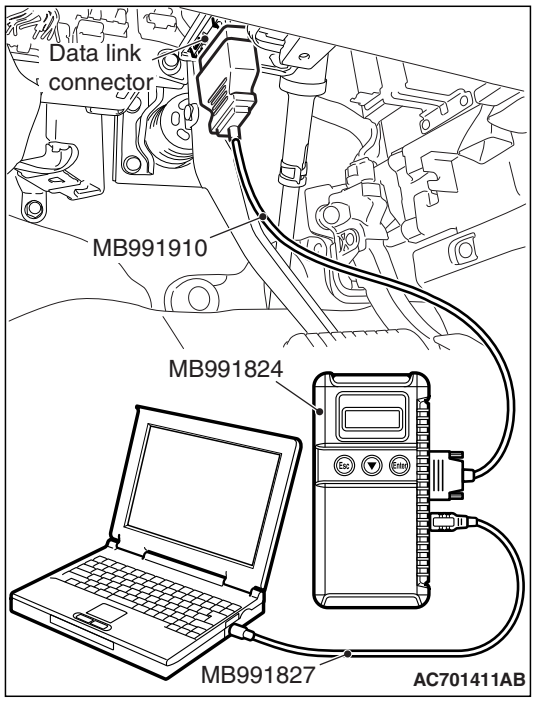

STEP 6. Recheck for diagnostic trouble code.

Check again if the DTC is set.

(1) Erase the DTC.
(2) Turn the ignition switch to the "ON" position.
(3) Check if the DTC is set.
(4) Turn the ignition switch to the "LOCK" (OFF) position.

Q: Is DTC B1C47 set?

YES : Return to Step 1.

NO : The procedure is complete.

DTC B1C48: Front Passenger's Seat Belt Pre-tensioner (Squib) System (Shorted to Squib Circuit Power Supply)

Seat Belt Pre-Tensioner (passenger's side) (Squib) Circuit

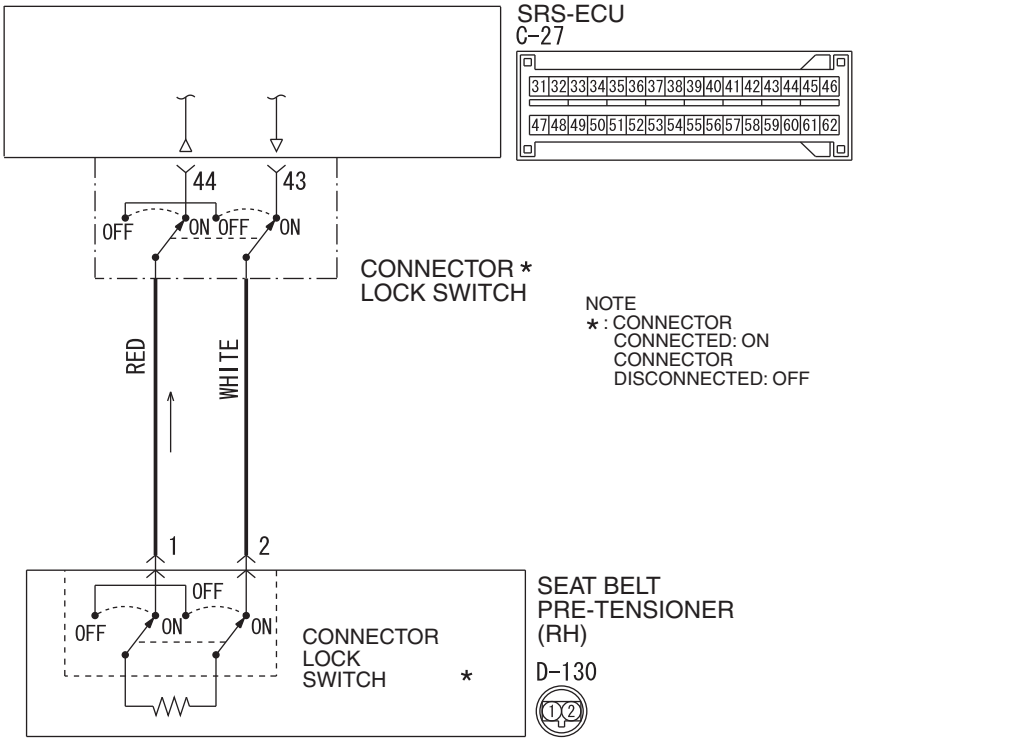

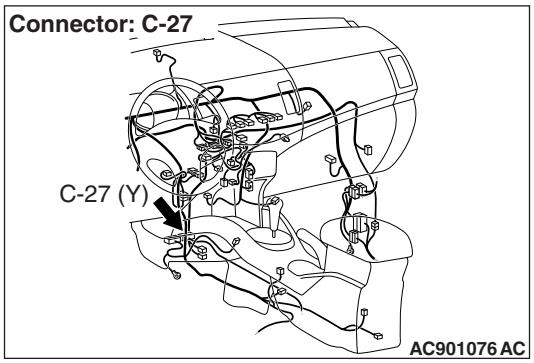

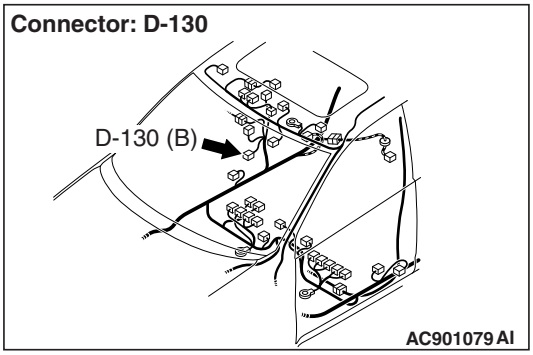

⚠ CAUTION

If DTC B1C48 is set in the SRS-ECU, always diagnose the CAN main bus line.

CIRCUIT OPERATION

The SRS-ECU judges how severe a collision is by detecting signals from the front impact sensors and the front air bag analog G-sensor. If the impact is over a predetermined level, the SRS-ECU sends an ignition signal. At this time, if the front air bag safing G-sensor is on, the pre-tensioner will deploy.

DTC SET CONDITIONS

This DTC is set if there is abnormal resistance between the input terminals of the passenger's seat belt pre-tensioner (squib).

TROUBLESHOOTING HITS

- Damaged wiring harnesses or connectors
- Short to the power supply in the passenger's seat belt pre-tensioner (squib) harness
- Malfunction of the SRS-ECU

DIAGNOSIS

Required Special Tools:

- MB991958: Scan Tool (M.U.T.-III Sub Assembly)
  - MB991824: Vehicle Communication Interface (V.C.I.)
  - MB991827: M.U.T.-III USB Cable
  - MB991910: M.U.T.-III Main Harness A (Vehicles with CAN Communication System)
- MB991865: Dummy resistor
- MB991884: Resister harness

STEP 1. Using scan tool MB991958, diagnose the CAN bus line.

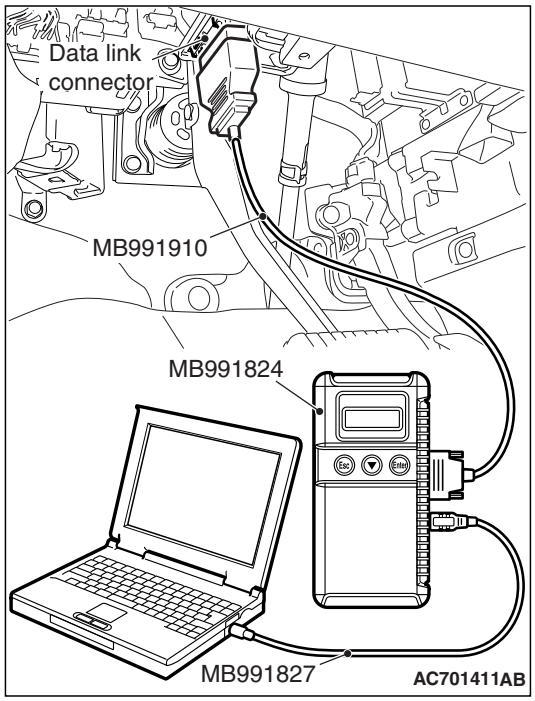

⚠ CAUTION

To prevent damage to scan tool MB991958, always turn the ignition switch to the "LOCK" (OFF) position before connecting or disconnecting scan tool MB991958.

(1) Connect scan tool MB991958. Refer to "How to connect the scan tool P.52B-28."
(2) Turn the ignition switch to the "ON" position.
(3) Diagnose the CAN bus line.
(4) Turn the ignition switch to the "LOCK" (OFF) position.

Q: Is the CAN bus line found to be normal?

YES : Go to Step 2.
NO : Repair the CAN bus line (Refer to GROUP 54C, Diagnosis P.54C-17).

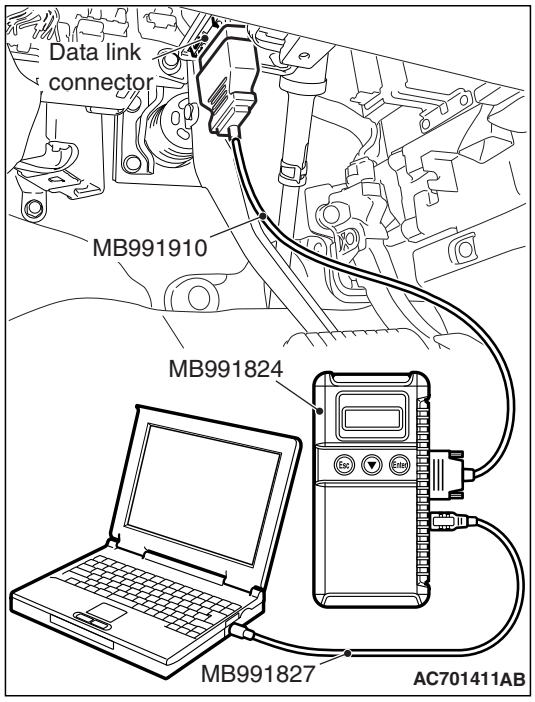

STEP 2. Recheck for diagnostic trouble code.

Check again if the DTC is set.

(1) Erase the DTC.
(2) Turn the ignition switch to "ON" position.
(3) Check if the DTC is set.
(4) Turn the ignition switch to the "LOCK" (OFF) position.

Q: Is the DTC set?

YES : Go to Step 3.

NO : There is an intermittent malfunction such as poor engaged connector(s) or open circuit (Refer to GROUP 00, How to Cope with Intermittent Malfunction P.00-15).

STEP 3. Check the passenger's seat belt pre-tensioner. (Using scan tool MB991958, read the diagnostic trouble code.)

(1) Disconnect the negative battery terminal.
(2) Disconnect passenger's seat belt pre-tensioner connector D-130. Use a flat-tipped screwdriver to unlock the locking button at the harness side connector by withdrawing it toward you in two stages, and then disconnect the connector.

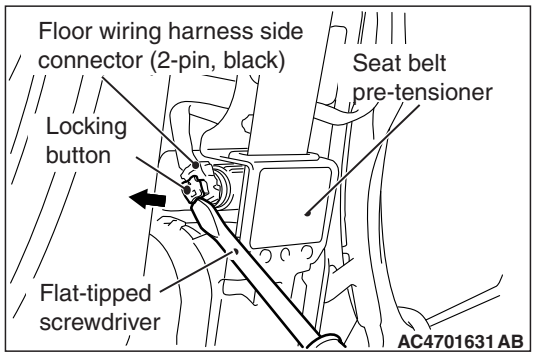

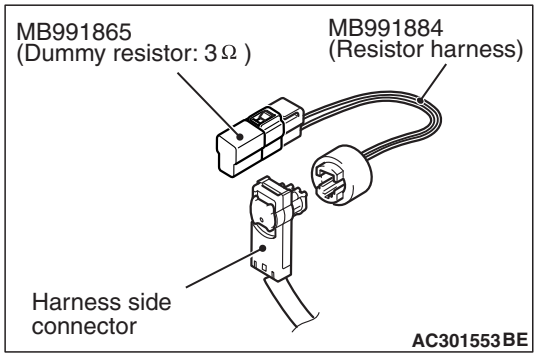

(3) Connect special tool MB991865 to special tool MB991884.
(4) Connect special tool MB991884 to the D-130 harness side connector.
(5) Connect the negative battery terminal.
(6) Erase diagnostic trouble code memory, and then check the diagnostic trouble code.

Q: Is DTC B1C48 set?

YES : Go to Step 4.

NO : Replace the passenger's seat belt with pre-tensioner (Refer to P.52B-461). Then go to Step 6.

STEP 4. Check the passenger's seat belt pre-tensioner circuit. Measure the voltage at the SRS-ECU connector C-27.

(1) Disconnect the negative battery terminal.

(2) While pushing the part "A" indicated in the figure of the harness side connector, turn the lock lever to the direction of the arrow to release the lock lever, and disconnect the C-27 SRS-ECU connector.

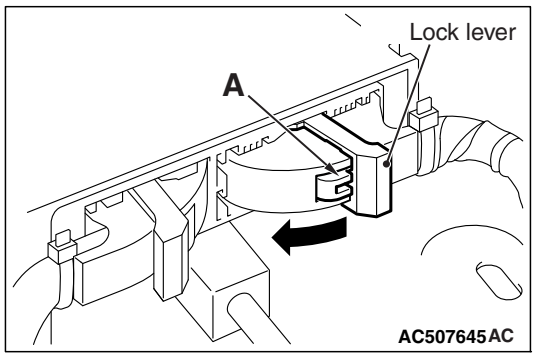

⚠ ***DANGER***

To prevent the seat belt pre-tensioner from deploying unintentionally, disconnect the passenger's seat belt pre-tensioner connector D-130 to short the squib circuit.

(3) Disconnect passenger's seat belt pre-tensioner connector D-130. Use a flat-tipped screwdriver to unlock the locking button at the harness side connector by withdrawing it toward you in two stages, and then disconnect the connector.

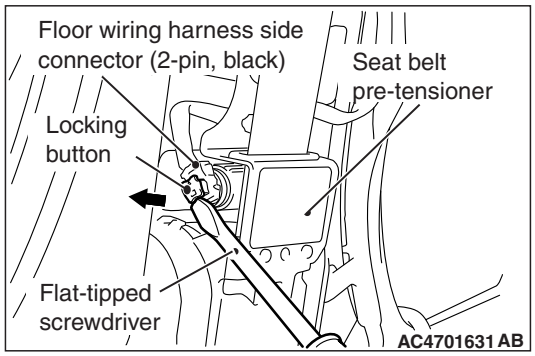

⚠ **CAUTION**

Insert an insulator such as a cable tie to a depth of 4mm (0.16 inch) or more, otherwise the short spring will not be released.

(4) Insert a cable tie [3 mm (0.12 inch) wide, 0.5 mm (0.02 inch) thick] between terminals 43, 44 and the short spring to release the short spring.

(5) Connect the negative battery terminal.

(6) Ignition switch: "ON".

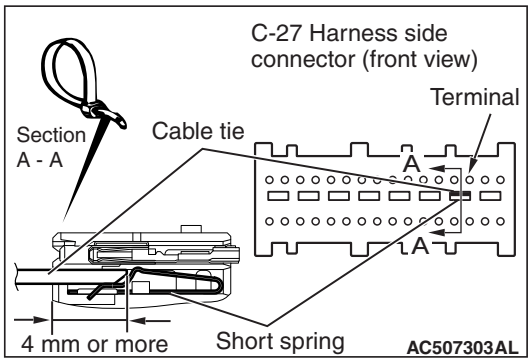

(7) Measure the voltage between C-27 harness side connector terminals 43, 44 and body ground.
Voltage should measure 1 volt or less.

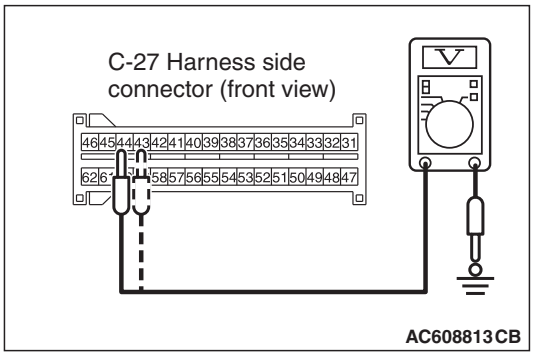

Q: Is the measured voltage within the specified range?

YES : Erase the diagnostic trouble code memory, and check the diagnostic trouble code. If DTC B1C48 sets, replace the SRS-ECU (Refer to P.52B-440). Then go to Step 6.

NO : Go to Step 5.

STEP 5. Check the harness wires for short circuit to power supply between SRS-ECU connector C-27 (terminal No.43 and 44) and passenger's seat belt pre-tensioner connector D-130 (terminal No.2 and 1).

Q: Is the check result normal?

YES : Go to Step 6.

NO : Repair the harness wires between SRS-ECU connector C-27 and passenger's seat belt pre-tensioner connector D-130. Then go to Step 6.

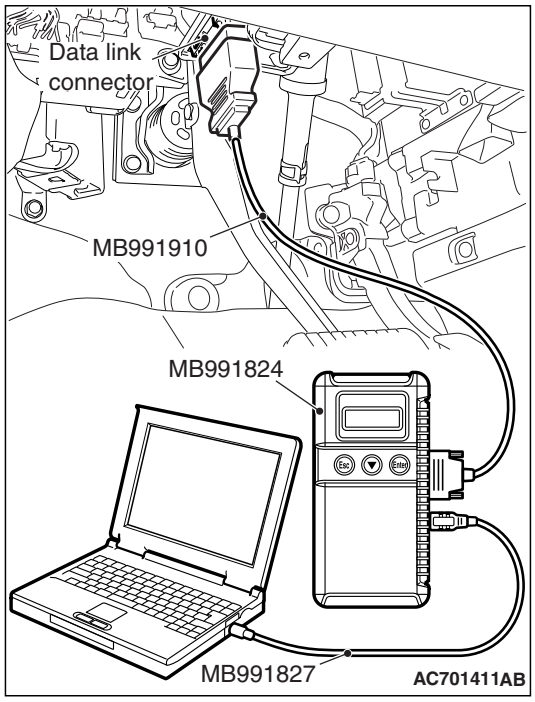

STEP 6. Recheck for diagnostic trouble code.

Check again if the DTC is set.

(1) Erase the DTC.

(2) Turn the ignition switch to the "ON" position.

(3) Check if the DTC is set.

(4) Turn the ignition switch to the "LOCK" (OFF) position.

Q: Is DTC B1C48 set?

YES : Return to Step 1.

NO : The procedure is complete.

DTC B1C49: Front Passenger's Seat Belt Pre-tensioner (Squib) System (Squib Circuit Open)

Seat Belt Pre-Tensioner (passenger's side) (Squib) Circuit

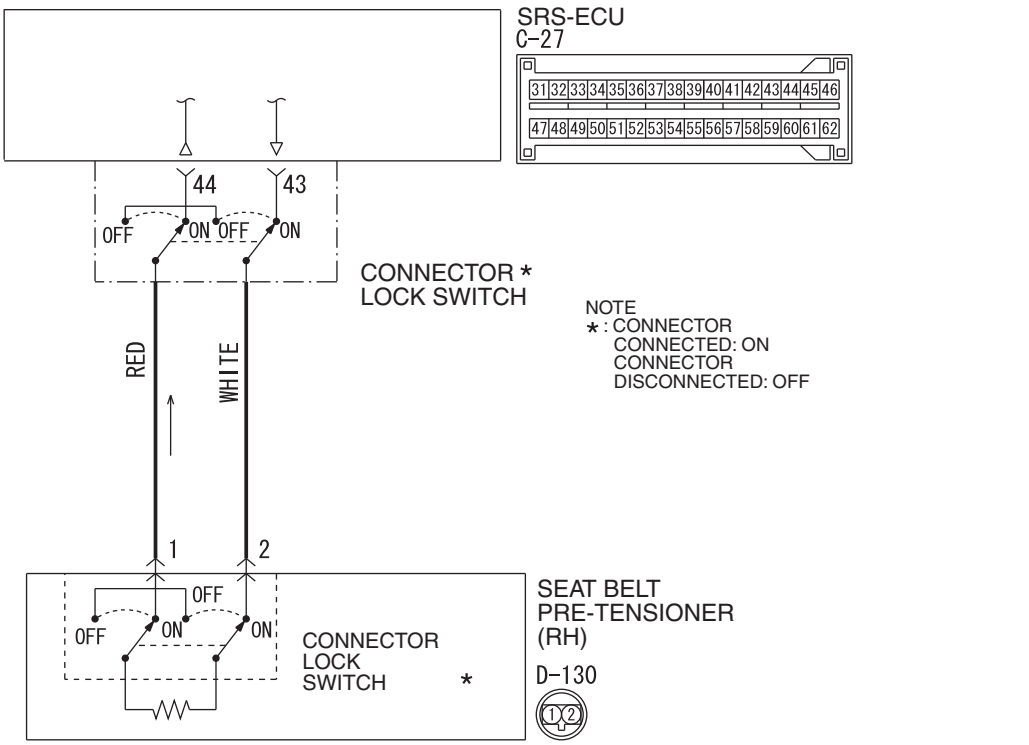

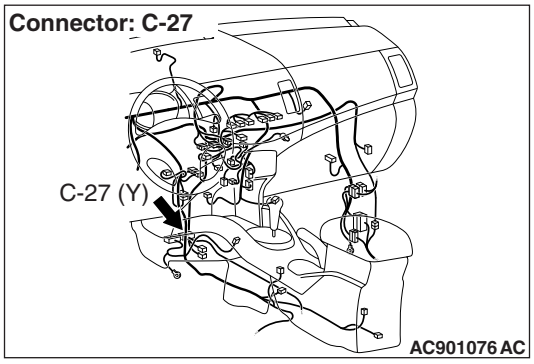

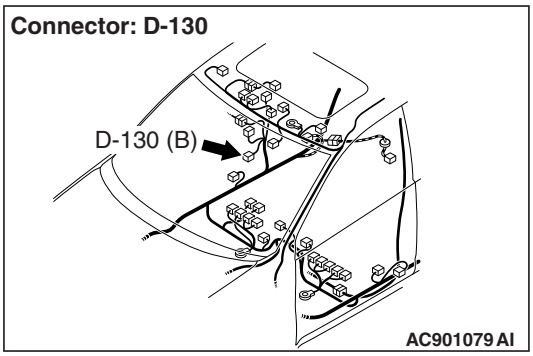

⚠ CAUTION

If DTC B1C49 is set in the SRS-ECU, always diagnose the CAN main bus line.

CIRCUIT OPERATION

The SRS-ECU judges how severe a collision is by detecting signals from the front impact sensors and the front air bag analog G-sensor. If the impact is over a predetermined level, the SRS-ECU sends an ignition signal. At this time, if the front air bag safing G-sensor is on, the pre-tensioner will deploy.

DTC SET CONDITIONS

This DTC is set if there is abnormal resistance between the input terminals of the passenger's seat belt pre-tensioner (squib).

TROUBLESHOOTING HITS

- Open circuit in the passenger's seat belt pre-tensioner (squib) circuit
- Improper connector contact
- Malfunction of the SRS-ECU

DIAGNOSIS

Required Special Tools:

- MB991958: Scan Tool (M.U.T.-III Sub Assembly)
  - MB991824: Vehicle Communication Interface (V.C.I.)
  - MB991827: M.U.T.-III USB Cable
  - MB991910: M.U.T.-III Main Harness A (Vehicles with CAN Communication System)
- MB991865: Dummy resistor
- MB991884: Resister harness

STEP 1. Using scan tool MB991958, diagnose the CAN bus line.

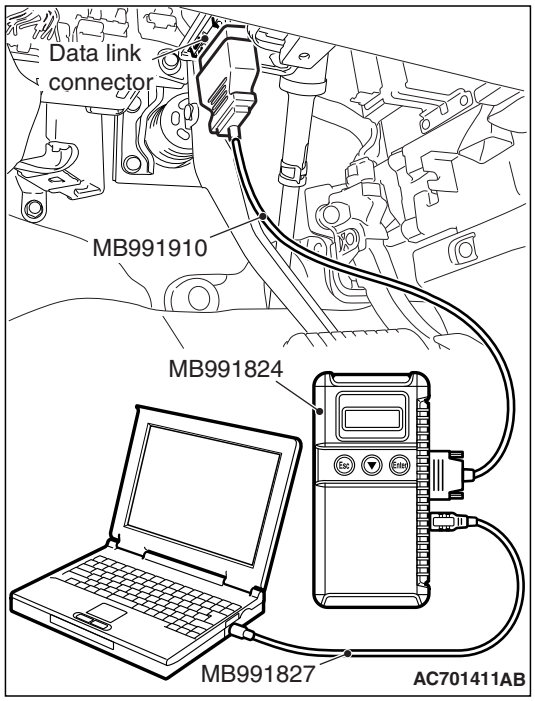

⚠ CAUTION

To prevent damage to scan tool MB991958, always turn the ignition switch to the "LOCK" (OFF) position before connecting or disconnecting scan tool MB991958.

(1) Connect scan tool MB991958. Refer to "How to connect the scan tool P.52B-28."
(2) Turn the ignition switch to the "ON" position.
(3) Diagnose the CAN bus line.
(4) Turn the ignition switch to the "LOCK" (OFF) position.

Q: Is the CAN bus line found to be normal?

YES : Go to Step 2.
NO : Repair the CAN bus line (Refer to GROUP 54C, Diagnosis P.54C-17).

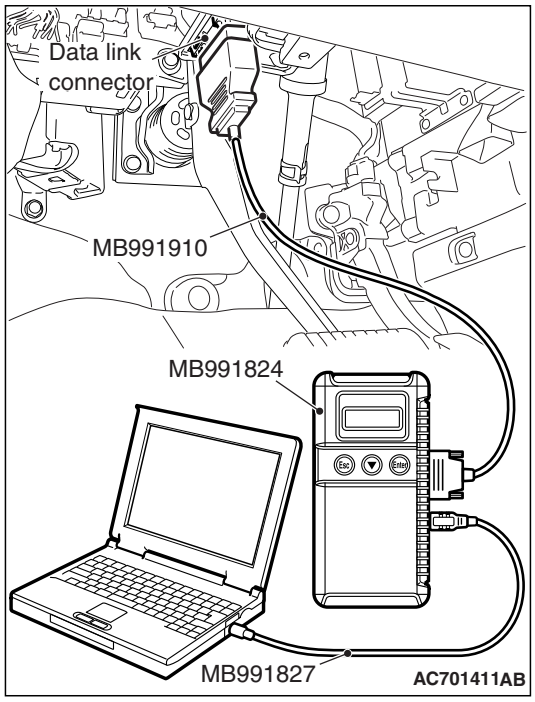

STEP 2. Recheck for diagnostic trouble code.

Check again if the DTC is set.

(1) Erase the DTC.
(2) Turn the ignition switch to "ON" position.
(3) Check if the DTC is set.
(4) Turn the ignition switch to the "LOCK" (OFF) position.

Q: Is the DTC set?

YES : Go to Step 3.

NO : There is an intermittent malfunction such as poor engaged connector(s) or open circuit (Refer to GROUP 00, How to Cope with Intermittent Malfunction P.00-15).

STEP 3. Check the passenger's seat belt pre-tensioner. (Using scan tool MB991958, read the diagnostic trouble code.)

(1) Disconnect the negative battery terminal.
(2) Disconnect passenger's seat belt pre-tensioner connector D-130. Use a flat-tipped screwdriver to unlock the locking button at the harness side connector by withdrawing it toward you in two stages, and then disconnect the connector.

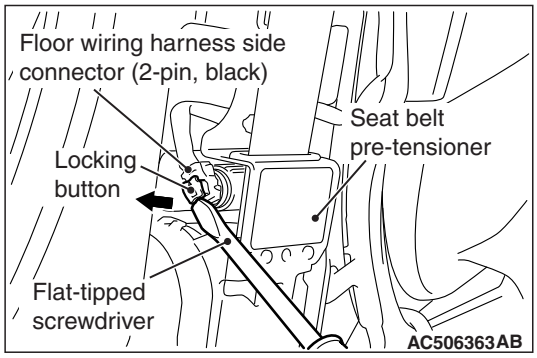

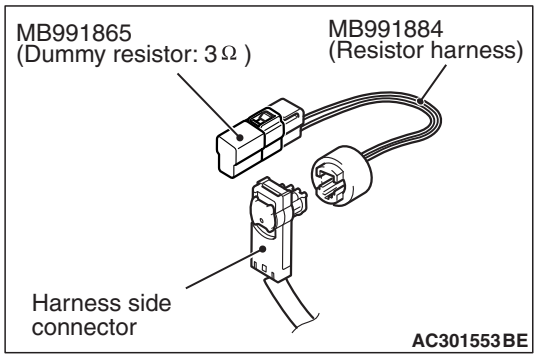

(3) Connect special tool MB991865 to special tool MB991884.
(4) Connect special tool MB991884 to the D-130 harness side connector.
(5) Connect the negative battery terminal.
(6) Erase diagnostic trouble code memory, and then check the diagnostic trouble code.

Q: Is DTC B1C49 set?

YES : Go to Step 4.

NO : Replace the passenger's seat belt with pre-tensioner (Refer to P.52B-461). Then go to Step 5.

STEP 4. Check the harness for open circuit between SRS-ECU connector C-27 (terminal No.43 and 44) and the passenger's seat belt pre-tensioner connector D-130 (terminal No.2 and 1).

(1) Disconnect the negative battery terminal.

(2) While pushing the part "A" indicated in the figure of the harness side connector, turn the lock lever to the direction of the arrow to release the lock lever, and disconnect the C-27 SRS-ECU connector.

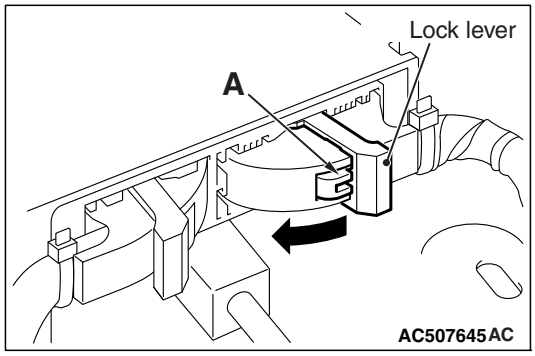

⚠ *DANGER*

To prevent the seat belt pre-tensioner from deploying unintentionally, disconnect the passenger's seat belt pre-tensioner connector D-130 to short the squib circuit.

(3) Disconnect SRS-ECU connector C-27 and passenger's seat belt pre-tensioner connector D-130. For connector D-130, use a flat-tipped screwdriver to unlock the locking button at the harness side connector by withdrawing it toward you in two stages, and then disconnect the connector.

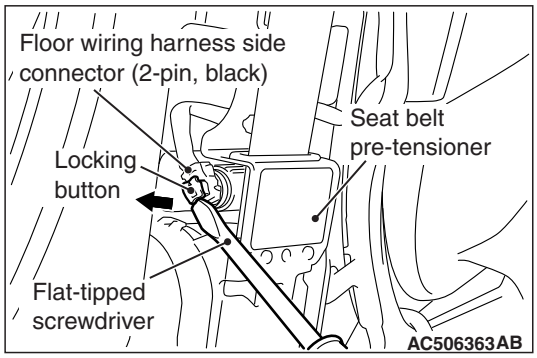

⚠ CAUTION

Insert an insulator such as a cable tie to a depth of 4mm (0.16 inch) or more, otherwise the short spring will not be released.

(4) Insert a cable tie [3 mm (0.12 inch) wide, 0.5 mm (0.02 inch) thick] between terminals 43, 44 and the short spring to release the short spring.

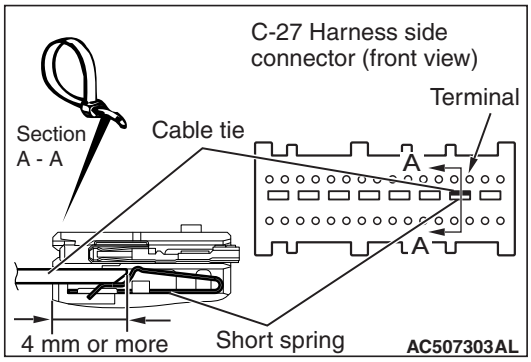

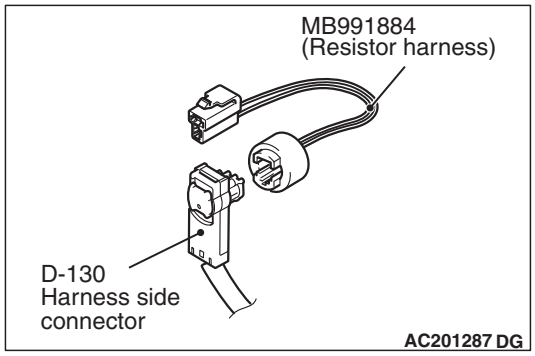

(5) Connect D-130 harness side connector to special tool MB991884.

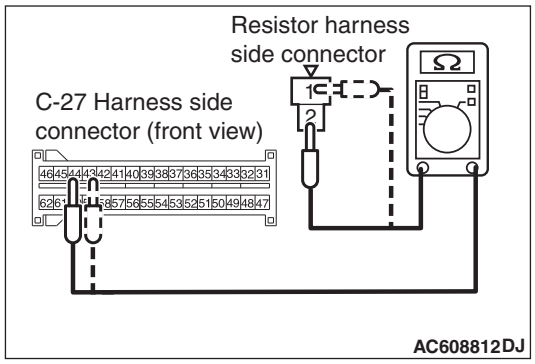

(6) Check for continuity between the following terminals. It should be less than 2 ohms.
- SRS-ECU connector C-27 (terminal No.43) and the special tool (terminal No.1)
- SRS-ECU connector C-27 (terminal No.44) and the special tool (terminal No.2)

Q: Does continuity exist?

YES : Erase the diagnostic trouble code memory, and check the diagnostic trouble code. If DTC B1C49 sets, replace the SRS-ECU (Refer to P.52B-440). Then go to Step 5.

NO : Repair the harness wires between SRS-ECU connector C-27 passenger's seat belt pre-tensioner connector D-130. Then go to Step 5.

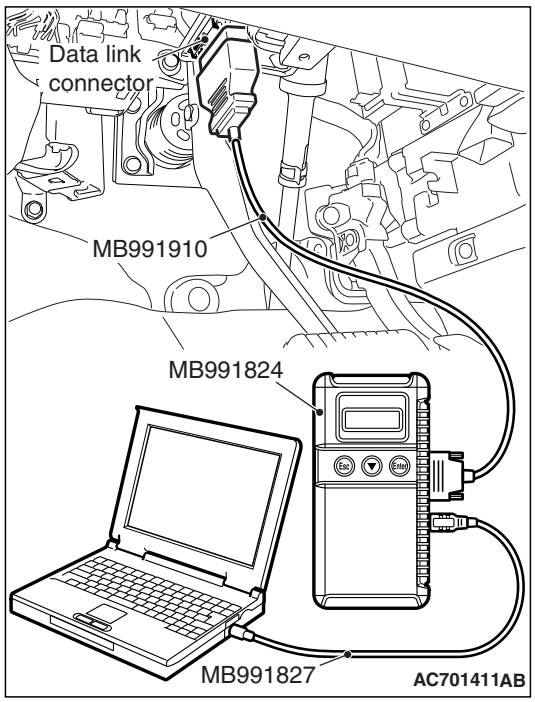

STEP 5. Recheck for diagnostic trouble code.

Check again if the DTC is set.

(1) Erase the DTC.
(2) Turn the ignition switch to the "ON" position.
(3) Check if the DTC is set.
(4) Turn the ignition switch to the "LOCK" (OFF) position.

Q: Is DTC B1C49 set?

YES : Return to Step 1.

NO : The procedure is complete.

DTC B1C4A: Front Passenger's Seat Belt Pre-tensioner (Squib) System (Short Circuit Between Squib Circuit Terminals)

Seat Belt Pre-Tensioner (passenger's side) (Squib) Circuit

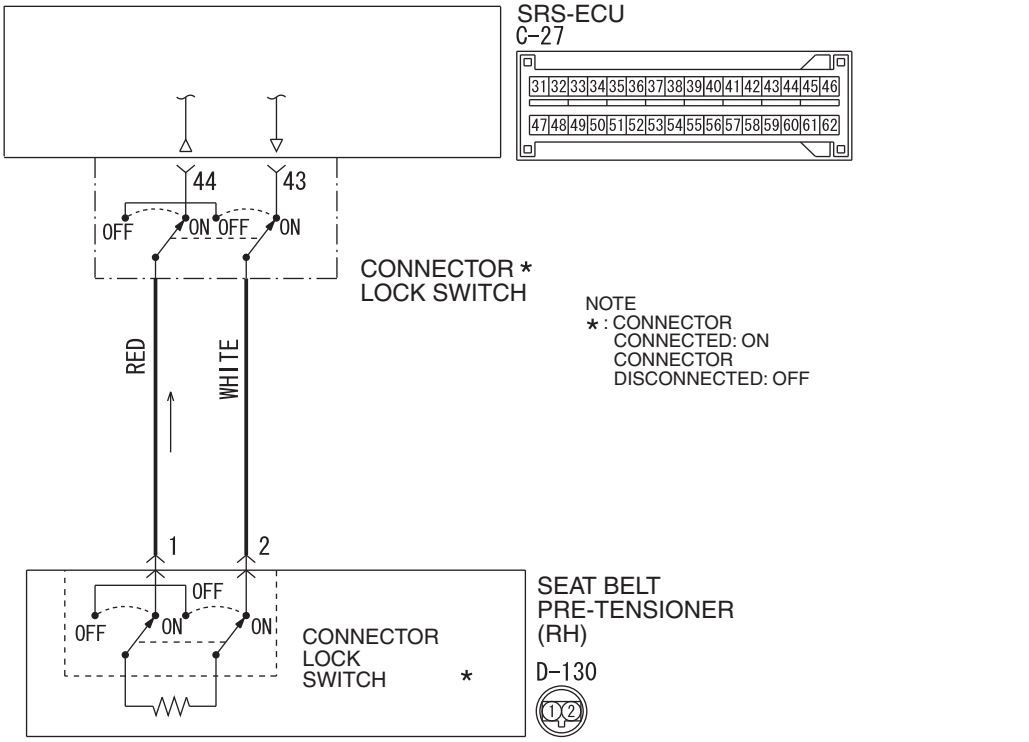

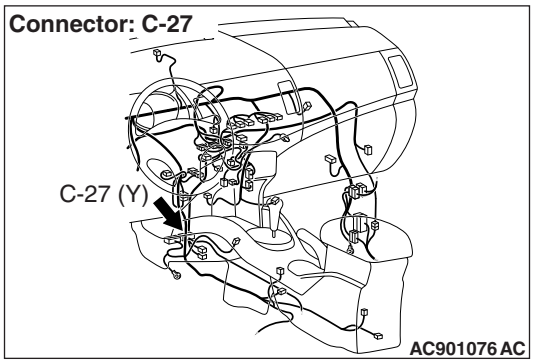

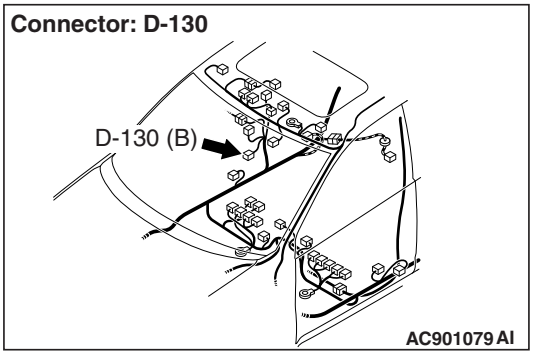

⚠ CAUTION

If DTC B1C4A is set in the SRS-ECU, always diagnose the CAN main bus line.

CIRCUIT OPERATION

The SRS-ECU judges how severe a collision is by detecting signals from the front impact sensors and the front air bag analog G-sensor. If the impact is over a predetermined level, the SRS-ECU sends an ignition signal. At this time, if the front air bag safing G-sensor is on, the pre-tensioner will deploy.

DTC SET CONDITIONS

This DTC is set if there is abnormal resistance between the input terminals of the passenger's seat belt pre-tensioner (squib).

TROUBLESHOOTING HITS

- Improper engaged connector or defective short spring*
- Short circuit between the passenger's seat belt pre-tensioner (squib) circuit terminals
- Damaged connector(s)
- Malfunction of the SRS-ECU

TSB Revision

*NOTE: *: The squib circuit connectors integrate a "short" spring (which prevents the seat belt pre-tensioner from deploying unintentionally due to static electricity by shorting the positive wire to the ground wire in the squib circuit when the connectors are disconnected) (Refer to P.52B-3). Therefore, if connector C-27 or D-130 is damaged or improperly engaged, the short spring may not be released when the connector is connected.*

DIAGNOSIS

Required Special Tools:

- MB991958: Scan Tool (M.U.T.-III Sub Assembly)
  - MB991824: Vehicle Communication Interface (V.C.I.)
  - MB991827: M.U.T.-III USB Cable
  - MB991910: M.U.T.-III Main Harness A (Vehicles with CAN Communication System)
- MB991865: Dummy resistor
- MB991884: Resister harness

STEP 1. Using scan tool MB991958, diagnose the CAN bus line.

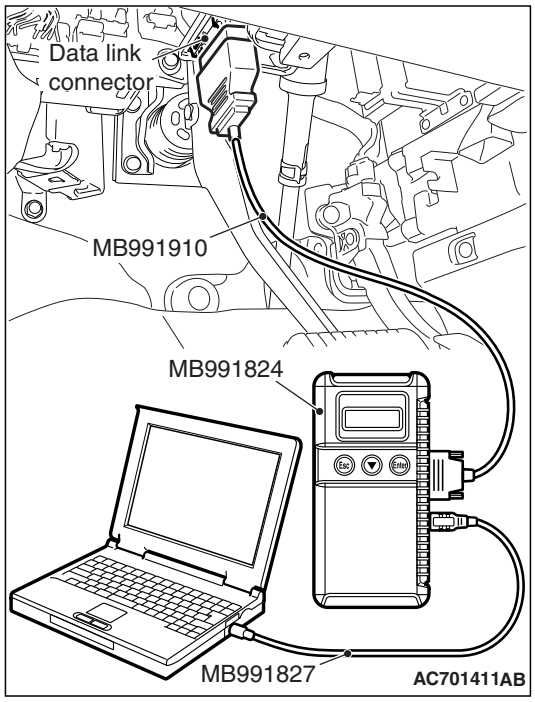

⚠ CAUTION

To prevent damage to scan tool MB991958, always turn the ignition switch to the "LOCK" (OFF) position before connecting or disconnecting scan tool MB991958.

(1) Connect scan tool MB991958. Refer to "How to connect the scan tool P.52B-28."
(2) Turn the ignition switch to the "ON" position.
(3) Diagnose the CAN bus line.
(4) Turn the ignition switch to the "LOCK" (OFF) position.

Q: Is the CAN bus line found to be normal?

YES : Go to Step 2.
NO : Repair the CAN bus line (Refer to GROUP 54C, Diagnosis P.54C-17).

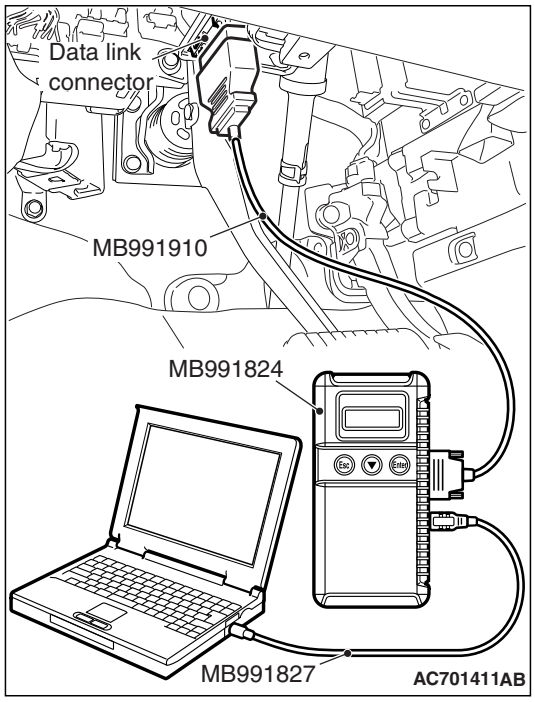

STEP 2. Recheck for diagnostic trouble code.

Check again if the DTC is set.

(1) Erase the DTC.
(2) Turn the ignition switch to "ON" position.
(3) Check if the DTC is set.
(4) Turn the ignition switch to the "LOCK" (OFF) position.

Q: Is the DTC set?

YES : Go to Step 3.

NO : There is an intermittent malfunction such as poor engaged connector(s) or open circuit (Refer to GROUP 00, How to Cope with Intermittent Malfunction P.00-15).

STEP 3. Check SRS-ECU connector C-27 and passenger's seat belt pre-tensioner connector D-130. (Using scan tool MB991958, read the diagnostic trouble code.)

(1) Disconnect the negative battery terminal.
(2) While pushing the part "A" indicated in the figure of the harness side connector, turn the lock lever to the direction of the arrow to release the lock lever, and disconnect the C-27 SRS-ECU connector. Then connect the connector.

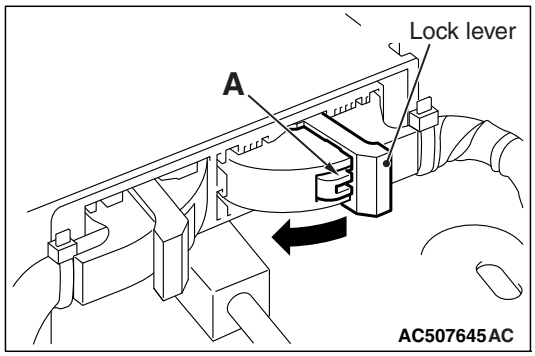

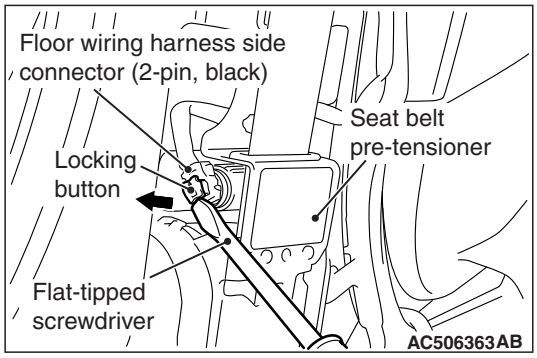

(3) After disconnecting the D-130 harness side connectors, connect the connectors again. For the D-130 connector disconnection, use a flat-tipped screwdriver to unlock the locking button at the harness side connector by withdrawing it toward you in two stages, and then disconnect the connector.
(4) Connector the negative battery terminal.
(5) Erase the diagnostic trouble code memory, and check the diagnostic trouble code.

Q: Is DTC B1C4A set?

YES : Go to Step 4.

NO : The procedure is complete. It is assumed that DTC B1C4A set because connector C-27 or D-130 was engaged improperly.

STEP 4. Check the passenger's seat belt pre-tensioner. (Using scan tool MB991958, read the diagnostic trouble code.)

(1) Disconnect the negative battery terminal.

(2) While pushing the part "A" indicated in the figure of the harness side connector, turn the lock lever to the direction of the arrow to release the lock lever, and disconnect the C-27 SRS-ECU connector.

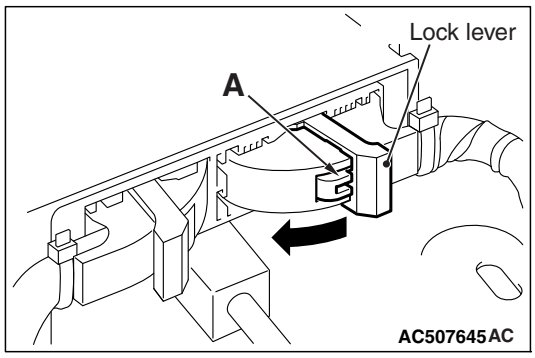

(3) Disconnect passenger's seat belt pre-tensioner connector D-130. Use a flat-tipped screwdriver to unlock the locking button at the harness side connector by withdrawing it toward you in two stages, and then disconnect the connector.

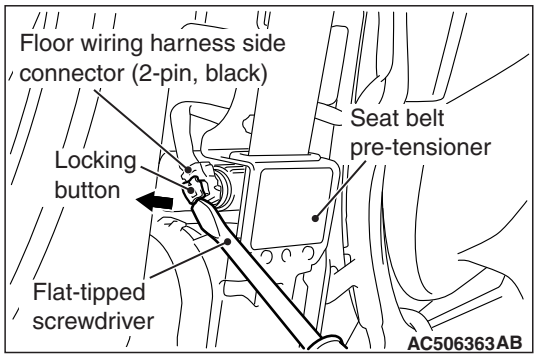

(4) Connect special tool MB991865 to special tool MB991884.

(5) Connect special tool MB991884 to the D-130 harness side connector.

(6) Connect the negative battery terminal.

(7) Erase diagnostic trouble code memory, and then check the diagnostic trouble code.

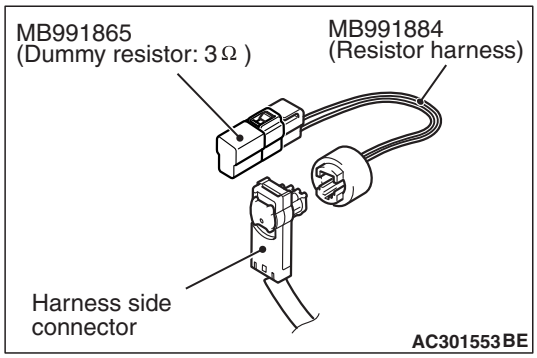

Q: Is DTC B1C4A set?

YES : Go to Step 5.

NO : Replace the passenger's seat belt with pre-tensioner (Refer to P.52B-461). Then go to Step 7.

STEP 5. Check the passenger's seat belt pre-tensioner circuit. Measure the resistance at the SRS-ECU connector C-27.

(1) Disconnect the negative battery terminal.

(2) While pushing the part "A" indicated in the figure of the harness side connector, turn the lock lever to the direction of the arrow to release the lock lever, and disconnect the C-27 SRS-ECU connector.

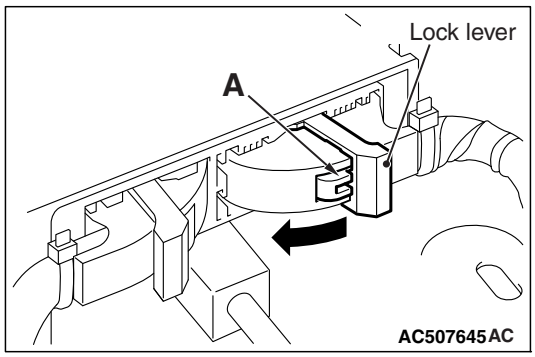

⚠ DANGER

To prevent the seat belt pre-tensioner from deploying unintentionally, disconnect the passenger's seat belt pre-tensioner connector D-130 to short the squib circuit.

(3) Disconnect passenger's seat belt pre-tensioner connector D-130. Use a flat-tipped screwdriver to unlock the locking button at the harness side connector by withdrawing it toward you in two stages, and then disconnect the connector.

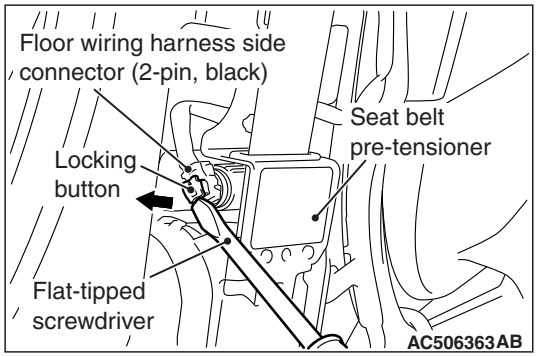

⚠ CAUTION

Insert an insulator such as a cable tie to a depth of 4mm (0.16 inch) or more, otherwise the short spring will not be released.

(4) Insert a cable tie [3 mm (0.12 inch) wide, 0.5 mm (0.02 inch) thick] between terminals 43, 44 and the short spring to release the short spring.

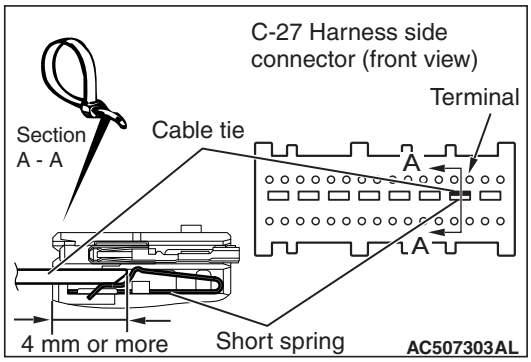

(5) Check for continuity between C-27 harness side connector terminals 43 and 44.
It should be an open circuit.

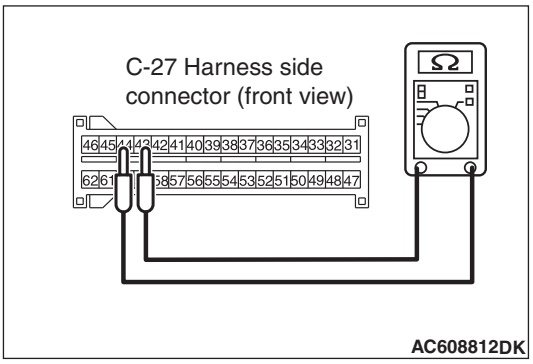

Q: Is it open circuit?

YES : Erase the diagnostic trouble code memory, and check diagnostic trouble code. If DTC B1C4A set, replace the SRS-ECU (Refer to P.52B-440). Then go to Step 7.

NO : Go to Step 6.

STEP 6. Check the harness for short circuit between SRS-ECU connector C-27 (terminal No.43 and 44) and passenger's seat belt pre-tensioner connector D-130 (terminal No.2 and 1).

Q: Is the check result normal?

YES : Go to Step 7.

NO : Repair the harness wires between SRS-ECU connector C-27 and passenger's seat belt pre-tensioner connector D-130. Then go to Step 7.

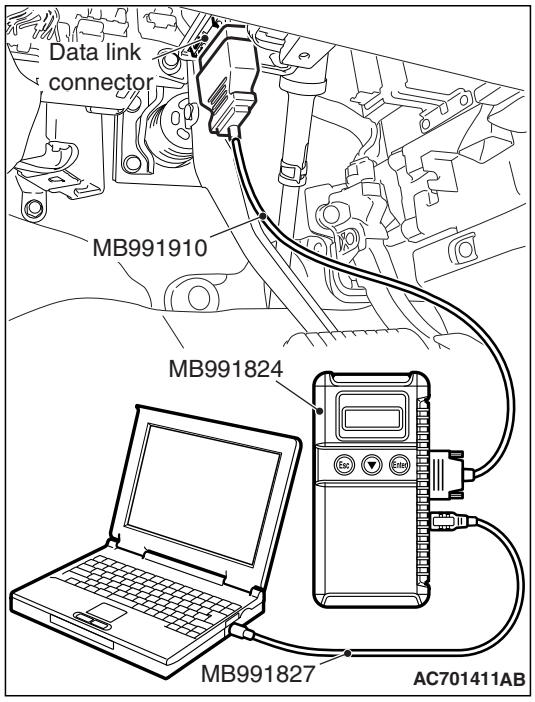

STEP 7. Recheck for diagnostic trouble code.

Check again if the DTC is set.

(1) Erase the DTC.

(2) Turn the ignition switch to the "ON" position.

(3) Check if the DTC is set.

(4) Turn the ignition switch to the "LOCK" (OFF) position.

Q: Is DTC B1C4A set?

YES : Return to Step 1.

NO : The procedure is complete.

DTC B210D: Battery Abnormal Low Voltage

IG1 Power Supply Circuit

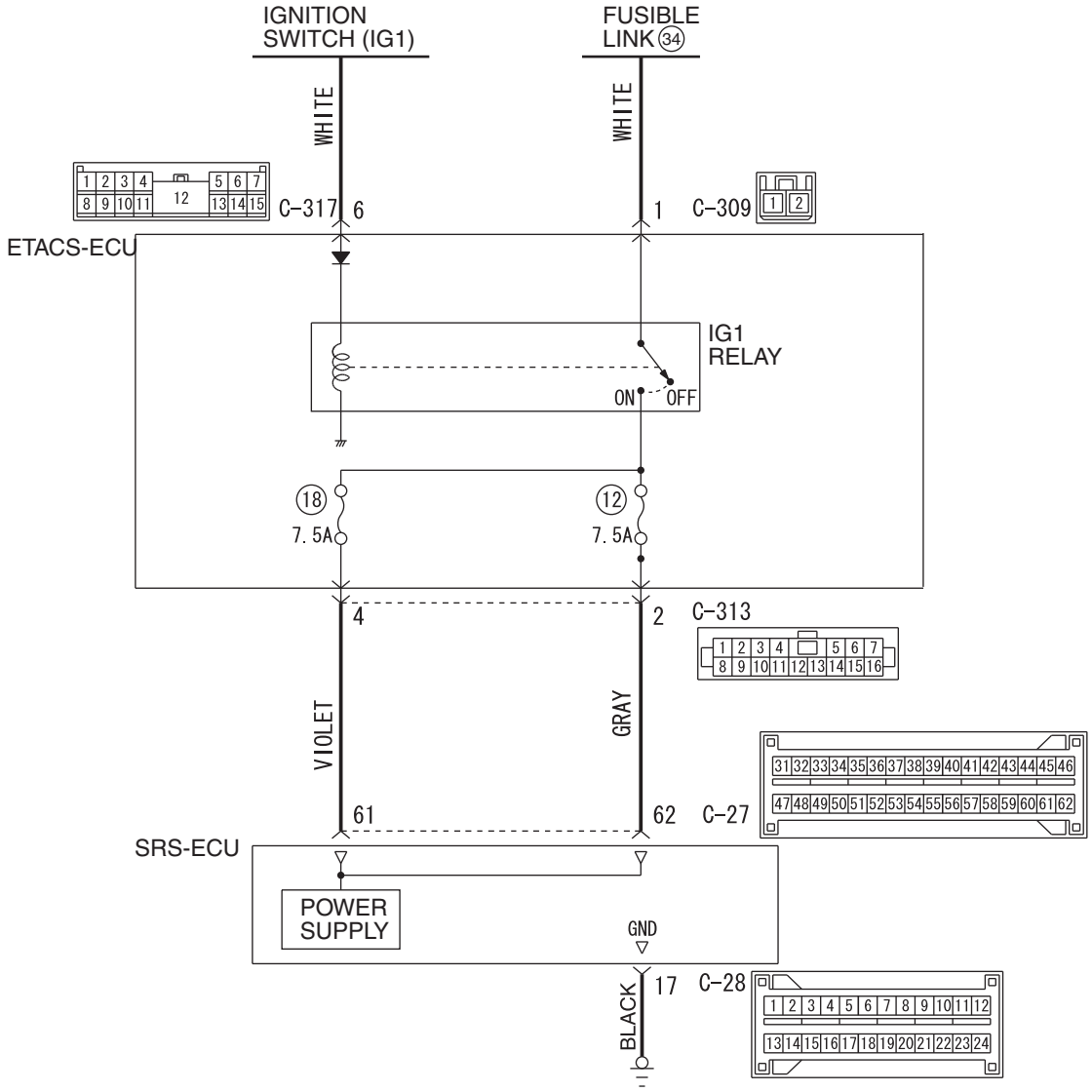

AC803172 AB

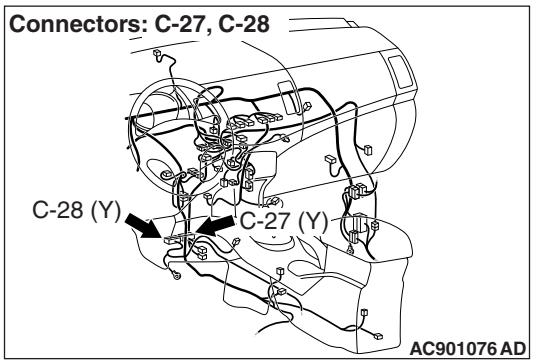

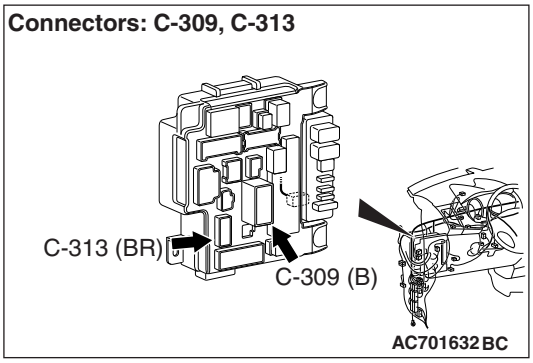

⚠ CAUTION

If the diagnostic trouble code B210D is set in the SRS-ECU, always diagnose the CAN main bus line.

CIRCUIT OPERATION

- The SRS-ECU is powered from the fusible link (34).

TSB Revision

- The SRS-ECU power is supplied from two circuits. Even if one circuit is shut off, the air bag can inflate.

DTC SET CONDITIONS

The code is set when the battery voltage becomes low or when the open circuit occurs to the power supply circuit.

TROUBLESHOOTING HINTS

- Battery voltage low voltage
- Open circuit to power supply circuit
- Damaged wiring harnesses or connectors
- Malfunction of the SRS-ECU
- Malfunction of ETACS-ECU

DIAGNOSIS

Required Special Tools:

- MB991958: Scan Tool (M.U.T.-III Sub Assembly)
  - MB991824: Vehicle Communication Interface (V.C.I.)
  - MB991827: M.U.T.-III USB Cable
  - MB991910: M.U.T.-III Main Harness A (Vehicles with CAN communication system)

STEP 1. Power supply fuse number 12, 18 check.

Q: Is the fuse in good condition?

YES : Go to Step 3.
NO : Go to Step 2.

STEP 2. Wiring harness check between the C-313 ETACS-ECU connector terminal No. 4/2 and the C-27 SRS-ECU connector terminal No. 61/62.

- Short circuit check for SRS-ECU power supply wire

Q: Is the check result normal?

YES : Replace the power supply fuse.
NO : Repair the wiring harness. And than replace the power supply fuse.

STEP 3. Battery check.

Refer to GROUP 54A, Battery Test P.54A-8.

Q: Is the check result normal?

YES : Go to Step 4.
NO : Charge or replace the battery.

STEP 4. Measure the voltage at the ETACS-ECU connector.

(1) Disconnect the C-309 ETACS-ECU connector.
(2) Measure the voltage between the C-309 harness side connector terminal No. 1 and the body ground.
  - The voltage should measure 12 volts (battery positive voltage).

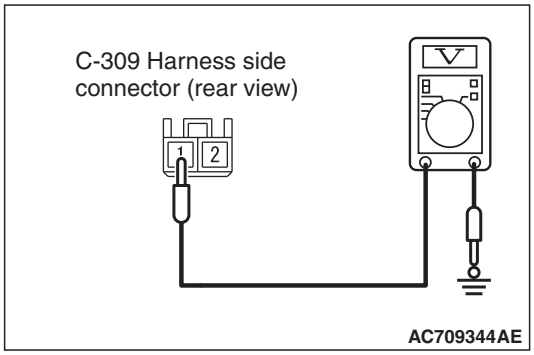

Q: Is the measured voltage approximately 12 volts (battery positive voltage)?

YES : Go to Step 6.
NO : Go to Step 5.

STEP 5. Wiring harness check between the fusible link (34) and the C-309 ETACS-ECU connector terminal No. 1.

- Open circuit check for ETACS-ECU power supply wire

Q: Is the check result normal?

YES : Go to Step 10.
NO : Repair the wiring harness.

STEP 6. Using scan tool MB991958, diagnose the ETACS.

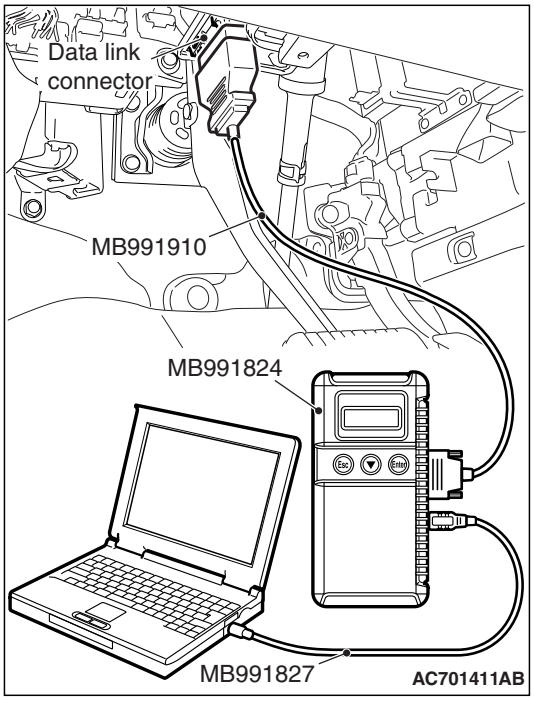

⚠ CAUTION

To prevent damage to scan tool MB991958, always turn the ignition switch to the "LOCK" (OFF) position before connecting or disconnecting scan tool MB991958.

(1) Connect scan tool MB991958. Refer to "How to connect the scan tool P.52B-28."
(2) Erase the DTC.
(3) Turn the ignition switch to the "ON" position.
(4) Check if the DTC is set.
(5) Turn the ignition switch to the "LOCK" (OFF) position.

Q: Is the DTC set?

YES : Diagnose the ETACS (Refer to GROUP 54A, ETACS, Diagnosis P.54A-742).
NO : Check the input signal of ETACS-ECU ignition switch (IG1) (Refer to GROUP 54A –ETACS, Symptom procedures P.54A-800). Than go to step 7.

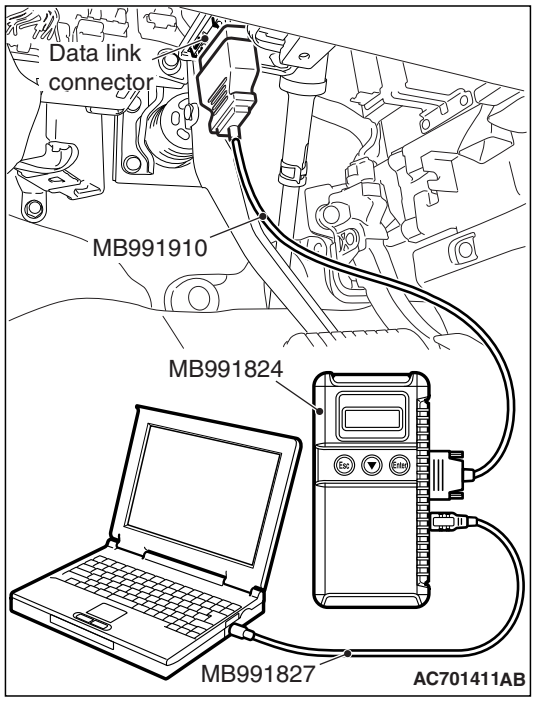

STEP 7. Using scan tool MB991958, diagnose the CAN bus line.

⚠ CAUTION

To prevent damage to scan tool MB991958, always turn the ignition switch to the "LOCK" (OFF) position before connecting or disconnecting scan tool MB991958.

(1) Connect scan tool MB991958. Refer to "How to connect the scan tool P.52B-28."
(2) Turn the ignition switch to the "ON" position.
(3) Diagnose the CAN bus line.
(4) Turn the ignition switch to the "LOCK" (OFF) position.

Q: Is the CAN bus line found to be normal?

YES : Go to Step 8.
NO : Repair the CAN bus line (Refer to GROUP 54C, Diagnosis P.54C-17).

STEP 8. Recheck for diagnostic trouble code.

Check again if the DTC is set.
(1) Erase the DTC.
(2) Turn the ignition switch to "ON" position.
(3) Check if the DTC is set.
(4) Turn the ignition switch to the "LOCK" (OFF) position.

Q: Is the DTC set?

YES : Go to Step 9.
NO : There is an intermittent malfunction such as poor engaged connector(s) or open circuit (Refer to GROUP 00, How to Cope with Intermittent Malfunction P.00-15).

STEP 9. Check the harness for open circuit between SRS-ECU connector C-27 (terminal No.61 and 62) and the ETACS-ECU connector C-313 (terminal No.4 and 2).

(1) Disconnect the negative battery terminal.
(2) While pushing the part "A" indicated in the figure of the harness side connector, turn the lock lever to the direction of the arrow to release the lock lever, and disconnect the C-27 SRS-ECU connector.
(3) Disconnect the ETACS-ECU connector C-313.

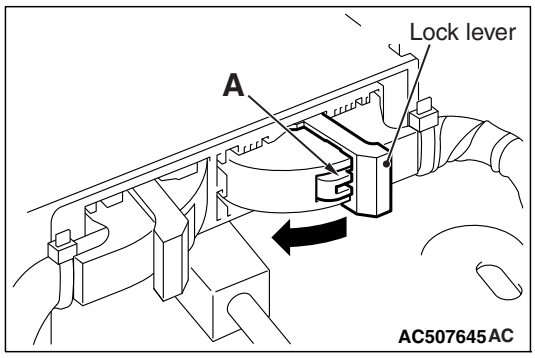

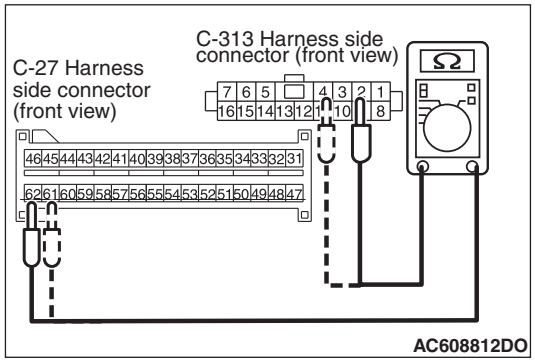

(4) Check for continuity between the following terminals. It should be less than 2 ohms.

<Fuse No.12>
- SRS-ECU connector C-27 (terminal No.62) and the ETACS-ECU connector C-313 (terminal No.2)

<Fuse No.18>
- SRS-ECU connector C-27 (terminal No.61) and the ETACS-ECU connector C-313 (terminal No.4)

Q: Does continuity exist?

YES : Go to Step 10.
NO : Repair the harness wire between SRS-ECU connector C-27 and the ETACS-ECU connector C-313.

STEP 10. Measure the voltage at the C-27 SRS-ECU connector.

(1) Disconnect the negative battery terminal.
(2) While pushing the part "A" indicated in the figure of the harness side connector, turn the lock lever to the direction of the arrow to release the lock lever, and disconnect the C-27 SRS-ECU connector.
(3) Connect the negative battery terminal.
(4) Ignition switch: ON

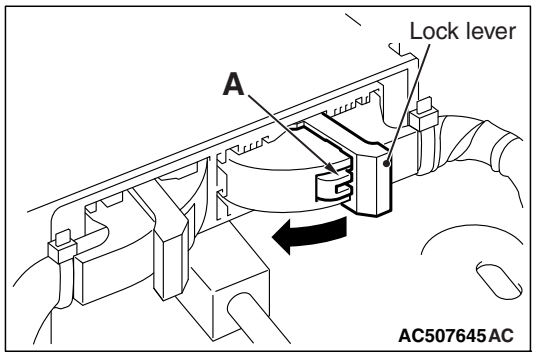

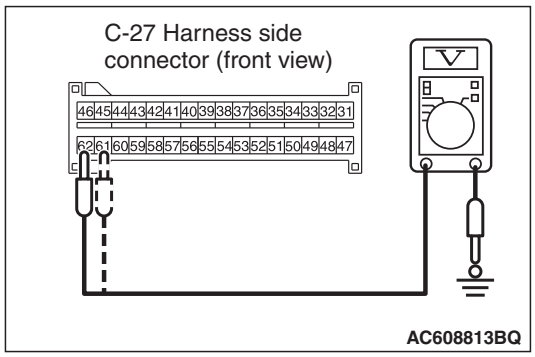

(5) Take the measurements below at the C-27 harness side connector.
- Voltage between terminal No. 61/62 and body ground

OK: 9 V or more

Q: Is the measured voltage within the specified range?

YES : Go to Step 11.

NO : Replace the ETACS-ECU (Refer to GROUP 54A, ETACS-ECU P.54A-841).

STEP 11. Recheck for diagnostic trouble code.

Check again if the DTC is set.

(1) Erase the DTC.
(2) Turn the ignition switch to the "ON" position.
(3) Check if the DTC is set.
(4) Turn the ignition switch to the "LOCK" (OFF) position.

Q: Is DTC B210D set?

YES : Replace the SRS-ECU (Refer to P.52B-440).

NO : There is an intermittent malfunction such as poor engaged connector(s) or open circuit (Refer to GROUP 00, How to Cope with Intermittent Malfunction P.00-15).

DTC B212C: Open Circuit to IG1 Power Supply (Fuse No.12 Circuit)
DTC B212D: Open Circuit to IG1 Power Supply (Fuse No.18 Circuit)

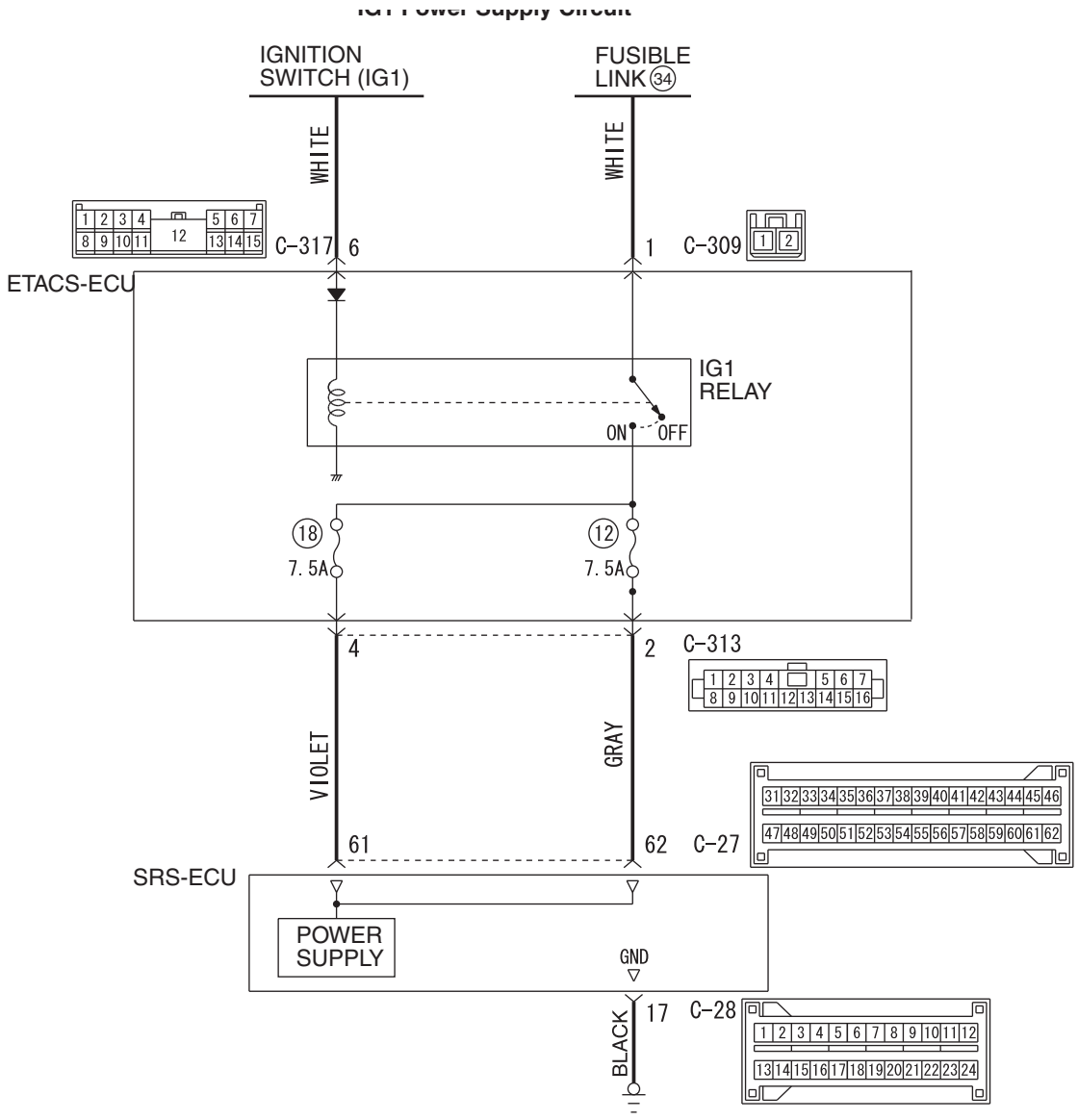

AC803172 AB

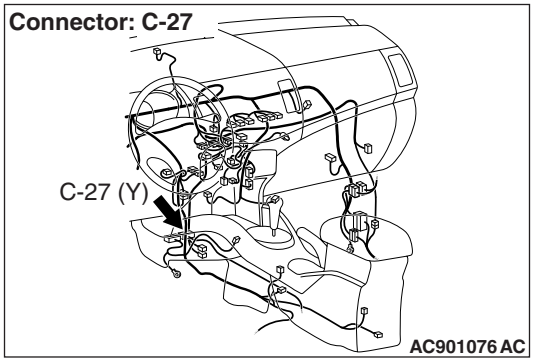

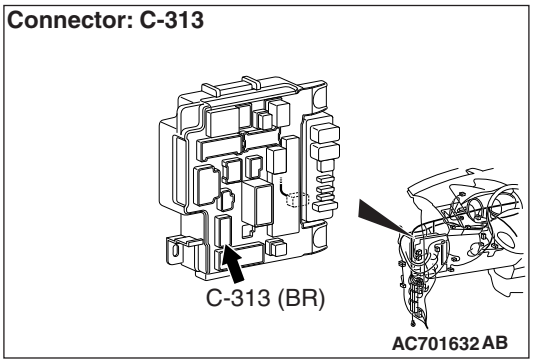

⚠ CAUTION

If DTC B212C (Fuse No.12) or B212D (Fuse No.18) is set in the SRS-ECU, always diagnose the CAN main bus lines.

TSB Revision

CIRCUIT OPERATION

- The SRS-ECU is powered from the fusible link (34).
- The SRS-ECU power is supplied from two circuits. Even if one circuit is shut off, the air bag can inflate.

DTC SET CONDITIONS

This code is set when an open circuit occurs in the power supply circuit to the SRS-ECU (terminal No.61) or in the power supply circuit to the SRS-ECU (terminal No.62). Also, if the code No. B212C and B212D are set at the same time, the battery voltage may have dropped. Therefore, check the battery first.

TROUBLESHOOTING HINTS

- Open circuit to power supply circuit
- Damaged wiring harnesses or connectors
- Malfunction of the SRS-ECU
- Malfunction of ETACS-ECU

DIAGNOSIS

Required Special Tools:

- MB991958: Scan Tool (M.U.T.-III Sub Assembly)
  - MB991824: Vehicle Communication Interface (V.C.I.)
  - MB991827: M.U.T.-III USB Cable
  - MB991910: M.U.T.-III Main Harness A (Vehicles with CAN communication system)

STEP 1. Power supply fuse number 12,18 check.

Q: Is the fuse in good condition?

YES : Go to Step 3.
NO : Go to Step 2

STEP 2. Check for a blown fuse.

(1) Replace the fuse.
(2) Turn the ignition switch to the "ON" position, wait for at least one minute and then turn the switch off.
(3) Check the fuse.

Q: Is the fuse in good condition?

YES : Go to Step 3.
NO : Repair the wiring harness between the C-313 ETACS-ECU connector terminal No. 4/2 and the C-27 SRS-ECU connector terminal No. 61/62, and replace the power supply fuse.

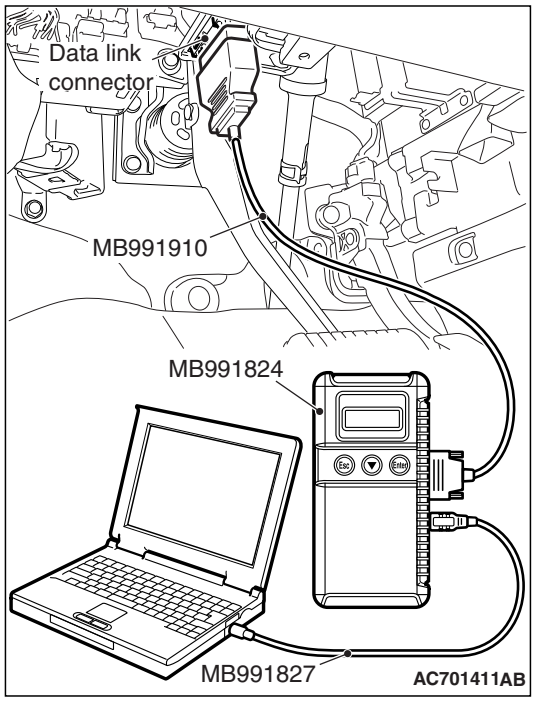

STEP 3. Using scan tool MB991958, diagnose the CAN bus line.

⚠ CAUTION

To prevent damage to scan tool MB991958, always turn the ignition switch to the "LOCK" (OFF) position before connecting or disconnecting scan tool MB991958.

(1) Connect scan tool MB991958. Refer to "How to connect the scan tool P.52B-28."
(2) Turn the ignition switch to the "ON" position.
(3) Diagnose the CAN bus line.
(4) Turn the ignition switch to the "LOCK" (OFF) position.

Q: Is the CAN bus line found to be normal?

YES : Go to Step 4.
NO : Repair the CAN bus line (Refer to GROUP 54C, Diagnosis P.54C-17).

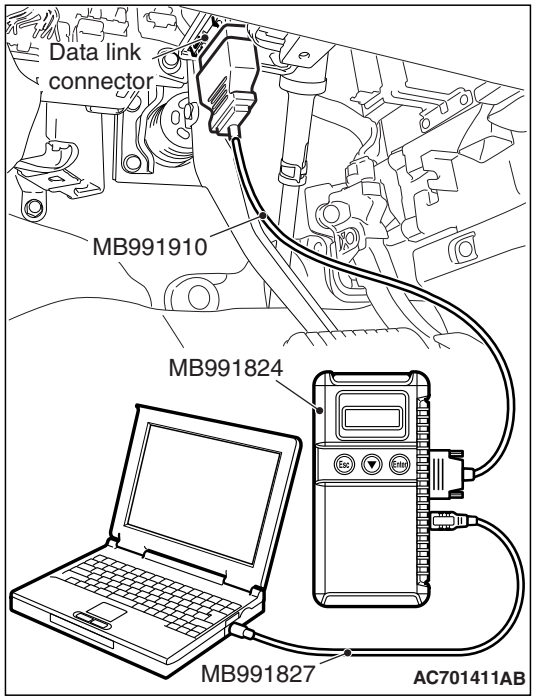

STEP 4. Using scan tool MB991958, diagnose the ETACS.

⚠ CAUTION

To prevent damage to scan tool MB991958, always turn the ignition switch to the "LOCK" (OFF) position before connecting or disconnecting scan tool MB991958.

(1) Connect scan tool MB991958. Refer to "How to connect the scan tool P.52B-28."
(2) Turn the ignition switch to the "ON" position.
(3) Check if the DTC is set.
(4) Turn the ignition switch to the "LOCK" (OFF) position.

Q: Is the DTC set?

YES : Diagnose the ETACS, (Refer to GROUP 54A, ETACS, Diagnosis P.54A-742.
NO : Check the input signal of ETACS-ECU ignition switch (IG1) (Refer to GROUP 54A –ETACS, Symptom procedures P.54A-800). Than go to step 5.

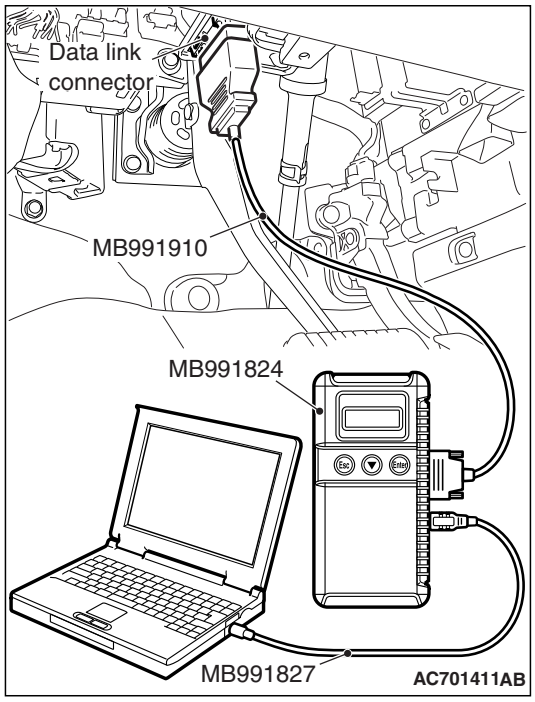

STEP 5. Recheck for diagnostic trouble code.

Check again if the DTC is set.

(1) Erase the DTC.
(2) Turn the ignition switch to "ON" position.
(3) Check if the DTC is set.
(4) Turn the ignition switch to the "LOCK" (OFF) position.

Q: Is the DTC set?

YES : Go to Step 6.

NO : There is an intermittent malfunction such as poor engaged connector(s) or open circuit (Refer to GROUP 00, How to Cope with Intermittent Malfunction P.00-15).

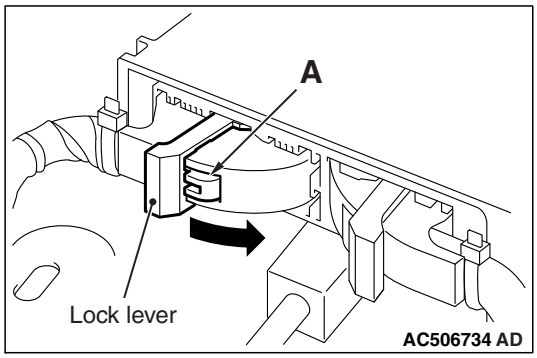

STEP 6. Resistance measurement at the C-28 SRS-ECU connector.

(1) While pushing the part "A" indicated in the figure of the harness side connector, turn the lock lever to the direction of the arrow to release the lock lever, and disconnect the C-28 SRS-ECU connectors.

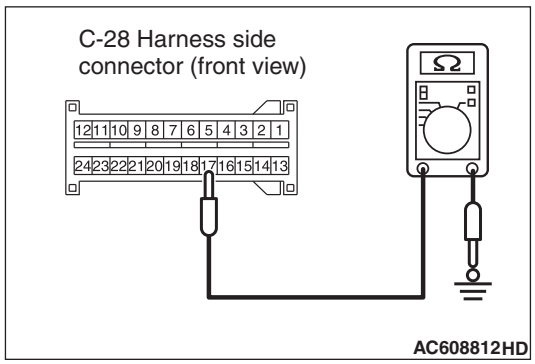

(2) Take the measurements below at the C-28 wiring harness side connectors. It should be less than 2 ohms.
- Continuity between C-28 wiring harness side connector terminal No. 17 and body ground

Q: Does continuity exist?

YES : Go to Step 7.

NO : Repair the wiring harness between the C-28 SRS-ECU connector terminal No. 17 and the ground.

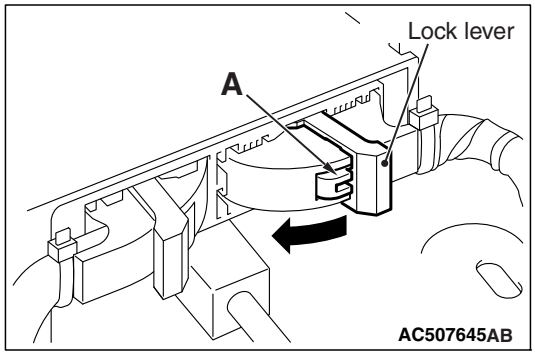

STEP 7. Measure the voltage at the C-27 SRS-ECU connector.

(1) Disconnect the negative battery terminal.
(2) While pushing the part "A" indicated in the figure of the harness side connector, turn the lock lever to the direction of the arrow to release the lock lever, and disconnect the C-27 SRS-ECU connector.
(3) Connect the negative battery terminal.
(4) Ignition switch: ON

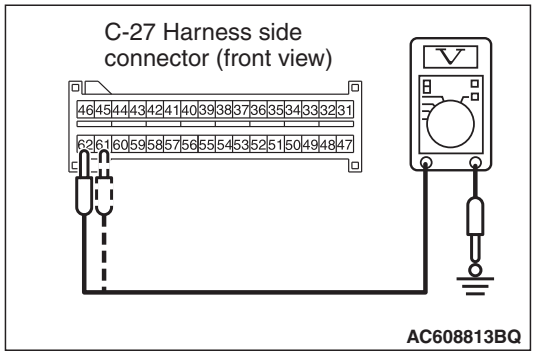

(5) Take the measurements below at the C-27 harness side connector.
- Voltage between terminal No. 61/62 and body ground

  OK: 9 V or more

Q: Is the measured voltage within the specified range?

YES : Go to Step 9.
NO : Go to Step 8.

STEP 8. Check the harness for open circuit between SRS-ECU connector C-27 (terminal No.61 and 62) and the ETACS-ECU connector C-313 (terminal No.4 and 2).

(1) Disconnect the negative battery terminal.
(2) While pushing the part "A" indicated in the figure of the harness side connector, turn the lock lever to the direction of the arrow to release the lock lever, and disconnect the C-27 SRS-ECU connector.
(3) Disconnect the ETACS-ECU connector C-313.

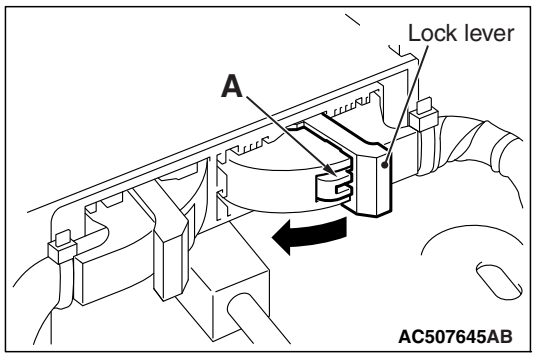

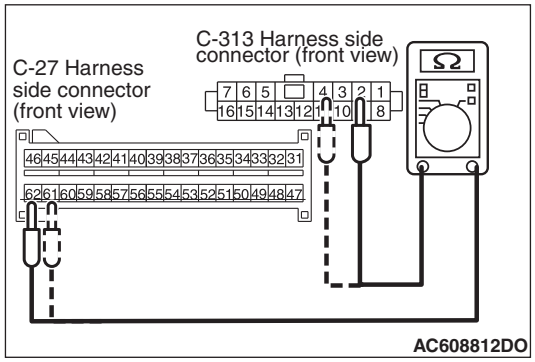

(4) Check for continuity between the following terminals. It should be less than 2 ohms.

<Fuse No.12>
- SRS-ECU connector C-27 (terminal No.62) and the ETACS-ECU connector C-313 (terminal No.2)

<Fuse No.18>
- SRS-ECU connector C-27 (terminal No.61) and the ETACS-ECU connector C-313 (terminal No.4)

Q: Does continuity exist?

YES : Replace the ETACS-ECU (Refer to GROUP 54A, ETACS-ECU P.54A-841).

NO : Repair the harness wire between SRS-ECU connector C-27 and the ETACS-ECU connector C-313.

STEP 9. Recheck for diagnostic trouble code.

Check again if the DTC is set.
(1) Erase the DTC.
(2) Turn the ignition switch to the "ON" position.
(3) Check if the DTC is set.
(4) Turn the ignition switch to the "LOCK" (OFF) position.

Q: Is DTC B212C <Fuse No.12 circuit> or B212D <Fuse No.18 circuit> set?

YES : Replace the SRS-ECU (Refer to P.52B-440).

NO : There is an intermittent malfunction such as poor engaged connector(s) or open circuit (Refer to GROUP 00, How to Cope with Intermittent Malfunction P.00-15).

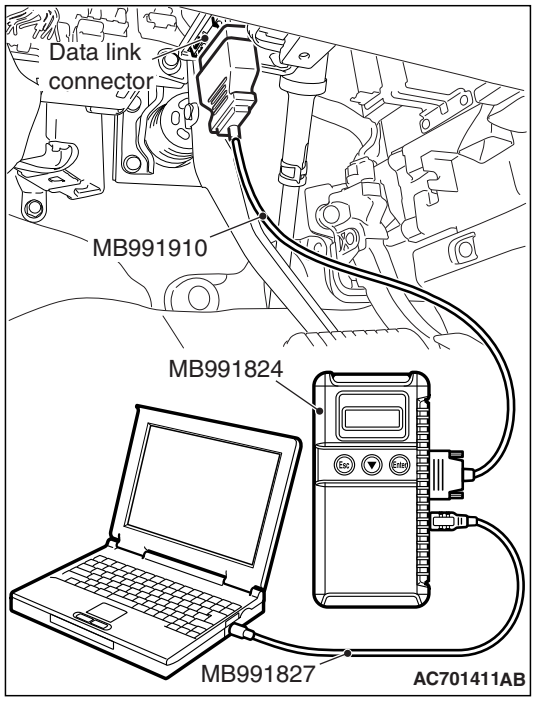

DTC B2207: Occupant Restraint Controller Internal 1
DTC B2208: Occupant Restraint Controller Internal 2
DTC B2209: Occupant Restraint Controller Internal 3
DTC B220A: Occupant Restraint Controller Internal 4
DTC B220B: Occupant Restraint Controller Firing Stored Energy
DTC B220C: Occupant Restraint Controller Accelerometer 1
DTC B220D: Occupant Restraint Controller Accelerometer 2

⚠ CAUTION
If DTCs are set in the SRS-ECU, always diagnose the CAN main bus line.

DTC SET CONDITION

The above DTC is set if an abnormality is detected in the circuit inside the SRS-ECU.

TROUBLESHOOTING HINTS

Malfunction of the SRS-ECU

DIAGNOSIS

Required Special Tools:

- MB991958: Scan Tool (M.U.T.-III Sub Assembly)
  - MB991824: Vehicle Communication Interface (V.C.I.)
  - MB991827: M.U.T.-III USB Cable
  - MB991910: M.U.T.-III Main Harness A (Vehicles with CAN communication system)

STEP 1. Using scan tool MB991958, diagnose the CAN bus line

⚠ CAUTION
To prevent damage to scan tool MB991958, always turn the ignition switch to the "LOCK" (OFF) position before connecting or disconnecting scan tool MB991958.

(1) Connect scan tool MB991958. Refer to "How to connect the scan tool P.52B-28."
(2) Turn the ignition switch to the "ON" position.
(3) Diagnose the CAN bus line.
(4) Turn the ignition switch to the "LOCK" (OFF) position.

Q: Is the CAN bus line found to be normal?

YES : Go to Step 2.
NO : Repair the CAN bus line (Refer to GROUP 54C, Diagnosis P.54C-17).

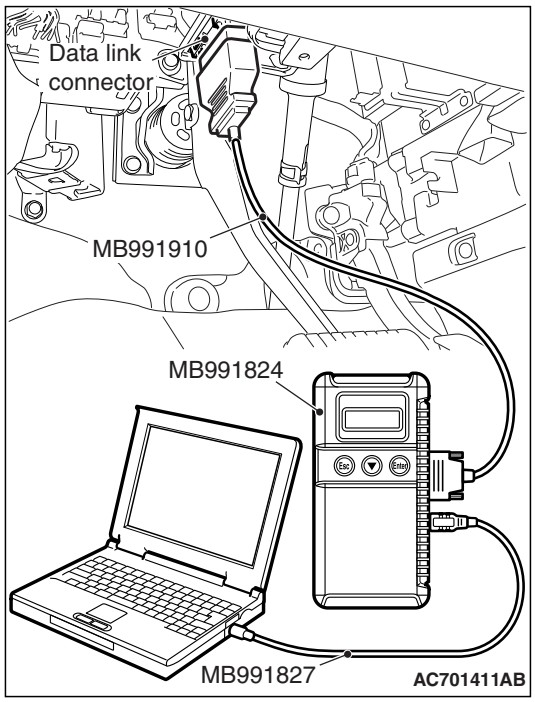

STEP 2. Recheck for diagnostic trouble code.

Check again if the DTC is set.
(1) Turn the ignition switch to the "ON" position.
(2) Check if the DTC is set.
(3) Turn the ignition switch to the "LOCK" (OFF) position.

Q: Are any "Stored" or "Active" DTCs set?

YES : Replace the SRS-ECU (Refer to P.52B-440).
NO : There is an intermittent malfunction such as poor engaged connector(s) or open circuit (Refer to GROUP 00, How to Cope with Intermittent Malfunction P.00-15).

DTC B223D: OCM (occupant classification-ECU) DTC Present

⚠ CAUTION
If DTC B223D is set in the SRS-ECU, always diagnose the CAN main bus line.

DTC SET CONDITION

It is set if a DTC occurs in the occupant classification-ECU.

TROUBLESHOOTING HINTS

- Malfunction of the SRS-ECU
- Malfunction of the occupant classification-ECU

DIAGNOSIS

Required Special Tool:

- MB991958: Scan Tool (M.U.T.-III Sub Assembly)
  - MB991824: Vehicle Communication Interface (V.C.I.)
  - MB991827: M.U.T.-III USB Cable
  - MB991910: M.U.T.-III Main Harness A (Vehicles with CAN communication system)

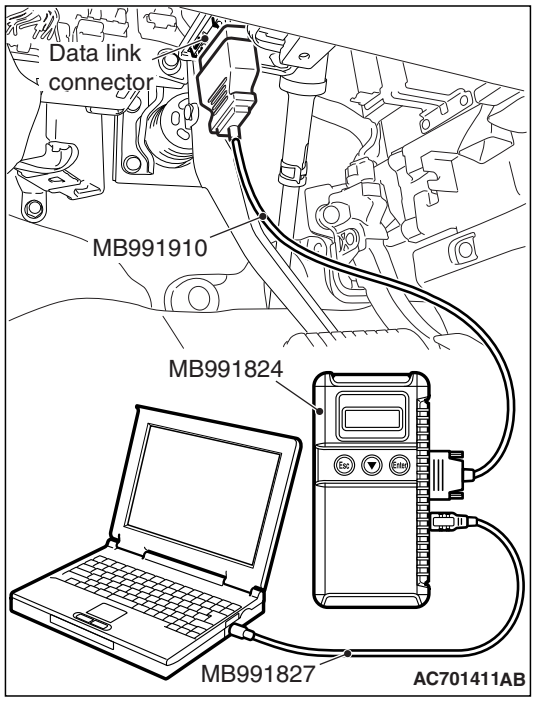

STEP 1. Using scan tool MB991958, diagnose the CAN bus line.

⚠ CAUTION

To prevent damage to scan tool MB991958, always turn the ignition switch to the "LOCK" (OFF) position before connecting or disconnecting scan tool MB991958.

(1) Connect scan tool MB991958. Refer to "How to connect the scan tool P.52B-28."
(2) Turn the ignition switch to the "ON" position.
(3) Diagnose the CAN bus line.
(4) Turn the ignition switch to the "LOCK" (OFF) position.

Q: Is the CAN bus line found to be normal?

YES : Go to Step 2.
NO : Repair the CAN bus line. (Refer to GROUP 54C, Diagnosis P.54C-17).

STEP 2. Recheck for diagnostic trouble code.

Check that the DTC is set in the occupant classification-ECU.

Q: Is the DTC set?

YES : Diagnose the occupant classification-ECU (Refer to P.52B-346).
NO : Go to Step 3

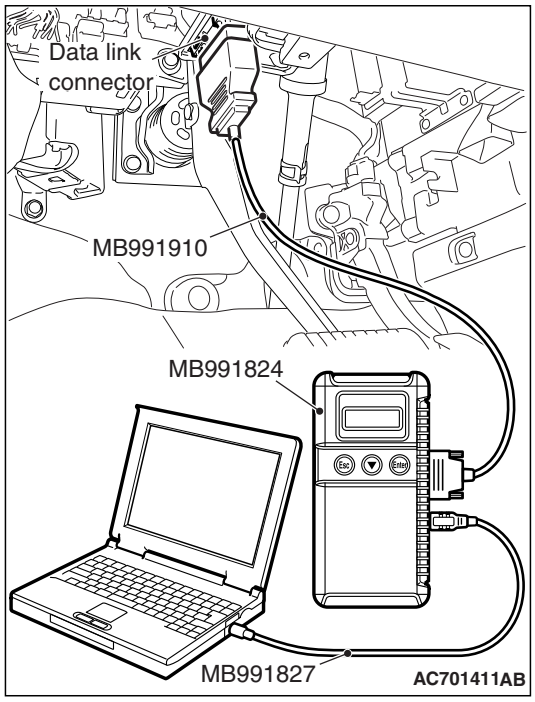

STEP 3. Recheck for diagnostic trouble code.

Check again if the DTC is set to the SRS-ECU.

(1) Erase the DTC.
(2) Turn the ignition switch from "LOCK" (OFF) position to "ON" position.
(3) Check if DTC is set.
(4) Turn the ignition switch to the "LOCK" (OFF) position.

Q: Is the DTC set?

YES : Replace the SRS-ECU (Refer to P.52B-440).

NO : There is an intermittent malfunction such as poor engaged connector(s) or open circuit (Refer to GROUP 00, How to use Troubleshooting/inspection Service Points P.00-15).

DTC B2255: Occupant Restraint Controller Roll-over Feature Disabled

⚠ CAUTION

If DTC B2255 is set in the SRS-ECU, always diagnose the CAN main bus line.

DTC SET CONDITION

The above DTC is set if an abnormality is detected in the circuit inside the SRS-ECU.

TROUBLESHOOTING HINTS

Malfunction of the SRS-ECU

DIAGNOSIS

Required Special Tools:

- MB991958: Scan Tool (M.U.T.-III Sub Assembly)
  - MB991824: Vehicle Communication Interface (V.C.I.)
  - MB991827: M.U.T.-III USB Cable
  - MB991910: M.U.T.-III Main Harness A (Vehicles with CAN communication system)

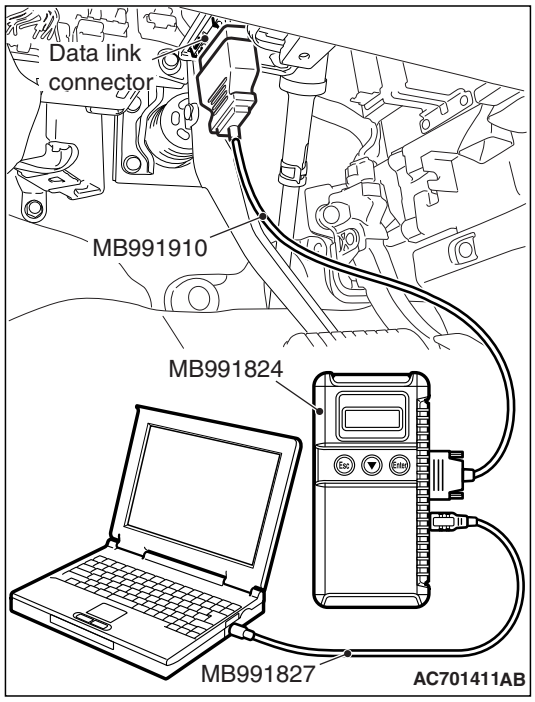

STEP 1. Using scan tool MB991958, diagnose the CAN bus line

⚠ CAUTION

To prevent damage to scan tool MB991958, always turn the ignition switch to the "LOCK" (OFF) position before connecting or disconnecting scan tool MB991958.

(1) Connect scan tool MB991958. Refer to "How to connect the scan tool P.52B-28."
(2) Turn the ignition switch to the "ON" position.
(3) Diagnose the CAN bus line.
(4) Turn the ignition switch to the "LOCK" (OFF) position.

Q: Is the CAN bus line found to be normal?

YES : Go to Step 2.
NO : Repair the CAN bus line. (Refer to GROUP 54C, Diagnosis P.54C-17).

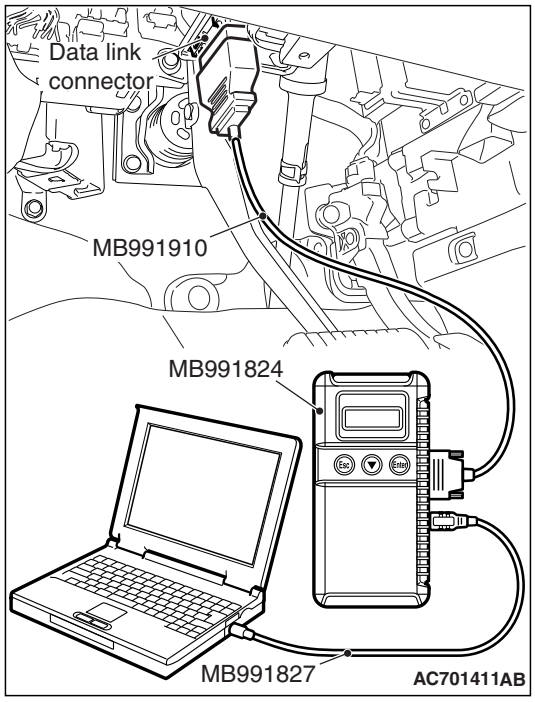

STEP 2. Recheck for diagnostic trouble code.

Check again if the DTC is set.
(1) Turn the ignition switch to the "ON" position.
(2) Check if the DTC is set.
(3) Turn the ignition switch to the "LOCK" (OFF) position.

Q: Is the DTC output regardless of "Active" or "Stored" faults?

YES : Replace the SRS-ECU (Refer to P.52B-440).
NO : There is an intermittent malfunction such as poor engaged connector(s) or open circuit (Refer to GROUP 00, How to Cope with Intermittent Malfunction P.00-15).

DTC U0019: Bus Off (CAN-B)

⚠ CAUTION

- **If the DTC U0019 is set, be sure to diagnose the CAN main bus line.**
- **When replacing the ECU, always check that the communication circuit is normal.**

DTC SET CONDITION

If the CAN-B circuit malfunction occurs, the SRS-ECU sets the DTC U0019.

JUDGMENT CRITERIA

Because of the CAN-B bus circuit malfunction, if SRS-ECU becomes unable to perform the normal data transmission, SRS-ECU determines that an abnormality is present.

TROUBLESHOOTING HINTS

The CAN bus line may be defective

DIAGNOSIS

Required Special Tools:

- MB991958: Scan Tool (M.U.T.-III Sub Assembly)
  - MB991824: Vehicles Communication Interface (V.C.I.)
  - MB991827: M.U.T.-III USB Cable
  - MB991910: M.U.T.-III Main Harness A (Vehicles with CAN communication system)

STEP 1. Using scan tool MB991958, diagnose the CAN bus line.

(1) Turn the ignition switch from "LOCK" (OFF) position to "ON" position.
(2) Diagnose the CAN bus line.
(3) Turn the ignition switch to the "LOCK" (OFF) position.

Q: Is the CAN bus line found to be normal?

YES : Go to Step 2.
NO : Repair the CAN bus line. (Refer to GROUP 54C, Diagnosis P.54C-17).

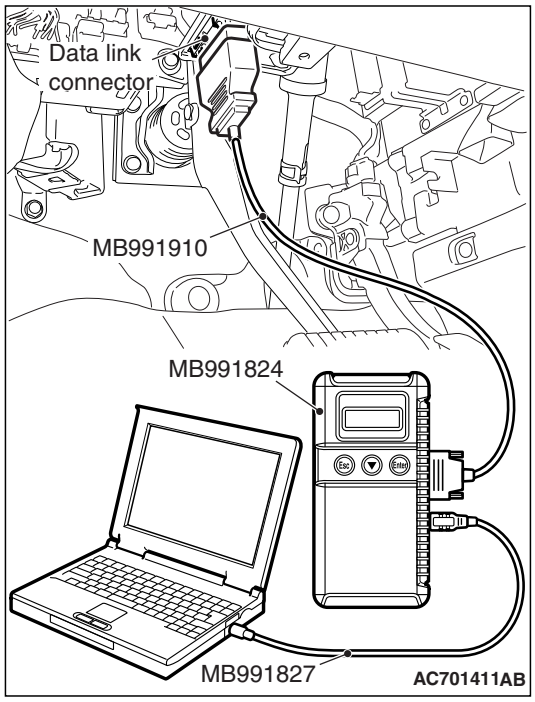

STEP 2. Recheck for diagnostic trouble code.
Check again if the DTC is set to the SRS-ECU.

⚠ CAUTION
To prevent damage to scan tool MB991958, always turn the ignition switch to the "LOCK" (OFF) position before connecting or disconnecting scan tool MB991958.

(1) Connect scan tool MB991958. Refer to "How to connect the scan tool P.52B-28."
(2) Turn the ignition switch to the "ON" position.
(3) Check if DTC is set.
(4) Turn the ignition switch to the "LOCK" (OFF) position.

Q: Is the DTC set?

YES : Replace the SRS-ECU (Refer to P.52B-440).
NO : The trouble can be an intermittent malfunction (Refer to GROUP 00 –How to use Troubleshooting/inspection Service Points –How to Cope with Intermittent Malfunction P.00-15).

DTC U0141: ETACS CAN Timeout

⚠ CAUTION
- **If the DTC U0141 is set, be sure to diagnose the CAN main bus line.**
- **When replacing the ECU, always check that the communication circuit is normal.**

DTC SET CONDITION
If the signal from ETACS-ECU cannot be received, the SRS-ECU sets the DTC U0141.

JUDGMENT CRITERIA
Because of the CAN-B bus circuit malfunction, if SRS-ECU becomes unable to perform the normal data transmission, SRS-ECU determines that an abnormality is present.

TROUBLESHOOTING HINTS
- The CAN bus line may be defective
- The ETACS-ECU may be defective
- The SRS-ECU may be defective

DIAGNOSIS

Required Special Tools:
- MB991958: Scan Tool (M.U.T.-III Sub Assembly)
  - MB991824: Vehicles Communication Interface (V.C.I.)
  - MB991827: M.U.T.-III USB Cable
  - MB991910: M.U.T.-III Main Harness A (Vehicles with CAN communication system)

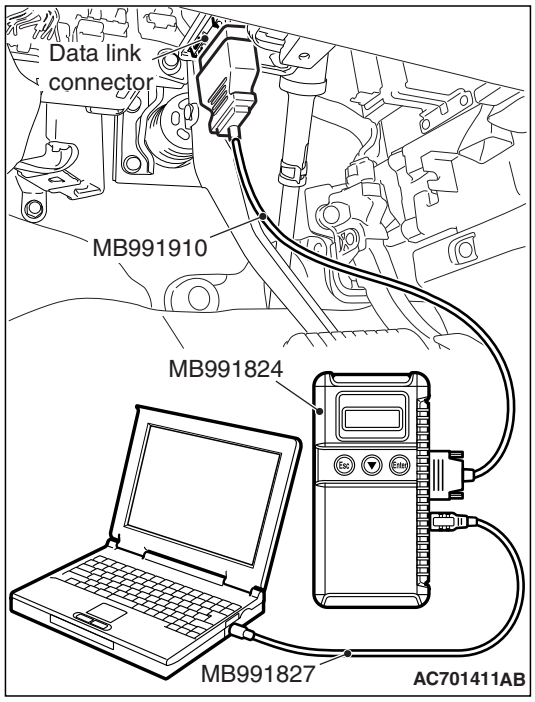

STEP 1. Using scan tool MB991958, diagnose the CAN bus line

⚠ CAUTION

To prevent damage to scan tool MB991958, always turn the ignition switch to the "LOCK" (OFF) position before connecting or disconnecting scan tool MB991958.

(1) Connect scan tool MB991958. Refer to "How to connect the scan tool P.52B-28."
(2) Turn the ignition switch to the "ON" position.
(3) Diagnose the CAN bus line.
(4) Turn the ignition switch to the "LOCK" (OFF) position.

Q: Is the CAN bus line found to be normal?

YES : Go to Step 2.
NO : Repair the CAN bus line (Refer to GROUP 54C, Diagnosis P.54C-17).

STEP 2. Using scan tool MB991958, read the ETACS-ECU diagnostic trouble code

Check again if the DTC is set to the ETACS-ECU.

Q: Is the DTC set?

YES : Diagnose the ETACS-ECU. Then go to Step 4.
NO : Go to Step 3.

STEP 3. Using scan tool MB991958, read diagnostic trouble code No. U0141 for other system.

Check if the DTC U0141 is set in occupant classification-ECU, combination meter, A/C-ECU, KOS-ECU or WCM, hands free module, CAN box unit, radio and CD player, satellite radio tuner.

Q: Is the DTC set?

YES : Replace the ETACS-ECU (Refer to GROUP 54A, ETACS –ETACS-ECU P.54A-841).
NO : Go to Step 4.

STEP 4 Recheck for diagnostic trouble code.

Check again if the DTC is set to the SRS-ECU.

(1) Erase the DTC.
(2) Turn the ignition switch from "LOCK" (OFF) position to "ON" position.
(3) Check if DTC is set.
(4) Turn the ignition switch to the "LOCK" (OFF) position.

Q: Is the DTC set?

YES : Replace the SRS-ECU.

NO : There is an intermittent malfunction such as poor engaged connector(s) or open circuit (Refer to GROUP 00, How to Cope with Intermittent Malfunction P.00-15).

DTC U0154: Occupant Classification-ECU CAN Timeout

⚠ CAUTION

- **If the DTC U0154 is set, be sure to diagnose the CAN main bus line.**
- **When replacing the ECU, always check that the communication circuit is normal.**

DTC SET CONDITION

When the signals from occupant classification-ECU cannot be received, the SRS-ECU sets the DTC U0154.

JUDGMENT CRITERIA

Because of the CAN-B bus circuit malfunction, if SRS-ECU becomes unable to perform the normal data transmission, SRS-ECU determines that an abnormality is present.

TROUBLESHOOTING HINTS

- The CAN bus line may be defective
- The occupant classification-ECU may be defective
- The SRS-ECU may be defective

DIAGNOSIS

Required Special Tools:

- MB991958: Scan Tool (M.U.T.-III Sub Assembly)
  - MB991824: Vehicles Communication Interface (V.C.I.)
  - MB991827: M.U.T.-III USB Cable
  - MB991910: M.U.T.-III Main Harness A (Vehicles with CAN communication system)

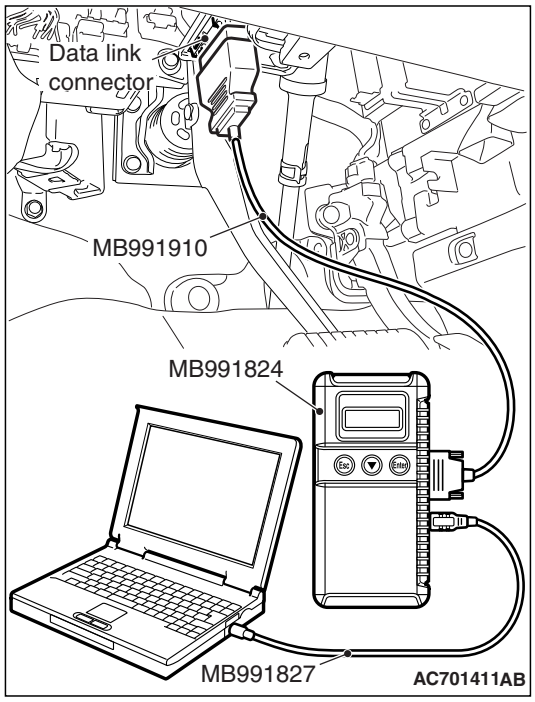

STEP 1. Using scan tool MB991958, diagnose the CAN bus line

⚠ CAUTION

To prevent damage to scan tool MB991958, always turn the ignition switch to the "LOCK" (OFF) position before connecting or disconnecting scan tool MB991958.

(1) Connect scan tool MB991958. Refer to "How to connect the scan tool P.52B-28."
(2) Turn the ignition switch to the "ON" position.
(3) Diagnose the CAN bus line.
(4) Turn the ignition switch to the "LOCK" (OFF) position.

Q: Is the CAN bus line found to be normal?

YES : Go to Step 2.
NO : Repair the CAN bus line. (Refer to GROUP 54C, Diagnosis P.54C-17).

STEP 2. Using scan tool MB991958, read the occupant classification-ECU diagnostic trouble code.

Check if the DTC is set to the occupant classification-ECU.

Q: Is the DTC B1BAA, B2207, B2208, B2209, B220A, B220B, B220C, B220D or B2255 set?

YES : Carry out troubleshooting of the occupant classification-ECU or the occupant classification sensor system (Refer to P.52B-346). Then go to Step 4.
NO : Go to Step 3.

STEP 3. Using scan tool MB991958, read diagnostic trouble code No. U0154 for other system.

Check if the DTC U0154 is set in ETACS-ECU, combination meter, A/C-ECU, KOS-ECU or WCM, hands free module, radio and CD player, satellite radio tuner.

Q: Is the DTC set?

YES : Replace the passenger seat cushion frame assembly (Refer to GROUP 52A, Front Seat Assembly P.52A-17).
NO : Go to Step 4.

STEP 4. Recheck for diagnostic trouble code.

Check again if the DTC is set to the SRS-ECU.

(1) Erase the DTC.
(2) Turn the ignition switch from "LOCK" (OFF) position to "ON" position.
(3) Check if DTC is set.
(4) Turn the ignition switch to the "LOCK" (OFF) position.

Q: Is the DTC set?

YES : Replace the SRS-ECU.

NO : There is an intermittent malfunction such as poor engaged connector(s) or open circuit (Refer to GROUP 00, How to use Troubleshooting/inspection Service Points P.00-15).

DTC U0155: Combination Meter CAN Timeout

⚠ CAUTION

- **If the DTC U0155 is set, be sure to diagnose the CAN main bus line.**
- **When replacing the ECU, always check that the communication circuit is normal.**

DTC SET CONDITION

If the signal from combination meter cannot be received, the SRS-ECU sets the DTC U0155.

JUDGMENT CRITERIA

Because of the CAN-B bus circuit malfunction, if SRS-ECU becomes unable to perform the normal data transmission, SRS-ECU determines that an abnormality is present.

TROUBLESHOOTING HINTS

- The CAN bus line may be defective
- The combination meter may be defective
- The SRS-ECU may be defective

DIAGNOSIS

Required Special Tools:

- MB991958: Scan Tool (M.U.T.-III Sub Assembly)
  - MB991824: Vehicles Communication Interface (V.C.I.)
  - MB991827: M.U.T.-III USB Cable
  - MB991910: M.U.T.-III Main Harness A (Vehicles with CAN communication system)

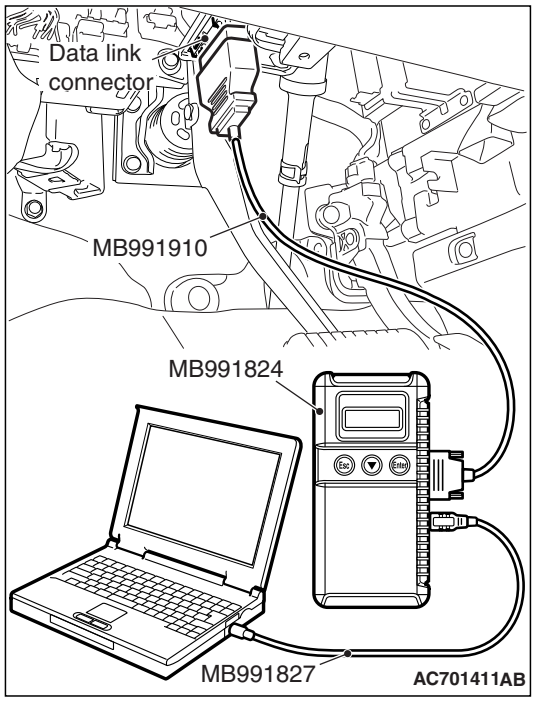

STEP 1. Using scan tool MB991958, diagnose the CAN bus line.

⚠ CAUTION

To prevent damage to scan tool MB991958, always turn the ignition switch to the "LOCK" (OFF) position before connecting or disconnecting scan tool MB991958.

(1) Connect scan tool MB991958. Refer to "How to connect the scan tool P.52B-28."
(2) Turn the ignition switch to the "ON" position.
(3) Diagnose the CAN bus line.
(4) Turn the ignition switch to the "LOCK" (OFF) position.

Q: Is the CAN bus line found to be normal?

YES : Go to Step 2.
NO : Repair the CAN bus line. (Refer to GROUP 54C, Diagnosis P.54C-17).

STEP 2. Using scan tool MB991958, read the combination meter diagnostic trouble code

Check if DTC is set to the combination meter.

Q: Is the DTC set?

YES : Diagnose the combination meter (Refer to GROUP 54A, Diagnosis P.54A-32). Then go to Step 4.
NO : Go to Step 3.

STEP 3. Using scan tool MB991958, read diagnostic trouble code No. U0155 for other system.

Check if the DTC U0155 is set in ETACS-ECU, occupant classification-ECU, A/C-ECU, KOS-ECU or WCM, hands free module, CAN box unit, radio and CD player, satellite radio tuner.

Q: Is the DTC set?

YES : Replace the combination meter (Refer to GROUP 54A, Combination Meter P.54A-123).
NO : Go to Step 4.

STEP 4. Recheck for diagnostic trouble code.

Check again if the DTC is set to the SRS-ECU.

(1) Erase the DTC.
(2) Turn the ignition switch from "LOCK" (OFF) position to "ON" position.
(3) Check if DTC is set.
(4) Turn the ignition switch to the "LOCK" (OFF) position.

Q: Is the DTC set?

YES : Replace the SRS-ECU.

NO : There is an intermittent malfunction such as poor engaged connector(s) or open circuit (Refer to GROUP 00, How to use Troubleshooting/inspection Service Points P.00-15).

DTC U0164: A/C-ECU CAN Timeout

⚠ CAUTION

- **If the DTC U0164 is set, be sure to diagnose the CAN main bus line.**
- **When replacing the ECU, always check that the communication circuit is normal.**

DTC SET CONDITION

If the signal from A/C-ECU cannot be received, the SRS-ECU sets the DTC U0164.

JUDGMENT CRITERIA

Because of the CAN-B bus circuit malfunction, if SRS-ECU becomes unable to perform the normal data transmission, SRS-ECU determines that an abnormality is present.

TROUBLESHOOTING HINTS

- The CAN bus line may be defective
- The A/C-ECU may be defective
- The SRS-ECU may be defective

DIAGNOSIS

Required Special Tools:

- MB991958: Scan Tool (M.U.T.-III Sub Assembly)
  - MB991824: Vehicles Communication Interface (V.C.I.)
  - MB991827: M.U.T.-III USB Cable
  - MB991910: M.U.T.-III Main Harness A (Vehicles with CAN communication system)

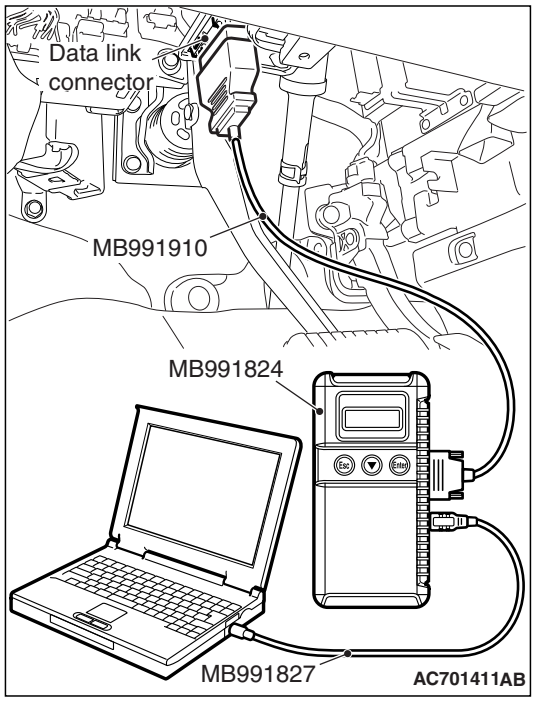

STEP 1. Using scan tool MB991958, diagnose the CAN bus line

⚠ CAUTION

To prevent damage to scan tool MB991958, always turn the ignition switch to the "LOCK" (OFF) position before connecting or disconnecting scan tool MB991958.

(1) Connect scan tool MB991958. Refer to "How to connect the Scan Tool (M.U.T.-III) P.52B-28."
(2) Turn the ignition switch to the "ON" position.
(3) Diagnose the CAN bus line.
(4) Turn the ignition switch to the "LOCK" (OFF) position.

Q: Is the CAN bus line found to be normal?

YES : Go to Step 2.
NO : Repair the CAN bus line. (Refer to GROUP 54C, Diagnosis P.54C-17).

STEP 2. Using scan tool MB991958, read the A/C diagnostic trouble code

Check if DTC is set to the A/C-ECU.

Q: Is the DTC set?

YES : Diagnose the A/C (Refer to GROUP 55B, Auto A/C Diagnosis P.55B-8). Then go to Step 4.
NO : Go to Step 3.

STEP 3. Using scan tool MB991958, read diagnostic trouble code No. U0164 for other system.

Check if the DTC U0164 is set in ETACS-ECU, occupant classification-ECU, combination meter, KOS-ECU or WCM, hands free module, CAN box unit, radio and CD player, satellite radio tuner.

Q: Is the DTC set?

YES : Replace the A/C-ECU (Refer to GROUP 55A, A/C-ECU P.55A-125).
NO : Go to Step 4.

STEP 4. Recheck for diagnostic trouble code.

Check again if the DTC is set to the SRS-ECU.

(1) Erase the DTC.
(2) Turn the ignition switch from "LOCK" (OFF) position to "ON" position.
(3) Check if DTC is set.
(4) Turn the ignition switch to the "LOCK" (OFF) position.

Q: Is the DTC set?

YES : Replace the SRS-ECU.

NO : There is an intermittent malfunction such as poor engaged connector(s) or open circuit (Refer to GROUP 00, How to use Troubleshooting/inspection Service Points P.00-15).

DTC U0168: KOS-ECU or WCM CAN Timeout

⚠ CAUTION

- **If DTC U0168 is set, be sure to diagnose the CAN bus line.**
- **When replacing the ECU, always check that the communication circuit is normal.**

DTC SET CONDITION

If the signal from KOS-ECU or WCM cannot be received, the SRS-ECU sets the DTC U0168.

JUDGMENT CRITERIA

Because of the CAN-B bus circuit malfunction, if SRS-ECU becomes unable to perform the normal data transmission, SRS-ECU determines that an abnormality is present.

TROUBLESHOOTING HINTS

- Malfunction of CAN bus line may be defective.
- Malfunction of the KOS-ECU may be defective.
- Malfunction of the WCM may be defective.
- Malfunction of SRS-ECU may be defective.

DIAGNOSIS

Required Special Tools:

- MB991958: Scan Tool (M.U.T.-III Sub Assembly)
  - MB991824: Vehicles Communication Interface (V.C.I.)
  - MB991827: M.U.T.-III USB Cable
  - MB991910: M.U.T.-III Main Harness A (Vehicles with CAN communication system)

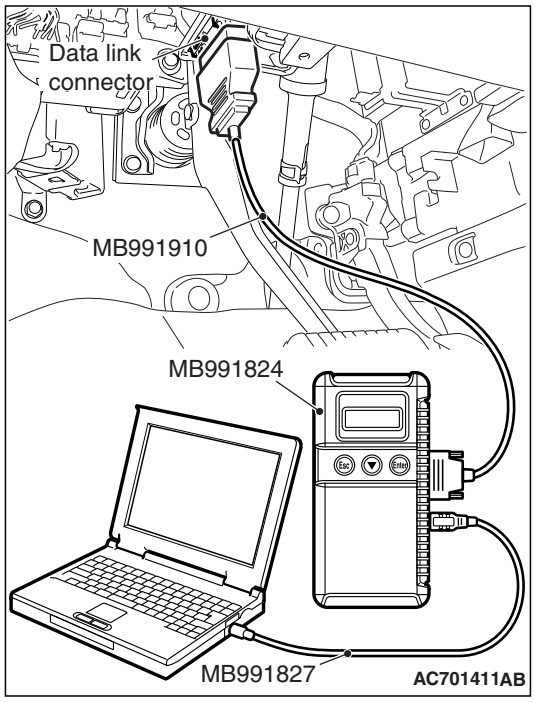

STEP 1. Using scan tool MB991958, diagnose the CAN bus line

⚠ CAUTION

To prevent damage to scan tool MB991958, always turn the ignition switch to the "LOCK" (OFF) position before connecting or disconnecting scan tool MB991958.

(1) Connect scan tool MB991958. Refer to "How to connect the Scan Tool (M.U.T.-III) P.52B-28."
(2) Turn the ignition switch to the "ON" position.
(3) Diagnose the CAN bus line.
(4) Turn the ignition switch to the "LOCK" (OFF) position.

Q: Is the CAN bus line found to be normal?

YES : Go to Step 2.
NO : Repair the CAN bus line. (Refer to GROUP 54C, Diagnosis P.54C-17).

STEP 2. Using scan tool MB991958, read the KOS-ECU or WCM diagnostic trouble code

Check again if the DTC is set to the KOS-ECU or WCM.

Q: Is the DTC set?

YES : Diagnose the KOS or WCM (Refer to GROUP 42B, DiagnosisP.42B-31 <KOS> or 42C, Diagnosis P.42C-18 <WCM>). Then go to Step 4.
NO : Go to Step 3.

STEP 3. Using scan tool MB991958, read diagnostic trouble code No. U0168 for other system.

Check if the DTC U0168 is set in ETACS-ECU, occupant classification-ECU, combination meter, A/C-ECU, hands free module, CAN box unit, radio and CD player, satellite radio tuner.

Q: Is the DTC set?

YES : Replace the KOS -ECU (Refer to GROUP 42B, KOS-ECU P.42B-208) or WCM (Refer to GROUP 42C, WCM P.42C-116)
NO : Go to Step 4.

STEP 4. Recheck for diagnostic trouble code.

Check again if the DTC is set to the SRS-ECU.

(1) Erase the DTC.
(2) Turn the ignition switch from "LOCK" (OFF) position to "ON" position.
(3) Check if DTC is set.
(4) Turn the ignition switch to the "LOCK" (OFF) position.

Q: Is the DTC set?

YES : Replace the SRS-ECU.

NO : There is an intermittent malfunction such as poor engaged connector(s) or open circuit (Refer to GROUP 00, How to use Troubleshooting/inspection Service Points P.00-15).

DTC U0170: Front Impact Sensor (LH) Communication Error

Front Impact Sensor Circuit

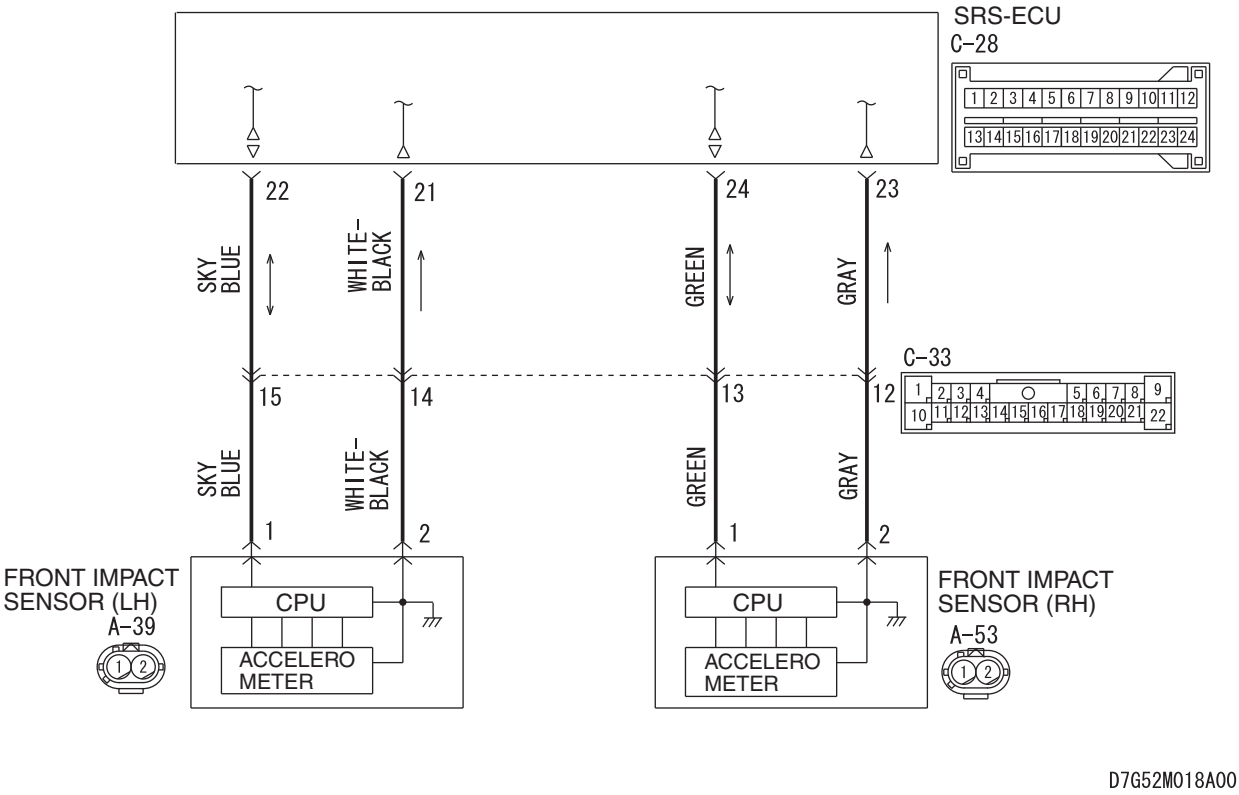

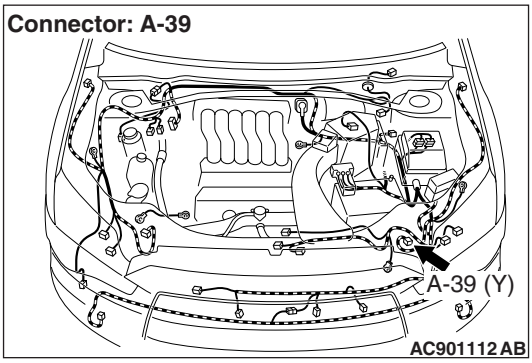

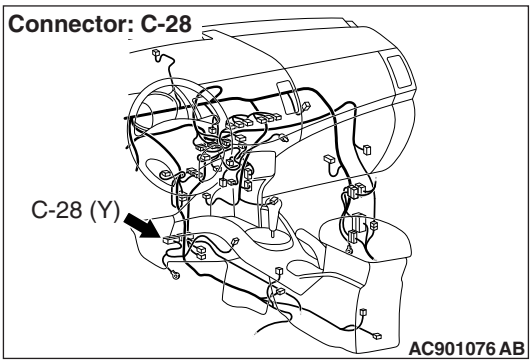

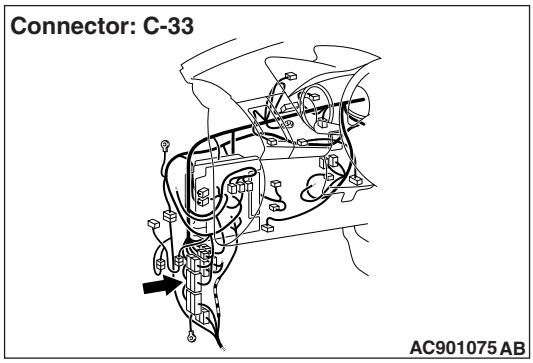

⚠ CAUTION

If DTC U0170 is set in the SRS-ECU, always diagnose the CAN main bus line.

CIRCUIT OPERATION

If an impact of set value or more is detected, the front impact sensor sends the coded acceleration data to SRS-ECU. Based on the acceleration data, SRS-ECU determines the necessity of driver's and front passenger's air bag deployment, and then turns ON the power supply circuit to the inflator.

DTC SET CONDITIONS

These DTCs are set if communication between the front impact sensor (LH) and the SRS-ECU is not possible or faulty.

TROUBLESHOOTING HINTS

- Damaged wiring harnesses or connectors
- Malfunction of the front impact sensor (LH)
- Malfunction of the SRS-ECU

DIAGNOSIS

Required Special Tools:

- MB991958: Scan Tool (M.U.T.-III Sub Assembly)
  - MB991824: Vehicle Communication Interface (V.C.I.)
  - MB991827: M.U.T.-III USB Cable
  - MB991910: M.U.T.-III Main Harness A (Vehicles with CAN communication system)

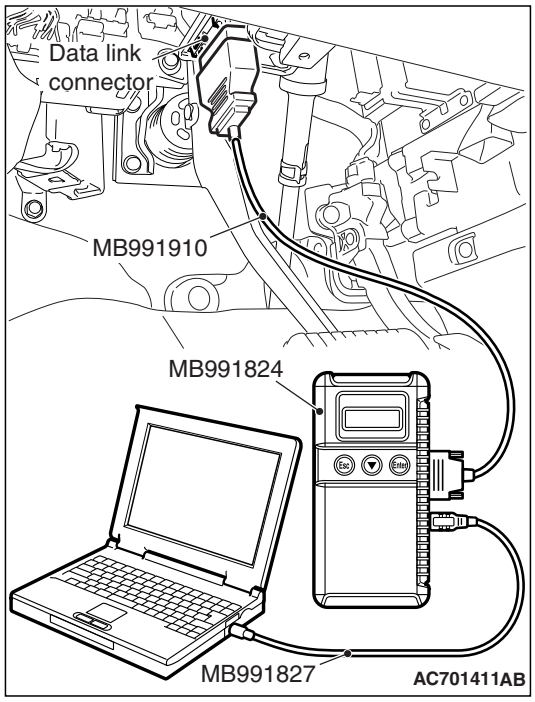

STEP 1. Using scan tool MB991958, diagnose the CAN bus line.

⚠ CAUTION

To prevent damage to scan tool MB991958, always turn the ignition switch to the "LOCK" (OFF) position before connecting or disconnecting scan tool MB991958.

(1) Connect scan tool MB991958. Refer to "How to connect the scan tool P.52B-28."
(2) Turn the ignition switch to the "ON" position.
(3) Diagnose the CAN bus line.
(4) Turn the ignition switch to the "LOCK" (OFF) position.

Q: Is the CAN bus line found to be normal?

YES : Go to Step 2.
NO : Repair the CAN bus line (Refer to GROUP 54C, Diagnosis P.54C-17).

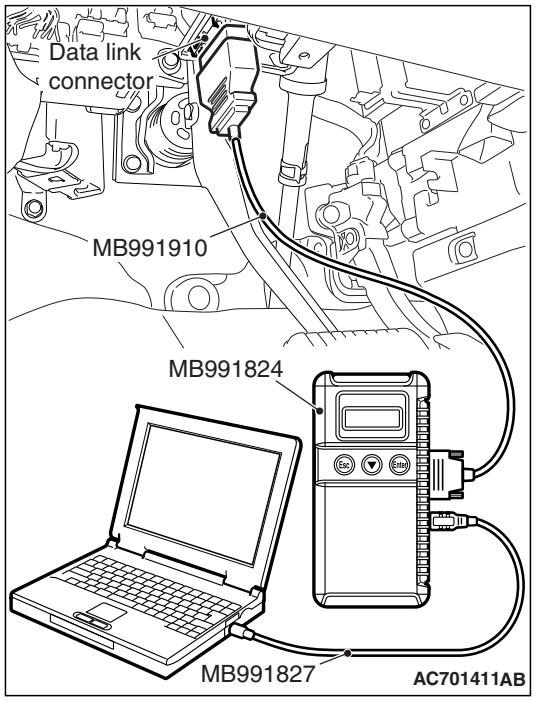

STEP 2. Recheck for diagnostic trouble code.

Check again if the DTC is set.
(1) Erase the DTC.
(2) Turn the ignition switch to the "ON" position.
(3) Check if the DTC is set.
(4) Turn the ignition switch to the "LOCK" (OFF) position.

Q: Is the DTC set?

YES : Go to Step 3.
NO : There is an intermittent malfunction such as poor engaged connector(s) or open circuit (Refer to GROUP 00, How to Cope with Intermittent Malfunction P.00-15).

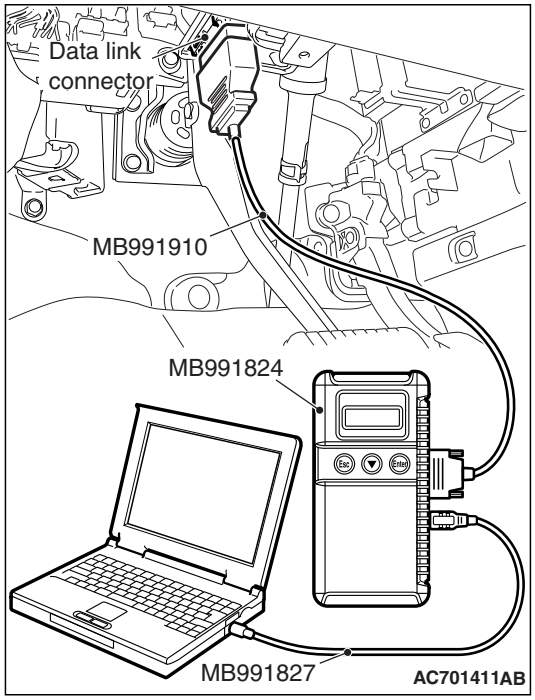

STEP 3. Check for any diagnostic trouble code. (Using scan tool MB991958, read the diagnostic trouble code.)

Check the front impact sensor (LH).

(1) Disconnect the negative battery terminal.
(2) Alternate the front impact sensor (LH) and front impact sensor (RH), and then install the alternated sensors.
(3) Connect the negative battery terminal.
(4) Erase diagnostic trouble code from memory, and check the diagnostic trouble code.

Q: Is DTC U0171 set?

YES : Replace the front impact sensor (LH) with a new one. (Refer to P.52B-437). Go to Step 5.

NO : Go to Step 4.

STEP 4. Check the harness wires for open circuit and short circuit between SRS-ECU connector C-28 (terminal No.21 and 22) and front impact sensor (LH) connector A-39 (terminal No.2 and 1).

NOTE: After inspecting intermediate connector C-33 inspect the wiring harness. If the intermediate connector C-33 is damaged, repair or replace it.

Q: Are the harness wires between SRS-ECU connector C-28 (terminal No.21 and 22) and front impact sensor (LH) connector A-39 (terminal No.2 and 1) in good condition?

YES : Go to Step 5.

NO : Repair the harness wires between SRS-ECU connector C-28 and front impact sensor (LH) connector A-39.

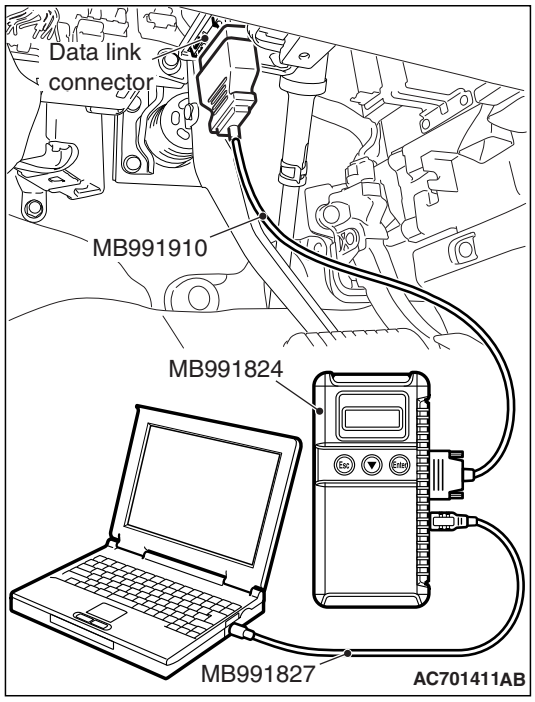

STEP 5. Recheck for diagnostic trouble code.

Check again if the DTC is set.

(1) Erase the DTC.
(2) Turn the ignition switch to the "ON" position.
(3) Check if the DTC is set.
(4) Turn the ignition switch to the "LOCK" (OFF) position.

Q: Is DTC U0170 set?

YES : Replace SRS-ECU (Refer to P.52B-440).

NO : There is an intermittent malfunction such as poor engaged connector(s) or open circuit (Refer to GROUP 00, How to Cope with Intermittent Malfunction P.00-15).

DTC U0171: Front Impact Sensor (RH) Communication Error

Front Impact Sensor Circuit

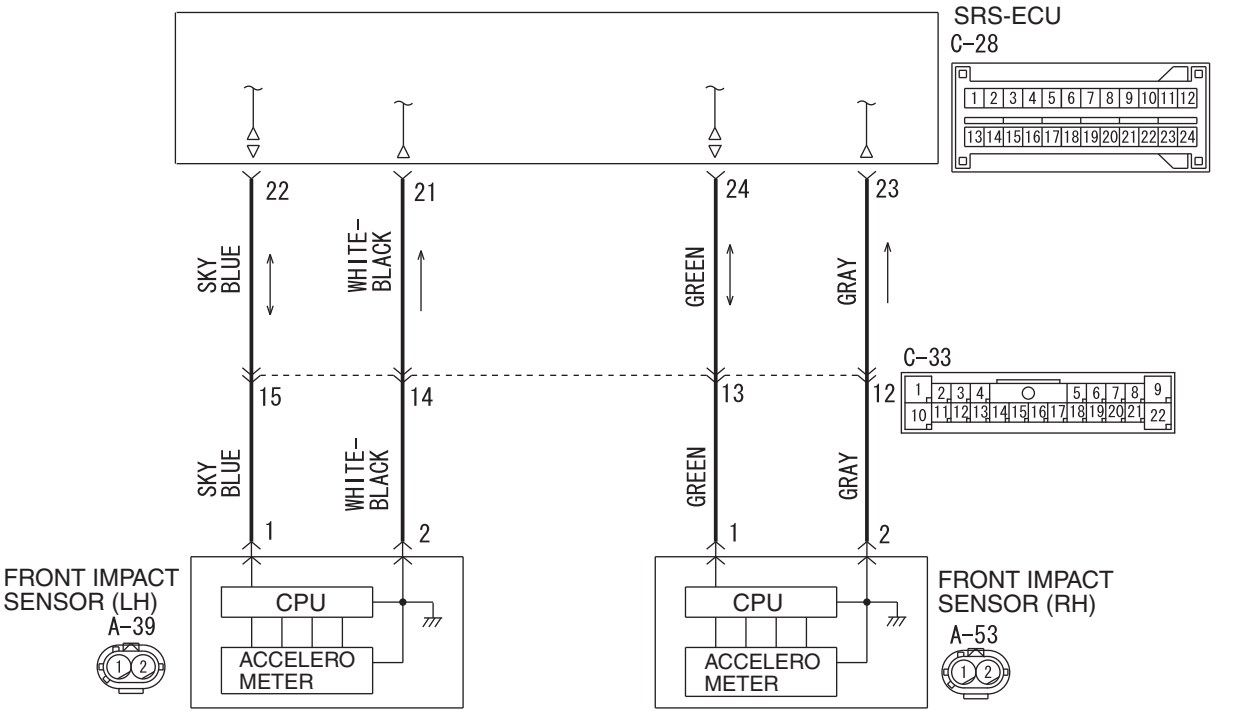

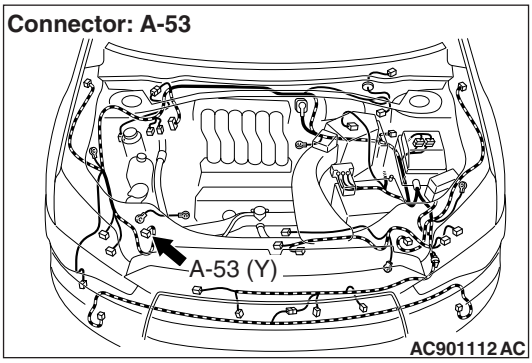

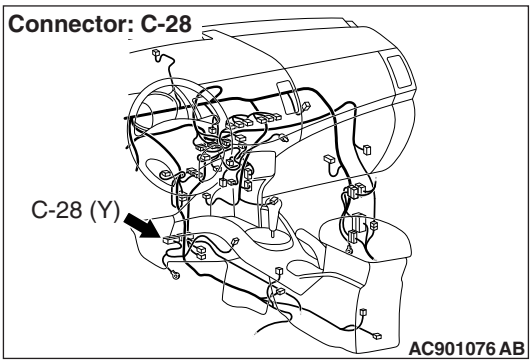

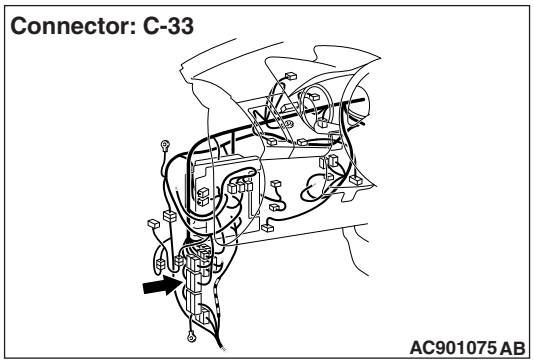

⚠ CAUTION

If DTC U0171 is set in the SRS-ECU, always diagnose the CAN main bus line.

CIRCUIT OPERATION

If an impact of set value or more is detected, the front impact sensor sends the coded acceleration data to SRS-ECU. Based on the acceleration data, SRS-ECU determines the necessity of driver's and front passenger's air bag deployment, and then turns ON the power supply circuit to the inflator.

DTC SET CONDITIONS

These DTCs are set if communication between the front impact sensor (RH) and the SRS-ECU is not possible or faulty.

TROUBLESHOOTING HINTS

- Damaged wiring harnesses or connectors
- Malfunction of the front impact sensor (RH)
- Malfunction of the SRS-ECU

DIAGNOSIS

Required Special Tools:

- MB991958: Scan Tool (M.U.T.-III Sub Assembly)
  - MB991824: Vehicle Communication Interface (V.C.I.)
  - MB991827: M.U.T.-III USB Cable
  - MB991910: M.U.T.-III Main Harness A (Vehicles with CAN communication system)

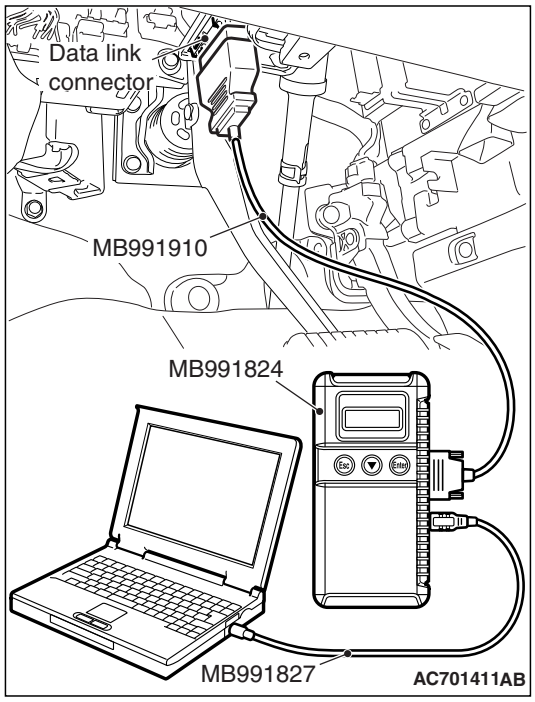

STEP 1. Using scan tool MB991958, diagnose the CAN bus line.

⚠ CAUTION

To prevent damage to scan tool MB991958, always turn the ignition switch to the "LOCK" (OFF) position before connecting or disconnecting scan tool MB991958.

(1) Connect scan tool MB991958. Refer to "How to connect the scan tool P.52B-28."
(2) Turn the ignition switch to the "ON" position.
(3) Diagnose the CAN bus line.
(4) Turn the ignition switch to the "LOCK" (OFF) position.

Q: Is the CAN bus line found to be normal?

YES : Go to Step 2.
NO : Repair the CAN bus line (Refer to GROUP 54C, Diagnosis P.54C-17).

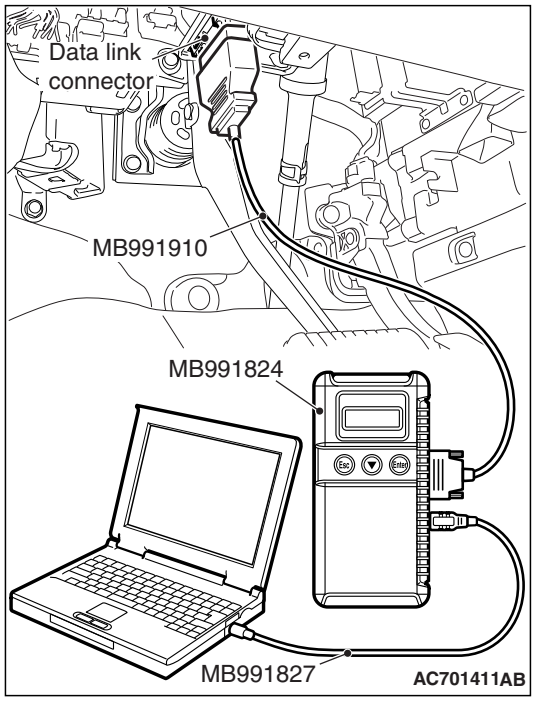

STEP 2. Recheck for diagnostic trouble code.

Check again if the DTC is set.
(1) Erase the DTC.
(2) Turn the ignition switch to the "ON" position.
(3) Check if the DTC is set.
(4) Turn the ignition switch to the "LOCK" (OFF) position.

Q: Is the DTC set?

YES : Go to Step 3.
NO : There is an intermittent malfunction such as poor engaged connector(s) or open circuit (Refer to GROUP 00, How to Cope with Intermittent Malfunction P.00-15).

STEP 3. Check for any diagnostic trouble code. (Using scan tool MB991958, read the diagnostic trouble code.)

Check the front impact sensor (RH).

(1) Disconnect the negative battery terminal.
(2) Alternate the front impact sensor (RH) and front impact sensor (LH), and then install the alternated sensors.
(3) Connect the negative battery terminal.
(4) Erase diagnostic trouble code from memory, and check the diagnostic trouble code.

Q: Is DTC U0170 set?

YES : Replace the front impact sensor (RH) with a new one. (Refer to P.52B-437). Go to Step 5.

NO : Go to Step 4.

STEP 4. Check the harness wires for open circuit and short circuit between SRS-ECU connector C-28 (terminal No.23 and 24) and front impact sensor (RH) connector A-53 (terminal No.2 and 1).

NOTE: After inspecting intermediate connector C-33 inspect the wiring harness. If the intermediate connector C-33 is damaged, repair or replace it.

Q: Are the harness wires between SRS-ECU connector C-28 (terminal No.23 and 24) and front impact sensor (RH) connector A-53 (terminal No.2 and 1) in good condition?

YES : Go to Step 5.

NO : Repair the harness wires between SRS-ECU connector C-28 and front impact sensor (RH) connector A-53.

STEP 5. Recheck for diagnostic trouble code.

Check again if the DTC is set.

(1) Erase the DTC.
(2) Turn the ignition switch to the "ON" position.
(3) Check if the DTC is set.
(4) Turn the ignition switch to the "LOCK" (OFF) position.

Q: Is DTC U0171 set?

YES : Replace the SRS-ECU (Refer to P.52B-440).

NO : There is an intermittent malfunction such as poor engaged connector(s) or open circuit (Refer to GROUP 00, How to Cope with Intermittent Malfunction P.00-15).

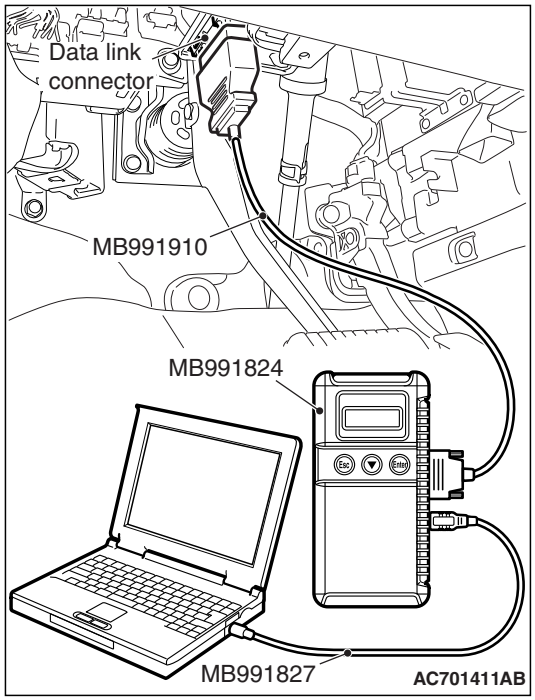

DTC U0172: Side Impact Sensor (Front) (LH) Communication Error

Side Impact Sensor (Front, Rear) (LH) Circuit

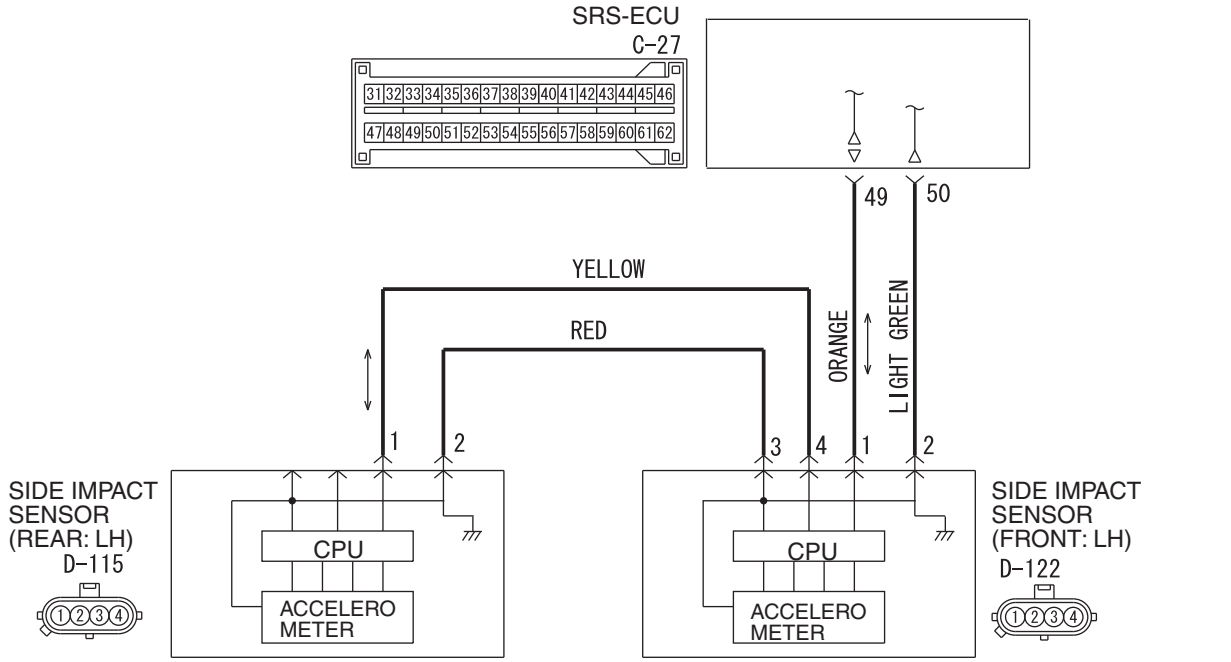

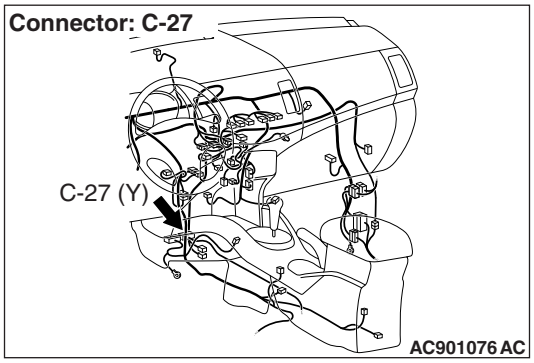

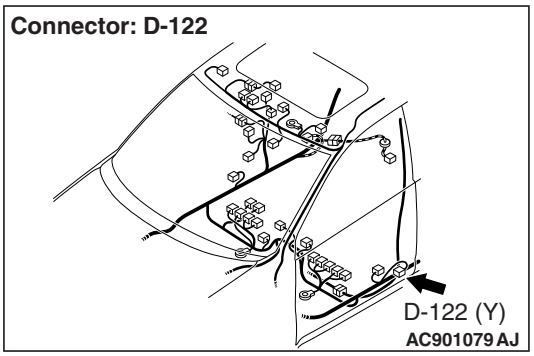

⚠ CAUTION

If DTC U0172 is set in the SRS-ECU, always diagnose the CAN main bus line.

CIRCUIT OPERATION

If an impact of set value or more is detected, the side impact sensor sends the coded acceleration data to SRS-ECU. Based on the acceleration data, SRS-ECU determines the necessity of side-air bag and curtain air bag deployment, and then turns ON the power supply circuit to the inflator.

DTC SET CONDITIONS

These DTCs are set if communication between the side impact sensor (front) (LH) and the SRS-ECU is not possible or faulty.

TROUBLESHOOTING HINTS

- Damaged wiring harnesses or connectors
- Malfunction of the side impact sensor (front) (LH)
- Malfunction of the SRS-ECU

DIAGNOSIS

Required Special Tools:

- MB991958: Scan Tool (M.U.T.-III Sub Assembly)
  - MB991824: Vehicle Communication Interface (V.C.I.)
  - MB991827: M.U.T.-III USB Cable
  - MB991910: M.U.T.-III Main Harness A (Vehicles with CAN communication system)

STEP 1. Using scan tool MB991958, diagnose the CAN bus line.

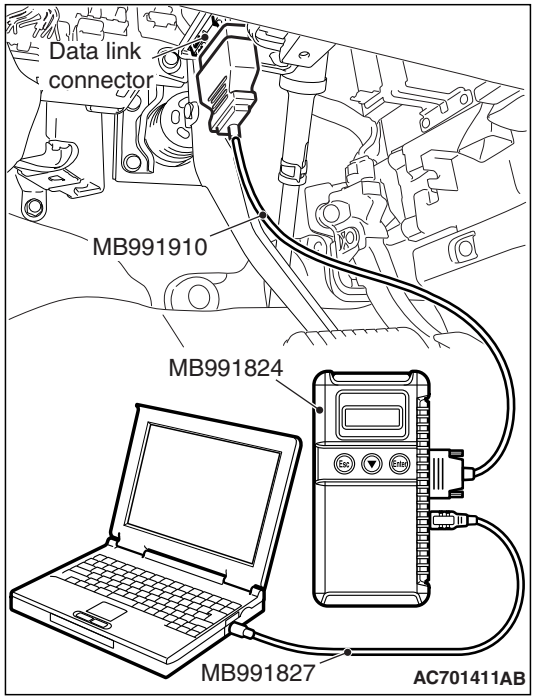

⚠ CAUTION

To prevent damage to scan tool MB991958, always turn the ignition switch to the "LOCK" (OFF) position before connecting or disconnecting scan tool MB991958.

(1) Connect scan tool MB991958. Refer to "How to connect the scan tool P.52B-28."
(2) Turn the ignition switch to the "ON" position.
(3) Diagnose the CAN bus line.
(4) Turn the ignition switch to the "LOCK" (OFF) position.

Q: Is the CAN bus line found to be normal?

YES : Go to Step 2.
NO : Repair the CAN bus line (Refer to GROUP 54C, Diagnosis P.54C-17).

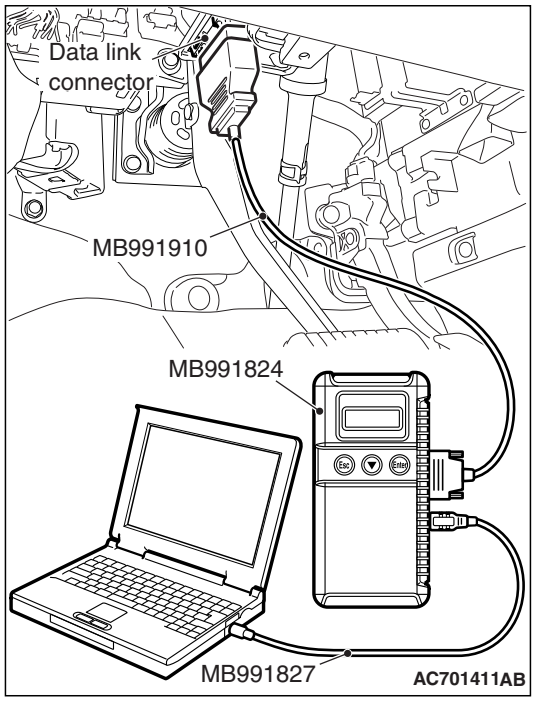

STEP 2. Recheck for diagnostic trouble code.

Check again if the DTC is set.

(1) Erase the DTC.
(2) Turn the ignition switch to the "ON" position.
(3) Check if the DTC is set.
(4) Turn the ignition switch to the "LOCK" (OFF) position.

Q: Is the DTC set?

YES : Go to Step 3.

NO : There is an intermittent malfunction such as poor engaged connector(s) or open circuit (Refer to GROUP 00, How to Cope with Intermittent Malfunction P.00-15).

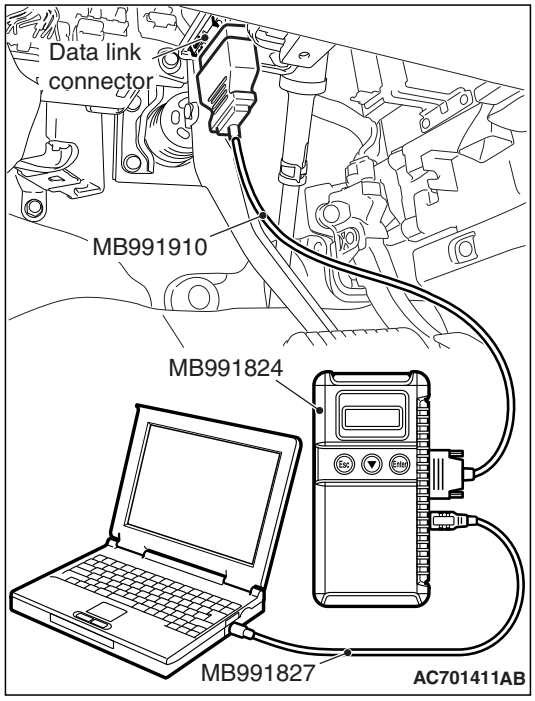

STEP 3. Check for any diagnostic trouble code. (Using scan tool MB991958, read the diagnostic trouble code.)

Check the side impact sensor (front) (LH).

(1) Disconnect the negative battery terminal.
(2) Alternate the side impact sensor (front) (LH) and side impact sensor (front) (RH), and then install the alternated sensors.
(3) Connect the negative battery terminal.
(4) Erase diagnostic trouble code from memory, and check the diagnostic trouble code.

Q: Is DTC U0175 set?

YES : Replace the side impact sensor (front) (LH) with a new one. (Refer to P.52B-454). Go to Step 5.

NO : Go to Step 4.

STEP 4. Check the harness wires for open circuit and short circuit between SRS-ECU connector C-27 (terminal No.49 and 50) and side impact sensor (front) (LH) connector D-122 (terminal No.1 and 2).

Q: Are the harness wires between SRS-ECU connector C-27 (terminal No.49 and 50) and side impact sensor (front) (LH) connector D-122 (terminal No.1 and 2) in good condition?

YES : Go to Step 5.

NO : Repair the harness wires between SRS-ECU connector C-27 and side impact sensor (front) (LH) connector D-122.

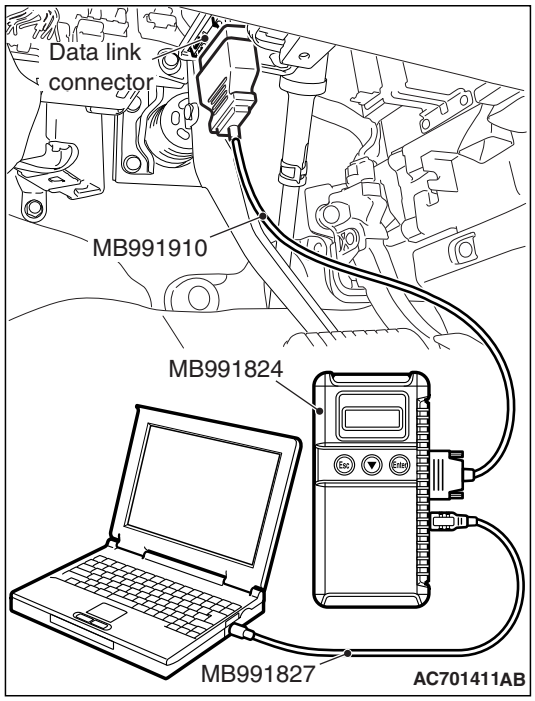

STEP 5. Recheck for diagnostic trouble code.

Check again if the DTC is set.

(1) Erase the DTC.
(2) Turn the ignition switch to the "ON" position.
(3) Check if the DTC is set.
(4) Turn the ignition switch to the "LOCK" (OFF) position.

Q: Is DTC U0172 set?

YES : Replace the SRS-ECU (Refer to P.52B-440).

NO : There is an intermittent malfunction such as poor engaged connector(s) or open circuit (Refer to GROUP 00, How to Cope with Intermittent Malfunction P.00-15).

DTC U0173: Side Impact Sensor (Rear) (LH) Communication Error

Side Impact Sensor (Front, Rear) (LH) Circuit

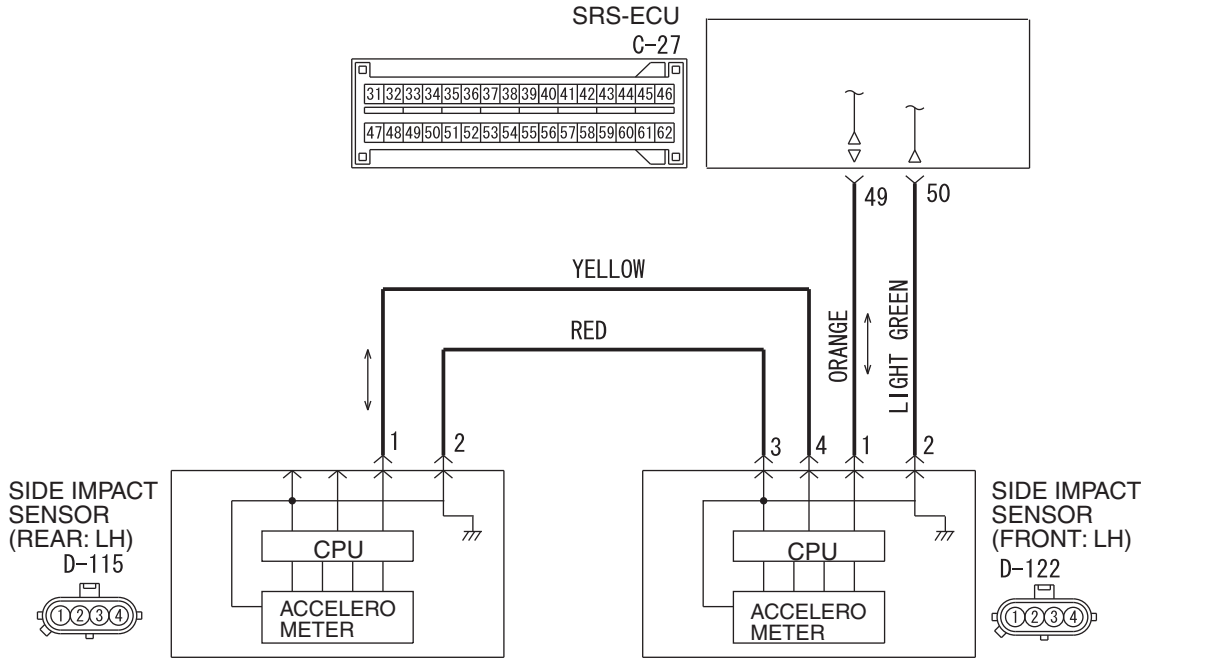

AC803463 AB

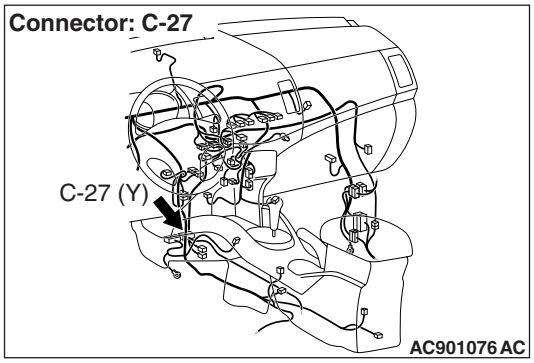

AC901076 AC

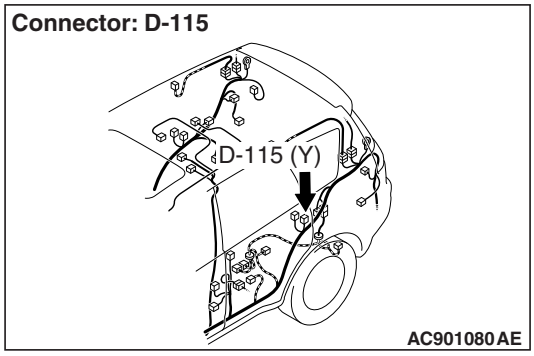

AC901080 AE

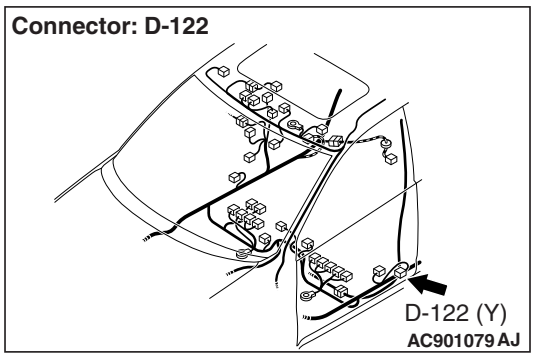

AC901079 AJ

⚠ CAUTION

If DTC U0173 is set in the SRS-ECU, always diagnose the CAN main bus line.

TSB Revision

CIRCUIT OPERATION

If an impact of set value or more is detected, the side impact sensor (rear) sends the coded acceleration data to SRS-ECU via side impact sensor (front). Based on the acceleration data, SRS-ECU determines the necessity of curtain air bag deployment, and then turns ON the power supply circuit to the inflator.

DTC SET CONDITIONS

These DTCs are set if communication between the side impact sensor (rear) (LH) and the SRS-ECU is not possible or faulty.

TROUBLESHOOTING HINTS

- Damaged wiring harnesses or connectors
- Malfunction of the side impact sensor (rear) (LH)
- Malfunction of the SRS-ECU

DIAGNOSIS

Required Special Tools:

- MB991958: Scan Tool (M.U.T.-III Sub Assembly)
  - MB991824: Vehicle Communication Interface (V.C.I.)
  - MB991827: M.U.T.-III USB Cable
  - MB991910: M.U.T.-III Main Harness A (Vehicles with CAN communication system)

STEP 1. Using scan tool MB991958, diagnose the CAN bus line.

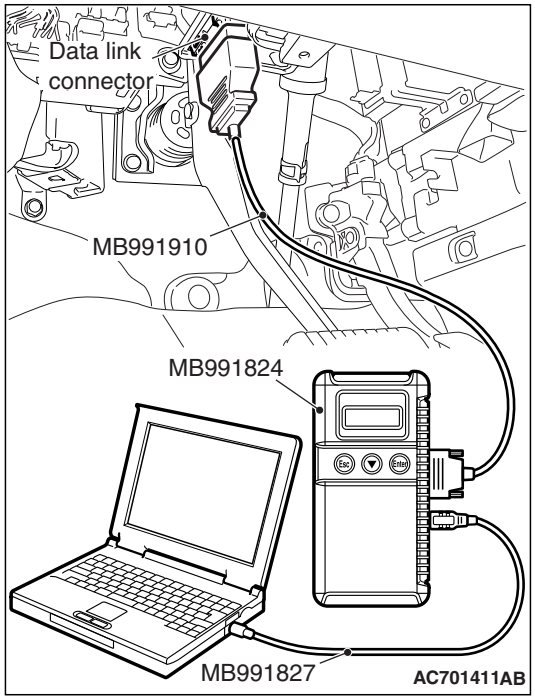

⚠ CAUTION

To prevent damage to scan tool MB991958, always turn the ignition switch to the "LOCK" (OFF) position before connecting or disconnecting scan tool MB991958.

(1) Connect scan tool MB991958. Refer to "How to connect the scan tool P.52B-28."
(2) Turn the ignition switch to the "ON" position.
(3) Diagnose the CAN bus line.
(4) Turn the ignition switch to the "LOCK" (OFF) position.

Q: Is the CAN bus line found to be normal?

YES : Go to Step 2.
NO : Repair the CAN bus line (Refer to GROUP 54C, Diagnosis P.54C-17).

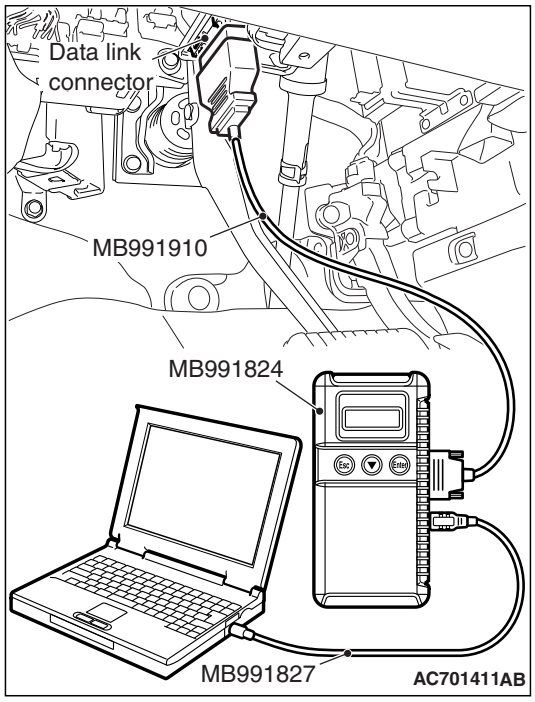

STEP 2. Recheck for diagnostic trouble code.

Check again if the DTC is set.

(1) Erase the DTC.
(2) Turn the ignition switch to the "ON" position.
(3) Check if the DTC is set.
(4) Turn the ignition switch to the "LOCK" (OFF) position.

Q: Is the DTC set?

YES : Go to Step 3.

NO : There is an intermittent malfunction such as poor engaged connector(s) or open circuit (Refer to GROUP 00, How to Cope with Intermittent Malfunction P.00-15).

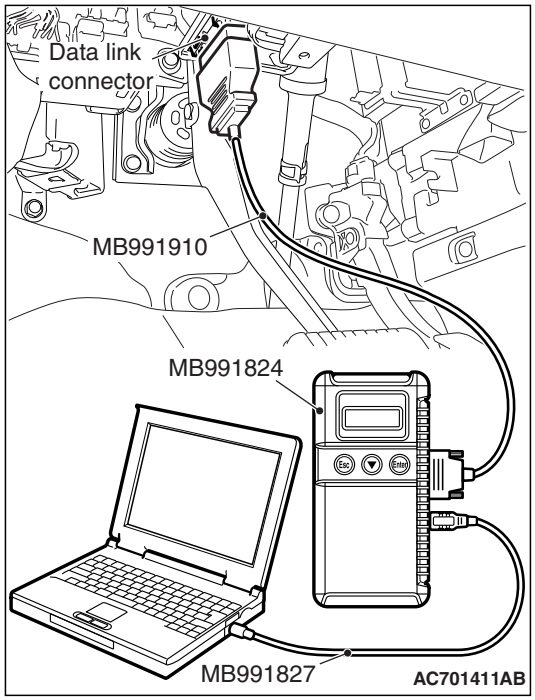

STEP 3. Check for any diagnostic trouble code. (Using scan tool MB991958, read the diagnostic trouble code.)

Check the side impact sensor (rear) (LH).

(1) Disconnect the negative battery terminal.
(2) Alternate the side impact sensor (rear) (LH) and side impact sensor (rear) (RH), and then install the alternated sensors.
(3) Connect the negative battery terminal.
(4) Erase diagnostic trouble code from memory, and check the diagnostic trouble code.

Q: Is DTC U0176 set?

YES : Replace the side impact sensor (rear) (LH) with a new one. (Refer to P.52B-454). Go to Step 5.

NO : Go to Step 4.

STEP 4. Check the harness wires for open circuit and short circuit between side impact sensor (rear) (LH) connector D-115 (terminal No.1 and 2) and side impact sensor (front) (LH) connector D-122 (terminal No.4 and 3).

Q: Are the harness wires between side impact sensor (rear) (LH) connector D-115 (terminal No.1 and 2) and side impact sensor (front) (LH) connector D-122 (terminal No.4 and 3) in good condition?

YES : Go to Step 5.

NO : Repair the harness wires between side impact sensor (rear) (LH) connector D-115 and side impact sensor (front) (LH) connector D-122.

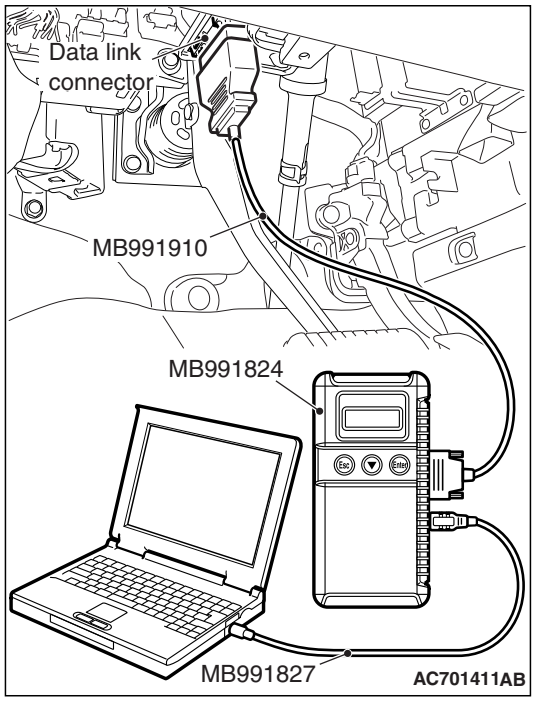

STEP 5. Recheck for diagnostic trouble code.

Check again if the DTC is set.

(1) Erase the DTC.
(2) Turn the ignition switch to the "ON" position.
(3) Check if the DTC is set.
(4) Turn the ignition switch to the "LOCK" (OFF) position.

Q: Is DTC U0173 set?

YES : Replace the SRS-ECU (Refer to P.52B-440).

NO : There is an intermittent malfunction such as poor engaged connector(s) or open circuit (Refer to GROUP 00, How to Cope with Intermittent Malfunction P.00-15).

DTC U0175: Side Impact Sensor (Front) (RH) Communication Error

Side Impact Sensor (Front, Rear) (RH) Circuit

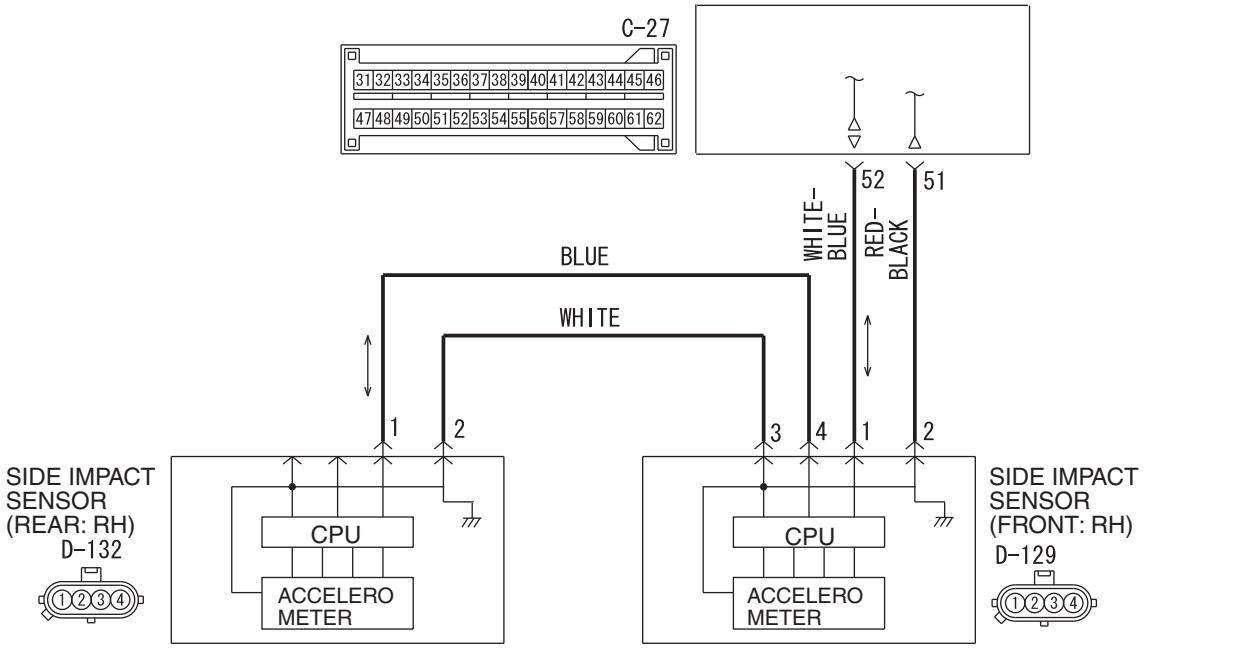

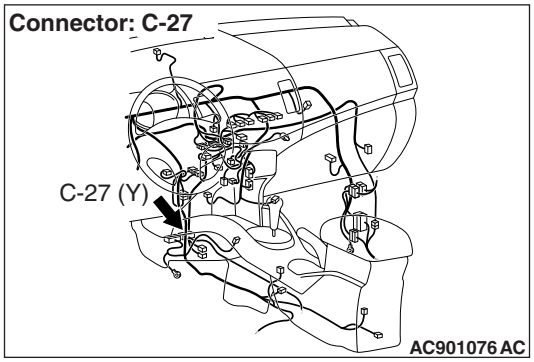

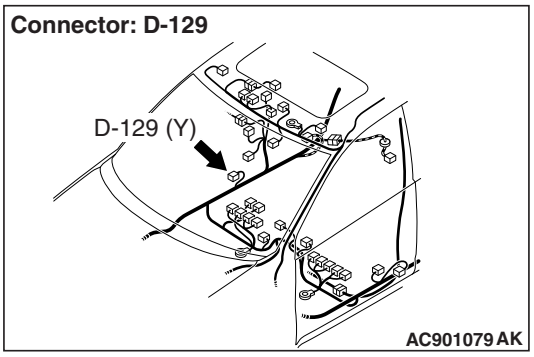

⚠ CAUTION

If DTC U0175 is set in the SRS-ECU, always diagnose the CAN main bus line.

CIRCUIT OPERATION

If an impact of set value or more is detected, the side impact sensor sends the coded acceleration data to SRS-ECU. Based on the acceleration data, SRS-ECU determines the necessity of side air bag and curtain air bag deployment, and then turns ON the power supply circuit to the inflator.

DTC SET CONDITIONS

These DTCs are set if communication between the side impact sensor (front) (RH) and the SRS-ECU is not possible or faulty.

TROUBLESHOOTING HINTS

- Damaged wiring harnesses or connectors
- Malfunction of the side impact sensor (front) (RH)
- Malfunction of the SRS-ECU

DIAGNOSIS

Required Special Tools:

- MB991958: Scan Tool (M.U.T.-III Sub Assembly)
  - MB991824: Vehicle Communication Interface (V.C.I.)
  - MB991827: M.U.T.-III USB Cable
  - MB991910: M.U.T.-III Main Harness A (Vehicles with CAN communication system)

STEP 1. Using scan tool MB991958, diagnose the CAN bus line.

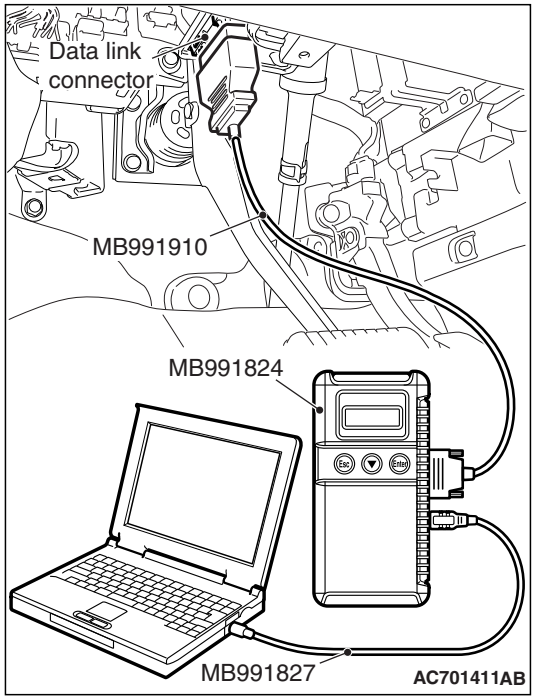

⚠ CAUTION

To prevent damage to scan tool MB991958, always turn the ignition switch to the "LOCK" (OFF) position before connecting or disconnecting scan tool MB991958.

(1) Connect scan tool MB991958. Refer to "How to connect the scan tool P.52B-28."
(2) Turn the ignition switch to the "ON" position.
(3) Diagnose the CAN bus line.
(4) Turn the ignition switch to the "LOCK" (OFF) position.

Q: Is the CAN bus line found to be normal?

YES : Go to Step 2.
NO : Repair the CAN bus line (Refer to GROUP 54C, Diagnosis P.54C-17).

STEP 2. Recheck for diagnostic trouble code.

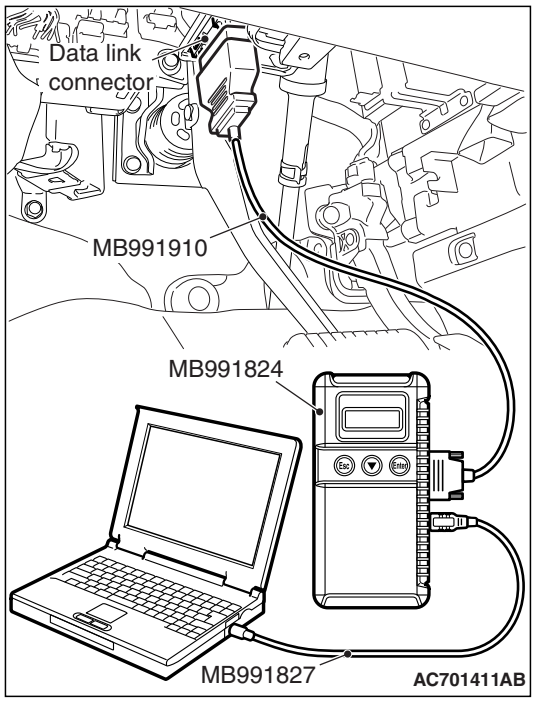

Check again if the DTC is set.
(1) Erase the DTC.
(2) Turn the ignition switch to the "ON" position.
(3) Check if the DTC is set.
(4) Turn the ignition switch to the "LOCK" (OFF) position.

Q: Is the DTC set?

YES : Go to Step 3.
NO : There is an intermittent malfunction such as poor engaged connector(s) or open circuit (Refer to GROUP 00, How to Cope with Intermittent Malfunction P.00-15).

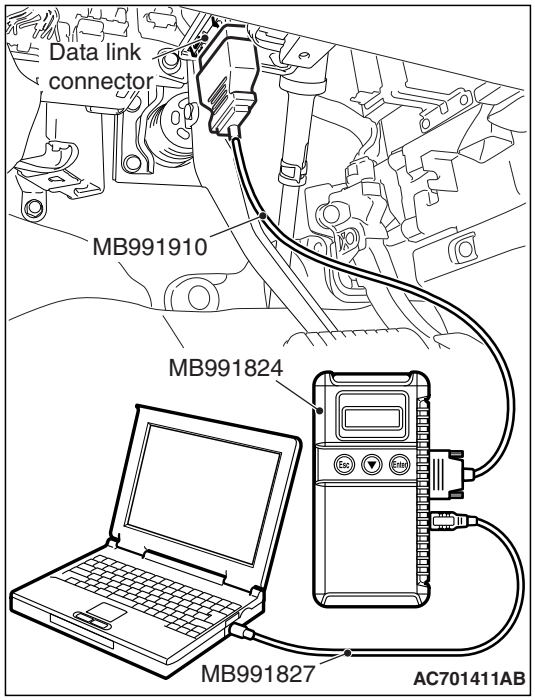

STEP 3. Check for any diagnostic trouble code. (Using scan tool MB991958, read the diagnostic trouble code.)

Check the side impact sensor (front) (RH).

(1) Disconnect the negative battery terminal.
(2) Alternate the side impact sensor (front) (RH) and side impact sensor (front) (LH), and then install the alternated sensors.
(3) Connect the negative battery terminal.
(4) Erase diagnostic trouble code from memory, and check the diagnostic trouble code.

Q: Is DTC U0172 set?

YES : Replace the side impact sensor (front) (RH) with a new one. (Refer to P.52B-454). Go to Step 5.

NO : Go to Step 4.

STEP 4. Check the harness wires for open circuit and short circuit between SRS-ECU connector C-27 (terminal No.51 and 52) and side impact sensor (front) (RH) connector D-129 (terminal No.2 and 1).

Q: Are the harness wires between SRS-ECU connector C-27 (terminal No.51 and 52) and side impact sensor (front) (RH) connector D-129 (terminal No.2 and 1) in good condition?

YES : Go to Step 5.

NO : Repair the harness wires between SRS-ECU connector C-27 and side impact sensor (front) (RH) connector D-129.

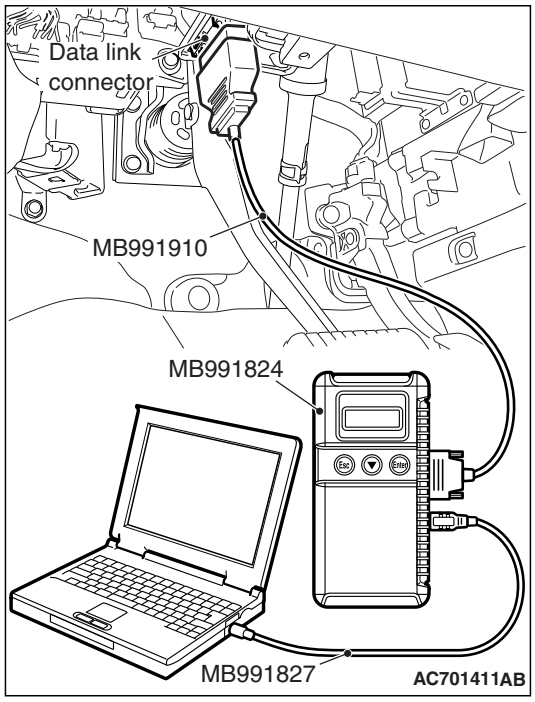

STEP 5. Recheck for diagnostic trouble code.

Check again if the DTC is set.

(1) Erase the DTC.
(2) Turn the ignition switch to the "ON" position.
(3) Check if the DTC is set.
(4) Turn the ignition switch to the "LOCK" (OFF) position.

Q: Is DTC U0175 set?

YES : Replace the SRS-ECU (Refer to P.52B-440).

NO : There is an intermittent malfunction such as poor engaged connector(s) or open circuit (Refer to GROUP 00, How to Cope with Intermittent Malfunction P.00-15).

DTC U0176: Side Impact Sensor (Rear) (RH) Communication Error

Side Impact Sensor (Front, Rear) (RH) Circuit

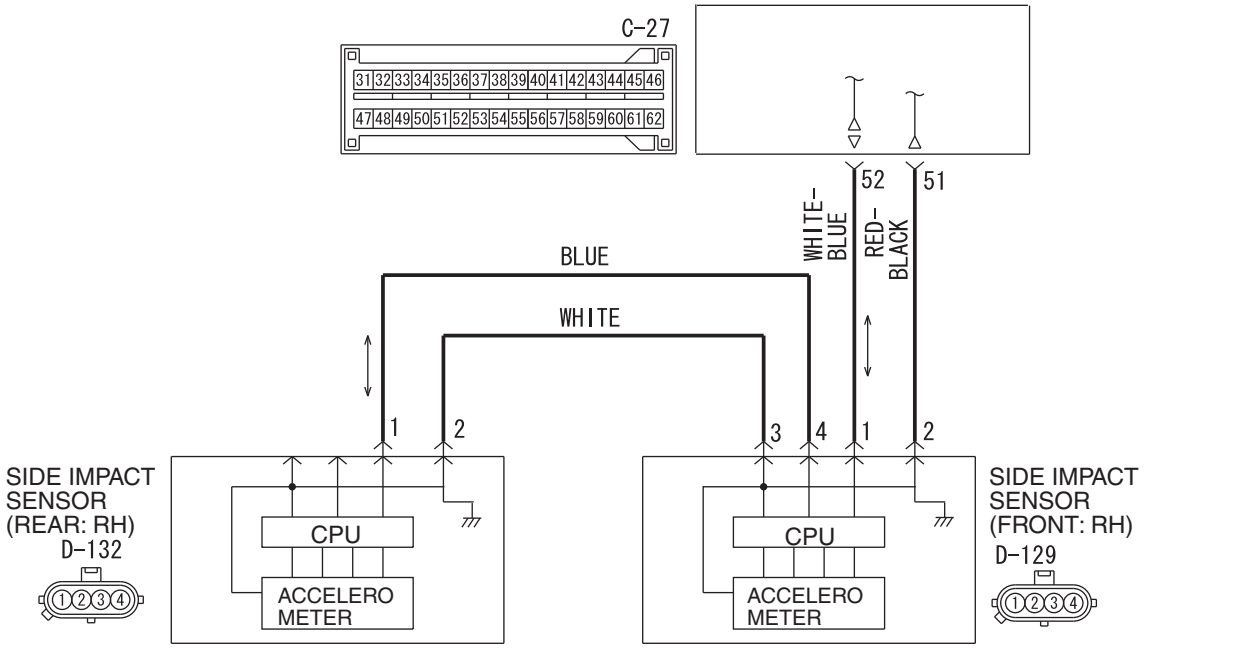

AC803464 AB

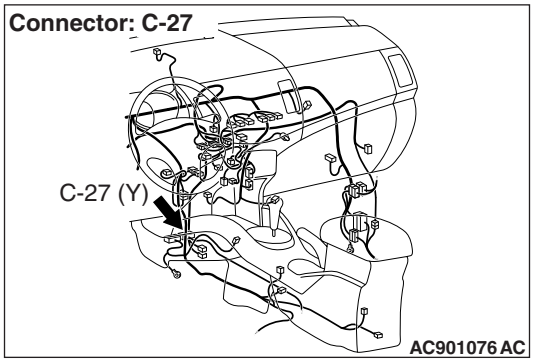

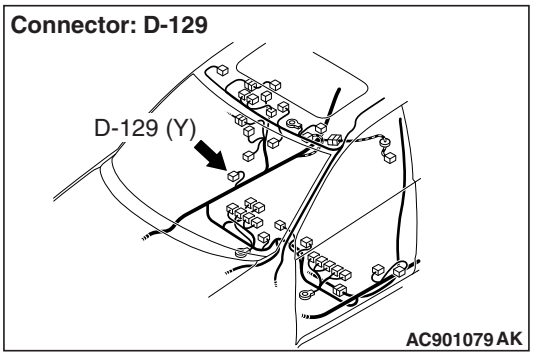

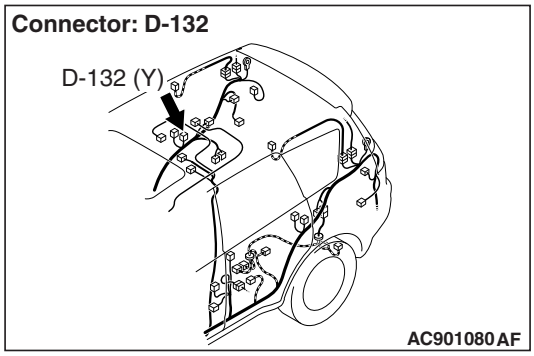

⚠ CAUTION

If DTC U0176 is set in the SRS-ECU, always diagnose the CAN main bus line.

TSB Revision

CIRCUIT OPERATION

If an impact of set value or more is detected, the side impact sensor (rear) sends the coded acceleration data to SRS-ECU via side impact sensor (front). Based on the acceleration data, SRS-ECU determines the necessity of curtain air bag deployment, and then turns ON the power supply circuit to the inflator.

DTC SET CONDITIONS

These DTCs are set if communication between the side impact sensor (rear) (RH) and the SRS-ECU is not possible or faulty.

TROUBLESHOOTING HINTS

- Damaged wiring harnesses or connectors
- Malfunction of the side impact sensor (rear) (RH)
- Malfunction of the SRS-ECU

DIAGNOSIS

Required Special Tools:

- MB991958: Scan Tool (M.U.T.-III Sub Assembly)
  - MB991824: Vehicle Communication Interface (V.C.I.)
  - MB991827: M.U.T.-III USB Cable
  - MB991910: M.U.T.-III Main Harness A (Vehicles with CAN communication system)

STEP 1. Using scan tool MB991958, diagnose the CAN bus line.

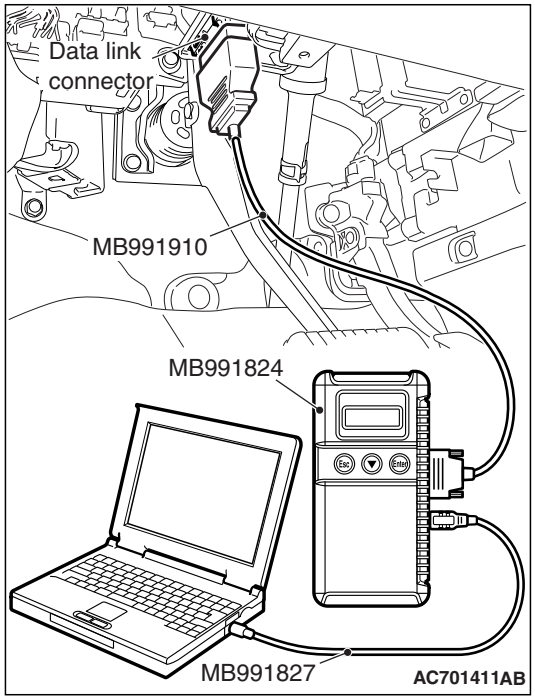

⚠ CAUTION

To prevent damage to scan tool MB991958, always turn the ignition switch to the "LOCK" (OFF) position before connecting or disconnecting scan tool MB991958.

(1) Connect scan tool MB991958. Refer to "How to connect the scan tool P.52B-28."
(2) Turn the ignition switch to the "ON" position.
(3) Diagnose the CAN bus line.
(4) Turn the ignition switch to the "LOCK" (OFF) position.

Q: Is the CAN bus line found to be normal?

YES : Go to Step 2.
NO : Repair the CAN bus line (Refer to GROUP 54C, Diagnosis P.54C-17).

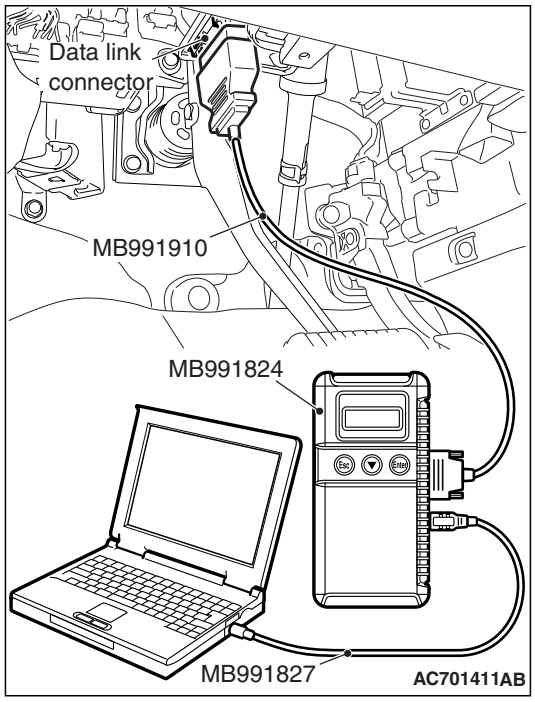

STEP 2. Recheck for diagnostic trouble code.

Check again if the DTC is set.

(1) Erase the DTC.
(2) Turn the ignition switch to the "ON" position.
(3) Check if the DTC is set.
(4) Turn the ignition switch to the "LOCK" (OFF) position.

Q: Is the DTC set?

YES : Go to Step 3.

NO : There is an intermittent malfunction such as poor engaged connector(s) or open circuit (Refer to GROUP 00, How to Cope with Intermittent Malfunction P.00-15).

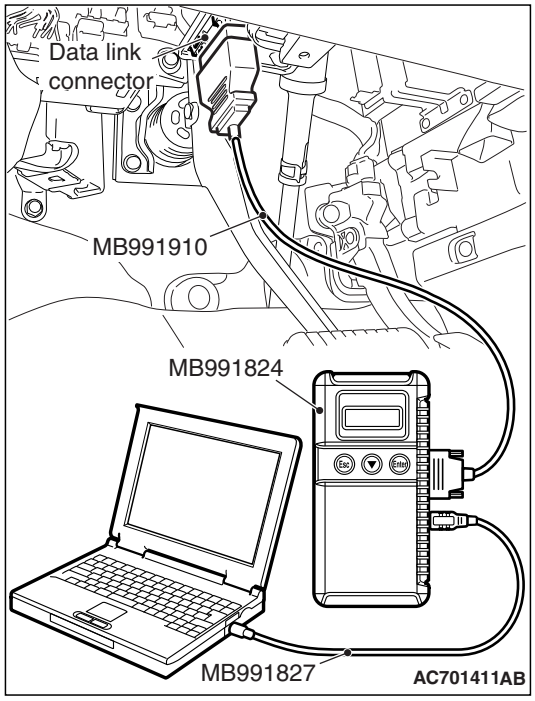

STEP 3. Check for any diagnostic trouble code. (Using scan tool MB991958, read the diagnostic trouble code.)

Check the side impact sensor (rear) (RH).

(1) Disconnect the negative battery terminal.
(2) Alternate the side impact sensor (rear) (RH) and side impact sensor (rear) (LH), and then install the alternated sensors.
(3) Connect the negative battery terminal.
(4) Erase diagnostic trouble code from memory, and check the diagnostic trouble code.

Q: Is DTC U0173 set?

YES : Replace the side impact sensor (rear) (RH) with a new one. (Refer to P.52B-454). Go to Step 5.

NO : Go to Step 4.

STEP 4. Check the harness wires for open circuit and short circuit between side impact sensor (rear) (RH) connector D-132 (terminal No.1 and 2) and side impact sensor (front) (RH) connector D-129 (terminal No.4 and 3).

Q: Are the harness wires between side impact sensor (rear) (RH) connector D-132 (terminal No.1 and 2) and side impact sensor (front) (RH) connector D-129 (terminal No.4 and 3) in good condition?

YES : Go to Step 5.

NO : Repair the harness wires between side impact sensor (rear) (RH) connector D-132 and side impact sensor (front) (RH) connector D-129.

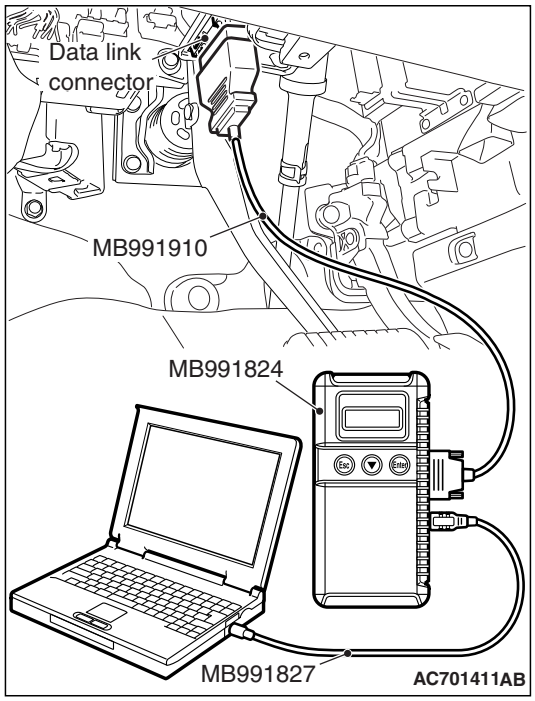

STEP 5. Recheck for diagnostic trouble code.

Check again if the DTC is set.

(1) Erase the DTC.
(2) Turn the ignition switch to the "ON" position.
(3) Check if the DTC is set.
(4) Turn the ignition switch to the "LOCK" (OFF) position.

Q: Is DTC U0176 set?

YES : Replace the SRS-ECU (Refer to P.52B-440).

NO : There is an intermittent malfunction such as poor engaged connector(s) or open circuit (Refer to GROUP 00, How to Cope with Intermittent Malfunction P.00-15).

DTC U0184: Audio CAN Timeout

⚠ CAUTION

- **If the DTC U0184 is set, be sure to diagnose the CAN main bus line.**
- **When replacing the ECU, always check that the communication circuit is normal.**

DTC SET CONDITION

When the signals from radio and CD player or CD changer cannot be received, the SRS-ECU sets the DTC U0184.

JUDGMENT CRITERIA

Because of the CAN-B bus circuit malfunction, if SRS-ECU becomes unable to perform the normal data transmission, SRS-ECU determines that an abnormality is present.

TROUBLESHOOTING HINTS

- The CAN bus line may be defective
- The radio and CD player or CD changer may be defective
- The SRS-ECU may be defective

DIAGNOSIS

Required Special Tools:

- MB991958: Scan Tool (M.U.T.-III Sub Assembly)
  - MB991824: Vehicles Communication Interface (V.C.I.)
  - MB991827: M.U.T.-III USB Cable
  - MB991910: M.U.T.-III Main Harness A (Vehicles with CAN communication system)

STEP 1. Using scan tool MB991958, diagnose the CAN bus line

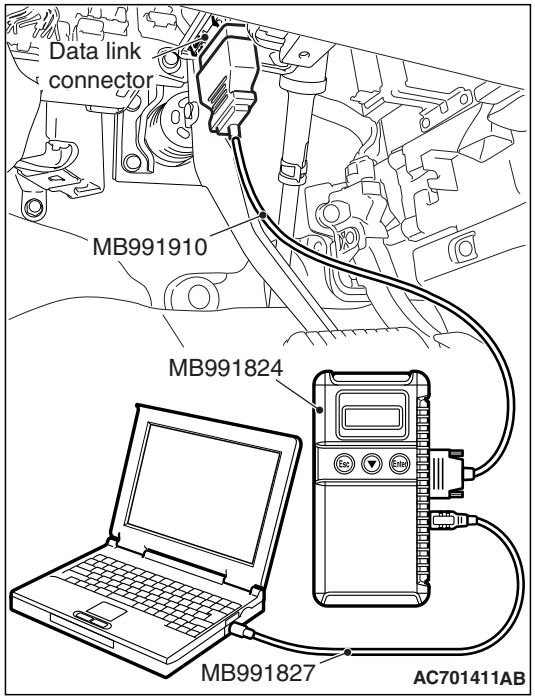

⚠ CAUTION

To prevent damage to scan tool MB991958, always turn the ignition switch to the "LOCK" (OFF) position before connecting or disconnecting scan tool MB991958.

(1) Connect scan tool MB991958. Refer to "How to connect the scan tool P.52B-28."
(2) Turn the ignition switch to the "ON" position.
(3) Diagnose the CAN bus line.
(4) Turn the ignition switch to the "LOCK" (OFF) position.

Q: Is the CAN bus line found to be normal?

YES : Go to Step 2.
NO : Repair the CAN bus line (Refer to GROUP 54C, Diagnosis P.54C-17).

STEP 2. Using scan tool MB991958, read the audio diagnostic trouble code

Check if the DTC is set to the audio.

Q: Is the DTC set?

YES : Diagnose the radio and CD player (Refer to GROUP 54A, Diagnosis P.54A-338). Then go to Step 4.
NO : Go to Step 3.

STEP 3. Using scan tool MB991958, read diagnostic trouble code No. U0184 for other system.

Check if the DTC U0184 is set in ETACS-ECU, occupant classification-ECU, combination meter, A/C-ECU, KOS-ECU or WCM, hands free module, satellite radio tuner.

Q: Is the DTC set?

YES : Replace the radio and CD player (Refer to GROUP 54A, Radio and CD player P.54A-432).
NO : Go to Step 4.

STEP 4. Recheck for diagnostic trouble code.

Check again if the DTC is set to the SRS-ECU.

(1) Erase the DTC.
(2) Turn the ignition switch from "LOCK" (OFF) position to "ON" position.
(3) Check if DTC is set.
(4) Turn the ignition switch to the "LOCK" (OFF) position.

Q: Is the DTC set?

YES : Replace the SRS-ECU.

NO : There is an intermittent malfunction such as poor engaged connector(s) or open circuit (Refer to GROUP 00, How to use Troubleshooting/inspection Service Points P.00-15).

DTC U0195: Satellite Radio Tuner CAN Timeout

⚠ CAUTION

- **If the DTC U0195 is set, be sure to diagnose the CAN main bus line.**
- **When replacing the ECU, always check that the communication circuit is normal.**

DTC SET CONDITION

If the signal from satellite radio tuner cannot be received, the SRS-ECU sets the DTC U0195.

JUDGMENT CRITERIA

Because of the CAN-B bus circuit malfunction, if SRS-ECU becomes unable to perform the normal data transmission, SRS-ECU determines that an abnormality is present.

TROUBLESHOOTING HINTS

- The CAN bus may be defective.
- The satellite radio tuner may be defective.
- The SRS-ECU may be defective.

DIAGNOSIS

Required Special Tools:

- MB991958: Scan Tool (M.U.T.-III Sub Assembly)
  - MB991824: Vehicles Communication Interface (V.C.I.)
  - MB991827: M.U.T.-III USB Cable
  - MB991910: M.U.T.-III Main Harness A (Vehicles with CAN communication system)

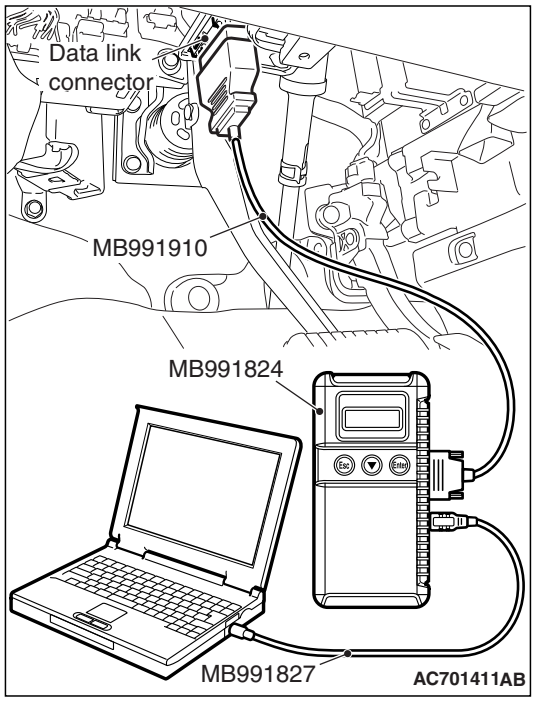

STEP 1. Using scan tool MB991958, diagnose the CAN bus line.

⚠ CAUTION

To prevent damage to scan tool MB991958, always turn the ignition switch to the "LOCK" (OFF) position before connecting or disconnecting scan tool MB991958.

(1) Connect scan tool MB991958. Refer to "How to connect the scan tool P.52B-28."
(2) Turn the ignition switch to the "ON" position.
(3) Diagnose the CAN bus line.
(4) Turn the ignition switch to the "LOCK" (OFF) position.

Q: Is the CAN bus line found to be normal?

YES : Go to Step 2.
NO : Repair the CAN bus line. (Refer to GROUP 54C, Diagnosis P.54C-17).

STEP 2. Using scan tool MB991958, read the satellite radio tuner diagnostic trouble code.

Check if DTC is set to the satellite radio tuner.

Q: Is the DTC set?

YES : Troubleshoot the satellite radio tuner. Then go to Step 4.
NO : Go to Step 3.

STEP 3. Using scan tool MB991958, read diagnostic trouble code No. U0195 for other system.

Check if the DTC U0195 is set in ETACS-ECU, occupant classification-ECU, A/C-ECU, hands free module, CAN box unit, radio and CD player, WCM.

Q: Is the DTC set?

YES : Replace the satellite radio tuner (Refer to GROUP 54A, Satellite Radio Tuner P.54A-685).
NO : Go to Step 4.

STEP 4. Recheck for diagnostic trouble code.

Check again if the DTC is set to the SRS-ECU.

(1) Erase the DTC.
(2) Turn the ignition switch from "LOCK" (OFF) position to "ON" position.
(3) Check if DTC is set.
(4) Turn the ignition switch to the "LOCK" (OFF) position.

Q: Is the DTC set?

YES : Replace the SRS-ECU.

NO : The trouble can be an intermittent malfunction such as a poor connection or open circuit in the CAN bus lines between the satellite radio tuner and the ETACS-ECU. (Refer to GROUP 00, How to Cope with Intermittent Malfunction P.00-15)

DTC U0197: Hands Free Module CAN Timeout

⚠ CAUTION

- **If the DTC U0197 is set, be sure to diagnose the CAN main bus line.**
- **When replacing the ECU, always check that the communication circuit is normal.**

DTC SET CONDITION

When the signals from hands free module cannot be received, the SRS-ECU sets the DTC U0197.

JUDGMENT CRITERIA

Because of the CAN-B bus circuit malfunction, if SRS-ECU becomes unable to perform the normal data transmission, SRS-ECU determines that an abnormality is present.

TROUBLESHOOTING HINTS

- The CAN bus line may be defective.
- The hands free module may be defective.
- The SRS-ECU may be defective.

DIAGNOSIS

Required Special Tools:

- MB991958: Scan Tool (M.U.T.-III Sub Assembly)
  - MB991824: Vehicles Communication Interface (V.C.I.)
  - MB991827: M.U.T.-III USB Cable
  - MB991910: M.U.T.-III Main Harness A (Vehicles with CAN communication system)

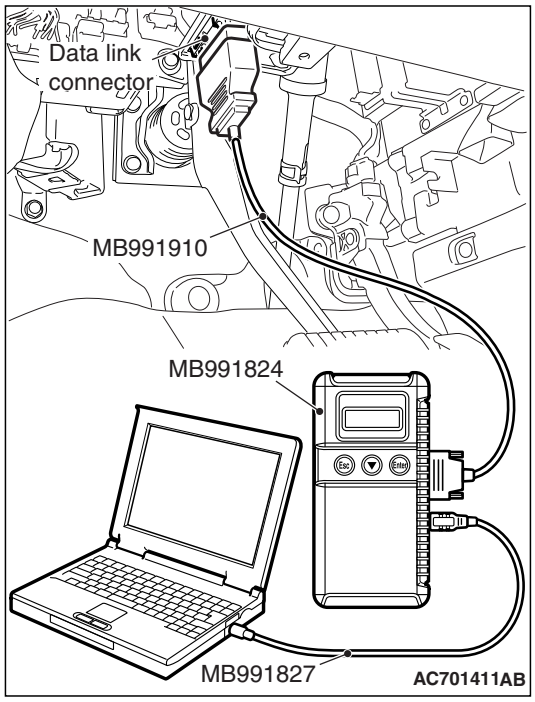

STEP 1. Using scan tool MB991958, diagnose the CAN bus line

⚠ CAUTION

To prevent damage to scan tool MB991958, always turn the ignition switch to the "LOCK" (OFF) position before connecting or disconnecting scan tool MB991958.

(1) Connect scan tool MB991958. Refer to "How to connect the scan tool P.52B-28."
(2) Turn the ignition switch to the "ON" position.
(3) Diagnose the CAN bus line.
(4) Turn the ignition switch to the "LOCK" (OFF) position.

Q: Is the CAN bus line found to be normal?

YES : Go to Step 2.
NO : Repair the CAN bus line. (Refer to GROUP 54C, Diagnosis P.54C-17).

STEP 2. Using scan tool MB991958, read the hands free module diagnostic trouble code

Check if the DTC is set to the hands free module.

Q: Is the DTC set?

YES : Troubleshoot the hands free cellular phone system. Then go to Step 4.
NO : Go to Step 3.

STEP 3. Using scan tool MB991958, read diagnostic trouble code No. U0197 for other system.

check if the DTC U0197 is set in ETACS-ECU, occupant Classification-ECU, combination meter, A/C-ECU, KOS-ECU or WCM, CAN box unit, radio and CD player, satellite radio tuner.

Q: Is the DTC set?

YES : Replace the hands free module (Refer to GROUP 54A, Hands Free Cellular Phone System P.54A-648).
NO : Go to Step 4.

STEP 4. Recheck for diagnostic trouble code.

Check again if the DTC is set to the SRS-ECU.

(1) Erase the DTC.
(2) Turn the ignition switch from "LOCK" (OFF) position to "ON" position.
(3) Check if DTC is set.
(4) Turn the ignition switch to the "LOCK" (OFF) position.

Q: Is the DTC set?

YES : Replace the SRS-ECU.

NO : There is an intermittent malfunction such as poor engaged connector(s) or open circuit (Refer to GROUP 00, How to use Troubleshooting/inspection Service Points P.00-15).

DTC U0212: Steering Wheel Sensor CAN Timeout

⚠ CAUTION

- **If the DTC U0212 is set, be sure to diagnose the CAN main bus line.**
- **When replacing the ECU, always check that the communication circuit is normal.**

DTC SET CONDITION

If the signal from steering wheel sensor cannot be received, the SRS-ECU sets the DTC U0212.

JUDGMENT CRITERIA

Because of the CAN-B bus circuit malfunction, if SRS-ECU becomes unable to perform the normal data transmission, SRS-ECU determines that an abnormality is present.

TROUBLESHOOTING HINTS

- The CAN bus line may be defective
- The ETACS-ECU may be defective
- The SRS-ECU may be defective

DIAGNOSIS

Required Special Tools:

- MB991958: Scan Tool (M.U.T.-III Sub Assembly)
  - MB991824: Vehicles Communication Interface (V.C.I.)
  - MB991827: M.U.T.-III USB Cable
  - MB991910: M.U.T.-III Main Harness A (Vehicles with CAN communication system)

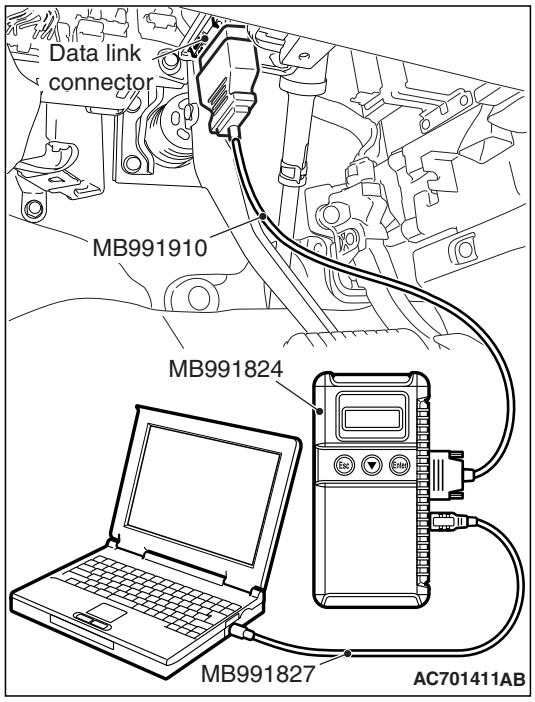

STEP 1. Using scan tool MB991958, diagnose the CAN bus line

⚠ CAUTION

To prevent damage to scan tool MB991958, always turn the ignition switch to the "LOCK" (OFF) position before connecting or disconnecting scan tool MB991958.

(1) Connect scan tool MB991958. Refer to "How to connect the scan tool P.52B-28."
(2) Turn the ignition switch to the "ON" position.
(3) Diagnose the CAN bus line.
(4) Turn the ignition switch to the "LOCK" (OFF) position.

Q: Is the CAN bus line found to be normal?

YES : Go to Step 2.
NO : Repair the CAN bus line. (Refer to GROUP 54C, Diagnosis P.54C-17).

STEP 2. Using scan tool MB991958, read the steering wheel sensor diagnostic trouble code

Check if the DTC is set to the steering wheel sensor.

Q: Is the DTC set?

YES : Diagnose the steering wheel sensor (Refer to GROUP 35C, Diagnosis P.35C-24). then go to Step 3.
NO : Go to Step 3.

STEP 3. Recheck for diagnostic trouble code.

Check again if the DTC is set to the SRS-ECU.

(1) Erase the DTC.
(2) Turn the ignition switch from "LOCK" (OFF) position to "ON" position.
(3) Check if DTC is set.
(4) Turn the ignition switch to the "LOCK" (OFF) position.

Q: Is the DTC set?

YES : Replace the SRS-ECU.
NO : There is an intermittent malfunction such as poor engaged connector(s) or open circuit (Refer to GROUP 00, How to use Troubleshooting/inspection Service Points P.00-15).

DTC U1414: Defective Coding Data

⚠ CAUTION

- **If the DTC U1414 is set, diagnose the CAN main bus lines.**
- **When replacing the ECU, always check that the communication circuit is normal.**

DTC SET CONDITION

If an incorrect information data is written in the SRS-ECU, it sets DTC No. U1414.

JUDGMENT CRITERIA

When the coding data (vehicle information) from ETACS-ECU is not received, SRS-ECU determines that the abnormality is present.

TROUBLESHOOTING HINTS

- The CAN bus line may be defective
- The ETACS-ECU may be defective
- The SRS-ECU may be defective

DIAGNOSIS

Required Special Tools:

- MB991958: Scan Tool (M.U.T.-III Sub Assembly)
  - MB991824: Vehicles Communication Interface (V.C.I.)
  - MB991827: M.U.T.-III USB Cable
  - MB991910: M.U.T.-III Main Harness A (Vehicles with CAN communication system)

STEP 1. Using scan tool MB991958, diagnose the CAN bus line

⚠ CAUTION

To prevent damage to scan tool MB991958, always turn the ignition switch to the "LOCK" (OFF) position before connecting or disconnecting scan tool MB991958.

(1) Connect scan tool MB991958. Refer to "How to connect the scan tool P.52B-28."
(2) Turn the ignition switch to the "ON" position.
(3) Diagnose the CAN bus line.
(4) Turn the ignition switch to the "LOCK" (OFF) position.

Q: Is the CAN bus line found to be normal?

YES : Go to Step 2.
NO : Repair the CAN bus line. (Refer to GROUP 54C, Diagnosis P.54C-17).

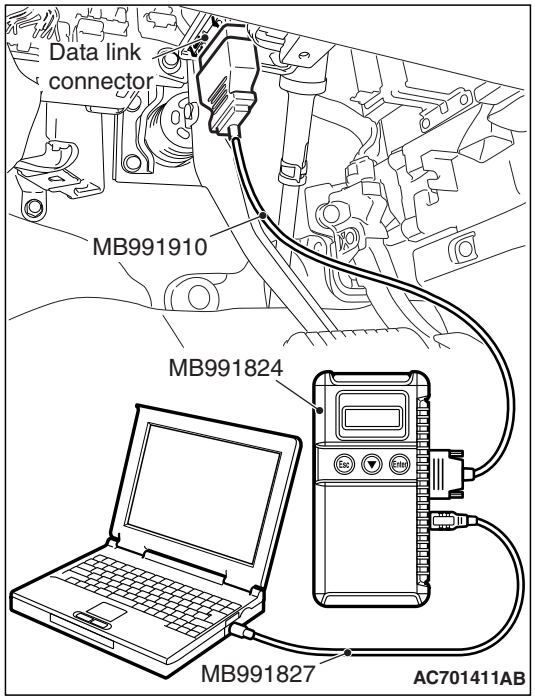

STEP 2. Using scan tool MB991958, read the ETACS-ECU diagnostic trouble code

Check if DTC Nos. U0331, B1761, B222C, B2206, or B2215 is set to the ETACS-ECU.

Q: Is the DTC set?

YES : Diagnose the ETACS-ECU (Refer to GROUP 54A, Diagnosis P.54A-742).

NO : Go to Step 3.

STEP 3. Recheck for diagnostic trouble code.

Check again if the DTC is set to the SRS-ECU.

(1) Erase the DTC.
(2) Turn the ignition switch from "LOCK" (OFF) position to "ON" position.
(3) Check if DTC is set.
(4) Turn the ignition switch to the "LOCK" (OFF) position.

Q: Is the DTC set?

YES : Replace the SRS-ECU.

NO : There is an intermittent malfunction such as poor engaged connector(s) or open circuit (Refer to GROUP 00, How to use Troubleshooting/inspection Service Points P.00-15).

DTC U1415: Coding not Completed/Data Fail

⚠ CAUTION

- **If the DTC U1415 is set, diagnose the CAN main bus lines.**
- **When replacing the ECU, always check that the communication circuit is normal.**

DTC SET CONDITION

If the vehicle information data is not registered to the SRS-ECU, the SRS-ECU sets the DTC U1415.

JUDGMENT CRITERIA

With the global coding counter value "0", if all the global coding data (vehicle information) are not stored, the SRS-ECU determines that a problem has occurred.

TROUBLESHOOTING HINTS

- The CAN bus line may be defective
- The ETACS-ECU may be defective
- The SRS-ECU may be defective

DIAGNOSIS

Required Special Tools:

- MB991958: Scan Tool (M.U.T.-III Sub Assembly)
  - MB991824: Vehicles Communication Interface (V.C.I.)
  - MB991827: M.U.T.-III USB Cable
  - MB991910: M.U.T.-III Main Harness A (Vehicles with CAN communication system)

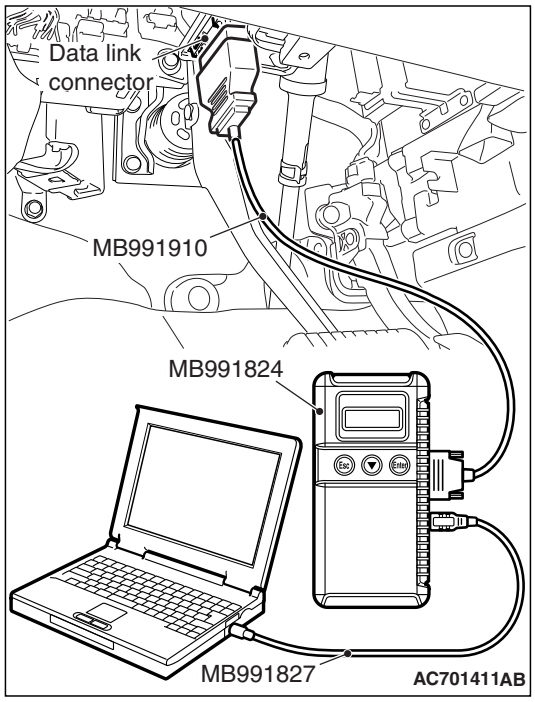

STEP 1. Using scan tool MB991958, diagnose the CAN bus line

⚠ CAUTION

To prevent damage to scan tool MB991958, always turn the ignition switch to the "LOCK" (OFF) position before connecting or disconnecting scan tool MB991958.

(1) Connect scan tool MB991958. Refer to "How to connect the scan tool P.52B-28."
(2) Turn the ignition switch to the "ON" position.
(3) Diagnose the CAN bus line.
(4) Turn the ignition switch to the "LOCK" (OFF) position.

Q: Is the CAN bus line found to be normal?

YES : Go to Step 2.
NO : Repair the CAN bus line. (Refer to GROUP 54C, Diagnosis P.54C-17).

STEP 2. Using scan tool MB991958, read the ETACS-ECU diagnostic trouble code

Check if DTC Nos. U0331, B1761, B222C, B2206, or B2215 is set to the ETACS-ECU.

Q: Is the DTC set?

YES : Diagnose the ETACS-ECU (Refer to GROUP 54A, Diagnosis P.54A-742).
NO : Go to Step 3.

STEP 3. Recheck for diagnostic trouble code.

Check again if the DTC is set to the SRS-ECU.
(1) Erase the DTC.
(2) Turn the ignition switch from "LOCK" (OFF) position to "ON" position.
(3) Check if DTC is set.
(4) Turn the ignition switch to the "LOCK" (OFF) position.

Q: Is the DTC set?

YES : Replace the SRS-ECU.
NO : There is an intermittent malfunction such as poor engaged connector(s) or open circuit (Refer to GROUP 00, How to use Troubleshooting/inspection Service Points P.00-15).

DIAGNOSTIC TROUBLE CODE CHART <Occupant classification-ECU>

M1524003301479

⚠ CAUTION

During diagnosis, a DTC code associated with another system may be set when the ignition switch is turned on with connector(s) disconnected. After completing the repair, confirm all systems for DTC code(s). If DTC code(s) are set, erase them all.

Inspect according to the inspection chart that is appropriate for the DTC.

Diagnostic trouble Code No.	Inspection item	Reference page
B1B78	Passenger seat weight sensor (front: LH) performance	P.52B-348
B1B79	Passenger seat weight sensor (ground side) short-circuited (front: LH)	P.52B-352
B1B7A	Passenger seat weight sensor (power supply side) short-circuited or open (front: LH)	P.52B-356
B1B7D	Passenger seat weight sensor (front: RH) performance	P.52B-348
B1B7E	Passenger seat weight sensor (ground side) short-circuited (front: RH)	P.52B-352
B1B7F	Passenger seat weight sensor (power supply side) short-circuited or open (front: RH)	P.52B-356
B1B82	Passenger seat weight sensor (rear: LH) performance	P.52B-348
B1B83	Passenger seat weight sensor (ground side) short-circuited (rear: LH)	P.52B-352
B1B84	Passenger seat weight sensor (power supply side) short-circuited or open (rear: LH)	P.52B-356
B1B87	Passenger seat weight sensor (rear: RH) performance	P.52B-348
B1B88	Passenger seat weight sensor (ground side) short-circuited (rear: RH)	P.52B-352
B1B89	Passenger seat weight sensor (power supply side) short-circuited or open (rear: RH)	P.52B-356
B1B8C	Driver seat slide sensor circuit performance	P.52B-361
B1B8D	Driver seat slide sensor open circuit	P.52B-366
B1B8E	Driver seat slide sensor (power supply side) short circuit	P.52B-370
B1B91	Driver seat slide sensor configuration mismatch	P.52B-373
B1BA7	Occupant classification system verification required	P.52B-356
B1BA8	Occupant classification-ECU out of calibration/Not calibrated	P.52B-376
B1BBA	Passenger seat weight sensor power supply circuit	P.52B-378
B1BBC	Occupant classification system negative system weight	P.52B-380
B1BBD	Occupant classification -ECU current configuration table unprogrammed	P.52B-382

Diagnostic trouble Code No.	Inspection item	Reference page
B1C23	Passenger seat weight sensor (front: LH) configuration mismatch	P.52B-383
B1C24	Passenger seat weight sensor (front: RH) configuration mismatch	P.52B-383
B1C25	Passenger seat weight sensor (rear: LH) configuration mismatch	P.52B-383
B1C26	Passenger seat weight sensor (rear: RH) configuration mismatch	P.52B-383
B1CB2	Occupant classification-ECU parameter table incompatible	P.52B-385
B210D	Battery voltage low	P.52B-387
B210E	Battery voltage high	P.52B-387
B2206	Chassis number does not match	P.52B-391
B2212	Occupant classification-ECU internal failure	P.52B-385
B2250	Occupant classification-ECU not programmed/flash required	P.52B-385
B2262	Occupant classification-ECU electrostatic discharge event detected	P.52B-385
U0020	CAN-B Bus off performance	P.52B-393
U0021	CAN-B Bus(H1) circuit open	P.52B-393
U0022	CAN-B Bus(H1) shorted to circuit ground	P.52B-393
U0023	CAN-B Bus(H1) shorted to circuit power supply	P.52B-393
U0024	CAN-B Bus(L0) circuit open	P.52B-393
U0025	CAN-B Bus(L0) shorted to circuit ground	P.52B-393
U0026	CAN-B Bus(L0) shorted to circuit power supply	P.52B-393
U0141	ETACS CAN timeout	P.52B-394
U0151	SRS-ECU CAN timeout	P.52B-396
U0155	Combination meter CAN timeout	P.52B-398
U0164	A/C-ECU CAN timeout	P.52B-400
U0168	KOS-ECU or WCM CAN timeout	P.52B-402
U0184	Audio CAN timeout	P.52B-404
U0195	Satellite radio tuner CAN timeout	P.52B-406
U0197	Hands free module CAN timeout	P.52B-408
U0245	Audio visual navigation unit CAN timeout	P.52B-410
U1419	The signal from a weight sensor (front: LH) is unusual	P.52B-412
U141A	The signal from a weight sensor (front: RH) is unusual	P.52B-412
U141B	The signal from a weight sensor (rear: LH) is unusual	P.52B-412
U141C	The signal from a weight sensor (rear: RH) is unusual	P.52B-412
U1423	The signal from a weight sensor is unusual	P.52B-412

DIAGNOSTIC TROUBLE CODE PROCEDURES <OCCUPANT CLASSIFICATION-ECU>

DTC B1B78: Passenger Seat Weight Sensor (front: LH) Performance
DTC B1B7D: Passenger Seat Weight Sensor (front: RH) Performance
DTC B1B82: Passenger Seat Weight Sensor (rear: LH) Performance
DTC B1B87: Passenger Seat Weight Sensor (rear: RH) Performance

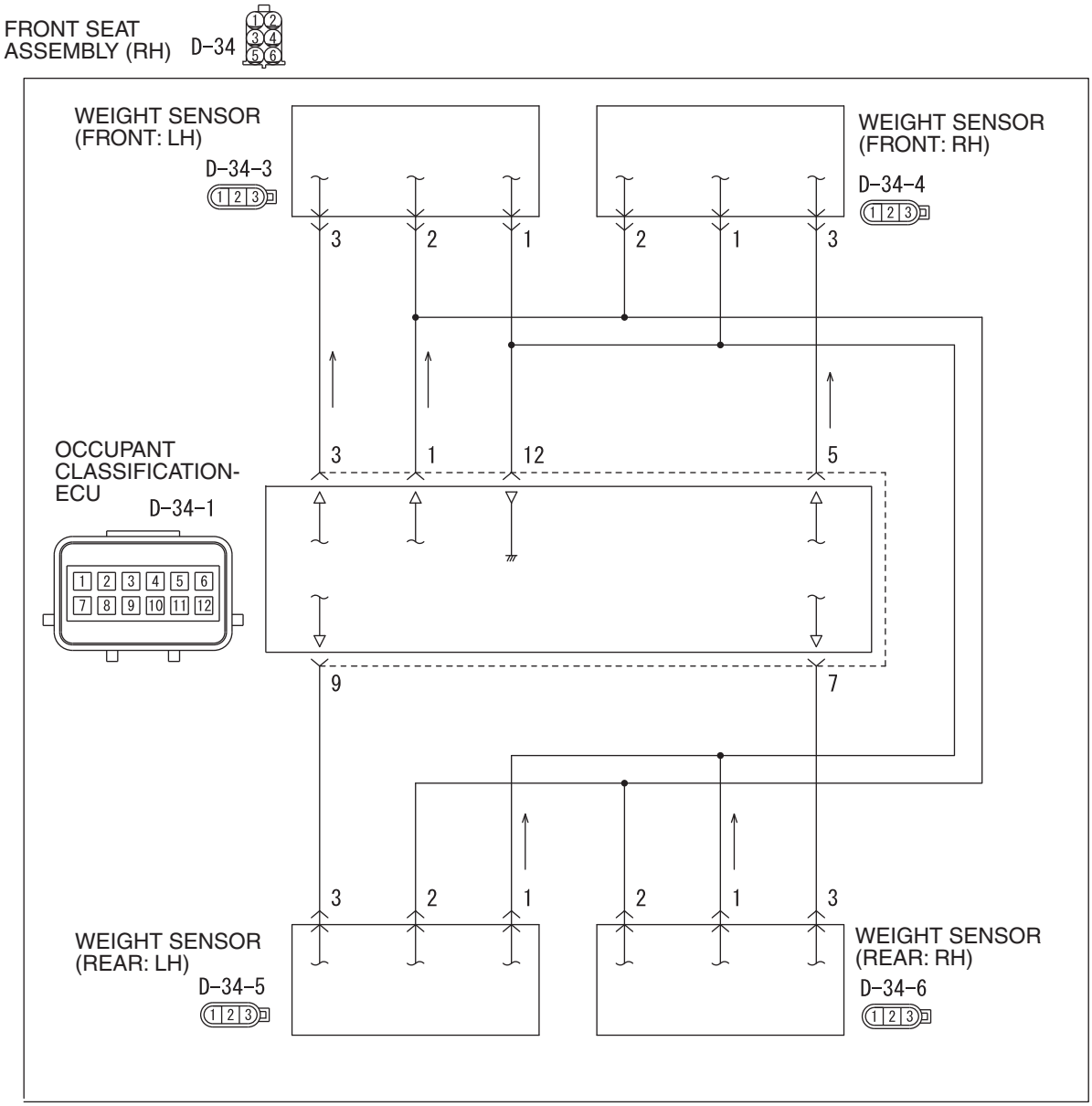

AC803887AB

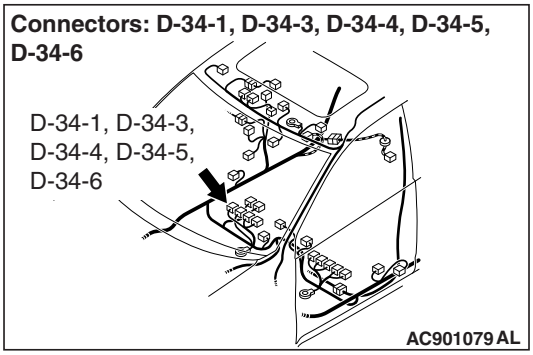

⚠ CAUTION

If DTC B1B78, B1B7D, B1B82 or B1B87 is set in the occupant classification-ECU, always diagnose the CAN main bus lines.

CIRCUIT OPERATION

The load data from the weight sensor is classified with the occupant classification-ECU, and its classified information is send to SRS-ECU by CAN bus line. The SRS-ECU determines the air bag deployment based on this classified information, and controls the power supply circuit to the inflator.

DTC SET CONDITIONS

This DTC is set if the weight sensor output voltage is out of the range (guideline: 1 to 3.5 V).

TROUBLESHOOTING HINTS

- The weight sensor may be defective.
- Occupant classification-ECU may be defective.
- The wiring harness or connectors may have loose, corroded, or damaged terminals, or terminals pushed back in the connector

DIAGNOSIS

Required Special Tools:

- MB991958 Scan Tool (M.U.T.-III Sub Assembly)
  - MB991824: Vehicle Communication Interface (V.C.I.)
  - MB991827 M.U.T.-III USB Cable
  - MB991910 M.U.T.-III Main Harness A (Vehicles with CAN communication system)

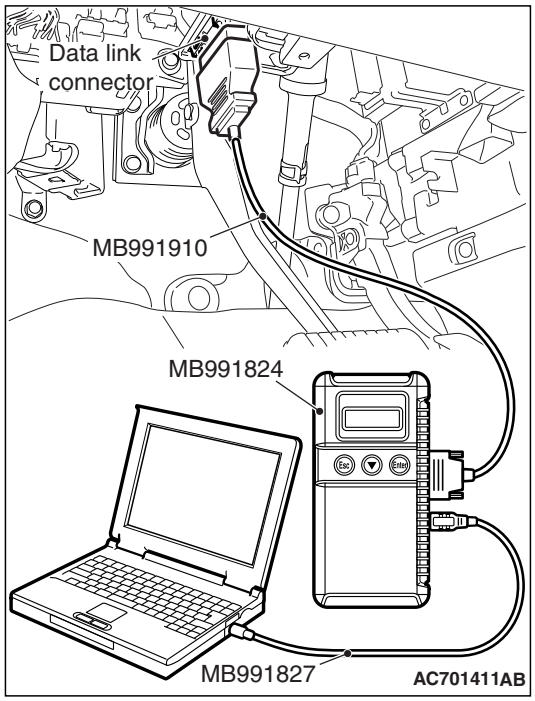

STEP 1. Using scan tool MB991958, diagnose the CAN bus line.

⚠ CAUTION

To prevent damage to scan tool MB991958, always turn the ignition switch to the "LOCK" (OFF) position before connecting or disconnecting scan tool MB991958.

(1) Connect scan tool MB991958. Refer to "How to connect the scan tool P.52B-28."
(2) Turn the ignition switch to the "ON" position.
(3) Diagnose the CAN bus line.
(4) Turn the ignition switch to the "LOCK" (OFF) position.

Q: Is the CAN bus line found to be normal?

YES : Go to Step 2.
NO : Repair the CAN bus line (Refer to GROUP 54C, Diagnosis P.54C-17).

STEP 2. Recheck for diagnostic trouble code.

Check again if the DTC is set.
(1) Erase the DTC.
(2) Turn the ignition switch to the "ON" position.
(3) Check if the DTC is set.
(4) Turn the ignition switch to the "LOCK" (OFF) position.

Q: Is the DTC set?

YES : Go to Step 3.
NO : There is an intermittent malfunction such as poor engaged connector(s) or open circuit (Refer to GROUP 00, How to Cope with Intermittent Malfunction P.00-15).

STEP 3. Check occupant classification-ECU connector D-34-1 and weight sensor connector D-34-3, D-34-4, D-34-5 or D-34-6 for loose, corroded or damaged terminals, or terminals pushed back in the connector.

Q: Is the check result normal?

YES : Go to Step 4.
NO : Replace the component(s) (Refer to GROUP 00E, Harness Connector Inspection P.00E-2).

STEP 4. Check the wiring harness between occupant classification-ECU connector D-34-1 (terminal 3, 5, 7, and 9) and weight sensors D-34-3, D-34-4, D-34-5, and D-34-6 (terminal 3).

Q: Is the check result normal?

YES : Go to Step 5.

NO : The wiring harness may be damaged or the connector(s) may have loose, corroded or damaged terminals, or terminals pushed back in the connector. Repair the wiring harness as necessary.

STEP 5. Recheck for diagnostic trouble code.

Check again if the DTC is set to the occupant classification-ECU.

(1) Erase the DTC.
(2) Turn the ignition switch from "LOCK" (OFF) position to "ON" position.
(3) Check if DTC is set.
(4) Turn the ignition switch to the "LOCK" (OFF) position.

Q: Is the DTC set?

YES : Replace the passenger seat cushion frame assembly (Refer to GROUP 52A, Front Seat Assembly P.52A-17).

NO : There is an intermittent malfunction such as poor engaged connector(s) or open circuit (Refer to GROUP 00, How to Cope with Intermittent Malfunction P.00-15).

DTC B1B79: Passenger Seat Weight Sensor (ground side) Short-circuited (front: LH)
DTC B1B7E: Passenger Seat Weight Sensor (ground side) Short-circuited (front: RH)
DTC B1B83: Passenger Seat Weight Sensor (ground side) Short-circuited (rear: LH)
DTC B1B88: Passenger Seat Weight Sensor (ground side) Short-circuited (rear: RH)

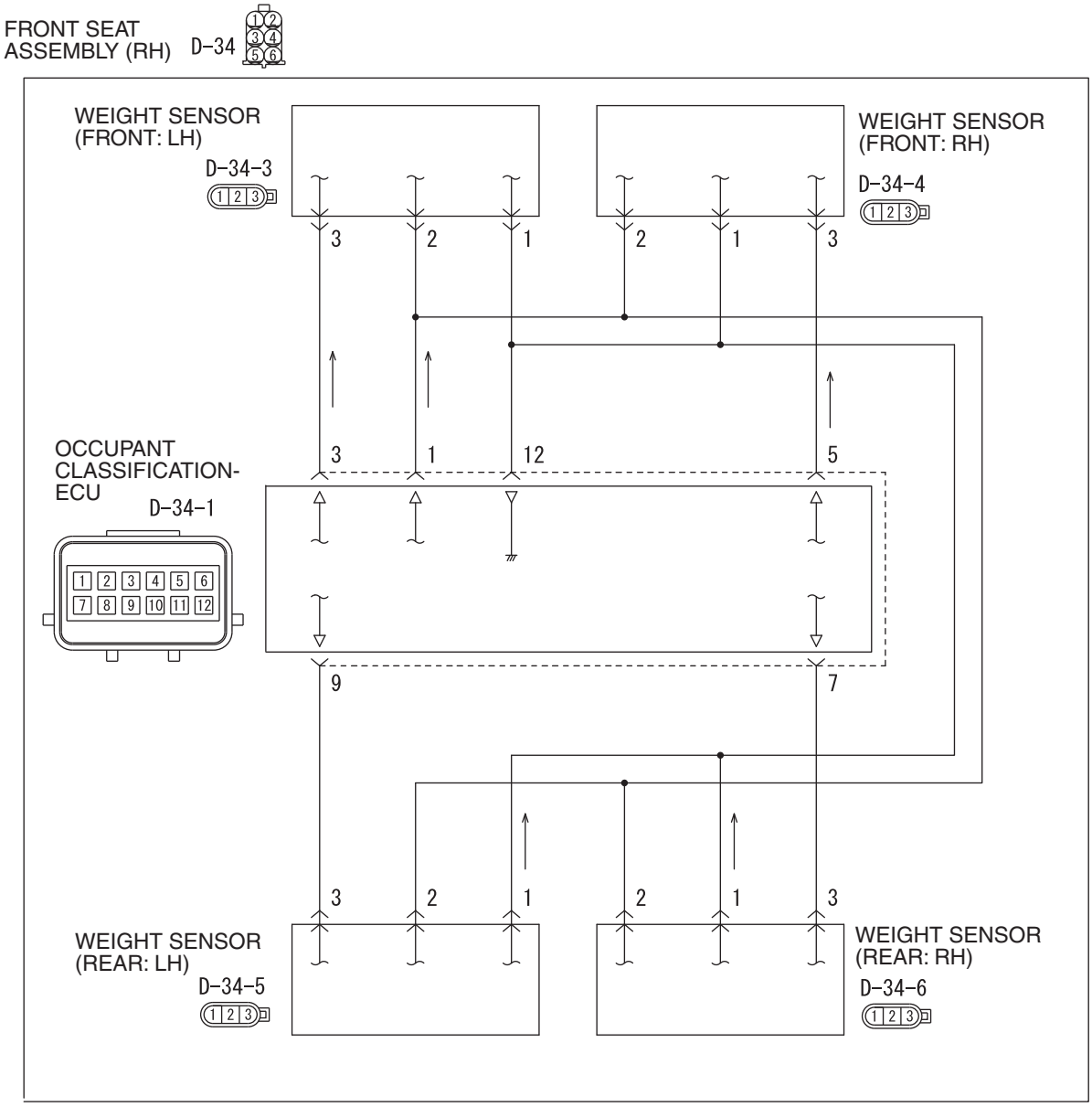

AC803887AB

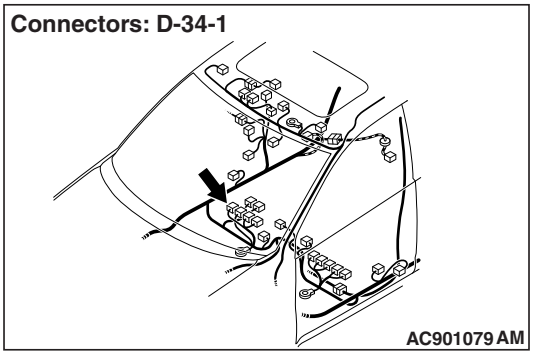

⚠ CAUTION

If DTC B1B79, B1B7E, B1B83 or B1B88 is set in the occupant classification-ECU, always diagnose the CAN main bus lines.

CIRCUIT OPERATION

The load data from the weight sensor is classified with the occupant classification-ECU, and its classified information is send to SRS-ECU by CAN bus line. The SRS-ECU determines the air bag deployment based on this classified information, and controls the power supply circuit to the inflator.

DTC SET CONDITIONS

This DTC is see if the weight sensor wire are short-circuited to the ground.

TROUBLESHOOTING HINTS

- Disengaged wire harnesses or connector
- Short to the ground in the weight sensor harness
- Malfunction of the weight sensor
- Malfunction of the occupant classification-ECU

DIAGNOSIS

Required Special Tools:

- MB991958: Scan Tool (M.U.T.-III Sub Assembly)
  - MB991824: Vehicle Communication Interface (V.C.I.)
  - MB991827: M.U.T.-III USB Cable
  - MB991910: M.U.T.-III Main Harness A (Vehicles with CAN Communication System)

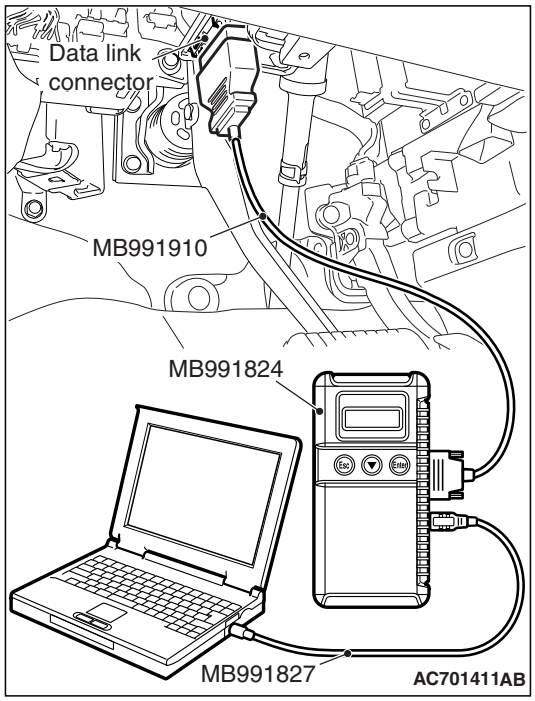

STEP 1. Using scan tool MB991958, diagnose the CAN bus line.

⚠ CAUTION

To prevent damage to scan tool MB991958, always turn the ignition switch to the "LOCK" (OFF) position before connecting or disconnecting scan tool MB991958.

(1) Connect scan tool MB991958. Refer to "How to connect the scan tool P.52B-28."
(2) Turn the ignition switch to the "ON" position.
(3) Diagnose the CAN bus line.
(4) Turn the ignition switch to the "LOCK" (OFF) position.

Q: Is the CAN bus line found to be normal?

YES : Go to Step 2.
NO : Repair the CAN bus line (Refer to GROUP 54C, Diagnosis P.54C-17).

STEP 2. Recheck for diagnostic trouble code.

Check again if the DTC is set.
(1) Erase the DTC.
(2) Turn the ignition switch to the "ON" position.
(3) Check if the DTC is set.
(4) Turn the ignition switch to the "LOCK" (OFF) position.

Q: Is the DTC set?

YES : Go to Step 3.
NO : There is an intermittent malfunction such as poor engaged connector(s) or open circuit (Refer to GROUP 00, How to Cope with Intermittent Malfunction P.00-15).

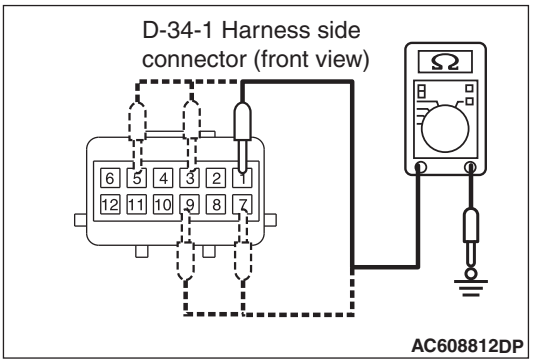

STEP 3. Measure the resistance at occupant classification-ECU connector D-34-1.

(1) Disconnect the connector D-34-1.
(2) Disconnect weight sensor connector D-34-3, D-34-4, D-34-5 or D-34-6.
(3) Check for continuity between D-34-1 harness side connector terminals 1, 3, 5, 7, 9 and body ground. It should be open circuit.

Q: Is it open circuit?

YES : Go to Step 4.

NO : Repair the wiring harness between occupant classification-ECU connector D-34-1 terminals 3, 5, 9, 7 and weight sensor connector D-34-3, 4, 5, 6 terminals 3 (signal line) or occupant classification-ECU connector D-34-1 terminals 1 and weight sensor connector D-34-3 terminals 2 (power supply line). Then go to Step 4.

STEP 4. Recheck for diagnostic trouble code.

Check again if the DTC is set.
(1) Erase the DTC.
(2) Turn the ignition switch to the "ON" position.
(3) Check if the DTC is set.
(4) Turn the ignition switch to the "LOCK" (OFF) position.

Q: Is DTCs B1B79, B1B7E, B1B83, B1B88 set?

YES : Replace the passenger seat cushion frame assembly (Refer to GROUP 52A, Front Seat Assembly P.52A-17).

NO : There is an intermittent malfunction such as poor engaged connector(s) or open circuit (Refer to GROUP 00, How to Cope with Intermittent Malfunction P.00-15).

DTC B1B7A: Passenger Seat Weight Sensor (power supply side) Short-circuited or Open (front: LH)
DTC B1B7F: Passenger Seat Weight Sensor (power supply side) Short-circuited or Open (front: RH)
DTC B1B84: Passenger Seat Weight Sensor (power supply side) Short-circuited or Open (rear: LH)
DTC B1B89: Passenger Seat Weight Sensor (power supply side) Short-circuited or Open (rear: RH)

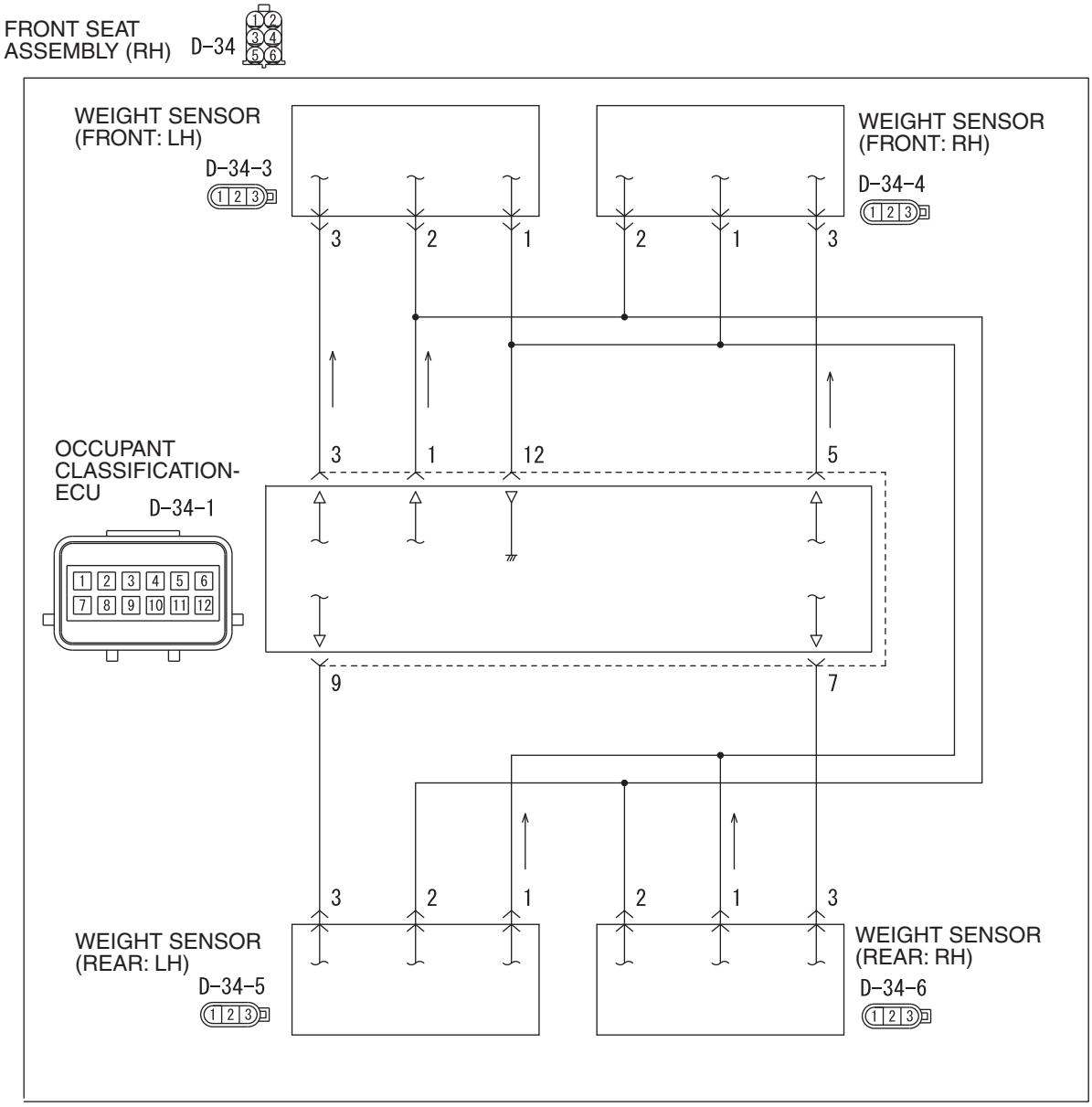

AC803887AB

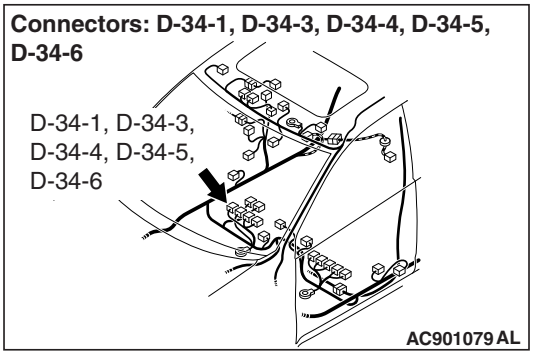

⚠ CAUTION

If DTC B1B7A, B1B7F, B1B84 or B1B89 is set in the occupant classification-ECU, always diagnose the CAN main bus lines.

CIRCUIT OPERATION

The load data from the weight sensor is classified with the occupant classification-ECU, and its classified information is send to SRS-ECU by CAN bus line. The SRS-ECU determines the air bag deployment based on this classified information, and controls the power supply circuit to the inflator.

DTC SET CONDITIONS

- This DTC is set if the weight sensor wire are short-circuited to the power supply.
- This DTC is set if the weight sensor wire are open circuit

TROUBLESHOOTING HINTS

- Damaged wiring harnesses or connectors
- Short to the power supply in the weight sensor harness
- Open circuit in the weight sensor harness
- Malfunction of the weight sensor
- Malfunction of the occupant classification-ECU

DIAGNOSIS

Required Special Tools:

- MB991958: Scan Tool (M.U.T.-III Sub Assembly)
  - MB991824: Vehicle Communication Interface (V.C.I.)
  - MB991827: M.U.T.-III USB Cable
  - MB991910: M.U.T.-III Main Harness A (Vehicles with CAN communication system)

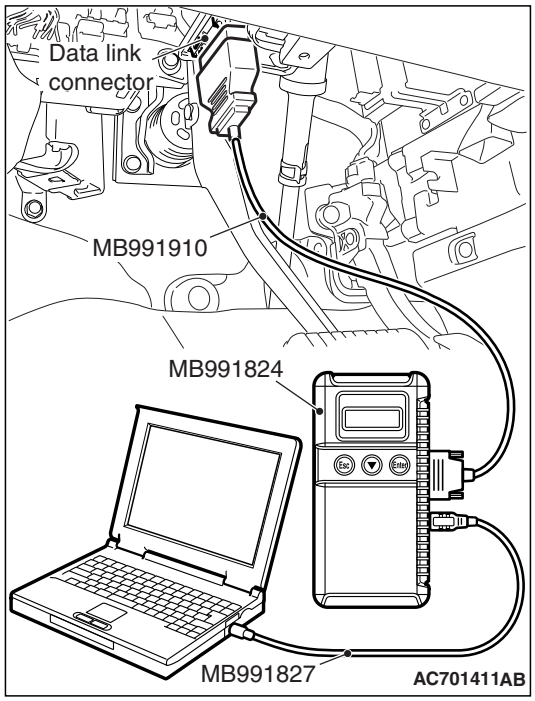

STEP 1. Using scan tool MB991958, diagnose the CAN bus line.

⚠ CAUTION

To prevent damage to scan tool MB991958, always turn the ignition switch to the "LOCK" (OFF) position before connecting or disconnecting scan tool MB991958.

(1) Connect scan tool MB991958. Refer to "How to connect the scan tool P.52B-28."
(2) Turn the ignition switch to the "ON" position.
(3) Diagnose the CAN bus line.
(4) Turn the ignition switch to the "LOCK" (OFF) position.

Q: Is the CAN bus line found to be normal?

YES : Go to Step 2.
NO : Repair the CAN bus line (Refer to GROUP 54C, Diagnosis P.54C-17).

STEP 2. Recheck for diagnostic trouble code.

Check again if the DTC is set.
(1) Erase the DTC.
(2) Turn the ignition switch to the "ON" position.
(3) Check if the DTC is set.
(4) Turn the ignition switch to the "LOCK" (OFF) position.

Q: Is the DTCs set?

YES : Go to Step 3.
NO : There is an intermittent malfunction such as poor engaged connector(s) or open circuit (Refer to GROUP 00, How to Cope with Intermittent Malfunction P.00-15).

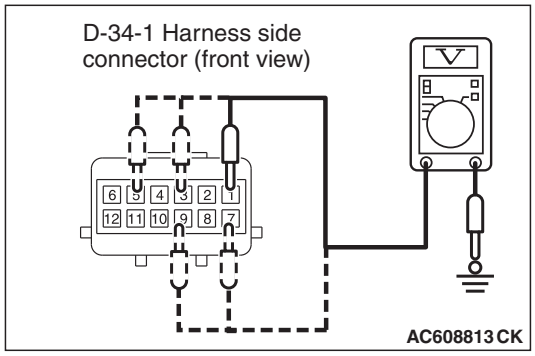

STEP 3. Measure the voltage at occupant classification-ECU connector D-34-1.

(1) Disconnect the connector D-34-1.
(2) Disconnect weight sensor connector D-34-3, D-34-4, D-34-5 or D-34-6.
(3) Turn the ignition switch to the "ON" position.
(4) Measure the voltage between terminals 1, 3, 5, 7, 9 and body ground.
Voltage should measure 1 volt or less.

Q: Is the measured voltage within the specified range?

YES : Go to Step 4.

NO : Repair the wiring harness between occupant classification-ECU connector D-34-1 terminals 3, 5, 9, 7 and weight sensor connector D-34-3, 4, 5, 6 terminals 3 (signal line) or occupant classification-ECU connector D-34-1 terminals 1 and weight sensor connector D-34-3 terminals 2 (power supply line). Then go to Step 4.

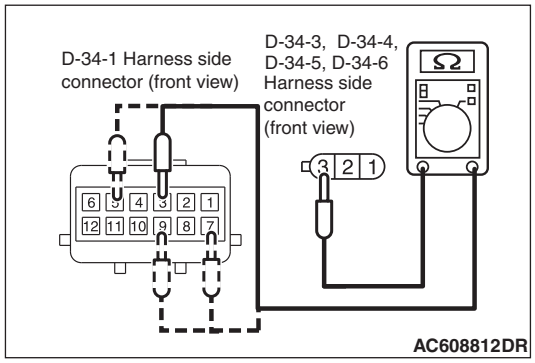

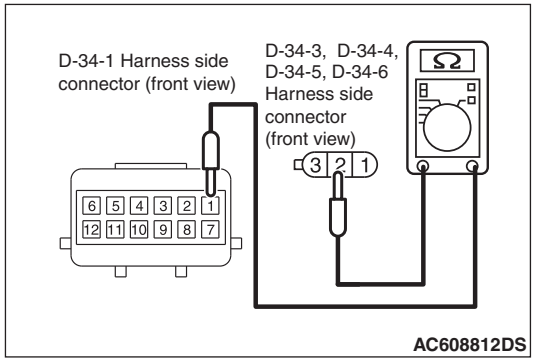

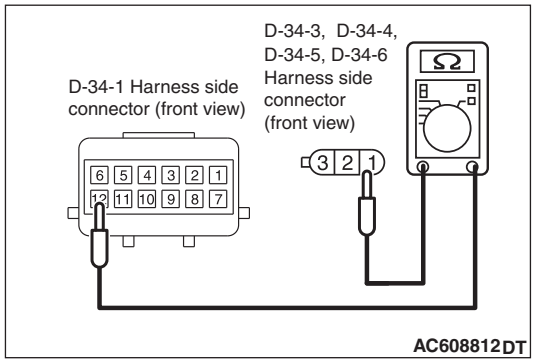

STEP 4. Check the harness open circuit between occupant classification-ECU connector D-34-1 and weight sensor connector D-34-3, D-34-4, D-34-5 or D-34-6.

(1) Disconnect occupant classification-ECU connector D-34-1 and weight sensor connector D-34-3, D-34-4, D-34-5 or D-34-6.

(2) Check for continuity between the following terminals. It should be less than 2 ohms.
- Occupant classification-ECU connector D-34-1 (terminal No.3) and the weight sensor connector D-34-3 (terminal No.3)
- Occupant classification-ECU connector D-34-1 (terminal No.5) and the weight sensor connector D-34-4 (terminal No.3)
- Occupant classification-ECU connector D-34-1 (terminal No.7) and the weight sensor connector D-34-6 (terminal No.3)
- Occupant classification-ECU connector D-34-1 (terminal No.9) and the weight sensor connector D-34-5 (terminal No.3)
- Occupant classification-ECU connector D-34-1 (terminal No.1) and the weight sensor connector D-34-3, D-34-4, D-34-5 and D-34-6 (terminal No.2)
- Occupant classification-ECU connector D-34-1 (terminal No.12) and weight sensor connector D-34-3, D-34-4, D-34-5 and D-34-6 (terminal No.1)

Q: Does continuity exist?

YES : Go to Step 5.

NO : Repair the harness wires between occupant classification-ECU connector D-34-1 and weight sensor connector D-34-3, D-34-4, D-34-5 and D-34-6. Then go to Step 5.

STEP 5. Recheck for diagnostic trouble code.

Check again if the DTC is set.

(1) Erase the DTC.

(2) Turn the ignition switch to the "ON" position.

(3) Check if the DTC is set.

(4) Turn the ignition switch to the "LOCK" (OFF) position.

Q: Is DTCs B1B7A, B1B7F, B1B84, B1B89 set?

YES : Replace the passenger seat cushion frame assembly (Refer to GROUP 52A, Front Seat Assembly P.52A-17).

NO : There is an intermittent malfunction such as poor engaged connector(s) or open circuit (Refer to GROUP 00, How to Cope with Intermittent Malfunction P.00-15).

DTC B1B8C: Driver Seat Slide Sensor Circuit Performance

Seat Slide Sensor Circuit

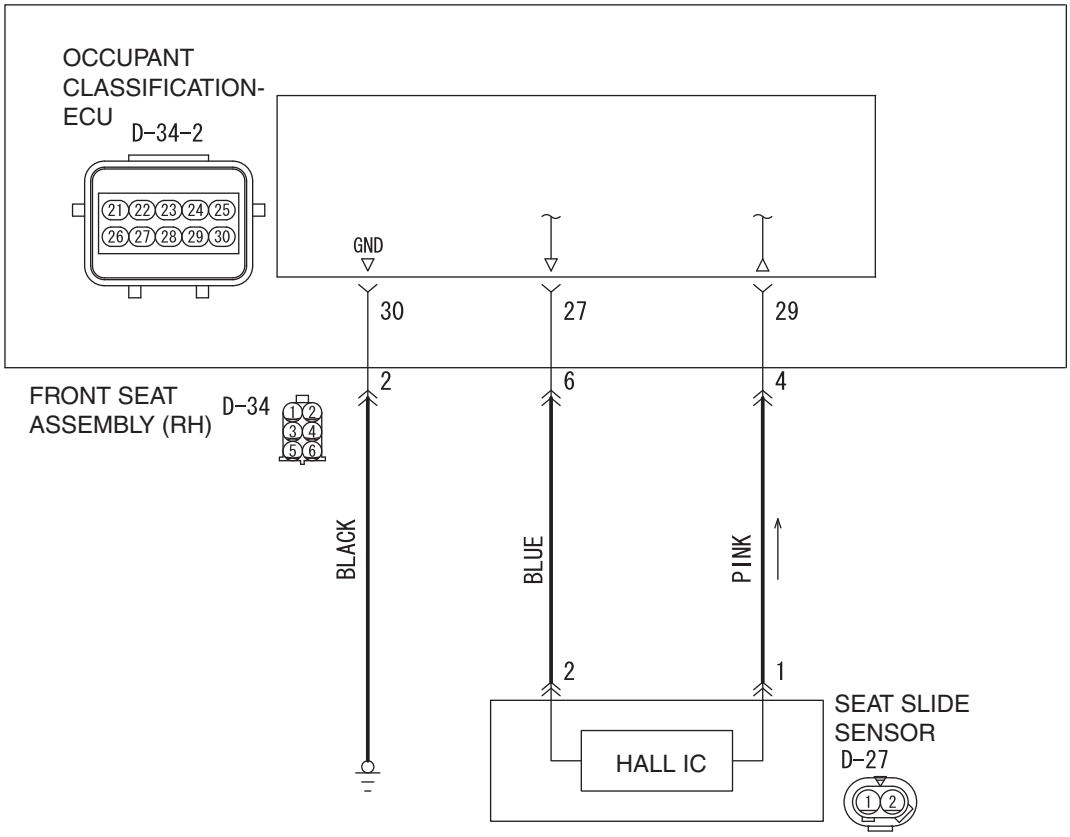

AC701825AB

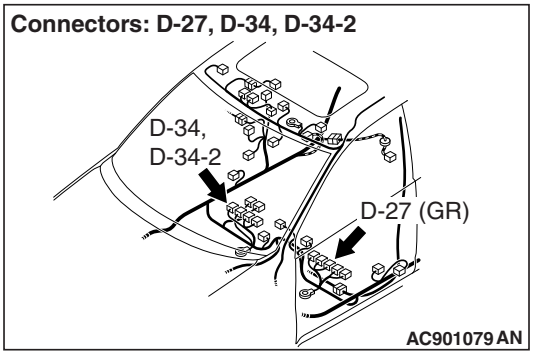

⚠ CAUTION

If DTC B1B8C is set in the occupant classification-ECU, always diagnose the CAN main bus lines.

CIRCUIT OPERATION

- The seat slide sensor sets the current value Hi or Low determined by the seat position.
- The occupant classification-ECU determines the seat position according to the current value from the seat slide sensor.

DTC SET CONDITION

The DTC is set when the seat slide sensor output current is not within the specified range.

TROUBLESHOOTING HINTS

- The seat slide sensor may be defective.
- The wiring harness or connectors may have loose, corroded, or damaged terminals, or terminals pushed back in the connector
- Malfunction of the occupant classification-ECU

DIAGNOSIS

Required Special Tools:

- MB991958 Scan Tool (M.U.T.-III Sub Assembly)
  - MB991824: Vehicle Communication Interface (V.C.I.)
  - MB991827 M.U.T.-III USB Cable
  - MB991910 M.U.T.-III Main Harness A (Vehicles with CAN communication system)

STEP 1. Using scan tool MB991958, diagnose the CAN bus line.

⚠ CAUTION

To prevent damage to scan tool MB991958, always turn the ignition switch to the "LOCK" (OFF) position before connecting or disconnecting scan tool MB991958.

(1) Connect scan tool MB991958. Refer to "How to connect the scan tool P.52B-28."
(2) Turn the ignition switch to the "ON" position.
(3) Diagnose the CAN bus line.
(4) Turn the ignition switch to the "LOCK" (OFF) position.

Q: Is the CAN bus line found to be normal?

YES : Go to Step 2.
NO : Repair the CAN bus line (Refer to GROUP 54C, Diagnosis P.54C-17).

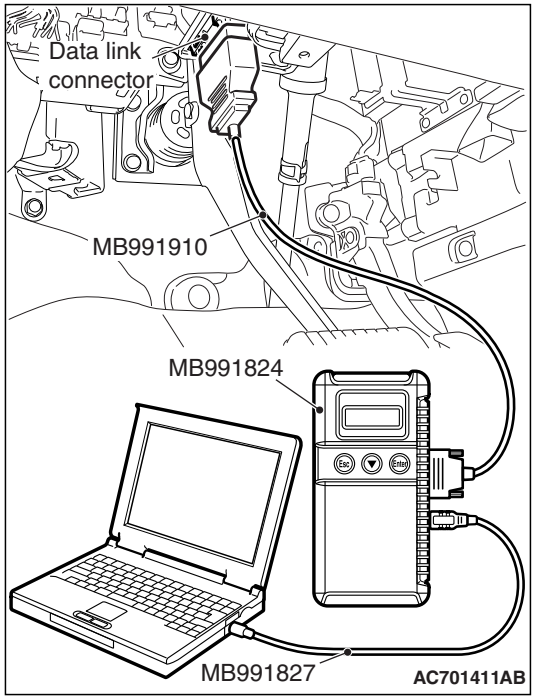

STEP 2. Recheck for diagnostic trouble code.

Check again if the DTC is set.
(1) Erase the DTC.
(2) Turn the ignition switch to the "ON" position.
(3) Check if the DTC is set.
(4) Turn the ignition switch to the "LOCK" (OFF) position.

Q: Is the DTC set?

YES : Go to Step 3.
NO : There is an intermittent malfunction such as poor engaged connector(s) or open circuit (Refer to GROUP 00, How to Cope with Intermittent Malfunction P.00-15).

STEP 3. Check the occupant classification-ECU connector D-34-2, front seat assembly connector D-34 and seat slide sensor connector D-27 for loose, corroded or damaged terminals, or terminals pushed back in the connector.

Q: Is the occupant classification-ECU connector D-34-2, front seat assembly connector D-34 and seat slide sensor connector D-27 in good condition?

YES : Go to Step 4.

NO : Replace the component(s) (Refer to GROUP 00E, Harness Connector Inspection P.00E-2).

STEP 4. Check the harness for open circuit between occupant classification-ECU connector D-34-2 (terminal No.27 and 29) and the seat slide sensor connector D-27 (terminal No.2 and 1).

(1) Disconnect occupant classification-ECU connector D-34-2 and seat slide sensor connector D-27.

⚠ CAUTION

Do not insert a test probe into the terminal from its front side directly, as the connector contact pressure may be weakened.

(2) Check for continuity between the following terminals. It should be less than 2 ohms.
- Occupant classification-ECU connector D-34-2 (terminal No.27) and the seat slide sensor connector D-27 (terminal No.2)
- Occupant classification-ECU connector D-34-2 (terminal No.29) and the seat slide sensor connector D-27 (terminal No.1)

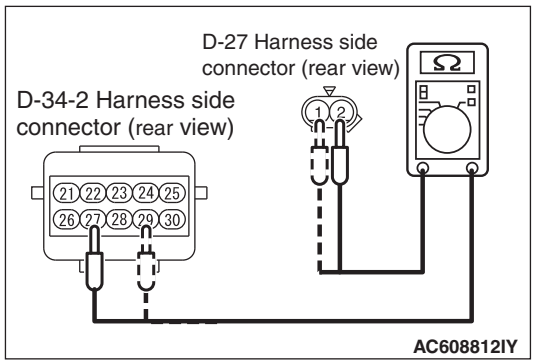

Q: Does continuity exist?

YES : Go to Step 5.

NO : Repair the harness wires between occupant classification-ECU connector D-34-2 and seat slide sensor connector D-27.

STEP 5. Check the seat slide sensor circuit. Measure the resistance at occupant classification-ECU connector D-34-2.

(1) Disconnect occupant classification connector-ECU connector D-34-2.
(2) Disconnect seat slide sensor connector D-27.

⚠ CAUTION

Do not insert a test probe into the terminal from its front side directly, as the connector contact pressure may be weakened.

(3) Check for continuity between D-34-2 harness side connector terminals 27 and 29.
It should be open circuit.

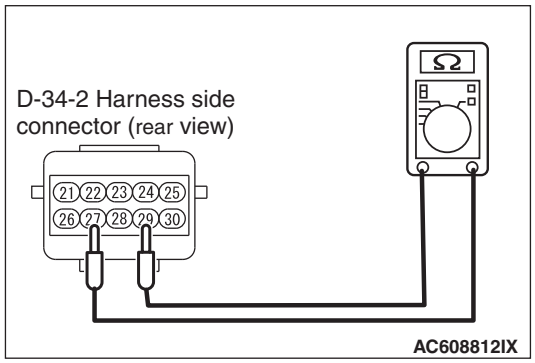

Q: Is it open circuit?

YES : Go to Step 6.
NO : Repair the harness wires between occupant classification-ECU connector D-34-2 and seat slide sensor connector D-27.

STEP 6. Check the harness for open circuit between occupant classification-ECU connector D-34-2.

(1) Disconnect occupant classification-ECU connector D-34-2 and seat slide sensor connector D-27.

⚠ CAUTION

Do not insert a test probe into the terminal from its front side directly, as the connector contact pressure may be weakened.

(2) Check for continuity between D-34-2 Occupant classification-ECU connector terminals No.27, 29 and body ground.
It should be open circuit.

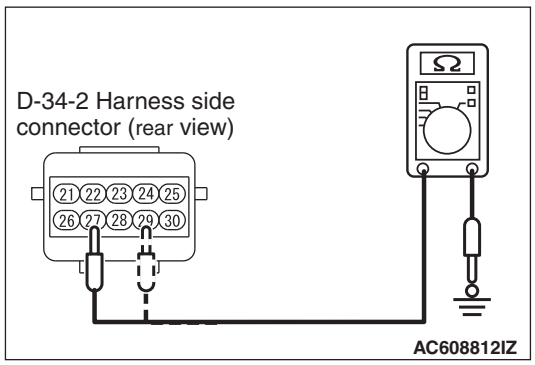

Q: Is it open circuit?

YES : Go to Step 7
NO : Repair the harness wires between occupant classification-ECU connector D-34-2 and seat slide sensor connector D-27.

STEP 7. Recheck for diagnostic trouble code.

Check again if the DTC is set to the occupant classification-ECU.

(1) Erase the DTC.
(2) Turn the ignition switch from "LOCK" (OFF) position to "ON" position.
(3) Check if DTC is set.
(4) Turn the ignition switch to the "LOCK" (OFF) position.

Q: Is the DTC set?

YES : Replace the driver seat cushion frame assembly (Refer to GROUP 52A, Front Seat Assembly P.52A-17). Then go to Step 8.

NO : There is an intermittent malfunction such as poor engaged connector(s) or open circuit (Refer to GROUP 00, How to Cope with Intermittent Malfunction P.00-15).

STEP 8. Recheck for diagnostic trouble code.

Check again if the DTC is set to the occupant classification-ECU.

(1) Erase the DTC.
(2) Turn the ignition switch from "LOCK" (OFF) position to "ON" position.
(3) Check if DTC is set.
(4) Turn the ignition switch to the "LOCK" (OFF) position.

Q: Is the DTC set?

YES : Replace the passenger seat cushion frame assembly (Refer to GROUP 52A, Front Seat Assembly P.52A-17).

NO : There is an intermittent malfunction such as poor engaged connector(s) or open circuit (Refer to GROUP 00, How to Cope with Intermittent Malfunction P.00-15).

DTC B1B8D: Driver Seat Slide Sensor Open Circuit

Seat Slide Sensor Circuit

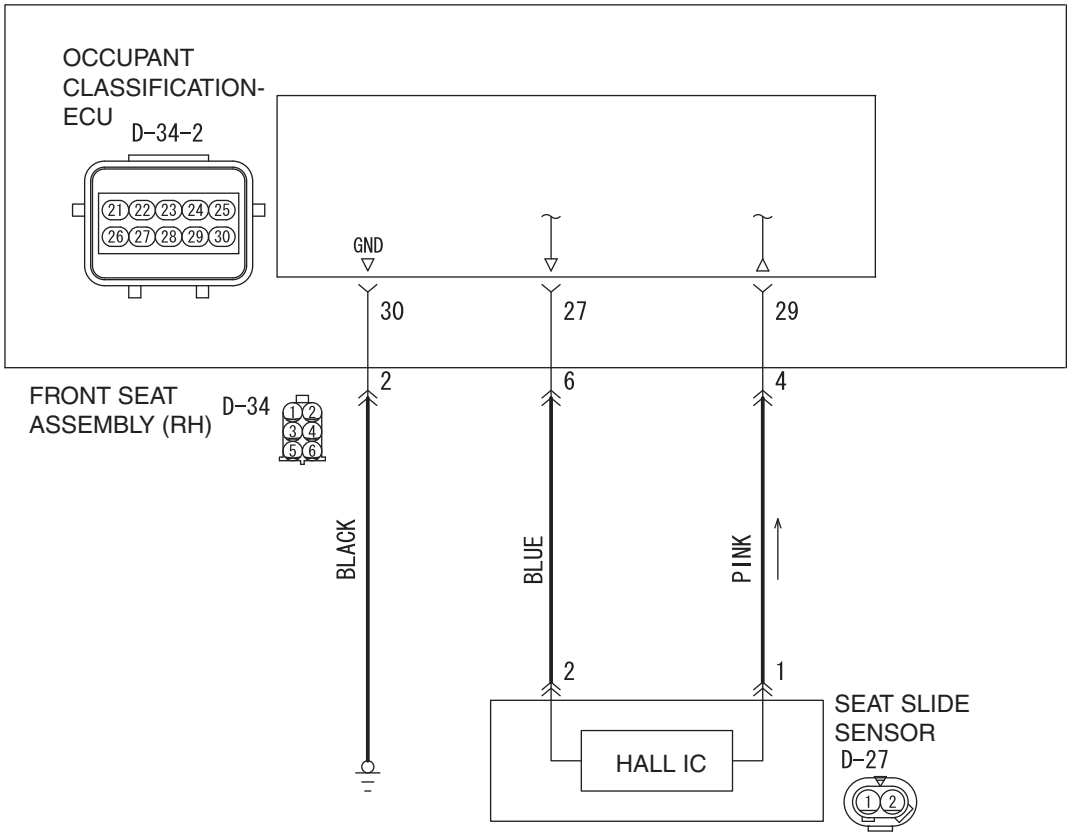

AC701825AB

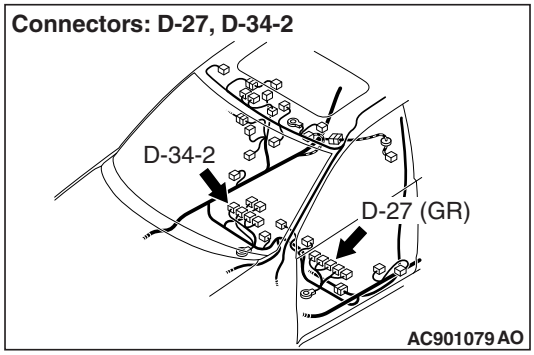

⚠ CAUTION

If DTC B1B8D is set in the occupant classification-ECU, always diagnose the CAN main bus lines.

CIRCUIT OPERATION

- The seat slide sensor sets the current value Hi or Low determined by the seat position.
- The occupant classification-ECU determines the seat position according to the current value from the seat slide sensor.

DTC SET CONDITIONS

- This DTC is set if there is abnormal resistance between the input terminals of the seat slide sensor. The most likely causes for this code to be set are the followings:
  - Open circuit in the seat slide sensor or harness

TROUBLESHOOTING HINTS

- Open circuit in the seat slide sensor circuit
- Disengaged seat slide sensor connector
- Improper connector contact
- Malfunction of the seat slide sensor
- Malfunction of the occupant classification-ECU

DIAGNOSIS

Required Special Tools:

- MB991958: Scan Tool (M.U.T.-III Sub Assembly)
  - MB991824: Vehicle Communication Interface (V.C.I.)
  - MB991827: M.U.T.-III USB Cable
  - MB991910: M.U.T.-III Main Harness A (Vehicles with CAN communication system)

STEP 1. Using scan tool MB991958, diagnose the CAN bus line.

⚠ CAUTION

To prevent damage to scan tool MB991958, always turn the ignition switch to the "LOCK" (OFF) position before connecting or disconnecting scan tool MB991958.

(1) Connect scan tool MB991958. Refer to "How to connect the scan tool P.52B-28."
(2) Turn the ignition switch to the "ON" position.
(3) Diagnose the CAN bus line.
(4) Turn the ignition switch to the "LOCK" (OFF) position.

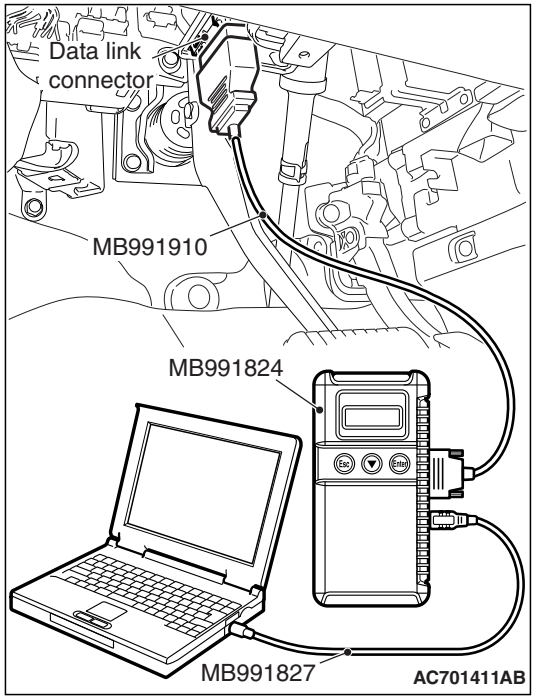

Q: Is the CAN bus line found to be normal?

YES : Go to Step 2.
NO : Repair the CAN bus line (Refer to GROUP 54C, Diagnosis P.54C-17).

STEP 2. Recheck for diagnostic trouble code.

Check again if the DTC is set.
(1) Erase the DTC.
(2) Turn the ignition switch to the "ON" position.
(3) Check if the DTC is set.
(4) Turn the ignition switch to the "LOCK" (OFF) position.

Q: Is the DTC set?

YES : Go to Step 3.
NO : There is an intermittent malfunction such as poor engaged connector(s) or open circuit (Refer to GROUP 00, How to Cope with Intermittent Malfunction P.00-15).

STEP 3. Check the harness for open circuit between occupant classification-ECU connector D-34-2 (terminal No.27 and 29) and the seat slide sensor connector D-27 (terminal No.2 and 1).

(1) Disconnect occupant classification-ECU connector D-34-2 and seat slide sensor connector D-27.

⚠ CAUTION

Do not insert a test probe into the terminal from its front side directly, as the connector contact pressure may be weakened.

(2) Check for continuity between the following terminals. It should be less than 2 ohms.
- Occupant classification-ECU connector D-34-2 (terminal No.27) and the seat slide sensor connector D-27 (terminal No.2)
- Occupant classification-ECU connector D-34-2 (terminal No.29) and the seat slide sensor connector D-27 (terminal No.1)

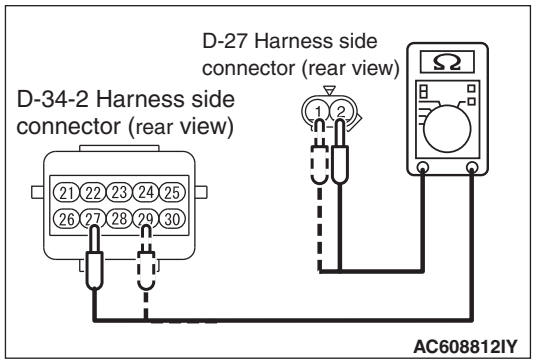

Q: Does continuity exist?

YES : Go to Step 4.

NO : Repair the harness wires between occupant classification-ECU connector D-34-2 and seat slide sensor connector D-27.

STEP 4. Recheck for diagnostic trouble code.

Check again if the DTC is set to the occupant classification-ECU.

(1) Erase the DTC.
(2) Turn the ignition switch from "LOCK" (OFF) position to "ON" position.
(3) Check if DTC is set.
(4) Turn the ignition switch to the "LOCK" (OFF) position.

Q: Is the DTC B1B8D set?

YES : Replace the driver seat cushion frame assembly (Refer to GROUP 52A, Front seat assembly P.52A-17). Then go to Step 5.

NO : There is an intermittent malfunction such as poor engaged connector(s) or open circuit (Refer to GROUP 00, How to Cope with Intermittent Malfunction P.00-15).

STEP 5. Recheck for diagnostic trouble code.

Check again if the DTC is set to the occupant classification-ECU.

(1) Erase the DTC.
(2) Turn the ignition switch from "LOCK" (OFF) position to "ON" position.
(3) Check if DTC is set.
(4) Turn the ignition switch to the "LOCK" (OFF) position.

Q: Is the DTC set?

YES : Replace the passenger seat cushion frame assembly (Refer to GROUP 52A, Front seat assembly P.52A-17).

NO : There is an intermittent malfunction such as poor engaged connector(s) or open circuit (Refer to GROUP 00, How to Cope with Intermittent Malfunction P.00-15).

DTC B1B8E: Driver Seat Slide Sensor Short (Power Supply Side) Circuit

Seat Slide Sensor Circuit

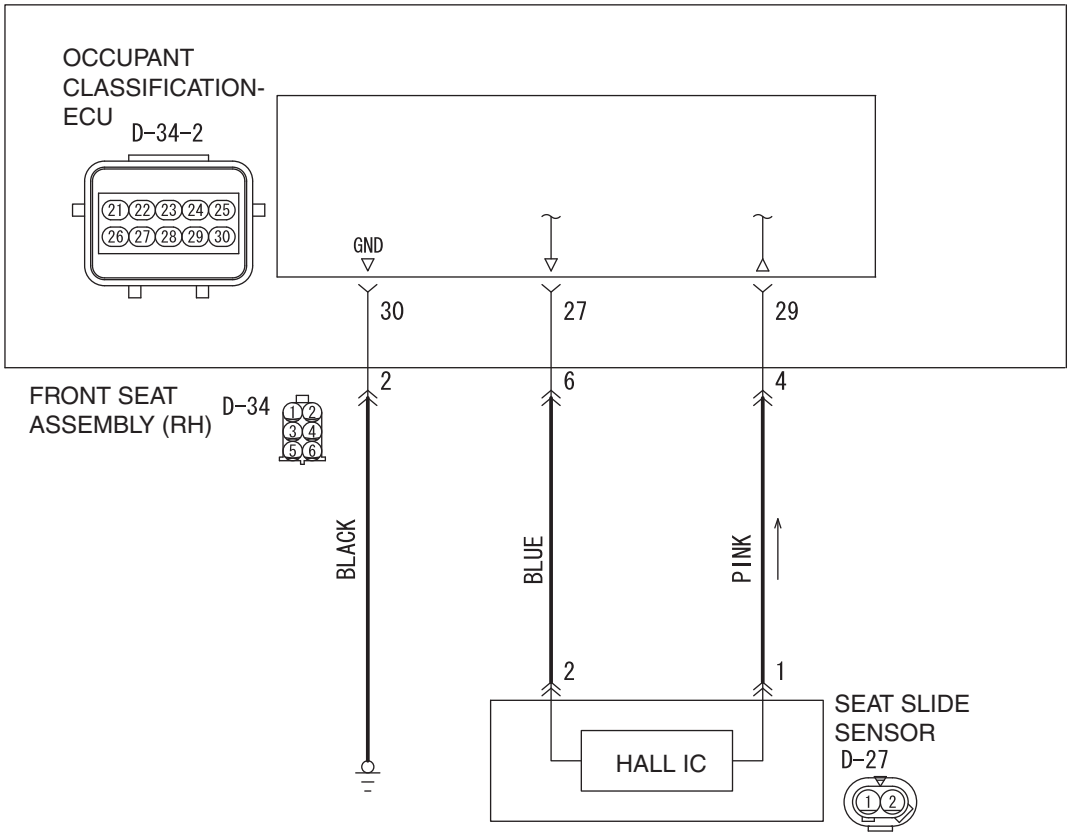

AC701825AB

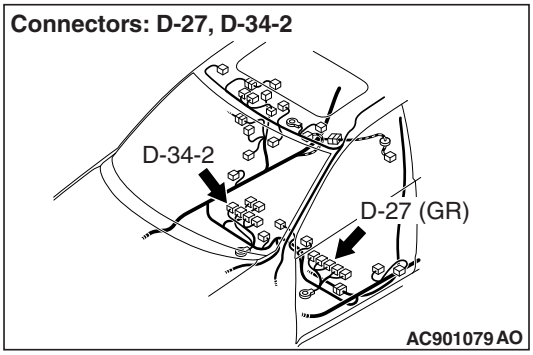

⚠ CAUTION

If DTC B1B8E is set in the occupant classification-ECU, always diagnose the CAN main bus lines.

CIRCUIT OPERATION

- The seat slide sensor sets the current value Hi or Low determined by the seat position.
- The occupant classification determines the seat position according to the current value from the seat slide sensor.

DTC SET CONDITIONS

This DTC is set if there is short-circuited to the power supply between the input terminals of the seat slide sensor.

TROUBLESHOOTING HINTS

- Damaged wiring harnesses or connectors
- Short to the power supply in the seat slide sensor harness
- Malfunction of the seat slide sensor
- Malfunction of the occupant classification-ECU

DIAGNOSIS

Required Special Tools:

- MB991958: Scan Tool (M.U.T.-III Sub Assembly)
  - MB991824: Vehicle Communication Interface (V.C.I.)
  - MB991827: M.U.T.-III USB Cable
  - MB991910: M.U.T.-III Main Harness A (Vehicles with CAN communication system)

STEP 1. Using scan tool MB991958, diagnose the CAN bus line.

⚠ CAUTION

To prevent damage to scan tool MB991958, always turn the ignition switch to the "LOCK" (OFF) position before connecting or disconnecting scan tool MB991958.

(1) Connect scan tool MB991958. Refer to "How to connect the scan tool P.52B-28."
(2) Turn the ignition switch to the "ON" position.
(3) Diagnose the CAN bus line.
(4) Turn the ignition switch to the "LOCK" (OFF) position.

Q: Is the CAN bus line found to be normal?

YES : Go to Step 2.
NO : Repair the CAN bus line (Refer to GROUP 54C, Diagnosis P.54C-17).

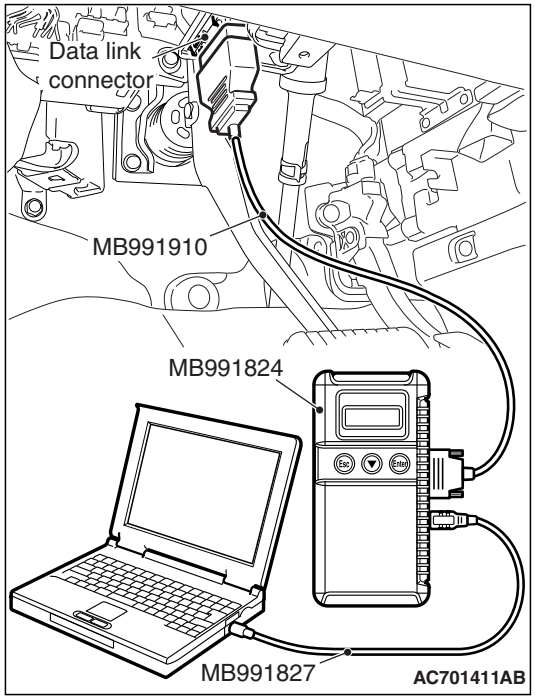

STEP 2. Recheck for diagnostic trouble code.

Check again if the DTC is set.
(1) Erase the DTC.
(2) Turn the ignition switch to the "ON" position.
(3) Check if the DTC is set.
(4) Turn the ignition switch to the "LOCK" (OFF) position.

Q: Is the DTC set?

YES : Go to Step 3.
NO : There is an intermittent malfunction such as poor engaged connector(s) or open circuit (Refer to GROUP 00, How to Cope with Intermittent Malfunction P.00-15).

STEP 3. Check the seat slide sensor circuit. Measure the voltage at the occupant classification-ECU connector D-34-2.

(1) Disconnect occupant classification connector-ECU connector D-34-2.
(2) Disconnect seat slide sensor connector D-27.
(3) Turn the ignition switch to the "ON" position.

⚠ CAUTION

Do not insert a test probe into the terminal from its front side directly, as the connector contact pressure may be weakened.

(4) Measure the voltage between D-34-2 harness side connector terminals 27, 29 and body ground.
Voltage should measure 1 volt or less.

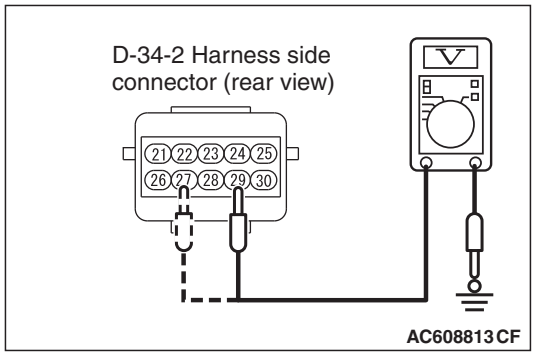

Q: Is the measured voltage within the specified range?

YES : Go to Step 5.
NO : Go to Step 4.

STEP 4. Check the harness wires for short circuit to power supply between the occupant classification-ECU connector D-34-2 (terminal No.27 and 29) and seat slide sensor connector D-27 (terminal No.2 and 1).

Q: Are the harness wires between occupant classification-ECU connector D-34-2 (terminal No.27 and 29) and seat slide sensor connector D-27 (terminal No.2 and 1) in good condition?

YES : Go to Step 5.
NO : Repair the harness wires between the occupant classification-ECU connector D-34-2 and seat slide sensor connector D-27. Then go to Step 5.

STEP 5. Recheck for diagnostic trouble code.

Check again if the DTC is set to the occupant classification-ECU.

(1) Erase the DTC.
(2) Turn the ignition switch from "LOCK" (OFF) position to "ON" position.
(3) Check if DTC is set.
(4) Turn the ignition switch to the "LOCK" (OFF) position.

Q: Is the DTC B1B8E set?

YES : Replace the driver seat cushion frame assembly (Refer to GROUP 52A, Front Seat Assembly P.52A-17). Then go to Step 6.
NO : The procedure is complete.

STEP 6. Recheck for diagnostic trouble code.

Check again if the DTC is set to the occupant classification-ECU.

(1) Erase the DTC.
(2) Turn the ignition switch from "LOCK" (OFF) position to "ON" position.
(3) Check if DTC is set.
(4) Turn the ignition switch to the "LOCK" (OFF) position.

Q: Is the DTC set?

YES : Replace the passenger seat cushion frame assembly (Refer to GROUP 52A, Front Seat Assembly P.52A-17).

NO : There is an intermittent malfunction such as poor engaged connector(s) or open circuit (Refer to GROUP 00, How to Cope with Intermittent Malfunction P.00-15).

DTC B1B91: Driver Seat Slide Sensor Configuration Mismatch

⚠ CAUTION

If DTC B1B91 is set in the occupant classification-ECU, always diagnose the CAN main bus lines.

DTC SET CONDITIONS

These DTCs are set if there is an error in the coding data of the occupant classification-ECU.

TROUBLESHOOTING HINTS

Malfunction of occupant classification-ECU

DIAGNOSIS

Required Special Tools:

- MB991958 Scan Tool (M.U.T.-III Sub Assembly)
  - MB991824: Vehicle Communication Interface (V.C.I.)
  - MB991827 M.U.T.-III USB Cable
  - MB991910 M.U.T.-III Main Harness A (Vehicles with CAN communication system)

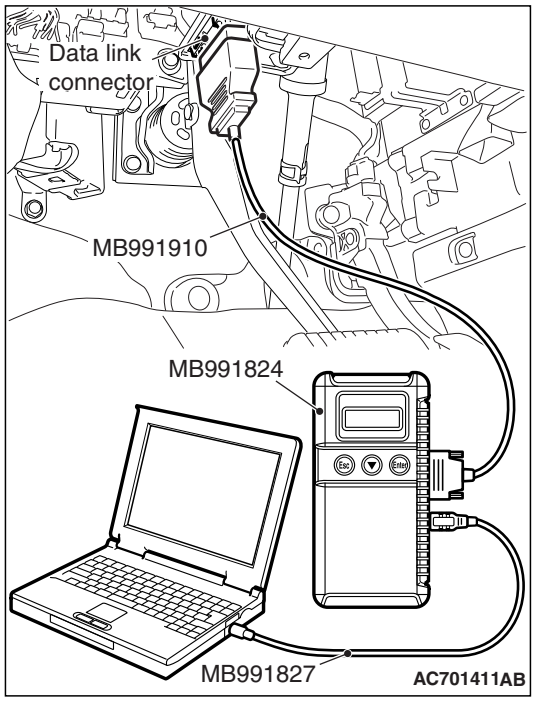

STEP 1. Using scan tool MB991958, diagnose the CAN bus line.

⚠ CAUTION

To prevent damage to scan tool MB991958, always turn the ignition switch to the "LOCK" (OFF) position before connecting or disconnecting scan tool MB991958.

(1) Connect scan tool MB991958. Refer to "How to connect the scan tool P.52B-28."
(2) Turn the ignition switch to the "ON" position.
(3) Diagnose the CAN bus line.
(4) Turn the ignition switch to the "LOCK" (OFF) position.

Q: Is the CAN bus line found to be normal?

YES : Go to Step 2.
NO : Repair the CAN bus line (Refer to GROUP 54C, Diagnosis P.54C-17).

STEP 2. Recheck for diagnostic trouble code.

Check again if the DTC is set.
(1) Erase the DTC.
(2) Turn the ignition switch to the "ON" position.
(3) Check if the DTC is set.
(4) Turn the ignition switch to the "LOCK" (OFF) position.

Q: Is the DTC set?

YES : Replace the driver seat cushion frame assembly (Refer to GROUP 52A, Front Seat Assembly P.52A-17).
NO : There is an intermittent malfunction such as poor engaged connector(s) or open circuit (Refer to GROUP 00, How to Cope with Intermittent Malfunction P.00-15).

DTC B1BA7: Occupant Classification System Verification Required

⚠ CAUTION

If DTC B1BA7 is set in the occupant classification-ECU, always diagnose the CAN main bus lines.

CIRCUIT OPERATION

The load data from the weight sensor is classified with the occupant classification-ECU, and its classified information is send to SRS-ECU by CAN bus line. The SRS-ECU determines the air bag deployment based on this classified information, and controls the power supply circuit to the inflator.

DTC SET CONDITIONS

This DTC is set if a light impact is detected by the occupant classification-ECU.

TROUBLESHOOTING HINTS

- Malfunction of weight sensor
- Malfunction of the occupant classification-ECU

DIAGNOSIS

Required Special Tools:

- MB991958 Scan Tool (M.U.T.-III Sub Assembly)
  - MB991824: Vehicle Communication Interface (V.C.I.)
  - MB991827 M.U.T.-III USB Cable
  - MB991910 M.U.T.-III Main Harness A (Vehicles with CAN communication system)

STEP 1. Using scan tool MB991958, diagnose the CAN bus line.

⚠ CAUTION

To prevent damage to scan tool MB991958, always turn the ignition switch to the "LOCK" (OFF) position before connecting or disconnecting scan tool MB991958.

(1) Connect scan tool MB991958. Refer to "How to connect the scan tool P.52B-28."
(2) Turn the ignition switch to the "ON" position.
(3) Diagnose the CAN bus line.
(4) Turn the ignition switch to the "LOCK" (OFF) position.

Q: Is the CAN bus line found to be normal?

YES : Go to Step 2.
NO : Repair the CAN bus line (Refer to GROUP 54C, Diagnosis P.54C-17).

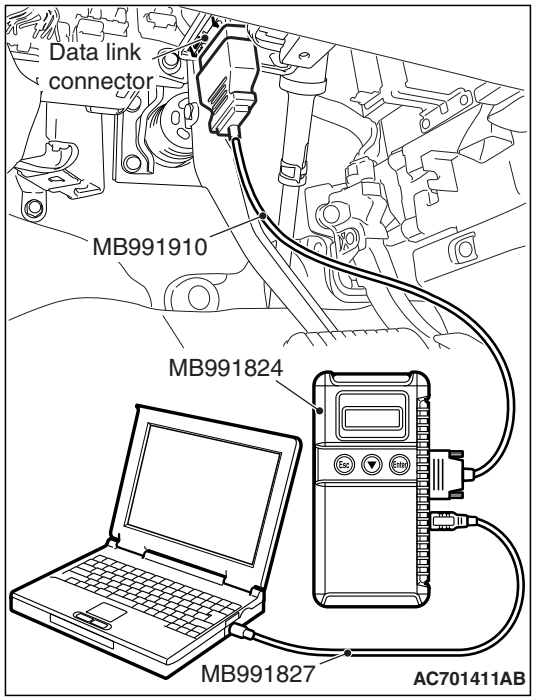

STEP 2. Weight sensor check.
Refer to P.52B-428

Q: Is the check result normal?

YES : Go to step 3.

NO : Replace the passenger seat cushion frame assembly (Refer to GROUP 52A, Front Seat Assembly P.52A-19).

STEP 3. Recheck for diagnostic trouble code.
Check again if the DTC is set.
(1) Erase the DTC.
(2) Turn the ignition switch to the "ON" position.
(3) Check if the DTC is set.
(4) Turn the ignition switch to the "LOCK" (OFF) position.

Q: Is the DTC B1BA7 set?

YES : Replace the passenger seat cushion frame assembly (Refer to GROUP 52A, Front Seat Assembly P.52A-17).

NO : There is an intermittent malfunction such as poor engaged connector(s) or open circuit (Refer to GROUP 00, How to Cope with Intermittent Malfunction P.00-15).

DTC B1BA8: Occupant classification-ECU Out of Calibration/not Calibrated

⚠ CAUTION
If DTC B1BA8 is set in the occupant classification-ECU, always diagnose the CAN main bus lines.

CIRCUIT OPERATION

The load data from the weight sensor is classified with the occupant classification-ECU, and its classified information is send to SRS-ECU by CAN bus line. The SRS-ECU determines the air bag deployment based on this classified information, and controls the power supply circuit to the inflator.

DTC SET CONDITION

This DTC is set when the 30 Kg (66 pounds) system and 0 Kg (0 pound) system have not been executed.

TROUBLESHOOTING HINTS

- Zero calibration not executed
- 30 Kg (66 pounds) system and 0 Kg (0 pound) system not executed
- Malfunction of the occupant classification-ECU

DIAGNOSIS

Required Special Tools:
- MB991958 Scan Tool (M.U.T.-III Sub Assembly)
  - MB991824: Vehicle Communication Interface (V.C.I.)
  - MB991827 M.U.T.-III USB Cable
  - MB991910 M.U.T.-III Main Harness A (Vehicles with CAN communication system)

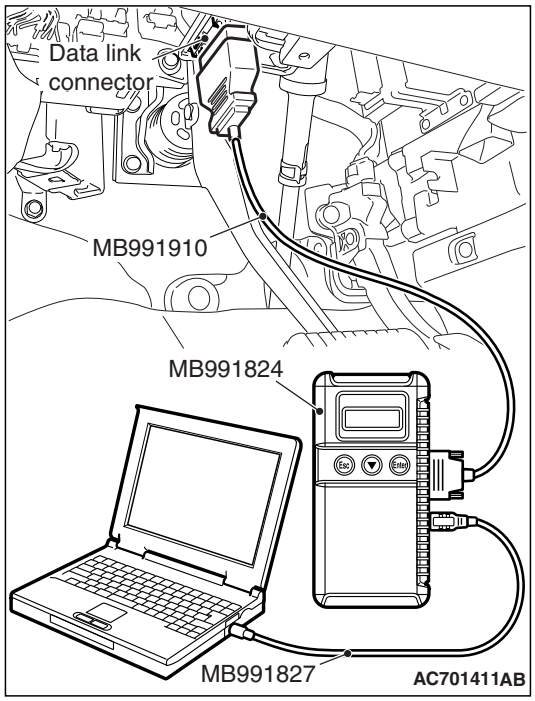

STEP 1. Using scan tool MB991958, diagnose the CAN bus line.

⚠ CAUTION

To prevent damage to scan tool MB991958, always turn the ignition switch to the "LOCK" (OFF) position before connecting or disconnecting scan tool MB991958.

(1) Connect scan tool MB991958. Refer to "How to connect the scan tool P.52B-28."
(2) Turn the ignition switch to the "ON" position.
(3) Diagnose the CAN bus line.
(4) Turn the ignition switch to the "LOCK" (OFF) position.

Q: Is the CAN bus line found to be normal?

YES : Go to Step 2.
NO : Repair the CAN bus line (Refer to GROUP 54C, Diagnosis P.54C-17).

STEP 2. Recheck for diagnostic trouble code.

Check again if the DTC is set.
(1) Erase the DTC.
(2) Turn the ignition switch to the "ON" position.
(3) Check if the DTC is set.
(4) Turn the ignition switch to the "LOCK" (OFF) position.

Q: Is the DTC B1BA7 set?

YES : After executing zero calibration of the occupant classification-ECU, execute 30 Kg (66 pounds) system and 0 Kg (0 pound) system. Then go to Step 3.
NO : There is an intermittent malfunction such as poor engaged connector(s) or open circuit (Refer to GROUP 00, How to Cope with Intermittent Malfunction P.00-15).

STEP 3. Recheck for diagnostic trouble code.

Check again if the DTC is set to the occupant classification-ECU.

(1) Erase the DTC.
(2) Turn the ignition switch from "LOCK" (OFF) position to "ON" position.
(3) Check if DTC is set.
(4) Turn the ignition switch to the "LOCK" (OFF) position.

Q: Is the DTC set?

YES : Replace the passenger seat cushion frame assembly (Refer to GROUP 52A, Front Seat Assembly P.52A-17).

NO : There is an intermittent malfunction such as poor engaged connector(s) or open circuit (Refer to GROUP 00, How to Cope with Intermittent Malfunction P.00-15).

DTC B1BBA: Passenger Seat Weight Sensor Power Supply Circuit

⚠ CAUTION

If DTC B1BBA is set in the occupant classification-ECU, always diagnose the CAN main bus lines.

CIRCUIT OPERATION

The load data from the weight sensor is classified with the occupant classification-ECU, and its classified information is send to SRS-ECU by CAN bus line. The SRS-ECU determines the air bag deployment based on this classified information, and controls the power supply circuit to the inflator.

DTC SET CONDITIONS

This DTC is set if the weight sensor power supply line is defective.

TROUBLESHOOTING HINTS

- The weight sensor may be defective.
- The occupant classification-ECU may be defective.
- The wiring harness or connectors may have loose, corroded, or damaged terminals, or terminals pushed back in the connector

DIAGNOSIS

Required Special Tools:

- MB991958 Scan Tool (M.U.T.-III Sub Assembly)
  - MB991824: Vehicle Communication Interface (V.C.I.)
  - MB991827 M.U.T.-III USB Cable
  - MB991910 M.U.T.-III Main Harness A (Vehicles with CAN communication system)

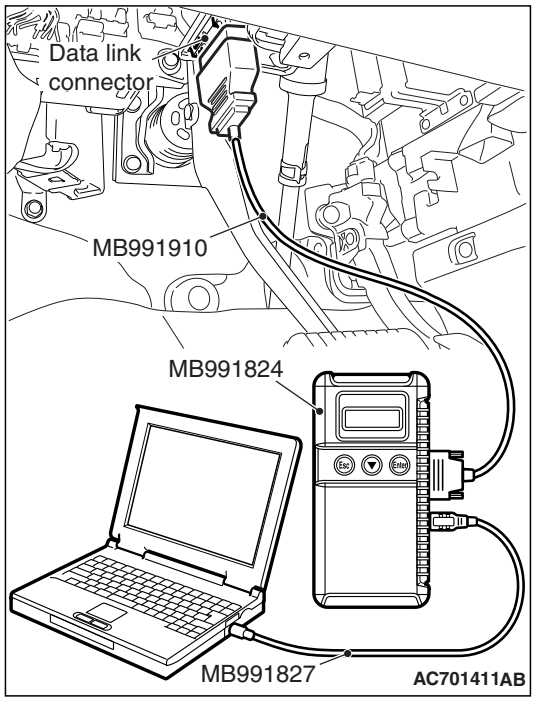

STEP 1. Using scan tool MB991958, diagnose the CAN bus line.

⚠ CAUTION

To prevent damage to scan tool MB991958, always turn the ignition switch to the "LOCK" (OFF) position before connecting or disconnecting scan tool MB991958.

(1) Connect scan tool MB991958. Refer to "How to connect the scan tool P.52B-28."
(2) Turn the ignition switch to the "ON" position.
(3) Diagnose the CAN bus line.
(4) Turn the ignition switch to the "LOCK" (OFF) position.

Q: Is the CAN bus line found to be normal?

YES : Go to Step 2.
NO : Repair the CAN bus line (Refer to GROUP 54C, Diagnosis P.54C-17).

STEP 2. Recheck for diagnostic trouble code.

Check again if the DTC is set.
(1) Erase the DTC.
(2) Turn the ignition switch to the "ON" position.
(3) Check if the DTC is set.
(4) Turn the ignition switch to the "LOCK" (OFF) position.

Q: Is the DTC set?

YES : Go to Step 3.
NO : There is an intermittent malfunction such as poor engaged connector(s) or open circuit (Refer to GROUP 00, How to Cope with Intermittent Malfunction P.00-15).

STEP 3. Using scan tool MB991958,read the occupant classification-ECU diagnostic trouble code.

Check if the DTC B210D or B210E is set the occupant classification-ECU.

Q: Is the DTC B1B78, B1B7D, B1B82 or B1B87 set?

YES : Diagnose the occupant classification-ECU (Refer to P.52B-346).
NO : Replace the passenger seat cushion frame assembly (Refer to GROUP 52A, Front Seat Assembly P.52A-17).

DTC B1BBC: Occupant Classification System Negative System Weight

⚠ CAUTION
If DTC B1BBC is set in the occupant classification-ECU, always diagnose the CAN main bus lines.

CIRCUIT OPERATION

The load data from the weight sensor is classified with the occupant classification-ECU, and its classified information is send to SRS-ECU by CAN bus line. The SRS-ECU determines the air bag deployment based on this classified information, and controls the power supply circuit to the inflator.

DTC SET CONDITION

This DTC is set if the passenger seat weight is -15 Kg (-35 pound) or less.

TROUBLESHOOTING HINTS

An object is caught in between the passenger seat and floor.

DIAGNOSIS

Required Special Tools:

- MB991958 Scan Tool (M.U.T.-III Sub Assembly)
  - MB991824: Vehicle Communication Interface (V.C.I.)
  - MB991827 M.U.T.-III USB Cable
  - MB991910 M.U.T.-III Main Harness A (Vehicles with CAN communication system)

STEP 1. Check for an object caught in between the passenger seat and floor.

Q: Is the check result normal?

YES : Go to Step 2.
NO : It corrects.

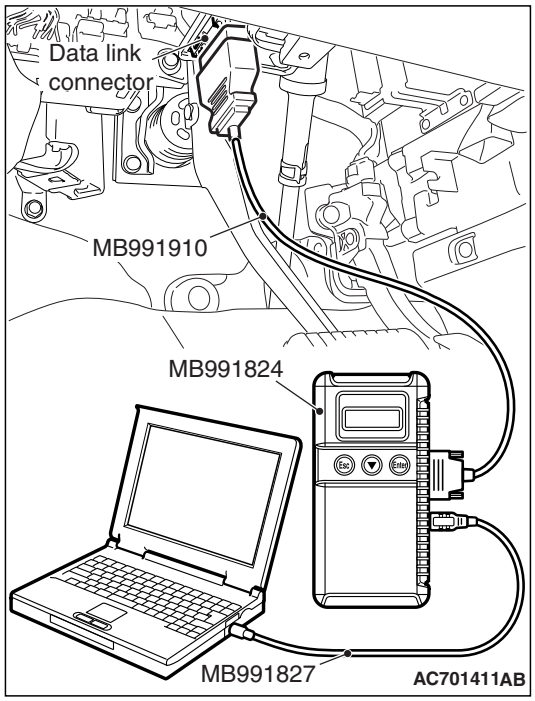

STEP 2. Using scan tool MB991958, diagnose the CAN bus line.

⚠ CAUTION

To prevent damage to scan tool MB991958, always turn the ignition switch to the "LOCK" (OFF) position before connecting or disconnecting scan tool MB991958.

(1) Connect scan tool MB991958. Refer to "How to connect the scan tool P.52B-28."
(2) Turn the ignition switch to the "ON" position.
(3) Diagnose the CAN bus line.
(4) Turn the ignition switch to the "LOCK" (OFF) position.

Q: Is the CAN bus line found to be normal?

YES : Go to Step 3.
NO : Repair the CAN bus line (Refer to GROUP 54C, Diagnosis P.54C-17).

STEP 3. Recheck for diagnostic trouble code.

Check again if the DTC is set.
(1) Erase the DTC.
(2) Turn the ignition switch to the "ON" position.
(3) Check if the DTC is set.
(4) Turn the ignition switch to the "LOCK" (OFF) position.

Q: Is the DTC B1BBC set?

YES : Replace the passenger seat cushion frame assembly (Refer to GROUP 52A, Front Seat Assembly P.52A-19).
NO : There is an intermittent malfunction such as poor engaged connector(s) or open circuit (Refer to GROUP 00, How to Cope with Intermittent Malfunction P.00-15).

DTC B1BBD: Occupant Classification-ECU Current Configuration table Unprogrammed

⚠ CAUTION

If DTC B1BBD is set in the occupant classification-ECU, always diagnose the CAN main bus lines.

DTC SET CONDITIONS

The DTC is set if the check error occurs in the coding data of the occupant classification-ECU.

TROUBLESHOOTING HINTS

- Zero calibration not executed
- The occupant Classification-ECU may be defective.

DIAGNOSIS

Required Special Tools:

- MB991958 Scan Tool (M.U.T.-III Sub Assembly)
  - MB991824: Vehicle Communication Interface (V.C.I.)
  - MB991827 M.U.T.-III USB Cable
  - MB991910 M.U.T.-III Main Harness A (Vehicles with CAN communication system)

STEP 1. Using scan tool MB991958, diagnose the CAN bus line.

⚠ CAUTION

To prevent damage to scan tool MB991958, always turn the ignition switch to the "LOCK" (OFF) position before connecting or disconnecting scan tool MB991958.

(1) Connect scan tool MB991958. Refer to "How to connect the scan tool P.52B-28."
(2) Turn the ignition switch to the "ON" position.
(3) Diagnose the CAN bus line.
(4) Turn the ignition switch to the "LOCK" (OFF) position.

Q: Is the CAN bus line found to be normal?

YES : Go to Step 2.
NO : Repair the CAN bus line (Refer to GROUP 54C, Diagnosis P.54C-17).

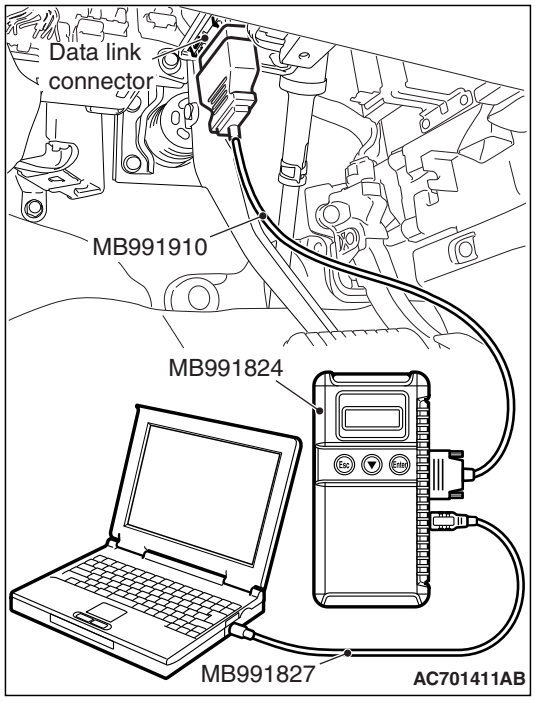

STEP 2. Recheck for diagnostic trouble code.

Check again if the DTC is set the occupant classification-ECU.
(1) Zero calibration of occupant classification -ECU
(2) Erase the DTC.
(3) Turn the ignition switch to the "ON" position.
(4) Check if the DTC is set.
(5) Turn the ignition switch to the "LOCK" (OFF) position.

Q: Is the DTC set?

YES : Replace the passenger seat cushion frame assembly (Refer to GROUP 52A, Front Seat Assembly P.52A-17).

NO : There is an intermittent malfunction such as poor engaged connector(s) or open circuit (Refer to GROUP 00, How to Cope with Intermittent Malfunction P.00-15).

DTC B1C23: Passenger Seat Weight Sensor (front: LH) Configuration Mismatch
DTC B1C24: Passenger Seat Weight Sensor (front: RH) Configuration Mismatch
DTC B1C25: Passenger Seat Weight Sensor (rear: LH) Configuration Mismatch
DTC B1C26: Passenger Seat Weight Sensor (rear: RH) Configuration Mismatch

⚠ CAUTION

If DTC B1C23, B1C24 B1C25, B1C26 is set in the occupant classification-ECU, always diagnose the CAN main bus lines.

DTC SET CONDITIONS

The DTC is set if the weight sensor serial No. of the coding data in the occupant classification-ECU does not match the serial No. sent from the weight sensor.

TROUBLESHOOTING HINTS

- Zero calibration not executed

DIAGNOSIS

Required Special Tools:

- MB991958 Scan Tool (M.U.T.-III Sub Assembly)
  - MB991824: Vehicle Communication Interface (V.C.I.)
  - MB991827 M.U.T.-III USB Cable
  - MB991910 M.U.T.-III Main Harness A (Vehicles with CAN communication system)

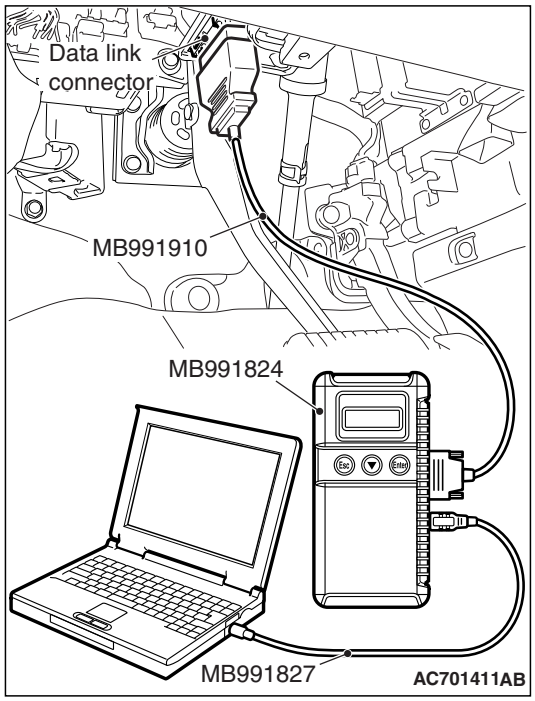

STEP 1. Using scan tool MB991958, diagnose the CAN bus line.

⚠ CAUTION

To prevent damage to scan tool MB991958, always turn the ignition switch to the "LOCK" (OFF) position before connecting or disconnecting scan tool MB991958.

(1) Connect scan tool MB991958. Refer to "How to connect the scan tool P.52B-28."
(2) Turn the ignition switch to the "ON" position.
(3) Diagnose the CAN bus line.
(4) Turn the ignition switch to the "LOCK" (OFF) position.

Q: Is the CAN bus line found to be normal?

YES : Go to Step 2.
NO : Repair the CAN bus line (Refer to GROUP 54C, Diagnosis P.54C-17).

STEP 2. Recheck for diagnostic trouble code.

Check again if the DTC is set.
(1) Erase the DTC.
(2) Turn the ignition switch to the "ON" position.
(3) Check if the DTC is set.
(4) Turn the ignition switch to the "LOCK" (OFF) position.

Q: Is the DTC set?

YES : Perform the zero calibration, and check the DTC again. If the DTC is set, replace the front seat cushion frame (RH).
NO : There is an intermittent malfunction such as poor engaged connector(s) or open circuit (Refer to GROUP 00, How to Cope with Intermittent Malfunction P.00-15).

DTC B1CB2: Occupant Classification-ECU Parameter Table Incompatible
DTC B2212: Occupant Classification-ECU Internal Failure
DTC B2250: Occupant Classification-ECU not Parameter Flash Required
DTC B2262: Occupant Classification-ECU Electrostatic Discharge Event Detected

⚠ CAUTION
If DTC B1CB2, B2212, B2250, B2262 is set in the occupant classification-ECU, always diagnose the CAN main bus lines.

TROUBLE JUDGMENT

The above DTC is set if an abnormality is detected in the circuit inside the occupant classification-ECU.

TROUBLESHOOTING HINTS

Malfunction of the occupant classification-ECU

DIAGNOSIS

Required Special Tools:
- MB991958: Scan Tool (M.U.T.-III Sub Assembly)
  - MB991824: Vehicles Communication Interface (V.C.I.)
  - MB991827: M.U.T.-III USB Cable
  - MB991910: M.U.T.-III Main Harness A (Vehicles with CAN communication system)

STEP 1. Using scan tool MB991958, diagnose the CAN bus line.

⚠ CAUTION
To prevent damage to scan tool MB991958, always turn the ignition switch to the "LOCK" (OFF) position before connecting or disconnecting scan tool MB991958.

(1) Connect scan tool MB991958. Refer to "How to connect the scan tool P.52B-28."
(2) Turn the ignition switch to the "ON" position.
(3) Diagnose the CAN bus line.
(4) Turn the ignition switch to the "LOCK" (OFF) position.

Q: Is the CAN bus line found to be normal?

YES : Go to Step 2.
NO : Repair the CAN bus line (Refer to GROUP 54C, Diagnosis P.54C-17).

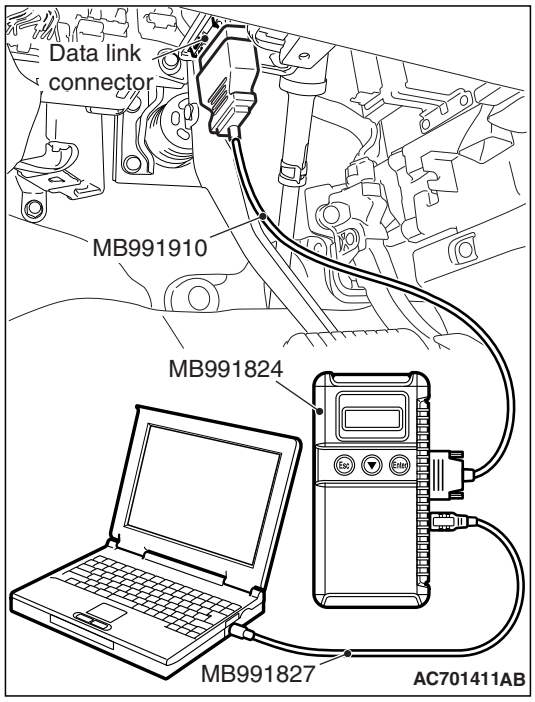

STEP 2. Recheck for diagnostic trouble code.

Check again if the DTC is set.

(1) Erase the DTC.
(2) Turn the ignition switch from "LOCK" (OFF) position to "ON" position.
(3) Check if DTC is set.
(4) Turn the ignition switch to the "LOCK" (OFF) position.

Q: Is the DTC set?

YES : Replace the passenger seat cushion frame assembly (Refer to GROUP 52A, Front Seat Assembly P.52A-17).

NO : There is an intermittent malfunction such as poor engaged connector(s) or open circuit (Refer to GROUP 00, How to Cope with Intermittent Malfunction P.00-15).

DTC B210D: Battery Voltage Low
DTC B210E: Battery Voltage High

Occupant Classification-ECU Power Supply Circuit

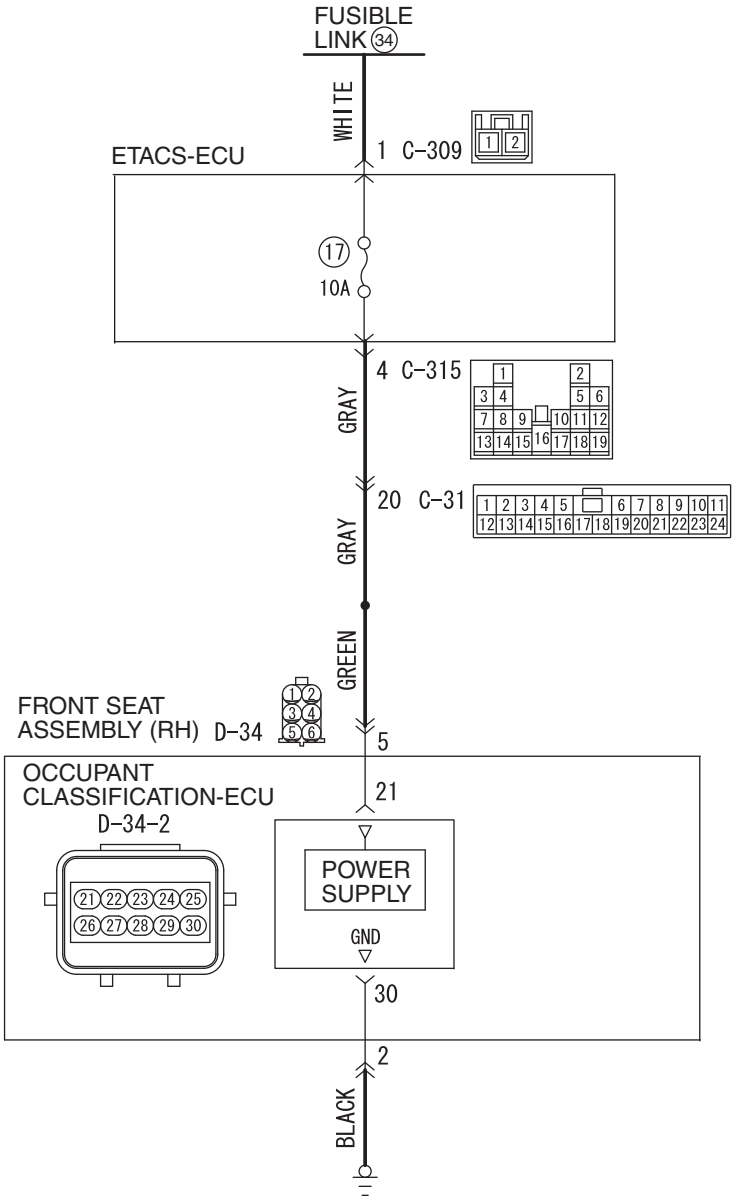

AC803418 AB

Connector: D-34-2

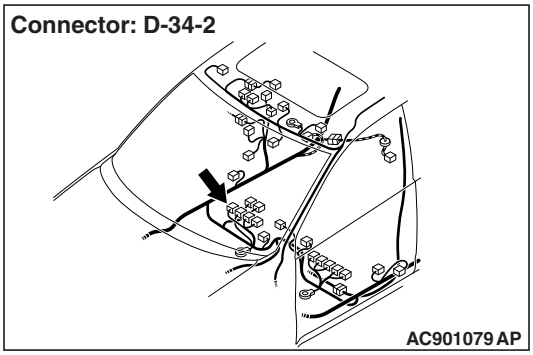

AC901079 AP

Connectors: C-309, C-315

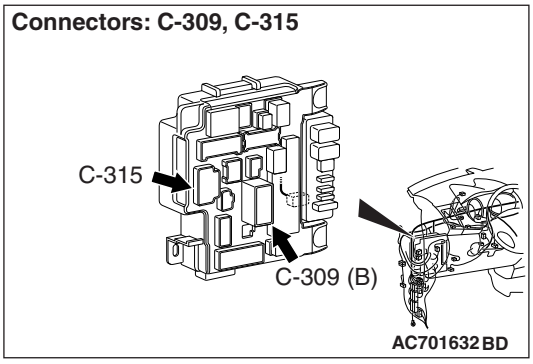

AC701632 BD

TSB Revision

⚠ CAUTION

If DTC B210D, B210E is set in the occupant classification-ECU, always diagnose the CAN main bus lines.

TROUBLE JUDGMENT

The occupant classification-ECU sets DTC B210D if the power supply fuse voltage decreases to the specified value or less, and sets DTC B210E if the power supply fuse voltage increases to the specified value or more.

TECHNICAL DESCRIPTION (COMMENT)

The power supply fuse or the occupant classification-ECU may have a problem.

TROUBLESHOOTING HINTS

- The power supply fuse may be defective.
- The occupant classification-ECU may be defective.
- The battery may be defective.
- The generator may be defective.
- The wiring harness or connectors may have loose, corroded, or damaged terminals, or terminals pushed back in the connector

DIAGNOSIS

Required Special Tools:

- MB991958: Scan Tool (M.U.T.-III Sub Assembly)
  - MB991824: Vehicle Communication Interface (V.C.I.)
  - MB991827: M.U.T.-III USB Cable
  - MB991910: M.U.T.-III Main Harness A (Vehicles with CAN communication system)

STEP 1. Measure the voltage at the occupant classification-ECU connector.

(1) Disconnect the D-34-2 occupant classification-ECU connector.

(2) Measure the voltage between the D-34-2 harness side connector terminal No. 21 and the body ground.
  - The voltage should measure 12 volts (battery positive voltage).

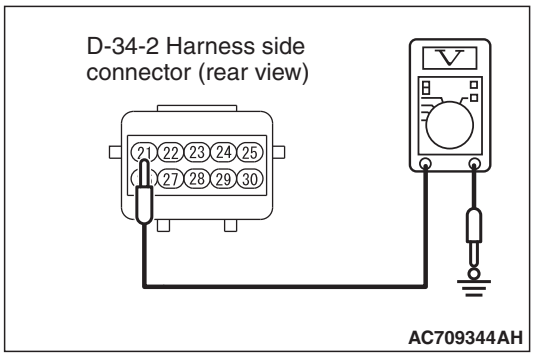

Q: Is the measured voltage approximately 12 volts (battery positive voltage)?

YES : Go to Step 10.
NO : Go to Step 2.

STEP 2. Power supply fuse No.17 check.

Q: Is the fuse in good condition?

YES : Go to Step 4.
NO : Go to Step 3.

STEP 3. Wiring harness check between the C-315 ETACS-ECU connector terminal No.4 and the D-34-2 occupant classification-ECU connector terminal No. 21.

- Short circuit check for SRS-ECU power supply wire

Q: Is the check result normal?

YES : Replace the power supply fuse.
NO : Repair the wiring harness. And then replace the power supply fuse.

STEP 4. Battery check.

Refer to GROUP 54A, Battery Test P.54A-8.

Q: Is the check result normal?

YES : Go to Step 5.
NO : Charge (B210D only) or replace the battery.

STEP 5. Measure the voltage at the ETACS-ECU connector.

(1) Disconnect the C-309 ETACS-ECU connector.
(2) Measure the voltage between the C-309 harness side connector terminal No. 1 and the body ground.
- The voltage should measure 12 volts (battery positive voltage).

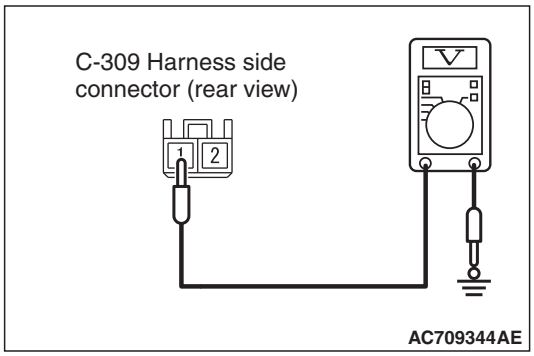

Q: Is the measured voltage approximately 12 volts (battery positive voltage)?

YES : Go to Step 7.
NO : Go to Step 6.

STEP 6. Wiring harness check between the fusible link (34) and the C-309 ETACS-ECU connector terminal No. 1.

- Open circuit check for ETACS-ECU power supply wire

Q: Is the check result normal?

YES : Go to Step 10.
NO : Repair the wiring harness.

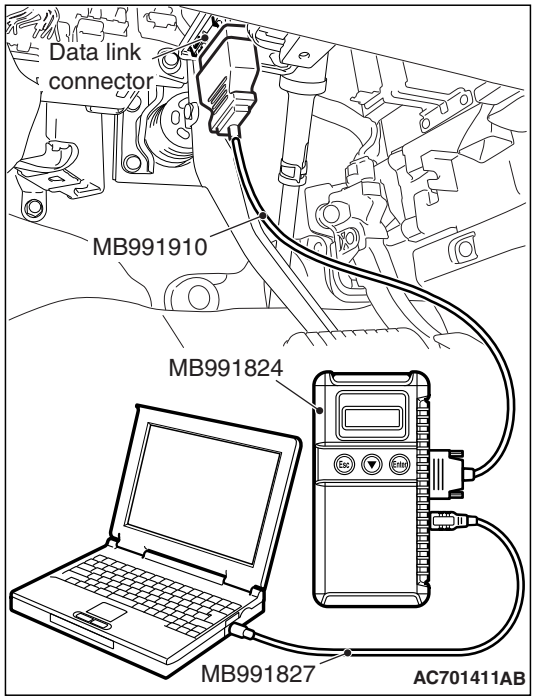

STEP 7. Using scan tool MB991958, diagnose the ETACS.

⚠ CAUTION

To prevent damage to scan tool MB991958, always turn the ignition switch to the "LOCK" (OFF) position before connecting or disconnecting scan tool MB991958.

(1) Connect scan tool MB991958. Refer to "How to connect the scan tool P.52B-28."
(2) Erase the DTC.
(3) Turn the ignition switch to the "ON" position.
(4) Diagnose the CAN bus line.
(5) Turn the ignition switch to the "LOCK" (OFF) position.

Q: Is the CAN bus line found to be normal?

YES : Diagnose the ETACS (Refer to GROUP 54A, ETACS, Diagnosis P.54A-742).

NO : Check the input signal of ETACS-ECU ignition switch (IG1) (Refer to GROUP 54A –ETACS, Symptom procedures P.54A-800). Than go to step 8.

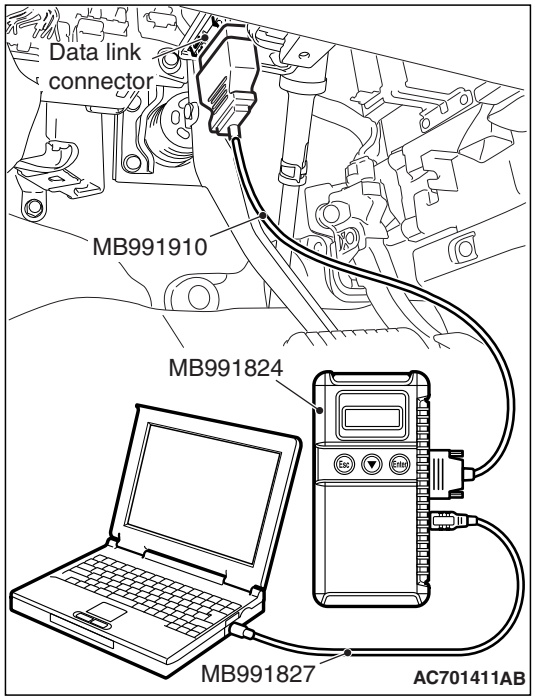

STEP 8. Using scan tool MB991958, diagnose the CAN bus line.

⚠ CAUTION

To prevent damage to scan tool MB991958, always turn the ignition switch to the "LOCK" (OFF) position before connecting or disconnecting scan tool MB991958.

(1) Connect scan tool MB991958. Refer to "How to connect the scan tool P.52B-28."
(2) Turn the ignition switch to the "ON" position.
(3) Diagnose the CAN bus line.
(4) Turn the ignition switch to the "LOCK" (OFF) position.

Q: Is the CAN bus line found to be normal?

YES : Go to Step 9.

NO : Repair the CAN bus line (Refer to GROUP 54C, Diagnosis P.54C-17).

STEP 9. Recheck for diagnostic trouble code.
Check again if the DTC is set.
(1) Erase the DTC.
(2) Turn the ignition switch to "ON" position.
(3) Check if the DTC is set.
(4) Turn the ignition switch to the "LOCK" (OFF) position.

Q: Is the DTC set?

YES : Go to Step 10.
NO : There is an intermittent malfunction such as poor engaged connector(s) or open circuit (Refer to GROUP 00, How to Cope with Intermittent Malfunction P.00-15).

STEP 10. Recheck for diagnostic trouble code.
Check again if the DTC is set.
(1) Erase the DTC.
(2) Turn the ignition switch to the "ON" position.
(3) Check if the DTC is set.
(4) Turn the ignition switch to the "LOCK" (OFF) position.

Q: Is DTC B210D or B210E set?

YES : Replace the passenger seat cushion frame assembly (Refer to GROUP 52A, Front Seat Assembly P.52A-19).
NO : There is an intermittent malfunction such as poor engaged connector(s) or open circuit (Refer to GROUP 00, How to Cope with Intermittent Malfunction P.00-15).

DTC B2206: Chassis number does not match

⚠ CAUTION
If DTC B2206 is set in the occupant classification-ECU, always diagnose the CAN bus line.

TROUBLE JUDGMENT

If the registered chassis number is different from the chassis number transmitted on the CAN bus lines, the occupant classification-ECU sets the DTC B2206.

JUDGMENT CRITERIA

If the chassis number registered to occupant classification-ECU and the chassis number on CAN bus lines do not match, the occupant classification-ECU determines that a problem has occurred.

TROUBLESHOOTING HINTS

- Chassis number not written
- The occupant classification-ECU may be defective.
- The CAN bus line may be defective.

DIAGNOSIS

Required Special Tools:
- MB991958: Scan Tool (M.U.T.-III Sub Assembly)
  - MB991824: Vehicle Communication Interface (V.C.I.)
  - MB991827: M.U.T.-III USB Cable
  - MB991910: M.U.T.-III Main Harness A (Vehicles with CAN communication system)

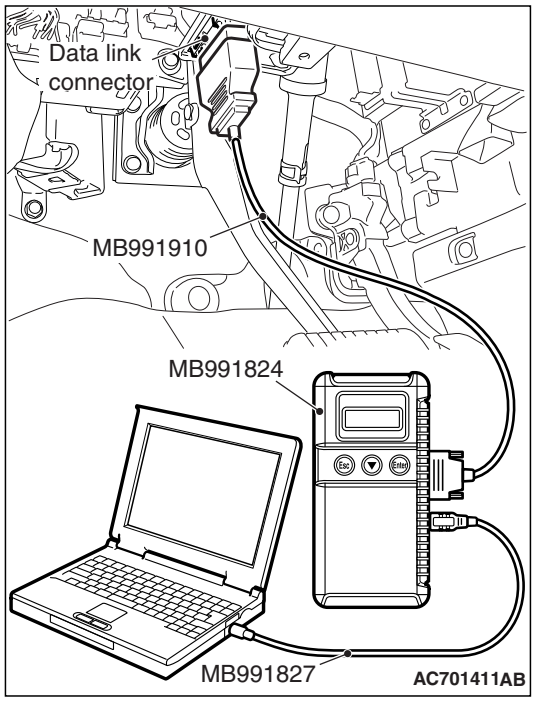

STEP 1. Using scan tool MB991958, diagnose the CAN bus line.

⚠ CAUTION

To prevent damage to scan tool MB991958, always turn the ignition switch to the "LOCK" (OFF) position before connecting or disconnecting scan tool MB991958.

(1) Connect scan tool MB991958. Refer to "How to connect the Scan Tool (M.U.T.-III) P.52B-28."
(2) Turn the ignition switch to the "ON" position.
(3) Diagnose the CAN bus line.
(4) Turn the ignition switch to the "LOCK" (OFF) position.

Q: Is the CAN bus line found to be normal?

YES : Accuracy check is performed. Then go to Step 2.
NO : Repair the CAN bus line (Refer to GROUP 54C, Diagnosis P.54C-17).

STEP 2. Recheck for diagnostic trouble code.

Check again if the DTC is set to the occupant classification-ECU.

(1) Zero calibration of occupant classification-ECU.
(2) Erase the DTC.
(3) Turn the ignition switch from "LOCK" (OFF) position to "ON" position.
(4) Check if DTC is set.
(5) Turn the ignition switch to the "LOCK" (OFF) position.

Q: Is the DTC set?

YES : Replace the passenger seat cushion frame assembly (Refer to GROUP 52A, Front Seat Assembly P.52A-17).
NO : There is an intermittent malfunction such as poor engaged connector(s) or open circuit (Refer to GROUP 00, How to Cope with Intermittent Malfunction P.00-15).

DTC U0020: CAN-B Bus Off Performance
DTC U0021: CAN-B Bus(H1) Circuit Open
DTC U0022: CAN-B Bus(H1) Shorted to Circuit Ground
DTC U0023: CAN-B Bus(H1) Shorted to Circuit Power Supply
DTC U0024: CAN-B Bus(L0) Circuit Open
DTC U0025: CAN-B Bus(L0) Shorted to Circuit Ground
DTC U0026: CAN-B Bus(L0) Shorted to Circuit Power Supply

⚠ CAUTION

- **If the DTC U0020, U0021, U0022, U0023, U0024, U0025, U0026 is set in the occupant classification-ECU, always diagnose the CAN main bus lines.**
- **When replacing the ECU, always check that the communication circuit is normal.**

DTC SET CONDITIONS

If the CAN-B circuit malfunction is present, the occupant classification-ECU sets the DTC U0020, U0021, U0022, U0023, U0024, U0025, U0026.

JUDGMENT CRITERIA

Because of the CAN-B bus circuit malfunction, if occupant classification-ECU becomes unable to perform the normal data transmission, occupant classification-ECU determines that an abnormality is present.

TROUBLESHOOTING HINTS

The CAN bus line may be defective

DIAGNOSIS

Required Special Tools:

- MB991958: Scan Tool (M.U.T.-III Sub Assembly)
  - MB991824: Vehicles Communication Interface (V.C.I.)
  - MB991827: M.U.T.-III USB Cable
  - MB991910: M.U.T.-III Main Harness A (Vehicles with CAN communication system)

STEP 1. Using scan tool MB991958, diagnose the CAN bus line.

(1) Turn the ignition switch to the "ON" position.
(2) Diagnose the CAN bus line.
(3) Turn the ignition switch to the "LOCK" (OFF) position.

Q: Is the CAN bus line found to be normal?

YES : Go to Step 2.
NO : Repair the CAN bus line (Refer to GROUP 54C, Diagnosis P.54C-17).

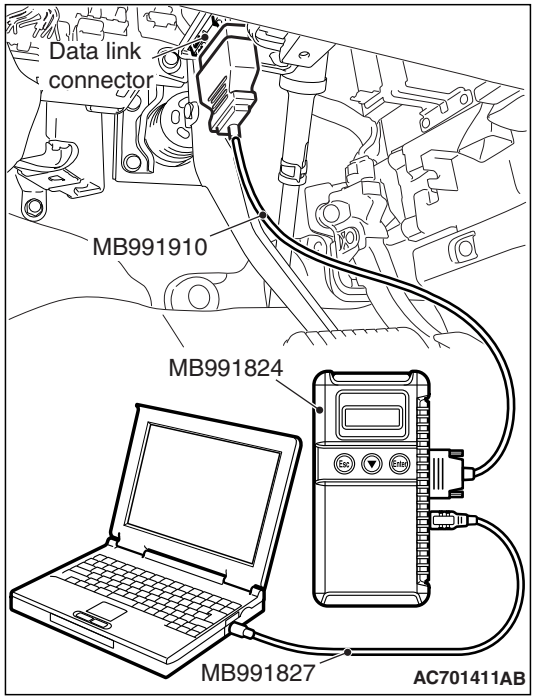

STEP 2. Recheck for diagnostic trouble code

Check again if the DTC is set to the occupant classification-ECU.

⚠ CAUTION

To prevent damage to scan tool MB991958, always turn the ignition switch to the "LOCK" (OFF) position before connecting or disconnecting scan tool MB991958.

(1) Connect scan tool MB991958. Refer to "How to connect the scan tool P.52B-28."
(2) Turn the ignition switch to the "ON" position.
(3) Check if DTC is set.
(4) Turn the ignition switch to the "LOCK" (OFF) position.

Q: Is the DTC set?

YES : Replace the passenger seat cushion frame assembly (Refer to GROUP 52A, Front Seat Assembly P.52A-19).

NO : There is an intermittent malfunction such as poor engaged connector(s) or open circuit (Refer to GROUP 00, How to Cope with Intermittent Malfunction P.00-15).

DTC U0141: ETACS CAN Timeout

⚠ CAUTION

- **If the DTC U0141 is set in the occupant classification-ECU, always diagnose the CAN main bus lines.**
- **When replacing the ECU, always check that the communication circuit is normal.**

DIAGNOSTIC FUNCTION

If the signal from ETACS-ECU cannot be received, the occupant classification-ECU sets the DTC U0141.

JUDGMENT CRITERIA

Because of the CAN-B bus circuit malfunction, if occupant classification-ECU becomes unable to perform the normal data transmission, occupant classification-ECU determines that an abnormality is present.

TROUBLESHOOTING HINTS

- The CAN bus line may be defective
- The ETACS-ECU may be defective
- The occupant classification-ECU may be defective

DIAGNOSIS

Required Special Tools:

- MB991958: Scan Tool (M.U.T.-III Sub Assembly)
  - MB991824: Vehicles Communication Interface (V.C.I.)
  - MB991827: M.U.T.-III USB Cable
  - MB991910: M.U.T.-III Main Harness A (Vehicles with CAN communication system)

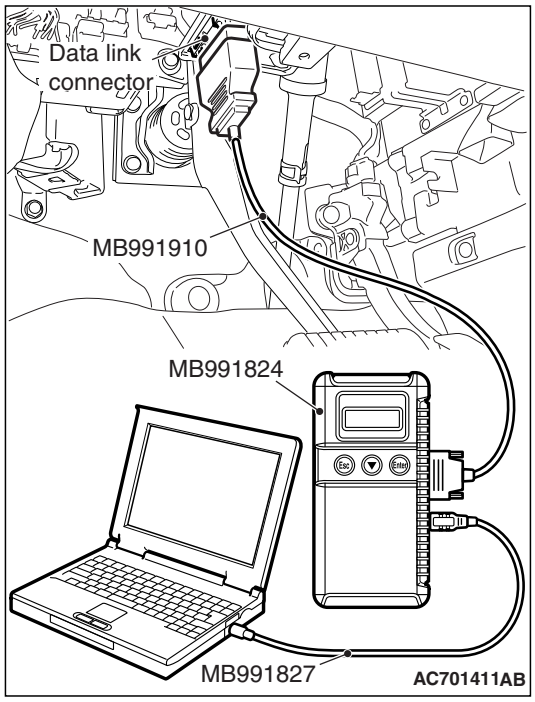

STEP 1. Using scan tool MB991958, diagnose the CAN bus line

⚠ CAUTION

To prevent damage to scan tool MB991958, always turn the ignition switch to the "LOCK" (OFF) position before connecting or disconnecting scan tool MB991958.

(1) Connect scan tool MB991958. Refer to "How to connect the scan tool P.52B-28."
(2) Turn the ignition switch to the "ON" position.
(3) Diagnose the CAN bus line.
(4) Turn the ignition switch to the "LOCK" (OFF) position.

Q: Is the CAN bus line found to be normal?

YES : Go to Step 2.
NO : Repair the CAN bus line (Refer to GROUP 54C, Diagnosis P.54C-17).

STEP 2. Using scan tool MB991958, read the ETACS-ECU diagnostic trouble code

Check again if the DTC is set to the ETACS-ECU.

Q: Is the DTC set?

YES : Diagnose the ETACS-ECU. Then go to Step 4.
NO : Go to Step 3.

STEP 3. Using scan tool MB991958, read diagnostic trouble code No. U0141 for other system.

Check if the DTC U0141 is set in SRS-ECU, combination meter, A/C-ECU, KOS-ECU or WCM, hands free module, CAN box unit, radio and CD player, satellite radio tuner.

Q: Is the DTC set?

YES : Replace the ETACS-ECU (Refer to GROUP 54A, ETACS –ETACS-ECU P.54A-841).
NO : Go to Step 4.

STEP 4. Recheck for diagnostic trouble code.

Check again if the DTC is set to the occupant classification-ECU.

(1) Erase the DTC.
(2) Turn the ignition switch from "LOCK" (OFF) position to "ON" position.
(3) Check if DTC is set.
(4) Turn the ignition switch to the "LOCK" (OFF) position.

Q: Is the DTC set?

YES : Replace the passenger seat cushion frame assembly (Refer to GROUP 52A, Front Seat Assembly P.52A-17).

NO : There is an intermittent malfunction such as poor engaged connector(s) or open circuit (Refer to GROUP 00, How to Cope with Intermittent Malfunction P.00-15).

DTC U0151: SRS-ECU CAN timeout

⚠ CAUTION

- **If DTC U0151 is set in the occupant classification-ECU, always diagnose the CAN main bus lines.**
- **When replacing the ECU, always check that the communication circuit is normal.**

DIAGNOSTIC FUNCTION

If the signal from SRS-ECU cannot be received, the occupant classification system sets DTC U0151.

JUDGMENT CRITERIA

Because of the CAN-B bus circuit malfunction, if occupant classification-ECU becomes unable to perform the normal data transmission, occupant classification-ECU determines that an abnormality is present.

TROUBLESHOOTING HINTS

- The CAN bus line may be defective
- The SRS-ECU may be defective
- The occupant classification-ECU may be defective

DIAGNOSIS

Required Special Tools:

- MB991958: Scan Tool (M.U.T.-III Sub Assembly)
  - MB991824: Vehicles Communication Interface (V.C.I.)
  - MB991827: M.U.T.-III USB Cable
  - MB991910: M.U.T.-III Main Harness A (Vehicles with CAN communication system)

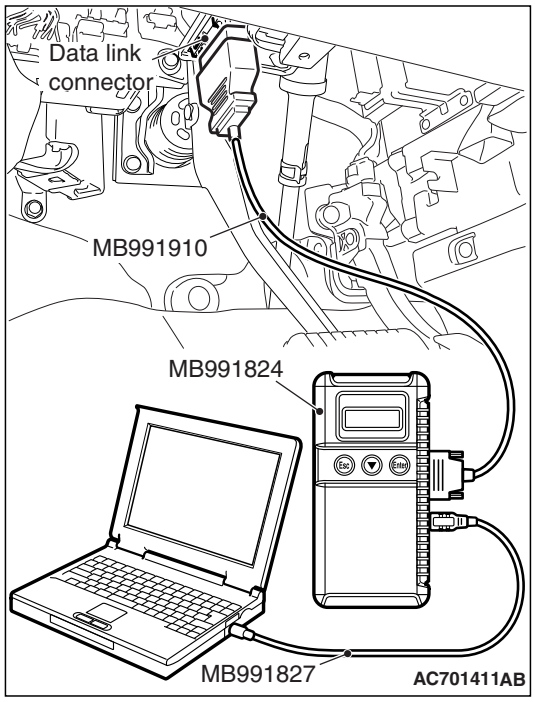

STEP 1. Using scan tool MB991958, diagnose the CAN bus line.

⚠ CAUTION

To prevent damage to scan tool MB991958, always turn the ignition switch to the "LOCK" (OFF) position before connecting or disconnecting scan tool MB991958.

(1) Connect scan tool MB991958. Refer to "How to connect the Scan Tool (M.U.T.-III) P.52B-28."
(2) Turn the ignition switch to the "ON" position.
(3) Diagnose the CAN bus line.
(4) Turn the ignition switch to the "LOCK" (OFF) position.

Q: Is the CAN bus line found to be normal?

YES : Go to Step 2.
NO : Repair the CAN bus line (Refer to GROUP 54C, Diagnosis P.54C-17).

STEP 2. Using scan tool MB991958, read the SRS-ECU diagnostic trouble code.

Check again if the DTC is set to the SRS-ECU.

Q: Is the DTC set?

YES : Diagnose the SRS-ECU. Then go to Step 4.
NO : Go to Step 3.

STEP 3. Using scan tool MB991958, read diagnostic trouble code No. U0151 for other system.

Check if the DTC U0151 is set in ETACS-ECU, combination meter, A/C-ECU, KOS-ECU or WCM, hands free module, CAN box unit, radio and CD player, satellite radio tuner.

Q: Is the DTC set?

YES : Replace the SRS-ECU (Refer to GROUP 52B, SRS-ECU P.52B-440).
NO : Go to Step 4.

STEP 4. Recheck for diagnostic trouble code.

Check again if the DTC is set to the occupant classification-ECU.

(1) Erase the DTC.
(2) Turn the ignition switch from "LOCK" (OFF) position to "ON" position.
(3) Check if DTC is set.
(4) Turn the ignition switch to the "LOCK" (OFF) position.

Q: Is the DTC set?

YES : Replace the passenger seat cushion frame assembly (Refer to GROUP 52A, Front Seat Assembly P.52A-17).

NO : There is an intermittent malfunction such as poor engaged connector(s) or open circuit (Refer to GROUP 00, How to Cope with Intermittent Malfunction P.00-15).

DTC U0155: Combination Meter CAN Timeout

⚠ CAUTION

- **If the DTC U0155 is set in the occupant classification-ECU, always diagnose the CAN main bus lines.**
- **When replacing the ECU, always check that the communication circuit is normal.**

TROUBLE JUDGMENT

If the signal from combination meter cannot be received, the occupant classification-ECU sets the DTC U0155.

JUDGMENT CRITERIA

Because of the CAN-B bus circuit malfunction, if occupant classification-ECU becomes unable to perform the normal data transmission, occupant classification-ECU determines that an abnormality is present.

TROUBLESHOOTING HINTS

- The CAN bus line may be defective
- The combination meter may be defective
- The occupant classification-ECU may be defective

DIAGNOSIS

Required Special Tools:

- MB991958: Scan Tool (M.U.T.-III Sub Assembly)
  - MB991824: Vehicles Communication Interface (V.C.I.)
  - MB991827: M.U.T.-III USB Cable
  - MB991910: M.U.T.-III Main Harness A (Vehicles with CAN communication system)

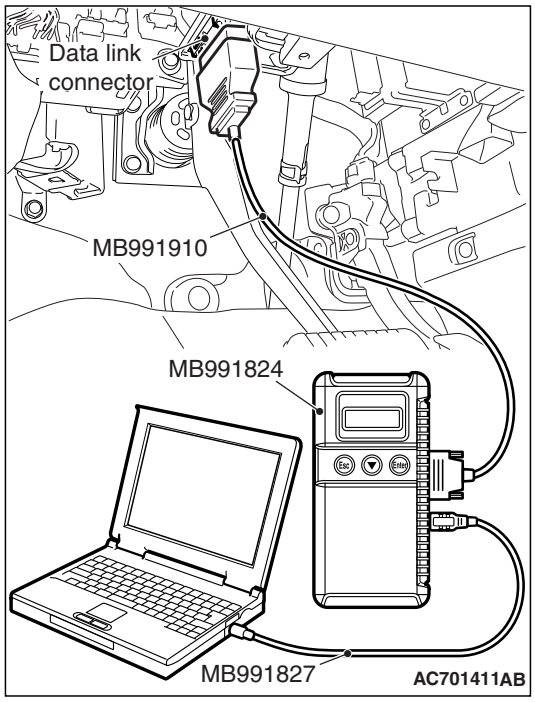

STEP 1. Using scan tool MB991958, diagnose the CAN bus line.

⚠ CAUTION

To prevent damage to scan tool MB991958, always turn the ignition switch to the "LOCK" (OFF) position before connecting or disconnecting scan tool MB991958.

(1) Connect scan tool MB991958. Refer to "How to connect the scan tool P.52B-28."
(2) Turn the ignition switch to the "ON" position.
(3) Diagnose the CAN bus line.
(4) Turn the ignition switch to the "LOCK" (OFF) position.

Q: Is the CAN bus line found to be normal?

YES : Go to Step 2.
NO : Repair the CAN bus line (Refer to GROUP 54C, Diagnosis P.54C-17).

STEP 2. Using scan tool MB991958, read the combination meter diagnostic trouble code

Check if DTC is set to the combination meter.

Q: Is the DTC set?

YES : Diagnose the combination meter. Then go to Step 4.
NO : Go to Step 3.

STEP 3. Using scan tool MB991958, read diagnostic trouble code No. U0155 for other system.

Check if the DTC U0155 is set in ETACS-ECU, SRS-ECU, A/C-ECU, KOS-ECU or WCM, hands free module, CAN box unit, radio and CD player, satellite radio tuner.

Q: Is the DTC set?

YES : Replace the combination meter (Refer to GROUP 54A, Combination Meter P.54A-123).
NO : Go to Step 4.

STEP 4. Recheck for diagnostic trouble code.

Check again if the DTC is set to the occupant classification-ECU.

(1) Erase the DTC.
(2) Turn the ignition switch from "LOCK" (OFF) position to "ON" position.
(3) Check if DTC is set.
(4) Turn the ignition switch to the "LOCK" (OFF) position.

Q: Is the DTC set?

YES : Replace the passenger seat cushion frame assembly (Refer to GROUP 52A, Front Seat Assembly P.52A-17).

NO : There is an intermittent malfunction such as poor engaged connector(s) or open circuit (Refer to GROUP 00, How to Cope with Intermittent Malfunction P.00-15).

DTC U0164: A/C-ECU CAN Timeout

⚠ CAUTION

- **If the DTC U0164 is set in the occupant classification-ECU, always diagnose the CAN main bus lines.**
- **When replacing the ECU, always check that the communication circuit is normal.**

DIAGNOSTIC FUNCTION

If the signal from A/C-ECU cannot be received, the occupant classification-ECU sets the DTC U0164.

JUDGMENT CRITERIA

Because of the CAN-B bus circuit malfunction, if the occupant classification-ECU becomes unable to perform the normal data transmission, the occupant classification-ECU determines that an abnormality is present.

TROUBLESHOOTING HINTS

- The CAN bus line may be defective
- The A/C-ECU may be defective
- The occupant classification-ECU may be defective

DIAGNOSIS

Required Special Tools:

- MB991958: Scan Tool (M.U.T.-III Sub Assembly)
  - MB991824: Vehicles Communication Interface (V.C.I.)
  - MB991827: M.U.T.-III USB Cable
  - MB991910: M.U.T.-III Main Harness A (Vehicles with CAN communication system)

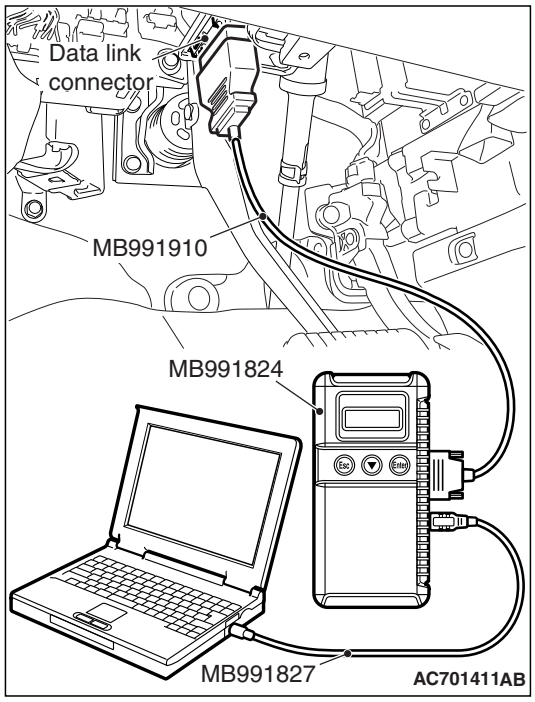

STEP 1. Using scan tool MB991958, diagnose the CAN bus line.

⚠ CAUTION

To prevent damage to scan tool MB991958, always turn the ignition switch to the "LOCK" (OFF) position before connecting or disconnecting scan tool MB991958.

(1) Connect scan tool MB991958. Refer to "How to connect the Scan Tool (M.U.T.-III) P.52B-28."
(2) Turn the ignition switch to the "ON" position.
(3) Diagnose the CAN bus line.
(4) Turn the ignition switch to the "LOCK" (OFF) position.

Q: Is the CAN bus line found to be normal?

YES : Go to Step 2.
NO : Repair the CAN bus line (Refer to GROUP 54C, Diagnosis P.54C-17).

STEP 2. Using scan tool MB991958, read the A/C diagnostic trouble code.

Check if DTC is set to the A/C-ECU.

Q: Is the DTC set?

YES : Diagnose the A/C. Then go to Step 4.
NO : Go to Step 3.

STEP 3. Using scan tool MB991958, read diagnostic trouble code No. U0164 for other system.

Check if the DTC U0164 is set in ETACS-ECU, SRS-ECU, combination meter, KOS-ECU or WCM, hands free module, CAN box unit, radio and CD player, satellite radio tuner.

Q: Is the DTC set?

YES : Replace the A/C-ECU (Refer to GROUP 55A, A/C-ECU P.55A-125).
NO : Go to Step 4.

STEP 4. Recheck for diagnostic trouble code.

Check again if the DTC is set to the occupant classification-ECU.

(1) Erase the DTC.
(2) Turn the ignition switch from "LOCK" (OFF) position to "ON" position.
(3) Check if DTC is set.
(4) Turn the ignition switch to the "LOCK" (OFF) position.

Q: Is the DTC set?

YES : Replace the passenger seat cushion frame assembly (Refer to GROUP 52A, Front Seat Assembly P.52A-17).

NO : There is an intermittent malfunction such as poor engaged connector(s) or open circuit (Refer to GROUP 00, How to Cope with Intermittent Malfunction P.00-15).

DTC U0168: KOS-ECU or WCM CAN Timeout

⚠ CAUTION

- **If DTC U0168 is set in the occupant classification-ECU, always diagnose the CAN main bus lines.**
- **When replacing the ECU, always check that the communication circuit is normal.**

DIAGNOSTIC FUNCTION

If the signal from KOS-ECU or WCM cannot be received, the occupant classification-ECU sets the DTC U0168.

JUDGMENT CRITERIA

Because of the CAN-B bus circuit malfunction, if the occupant classification-ECU becomes unable to perform the normal data transmission, the occupant classification-ECU determines that an abnormality is present.

TROUBLESHOOTING HINTS

- Malfunction of CAN bus line may be defective.
- Malfunction of the KOS-ECU may be defective.
- Malfunction of the WCM may be defective.
- Malfunction of the occupant classification-ECU may be defective.

DIAGNOSIS

Required Special Tools:

- MB991958: Scan Tool (M.U.T.-III Sub Assembly)
  - MB991824: Vehicles Communication Interface (V.C.I.)
  - MB991827: M.U.T.-III USB Cable
  - MB991910: M.U.T.-III Main Harness A (Vehicles with CAN communication system)

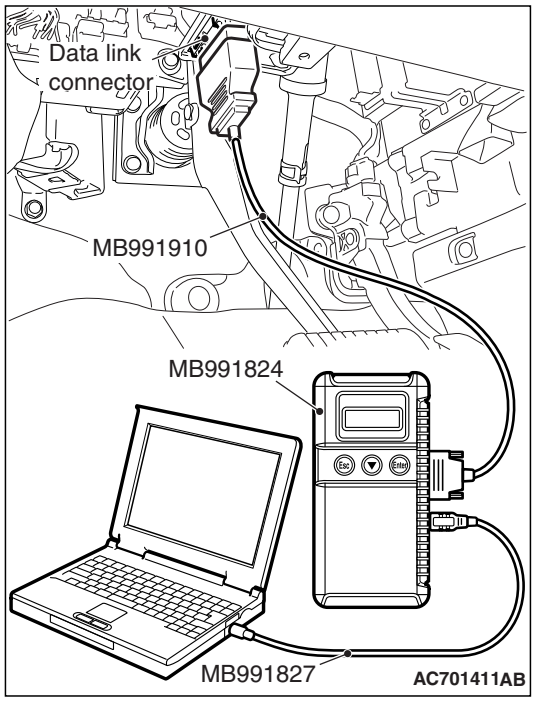

STEP 1. Using scan tool MB991958, diagnose the CAN bus line.

⚠ CAUTION

To prevent damage to scan tool MB991958, always turn the ignition switch to the "LOCK" (OFF) position before connecting or disconnecting scan tool MB991958.

(1) Connect scan tool MB991958. Refer to "How to connect the Scan Tool (M.U.T.-III) P.52B-28."
(2) Turn the ignition switch to the "ON" position.
(3) Diagnose the CAN bus line.
(4) Turn the ignition switch to the "LOCK" (OFF) position.

Q: Is the CAN bus line found to be normal?

YES : Go to Step 2.
NO : Repair the CAN bus line (Refer to GROUP 54C, Diagnosis P.54C-17).

STEP 2. Using scan tool MB991958, read the KOS-ECU or WCM diagnostic trouble code.

Check again if the DTC is set to the KOS-ECU or WCM.

Q: Is the DTC set?

YES : Diagnose the KOS or WCM. Then go to Step 4.
NO : Go to Step 3.

STEP 3. Using scan tool MB991958, read diagnostic trouble code No. U0168 for other system.

Check if the DTC U0168 is set in ETACS-ECU, SRS-ECU, combination meter, A/C-ECU, hands free module, CAN box unit, radio and CD player, satellite radio tuner.

Q: Is the DTC set?

YES : Replace the KOS -ECU (Refer to GROUP 42B, KOS-ECU P.42B-208) or WCM (Refer to GROUP 42C, WCM P.42C-116)
NO : Go to Step 4.

STEP 4. Recheck for diagnostic trouble code.

Check again if the DTC is set to the occupant classification-ECU.

(1) Erase the DTC.
(2) Turn the ignition switch from "LOCK" (OFF) position to "ON" position.
(3) Check if DTC is set.
(4) Turn the ignition switch to the "LOCK" (OFF) position.

Q: Is the DTC set?

YES : Replace the passenger seat cushion frame assembly (Refer to GROUP 52A, Front Seat Assembly P.52A-17).

NO : There is an intermittent malfunction such as poor engaged connector(s) or open circuit (Refer to GROUP 00, How to Cope with Intermittent Malfunction P.00-15).

DTC U0184: Audio CAN Timeout

⚠ CAUTION

- **If the DTC U0184 is set in the occupant classification-ECU, always diagnose the CAN main bus lines.**
- **When replacing the ECU, always check that the communication circuit is normal.**

DIAGNOSTIC FUNCTION

When the signals from radio and CD player or CD changer cannot be received, the occupant classification-ECU sets the DTC U0184.

JUDGMENT CRITERIA

Because of the CAN-B bus circuit malfunction, if occupant classification-ECU becomes unable to perform the normal data transmission, occupant classification-ECU determines that an abnormality is present.

TROUBLESHOOTING HINTS

- The CAN bus line may be defective
- The radio and CD player or CD changer may be defective
- The occupant classification-ECU may be defective

DIAGNOSIS

Required Special Tools:

- MB991958: Scan Tool (M.U.T.-III Sub Assembly)
  - MB991824: Vehicles Communication Interface (V.C.I.)
  - MB991827: M.U.T.-III USB Cable
  - MB991910: M.U.T.-III Main Harness A (Vehicles with CAN communication system)

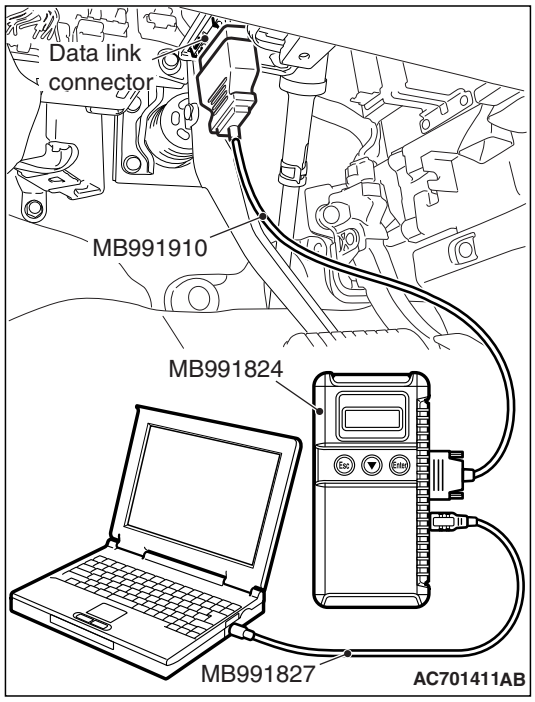

STEP 1. Using scan tool MB991958, diagnose the CAN bus line.

⚠ CAUTION

To prevent damage to scan tool MB991958, always turn the ignition switch to the "LOCK" (OFF) position before connecting or disconnecting scan tool MB991958.

(1) Connect scan tool MB991958. Refer to "How to connect the scan tool P.52B-28."
(2) Turn the ignition switch to the "ON" position.
(3) Diagnose the CAN bus line.
(4) Turn the ignition switch to the "LOCK" (OFF) position.

Q: Is the CAN bus line found to be normal?

YES : Go to Step 2.
NO : Repair the CAN bus line (Refer to GROUP 54C, Diagnosis P.54C-17).

STEP 2. Using scan tool MB991958, read the audio diagnostic trouble code.

Check if the DTC is set to the audio.

Q: Is the DTC set?

YES : Diagnose the radio and CD player. Then go to Step 4.
NO : Go to Step 3.

STEP 3. Using scan tool MB991958, read diagnostic trouble code No. U0184 for other system.

Check if the DTC U0184 is set in ETACS-ECU, SRS-ECU, combination meter, A/C-ECU, KOS-ECU or WCM, hands free module, satellite radio tuner.

Q: Is the DTC set?

YES : Replace the radio and CD player (Refer to GROUP 54A, Radio and CD player P.54A-432).
NO : Go to Step 4.

STEP 4. Recheck for diagnostic trouble code.

Check again if the DTC is set to the occupant classification-ECU.

(1) Erase the DTC.
(2) Turn the ignition switch from "LOCK" (OFF) position to "ON" position.
(3) Check if DTC is set.
(4) Turn the ignition switch to the "LOCK" (OFF) position.

Q: Is the DTC set?

YES : Replace the passenger seat cushion frame assembly (Refer to GROUP 52A, Front Seat Assembly P.52A-17).

NO : There is an intermittent malfunction such as poor engaged connector(s) or open circuit (Refer to GROUP 00, How to Cope with Intermittent Malfunction P.00-15).

DTC U0195: Satellite Radio Tuner CAN Timeout

⚠ CAUTION

- **If the DTC U0195 is set in the occupant classification-ECU, always diagnose the CAN main bus lines.**
- **When replacing the ECU, always check that the communication circuit is normal.**

TROUBLE JUDGMENT

If the signal from satellite radio tuner cannot be received, the occupant classification-ECU sets the DTC U0195.

JUDGMENT CRITERIA

Because of the CAN-B bus circuit malfunction, if occupant classification-ECU becomes unable to perform the normal data transmission, occupant classification-ECU determines that an abnormality is present.

TROUBLESHOOTING HINTS

- The CAN bus may be defective.
- The satellite radio tuner may be defective.
- The occupant classification-ECU may be defective.

DIAGNOSIS

Required Special Tools:

- MB991958: Scan Tool (M.U.T.-III Sub Assembly)
  - MB991824: Vehicles Communication Interface (V.C.I.)
  - MB991827: M.U.T.-III USB Cable
  - MB991910: M.U.T.-III Main Harness A (Vehicles with CAN communication system)

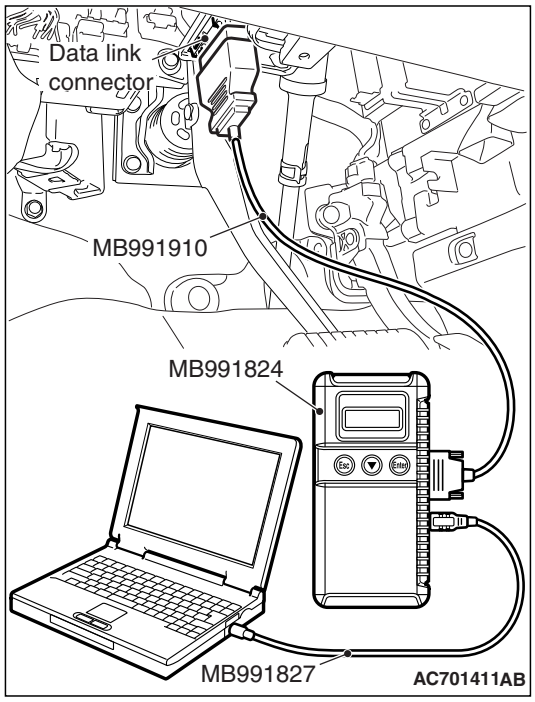

STEP 1. Using scan tool MB991958, diagnose the CAN bus line.

⚠ CAUTION

To prevent damage to scan tool MB991958, always turn the ignition switch to the "LOCK" (OFF) position before connecting or disconnecting scan tool MB991958.

(1) Connect scan tool MB991958. Refer to "How to connect the scan tool P.52B-28."
(2) Turn the ignition switch to the "ON" position.
(3) Diagnose the CAN bus line.
(4) Turn the ignition switch to the "LOCK" (OFF) position.

Q: Is the CAN bus line found to be normal?

YES : Go to Step 2.
NO : Repair the CAN bus line (Refer to GROUP 54C, Diagnosis P.54C-17).

STEP 2. Using scan tool MB991958, read the satellite radio tuner diagnostic trouble code.

Check if DTC is set to the satellite radio tuner.

Q: Is the DTC set?

YES : Diagnose the satellite radio tuner. Then go to Step 4.
NO : Go to Step 3.

STEP 3. Using scan tool MB991958, read diagnostic trouble code No. U0195 for other system.

Check if the DTC U0195 is set in ETACS-ECU, SRS-ECU, A/C-ECU, hands free module, CAN box unit, radio and CD player, WCM.

Q: Is the DTC set?

YES : Replace the satellite radio tuner (Refer to GROUP 54A, Satellite Radio Tuner P.54A-685).
NO : Go to Step 4.

STEP 4. Recheck for diagnostic trouble code.

Check again if the DTC is set to the occupant classification-ECU.

(1) Erase the DTC.
(2) Turn the ignition switch from "LOCK" (OFF) position to "ON" position.
(3) Check if DTC is set.
(4) Turn the ignition switch to the "LOCK" (OFF) position.

Q: Is the DTC set?

YES : Replace the passenger seat cushion frame assembly (Refer to GROUP 52A, Front Seat Assembly P.52A-17).

NO : There is an intermittent malfunction such as poor engaged connector(s) or open circuit (Refer to GROUP 00, How to Cope with Intermittent Malfunction P.00-15).

DTC U0197: Hands Free Module CAN Timeout

⚠ CAUTION

- **If the DTC U0197 is set in the occupant classification-ECU, always diagnose the CAN main bus lines.**
- **When replacing the ECU, always check that the communication circuit is normal.**

DIAGNOSTIC FUNCTION

When the signals from hands free module cannot be received, the occupant classification-ECU sets the DTC U0197.

JUDGMENT CRITERIA

Because of the CAN-B bus circuit malfunction, if occupant classification-ECU becomes unable to perform the normal data transmission, occupant classification-ECU determines that an abnormality is present.

TROUBLESHOOTING HINTS

- The CAN bus line may be defective.
- The hands free module may be defective.
- The occupant classification-ECU may be defective.

DIAGNOSIS

Required Special Tools:

- MB991958: Scan Tool (M.U.T.-III Sub Assembly)
  - MB991824: Vehicles Communication Interface (V.C.I.)
  - MB991827: M.U.T.-III USB Cable
  - MB991910: M.U.T.-III Main Harness A (Vehicles with CAN communication system)

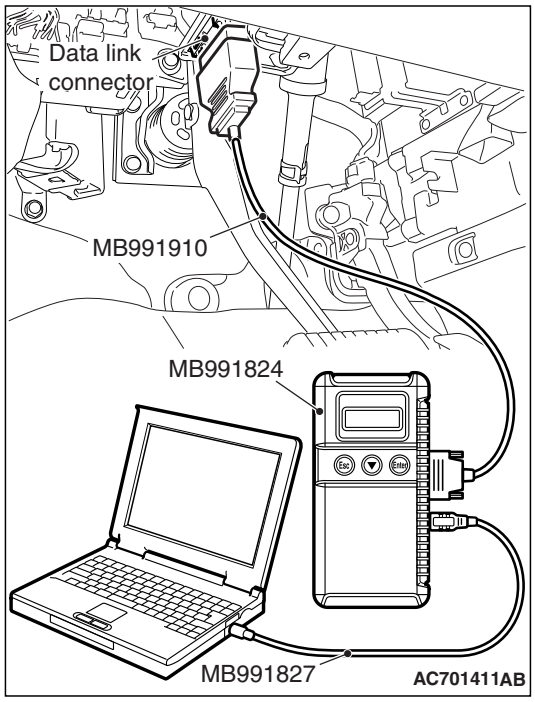

STEP 1. Using scan tool MB991958, diagnose the CAN bus line.

⚠ CAUTION

To prevent damage to scan tool MB991958, always turn the ignition switch to the "LOCK" (OFF) position before connecting or disconnecting scan tool MB991958.

(1) Connect scan tool MB991958. Refer to "How to connect the scan tool P.52B-28."
(2) Turn the ignition switch to the "ON" position.
(3) Diagnose the CAN bus line.
(4) Turn the ignition switch to the "LOCK" (OFF) position.

Q: Is the CAN bus line found to be normal?

YES : Go to Step 2.
NO : Repair the CAN bus line (Refer to GROUP 54C, Diagnosis P.54C-17).

STEP 2. Using scan tool MB991958, read the hands free module diagnostic trouble code.

Check if the DTC is set to the hands free module.

Q: Is the DTC set?

YES : Diagnose the hands-free cellular phone system. Then go to Step 4.
NO : Go to Step 3.

STEP 3. Using scan tool MB991958, read diagnostic trouble code No. U0197 for other system.

Check if the DTC U0197 is set in ETACS-ECU, SRS-ECU, combination meter, A/C-ECU, KOS-ECU or WCM, CAN box unit, radio and CD player, satellite radio tuner.

Q: Is the DTC set?

YES : Replace the hands free module (Refer to GROUP 54A, Hands Free Cellular Phone System P.54A-648).
NO : Go to Step 4.

STEP 4. Recheck for diagnostic trouble code.

Check again if the DTC is set to the occupant classification-ECU.

(1) Erase the DTC.
(2) Turn the ignition switch from "LOCK" (OFF) position to "ON" position.
(3) Check if DTC is set.
(4) Turn the ignition switch to the "LOCK" (OFF) position.

Q: Is the DTC set?

YES : Replace the passenger seat cushion frame assembly (Refer to GROUP 52A, Front Seat Assembly P.52A-17).

NO : There is an intermittent malfunction such as poor engaged connector(s) or open circuit (Refer to GROUP 00, How to Cope with Intermittent Malfunction P.00-15).

DTC U0245: CAN box unit CAN timeout

⚠ CAUTION

- **If DTC U0245 is set in the occupant classification-ECU, always diagnose the CAN main bus lines.**
- **When replacing the ECU, always check that the communication circuit is normal.**

DIAGNOSTIC FUNCTION

When the signals from audio visual navigation unit cannot be received, the occupant classification system sets DTC U0245.

JUDGMENT CRITERIA

Because of the CAN-B bus circuit malfunction, if audio visual navigation becomes unable to perform the normal data transmission, occupant classification-ECU determines that an abnormality is present.

TROUBLESHOOTING HINTS

- The CAN bus line may be defective.
- The occupant classification-ECU may be defective.
- The audio visual navigation unit may be defective.

DIAGNOSIS

Required Special Tools:

- MB991958: Scan Tool (M.U.T.-III Sub Assembly)
  - MB991824: Vehicles Communication Interface (V.C.I.)
  - MB991827: M.U.T.-III USB Cable
  - MB991910: M.U.T.-III Main Harness A (Vehicles with CAN communication system)

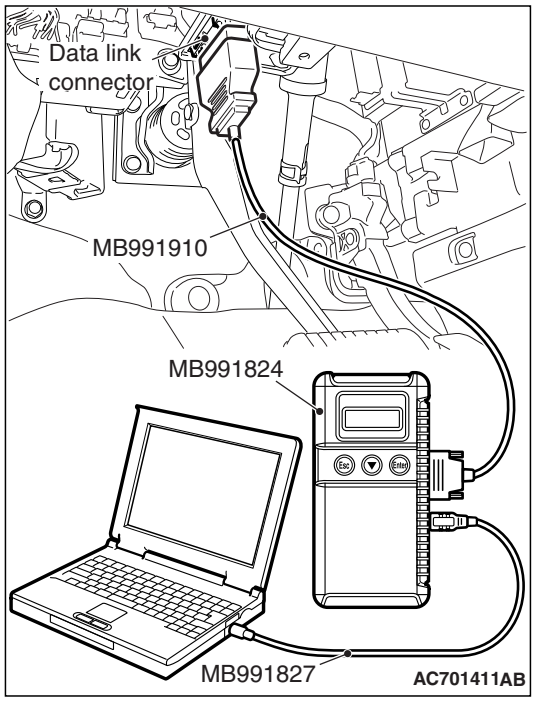

STEP 1. Using scan tool MB991958, diagnose the CAN bus line.

⚠ CAUTION

To prevent damage to scan tool MB991958, always turn the ignition switch to the "LOCK" (OFF) position before connecting or disconnecting scan tool MB991958.

(1) Connect scan tool MB991958. Refer to "How to connect the Scan Tool (M.U.T.-III) P.52B-28."
(2) Turn the ignition switch to the "ON" position.
(3) Diagnose the CAN bus line.
(4) Turn the ignition switch to the "LOCK" (OFF) position.

Q: Is the CAN bus line found to be normal?

YES : Go to Step 2.
NO : Repair the CAN bus line (Refer to GROUP 54C, Diagnosis P.54C-17).

STEP 2. Using scan tool MB991958, read the audio visual navigation unit diagnostic trouble code.

Check if DTC is set to the audio visual navigation unit.

Q: Is the DTC set?

YES : Diagnose the MMCS. Then go to Step 4.
NO : Go to Step 3.

STEP 3. Using scan tool MB991958, read diagnostic trouble code No. U0245 for other system.

Check if the DTC U0245 is set in ETACS-ECU, combination meter, KOS-ECU or WCM, hands free module.

Q: Is the DTC set?

YES : Replace the CAN box unit (Refer to GROUP 54A, MMCSP.54A-568).
NO : Go to Step 4.

STEP 4. Recheck for diagnostic trouble code.

Check again if the DTC is set to the occupant classification-ECU.

(1) Erase the DTC.
(2) Turn the ignition switch from "LOCK" (OFF) position to "ON" position.
(3) Check if DTC is set.
(4) Turn the ignition switch to the "LOCK" (OFF) position.

Q: Is the DTC set?

YES : Replace the passenger seat cushion frame assembly (Refer to GROUP 52A, Front Seat Assembly P.52A-17).

NO : There is an intermittent malfunction such as poor engaged connector(s) or open circuit (Refer to GROUP 00, How to Cope with Intermittent Malfunction P.00-15).

DTC U1419: The signal from a weight sensor (front: LH) is unusual
DTC U141A: The signal from a weight sensor (front: RH) is unusual
DTC U141B: The signal from a weight sensor (rear: LH) is unusual
DTC U141C: The signal from a weight sensor (rear: RH) is unusual
DTC U1423: The signal from a weight sensor is unusual

DTC SET CONDITIONS

There DTCs are set if communication between the weight sensor and the occupant classification-ECU is not possible or faulty.

TROUBLESHOOTING HINTS

- Malfunction of weight sensor
- The occupant classification-ECU may be defective

DIAGNOSIS

Required Special Tools:

- MB991958: Scan Tool (M.U.T.-III Sub Assembly)
  - MB991824: Vehicle Communication Interface (V.C.I.)
  - MB991827: M.U.T.-III USB Cable
  - MB991910: M.U.T.-III Main Harness A (Vehicles with CAN communication system)

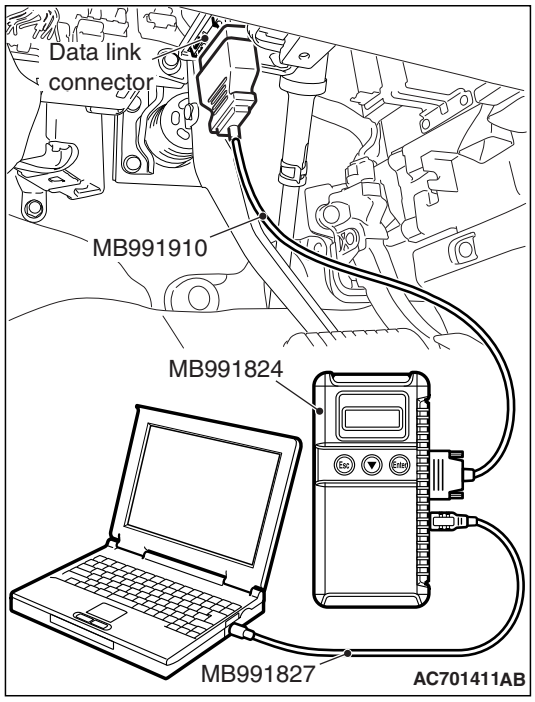

STEP 1. Recheck for diagnostic trouble code.

Check again if the DTC is set.

(1) Erase the DTC.
(2) Turn the ignition switch to the "ON" position.
(3) Check if the DTC is set.
(4) Turn the ignition switch to the "LOCK" (OFF) position.

Q: Is the DTC set?

YES : Go to Step 2.

NO : There is an intermittent malfunction such as poor engaged connector(s) or open circuit (Refer to GROUP 00, How to Cope with Intermittent Malfunction P.00-15).

STEP 2. Check the weight sensor.

Check the diagnostic trouble code.

Q: Is DTC U1419, U141A, U141B, U141C, U1423 set?

YES : Replace the passenger seat cushion frame assembly (Refer to GROUP 52A, Front Seat Assembly P.52A-17).

NO : The procedure is complete.

TROUBLE SYMPTOM CHART

M1524003401067

⚠ CAUTION

During diagnosis, a DTC code associated with another system may be set when the ignition switch is turned on with connector(s) disconnected. After completing the repair, confirm all systems for DTC code(s). If DTC code(s) are set, erase them all.

SYMPTOM	INSPECTION PROCEDURE No.	REFERENCE PAGE
Communication between the scan tool and the SRS-ECU is not possible.	1	P.52B-414
Power supply circuit system	2	P.52B-415
The SRS warning light does not illuminate.	3	P.52B-419
The SRS warning light does not go out.	4	P.52B-421

SYMPTOM PROCEDURES

Inspection procedure 1: Communication between the Scan Tool and the SRS-ECU is not possible.

TECHNICAL DESCRIPTION (COMMENT)

If the scan tool (M.U.T.-III Sub Assembly) can not communicate with the SRS system, the CAN bus lines may be defective. If the SRS system does not work, the SRS-ECU or its power supply circuit may be defective.

TROUBLESHOOTING HINTS (The most likely causes for this case:)

- Damaged wiring harness or connector
- Malfunction of the SRS-ECU

DIAGNOSIS

Required Special Tools:

- MB991958: Scan Tool (M.U.T.-III Sub Assembly)
  - MB991824: Vehicle Communication Interface (V.C.I.)
  - MB991827: M.U.T.-III USB Cable
  - MB991910: M.U.T.-III Main Harness A (Vehicles with CAN communication system)

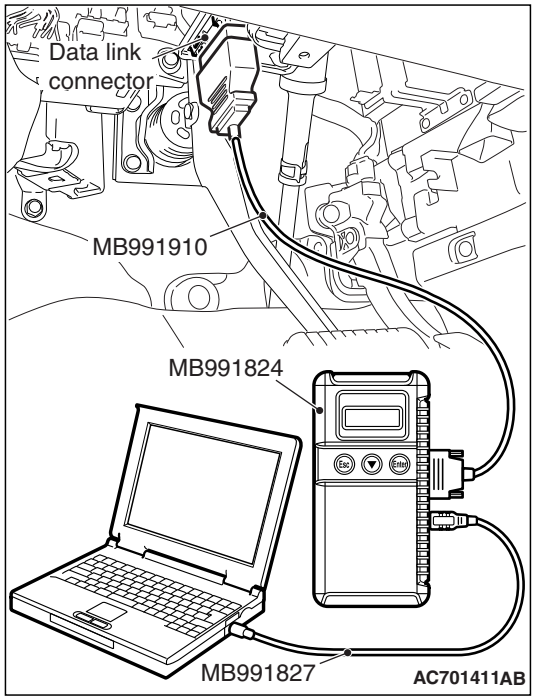

STEP 1. Using scan tool MB991958, diagnose the CAN bus line.

⚠ CAUTION

To prevent damage to scan tool MB991958, always turn the ignition switch to the "LOCK" (OFF) position before connecting or disconnecting scan tool MB991958.

(1) Connect scan tool MB991958. Refer to "How to connect the Scan Tool (M.U.T.-III) P.52B-28."
(2) Turn the ignition switch to the "ON" position.
(3) Diagnose the CAN bus line.
(4) Turn the ignition switch to the "LOCK" (OFF) position.

Q: Is the CAN bus line found to be normal?

YES : Check and repair the power supply circuit system (Refer to P.52B-415).

NO : Repair the CAN bus line (Refer to GROUP 54C, Diagnosis P.54C-17).

Inspection procedure 2: Power supply circuit system

IG1 Power Supply Circuit

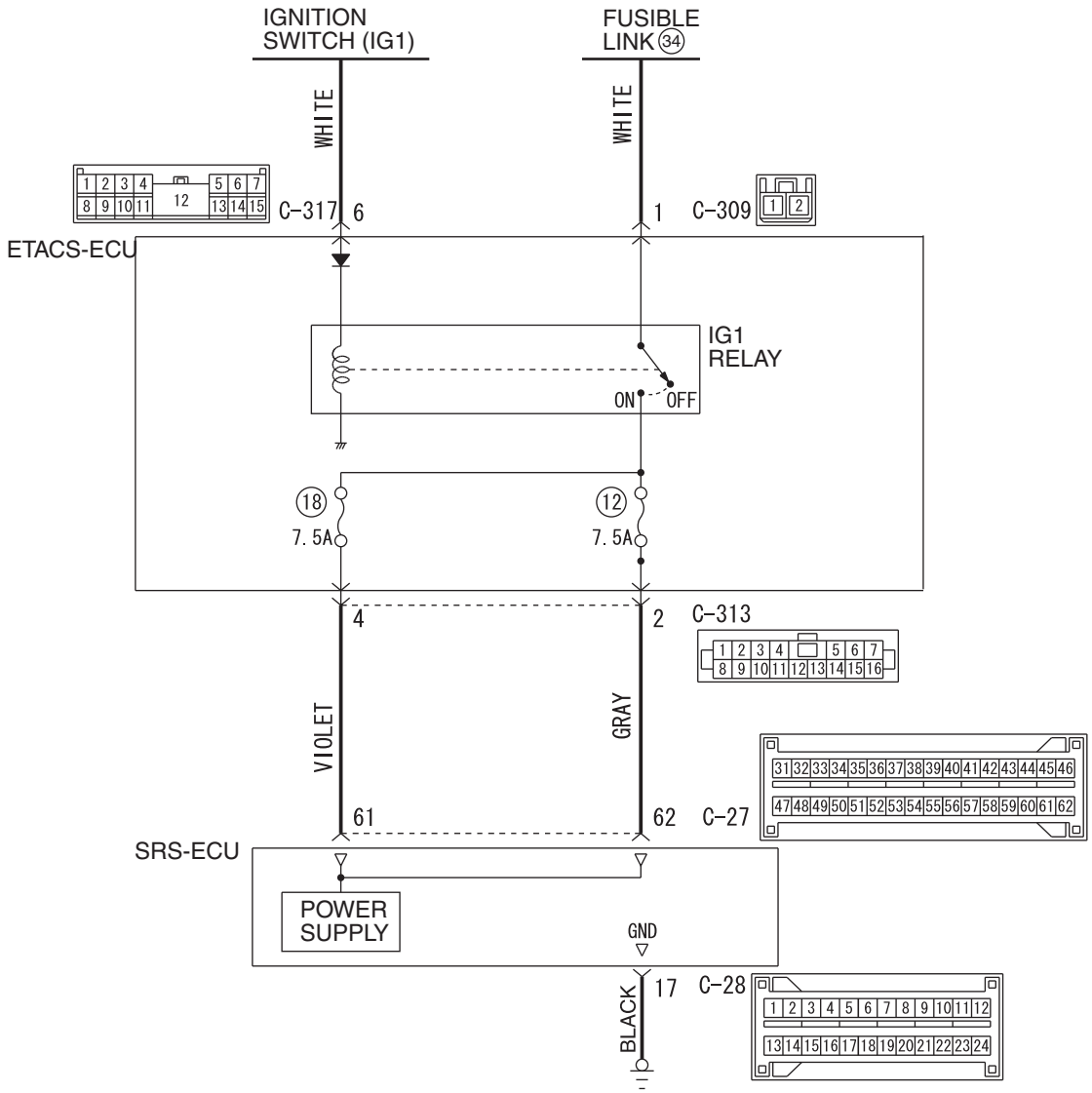

AC803172 AB

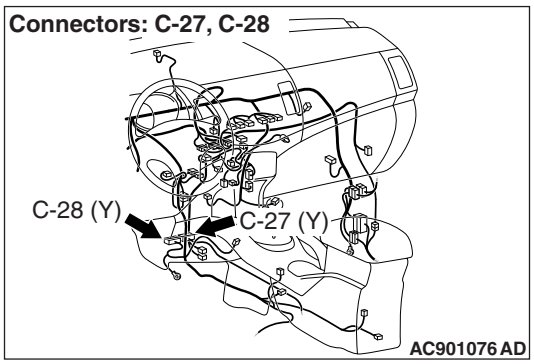

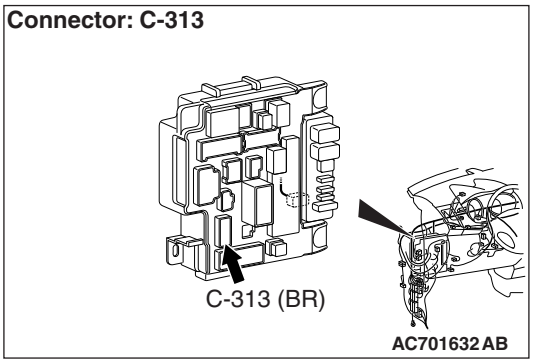

CIRCUIT OPERATION

To SRS-ECU, the power is supplied from two independent circuits (fuse No. 12 and 18) via IG1 relay of ETACS-ECU.
If the power is not supplied to SRS-ECU, the communication between scan tool (M.U.T.-III Sub Assembly) and SRS-ECU cannot be established.

TROUBLESHOOTING HINTS (THE MOST LIKELY CAUSES FOR THIS CASE:)

- Damaged wiring harness or connector
- Charging system failed
- Malfunction of the SRS-ECU
- Malfunction of the ETACS-ECU

DIAGNOSIS

Required Special Tools:

- MB991958: Scan Tool (M.U.T.-III Sub Assembly)
  - MB991824: Vehicle Communication Interface (V.C.I.)
  - MB991827: M.U.T.-III USB Cable
  - MB991910: M.U.T.-III Main Harness A (Vehicles with CAN communication system)

STEP 1. Power supply fuse check.

Q: Is the fuse in good condition?

YES : Go to Step 3.
NO : Go to Step 2

STEP 2. Check for a blown fuse.

(1) Replace the fuse.
(2) Turn the ignition switch to the "ON" position, wait for at least one minute and then turn the switch off.
(3) Check the fuse.

Q: Is the fuse in good condition?

YES : Go to Step 3.
NO : Repair the wiring harness between the C-313 ETACS-ECU connector terminal No. 4/2 and the C-30 SRS-ECU connector terminal No. 61/62, and replace the power supply fuse.

STEP 3. Resistance measurement at the-28 SRS-ECU connectors

(1) While pushing the part "A" indicated in the figure of the harness side connector, turn the lock lever to the direction of the arrow to release the lock lever, and disconnect the C-28 SRS-ECU connectors.

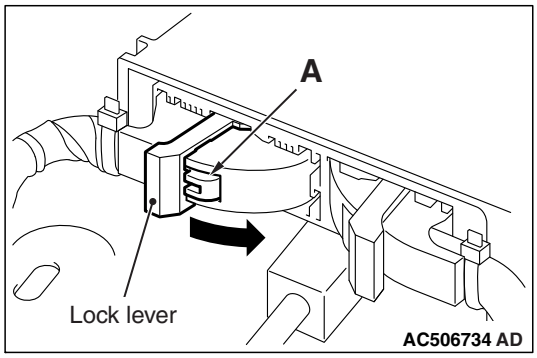

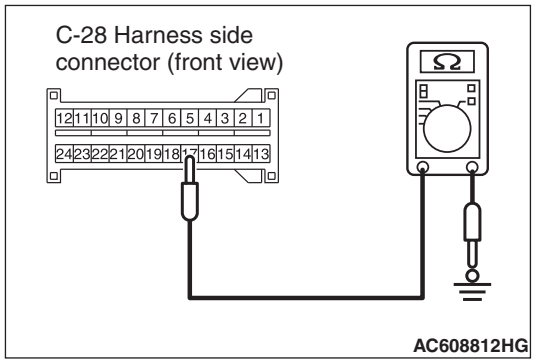

(2) Take the measurements below at the C-28 wiring harness side connectors.
- Continuity between C-28 wiring harness side connector terminal No. 17 and body ground

OK: Continuity (Less than 2 ohms)

Q: Is the check result normal?

YES : Go to Step 4.
NO : Repair the wiring harness between C-28 SRS-ECU connector terminal No. 17 and body ground.

STEP 4. Measure the voltage at the C-27 SRS-ECU connector.

(1) Disconnect the negative battery terminal.
(2) While pushing the part "A" indicated in the figure of the harness side connector, turn the lock lever to the direction of the arrow to release the lock lever, and disconnect the C-27 SRS-ECU connector.
(3) Connect the negative battery terminal.
(4) Ignition switch: ON

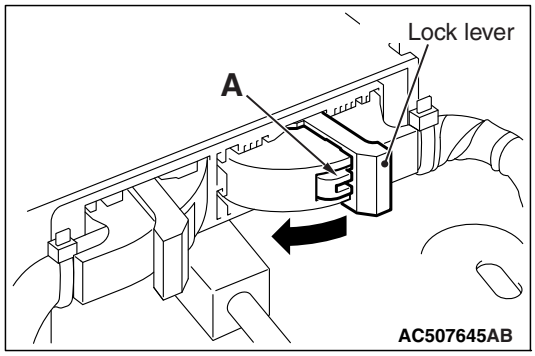

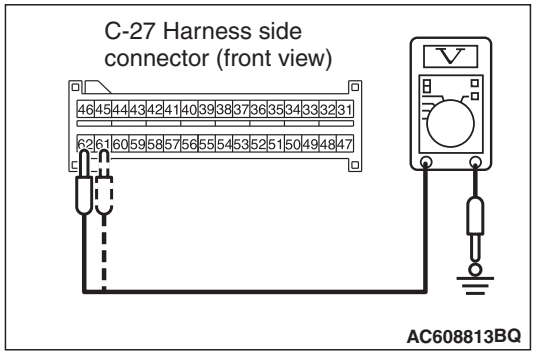

(5) Take the measurements below at the C-27 harness side connector.
- Voltage between terminal No. 61, 62 and body ground

OK: 9 V or more

Q: Is the measured voltage within the specified range?

YES : Go to Step 6.
NO : Go to Step 5.

STEP 5. Check the harness for open circuit between SRS-ECU connector C-27 (terminal No.61 and 62) and the ETACS-ECU connector C-313 (terminal No.4 and 2).

(1) Disconnect the negative battery terminal.

(2) While pushing the part "A" indicated in the figure of the harness side connector, turn the lock lever to the direction of the arrow to release the lock lever, and disconnect the C-27 SRS-ECU connector.

(3) Disconnect the ETACS-ECU connector C-313.

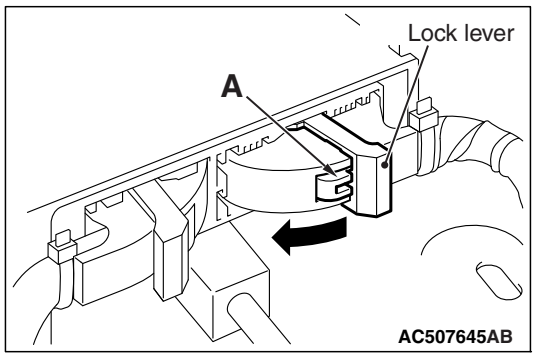

(4) Check for continuity between the following terminals. It should be less than 2 ohms.

<Fuse No.12>

- SRS-ECU connector C-27 (terminal No.62) and the ETACS-ECU connector C-313 (terminal No.2)

<Fuse No.18>

- SRS-ECU connector C-27 (terminal No.61) and the ETACS-ECU connector C-313 (terminal No.4)

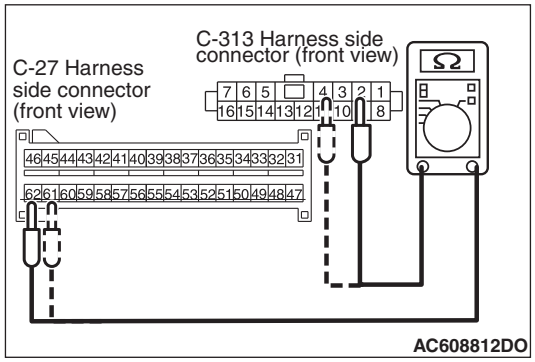

Q: Does continuity exist?

YES : Replace the ETACS-ECU (Refer to GROUP 54A, ETACS-ECU P.54A-841).

NO : Repair the harness wire between SRS-ECU connector C-27 and the ETACS-ECU connector C-313.

STEP 6. Retest the system

Q: Is the communication between scan tool and SRS-ECU possible?

YES : Intermittent malfunction (Refer to GROUP 00, How to Use Troubleshooting/Inspection Service Points –How to Cope with Intermittent Malfunction P.00-15.)

NO : Replace SRS-ECU. (Refer to P.52B-440.)

Inspection procedure 3:The SRS Warning Light does not Illuminate.

SRS Warning Light Circuit

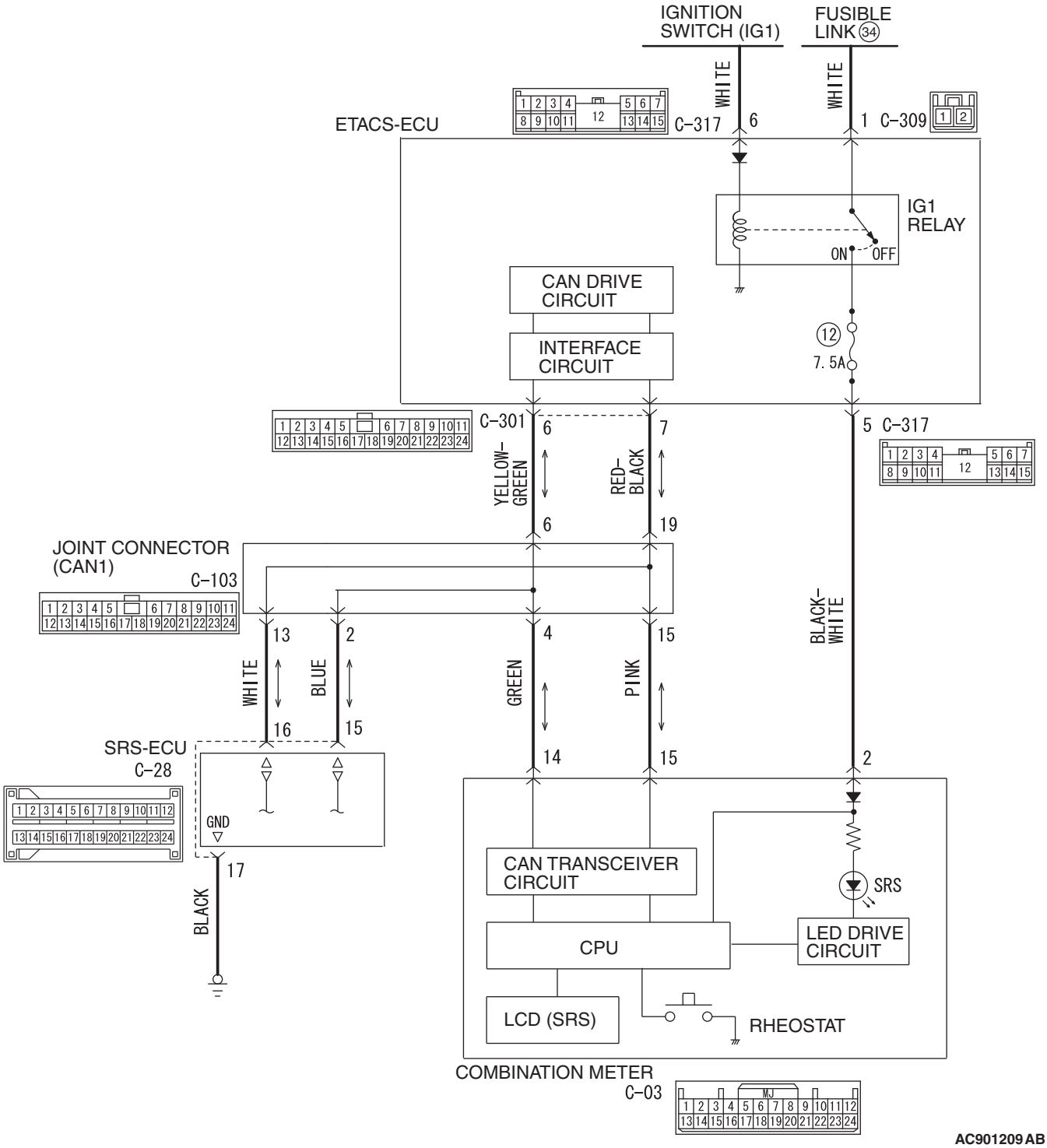

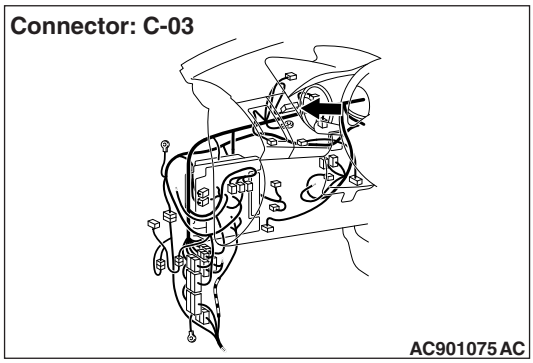

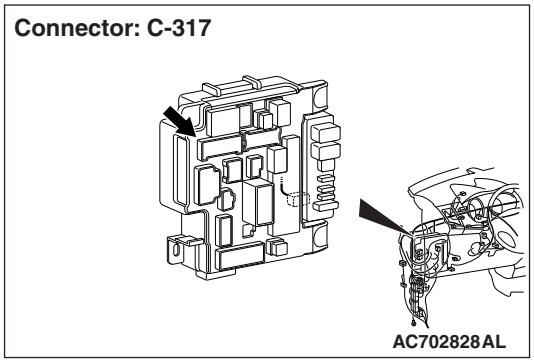

CIRCUIT OPERATION

- The SRS warning light illuminates when the ignition switch is turned to the "ON" position and goes out after approximately seven seconds if there is not a malfunction in the SRS system.
- SRS-ECU sends the SRS warning light signal to the combination meter via the CAN communication.
- As a cause, the failure of CAN bus line, combination meter, or SRS-ECU is suspected.

TROUBLESHOOTING HINTS

- Damaged wiring harness and connectors
- Combination meter malfunction
- Malfunction of SRS-ECU

DIAGNOSIS

Required Special Tools:

- MB991958: Scan Tool (M.U.T.-III Sub Assembly)
  - MB991824: Vehicle Communication Interface (V.C.I.)
  - MB991817: M.U.T.-III USB Cable
  - MB991910: M.U.T.-III Main Harness A (Vehicles with CAN Communication System)

STEP 1. Using scan tool MB991958, diagnose the CAN bus line.

⚠ CAUTION

To prevent damage to scan tool MB991958, always turn the ignition switch to the "LOCK" (OFF) position before connecting or disconnecting scan tool MB991958.

Use scan tool MB991958 to diagnose the CAN bus lines.

(1) Connect scan tool MB991958 to the data link connector.
(2) Turn the ignition switch to the "ON" position.
(3) Diagnose the CAN bus line.

Q: Is the check result satisfactory?

YES : Go to Step 2.
NO : Repair the CAN bus line (Refer to GROUP 54C, Diagnosis P.54C-17).

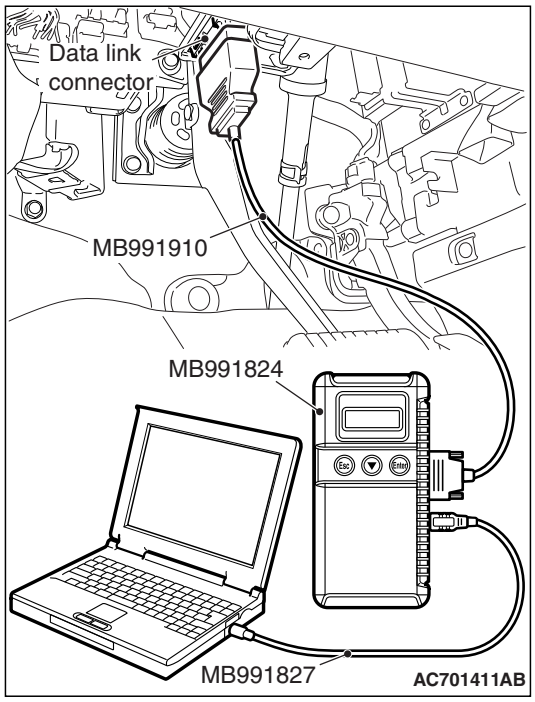

STEP 2. Using scan tool MB991958, check actuator test
Check the SRS-ECU actuator tests.
Item No. 01: SRS warning light

Q: Does the SRS warning light turn on and off normally?

YES : Go to Step 3.
NO : Replace SRS-ECU. (Refer to P.52B-440.)

STEP 3. Using scan tool MB991958, check actuator test
Check the combination meter actuator tests.
Item No. 07: Indicator 1

Q: Does the SRS warning light turn on and off normally?

YES : Go to Step 4.
NO : Replace the combination meter. (Refer to GROUP 54A, Combination Meter P.54A-123.)

STEP 4. Wiring harness inspection between C-317 ETACS-ECU connector terminal No. 5 and C-03 combination meter connector terminal No. 2

NOTE: Prior to the wiring harness inspection, check the ETACS-ECU connectors C-317 and combination meter connector C-03, and repair if necessary.

- The SRS warning light inspection for open and short circuit

Q: Is the check result normal?

YES : If other systems are normally operated, replace the combination meter. (Refer to GROUP 54A, Combination Meter P.54A-123.)
NO : Repair the wiring harness.

Inspection procedure 4: The SRS Warning Light does not Go Out.

CIRCUIT OPERATION

- The SRS warning light illuminates when the ignition switch is turned to the "ON" position and goes out after approximately seven seconds if there is not a malfunction in the SRS system.
- SRS-ECU sends the SRS warning light signal to the combination meter via the CAN communication.
- As a cause, the failure of CAN bus line, combination meter, or SRS-ECU is suspected.

TROUBLESHOOTING HINTS

- Damaged wiring harness and connectors
- Combination meter malfunction
- Malfunction of SRS-ECU

DIAGNOSIS

Required Special Tools:

- MB991958: Scan Tool (M.U.T.-III Sub Assembly)
  - MB991824: Vehicle Communication Interface (V.C.I.)
  - MB991817: M.U.T.-III USB Cable
  - MB991910: M.U.T.-III Main Harness A (Vehicles with CAN Communication System)

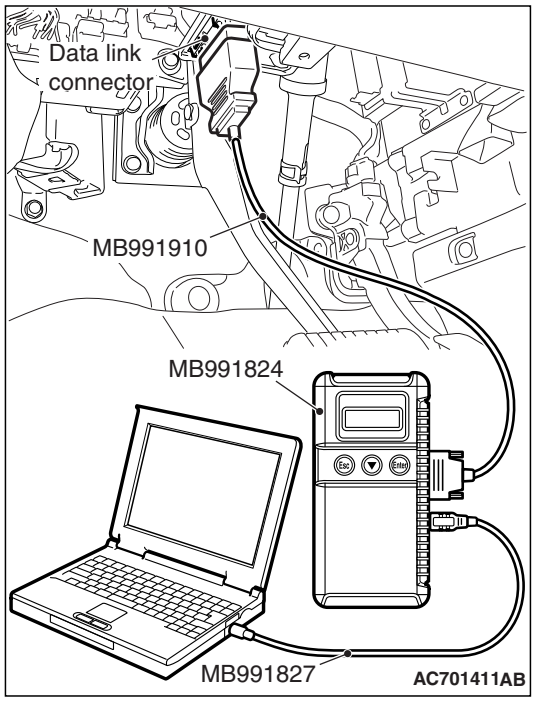

STEP 1. Using scan tool MB991958, diagnose the CAN bus line.

⚠ CAUTION

To prevent damage to scan tool MB991958, always turn the ignition switch to the "LOCK" (OFF) position before connecting or disconnecting scan tool MB991958.

Use scan tool MB991958 to diagnose the CAN bus lines.

(1) Connect scan tool MB991958 to the data link connector.
(2) Turn the ignition switch to the "ON" position.
(3) Diagnose the CAN bus line.

Q: Is the check result satisfactory?

YES : Go to Step 2.
NO : Repair the CAN bus line (Refer to GROUP 54C, Diagnosis P.54C-17).

STEP 2. Recheck of the SRS warning light

(1) Connect the negative battery terminal.
(2) Ignition switch: ON

Q: Does the SRS warning light illuminate for approximately 7 seconds and then go out after the ignition switch is turned to the "ON" position?

YES : There is an intermittent malfunction such as poor engaged connector(s) or open circuit (Refer to GROUP 00, How to Cope with Intermittent Malfunction P.00-15).
NO : Go to Step 3.

STEP 3. Using scan tool MB991958, check actuator test

Check the combination meter actuator tests.
Item No. 07: Indicator 1

Q: Does the SRS warning light turn on and off normally?

YES : Go to Step 4.
NO : Replace the combination meter. (Refer to GROUP 54A, Combination Meter P.54A-123.)

STEP 4. Recheck for diagnostic trouble code.
Check again if the DTC is set.
(1) Erase the DTC.
(2) Turn the ignition switch to the "ON" position.
(3) Check if the DTC is set.
(4) Turn the ignition switch to the "LOCK" (OFF) position.

Q: Is DTC set?
YES : Troubleshoot for the relevant DTC.
NO : Go to Step 5

STEP 5. Recheck of the SRS warning light
(1) Connect the negative battery terminal.
(2) Ignition switch: ON

Q: Does the light stay on?
YES : Replace the SRS-ECU (Refer to P.52B-440).
NO : The procedure is complete.

DATA LIST REFERENCE TABLE

M1524003500414

DATA LIST OUTPUT

The following items can be read by the scan tool from the SRS-ECU input data.

Item No.	Check items	Check conditions	Normal conditions
01	SRS warning light illumination request	• Ignition switch: ON • After warning lamp pre-check	OFF
		• Ignition switch: ON • During warning lamp pre-check	ON
02	Pass. SRS light "ON" request	• Ignition switch: ON • After warning light pre-check	OFF
		• Ignition switch: ON • During warning light pre-check	ON
04	Passenger's seatbelt switch	• Ignition switch: ON • After warning light pre-check • Wear the passenger seatbelt.	Fastened
		• Ignition switch: ON • After warning light pre-check • Undo the passenger seatbelt.	Unfastened
05	Passenger seat airbag ignition	• Ignition switch: ON • After warning light pre-check • Apply a load to the passenger seat.	Permission
		• Ignition switch: ON • After warning light pre-check • Undo a load from a passenger seat.	Prohibition

The following items can be read by the scan tool from the occupant classification-ECU input data.

Item No.	Display on scan tool	Check conditions	Normal conditions
01	Passenger weight	Apply a load to the passenger seat.	–2048 Kg (4515 lb) to 2048 Kg (4515 lb)
02	Dr seat position sensor current	Slide the seat the back-end to the front-position.	0 to 1,700 mA
03	Dr seat position sensor voltage	Slide the seat the back-end to the front-position.	0 to 5,000 mV
07	Dr seat position sensor status	Slide the seat the back-end to the front-position.	Not Frontal Zone/Frontal Zone/Undetermined/No Dr STPS/No Pa STPS/Seat sensor DTC
08	occupant classification status	Apply a load to the passenger seat.	Empty/RFIS*/Child/More 5th%/Less 5th%/Undermined
10	Battery voltage	Always	6.5 to 16 V
21	Pa seat weight sensor 1 RR	Apply a load to the passenger seat.	–2048 Kg (4515 lb) to 2048 Kg (4515 lb)
22	Pa seat weight sensor 1 RR volt	Apply a load to the passenger seat.	0 to 5,000 mV
23	Pa seat weight sensor 2 RF	Apply a load to the passenger seat.	–2048 Kg (4515 lb) to 2048 Kg (4515 lb)
24	Pa seat weight sensor 2 RF volt	Apply a load to the passenger seat.	0 to 5,000 mV
25	Pa seat weight sensor 3 LF	Apply a load to the passenger seat.	–2048 Kg (4515 lb) to 2048 Kg (4515 lb)
26	Pa seat weight sensor 3 LF volt	Apply a load to the passenger seat.	0 to 5,000 mV
27	Pa seat weight sensor 4 LR	Apply a load to the passenger seat.	–2048 Kg (4515 lb) to 2048 Kg (4515 lb)
28	Pa seat weight sensor 4 LR volt	Apply a load to the passenger seat.	0 to 5,000 mV
30	VIN Information	Always	–

*NOTE: *: Radio Frequency Integrated Circuit*

ACTUATOR TEST REFERENCE TABLE

M1524003600165

The scan tool activates the following actuators for testing.

Item No.	Item name	Test item	Driven component
01	SRS warning light	SRS warning light illumination	ON

FAIL-SAFE FUNCTION REFERENCE TABLE

M1524003700151

If the SRS-ECU determines that the following parts are defective, the SRS-ECU operates the SRS warning light and controls as follows.

- If the seat slide sensor is defective, the SRS-ECU determines that the seat is in its backward position and controls the air bag.
- If the occupant classification sensor or the occupant classification-ECU is defective, the SRS-ECU determines that the occupant classification is class 2 [The occupant classification sensor detects 30 kg (66 pounds) or more.] and controls the air bag and the passenger's air bag OFF indicator light.

ACCURACY CHECK OF OCCUPANT CLASSIFICATION SENSOR

M1524025800093

The scan tool can be used to perform the next function.

- Zero-Calibration & System Test

SPECIAL TOOLS

M1524000701296

Tool	Tool number and name	Supersession	Application
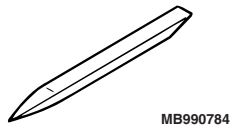 MB990784	MB990784 Ornament remover	General service tool	Removal of cover.
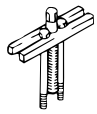 MB990803AE	MB990803 Steering wheel puller	General service tool	Steering wheel removal
a 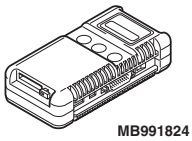 MB991824 b 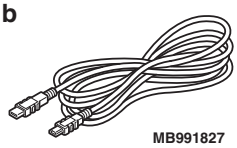 MB991827 c 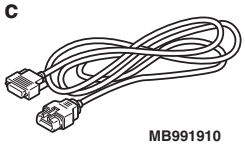 MB991910 d 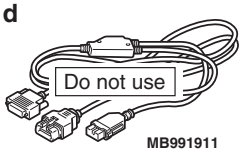 MB991911 e 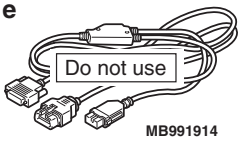 MB991914 f 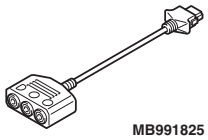 MB991825 g 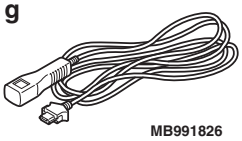 MB991826 MB991958	MB991958 a: MB991824 b: MB991827 c: MB991910 d: MB991911 e: MB991914 f: MB991825 g: MB991826 Scan tool (M.U.T.-III sub assembly) a: Vehicle communication interface (V. C. I.) b: M.U.T.-III USB cable c: M.U.T.-III main harness A (Vehicles with CAN communication system) d: M.U.T.-III main harness B (Vehicles without CAN communication system) e: M.U.T.-III main harness C (for Chrysler models only) f: M.U.T.-III measurement adapter g: M.U.T.-III trigger harness	MB991824-KIT *NOTE: g: MB991826 M.U.T.-III Trigger Harness is not necessary when pushing V.C.I. ENTER key.*	⚠ **CAUTION** **For vehicles with CAN communication, use M.U.T.-III main harness A to send simulated vehicle speed. If you connect M.U.T.-III main harness B instead, the CAN communication does not function correctly.** Checking diagnostic trouble code
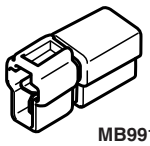 MB991865	MB991865 Dummy resistor		SRS air bag and seat belt pre-tensioner circuit check

Tool	Tool number and name	Supersession	Application
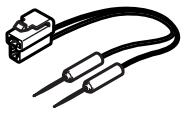 MB991866	MB991866 Resistor harness		Driver's and passenger's (front) air bag and side-air bag circuit check
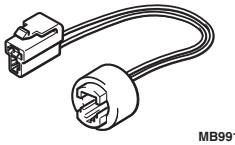 MB991884	MB991884 Resistor harness		Curtain air bag and seat belt pre-tensioner circuit check
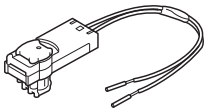 MB991885	MB991885 Adapter harness		Deployment of Knee air bag, curtain air bag and seat belt pre-tensioner inside or outside the vehicle
a b c d 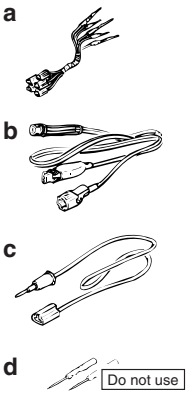 MB991223	MB991223 a: MB991219 b: MB991220 c: MB991221 d: MB991222 Harness set a: Test harness b: LED harness c: LED harness adaptor d: Probe	General service tools	Checking the continuity and measuring the voltage at the SRS-ECU harness connector
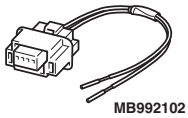 MB992102	MB992102 Air bag inflation adapter harness		Deployment of driver's and passenger's (front) air bag module inside or outside the vehicle
MB992006	MB992006 Extra fine probe	General service tool	Continuity check and voltage measurement at harness wire or connector for loose, corroded or damaged terminals, or terminals pushed back in the connector.

TEST EQUIPMENT

M1524000800513

Tool	Name	Use
AC000019AB	Digital multi-meter Use a multi-meter for which the maximum test current is 2 mA or less at the minimum range of resistance measurement	Checking the SRS electrical circuitry with SRS check harness

POST-COLLISION DIAGNOSIS

M1524001101833

To inspect and service the SRS after a collision (whether or not the air bags have deployed), perform the following steps.

SRS-ECU MEMORY CHECK

Required Special Tool:

- MB991958: Scan Tool (M.U.T.-III Sub Assembly)
  - MB991824:Vehicle Communication Interface (V.C.I.)
  - MB991827:M.U.T.-III USB Cable
  - MB991910:M.U.T.-III Main Harness A (Vehicles with CAN Communication System)

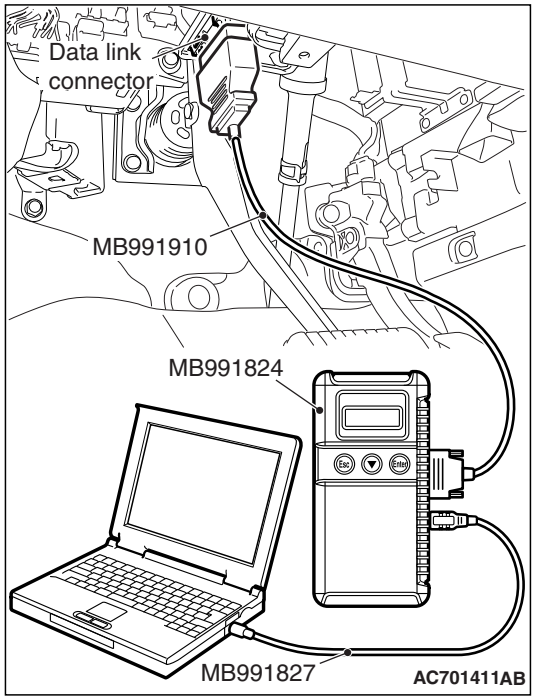

⚠ CAUTION

To prevent damage to scan tool MB991958, always turn the ignition switch to the "LOCK" (OFF) position before connecting or disconnecting scan tool MB991958.

1. Connect scan tool MB991958 to the data link connector (16-pin).
2. Read (and write down) all displayed diagnostic trouble codes (Refer to P.52B-32).

   NOTE: If the battery power supply has been disconnected or disrupted by the collision, scan tool MB991958 cannot communicate with the SRS-ECU. Check the battery, then check and, if necessary, repair the front wiring harness and the instrument panel wiring harness before proceeding.
3. Read the data list (fault duration and how many times memories are erased), using scan tool MB991958 (Refer to P.52B-423).
4. Erase the diagnostic trouble codes, and then turn the ignition switch to the LOCK (OFF) position.
5. Wait for at least one second, and then turn the ignition switch to the ON position again.
6. After waiting 15 seconds or more, note all displayed diagnostic trouble codes (Refer to P.52B-28).

REPAIR PROCEDURE

WHEN FRONT AIR BAGS DEPLOY IN A COLLISION.

1. Replace the following parts with new ones:
   - SRS-ECU (Refer to P.52B-440).
   - Air bag modules (Refer to P.52B-443).
   - Seat belt with pre-tensioner (Refer to P.52B-461).
   - Front impact sensors (Refer to P.52B-437).
   - Front passenger's air bag lid assembly (Refer to GROUP 52A, Instrument Panel Assembly P.52A-2).
   - Front passenger's seat cushion frame assembly (Occupant classification-ECU and weight sensor) (Refer to GROUP 52A, Front Seat Assembly P.52A-19).

2. Check the following parts and replace if there are any malfunctions:
   - Clock spring (Refer to P.52B-443).
   - Driver's seat cushion frame assembly (seat slide sensor) (Refer to GROUP 52A, Front Seat Assembly P.52A-19).
   - Seat belt switch (Refer to GROUP 52A, Front Seat Assembly P.52A-17).
   - Steering wheel, steering column shaft assembly
     (1) Check the wiring harness (built into the steering wheel) and connectors for damage, and terminals for deformation.
     (2) Install the air bag module to check fit and alignment with the steering wheel.
     (3) Check the steering wheel for noise, binding or difficult operation and excessive free play.
     (4) Check the steering column shaft shock absorbing mechanism (Refer to GROUP 37, On-Vehicle Service – Steering Column Shaft Assembly Shock Absorbing Mechanism Check P.37-26).
3. Check the wiring harnesses for binding, the connectors for damage, poor connections, and the terminals for deformation (Refer to P.52B-24).

WHEN SIDE AND CURTAIN AIR BAGS DEPLOY IN A COLLISION.

1. Replace the following parts with new ones:
   - SRS-ECU (Refer to P.52B-440).
   - Side impact sensors (front and rear) (Refer to P.52B-454).
   - Front seatback assembly, front passenger's seat cushion frame assembly (Occupant classification-ECU and weight sensor) (Refer to GROUP 52A, Front Seat Assembly P.52A-19).
   - Curtain air bag module (Refer to P.52B-457).
2. Check the wiring harnesses for binding, the connectors for damage, poor connections, and the terminals for deformation (Refer to P.52B-24).

WHEN CURTAIN AIR BAGS DEPLOY IN A COLLISION.

1. Replace the following parts with new ones:
   - SRS-ECU (Refer to P.52B-440).
   - Side impact sensors (rear) (Refer to P.52B-454).
   - Front passenger's seat cushion frame assembly (Occupant classification-ECU and weight sensor) (Refer to GROUP 52A, Front Seat Assembly P.52A-19).
   - Curtain air bag module (Refer to P.52B-457).
2. Check the wiring harnesses for binding, the connectors for damage, poor connections, and the terminals for deformation (Refer to P.52B-24).

WHEN CURTAIN AIR BAGS DEPLOY AND SEAT BELT PRE-TENSIONER OPERATE IN A COLLISION.

1. Replace the following parts with new ones:
   - SRS-ECU (Refer to P.52B-440).
   - Side impact sensors (rear) (Refer to P.52B-454).
   - Front passenger's seat cushion frame assembly (Occupant classification-ECU and weight sensor) (Refer to GROUP 52A, Front Seat Assembly P.52A-19).
   - Seat belt with pre-tensioner (Refer to P.52B-461).
2. Check the wiring harnesses for binding, the connectors for damage, poor connections, and the terminals for deformation (Refer to P.52B-24).

WHEN AIR BAGS DO NOT DEPLOY IN LOW-SPEED COLLISION.

Check the SRS components. If the SRS components are showing any visible damage such as dents, cracks, or deformation, replace them with new ones. Concerning parts removed for inspection, replacement with new parts and cautionary points for working, refer to appropriate INDIVIDUAL COMPONENT SERVICE P.52B-434.

FRONT IMPACT SENSOR

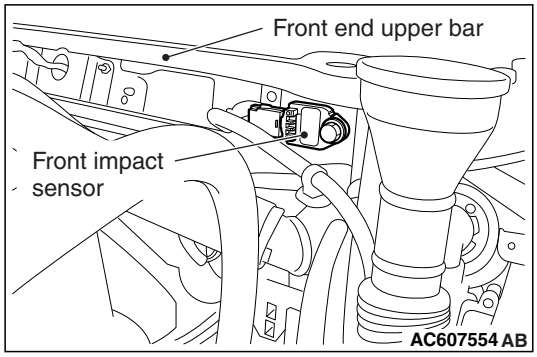

1. Check the front end upper bar for distortion and rust.
2. Check the front impact sensor for dents, cracks, deformation or rust.
3. Check the front impact sensor wiring harness for binding, check the connector for damage, and check the terminals for deformation.

NOTE: The illustration shows the side impact sensor (RH). The position of the side impact sensor (LH) is symmetrical to this.

SRS-ECU

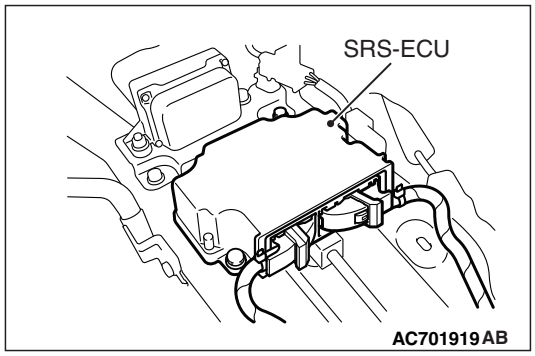

1. Check the SRS-ECU case and brackets for dents, cracks or deformation.
2. Check the connector for damage, and the terminals for deformation.
3. Check the installation of the SRS-ECU and its bracket.

AIR BAG MODULES

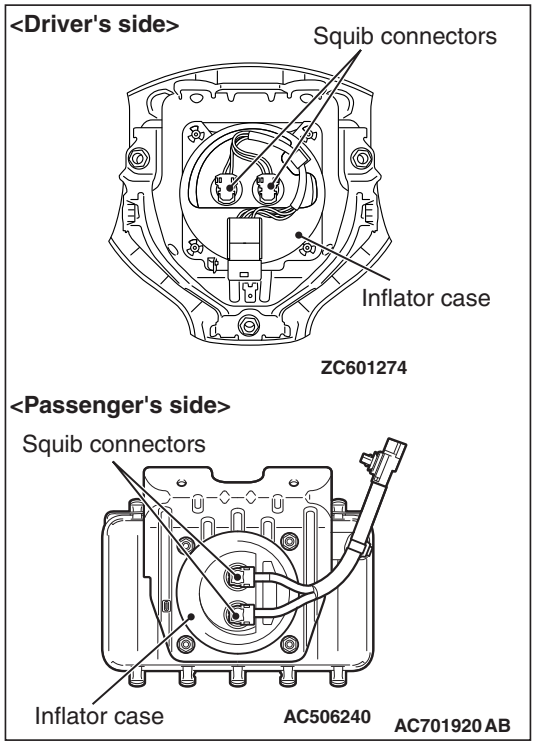

1. Check the pad cover for dents, cracks or deformation.
2. Check the connector for damage, terminal deformities, and the harness for binding.
3. Check the air bag inflator case for dents, cracks or deformities.
4. Install the air bag module (driver's side) to the steering wheel to check installation or alignment with the steering wheel.
5. Install the air bag module (front passenger's side) to the instrument panel and front deck crossmember to check installation or alignment.

FRONT SEATBACK ASSEMBLY (SIDE-AIR BAG MODULE)

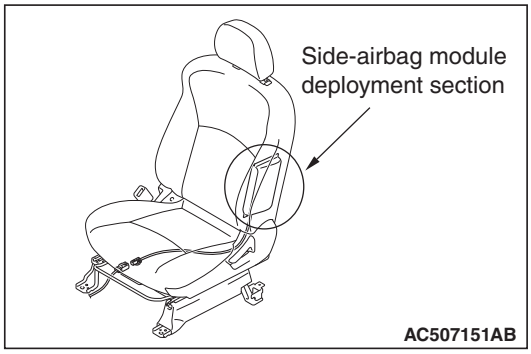

1. Check the air bag module deployment section for dents or deformation.
2. Check that there is no connector damage, bent terminals or harness crimping.

CLOCK SPRING

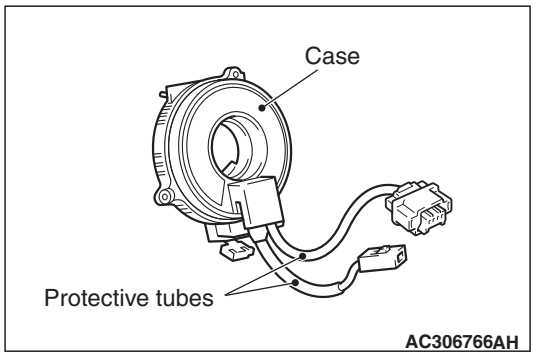

1. Check the clock spring connectors and protective tube for damage, and the terminals for deformation.
2. Visually check the case for damage.

SIDE IMPACT SENSOR

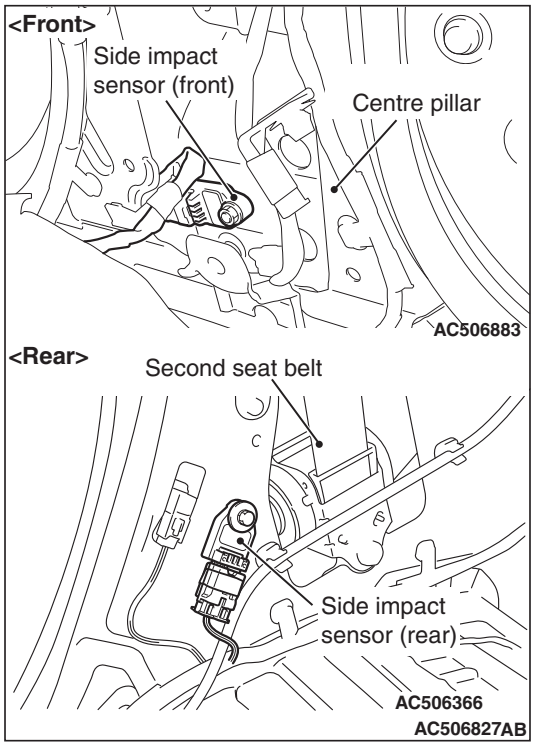

1. Check that there is no bending or corrosion in the center pillar and quarter panel.
2. Check that there is no denting, breakage or bending of the side impact sensor.
3. Check that there is no harness crimping, connector damage or bent terminals.

   NOTE: The illustration shows the side impact sensor (RH). The position of the side impact sensor (LH) is symmetrical to this.

SEAT SLIDE SENSOR

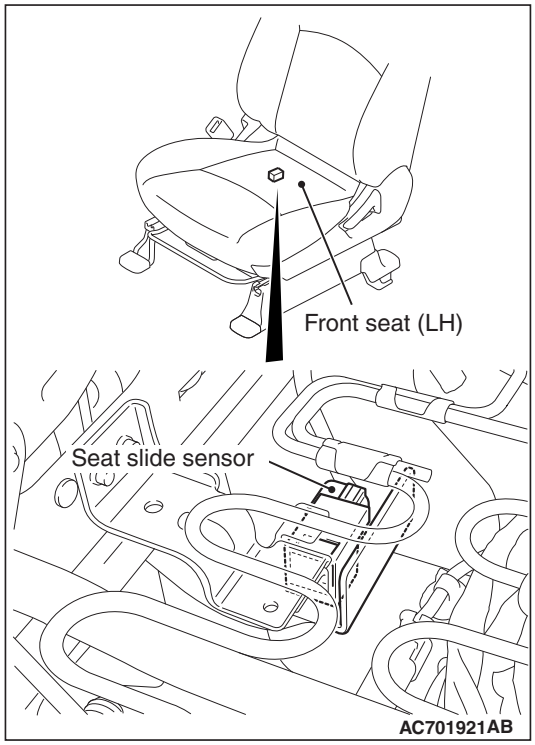

1. Check that there is no connector damage, bent terminals or harness crimping.
2. Check the installation of the seat slide sensor.

OCCUPANT CLASSIFICATION-ECU AND WEIGHT SENSOR

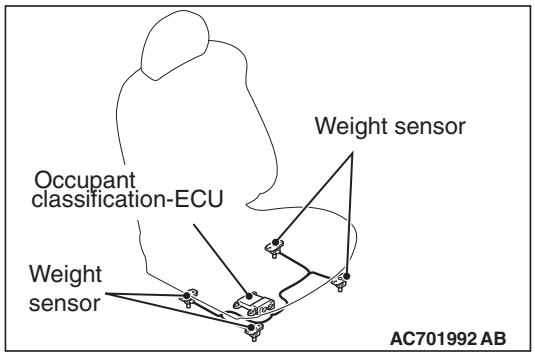

1. Check the occupant classification-ECU case and weight sensor for dents, cracks or deformation.
2. Check the connector for damage, and the terminals for deformation.
3. Check the installation of the occupant classification-ECU and weight sensor.
4. Check the diagnostic trouble code of occupant classification-ECU and replace the seat cushion frame assembly <passenger's side> if DTC B1BA7 is set.

CURTAIN AIR BAG MODULE

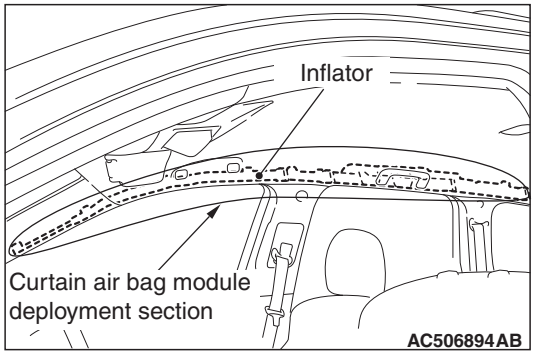

1. Check that the curtain air bag deployment part of the headlining is normal.
2. Check the inflator surface for cracks, dents or deformations.
3. Check the connector for damage, the terminal for deformation, and the harness for binding.

STEERING WHEEL, STEERING COLUMN AND SHAFT ASSEMBLY

1. Check the wiring harness (built into the steering wheel) and the connectors for damage, and the terminals for deformation.
2. Install the air bag module to check fit or alignment with the steering wheel.
3. Check the steering wheel for noise, binding or difficult operation and excessive free play.
4. Check the steering column shaft shock absorbing mechanism (Refer to GROUP 37, On-Vehicle Service – Steering Column Shaft Assembly Shock Absorbing Mechanism Check P.37-26).

SEAT BELT WITH PRE-TENSIONER

1. Check the seat belt for damage or deformation.
2. Check the seat belt with pre-tensioner for cracks or deformation.
3. Check that the unit is installed correctly to the vehicle body.

HARNESS CONNECTOR (FRONT WIRING HARNESS, INSTRUMENT PANEL WIRING HARNESS, AND FLOOR WIRING HARNESS)

Check the harnesses for binding, the connectors for damage, poor connection, and the terminals for deformation (Refer to P.52B-24).

INDIVIDUAL COMPONENT SERVICE

M1524002900765

⚠ WARNING

- ***If heat damage occurs during paint work, remove the SRS-ECU, the air bag modules, the clock spring, front seats, impact sensor and the seat belt with pre-tensioner. Recheck the SRS system operability after reinstalling them.***
  - ***SRS-ECU, air bag module, clock spring, front seats, impact sensor: 93° C (200° F) or more***
  - ***Seat belt with pre-tensioner: 90°C (194° F) or more***
- ***If the SRS components are removed for the purpose of inspection, sheet metal repair, painting, etc., they should be stored in a clean, dry place until they are reinstalled.***

If the SRS components are to be removed or replaced as a result of maintenance, diagnosis, etc., follow the appropriate procedure in this section. (Front impact sensor: refer to P.52B-437, SRS-ECU: refer to P.52B-440, Air bag modules and clock spring: refer to P.52B-443, Side-air bag module: refer to GROUP 52A, Front Seat Assembly P.52A-17, Side impact sensor: refer to P.52B-454, Curtain air bag module: refer to P.52B-457, Seat belt with pre-tensioner: refer to P.52B-461).

ON-VEHICLE SERVICE

ACCURACY CHECK OF OCCUPANT CLASSIFICATION SENSOR

M1524025100146

⚠ CAUTION

The following precaution must be observed when executing accuracy testing and calibration.

- **Perform the occupant classification sensor calibration at room temperature. (Proposal: 20 ±15° C (68 ±27° F)) (Before the calibration, place the occupant classification sensor more than 30 minutes at room temperature.)**
- **Do not apply any load or vibration while the weight check and the calibration is performed.**
- **Perform the weight check and the calibration after seat components are all assembled.**

⚠ CAUTION

To prevent damage to scan tool MB991958, always turn the ignition switch to the "LOCK" (OFF) position before connecting or disconnecting scan tool MB991958.

1. Connect scan tool MB991958 to the data link connector.

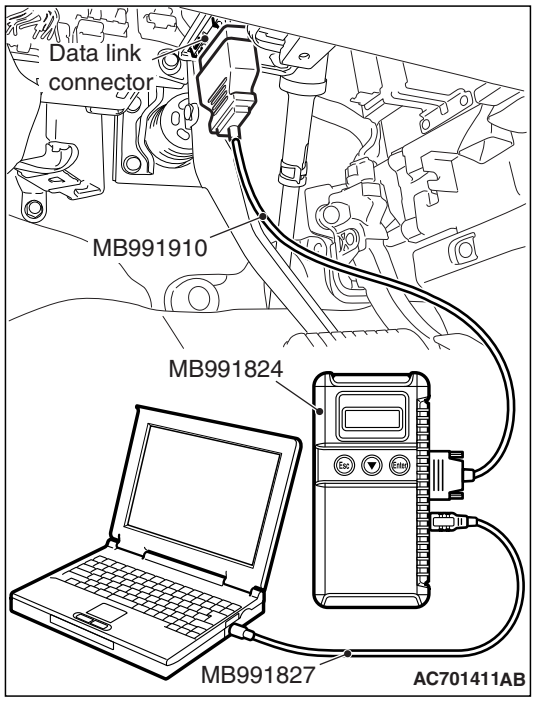

2. To execute accuracy check and calibration, operate scan tool MB991958 (M.U.T.-III Sub Assembly) as follows.
   (1) Select "OCM".
   (2) Select "Special Function".
   (3) Select "Zero Calibration & System Test".
   (4) The start of the zero calibration.

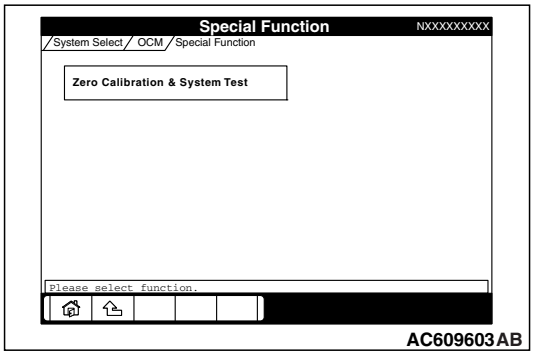

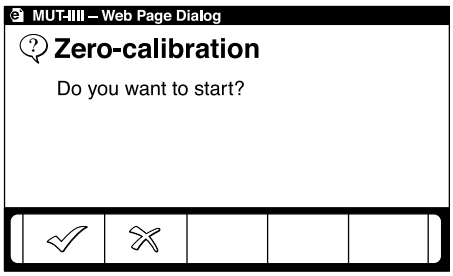

AC609604 AB

(5) The execution check of the zero calibration.
(6) The zero calibration has been completed when the screen as shown in the illustration is displayed. The OK button is pushed and it progresses to the next.

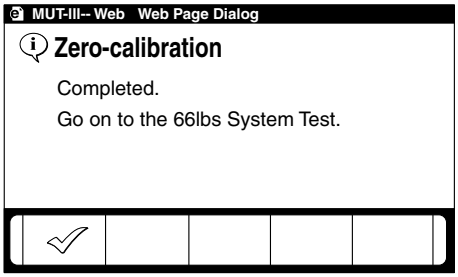

AC710647AB

(7) The start of 66 lbs system test.

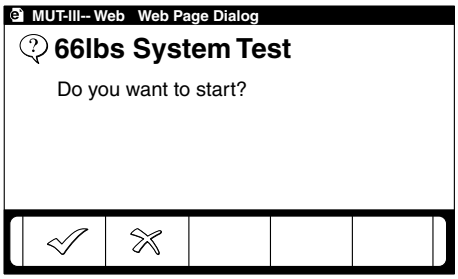

AC710648AB

(8) The execution check of the 66 lbs system test.

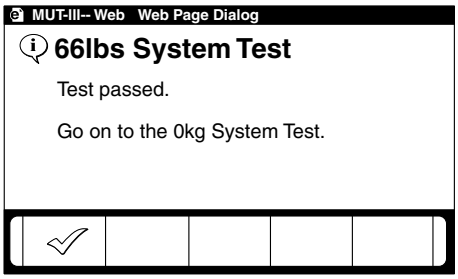

AC710649AB

(9) The 66 lbs system test has been completed when the screen as shown in the illustration is displayed. The OK button is pushed and it progresses to the next.
(10)The start of 0 lbs system test.

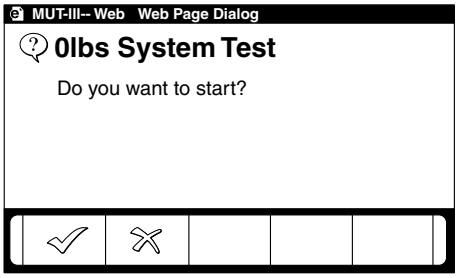

AC710650AB

(11)The execution check of the 0 lbs system test.

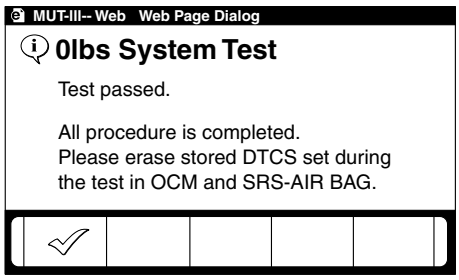

AC710651AB

(12)The 0 lbs system test has been completed when the screen as shown in the illustration is displayed.

FRONT IMPACT SENSORS

REMOVAL AND INSTALLATION

M1524001501615

⚠ WARNING

- ***Never repair or disassemble the front impact sensor. If faulty, replace it.***
- ***Handle the front impact sensors very carefully, taking care not to drop them. They must be replaced if they are dropped.***
- ***Replace the sensors with new ones after the air bag has deployed.***

Pre-removal Operation
- Turn the ignition key to the "LOCK" (OFF) position.

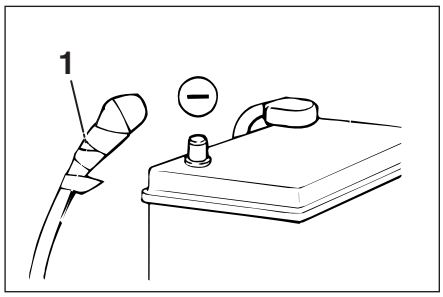

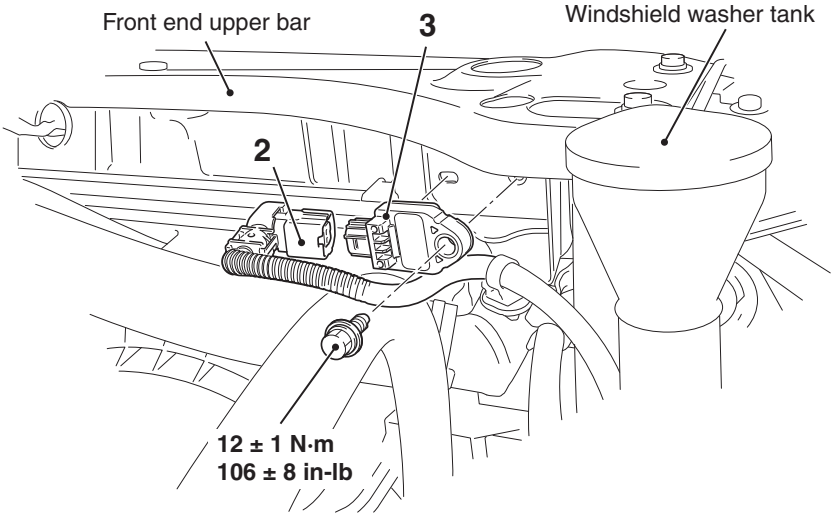

AC701941AC

Removal steps

<<A>> 1. Negative (-) battery cable connection

<<B>> 2. Front impact sensor connector connection

3. Front impact sensor

Installation steps

>>A<< • Pre-installation inspection

>>B<< 3. Front impact sensor

Installation steps (Continued)

2. Front impact sensor connector connection

1. Negative(-) battery cable connection

>>C<< • Post-installation inspection

NOTE: The figure indicates the right front impact sensor. The left impact sensor is symmetrical to this.

REMOVAL SERVICE POINTS

<<A>> NEGATIVE (-) BATTERY CABLE DISCONNECTION

⚠ ***DANGER***

Wait at least 60 seconds after disconnecting the battery cable before doing any further work (Refer to P.52B-24).

⚠ ***WARNING***

Battery posts, terminals and related accessories contain lead and lead compounds. WASH HANDS AFTER HANDLING.

Disconnect the negative (-) battery cable from the battery and tape the terminal to prevent accidental connection and air bag(s) deployment.

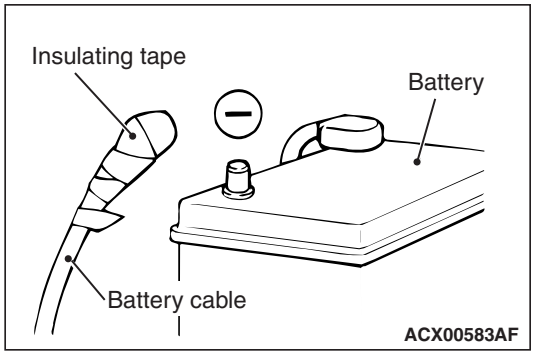

<<B>> FRONT IMPACT SENSOR CONNECTOR REMOVAL

Side the outer housing of the front impact sensor connector in the arrow direction shown, and disconnect the connector.

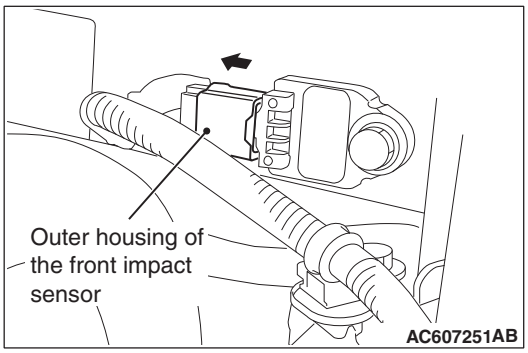

INSTALLATION SERVICE POINTS

>>A<< PRE-INSTALLATION INSPECTION

When installing the new front impact sensor, refer to "INSPECTION."

>>B<< FRONT IMPACT SENSOR INSTALLATION

⚠ WARNING

The SRS may not activate properly if a front impact sensor is not installed properly, which could result in serious injury or death to the vehicle's driver.

1. Securely connect the connector.
2. Position the front impact sensor facing toward the front of the vehicle as indicated by the arrow on the label, and install it securely.

>>C<< POST-INSTALLATION INSPECTION

1. Reconnect the negative (–) battery cable.
2. Turn the ignition key to "ON" position.
3. Does the "SRS" warning light illuminate for approximately seven seconds, and then remain off for at least five seconds after turning "OFF"?
4. If yes, the SRS system is functioning properly.
   If not, consult page P.52B-32.

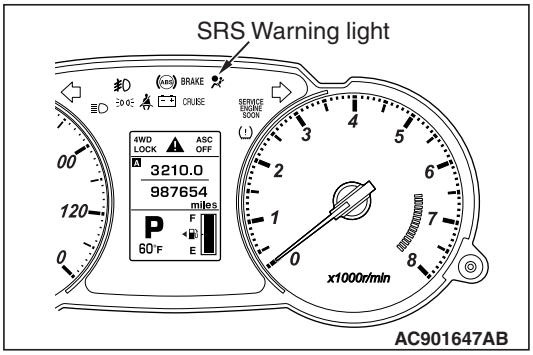

INSPECTION

M1524001600716

⚠ WARNING

If a dent, crack, deformation or rust is detected, replace with a new sensor.

NOTE: For checking of the front impact sensor other than described below, refer to the section concerning SRS diagnosis (Refer to P.52B-32).

1. Check the front impact sensor and bracket for dents, cracks or deformation.
2. Check the connector for damage, and terminals for deformation.
3. Check that there is no bending or corrosion in the radiator support panel.

SRS CONTROL UNIT (SRS-ECU)

REMOVAL AND INSTALLATION

M1524002101610

⚠ DANGER

The SRS-ECU adopts the rollover specification that the curtain air bag and seat belt pre-tensioner operate at the occurrence of rollover. Therefore, do not tilt the vehicle to the right and left with the IG ON or tilt the SRS-ECU to the right and left with the IG ON and the harness installed.

⚠ WARNING

- ***Never attempt to disassemble or repair the SRS-ECU. If faulty, replace it.***
- ***Do not drop or subject the SRS-ECU to impact or vibration. If denting, cracking, deformation, or rust are discovered in the SRS-ECU, replace it with a new SRS-ECU.***
- ***After deployment of an air bag, replace the SRS-ECU with a new one.***
- ***Never use an ohmmeter on or near the SRS-ECU, and use only the special test equipment described here P.52B-427.***

Pre-removal Operation
- Turn the ignition switch to the "LOCK" (OFF) position.

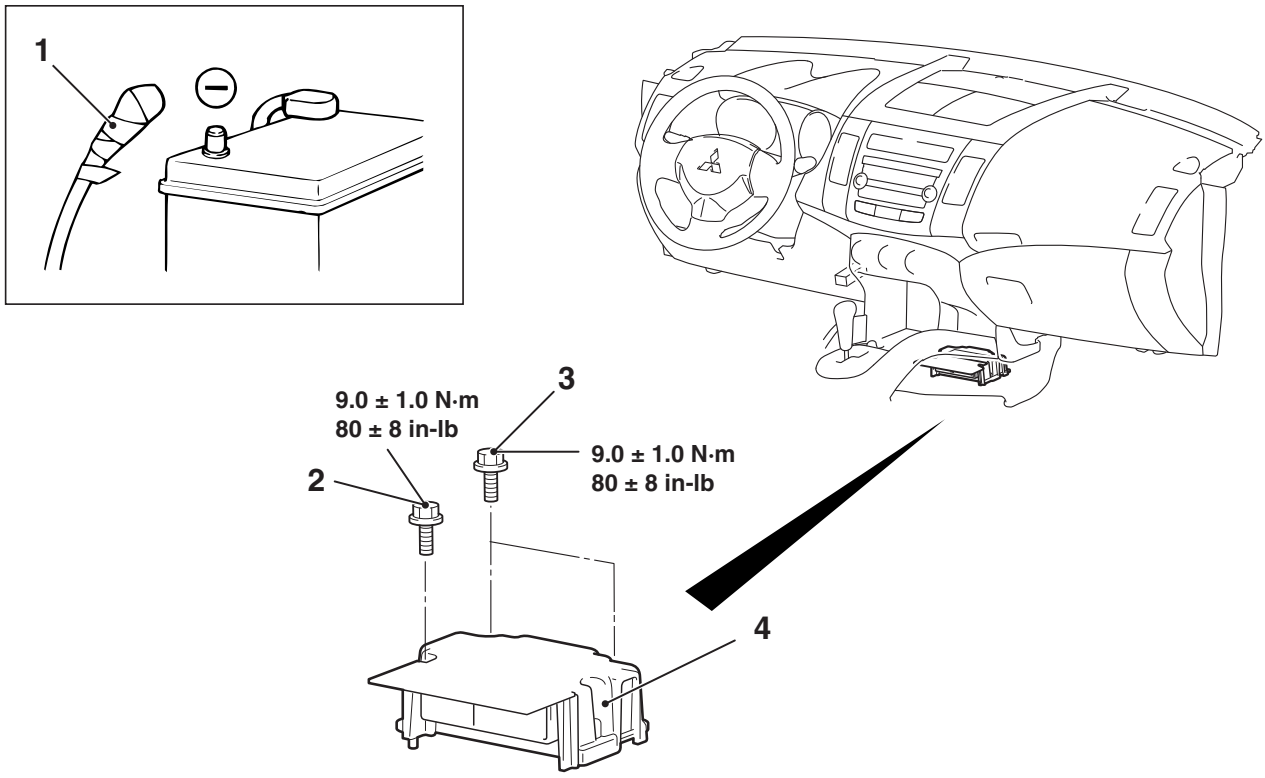

AC701943AC

Removal steps

<<A>>
1. Negative (-) battery cable connection
- Lower side cover (Refer to GROUP 52A –Front Floor Console Assembly P.52A-7).
2. SRS-ECU mounting bolt (ground bolt)
3. SRS-ECU mounting bolt

<<B>>
4. SRS-ECU

Installation steps

>>A<<
4. SRS-ECU
3. SRS-ECU mounting bolt

>>B<<
2. SRS-ECU mounting bolt (ground bolt)
- Lower side cover (Refer to GROUP 52A –Front Floor Console Assembly P.52A-7).
1. Negative (-) battery cable connection

>>C<<
- Post-installation inspection

TSB Revision

REMOVAL SERVICE POINTS

<<A>> NEGATIVE (-) BATTERY CABLE DISCONNECTION

⚠ ***DANGER***

Wait at least 60 seconds after disconnecting the battery cable before doing any further work (Refer to P.52B-24).

⚠ ***WARNING***

Battery posts, terminals and related accessories contain lead and lead compounds. WASH HANDS AFTER HANDLING.

Disconnect the negative battery cable from the battery and tape the terminal to prevent accidental connection and deployment.

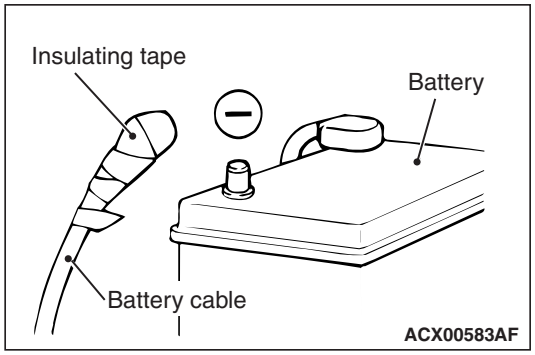

<<B>> SRS-ECU REMOVAL

⚠ ***DANGER***

The SRS-ECU adopts the rollover specification that the curtain air bag and seat belt pre-tensioner operate at the occurrence of rollover. Therefore, do not tilt the vehicle to the right and left with the IG ON or tilt the SRS-ECU to the right and left with the IG ON and the harness installed.

While pushing the part "A" indicated in the figure of the harness side connector, turn the lock lever to the direction of the arrow to release the lock lever.

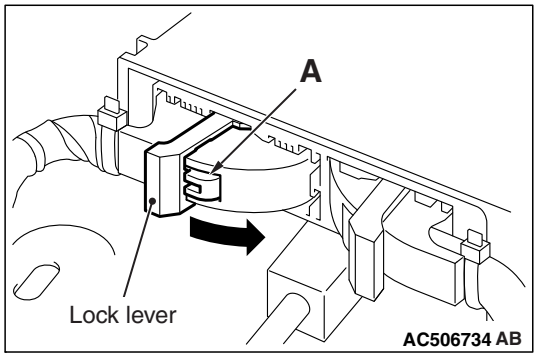

INSTALLATION SERVICE POINTS

>>A << SRS-ECU INSTALLATION

⚠ WARNING

The SRS may not activate if the SRS-ECU is not installed properly, which could result in serious injury or death to the vehicle's driver or front passenger.

>>B<< SRS-ECU MOUNTING BOLT (GROUND BOLT) INSTALLATION

Check the head mark "E" and install the ground bolt.

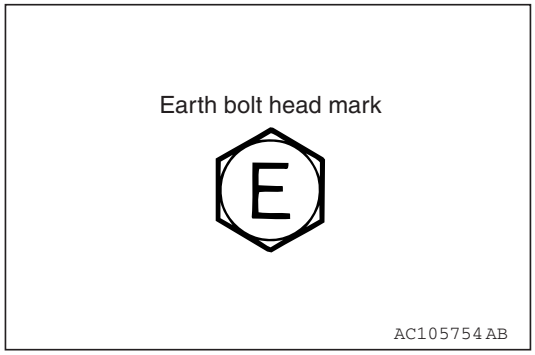

>>C<< POST-INSTALLATION INSPECTION

1. Reconnect the negative (-) battery cable.
2. Turn the ignition switch to the "ON" position.
3. Does the "SRS" warning light illuminate for approximately seven seconds, and then go out?
4. If yes, the SRS system is functioning properly. If not, refer to P.52B-32.

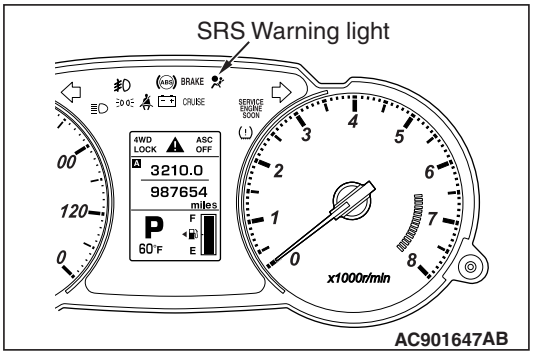

INSPECTION

M1524002200670

⚠ WARNING

If a dent, crack, deformation or rust is discovered, replace the SRS-ECU with a new one.

- Check the SRS-ECU and brackets for dents, cracks or deformation.
- Check the SRS-ECU connector for damage, and the terminals for deformation.

NOTE: Refer to P.52B-32 for inspection of SRS-ECU for other than physical damage.

AIR BAG MODULES AND CLOCK SPRING

REMOVAL AND INSTALLATION

M1524002401246

⚠ ***WARNING***

- ***Never attempt to disassemble or repair the air bag modules or clock spring. If faulty, replace it.***
- ***Do not drop the air bag modules or clock spring or allow contact with water, grease or oil. Replace it if a dent, crack, deformation or rust is detected.***
- ***The air bag modules should be stored on a flat surface with the pad cover facing upward. Do not place anything on top of it.***
- ***Do not expose the air bag modules to temperatures over 93°C (200°F).***
- ***After the air bag deployment, replace the air bag module with a new one. Also, check the clock spring, and replace with a new part if there is an abnormality.***
- ***Wear gloves and safety glasses when handling air bags that have already deployed.***
- ***Certain components of this vehicle, such as air bag modules, may contain perchlorate materials. Special handling may apply. For additional information, see www.dtsc.ca.gov/hazardouswaste/perchlorate.***
- ***An undeployed air bag module should only be disposed of in accordance with the procedures (Refer to P.52B-465).***
- ***When removing and installing the front passenger seat, be sure to carry out accuracy check of the occupant classification sensor after the seat has been installed in the vehicle. (On-Vehicle Service P.52B-435.)***

SIDE-AIR BAG MODULE

For removal and installation of the front seatback assembly with side-air bag module, refer to GROUP 52A, Front Seat P.52A-17.

DRIVER'S AIR BAG MODULE AND CLOCK SPRING

⚠ CAUTION

On vehicles with ASC, always carry out steering wheel sensor calibration after the clock spring has been installed (Refer to GROUP 35C, On-vehicle Service-Steering Wheel Sensor Calibration P.35C-286). This is necessary because the ASC-ECU should update the steering neutral point.

Pre-removal operation
- Check that the front wheels are at the straight-ahead position.

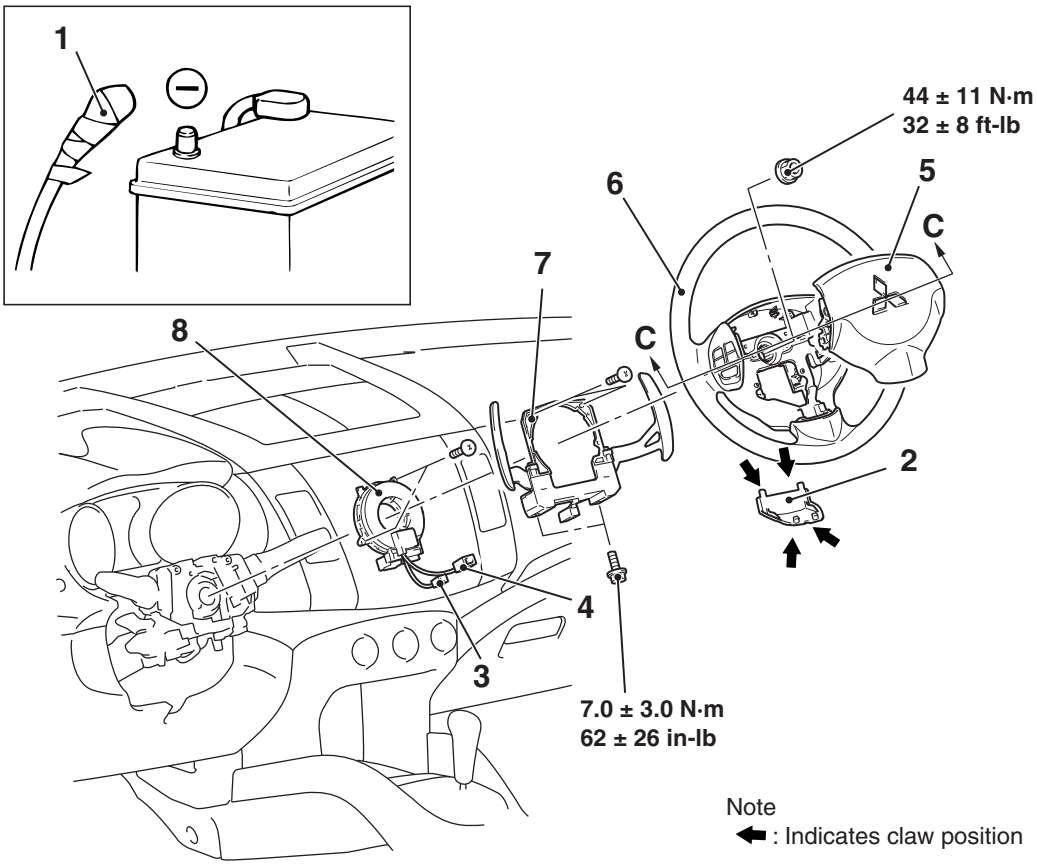

Note
⬅ : Indicates claw position

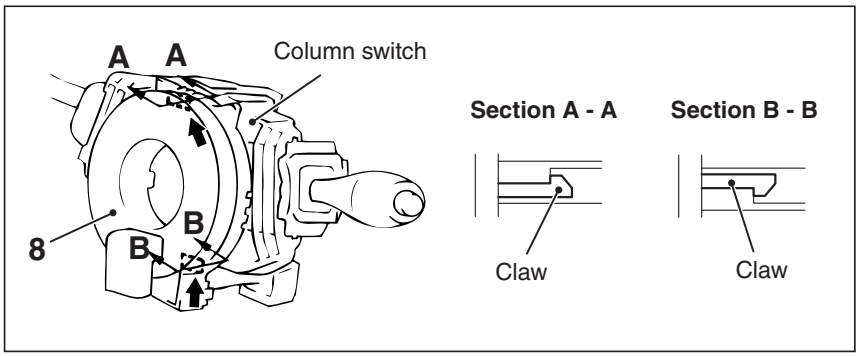

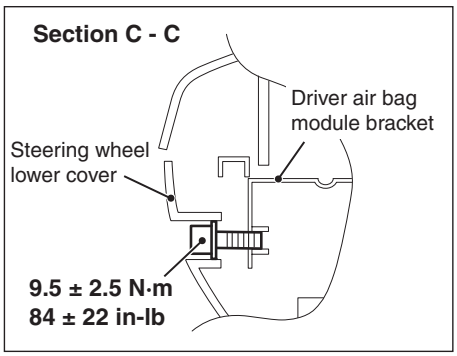

AC901070AB

Driver's air bag module removal steps

<<A>> 1. Negative (-) battery cable connection

<<B>> 2. Cover
3. Horn connector connection

Driver's air bag module removal steps (Continued)

<<C>> 4. Driver's air bag module connector connection

<<D>> 5. Driver's air bag module

TSB Revision

Driver's air bag module installation steps

>>A<< • Pre-installation inspection
>>C<< 5. Driver's air bag module
>>D<< 4. Driver's air bag module connector connection
>>D<< 3. Horn connector connection
2. Cover
1. Negative (-) battery cable connection
>>E<< • Post-installation inspection

Clock spring removal steps

<<A>> 1. Negative (-) battery cable connection
<<B>> 2. Cover
3. Horn connector connection
<<C>> 4. Driver's air bag module connector connection
<<D>> 5. Driver's air bag module
<<E>> 6. Steering wheel assembly
• Lower, upper column cover
7. Paddle shift assembly <vehicles with paddle shift>
<<F>> 8. Clock spring

Clock spring installation steps

>>A<< Pre-installation inspection
>>B<< 8. Clock spring
• Lower, upper column cover
7. Paddle shift assembly <vehicles with paddle shift>
>>C<< 6. Steering wheel assembly
>>C<< 5. Driver's air bag module
>>D<< 4. Driver's air bag module connector connection
>>D<< 3. Horn connector connection
2. Cover
1. Negative (-) battery cable connection
>>E<< • Post-installation inspection
• Steering wheel sensor calibration (Refer to GROUP 35C, On-vehicle Service –Steering Wheel Sensor Calibration P.35C-286.)

Required Special Tools:

- MB991958: Scan Tool (M.U.T.-III Sub Assembly)
  - MB991824:Vehicle Communication Interface(V.C.I.)
  - MB991827:M.U.T.-III USB Cable
  - MB991910:M.U.T.-III Main Harness A
- MB992006: Extra Fine Probe
- MB990803: Steering Wheel Puller

PASSENGER'S (FRONT) AIR BAG MODULE

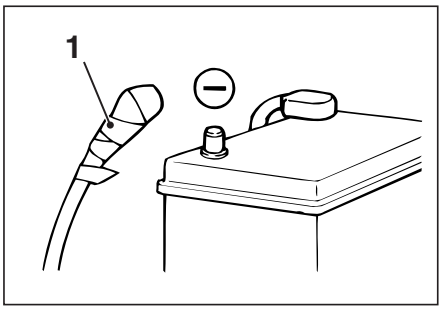

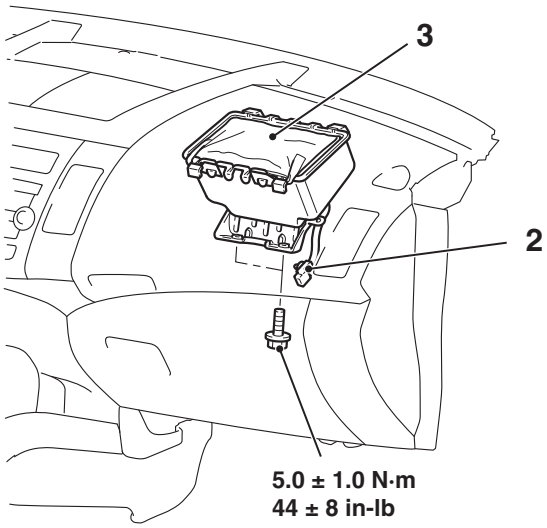

AC701945 AC

Passenger's (front) air bag module removal steps

<<A>> 1. Negative (-) battery cable connection
<<G>> 2. Passenger's (front) air bag module connector

Passenger's (front) air bag module removal steps

• Instrument panel assembly (Refer to GROUP 52A, Instrument Panel Assembly P.52A-2.)
<<H>> 3. Passenger's (front) air bag module

Passenger's (front) Installation steps

>>A<<
- Pre-installation inspection

3. Passenger's (front) air bag module
- Instrument panel assembly (Refer to GROUP 52A, Instrument Panel Assembly P.52A-2.)

2. Passenger's (front) air bag module connector
1. Negative (-) battery connection

>>E<<
- Post-installation inspection

Required Special Tools:
- MB991958: Scan Tool (M.U.T.-III Sub Assembly)
  - MB991824: Vehicle Communication Interface(V.C.I.)
  - MB991827: M.U.T.-III USB Cable
  - MB991910: M.U.T.-III Main Harness A
  - MB992006: Extra Fine Probe

REMOVAL SERVICE POINTS

<<A>> NEGATIVE (-) BATTERY CABLE DISCONNECTION

⚠ ***DANGER***

Wait at least 60 seconds after disconnecting the battery cable before doing any further work. (Refer to P.52B-24).

⚠ ***WARNING***

Battery posts, terminals and related accessories contain lead and lead compounds. WASH HANDS AFTER HANDLING.

Disconnect the negative (-) battery cable from the battery and tape the terminal to prevent accidental connection and air bag(s) deployment.

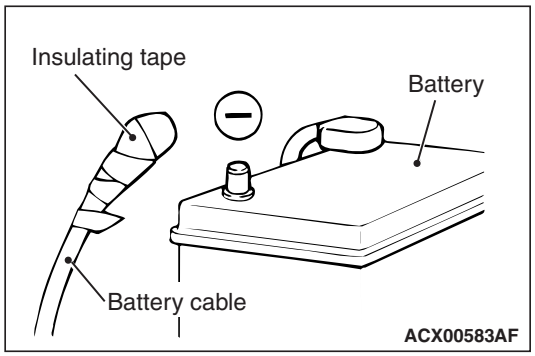

<<B>> COVER REMOVAL

Insert the ornament remover (Special tool: MB990784) into the notch shown in the figure, and remove the cover.

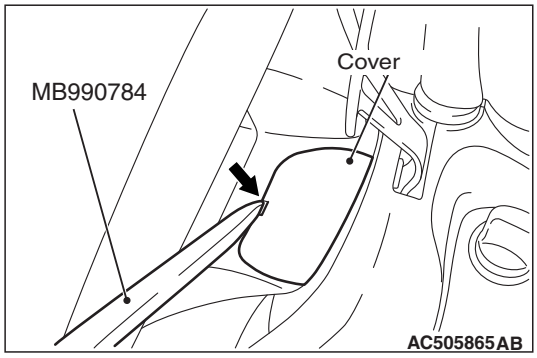

<<C>> DRIVER'S AIR BAG MODULE CONNECTOR REMOVAL

Slide the outer housing of the driver's air bag module connector in the arrow direction shown, and disconnect the connector.

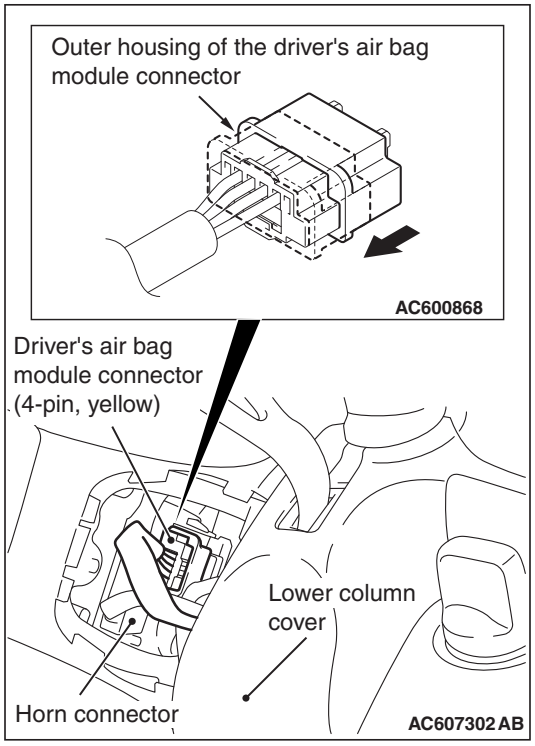

<<D>> DRIVER'S AIR BAG MODULE ASSEMBLY REMOVAL

⚠ WARNING

- ***The air bag module must not be measured with such equipment as an ohmmeter.***
- ***The air bag module must not be disassembled.***
- ***The removed air bag module should be stored in a clean, dry place with the deployment surface facing up.***

1. Using t-type long torx wrench (T30), a torx screw is loosened completely and removed <CANADA, Except vehicles with S-AWC>.
2. Loosen the torx screw and remove the air bag module assembly <Vehicles with S-AWC (Except CANADA)>.

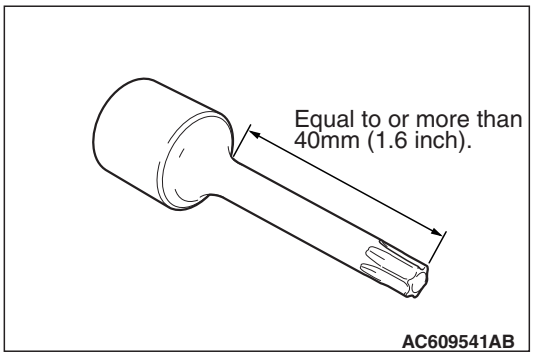

<<E>> STEERING WHEEL ASSEMBLY REMOVAL

Use special tool MB990803 to remove the steering wheel.

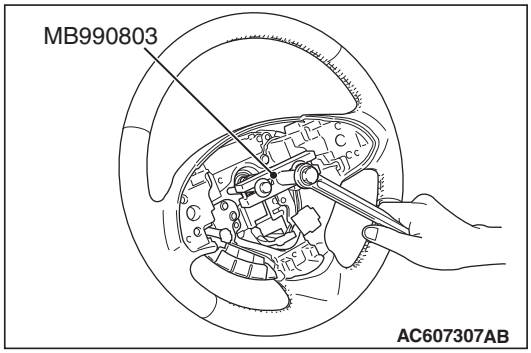

<<F>> CLOCK SPRING REMOVAL

⚠ ***WARNING***

The removed clock spring should be stored in a clean, dry place.

<<G>> PASSENGER'S (FRONT) AIR BAG MODULE CONNECTOR REMOVAL

Slide the outer housing of the passenger’s (front) air bag module connector in the arrow direction shown, and disconnect the connector.

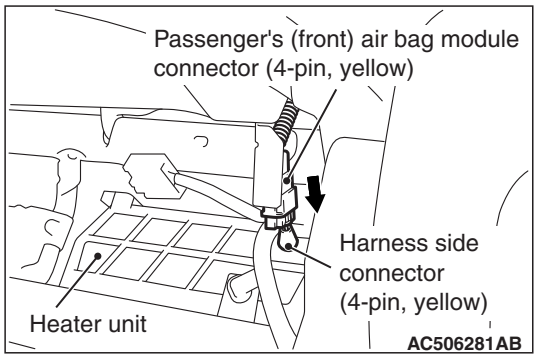

<<H>> PASSENGER'S (FRONT) AIR BAG MODULE REMOVAL

⚠ ***WARNING***

- ***The air bag module must not be measured with such equipment as an ohmmeter.***
- ***The air bag module must not be disassembled.***
- ***The removed air bag module should be stored in a clean, dry place with the deployment surface facing up.***

Insert a slotted (–) screwdriver or similar tool to the location shown in the figure. After disengaging the tabs, remove the front passenger's air bag module.

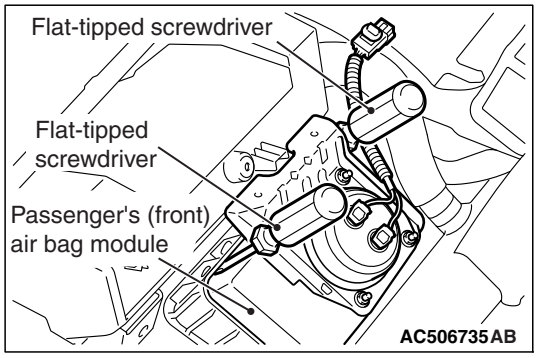

INSTALLATION SERVICE POINTS

>>A<< PRE-INSTALLATION INSPECTION

⚠ WARNING

Dispose of air bag modules only according to the specified procedure (Refer to P.52B-465).

1. When installing the new air bag modules and clock spring, refer to “INSPECTION” (P.52B-451).
2. Connect the negative (-) battery cable.

⚠ CAUTION

To prevent damage to scan tool MB991958, always turn the ignition switch to the "LOCK" (OFF) position before connecting or disconnecting scan tool MB991958.

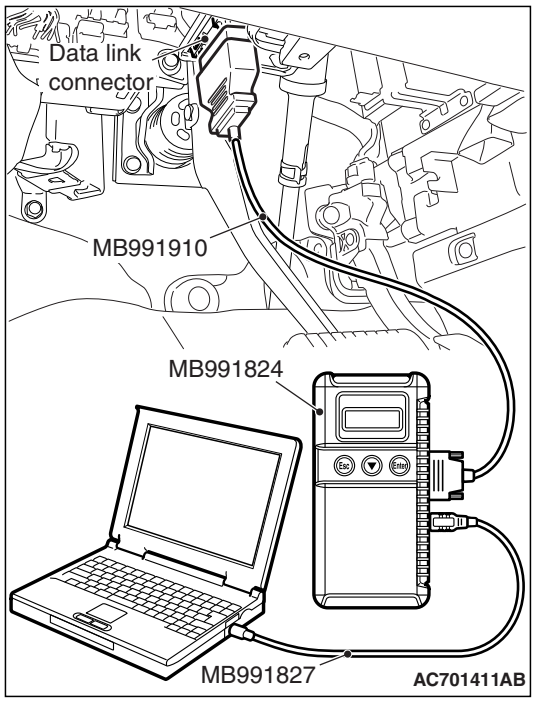

3. Connect scan tool MB991958 to the data link connector.
4. Turn the ignition switch to the “ON” position.
5. Check DTCs using scan tool MB991958 to ensure entire SRS operates properly.
   At this time, check that no DTC except B1B02, B1B06, B1B0A and B1B0E are set.

⚠ DANGER

Wait at least 60 seconds after disconnecting the battery cable before doing any further work. (Refer to P.52B-24).

⚠ WARNING

Battery posts, terminals and related accessories contain lead and lead compounds. WASH HANDS AFTER HANDLING.

6. Turn the ignition switch to the "LOCK" (OFF) position. Disconnect the negative (-) battery cable and tape the terminal to prevent accidental connection and air bags deployment.

>>B<< CLOCK SPRING INSTALLATION

1. Check that the front wheels are at the straight-ahead position.

⚠ CAUTION

- **If the center of the clock spring is not correctly aligned, the steering wheel may not be turned fully or the cable inside the clock spring may be broken, causing the SRS air bag to be inoperative or operated incorrectly.**
- **When aligning the clock spring neutral position mark, perform with the clock spring independently. If performed with the steering wheel sensor installed, the steering wheel sensor may be damaged.**

2. Align the mating marks of the clock spring.
   Alignment of mating marks
   (1) Turn the clock spring clockwise fully.
   (2) Turn the clock spring counterclockwise approximately three and 1/2 turns to align the mating marks.

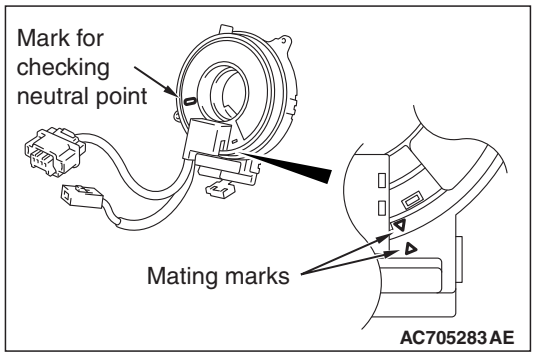

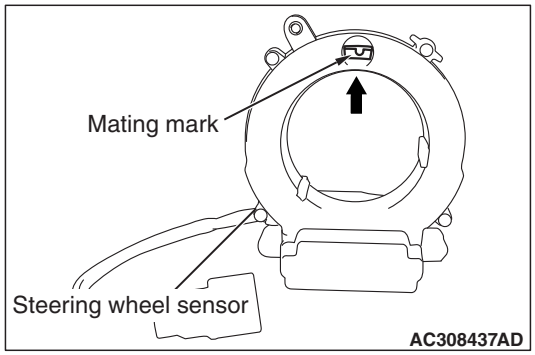

(3) Check that the white roller can be seen from the window for checking the neutral point when the mating marks are aligned.

NOTE: If the white roller cannot be seen or black roller can be seen, the neutral point is not aligned correctly.

(4) Install the clock spring to the column switch.

⚠ CAUTION

Be sure to align the steering wheel sensor neutral position mark. If the neutral position marks are not aligned, the steering wheel operation may damage the steering wheel sensor.

3. Align the steering wheel sensor neutral position mark.
   <Vehicle with ASC>
   <Alignment of mating marks>
   (1) When checking the neutral position check window of the steering wheel sensor, if an arrow can be seen, turn to the direction of the arrow, and align the neutral position mark as shown in the figure.
   (2) Install the steering wheel sensor to the column switch assembly, maintaining the neutral position correctly.
   (3) Install the column switch assembly to the vehicle, maintaining the neutral position correctly.

>>C<< STEERING WHEEL ASSEMBLY/DRIVER'S AIR BAG MODULE ASSEMBLY INSTALLATION

⚠ CAUTION

When installing the steering wheel and air bag module, ensure that the harness of the clock spring does not become caught or tangled.

1. Before installing the steering wheel and air bag module, turn the vehicle's front wheels to the straight-ahead position and align the mating marks of the clock spring.
2. After securing the steering wheel, turn the steering wheel all the way in both directions to confirm that the steering wheel rotation is normal.

>>D<< DRIVER'S AIR BAG MODULE CONNECTOR/HORN CONNECTOR CONNECTION

Connect the connector securely and route the harnesses not to lie off the cover hole.

>>E<< POST-INSTALLATION INSPECTION

1. Reconnect the negative (-) battery cable.
2. Turn the ignition switch to "ON" position.

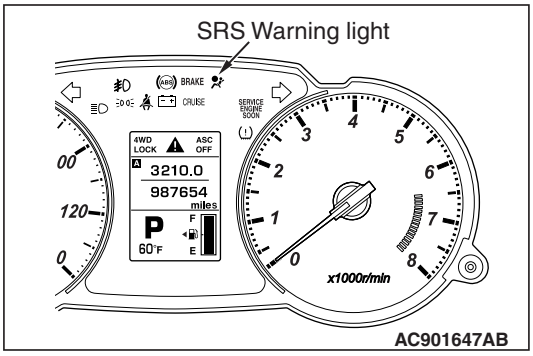

3. Does the "SRS" warning light illuminate for approximately seven seconds, and go out?
4. If yes, the SRS system is functioning properly. If not, refer to P.52B-32.

INSPECTION

M1524002500767

AIR BAG MODULE CHECK

⚠ DANGER

Never attempt to measure the circuit resistance of the air bag modules (squib), even if you are using the specified tester. If the circuit resistance is measured with a tester, accidental air bag deployment will result, and possible serious personal injury.

⚠ WARNING

If any component damage is found during the following inspection, replace the air bag module with a new one. Dispose of the old one according to the specified procedure (Refer to P.52B-465).

1. Check the pad cover for dents, cracks or deformation.
2. Check the connectors for damage, the terminals for deformation, and the harness for binding.
3. Check the air bag inflator case for dents, cracks or deformation.
4. Install the air bag module (driver's side) to the steering wheel and check fit and alignment with the steering wheel.
5. Install the air bag module (front passenger's side) to the instrument panel and front deck crossmember and check fit and alignment.

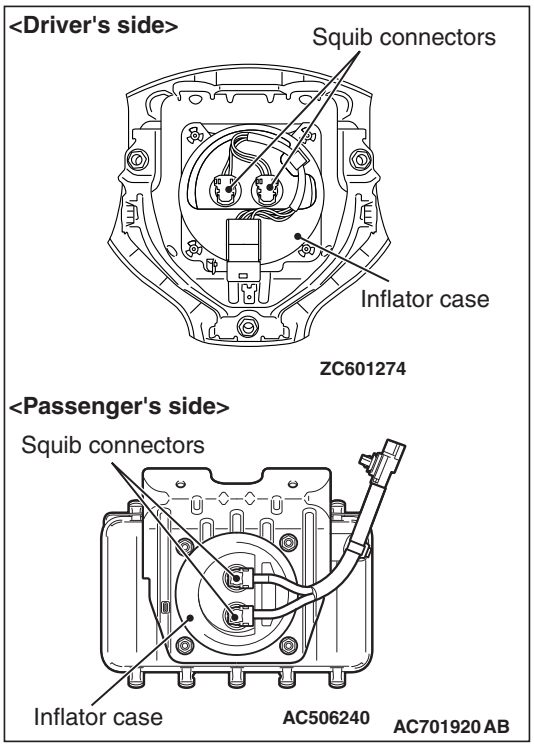

FRONT SEATBACK ASSEMBLY WITH SIDE-AIR BAG MODULE CHECK

⚠ DANGER

Never attempt to measure the circuit resistance of the air bag module (squib), even if you are using the specified tester. If the circuit resistance is measured with a tester, accidental air bag deployment will result, and possible serious personal injury.

⚠ WARNING

If any improper part is found during the following inspection, replace the front seatback assembly with a new one. Dispose of the old one according to the specified procedure (Refer to P.52B-465).

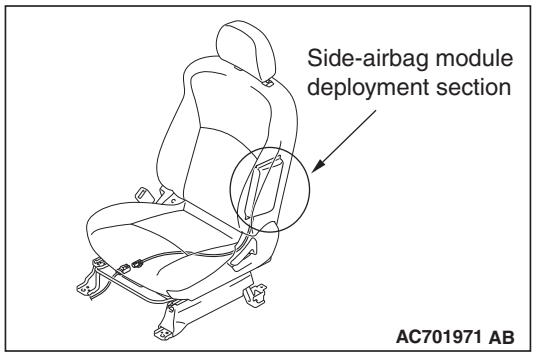

1. Check the air bag module deployment section for dents or deformation.
2. Check the connector for damage, the terminals for deformation, and the harness for binding.

CLOCK SPRING CHECK

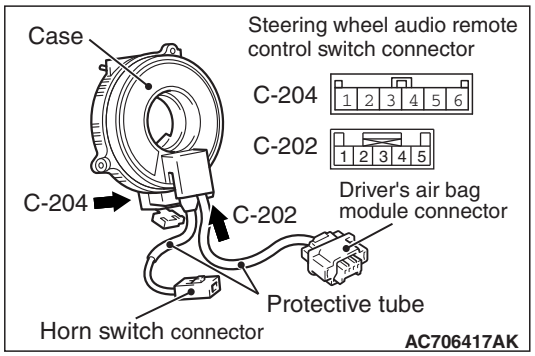

If any malfunction is found in the following inspections, replace the clock spring with a new one.

1. Check the connectors and protective tube for damage, and the terminals for deformation.
2. Visually check the case for damage.
3. Check that the continuity exists between the following connector terminals.
   - C-204 connector terminal 1 and horn switch connector
   - C-204 connector terminal 2 and C-202 connector terminal 5
   - C-204 connector terminal 3 and C-202 connector terminal 4
   - C-204 connector terminal 4 and C-202 connector terminal 3
   - C-204 connector terminal 5 and C-202 connector terminal 2
   - C-204 connector terminal 6 and C-202 connector terminal 1

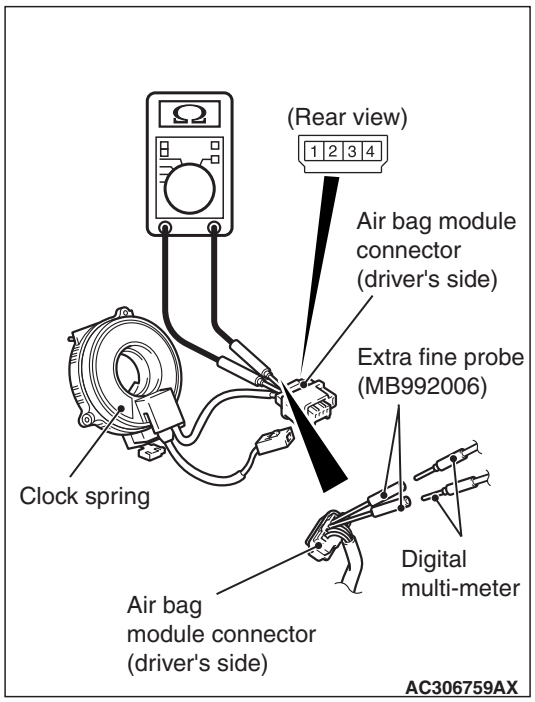

⚠ CAUTION

Do not directly insert a probe, etc. into the terminal from the front of the connector.

4. Insert the special tool (MB992006) from behind the air bag module connector of the C-205 driver's side.
5. Connect the circuit tester to the special tool as shown in the figure, and check the continuity among terminal No. 1 –2 or No. 3 –4.

SIDE IMPACT SENSOR

REMOVAL AND INSTALLATION

M1524004601235

⚠ WARNING

- ***Never attempt to disassemble or repair the side impact sensor. If faulty, replace it.***
- ***Do not drop or subject the side impact sensor to impact or vibration. Replace the side impact sensor, if dents, cracking, deformation, or rust are present.***
- ***Replace the side impact sensor after the side and curtain air bag has deployed.***

Pre-removal Operation
- Turn the ignition key to the "LOCK" (OFF) position.

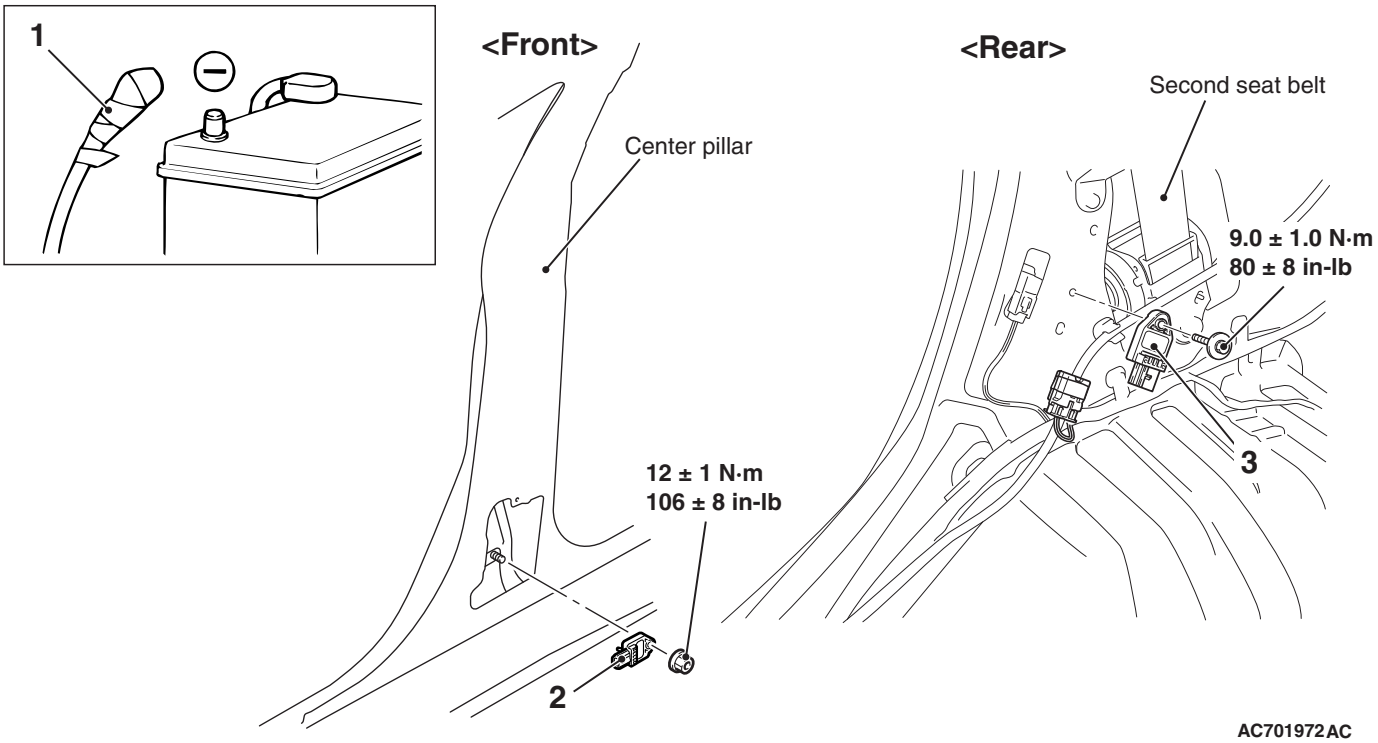

AC701972AC

Side impact sensor (front) removal steps

<<A>> 1. Negative (-) battery cable connection
- Center pillar trim, lower (Refer to GROUP 52A, Interior Trim P.52A-9).
- Seat belt with pre-tensioner (Refer to P.52B-461.)

<<B>>
- Side impact sensor connector connection

2. Side impact sensor (Front)

Side impact sensor (front) installation steps

>>A<<
- Pre-installation inspection

>>B<<
2. Side impact sensor (Front)
- Side impact sensor connector connection
- Seat belt with pre-tensioner (Refer to P.52B-461.)

Side impact sensor (front) installation steps (Continued)
- Center pillar trim, lower (Refer to GROUP 52A, Interior Trim P.52A-9).

1. Negative (-) battery cable connection

>>C<<
- Post-installation inspection

Side impact sensor (Rear) removal steps

<<A>> 1. Negative (-) battery cable connection
- Quarter trim, lower (Refer to GROUP 52A, Interior Trim P.52A-9.)

<<B>>
- Side impact sensor connector connection

3. Side impact sensor (Rear)

TSB Revision

Side impact sensor (Rear) installation steps

>>A<< • Pre-installation inspection

>>B<< 3. Side impact sensor (Rear)
- Side impact sensor connector connection
- Quarter trim, lower (Refer to GROUP 52A, Interior Trim P.52A-9).

1. Negative (-) battery cable connection

>>C<< • Post-installation inspection

NOTE: The illustration above shows the side impact sensor (RH). The position of the side impact sensor (LH) is symmetrical to this.

REMOVAL SERVICE POINTS

<<A>> NEGATIVE (-) BATTERY CABLE DISCONNECTION

⚠ DANGER

Wait at least 60 seconds after disconnecting the battery cable before doing any further work (Refer to P.52B-24).

⚠ WARNING

Battery posts, terminals and related accessories contain lead and lead compounds. WASH HANDS AFTER HANDLING.

Disconnect the negative (-) battery cable from the battery and tape the terminal to prevent accidental connection and air bag deployment.

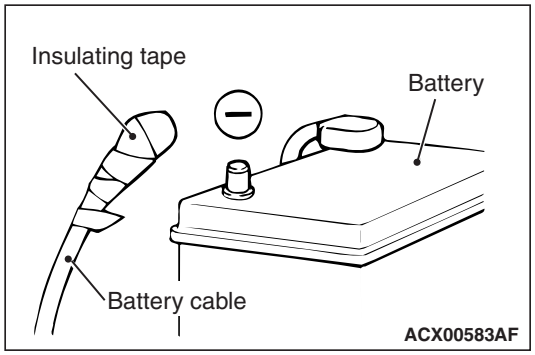

<<B>> IMPACT SENSOR CONNECTOR REMOVAL

Slide the outer housing of the impact sensor connector in the arrow direction shown, and disconnect the connector.

NOTE: The illustration shows the side impact sensor (rear). As for the impact sensor (front), follow the same procedure.

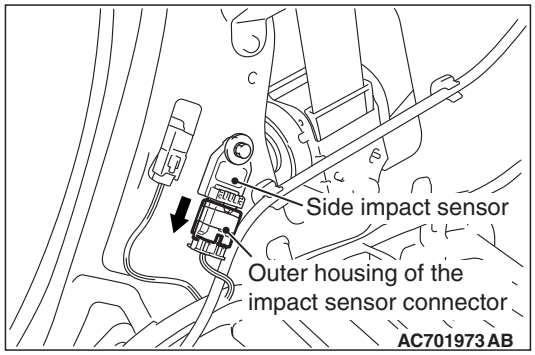

INSTALLATION SERVICE POINTS

>>A<< PRE-INSTALLATION INSPECTION

Check the side impact sensor for dents, breakage and bending and measure the resistance between the terminals, even when installing a new side impact sensor.

>>B <<SIDE IMPACT SENSOR INSTALLATION

⚠ WARNING

If the side impact sensor is not installed securely and correctly, the side-air bag may not operate normally.

Securely connect the connector.

>>C<< POST-INSTALLATION INSPECTION

1. Reconnect the negative (-) battery cable.
2. Turn the ignition switch to the "ON" position.
3. Does the "SRS" warning light illuminate for approximately seven seconds, and go out?
4. If yes, the SRS system is functioning properly. If not, refer to P.52B-32.

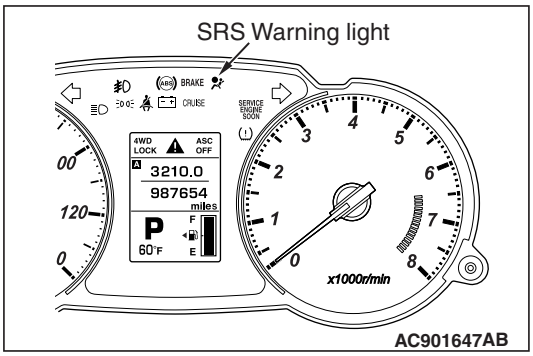

INSPECTION

M1524004700671

⚠ WARNING

If a dent, crack, deformation or rust is detected, replace with a new sensor.

NOTE: For checking of the side impact sensor other than described below, refer to the section concerning SRS diagnosis (Refer to P.52B-32).

1. Check the side impact sensor and bracket for dents, cracks or deformation.
2. Check the connector for damage, and terminals for deformation.
3. Check that there is no bending or corrosion in the center pillar.

CURTAIN AIR BAG MODULES

REMOVAL AND INSTALLATION

M1524013500556

⚠ WARNING

- ***Never attempt to disassemble or repair the curtain air bag modules. If faulty, replace it.***
- ***Do not drop the curtain air bag modules or allow contact with water, grease or oil. Replace it if a dent, crack, deformation or rust is detected.***
- ***Do not expose the curtain air bag modules to temperatures over 93 °C (200 °F).***
- ***Wear gloves and safety glasses when handling air bags that have already deployed.***
- ***Certain components of this vehicle, such as air bag modules, may contain perchlorate materials. Special handling may apply. For additional information, see www.dtsc.ca.gov/hazardouswaste/perchlorate.***
- ***An undeployed curtain air bag module should only be disposed of in accordance with the procedures (Refer to P.52B-465).***
- ***When removing and installing the front passenger seat, be sure to carry out accuracy check occupant classification sensor after the seat has been installed in the vehicle. (On-vehicle Service P.52B-435.)***

Pre-removal Operation
- Turn the ignition switch to the "LOCK" (OFF) position.

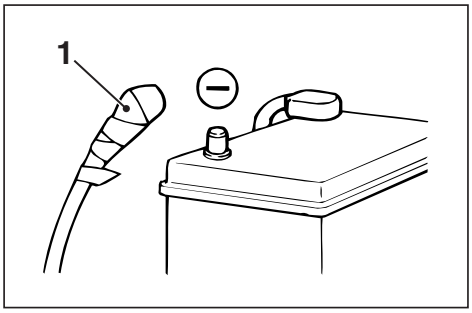

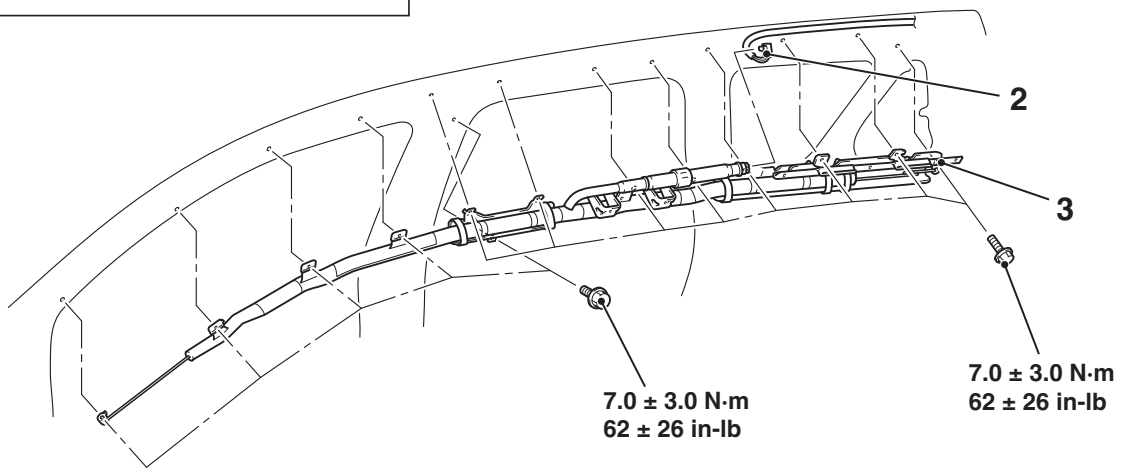

AC701974AC

Removal steps

<<A>> 1. Negative (-) battery cable connection
- Headlining (Refer to GROUP 52A, Headlining P.52A-15).

<<B>> 2. Curtain air bag module connector connection

<<C>> 3. Curtain air bag module

INSTALLATION STEPS

>>A<< • Pre-installation inspection

>>B<< 3. Curtain air bag module

>>C<< 2. Curtain air bag module connector connection
- Headlining (Refer to GROUP 52A, Headlining P.52A-15).

1. Negative (-) battery cable connection

>>D<< • Post-installation inspection

TSB Revision

REMOVAL SERVICE POINTS

<<A>> NEGATIVE (−) BATTERY CABLE DISCONNECTION

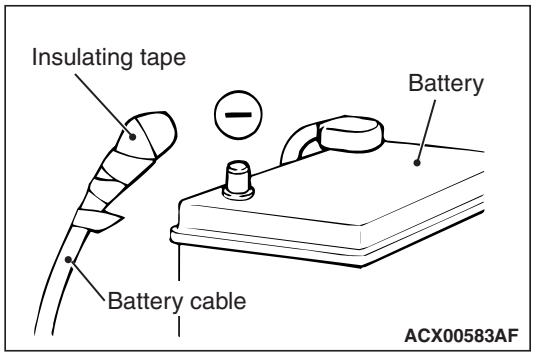

⚠ ***DANGER***

Wait at least 60 seconds after disconnecting the battery cable before doing any further work. (Refer to P.52B-24).

⚠ ***WARNING***

Battery posts, terminals and related accessories contain lead and lead compounds. WASH HANDS AFTER HANDLING.

Disconnect the negative (−) battery cable from the battery and tape the terminal to prevent accidental connection and seat belt pre-tensioner operation.

<<B>> CURTAIN AIR BAG MODULE CONNECTOR REMOVAL

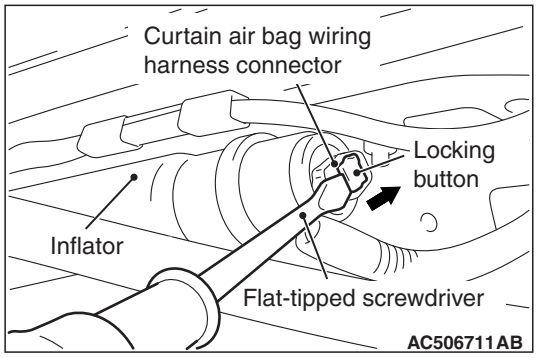

Use a flat-tipped screwdriver to unlock the locking button of the curtain air bag harness side connector. After releasing the lock, disconnect the connector.

<<C>> CURTAIN AIR BAG MODULE REMOVAL

⚠ ***WARNING***

- ***The air bag module must not be measured with such equipment as an ohmmeter.***
- ***The air bag module must not be disassembled.***
- ***The removed air bag module should be stored in a clean, dry place with the deployment surface facing up.***

INSTALLATION SERVICE POINTS

>>A<< PRE-INSTALLATION INSPECTION

⚠ ***WARNING***

Dispose of curtain air bag module only according to the specified procedure. (Refer to P.52B-24).

1. When installing the new curtain air bag module, refer to “INSPECTION” (P.52B-460).
2. Connect the negative (−) battery cable.

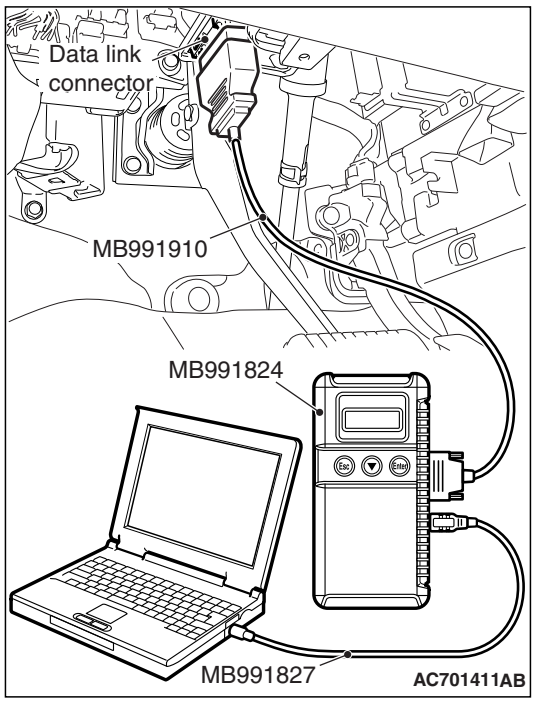

⚠ CAUTION

To prevent damage to scan tool MB991958, always turn the ignition switch to the "LOCK" (OFF) position before connecting or disconnecting scan tool MB991958.

3. Connect scan tool MB991958 to the data link connector.
4. Turn the ignition switch to the “ON” position.
5. Check DTCs using scan tool MB991958 to ensure entire SRS operates properly.
   At this time, check that no DTC except B1B1A and B1B2C are set.

⚠ DANGER

Wait at least 60 seconds after disconnecting the battery cable before doing any further work. (Refer to P.52B-24).

⚠ WARNING

Battery posts, terminals and related accessories contain lead and lead compounds. WASH HANDS AFTER HANDLING.

6. Turn the ignition switch to the "LOCK" (OFF) position. Disconnect the negative (-) battery cable and tape the terminal to prevent accidental connection and seat belt pre-tensioner operation.

>>B<< CURTAIN AIR BAG MODULE INSTALLATION

⚠ CAUTION

- **Take care not to bend or distort the curtain air bag when installing it.**
- **Take care that the surrounding components do not trap the air bag.**
- **Take care that the front pillar trim clips or other parts do not interfere with the strap.**

>>C<< CURTAIN AIR BAG MODULE CONNECTOR CONNECTION

Connect the curtain air bag module connector, then securely lock the locking button of the harness-side connector.

>>D<< POST-INSTALLATION INSPECTION

1. Connect the negative (-) battery cable.
2. Turn the ignition switch to the “ON” position.

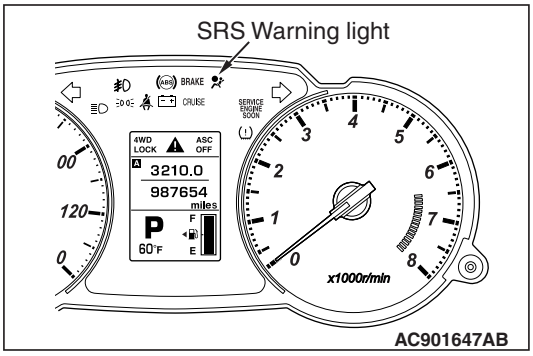

3. Does the "SRS" warning light illuminate for approximately seven seconds, and go out?
4. If yes, the SRS system is functioning properly. If not, refer to P.52B-32.

INSPECTION

M1524013600155

CURTAIN AIR BAG MODULE CHECK

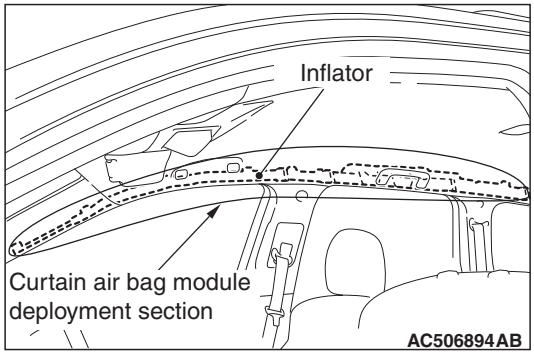

⚠ DANGER

Never attempt to measure the circuit resistance of the air bag modules (squib), even if you are using the specified tester. If the circuit resistance is measured with a tester, accidental air bag deployment will result, and possible serious personal injury.

⚠ WARNING

If any component damage is found during the following inspection, replace the air bag module with a new one. Dispose of the old one according to the specified procedure (Refer to P.52B-465).

1. Check that the curtain air bag deployment part of the headlining is normal.
2. Check the inflator surface for cracks, dents or deformations.
3. Check the air bag for breakage.
4. Check the connector for damage, the terminal for deformation and the harness for binding.

SEAT BELTS WITH PRE-TENSIONER

REMOVAL AND INSTALLATION

M1524004101490

⚠ ***WARNING***

- ***Never attempt to disassemble or repair the seat belt pre-tensioner. If faulty, replace it.***
- ***Be extremely careful when handling the seat with pre-tensioner. Do not subject it to shocks, drop it, bring it close to strong magnets or allow contact with water, grease or oil. Always replace it with a new part if any dents, cracks or deformation is found.***
- ***Do not place anything on the seat belt pre-tensioner.***
- ***Do not expose the seat belt pre-tensioner to temperatures over 90°C (194°F).***
- ***After operating the seat belt pre-tensioner, replace the seat belt pre-tensioner with a new part.***
- ***Gloves and protective goggles must be worn when handling a seat belt pre-tensioner once it has been used.***
- ***Certain components of this vehicle, such as seat belt pre-tensioners, may contain perchlorate materials. Special handling may apply. For additional information, see www.dtsc.ca.gov/hazardouswaste/perchlorate.***
- ***If disposing of a seat belt with pre-tensioner which has not yet been operated, its seat belt pre-tensioner must be operated first before disposal. (Refer to P.52B-465).***
- ***When removing and installing the front passenger seat belt, be sure to carry out accuracy check of the occupant classification sensor after the seat has been installed in the vehicle. (On-Vehicle Service P.52B-435.)***

Pre-removal Operation
- Turn the ignition key to the "LOCK" (OFF) position.

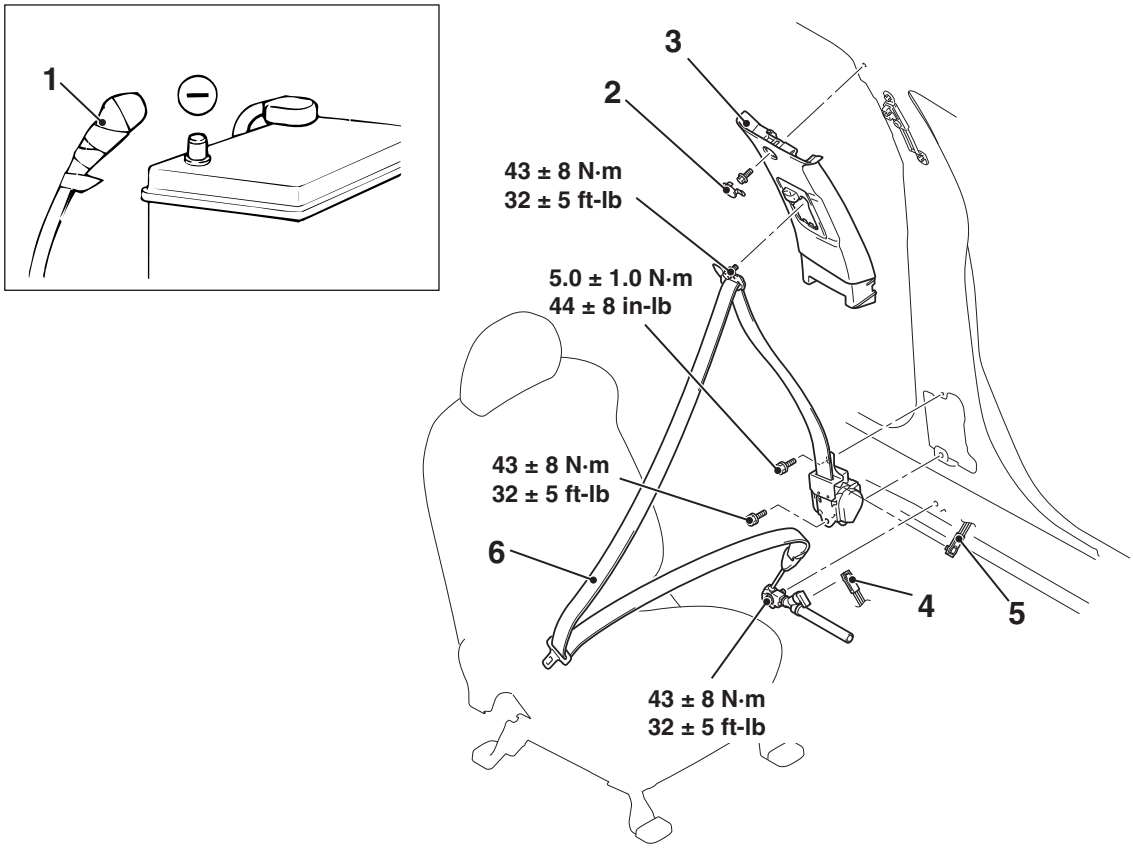

AC701975 AC

Removal steps

<<A>> 1. Negative (-) battery cable connection
- Front scuff plate, scuff plate rear, center pillar lower (Refer to GROUP 52A, Trims P.52A-9).

2. Center pillar trim upper cap
3. Center pillar trim upper (Refer to GROUP 52A, Interior Trim P.52A-9).

<<B>> 4. lap pre-tensioner connector connection <Driver's seat belt>

<<C>> 5. Seat belt pre-tensioner connector connection

<<D>> 6. Seat belt with pre-tensioner

Installation steps

>>A<< • Pre-installation inspection

6. Seat belt with pre-tensioner

>>B<< 5. Seat belt pre-tensioner connector connection

4. lap pre-tensioner connector <Driver's seat belt>
3. Center pillar trim upper (Refer to GROUP 52A, Interior Trim P.52A-9).
2. Center pillar trim upper cap
- Front scuff plate, scuff plate rear, center pillar lower (Refer to GROUP 52A, Trims P.52A-9).

1. Negative (-) battery cable connection

>>C<< • Post-installation inspection

Required Special Tools:
- MB991958: Scan Tool (M.U.T.-III Sub Assembly)
  - MB991824:Vehicle Communication Interface(V.C.I.)
  - MB991827:M.U.T.-III USB Cable
  - MB991910:M.U.T.-III Main Harness A

REMOVAL SERVICE POINTS

<<A>> NEGATIVE (-) BATTERY CABLE DISCONNECTION

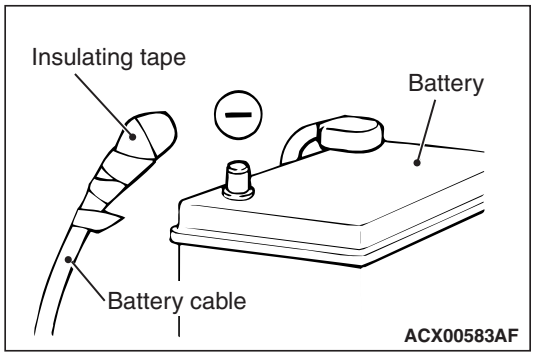

⚠ ***DANGER***

Wait at least 60 seconds after disconnecting the battery cable before doing any further work. (Refer to P.52B-24).

⚠ ***WARNING***

Battery posts, terminals and related accessories contain lead and lead compounds. WASH HANDS AFTER HANDLING.

Disconnect the negative (-) battery cable from the battery and tape the terminal to prevent accidental connection and seat belt pre-tensioner operation.

<<B>> LAP PRE-TENSIONER CONNECTOR DISCONNECTION

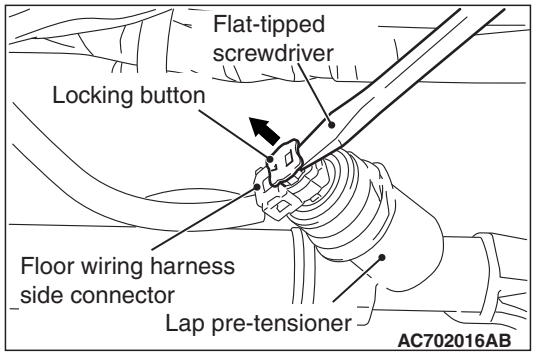

Use a flat-tipped screwdriver to unlock the locking button of the floor wiring harness side connector. After releasing the lock, disconnect the connector.

<<C>> SEAT BELT PRE-TENSIONER CONNECTOR DISCONNECTION

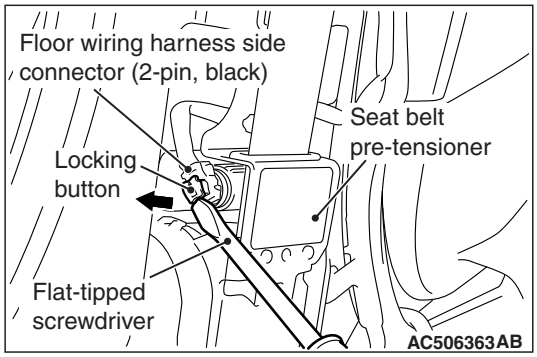

Use a flat-tipped screwdriver to unlock the locking button of the floor wiring harness side connector. After releasing the lock, disconnect the connector.

<<D>> SEAT BELT WITH PRE-TENSIONER REMOVAL

⚠ **CAUTION**

When discarding the seat belt with pre-tensioner, discard after operating the pre-tensioner as specified in the service procedure. (Refer to P.52B-465.)

INSTALLATION SERVICE POINTS

>>A<< PRE-INSTALLATION INSPECTION

⚠ WARNING

Dispose of seat belt pre-tensioner only according to the specified procedure. (Refer to P.52B-465).

1. When installing the new seat belt pre-tensioner, refer to “INSPECTION” (P.52B-465).
2. Connect the negative (-) battery cable.

⚠ CAUTION

To prevent damage to scan tool MB991958, always turn the ignition switch to the "LOCK" (OFF) position before connecting or disconnecting scan tool MB991958.

3. Connect scan tool MB991958 to the data link connector.
4. Turn the ignition switch to the “ON” position.
5. Check DTCs using scan tool MB991958 to ensure entire SRS operates properly.
   At this time, check that no DTC except B1C35, B1C3A and B1C49 are set.

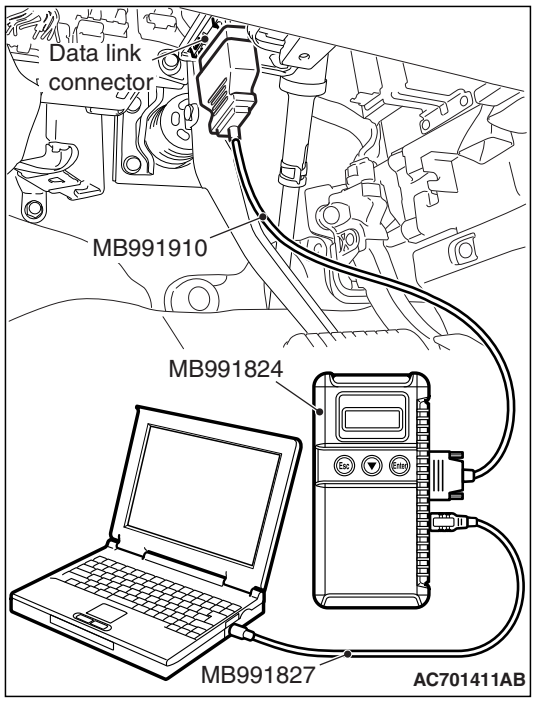

⚠ DANGER

Wait at least 60 seconds after disconnecting the battery cable before doing any further work. (Refer to P.52B-24).

⚠ WARNING

Battery posts, terminals and related accessories contain lead and lead compounds. WASH HANDS AFTER HANDLING.

6. Turn the ignition switch to the "LOCK" (OFF) position. Disconnect the negative (-) battery cable and tape the terminal to prevent accidental connection and seat belt pre-tensioner operation.

>>B<< PRE-TENSIONER CONNECTOR CONNECTION

Connect the pre-tensioner connector then securely lock the locking button of the harness-side connector.

>>C<< POST-INSTALLATION INSPECTION

1. Reconnect the negative (-) battery cable.
2. Turn the ignition switch to the “ON” position.
3. Does the "SRS" warning light illuminate for approximately seven seconds, and go out?
4. If yes, the SRS system is functioning properly. If not, refer to P.52B-32.

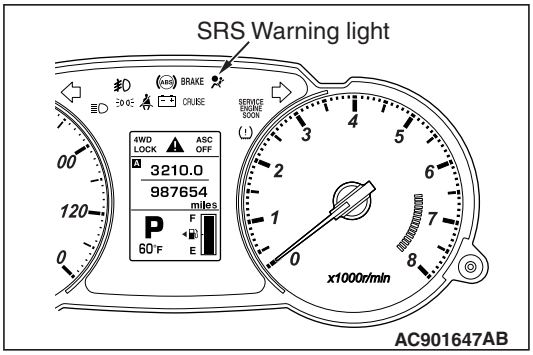

INSPECTION

M1524004200632

⚠ ***WARNING***

- ***If any component damage is found during the following inspection, replace the seat belt with pre-tensioner with a new one. Dispose of the old one according to the specified procedure (Refer to P.52B-465).***
- ***Never attempt to measure the circuit resistance of the seat belt pre-tensioner even if you are using the specified tester. If the circuit resistance is measured with a tester, accidental seat belt pre-tensioner operation will result in serious personal injury.***

1. Check seat belt pre-tensioner for dents, cracks or deformation.
2. Check the connectors for damage, the terminals for deformation, and the harness for binding.

AIR BAG MODULE AND SEAT BELT PRE-TENSIONER DISPOSAL PROCEDURES

M1524001201937

Before disposing of an air bag or a vehicle equipped with an air bag, follow the procedures below to deploy the air bag.

UNDEPLOYED AIR BAG MODULE DISPOSAL

Required Special Tools:

- MB992102: Air Bag Inflation Adapter Harness
- MB991885: Pre-tensioner Adapter Harness (For pre-tensioner)

⚠ ***WARNING***

- ***If the vehicle is to be scrapped or otherwise disposed of, deploy the air bags and operate the seat belt pre-tensioners inside the vehicle. If the vehicle will continue to be used and only the air bag modules and seat belt pre-tensioner are to be disposed of, deploy the air bags and operate the seat belt pre-tensioners outside the vehicle.***
- ***Since a large amount of smoke is produced when the air bag is deployed and the seat belt pre-tensioner is operated, avoid residential areas whenever possible.***
- ***Since there is a loud noise when the air bags are deployed and when the seat belt pre-tensioners are operated, avoid residential areas whenever possible. If anyone is nearby, give warning of the impending noise.***
- ***Suitable ear protection should be worn by personnel performing these procedures or by people in the immediate area.***

DEPLOYMENT INSIDE THE VEHICLE (WHEN DISPOSING OF A VEHICLE) <DRIVER'S AIR BAG MODULE>

1. Move the vehicle to an isolated spot.

⚠ DANGER

Wait at least 60 seconds after disconnecting the battery cables before doing any further work (Refer to P.52B-24).

⚠ WARNING

Battery posts, terminals and related accessories contain lead and lead compounds. WASH HANDS AFTER HANDLING.

2. Disconnect the negative (-) and positive (+) battery cables from the battery terminals, and then remove the battery from the vehicle.
3. Remove the cover (Refer to P.52B-443).
4. Slide the outer housing of the driver's air bag module connector in the arrow direction shown, and disconnect the connector.

   NOTE: When the driver's air bag module connector is disconnected from the inflator, the four pins of inflator connector are automatically shorted. This prevents the unintentional deployment of driver's air bags caused by the static or others.

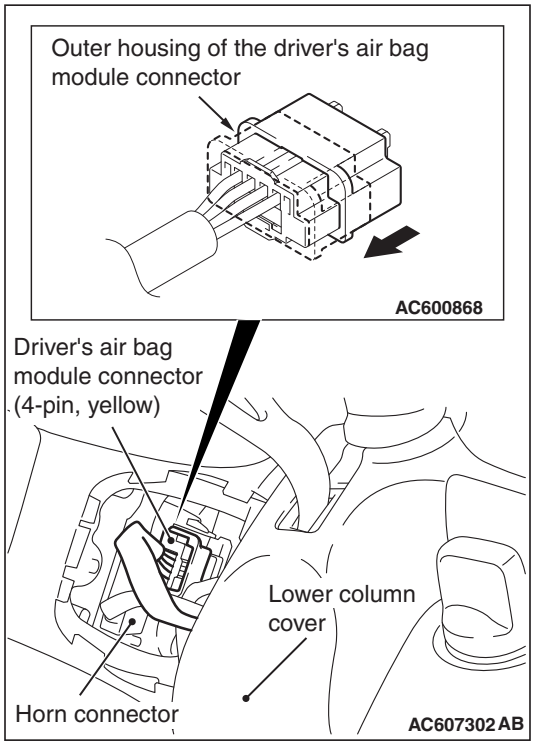

5. Connect deployment wires, each 6 meters (20 feet) or longer, to the two leads of special tool MB992102, and cover the connections with insulator tape. The other ends of the deployment wires should be connected to each other (short-circuited), to prevent sudden unexpected deployment of the air bag module.

   NOTE: This prevents the air bags from being unintentionally deployed because of the static and others.

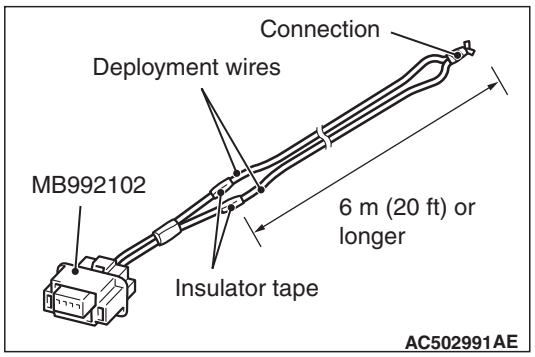

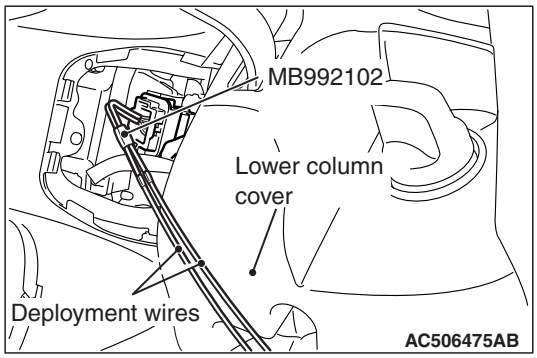

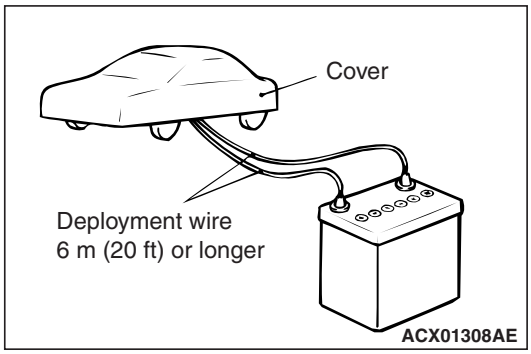

6. Connect the special tool MB992102 to the driver's air bag module, and then pull out the deployment wire to outside the vehicle.

⚠ WARNING

If the windshield glass is scratched, air bag deployment could cause it to crack and fly out of the vehicle, so always put a cover over the vehicle.

7. To suppress the sound as much as possible, completely close all door windows, close the doors and put a cover on the vehicle.

⚠ WARNING

- ***Before deploying the air bag in this manner, first check to be sure that there is no one in or near the vehicle. Wear safety glasses.***
- ***The inflator will be quite hot immediately following the deployment, so wait at least 30 minutes to allow it to cool before attempting to handle it. Although not poisonous, do not inhale gas from the air bag deployment. See Deployed Air Bag Module and Operated Seat Belt Pre-tensioner Disposal (Refer to P.52B-485) for post-deployment handling instructions.***
- ***If the air bag module fails to deploy, do not go near the module.***

8. At a location as far away from the vehicle as possible, disconnect the two connected wires from each other, and connect them to the two terminals of the battery (which has been removed from the vehicle) to deploy the air bag.
9. After deployment, dispose of the air bag module according to the Deployed Air Bag Module and Operated Seat Belt Pre-tensioner Disposal (Refer to P.52B-485).

DEPLOYMENT INSIDE THE VEHICLE (WHEN DISPOSING OF A VEHICLE) <PASSENGER'S (FRONT) AIR BAG MODULE >

1. Move the vehicle to an isolated spot.

⚠ DANGER

Wait at least 60 seconds after disconnecting the battery cables before doing any further work (Refer to P.52B-24).

⚠ WARNING

Battery posts, terminals and related accessories contain lead and lead compounds. WASH HANDS AFTER HANDLING.

2. Disconnect the negative (-) and positive (+) battery cables from the battery terminals, and then remove the battery from the vehicle.
3. Remove the glove box (Refer to GROUP 52A, Instrument Panel P.52A-2).
4. Slide the outer housing of passenger's (front) air bag module connector in the arrow direction shown, and disconnect the connector.

   NOTE: When the passenger's (front) air bag module connector is disconnected from the instrument panel wiring harness side connector, the four pins of inflator connector are automatically shorted. This prevents the unintentional deployment of front passenger's air bags caused by the static or others.

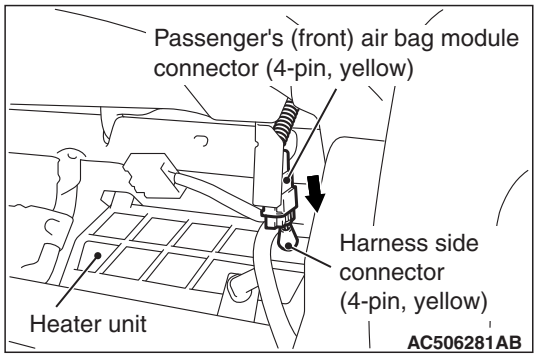

5. Connect deployment wires, each 6 meters (20 feet) or longer, to the two leads of SRS air bag adapter harness (MB9921020), and cover the connections with insulator tape. The other ends of the deployment wires should be connected to each other (short-circuited), to prevent sudden unexpected deployment of the air bag module.

   NOTE: This prevents the unintentional deployment of passenger's (front) air bags caused by the static or others.

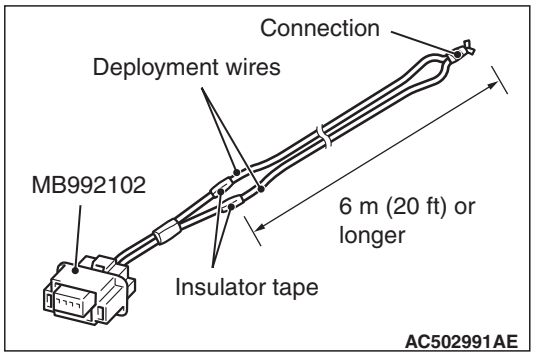

6. Connect the special tool MB992102 to the passenger's (front) air bag module, and then pull out the deployment wire to outside the vehicle.

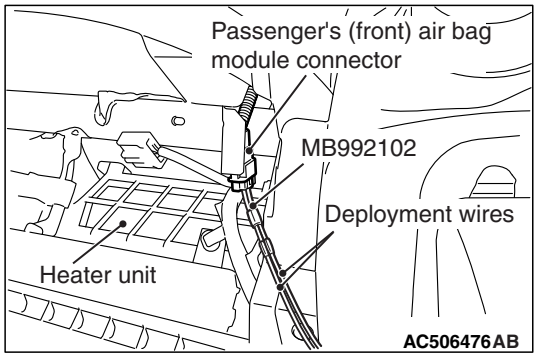

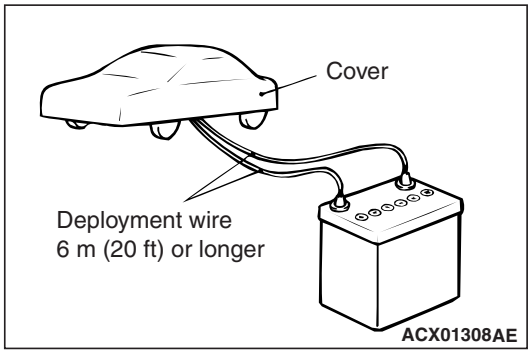

⚠ ***WARNING***

If the glass is scratched, air bag deployment could cause it to crack and fly out of the vehicle, so always put a cover over the vehicle.

7. To suppress the operation sound as much as possible, completely close all door windows, close the doors and put a cover on the vehicle.

⚠ ***WARNING***

- ***Before deploying the air bag in this manner, first check to be sure that there is no one in or near the vehicle. Wear safety glasses.***
- ***The inflator will be quite hot immediately following the deployment, so wait at least 30 minutes to allow it to cool before attempting to handle it. Although not poisonous, do not inhale gas from the air bag deployment. See Deployed Air Bag Module and Operated Seat Belt Pre-tensioner Disposal (Refer to P.52B-485) for post-deployment handling instructions.***
- ***If the air bag module fails to deploy, do not go near the module.***

8. At a location as far away from the vehicle as possible, disconnect the two connected wires from each other, and connect them to the two terminals of the battery (which has been removed from the vehicle) to deploy the air bag.
9. After deployment, dispose of the air bag module according to the Deployed Air Bag Module and Operated Seat Belt Pre-tensioner Disposal (Refer to P.52B-485).

DEPLOYMENT INSIDE THE VEHICLE (WHEN DISPOSING OF A VEHICLE) <SIDE-AIR BAG MODULE>

1. Move the vehicle to an isolated spot.

⚠ ***DANGER***

Wait at least 60 seconds after disconnecting the battery cables before doing any further work (Refer to P.52B-24).

⚠ ***WARNING***

Battery posts, terminals and related accessories contain lead and lead compounds. WASH HANDS AFTER HANDLING.

2. Disconnect the (–) and (+) terminals of battery cable, and then remove the battery from the vehicle.

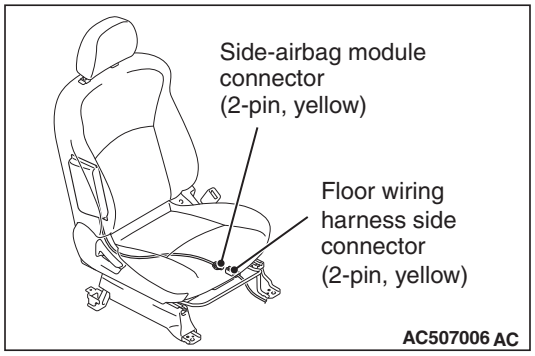

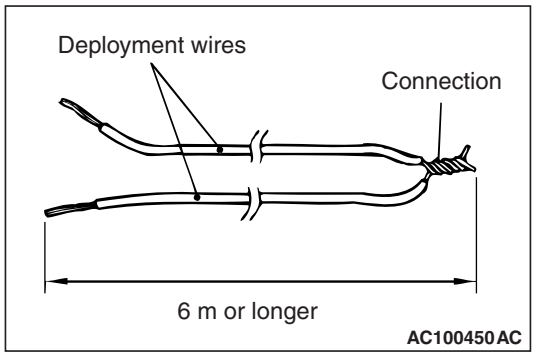

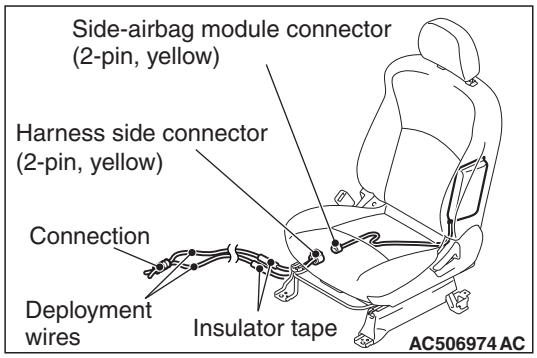

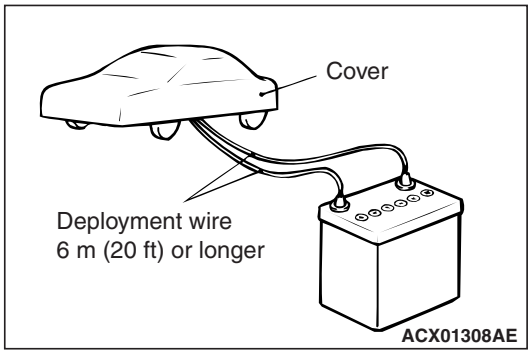

3. Disconnect the connections of the side-air bag module connector (two-pin: yellow) and the floor harness side connector (two-pin: yellow).

⚠ CAUTION

Make sure to deploy both driver's and front passenger's side air bags.

NOTE: When the side-air bag module connector is disconnected from the floor wiring harness side connector, the two pins of side air bag module connector are automatically shorted. This prevents the unintentional deployment of side-air bags caused by the static or others.

4. Obtain two suitable wires, which are 6 meters (20 feet) or longer, as deployment wires. Then connect the wires at one end to short.

   NOTE: This prevents the air bags from unintentional deployment caused by static electricity, etc.

⚠ CAUTION

Never fail to do Step 5 in order to prevent accidental deployment caused by static.

5. Touch the vehicle body with bare hands to release the charged static.
6. With the side-air bag module connector disconnected, cut the floor harness using a nipper or similar tools.
7. Connect the deployment wire to each of two cut wiring harnesses. After covering the connection areas with insulation tape, pull out the deployment wire to outside the vehicle.
8. Connect the floor harness, to which the deployment wire is connected, to the side-air bag module connector.

⚠ WARNING

If the glass is scratched, air bag deployment could cause it to crack and fly out of the vehicle, so always put a cover over the vehicle.

9. To suppress the operation sound as much as possible completely close all door windows, close the doors and put the cover on the vehicle.

⚠ ***WARNING***

- ***Before deploying the air bag in this manner, first check to be sure that there is no one in or near the vehicle. Wear safety glasses.***
- ***The inflator will be quite hot immediately following the deployment, so wait at least 30 minutes to allow it to cool before attempting to handle it. Although not poisonous, do not inhale gas from the air bag deployment. See Deployed Air Bag Module and Operated Seat Belt Pre-tensioner Disposal (Refer to P.52B-485) for post-deployment handling instructions.***
- ***If the air bag module fails to deploy, do not go near the module.***

10. At a location as far away from the vehicle as possible, disconnect the two connected wires from each other, and connect them to the two terminals of the battery (which has been removed from the vehicle) to deploy the air bag.
11. After deployment, dispose of the front seatback assembly (air bag module) according to the Deployed Air Bag Module and Operated Seat Belt Pre-tensioner Disposal (Refer to P.52B-485).

DEPLOYMENT INSIDE THE VEHICLE (WHEN DISPOSING OF A VEHICLE) <CURTAIN AIR BAG MODULE>

1. Move the vehicle to an isolated spot.

⚠ ***DANGER***

Wait at least 60 seconds after disconnecting the battery cables before doing any further work (Refer to P.52B-24).

⚠ ***WARNING***

Battery posts, terminals and related accessories contain lead and lead compounds. WASH HANDS AFTER HANDLING.

2. Disconnect the negative (-) and positive (+) battery cables from the battery terminals, and then remove the battery from the vehicle.
3. Remove the headlining (Refer to GROUP 52A, HEADLINING P.52A-15).

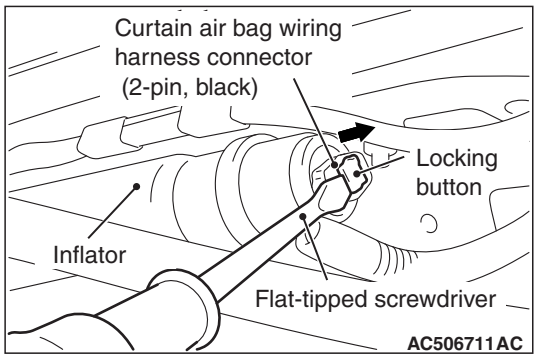

4. Use the flat-tipped screwdriver to pull out the locking button of curtain air bag harness side connector. After releasing the lock, disconnect the connector.

   NOTE: If the curtain air bag module connector is disconnected from the floor wiring harness side connector, both electrodes of the curtain air bag module connector will be automatically shorted to prevent unintended deployment of the curtain air bag module due to static electricity, etc.

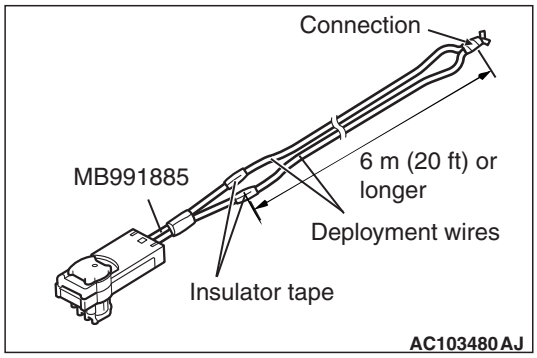

5. Connect deployment wires, each 6 meters (20 feet) or longer, to the two leads of special tool MB991885, and cover the connections with insulation tape. The other ends of the deployment wires should be connected to each other (short-circuited), to prevent sudden unexpected deployment of the curtain air bag module.

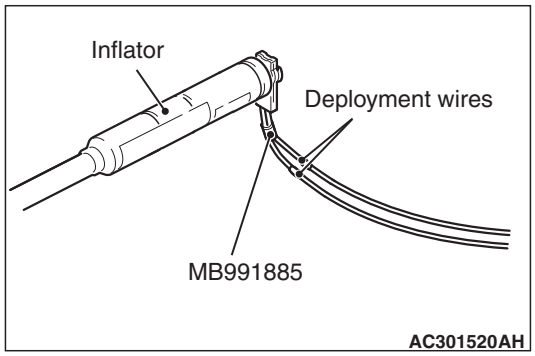

6. Connect the special tool MB991885 to the inflator, and then pull out the deployment wire to outside the vehicle.

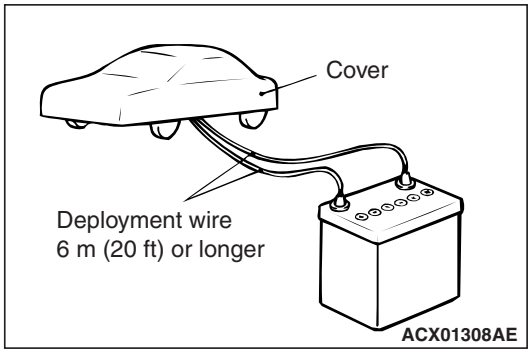

⚠ WARNING

If the glass is scratched, air bag deployment could cause it to crack and fly out of the vehicle, so always put a cover over the vehicle.

7. To suppress the deployment sound as much as possible, completely close all door windows, close the doors and put the cover on the vehicle.

⚠ ***WARNING***

- ***Before deploying the air bag in this manner, first check to be sure that there is no one in or near the vehicle. Wear safety glasses.***
- ***The inflator will be quite hot immediately following the deployment, so wait at least 30 minutes to allow it to cool before attempting to handle it. Although not poisonous, do not inhale gas from the air bag deployment. See Deployed Air Bag Module and Operated Seat Belt Pre-tensioner Disposal (Refer to P.52B-485) for post-operation handling instructions.***
- ***If the air bag module fails to deploy, do not go near the air bag module.***

8. At a location as far away from the vehicle as possible, disconnect the two connected wires from each the, and connect them to the two terminals of the battery (which has been removed from the vehicle) to deploy the air bag.
9. After deployment, dispose of the air bag module according to the Deployed Air Bag Module and Operated Seat belt Pre-tensioner Disposal (Refer to P.52B-485).

DEPLOYMENT INSIDE THE VEHICLE (WHEN DISPOSING OF A VEHICLE) <SEAT BELT PRE-TENSIONER>

1. Move the vehicle to an isolated spot.

⚠ ***DANGER***

Wait at least 60 seconds after disconnecting the battery cables before doing any further work (Refer to P.52B-24).

⚠ ***WARNING***

Battery posts, terminals and related accessories contain lead and lead compounds. WASH HANDS AFTER HANDLING.

2. Disconnect the negative (-) and positive (+) battery cables from the battery terminals, and then remove the battery from the vehicle.
3. Remove the center pillar trim, lower (Refer to GROUP 52A, Trims P.52A-9).
4. Use the slotted (-) screwdriver to pull out the locking button of floor harness side connector. After releasing the lock, disconnect the connector.

   NOTE: If the seat belt pre-tensioner connector is disconnected from the floor wiring harness side connector, both electrodes of the seat belt pre-tensioner connector will be automatically shorted to prevent unintended operation of the seat belt pre-tensioner due to static electricity, etc.

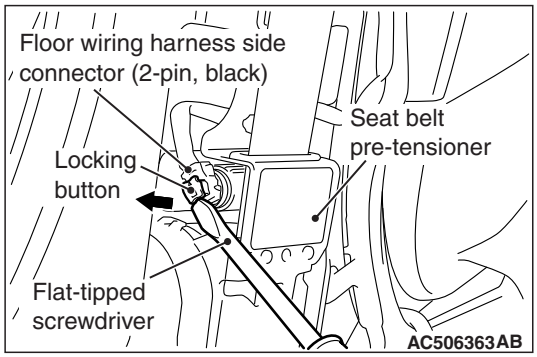

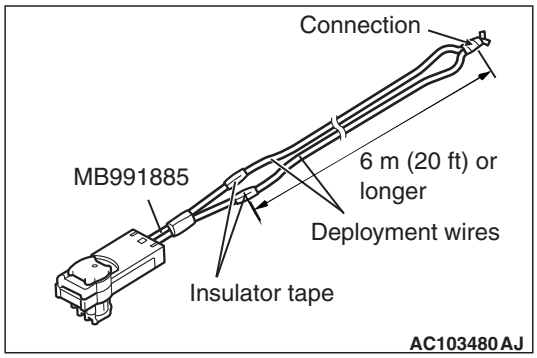

5. Connect deployment wires, each 6 meters (20 feet) or longer, to the two leads of special tool MB991885, and cover the connections with insulation tape. The other ends of the deployment wires should be connected to each other (short-circuited), to prevent sudden unexpected operation of the seat belt pre-tensioner.

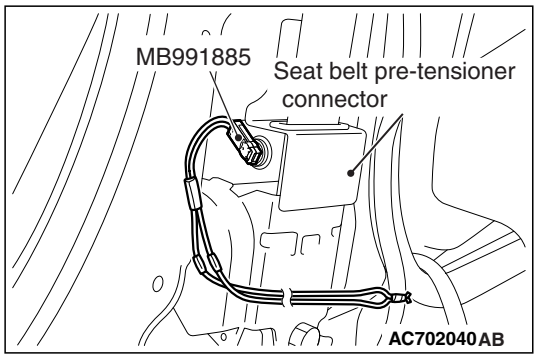

6. Connect the special tool MB991885 to the two-pin connector of seat belt pre-tensioner, and then pull out the deployment wire to outside the vehicle.
7. In order to suppress the operation sound as much as possible, fully close all the door windows and close the doors.

⚠ WARNING

- ***Before operating the seat belt pre-tensioner in this manner, first check to be sure that there is no one in or near the vehicle. Wear safety glasses.***
- ***The inflator will be quite hot immediately following the operation, so wait at least 30 minutes to allow it to cool before attempting to handle it. Although not poisonous, do not inhale gas from the seat belt pre-tensioner operation. See Deployed Air Bag Module and Operated Seat Belt Pre-tensioner Disposal (Refer to P.52B-485) for post-operation handling instructions.***
- ***If the seat belt pre-tensioner fails to operate, do not go near the seat belt pre-tensioner.***

8. At a location as far away from the vehicle as possible, disconnect the two connected wires from each the, and connect them to the two terminals of the battery (which has been removed from the vehicle) to operate the seat belt pre-tensioner.
9. After operation, dispose of the seat belt pre-tensioner according to the Deployed Air Bag Module operated Seat Belt Pre-tensioner Disposal (Refer to P.52B-485).

DEPLOYMENT INSIDE THE VEHICLE (WHEN DISPOSING OF A VEHICLE) <LAP PRE-TENSIONER>

1. Move the vehicle to an isolated spot.

⚠ DANGER

Wait at least 60 seconds after disconnecting the battery cables before doing any further work (Refer to P.52B-24).

⚠ WARNING

Battery posts, terminals and related accessories contain lead and lead compounds. WASH HANDS AFTER HANDLING.

2. Disconnect the negative (-) and positive (+) battery cables from the battery terminals, and then remove the battery from the vehicle.
3. Remove the center pillar trim lower cover (Refer to GROUP 52A, Trims P.52A-9).
4. Use the slotted (-) screwdriver to pull out the locking button of floor wiring harness side connector. After releasing the lock, disconnect the connector.

   NOTE: If the lap pre-tensioner connector is disconnected from the floor wiring harness side connector, both electrodes of the lap pre-tensioner connector will be automatically shorted to prevent unintended operation of the lap pre-tensioner due to static electricity, etc.

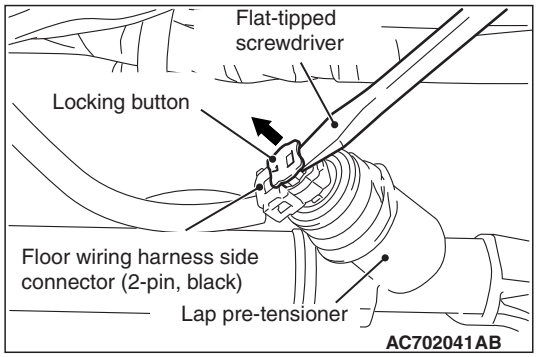

5. Connect deployment wires, each 6 meters (20 feet) or longer, to the two leads of special tool MB991885, and cover the connections with insulation tape. The other ends of the deployment wires should be connected to each other (short-circuited), to prevent sudden unexpected operation of the lap pre-tensioner.

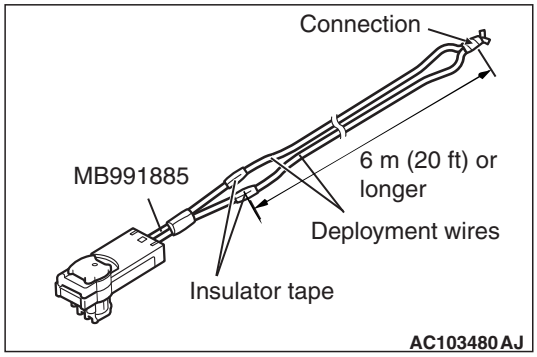

6. Connect the special tool MB991885 to the two-pin connector of lap pre-tensioner, and then pull out the deployment wire to outside the vehicle.
7. In order to suppress the operation sound as much as possible, fully close all the door windows and close the doors.

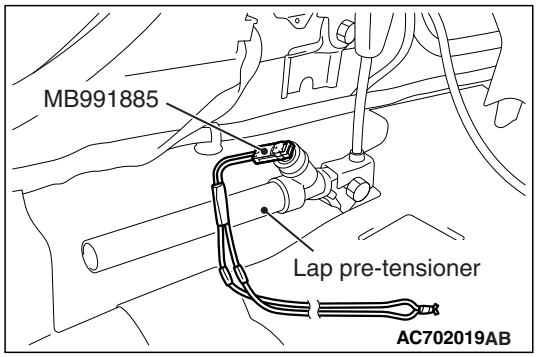

DEPLOYMENT OUTSIDE THE VEHICLE <DRIVER'S AIR BAG MODULE>

⚠ ***DANGER***

Wait at least 60 seconds after disconnecting the battery cables before doing any further work (Refer to P.52B-24).

⚠ ***WARNING***

- ***Battery posts, terminals and related accessories contain lead and lead compounds. WASH HANDS AFTER HANDLING.***
- ***Deploy the air bag in a wide, flat area at least 6 meters (20 feet) away from obstacles and other people.***
- ***Do not perform deployment outside if a strong wind is blowing. If there is a slight breeze, place the air bag module downwind from the battery.***

1. Disconnect the negative (-) and positive (+) battery cables from the battery terminals, and then remove the battery from the vehicle.

⚠ **CAUTION**

Once disconnected, both electrodes of the driver's air bag module connector short automatically to prevent accidental deployment caused by static etc. Still, in consideration of the accidental deployment, store the air bag module on a flat place with deployment surface facing up. Do not put anything on it.

2. Remove the air bag module from the vehicle (Refer P.52B-443
3. Connect deployment wires, each 6 meters (20 feet) or longer, to the two leads of special tool MB992102, and cover the connections with insulator tape. The other ends of the deployment wires should be connected to each other (short-circuited), to prevent sudden unexpected deployment of the air bag module.

   NOTE: This prevents the air bags from being unintentionally deployed because of the static and others.
4. Connect the special tool MB992102 to the driver's air bag module.
5. To the torx screw installation hole located at the backside of air bag module, tie a thick wire for fixing the wheel.
6. Route the deployment wires connected to the driver's air bag module beneath an old tire and wheel assembly. Then, using the wire tied to the bolt, secure the driver's air bag module to the tire and wheel assembly with the deployment surface facing up.

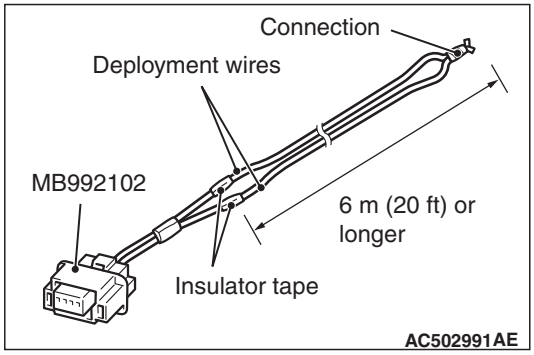

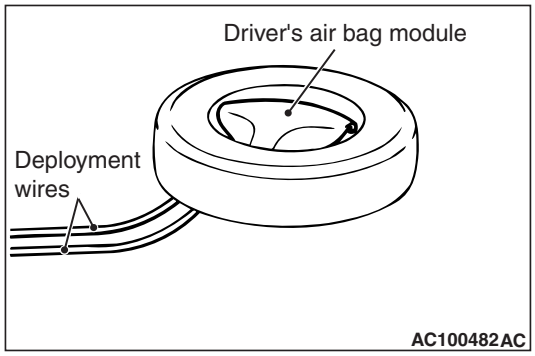

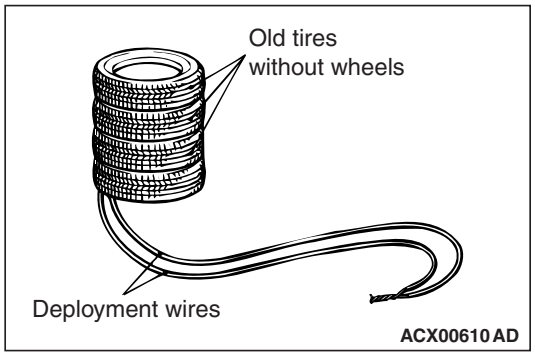

7. Place three old tires without wheels on the tire secured with the driver's air bag module.

⚠ ***WARNING***

- ***Before deployment, check carefully to be sure that no one is nearby.***
- ***The inflator will be quite hot immediately following the deployment, so wait at least 30 minutes to allow it to cool before attempting to handle it. Although not poisonous, do not inhale gas from air bag deployment. See Deployed Air Bag Module and Operated Seat Belt Pre-tensioner Disposal (Refer to P.52B-485) for post-deployment handling instructions.***
- ***If the air bag fails to deploy, do not go near the module.***

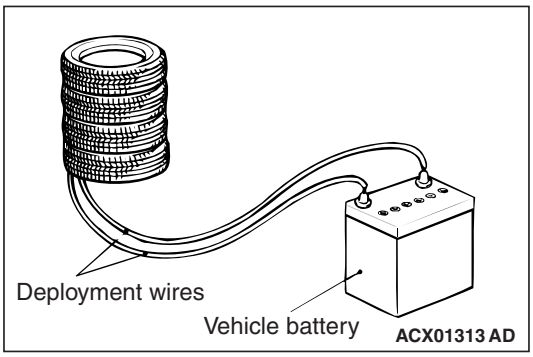

8. At a location as far away from the air bag module as possible, and from a shielded position, disconnect the two connected wires from each other, and connect them, to the two terminals of the battery (which has been removed from the vehicle) to deploy the air bag.
9. Discard the deployed air bag module as specified in Deployed Air Bag Module and Operated Seat Belt Pre-tensioner Disposal (Refer to P.52B-485).

DEPLOYMENT OUTSIDE THE VEHICLE <PASSENGER'S (FRONT) AIR BAG MODULE>

⚠ DANGER

Wait at least 60 seconds after disconnecting the battery cables before doing any further work (Refer to P.52B-24).

⚠ WARNING

- ***Battery posts, terminals and related accessories contain lead and lead compounds. WASH HANDS AFTER HANDLING.***
- ***Deploy the air bag in a wide, flat area at least 6 meters (20 feet) away from obstacles and other people.***
- ***Do not perform deployment outside if a strong wind is blowing. If there is a slight breeze, place the air bag module downwind from the battery.***

1. Disconnect the negative (-) and positive (+) battery cables from the battery terminals, and then remove the battery from the vehicle.

⚠ CAUTION

Once disconnected, both electrodes of the front passenger's air bag module connector short automatically to prevent accidental deployment caused by static etc. Still, in consideration of possible accidental deployment, store the air bag module on flat place with deployment surface facing up. Do not put anything on it.

2. Remove the air bag module from the vehicle (Refer to P.52B-443).
3. Connect deployment wires, each 6 meters (20 feet) or longer, to the two leads of special tool MB992102, and cover the connections with insulator tape. The other ends of the deployment wires should be connected to each other (short-circuited), to prevent sudden unexpected deployment of the air bag module.

   NOTE: This prevents the air bags from being unintentionally deployed because of the static and others.
4. Connect the special tool MB992102 to the passenger's (front) air bag module.
5. Pass the thick wire through the hole of air bag module mounting bracket. When, with the air bag module deployment surface facing upward, fit the module to the old tire with wheel.

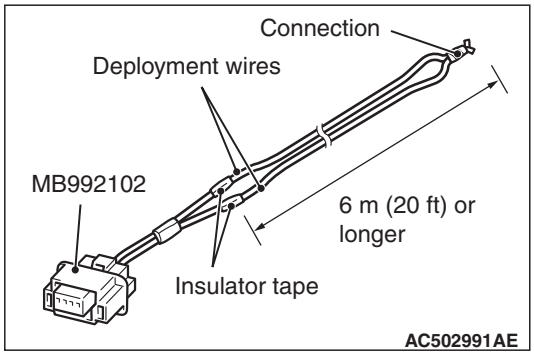

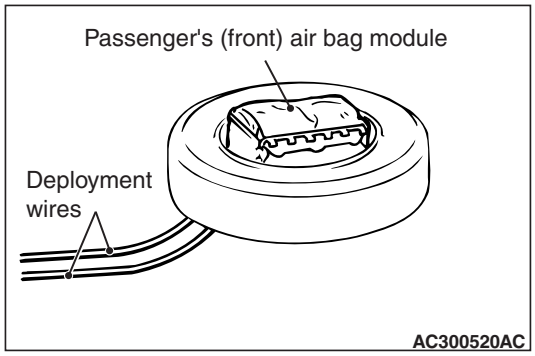

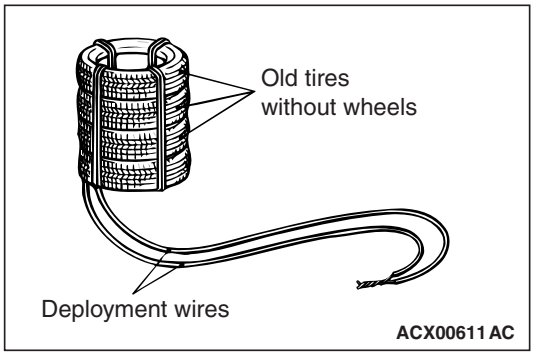

6. Place three old tires without wheels on top of the tire secured to the air bag module, and secure all tires together with ropes (four locations).

⚠ WARNING

- ***Before deployment, check carefully to be sure that no one is nearby.***
- ***The inflator will be quite hot immediately following the deployment, so wait at least 30 minutes to allow it to cool before attempting to handle it. Although not poisonous, do not inhale gas from air bag deployment. See Deployed Air Bag Module and Operated Seat Belt Pre-tensioner Disposal (Refer to P.52B-485) for post-deployment handling instructions.***
- ***If the air bag fails to deploy, do not go near the module.***

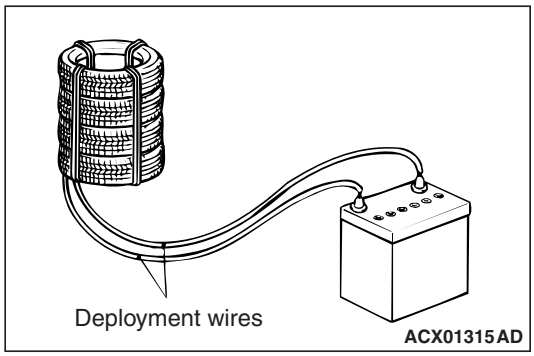

7. At a location as far away from the air bag module as possible, and from a shielded position, disconnect the two connected wires from each other, and connect them to the two terminals of the battery (which has been removed from the vehicle) to deploy the air bag.
8. Discard the deployed air bag module as specified in Deployed Air Bag Module and Operated Seat Belt Pre-tensioner Disposal (Refer to P.52B-485).

DEPLOYMENT OUTSIDE VEHICLE< SIDE-AIR BAG MODULE>

⚠ DANGER

Wait at least 60 seconds after disconnecting the battery cables before doing any further work (Refer to P.52B-24).

⚠ WARNING

- ***Battery posts, terminals and related accessories contain lead and lead compounds. WASH HANDS AFTER HANDLING.***
- ***Deploy the air bag in a wide, flat area at least 6 meters (20 feet) away from obstacles and other people.***
- ***Do not perform deployment outside if a strong wind is blowing. If there is a slight breeze, place the air bag module downwind from the battery.***

1. Disconnect the negative (-) and positive (+) battery cables from the battery terminals, and then remove the battery from the vehicle.

⚠ CAUTION

Once disconnected, both electrodes of the side-air bag module connector short automatically to prevent accidental deployment caused by static etc. Still, in consideration of the accidental deployment, store the air bag module on flat place with deployment surface facing up. Also, do not put anything on it.

2. Remove the side-air bag module from the front seat assembly incorporated in the side-air bag. (Refer to GROUP 52A-FRONT SEAT ASSEMBLY P.52A-17.)
3. Obtain two suitable wires, which are 6 meters (20 feet) or longer, as deployment wires. Then connect the wires at one end to short.

   NOTE: This prevents the air bags from unintentional deployment caused by static electricity, etc.

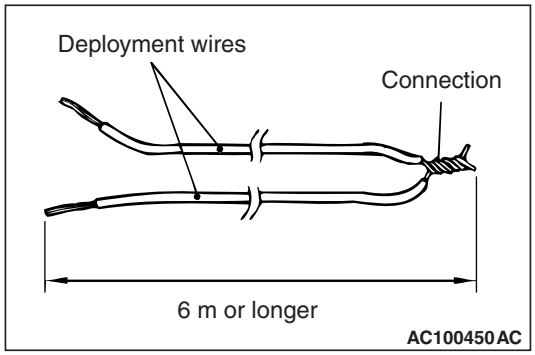

⚠ CAUTION

Never fail to do Step 4 in order to prevent accidental deployment caused by static.

4. Touch the vehicle body with bare hands to release the charged static.
5. Cut off the side-air bag module wiring harness connector from the wiring harness with nippers. Connect the deployment wire to each of the two cut wiring harnesses, and cover the connection areas with insulation tape.

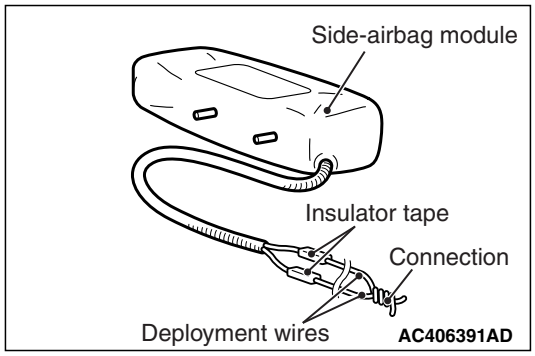

6. Pass the deployment wire under the tire with wheel, and connect it to the side-air bag module connector.
7. Install a surplus nut to the side-air bag module bolt. Then, tie a thick wire for fixing the wheel to the bolt. Fix the side-air bag module to the wheel of old tire with the module deployment surface facing upward.

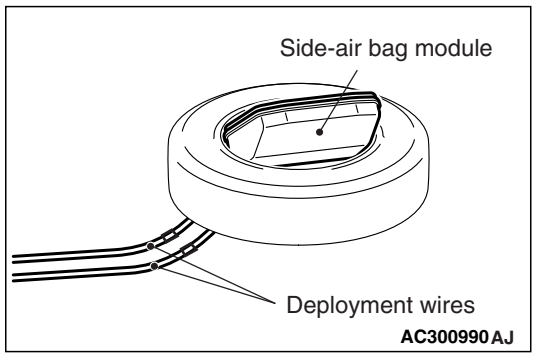

8. Place three old tires without wheels on top of the tire secured to the air bag module, and secure all tires together with ropes (four locations).

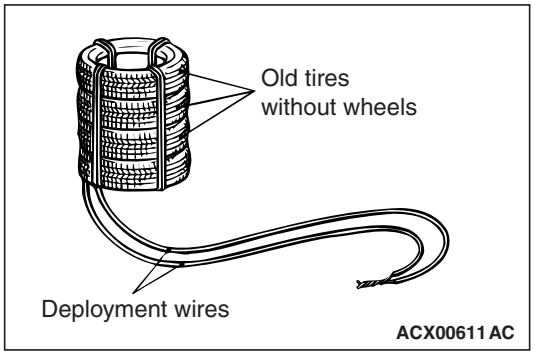

⚠ ***WARNING***

- ***Before deployment, check carefully to be sure that no one is nearby.***
- ***The inflator will be quite hot immediately following the deployment, so wait at least 30 minutes to allow it to cool before attempting to handle it. Although not poisonous, do not inhale gas from air bag deployment. See Deployed Air Bag Module and Operated Seat Belt Pre-tensioner Disposal (Refer to P.52B-485) for post-deployment handling instructions.***
- ***If the air bag fails to deploy, do not go near the module.***

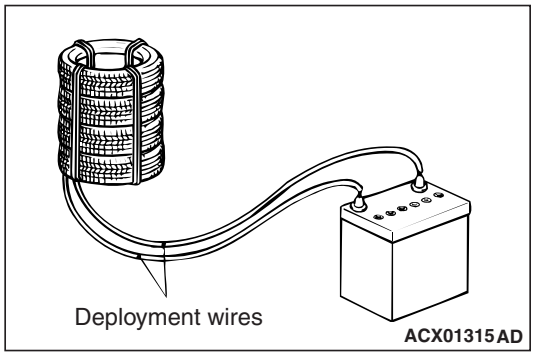

9. At a location as far away from the air bag module as possible, and from a shielded position, disconnect the two connected wires from each other, and connect them to the two terminals of the battery (which has been removed from the vehicle) to deploy the air bag.
10. Discard the deployed air bag module as specified in Deployed Air Bag Module and Operated Seat Belt Pre-tensioner Disposal (Refer to P.52B-485).

DEPLOYMENT OUTSIDE THE VEHICLE <CURTAIN AIR BAG MODULE>

⚠ ***DANGER***

Wait at least 60 seconds after disconnecting the battery cables before doing any further work (Refer to P.52B-24).

⚠ ***WARNING***

- ***Battery posts, terminals and related accessories contain lead and lead compounds. WASH HANDS AFTER HANDLING.***
- ***Deploy the air bag in a wide, flat area at least 6 meters (20 feet) away from obstacles and other people.***
- ***Do not perform deployment outside if a strong wind is blowing. If there is a slight breeze, place the air bag module downwind from the battery.***

1. Disconnect the negative (-) and positive (+) battery cables from the battery terminals, and then remove the battery from the vehicle.

⚠ ***WARNING***

Store the curtain air bag module on a flat surface with its operation surface facing up. Do not place anything on top of them.

2. Remove the curtain air bag module from the vehicle (Refer to P.52B-457).

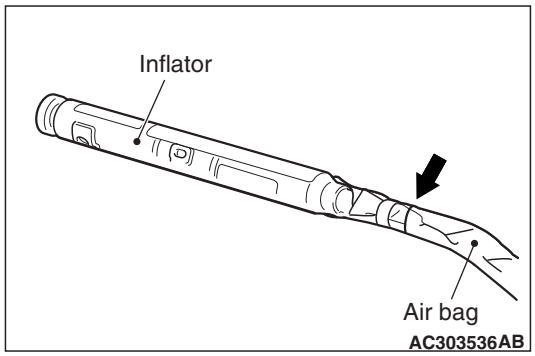

3. Cut the inflator from the air bag as shown in the figure using a cutter or a similar tool.

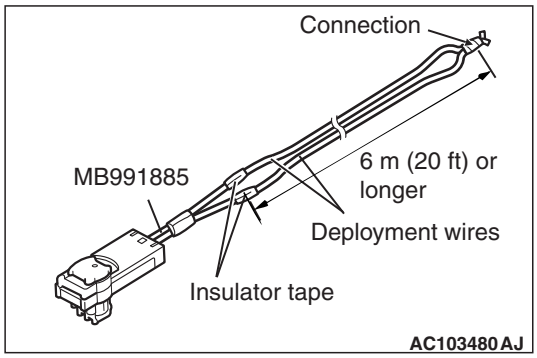

4. Connect deployment wires, each 6 meters (20 feet) or longer, to the two leads of special tool MB991885, and cover the connections with insulation tape. The other ends of the deployment wires should be connected to each other (short-circuited), to prevent sudden unexpected deployment of the air bag module.

   NOTE: This prevents the air bags from being unintentionally deployed because of the static and others.

5. Connect the special tool MB991885 to the curtain air bag module.

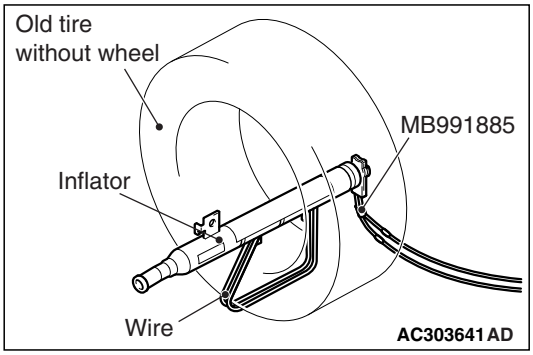

6. Feed a thick wire through the bracket of the inflator, and connect it to an old tire without a wheel.

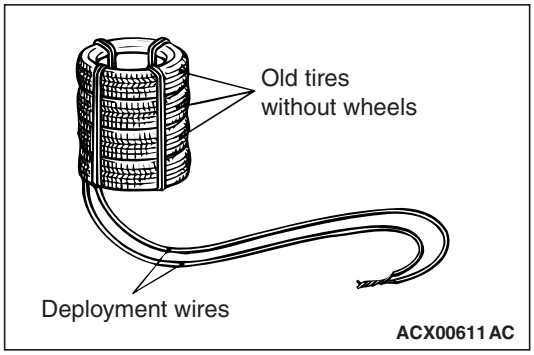

7. Place the tire to which the inflator is fixed onto the two stacked tires. Then, place 1 or more old tires without wheel onto the stacked tires, and tie and fix all the tires with rope. (4 positions)

⚠ ***WARNING***

- ***Before operation, check carefully to be sure that no one is nearby.***
- ***The inflator will be quite hot immediately following the deployment, so wait at least 30 minutes to allow it to cool before attempting to handle it. Although not poisonous, do not inhale gas from air bag deployment. See Deployed Air Bag Module and Operated Seat Belt Pre-tensioner Disposal (Refer to P.52B-485) for post-operation handling instructions.***
- ***If the air bag fails to deploy, do not go near the module.***

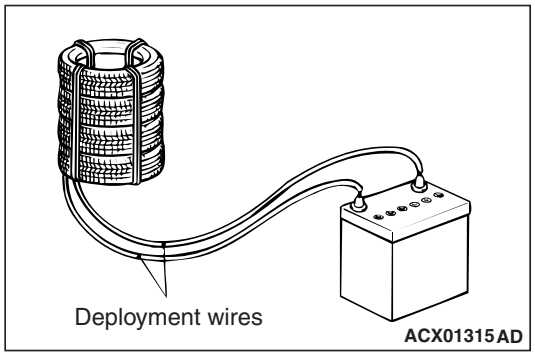

8. At a location as far away from the air bag module as possible, and from a shielded position, disconnect the two connected wires from each other, and connect them to the two terminals of the battery (which has been removed from the vehicle) to deploy the air bag.
9. Discard the deployed air bag module as specified in Deployed Air Bag Module and Seat Belt Pre-tensioner Disposal (Refer to P.52B-485).

DEPLOYMENT OUTSIDE THE VEHICLE <SEAT BELT PRE-TENSIONER AND LAP PRE-TENSIONER>

⚠ ***DANGER***

Wait at least 60 seconds after disconnecting the battery cables before doing any further work (Refer to P.52B-24).

⚠ ***WARNING***

- ***Battery posts, terminals and related accessories contain lead and lead compounds. WASH HANDS AFTER HANDLING.***
- ***Operate the seat belt pre-tensioner in a wide, flat area at least 6 meters (20 feet) away from obstacles and other people.***
- ***Do not perform operation outside if a strong wind is blowing. If there is a slight breeze, place the seat belt pre-tensioner downwind from the battery.***

1. Disconnect the negative (-) and positive (+) battery cables from the battery terminals, and then remove the battery from the vehicle.

⚠ ***WARNING***

Store the seat belt pre-tensioner on a flat surface with its operation surface facing up. Do not place anything on top of them.

2. Remove the seat belt pre-tensioner from the vehicle (Refer to P.52B-461).

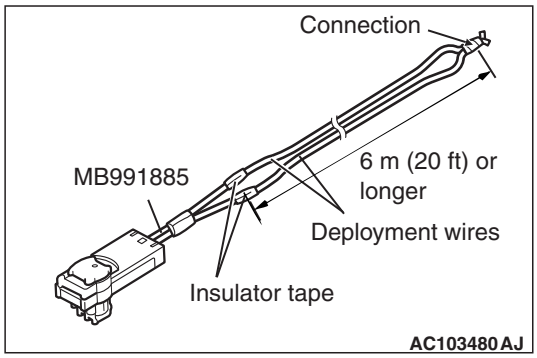

3. Connect deployment wires, each 6 meters (20 feet) or longer, to the two leads of special tool MB991885, and cover the connections with insulation tape. The other ends of the deployment wires should be connected to each other (short-circuited), to prevent sudden unexpected operation of the seat belt pre-tensioner.

   NOTE: This prevents the unintentional activation of inflator caused by the static or others.
4. Connect the special tool MB991885, which the deployment wires is attached to, to the seat belt pre-tensioner connector. <Seat belt pre-tensioner>
5. Connect the special tool MB991885, which the deployment wires is attached to, to the lap pre-tensioner connector. <Lap pre-tensioner>

⚠ CAUTION

The adapter harness below the wheel should be loose. If it is too tight, the reaction when the seat belt pre-tensioner operates could damage the adapter harness.

6. Pass the thick wires through the hole on the seat belt pre-tensioner bracket and secure them to the front (raised part) of the wheel in two places.
7. Pull the seat belt out to the outside of the tire, and then place one tire without a wheel on top.

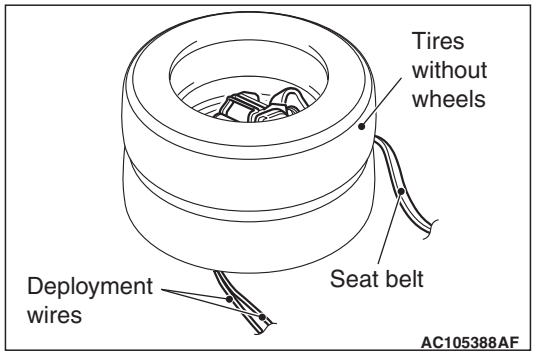

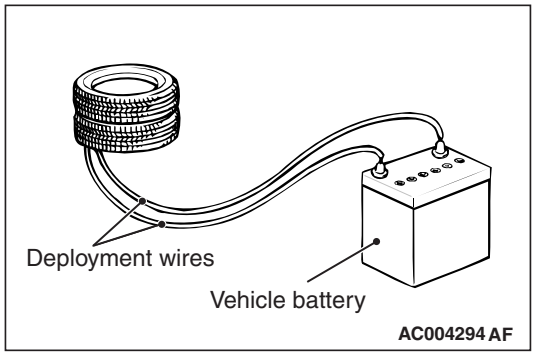

⚠ WARNING

- ***Before operation, check carefully to be sure that no one is nearby.***
- ***The inflator will be quite hot immediately following the operation, so wait at least 30 minutes to allow it to cool before attempting to handle it. Although not poisonous, do not inhale gas from seat belt pre-tensioner operation. See Deployed Air Bag Module and Operated Seat Belt pre-tensioner Disposal (Refer to P.52B-485) for post-operation handling instructions.***
- ***If the seat belt pre-tensioner fails to operate, do not go near the seat belt pre-tensioner.***

8. At a location as far away from the air bag module as possible, and from a shielded position, disconnect the two connected wires from each other, and connect them to the two terminals of the battery (which has been removed from the vehicle) to operate the seat belt pre-tensioner.
9. Discard the operated seat belt pre-tensioner as specified in Deployed Air Bag Module and Seat Belt pre-tensioner Disposal (Refer to P.52B-485).

DEPLOYED AIR BAG MODULE AND OPERATED SEAT BELT PRE-TENSIONER DISPOSAL

After deployment and operation, the air bag module and seat belt pre-tensioner should be disposed of in the same manner as any other scrap parts, adhering to local laws and/or legislation. Observe the following precautions during air bag or seat belt pre-tensioner disposal:

1. The inflator will be quite hot immediately following deployment, so wait at least 30 minutes to allow it cool before attempting to handle it.
2. Do not put water or oil on the air bag after deployment or on the seat belt pre-tensioner after operation.

⚠ WARNING

If after following these precautions, any material does get into the eyes or on the skin, immediately rinse the affected area with a large amount of clean water. If any irritation develops, seek medical attention.

3. There may be material on the deployed air bag module or the operated seat belt pre-tensioner, that could irritate the eye and/or skin. Wear gloves and safety glasses when handling a deployed air bag module or the operated seat belt pre-tensioner.
4. Tightly seal the air bag module and seat belt pre-tensioner in a strong plastic bag for disposal.
5. Be sure to always wash your hands after completing this operation.

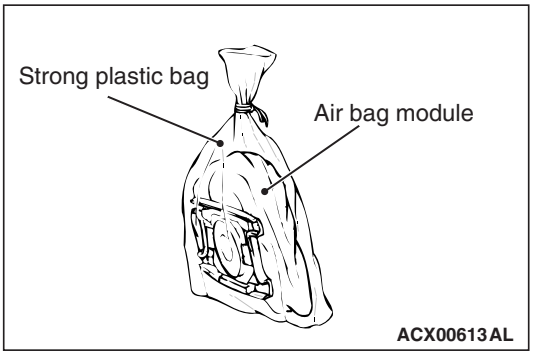

NOTES